ENVIRONMENTAL PROTECTION AGENCY

40 CFR Parts 60 and 63

[EPA–HQ–OAR–2010–0682; FRL–9720–4]

RIN 2060–AQ75

Petroleum Refinery Sector Risk and Technology Review and New Source Performance Standards

AGENCY: Environmental Protection Agency.

ACTION: Proposed rule.

SUMMARY: This action proposes amendments to the national emission standards for hazardous air pollutants for petroleum refineries to address the risk remaining after application of the standards promulgated in 1995 and 2002. This action also proposes amendments to the national emission standards for hazardous air pollutants for petroleum refineries based on the results of the Environmental Protection Agency (EPA) review of developments in practices, processes and control technologies and includes new monitoring, recordkeeping and reporting requirements. The EPA is also proposing new requirements related to emissions during periods of startup, shutdown and malfunction to ensure that the standards are consistent with court opinions issued since promulgation of the standards. This action also proposes technical corrections and clarifications for new source performance standards for petroleum refineries to improve consistency and clarity and address issues raised after the 2008 rule promulgation. Implementation of this proposed rule will result in projected reductions of 1,760 tons per year (tpy) of hazardous air pollutants (HAP), which will reduce cancer risk and chronic health effects.

DATES:

Comments. Comments must be received on or before August 29, 2014. A copy of comments on the information collection provisions should be submitted to the Office of Management and Budget (OMB) on or before July 30, 2014.

Public Hearing. The EPA will hold public hearings on this proposed rule on July 16, 2014, at Banning's Landing Community Center, 100 E. Water Street, Wilmington, California 90744, and on August 5, 2014, at the Alvin D. Baggett Recreation Building 1302 Keene Street in Galena Park, Texas, 77547.

ADDRESSES:

Comments. Submit your comments, identified by Docket ID Number EPA–HQ–OAR–2010–0682, by one of the following methods:

- *http://www.regulations.gov:* Follow the on-line instructions for submitting comments.
- *Email: a-and-r-docket@epa.gov.* Attention Docket ID Number EPA–HQ–OAR–2010–0682.
- *Fax:* (202) 566–9744. Attention Docket ID Number EPA–HQ–OAR–2010–0682.
- *Mail:* U.S. Postal Service, send comments to: EPA Docket Center, William Jefferson Clinton (WJC) West Building (Air Docket), Attention Docket ID Number EPA–HQ–OAR–2010–0682, U.S. Environmental Protection Agency, Mailcode: 28221T, 1200 Pennsylvania Ave. NW., Washington, DC 20460. Please include a total of two copies. In addition, please mail a copy of your comments on the information collection provisions to the Office of Information and Regulatory Affairs, Office of Management and Budget (OMB), Attn: Desk Officer for EPA, 725 17th Street NW., Washington, DC 20503.
- *Hand Delivery:* U.S. Environmental Protection Agency, WJC West Building (Air Docket), Room 3334, 1301 Constitution Ave. NW., Washington, DC 20004. Attention Docket ID Number EPA–HQ–OAR–2010–0682. Such deliveries are only accepted during the Docket's normal hours of operation, and special arrangements should be made for deliveries of boxed information.

Instructions. Direct your comments to Docket ID Number EPA–HQ–OAR–2010–0682. The EPA's policy is that all comments received will be included in the public docket without change and may be made available online at *http://www.regulations.gov,* including any personal information provided, unless the comment includes information claimed to be confidential business information (CBI) or other information whose disclosure is restricted by statute. Do not submit information that you consider to be CBI or otherwise protected through *http://www.regulations.gov* or email. The *http://www.regulations.gov* Web site is an ''anonymous access'' system, which means the EPA will not know your identity or contact information unless you provide it in the body of your comment. If you send an email comment directly to the EPA without going through *http://www.regulations.gov,* your email address will be automatically captured and included as part of the comment that is placed in the public docket and made available on the Internet. If you submit an electronic comment, the EPA recommends that you include your name and other contact information in the body of your comment and with any disk or CD–ROM you submit. If the EPA cannot read your comment due to technical difficulties and cannot contact you for clarification, the EPA may not be able to consider your comment. Electronic files should not include special characters or any form of encryption and be free of any defects or viruses. For additional information about the EPA's public docket, visit the EPA Docket Center homepage at: *http://www.epa.gov/dockets.*

Docket. The EPA has established a docket for this rulemaking under Docket ID Number EPA–HQ–OAR–2010–0682. All documents in the docket are listed in the regulations.gov index. Although listed in the index, some information is not publicly available, *e.g.,* CBI or other information whose disclosure is restricted by statute. Certain other material, such as copyrighted material, is not placed on the Internet and will be publicly available only in hard copy. Publicly available docket materials are available either electronically in regulations.gov or in hard copy at the EPA Docket Center, WJC West Building, Room 3334, 1301 Constitution Ave. NW., Washington, DC. The Public Reading Room is open from 8:30 a.m. to 4:30 p.m., Monday through Friday, excluding legal holidays. The telephone number for the Public Reading Room is (202) 566–1744, and the telephone number for the EPA Docket Center is (202) 566–1742.

Public Hearing. The public hearing will be held in Wilmington, California on July 16, 2014 at Banning's Landing Community Center, 100 E. Water Street, Wilmington, California 90744. The hearing will convene at 9 a.m. and end at 8 p.m. A lunch break will be held from 1 p.m. until 2 p.m. A dinner break will be held from 5 p.m. until 6 p.m. The public hearing in Galena Park, Texas will be held on August 5, 2014, at the Alvin D. Baggett Recreation Building 1302 Keene Street Galena Park, Texas 77547. The hearing will convene at 9 a.m. and will end at 8 p.m. A lunch break will be held from noon until 1 p.m. A dinner break will be held from 5 p.m. until 6 p.m. Please contact Ms. Virginia Hunt at (919) 541–0832 or at *hunt.virginia@epa.gov* to register to speak at the hearing. The last day to pre-register in advance to speak at the hearing is July 11, 2014, for the Wilmington, California hearing and August 1, 2014, for the Galena Park, Texas hearing. Additionally, requests to speak will be taken the day of the hearing at the hearing registration desk, although preferences on speaking times may not be able to be fulfilled. If you require the service of a translator or

special accommodations such as audio description, please let us know at the time of registration.

FOR FURTHER INFORMATION CONTACT: For questions about this proposed action, contact Ms. Brenda Shine, Sector Policies and Programs Division (E143–01), Office of Air Quality Planning and Standards (OAQPS), U.S. Environmental Protection Agency, Research Triangle Park, North Carolina 27711; telephone number: (919) 541–3608; fax number: (919) 541–0246; and email address: *shine.brenda@epa.gov.* For specific information regarding the risk modeling methodology, contact Mr. Ted Palma, Health and Environmental Impacts Division (C539–02), Office of Air Quality Planning and Standards (OAQPS), U.S. Environmental Protection Agency, Research Triangle Park, North Carolina 27711; telephone number: (919) 541–5470; fax number: (919) 541–0840; and email address: *palma.ted@epa.gov.* For information about the applicability of the National Emissions Standards for Hazardous Air Pollutants (NESHAP) or the New Source Performance Standards (NSPS) to a particular entity, contact Maria Malave, Office of Enforcement and Compliance Assurance (OECA), telephone number: (202) 564–7027; fax number: (202) 564–0050; and email address: *malave.maria@epa.gov.*

SUPPLEMENTARY INFORMATION:

Preamble Acronyms and Abbreviations

We use multiple acronyms and terms in this preamble. While this list may not be exhaustive, to ease the reading of this preamble and for reference purposes, the EPA defines the following terms and acronyms here:

10/25 tpy emissions equal to or greater than 10 tons per year of a single pollutant or 25 tons per year of cumulative pollutants
ACGIH American Conference of Governmental Industrial Hygienists
ADAF age-dependent adjustment factors
AEGL acute exposure guideline levels
AERMOD air dispersion model used by the HEM–3 model
APCD air pollution control devices
API American Petroleum Institute
BDT best demonstrated technology
BLD bag leak detectors
BSER best system of emission reduction
Btu/ft^2 British thermal units per square foot
Btu/scf British thermal units per standard cubic foot
CAA Clean Air Act
CalEPA California EPA
CBI confidential business information
CCU catalytic cracking units
C_{cz} combustion zone combustibles concentration
CDDF chlorinated dibenzodioxins and furans
CDX Central Data Exchange
CEDRI Compliance and Emissions Data Reporting Interface
CEMS continuous emissions monitoring system
CFR Code of Federal Regulations
CO carbon monoxide
CO_2 carbon dioxide
CO_2e carbon dioxide equivalents
COMS continuous opacity monitoring system
COS carbonyl sulfide
CPMS continuous parameter monitoring system
CRU catalytic reforming units
CS_2 carbon disulfide
DCU delayed coking units
DIAL differential absorption light detection and ranging
EBU enhanced biological unit
EPA Environmental Protection Agency
ERPG emergency response planning guidelines
ERT Electronic Reporting Tool
ESP electrostatic precipitator
FCCU fluid catalytic cracking units
FGCD fuel gas combustion devices
FR **Federal Register**
FTIR Fourier transform infrared spectroscopy
g PM/kg grams particulate matter per kilogram
GC gas chromatograph
GHG greenhouse gases
GPS global positioning system
H_2S hydrogen sulfide
HAP hazardous air pollutants
HCl hydrogen chloride
HCN hydrogen cyanide
HEM–3 Human Exposure Model, Version 1.1.0
HF hydrogen fluoride
HFC highest fenceline concentration
HI hazard index
HQ hazard quotient
ICR Information Collection Request
IRIS Integrated Risk Information System
km kilometers
lb/day pounds per day
LDAR leak detection and repair
LFL lower flammability limit
LFL_{cz} combustion zone lower flammability limit
LMC lowest measured concentration
LOAEL lowest-observed-adverse-effect level
LTD long tons per day
MACT maximum achievable control technology
mg/kg-day milligrams per kilogram per day
mg/L milligrams per liter
mg/m^3 milligrams per cubic meter
Mg/yr megagrams per year
MFC measured fenceline concentration
MFR momentum flux ratio
MIR maximum individual risk
mph miles per hour
NAAQS National Ambient Air Quality Standards
NAICS North American Industry Classification System
NAS National Academy of Sciences
NATA National Air Toxics Assessment
NEI National Emissions Inventory
NESHAP National Emissions Standards for Hazardous Air Pollutants
NFS near-field interfering source
NHV_{cz} combustion zone net heating value
Ni nickel
NIOSH National Institutes for Occupational Safety and Health
NOAEL no-observed-adverse-effect level
NO_X nitrogen oxides
NRC National Research Council
NRDC Natural Resources Defense Council
NSPS new source performance standards
NTTAA National Technology Transfer and Advancement Act
OAQPS Office of Air Quality Planning and Standards
OECA Office of Enforcement and Compliance Assurance
OMB Office of Management and Budget
OSC off-site source contribution
OTM other test method
PAH polycyclic aromatic hydrocarbons
PB–HAP hazardous air pollutants known to be persistent and bio-accumulative in the environment
PBT persistent, bioaccumulative, and toxic
PCB polychlorinated biphenyls
PEL probable effect level
PM particulate matter
$PM_{2.5}$ particulate matter 2.5 micrometers in diameter and smaller
POM polycyclic organic matter
ppm parts per million
ppmv parts per million by volume
ppmw parts per million by weight
psia pounds per square inch absolute
psig pounds per square inch gauge
REL reference exposure level
REM Model Refinery Emissions Model
RFA Regulatory Flexibility Act
RfC reference concentration
RfD reference dose
RTR residual risk and technology review
SAB Science Advisory Board
SBA Small Business Administration
SBAR Small Business Advocacy Review
SCR selective catalytic reduction
SISNOSE significant economic impact on a substantial number of small entities
S/L/Ts state, local and tribal air pollution control agencies
SO_2 sulfur dioxide
SRU sulfur recovery unit
SSM startup, shutdown and malfunction
STEL short-term exposure limit
TEQ toxicity equivalent
TLV threshold limit value
TOC total organic carbon
TOSHI target organ-specific hazard index
tpy tons per year
TRIM.FaTE Total Risk Integrated Methodology.Fate, Transport, and Ecological Exposure model
UB uniform background
UF uncertainty factor
UMRA Unfunded Mandates Reform Act
URE unit risk estimate
UV–DOAS ultraviolet differential optical absorption spectroscopy
VCS voluntary consensus standards
VOC volatile organic compounds
WJC William Jefferson Clinton
°F degrees Fahrenheit
ΔC the concentration difference between the highest measured concentration and the lowest measured concentration
μg/m^3 micrograms per cubic meter

The EPA also defines the following abbreviations for regulations cited within this preamble:

AWP Alternative Work Practice To Detect Leaks From Equipment (40 CFR 63.11(c), (d) and (e))
Benzene NESHAP National Emission Standards for Hazardous Air Pollutants: Benzene Emissions from Maleic Anhydride Plants, Ethylbenzene/Styrene Plants, Benzene Storage Vessels, Benzene Equipment Leaks, and Coke By-Product Recovery Plants (40 CFR part 61, subpart L as of publication in the **Federal Register** at 54 FR 38044, September 14, 1989)
BWON National Emission Standard for Benzene Waste Operations (40 CFR part 61, subpart FF)
Generic MACT National Emission Standards for Storage Vessels (40 CFR part 63, subpart WW)
HON National Emission Standards for Organic Hazardous Air Pollutants (40 CFR part 63, subparts F, G and H)
Marine Vessel MACT National Emission Standards for Marine Tank Vessel Loading Operations (40 CFR part 63, subpart Y)
Refinery MACT 1 National Emission Standards for Hazardous Air Pollutants From Petroleum Refineries (40 CFR part 63, subpart CC)
Refinery MACT 2 National Emission Standards for Hazardous Air Pollutants for Petroleum Refineries: Catalytic Cracking Units, Catalytic Reforming Units, and Sulfur Recovery Units (40 CFR part 63, subpart UUU)
Refinery NSPS J Standards of Performance for Petroleum Refineries (40 CFR part 60, subpart J)
Refinery NSPS Ja Standards of Performance for Petroleum Refineries for which Construction, Reconstruction, or Modification Commenced After May 14, 2007 (40 CFR part 60, subpart Ja)

Organization of This Document. The information in this preamble is organized as follows:

I. General Information
A. Does this action apply to me?
B. Where can I get a copy of this document and other related information?
C. What should I consider as I prepare my comments for the EPA?
D. Public Hearing
II. Background
A. What is the statutory authority for this action?
B. What are the source categories and how do the NESHAP and NSPS regulate emissions?
C. What data collection activities were conducted to support this action?
D. What other relevant background information and data are available?
III. Analytical Procedures
A. How did we estimate post-MACT risks posed by the source categories?
B. How did we consider the risk results in making decisions for this proposal?
C. How did we perform the technology review?
IV. Analytical Results and Proposed Decisions
A. What actions are we taking pursuant to CAA sections 112(d)(2) and 112(d)(3)?
B. What are the results and proposed decisions based on our technology review?
C. What are the results of the risk assessment and analyses?
D. What are our proposed decisions regarding risk acceptability, ample margin of safety and adverse environmental effects?
E. What other actions are we proposing?
F. What compliance dates are we proposing?
V. Summary of Cost, Environmental and Economic Impacts
A. What are the affected sources, the air quality impacts and cost impacts?
B. What are the economic impacts?
C. What are the benefits?
VI. Request for Comments
VII. Submitting Data Corrections
VIII. Statutory and Executive Order Reviews
A. Executive Order 12866: Regulatory Planning and Review and Executive Order 13563: Improving Regulation and Regulatory Review
B. Paperwork Reduction Act
C. Regulatory Flexibility Act
D. Unfunded Mandates Reform Act
E. Executive Order 13132: Federalism
F. Executive Order 13175: Consultation and Coordination With Indian Tribal Governments
G. Executive Order 13045: Protection of Children From Environmental Health Risks and Safety Risks
H. Executive Order 13211: Actions Concerning Regulations That Significantly Affect Energy Supply, Distribution, or Use
I. National Technology Transfer and Advancement Act
J. Executive Order 12898: Federal Actions To Address Environmental Justice in Minority Populations and Low-Income Populations

A redline version of the regulatory language that incorporates the proposed changes in this action is available in the docket for this action (Docket ID No. EPA–HQ–OAR–2010–0682).

I. General Information

A. Does this action apply to me?

Table 1 of this preamble lists the industries that are the subject of this proposal. Table 1 is not intended to be exhaustive but rather to provide a guide for readers regarding the entities that this proposed action is likely to affect. These proposed standards, once promulgated, will be directly applicable to the affected sources. Thus, federal, state, local and tribal government entities would not be affected by this proposed action. As defined in the ''Initial List of Categories of Sources Under Section 112(c)(1) of the Clean Air Act Amendments of 1990'' (see 57 FR 31576, July 16, 1992), the ''Petroleum Refineries—Catalytic Cracking (Fluid and other) Units, Catalytic Reforming Units, and Sulfur Plant Units'' source category and the ''Petroleum Refineries—Other Sources Not Distinctly Listed'' both consist of any facility engaged in producing gasoline, naphthas, kerosene, jet fuels, distillate fuel oils, residual fuel oils, lubricants, or other products from crude oil or unfinished petroleum derivatives. The first of these source categories includes process vents associated with the following refinery process units: Catalytic cracking (fluid and other) units, catalytic reforming units and sulfur plant units. The second source category includes all emission sources associated with refinery process units except the process vents listed in the Petroleum Refineries—Catalytic Cracking (Fluid and Other) Units, Catalytic Reforming Units, and Sulfur Plant Units Source Category. The emission sources included in this source category include, but are not limited to, miscellaneous process vents (vents other than those listed in Petroleum Refineries—Catalytic Cracking (Fluid and Other) Units, Catalytic Reforming Units, and Sulfur Plant Units Source Category), equipment leaks, storage vessels, wastewater, gasoline loading, marine vessel loading, and heat exchange systems.

TABLE 1—INDUSTRIES AFFECTED BY THIS PROPOSED ACTION

Industry	NAICS[a] Code	Examples of regulated entities
Petroleum Refining Industry	324110	Petroleum refinery sources that are subject to 40 CFR part 60, subpart J and Ja and 40 CFR part 63, subparts CC and UUU.

[a] North American Industry Classification System.

B. Where can I get a copy of this document and other related information?

Following signature by the EPA Administrator, the EPA will post a copy of this proposed action at: *http://www.epa.gov/ttn/atw/petref.html*. Following publication in the **Federal Register**, the EPA will post the **Federal Register** version of the proposal and key technical documents at the Web site. Information on the overall residual risk and technology review (RTR) program is available at the following Web site: *http://www.epa.gov/ttn/atw/rrisk/rtrpg.html*.

C. What should I consider as I prepare my comments for the EPA?

Submitting CBI. Do not submit information containing CBI to the EPA through *http://www.regulations.gov* or email. Clearly mark the part or all of the information that you claim to be CBI. For CBI information on a disk or CD–ROM that you mail to the EPA, mark the outside of the disk or CD–ROM as CBI and then identify electronically within the disk or CD–ROM the specific information that is claimed as CBI. In addition to one complete version of the comments that includes information claimed as CBI, you must submit a copy of the comments that does not contain the information claimed as CBI for inclusion in the public docket. If you submit a CD–ROM or disk that does not contain CBI, mark the outside of the disk or CD–ROM clearly that it does not contain CBI. Information not marked as CBI will be included in the public docket and the EPA's electronic public docket without prior notice. Information marked as CBI will not be disclosed except in accordance with procedures set forth in 40 Code of Federal Regulations (CFR) part 2. Send or deliver information identified as CBI only to the following address: Roberto Morales, OAQPS Document Control Officer (C404–02), OAQPS, U.S. Environmental Protection Agency, Research Triangle Park, North Carolina 27711, Attention Docket ID Number EPA–HQ–OAR–2010–0682.

D. Public Hearing

The hearing will provide interested parties the opportunity to present data, views or arguments concerning the proposed action. The EPA will make every effort to accommodate all speakers who arrive and register. The EPA may ask clarifying questions during the oral presentations but will not respond to the presentations at that time. Written statements and supporting information submitted during the comment period will be considered with the same weight as oral comments and supporting information presented at the public hearing. Written comments on the proposed rule must be postmarked by August 29, 2014. Commenters should notify Ms. Virginia Hunt if they will need specific equipment, or if there are other special needs related to providing comments at the hearing. Oral testimony will be limited to 5 minutes for each commenter. The EPA encourages commenters to provide the EPA with a copy of their oral testimony electronically (via email or CD) or in hard copy form. Verbatim transcripts of the hearings and written statements will be included in the docket for the rulemaking. The EPA will make every effort to follow the schedule as closely as possible on the day of the hearing; however, please plan for the hearing to run either ahead of schedule or behind schedule. Information regarding the hearing will be available at: *http://www.epa.gov/ttnatw01/petrefine/petrefpg.html*.

II. Background

A. What is the statutory authority for this action?

1. NESHAP

Section 112 of the Clean Air Act (CAA) establishes a two-stage regulatory process to address emissions of HAP from stationary sources. In the first stage, after the EPA has identified categories of sources emitting one or more of the HAP listed in CAA section 112(b), CAA section 112(d) requires us to promulgate technology-based national emissions standards for hazardous air pollutants (NESHAP) for those sources. ''Major sources'' are those that emit or have the potential to emit 10 tpy or more of a single HAP or 25 tpy or more of any combination of HAP. For major sources, the technology-based NESHAP must reflect the maximum degree of emissions reductions of HAP achievable (after considering cost, energy requirements and non-air quality health and environmental impacts) and are commonly referred to as maximum achievable control technology (MACT) standards.

MACT standards must reflect the maximum degree of emissions reduction achievable through the application of measures, processes, methods, systems or techniques, including, but not limited to, measures that (1) reduce the volume of or eliminate pollutants through process changes, substitution of materials or other modifications; (2) enclose systems or processes to eliminate emissions; (3) capture or treat pollutants when released from a process, stack, storage or fugitive emissions point; (4) are design, equipment, work practice or operational standards (including requirements for operator training or certification); or (5) are a combination of the above. CAA section 112(d)(2)(A)–(E). The MACT standards may take the form of design, equipment, work practice or operational standards where the EPA first determines either that (1) a pollutant cannot be emitted through a conveyance designed and constructed to emit or capture the pollutant, or that any requirement for, or use of, such a conveyance would be inconsistent with law; or (2) the application of measurement methodology to a particular class of sources is not practicable due to technological and economic limitations. CAA section 112(h)(1)–(2).

The MACT ''floor'' is the minimum control level allowed for MACT standards promulgated under CAA section 112(d)(3) and may not be based on cost considerations. For new sources, the MACT floor cannot be less stringent than the emissions control that is achieved in practice by the best-controlled similar source. The MACT floor for existing sources can be less stringent than floors for new sources but not less stringent than the average emissions limitation achieved by the best-performing 12 percent of existing sources in the category or subcategory (or the best-performing five sources for categories or subcategories with fewer than 30 sources). In developing MACT standards, the EPA must also consider control options that are more stringent than the floor. We may establish standards more stringent than the floor based on considerations of the cost of achieving the emission reductions, any non-air quality health and environmental impacts and energy requirements.

The EPA is then required to review these technology-based standards and revise them ''as necessary (taking into account developments in practices, processes, and control technologies)'' no less frequently than every eight years. CAA section 112(d)(6). In conducting this review, the EPA is not required to recalculate the MACT floor. *Natural Resources Defense Council (NRDC)* v. *EPA,* 529 F.3d 1077, 1084 (D.C. Cir. 2008). *Association of Battery Recyclers, Inc.* v. *EPA,* 716 F.3d 667 (D.C. Cir. 2013).

The second stage in standard-setting focuses on reducing any remaining (*i.e.,* ''residual'') risk according to CAA section 112(f). Section 112(f)(1) required that the EPA by November 1996 prepare a report to Congress discussing (among

other things) methods of calculating the risks posed (or potentially posed) by sources after implementation of the MACT standards, the public health significance of those risks and the EPA's recommendations as to legislation regarding such remaining risk. The EPA prepared and submitted the *Residual Risk Report to Congress,* EPA–453/R–99–001 (*Risk Report*) in March 1999. CAA section 112(f)(2) then provides that if Congress does not act on any recommendation in the *Risk Report,* the EPA must analyze and address residual risk for each category or subcategory of sources 8 years after promulgation of such standards pursuant to CAA section 112(d).

Section 112(f)(2) of the CAA requires the EPA to determine for source categories subject to MACT standards whether the emission standards provide an ample margin of safety to protect public health. Section 112(f)(2)(B) of the CAA expressly preserves the EPA's use of the two-step process for developing standards to address any residual risk and the agency's interpretation of ''ample margin of safety'' developed in the National Emissions Standards for Hazardous Air Pollutants: Benzene Emissions from Maleic Anhydride Plants, Ethylbenzene/Styrene Plants, Benzene Storage Vessels, Benzene Equipment Leaks, and Coke By-Product Recovery Plants (Benzene NESHAP) (54 FR 38044, September 14, 1989). The EPA notified Congress in the *Risk Report* that the agency intended to use the Benzene NESHAP approach in making CAA section 112(f) residual risk determinations (EPA–453/R–99–001, p. ES–11). The EPA subsequently adopted this approach in its residual risk determinations and in a challenge to the risk review for the Synthetic Organic Chemical Manufacturing source category, the United States Court of Appeals for the District of Columbia Circuit upheld as reasonable the EPA's interpretation that subsection 112(f)(2) incorporates the standards established in the Benzene NESHAP. *See NRDC* v. *EPA,* 529 F.3d 1077, 1083 (D.C. Cir. 2008) (''[S]ubsection 112(f)(2)(B) expressly incorporates the EPA's interpretation of the Clean Air Act from the Benzene standard, complete with a citation to the **Federal Register**.''); *see also A Legislative History of the Clean Air Act Amendments of 1990,* vol. 1, p. 877 (Senate debate on Conference Report).

The first step in the process of evaluating residual risk is the determination of acceptable risk. If risks are unacceptable, the EPA cannot consider cost in identifying the emissions standards necessary to bring risks to an acceptable level. The second step is the determination of whether standards must be further revised in order to provide an ample margin of safety to protect public health. The ample margin of safety is the level at which the standards must be set, unless an even more stringent standard is necessary to prevent, taking into consideration costs, energy, safety and other relevant factors, an adverse environmental effect.

a. Step 1—Determining Acceptability

The agency in the Benzene NESHAP concluded ''that the acceptability of risk under section 112 is best judged on the basis of a broad set of health risk measures and information'' and that the ''judgment on acceptability cannot be reduced to any single factor.'' *Id.* at 38046. The determination of what represents an ''acceptable'' risk is based on a judgment of ''what risks are acceptable in the world in which we live'' (*Risk Report* at 178, quoting *NRDC* v. *EPA,* 824 F. 2d 1146, 1165 (D.C. Cir. 1987) (en banc) (''Vinyl Chloride''), recognizing that our world is not risk-free.

In the Benzene NESHAP, we stated that ''EPA will generally presume that if the risk to [the maximum exposed] individual is no higher than approximately one in 10 thousand, that risk level is considered acceptable.'' 54 FR at 38045, September 14, 1989. We discussed the maximum individual lifetime cancer risk (or maximum individual risk (MIR)) as being ''the estimated risk that a person living near a plant would have if he or she were exposed to the maximum pollutant concentrations for 70 years.'' *Id.* We explained that this measure of risk ''is an estimate of the upper bound of risk based on conservative assumptions, such as continuous exposure for 24 hours per day for 70 years.'' *Id.* We acknowledged that maximum individual lifetime cancer risk ''does not necessarily reflect the true risk, but displays a conservative risk level which is an upper-bound that is unlikely to be exceeded.'' *Id.*

Understanding that there are both benefits and limitations to using the MIR as a metric for determining acceptability, we acknowledged in the Benzene NESHAP that ''consideration of maximum individual risk * * * must take into account the strengths and weaknesses of this measure of risk.'' *Id.* Consequently, the presumptive risk level of 100-in-1 million (1-in-10 thousand) provides a benchmark for judging the acceptability of maximum individual lifetime cancer risk, but does not constitute a rigid line for making that determination. Further, in the Benzene NESHAP, we noted that:

> [p]articular attention will also be accorded to the weight of evidence presented in the risk assessment of potential carcinogenicity or other health effects of a pollutant. While the same numerical risk may be estimated for an exposure to a pollutant judged to be a known human carcinogen, and to a pollutant considered a possible human carcinogen based on limited animal test data, the same weight cannot be accorded to both estimates. In considering the potential public health effects of the two pollutants, the Agency's judgment on acceptability, including the MIR, will be influenced by the greater weight of evidence for the known human carcinogen.

Id. at 38046. The agency also explained in the Benzene NESHAP that:

> [i]n establishing a presumption for MIR, rather than a rigid line for acceptability, the Agency intends to weigh it with a series of other health measures and factors. These include the overall incidence of cancer or other serious health effects within the exposed population, the numbers of persons exposed within each individual lifetime risk range and associated incidence within, typically, a 50 km exposure radius around facilities, the science policy assumptions and estimation uncertainties associated with the risk measures, weight of the scientific evidence for human health effects, other quantified or unquantified health effects, effects due to co-location of facilities, and co-emission of pollutants.

Id. at 38045. In some cases, these health measures and factors taken together may provide a more realistic description of the magnitude of risk in the exposed population than that provided by maximum individual lifetime cancer risk alone.

As noted earlier, in *NRDC* v. *EPA,* the court held that section 112(f)(2) ''incorporates the EPA's interpretation of the Clean Air Act from the Benzene Standard.'' The court further held that Congress' incorporation of the Benzene standard applies equally to carcinogens and non-carcinogens. 529 F.3d at 1081–82. Accordingly, we also consider non-cancer risk metrics in our determination of risk acceptability and ample margin of safety.

b. Step 2—Determination of Ample Margin of Safety

CAA section 112(f)(2) requires the EPA to determine, for source categories subject to MACT standards, whether those standards provide an ample margin of safety to protect public health. As explained in the Benzene NESHAP, ''the second step of the inquiry, determining an 'ample margin of safety,' again includes consideration of all of the health factors, and whether to reduce the risks even further. . . .

Beyond that information, additional factors relating to the appropriate level of control will also be considered, including costs and economic impacts of controls, technological feasibility, uncertainties and any other relevant factors. Considering all of these factors, the agency will establish the standard at a level that provides an ample margin of safety to protect the public health, as required by section 112.'' 54 FR at 38046, September 14, 1989.

According to CAA section 112(f)(2)(A), if the MACT standards for HAP ''classified as a known, probable, or possible human carcinogen do not reduce lifetime excess cancer risks to the individual most exposed to emissions from a source in the category or subcategory to less than one in one million,'' the EPA must promulgate residual risk standards for the source category (or subcategory), as necessary to provide an ample margin of safety to protect public health. In doing so, the EPA may adopt standards equal to existing MACT standards if the EPA determines that the existing standards (*i.e.,* the MACT standards) are sufficiently protective. *NRDC* v. *EPA,* 529 F.3d 1077, 1083 (D.C. Cir. 2008) (''If EPA determines that the existing technology-based standards provide an 'ample margin of safety,' then the Agency is free to readopt those standards during the residual risk rulemaking.'') The EPA must also adopt more stringent standards, if necessary, to prevent an adverse environmental effect,[1] but must consider cost, energy, safety and other relevant factors in doing so.

The CAA does not specifically define the terms ''individual most exposed,'' ''acceptable level'' and ''ample margin of safety.'' In the Benzene NESHAP, 54 FR at 38044–38045, September 14, 1989, we stated as an overall objective:

> In protecting public health with an ample margin of safety under section 112, EPA strives to provide maximum feasible protection against risks to health from hazardous air pollutants by (1) protecting the greatest number of persons possible to an individual lifetime risk level no higher than approximately 1-in-1 million and (2) limiting to no higher than approximately 1-in-10 thousand [i.e., 100-in-1 million] the estimated risk that a person living near a plant would have if he or she were exposed to the maximum pollutant concentrations for 70 years.

The agency further stated that ''[t]he EPA also considers incidence (the number of persons estimated to suffer cancer or other serious health effects as a result of exposure to a pollutant) to be an important measure of the health risk to the exposed population. Incidence measures the extent of health risks to the exposed population as a whole, by providing an estimate of the occurrence of cancer or other serious health effects in the exposed population.'' *Id.* at 38045.

In the ample margin of safety decision process, the agency again considers all of the health risks and other health information considered in the first step, including the incremental risk reduction associated with standards more stringent than the MACT standard or a more stringent standard that EPA has determined is necessary to ensure risk is acceptable. In the ample margin of safety analysis, the agency considers additional factors, including costs and economic impacts of controls, technological feasibility, uncertainties and any other relevant factors. Considering all of these factors, the agency will establish the standard ''at a level that provides an ample margin of safety to protect the public health,'' as required by CAA section 112(f). 54 FR 38046, September 14, 1989.

2. NSPS

Section 111 of the CAA establishes mechanisms for controlling emissions of air pollutants from stationary sources. Section 111(b) of the CAA provides authority for the EPA to promulgate new source performance standards (NSPS) which apply only to newly constructed, reconstructed and modified sources. Once the EPA has elected to set NSPS for new and modified sources in a given source category, CAA section 111(d) calls for regulation of existing sources, with certain exceptions explained below.

Specifically, section 111(b) of the CAA requires the EPA to establish emission standards for any category of new and modified stationary sources that the Administrator, in his or her judgment, finds ''causes, or contributes significantly to, air pollution which may reasonably be anticipated to endanger public health or welfare.'' The EPA has previously made endangerment findings under this section of the CAA for more than 60 stationary source categories and subcategories that are now subject to NSPS.

Section 111 of the CAA gives the EPA significant discretion to identify the affected facilities within a source category that should be regulated. To define the affected facilities, the EPA can use size thresholds for regulation and create subcategories based on source type, class or size. Emission limits also may be established either for equipment within a facility or for an entire facility. For listed source categories, the EPA must establish ''standards of performance'' that apply to sources that are constructed, modified or reconstructed after the EPA proposes the NSPS for the relevant source category.[2]

The EPA also has significant discretion to determine the appropriate level for the standards. Section 111(a)(1) of the CAA provides that NSPS are to ''reflect the degree of emission limitation achievable through the application of the best system of emission reduction which (taking into account the cost of achieving such reduction and any non-air quality health and environmental impact and energy requirements) the Administrator determines has been adequately demonstrated.'' This level of control is commonly referred to as best demonstrated technology (BDT) or the best system of emission reduction (BSER). The standard that the EPA develops, based on the BSER achievable at that source, is commonly a numerical emission limit, expressed as a performance level (*i.e.,* a rate-based standard). Generally, the EPA does not prescribe a particular technological system that must be used to comply with a NSPS. Rather, sources remain free to elect whatever combination of measures will achieve equivalent or greater control of emissions.

Costs are also considered in evaluating the appropriate standard of performance for each category or subcategory. The EPA generally compares control options and estimated costs and emission impacts of multiple, specific emission standard options under consideration. As part of this analysis, the EPA considers numerous factors relating to the potential cost of the regulation, including industry organization and market structure, control options available to reduce emissions of the regulated pollutant(s) and costs of these controls.

[1] ''Adverse environmental effect'' is defined as any significant and widespread adverse effect, which may be reasonably anticipated to wildlife, aquatic life or natural resources, including adverse impacts on populations of endangered or threatened species or significant degradation of environmental qualities over broad areas. CAA section 112(a)(7).

[2] Specific statutory and regulatory provisions define what constitutes a modification or reconstruction of a facility. 40 CFR 60.14 provides that an existing facility is modified and, therefore, subject to an NSPS, if it undergoes ''any physical change in the method of operation . . . which increases the amount of any air pollutant emitted by such source or which results in the emission of any air pollutant not previously emitted.'' 40 CFR 60.15, in turn, provides that a facility is reconstructed if components are replaced at an existing facility to such an extent that the capital cost of the new equipment/components exceed 50 percent of what is believed to be the cost of a completely new facility.

B. What are the source categories and how do the NESHAP and NSPS regulate emissions?

The source categories include petroleum refineries engaged in converting crude oil into refined products, including liquefied petroleum gas, gasoline, kerosene, aviation fuel, diesel fuel, fuel oils, lubricating oils and feedstocks for the petrochemical industry. Petroleum refinery activities start with the receipt of crude oil for storage at the refinery, include all petroleum handling and refining operations, and terminate with loading of refined products into pipelines, tank or rail cars, tank trucks, or ships or barges that take products from the refinery to distribution centers. Petroleum refinery-specific process units include fluid catalytic cracking units (FCCU) and catalytic reforming units (CRU), as well as units and processes found at many types of manufacturing facilities (including petroleum refineries), such as storage vessels and wastewater treatment plants. HAP emitted by this industry include organics (*e.g.,* acetaldehyde, benzene, formaldehyde, hexane, phenol, naphthalene, 2-methylnaphthalene, dioxins, furans, ethyl benzene, toluene and xylene); reduced sulfur compounds (*i.e.,* carbonyl sulfide (COS), carbon disulfide (CS_2)); inorganics (*e.g.,* hydrogen chloride (HCl), hydrogen cyanide (HCN), chlorine, hydrogen fluoride (HF)); and metals (*e.g.,* antimony, arsenic, beryllium, cadmium, chromium, cobalt, lead, mercury, manganese and nickel). Criteria pollutants and other non-hazardous air pollutants that are also emitted include nitrogen oxides (NO_X), particulate matter (PM), sulfur dioxide (SO_2), volatile organic compounds (VOC), carbon monoxide (CO), greenhouse gases (GHG), and total reduced sulfur.

The federal emission standards that are the primary subject of this proposed rulemaking are:

- National Emission Standards for Hazardous Air Pollutants from Petroleum Refineries (40 CFR part 63, subpart CC) (Refinery MACT 1);
- National Emission Standards for Hazardous Air Pollutants for Petroleum Refineries: Catalytic Cracking Units, Catalytic Reforming Units, and Sulfur Recovery Units (40 CFR part 63, subpart UUU) (Refinery MACT 2);
- Standards of Performance for Petroleum Refineries (40 CFR part 60, subpart J) (Refinery NSPS J); and
- Standards of Performance for Petroleum Refineries for which Construction, Reconstruction, or Modification Commenced After May 14, 2007 (40 CFR part 60, subpart Ja) (Refinery NSPS Ja).

1. Refinery MACT Standards

The EPA promulgated MACT standards pursuant to CAA section 112(d)(2) and (3) for refineries located at major sources in three separate rules. On August 18, 1995, the first Petroleum Refinery MACT standard was promulgated in 40 CFR part 63, subpart CC (60 FR 43620). This rule is known as ''Refinery MACT 1'' and covers the ''Sources Not Distinctly Listed,'' meaning it includes all emission sources from petroleum refinery process units, except those listed separately under the section 112(c) source category list expected to be regulated by other MACT standards. Some of the emission sources regulated in Refinery MACT 1 include miscellaneous process vents, storage vessels, wastewater, equipment leaks, gasoline loading racks, marine tank vessel loading and heat exchange systems.

Certain process vents that were listed as a separate source category under CAA section 112(c) and that were not addressed as part of the Refinery MACT 1 were subsequently regulated under a second MACT standard specific to these petroleum refinery process vents, codified as 40 CFR part 63, subpart UUU, which we promulgated on April 11, 2002 (67 FR 17762). This standard, which is referred to as ''Refinery MACT 2,'' covers process vents on catalytic cracking units (CCU) (including FCCU), CRU and sulfur recovery units (SRU).

Finally, on October 28, 2009, we promulgated MACT standards for heat exchange systems, which the EPA had not addressed in the original 1995 Refinery MACT 1 rule (74 FR 55686). In this same 2009 action, we updated cross-references to the General Provisions in 40 CFR part 63. On June 20, 2013 (78 FR 37133), we promulgated minor revisions to the heat exchange provisions of Refinery MACT 1.

On September 27, 2012, Air Alliance Houston, California Communities Against Toxics and other environmental and public health groups filed a lawsuit alleging that the EPA missed statutory deadlines to review and revise Refinery MACT 1 and 2.

The EPA has reached an agreement to settle that litigation. In a consent decree filed January 13, 2014 in the U.S. District Court for the District of Columbia, the EPA commits to perform the risk and technology review for Refinery MACT 1 and 2 and by May 15, 2014, either propose any regulations or propose that additional regulations are not necessary. Under the Consent Decree, the EPA commits to take final action by April 17, 2015, establishing regulations pursuant to the risk and technology review or to issue a final determination that revision to the existing rules is not necessary.

2. Refinery NSPS

Refinery NSPS subparts J and Ja regulate criteria pollutant emissions, including PM, SO_2, NO_X and CO from FCCU catalyst regenerators, fuel gas combustion devices (FGCD) and sulfur recovery plants. Refinery NSPS Ja also regulates criteria pollutant emissions from fluid coking units and delayed coking units (DCU).

The NSPS for petroleum refineries (40 CFR part 60, subpart J; Refinery NSPS J) were promulgated in 1974, amended in 1976 and amended again in 2008, following a review of the standards. As part of the review that led to the 2008 amendments to Refinery NSPS J, the EPA developed separate standards of performance for new process units (40 CFR part 60, subpart Ja; Refinery NSPS Ja). However, the EPA received petitions for reconsideration and granted reconsideration on issues related to those standards. On December 22, 2008, the EPA addressed petition issues related to process heaters and flares by proposing amendments to certain provisions. Final amendments to Refinery NSPS Ja were promulgated on September 12, 2012 (77 FR 56422).

In this action, we are proposing amendments to address technical corrections and clarifications raised in a 2008 industry petition for reconsideration applicable to Refinery NSPS Ja. We are addressing these issues in this proposal because they also affect sources included within these proposed amendments to Refinery MACT 1 and 2.

C. What data collection activities were conducted to support this action?

In 2010, the EPA began a significant effort to gather additional information and perform analyses to determine how to address statutory obligations for the Refinery MACT standards and the NSPS. This effort focused on gathering comprehensive information through an industry-wide Information Collection Request (ICR) on petroleum refineries, conducted under CAA section 114 authority. The information not claimed as CBI by respondents is available in the docket (see Docket Item Nos. EPA–HQ–OAR–2010–0682–0064 through 0069). The EPA issued a single ICR (OMB Control Number 2060–0657) for sources covered under Refinery MACT 1 and 2 and Refinery NSPS J and Ja.

On April 1, 2011, the ICR was sent out to the petroleum refining industry. In a comprehensive manner, the ICR

collected information on processing characteristics, crude slate characteristics, emissions inventories and source testing to fill known data gaps. The ICR had four components: (1) A questionnaire on processes and controls to be completed by all petroleum refineries (Component 1); (2) an emissions inventory to be developed by all petroleum refineries using the emissions estimation protocol developed for this effort (Component 2); (3) distillation feed sampling and analysis to be conducted by all petroleum refineries (Component 3); and (4) emissions source testing to be completed in accordance with an EPA-approved protocol for specific sources at specific petroleum refineries (Component 4). We received responses from 149 refineries. We have since learned that seven refineries are synthetic minor sources, bringing the total number of major source refineries operating in 2010 to 142.

Information collected through the ICR was used to establish the baseline emissions and control levels for purposes of the regulatory reviews, to identify the most effective control measures, and to estimate the environmental and cost impacts associated with the regulatory options considered. As part of the information collection process, we provided a protocol for survey respondents to follow in developing the emissions inventories under Component 2 (*Emission Estimation Protocol for Petroleum Refineries,* available as Docket Item Number EPA–HQ–OAR–2010–0682–0060). The protocol contained detailed guidance for estimating emissions from typical refinery emission sources and was intended to provide a measure of consistency and replicability for emission estimates across the refining industry. Prior to issuance of the ICR, the protocol was publicly disseminated and underwent several revisions after public comments were received. Draft and final versions of the emission estimation protocol are provided in the docket to this rule (Docket ID Number EPA–HQ–OAR–2010–0682). The protocol provided a hierarchy of methodologies available for estimating emissions that corresponded to the level of information available at refineries. For each emission source, the various emission measurement or estimation methods specific to that source were ranked in order of preference, with ''Methodology Rank 1'' being the preferred method, followed by ''Methodology Rank 2,'' and so on. Refinery owners and operators were requested through the ICR to use the highest ranked method (with Methodology Rank 1 being the highest) for which data were available. Methodology Ranks 1 or 2 generally relied on continuous emission measurements. When continuous measurement data were not available, engineering calculations or site-specific emission factors (Methodology Ranks 3 and 4) were specified in the protocol by EPA; these methods generally needed periodic, site-specific measurements. When site-specific measurement or test data were not available, default emission factors (Methodology Rank 5) were provided in the protocol by EPA.

As we reviewed the ICR-submitted emissions inventories, we determined that, in some cases, refiners either did not follow the protocol methodology or made an error in their calculations. This was evident because pollutants that we expected to be reported from certain emission sources were either not reported or were reported in amounts that were not consistent with the protocol methodology. In these cases, we contacted the refineries and, based on their replies, made corrections to emission estimates. The original Component 2 submittals, documentation of the changes as a result of our review, and the final emissions inventories we relied on for our analyses are available in the technical memorandum entitled *Emissions Data Quality Memorandum and Development of the Risk Model Input File,* in Docket ID Number EPA–HQ–OAR–2010–0682.

Collected emissions test data (test reports, continuous emissions monitoring system (CEMS) data and other continuous monitoring system data) were used to assess the effectiveness of existing control measures, to fill data gaps and to examine variability in emissions. The ICR requested source testing for a total of 90 specific process units at 75 particular refineries across the industry. We received a total of 72 source tests; in some cases, refinery sources claimed that units we requested to be tested were no longer in operation, did not exist or did not have an emission point to the atmosphere (this was the case for hydrocrackers). In other cases, refiners claimed they were not able to conduct testing because of process characteristics. For example, source testing of DCU proved to be difficult because the moisture content of the steam vent required a significant amount of gas to be sampled to account for dilution. Venting periods of less than 20 minutes did not accommodate this strategy and, therefore, if refiners vented for less than 20 minutes, they did not sample their steam vent. As a result, only two DCU tests out of eight requested were received as part of Component 4. Results of the stack test data are compiled and available in Docket ID Number EPA–HQ–OAR–2010–0682.

D. What other relevant background information and data are available?

Over the past several years, the EPA has worked with the Texas Commission on Environmental Quality and industry representatives to better characterize proper flare performance. Flares are used to control emissions from various vents at refineries as well as at other types of facilities not in the petroleum refinery source categories, such as chemical and petrochemical manufacturing facilities. In April 2012, we released a technical report for peer review that discussed our observations regarding the operation and performance of flares. The report was a result of the analysis of several flare efficiency studies and flare performance test reports. To provide an objective evaluation of our analysis, we asked a third party to facilitate an ad hoc peer review process of the technical report. This third party established a balanced peer review panel of reviewers from outside the EPA. These reviewers consisted of individuals that could be considered ''technical combustion experts'' within four interest groups: the refinery industry, industrial flare consultants, academia, and environmental stakeholders.

The EPA developed a charge statement with ten charge questions for the review panel. The peer reviewers were asked to perform a thorough review of the technical report and answer the charge questions to the extent possible, based on their technical expertise. The details of the peer review process and the charge questions, as well as comments received from the peer review process, were posted online to the Consolidated Petroleum Refinery Rulemaking Repository at the EPA's Technology Transfer Network Air Toxics Web site (see *http://www.epa.gov/ttn/atw/petref.html*). These items are also provided in a memorandum entitled *Peer Review of ''Parameters for Properly Designed and Operated Flares''* (see Docket ID Number EPA–HQ–OAR–2010–0682). After considering the comments received from the peer review process, we developed a final technical memorandum (see technical memorandum, *Flare Performance Data: Summary of Peer Review Comments and Additional Data Analysis for Steam-*

Assisted Flares, in Docket ID Number EPA–HQ–OAR–2010–0682).

III. Analytical Procedures

In this section, we describe the analyses performed to support the proposed decisions for the RTR and other issues addressed in this proposal.

A. How did we estimate post-MACT risks posed by the source categories?

The EPA conducted a risk assessment that provided estimates of the MIR posed by the HAP emissions from each source in the source categories, the hazard index (HI) for chronic exposures to HAP with the potential to cause non-cancer health effects, and the hazard quotient (HQ) for acute exposures to HAP with the potential to cause non-cancer health effects. The assessment also provided estimates of the distribution of cancer risks within the exposed populations, cancer incidence and an evaluation of the potential for adverse environmental effects for each source category. The eight sections that follow this paragraph describe how we estimated emissions and conducted the risk assessment. The docket for this rulemaking (Docket ID Number EPA–HQ–OAR–2010–0682) contains the following document which provides more information on the risk assessment inputs and models: *Draft Residual Risk Assessment for the Petroleum Refining Source Sector.* The methods used to assess risks (as described in the eight primary steps below) are consistent with those peer-reviewed by a panel of the EPA's Science Advisory Board (SAB) in 2009 and described in their peer review report issued in 2010 [3]; they are also consistent with the key recommendations contained in that report.

1. How did we estimate actual emissions and identify the emissions release characteristics?

We compiled data sets using the ICR emission inventory submittals as a starting point. The data sets were refined following an extensive quality assurance check of source locations, emission release characteristics, annual emission estimates and FCCU release parameters. They were then updated based on additional information received from refineries. In addition, we supplemented these data with results from stack testing, which were required later than the inventories under the ICR. As the stack test information was received, we compared these data against the refined emission inventories and the default emission factors provided in the *Emission Estimation Protocol for Petroleum Refineries* (Docket Item Number EPA–HQ–OAR–2010–0682–0060).

Based on the stack test data for FCCU, we calculated that, on average, HCN emissions were a factor of 10 greater than the average emission factor of 770 pounds per barrel FCCU feed provided in the protocol. Therefore, we revised the HCN emissions for FCCU in the emissions inventory used for the risk modeling runs (the results are presented in this preamble). For the 10 facilities that performed a stack test to determine HCN emissions from their FCCU, we used the actual emissions measured during the stack tests in place of the inventories originally supplied in response to the ICR. For those facilities that did not perform a stack test, but reported HCN emissions in the emissions inventory portion of the ICR, we increased the emissions of HCN by a factor of 10, assuming the original emission inventory estimates for FCCU HCN emissions were based on the default emission factor in the protocol. The emissions inventory from the ICR and documentation of the changes made to the file as a result of our review are contained in the technical memorandum entitled *Emissions Data Quality Memorandum and Development of the Risk Model Input File,* in Docket ID Number EPA–HQ–OAR–2010–0682 and available on our Web site.[4]

2. How did we estimate MACT-allowable emissions?

The available emissions data in the RTR dataset (*i.e.,* the emissions inventory) include estimates of the mass of HAP emitted during the specified annual time period. In some cases, these ''actual'' emission levels are lower than the emission levels required to comply with the MACT standards. The emissions level allowed to be emitted by the MACT standards is referred to as the ''MACT-allowable'' emissions level. We discussed the use of both MACT-allowable and actual emissions in the final Coke Oven Batteries residual risk rule (70 FR 19998–19999, April 15, 2005) and in the proposed and final Hazardous Organic NESHAP residual risk rules (71 FR 34428, June 14, 2006, and 71 FR 76609, December 21, 2006, respectively). In those previous actions, we noted that assessing the risks at the MACT-allowable level is inherently reasonable since these risks reflect the maximum level facilities could emit and still comply with national emission standards. We also explained that it is reasonable to consider actual emissions, where such data are available, in both steps of the risk analysis, in accordance with the Benzene NESHAP approach. (54 FR 38044, September 14, 1989.)

We requested allowable emissions data in the ICR. However, unlike for actual emissions, where the ICR specified the use of the *Emission Estimation Protocol for Petroleum Refineries* (available as Docket Item Number EPA–HQ–OAR–2010–0682–0060), we did not specify a method to calculate allowable emissions. As a result, in our review of these data and when comparing estimates between facilities, we found that facilities did not estimate allowable emissions consistently across the industry. In addition, facilities failed to report allowable emissions for many emission points, likely because they did not know how to translate a work practice or performance standard into an allowable emission estimate and they did not know how to speciate individual HAP where the MACT standard is based on a surrogate, such as PM or VOC. Therefore, the ICR-submitted information for allowable emissions did not include emission estimates for all HAP and sources of interest. Consequently, we used our Refinery Emissions Model (REM Model) to estimate allowable emissions. The REM model relies on model plants that vary based on throughput capacity. Each model plant contains process-specific default emission factors, adjusted for compliance with the Refinery MACT 1 and 2 emission standards.

The risks associated with the allowable emissions were evaluated using the same dispersion modeling practices, exposure assumptions and health benchmarks as the actual risks. However, because each refinery's allowable emissions were calculated by using model plants, selected based on each refinery's actual capacities and throughputs, emission estimates for point sources are not specific to a particular latitude/longitude location. Therefore, for risk modeling purposes, all allowable emissions were assumed to be released from the centroid of the facility. (Note: for fugitive (area) sources, the surface area was selected by the size of the model plant and the release point was shifted to the southwest so the center of the fugitive area was near the centroid of the facility). The emission and risk estimates for the actual emission inventory were compared to the

[3] U.S. EPA SAB. *Risk and Technology Review (RTR) Risk Assessment Methodologies: For Review by the EPA's Science Advisory board with Case Studies—MACT I Petroleum Refining Sources and Portland Cement Manufacturing,* May 2010.

[4] The emissions inventory and the revised emissions modeling file can also be found at *http://www.epa.gov/ttn/atw/petref.htm.*

allowable emissions and risk estimates. For most work practices, where allowable emission estimates are difficult to predict, the actual risk estimates were higher than those projected using the REM Model estimates. Consequently, we post-processed the two risk files, taking the higher risk estimates from the actual emissions inventory for sources subject to work practice standards, such as process equipment leaks, and sources that were not covered in the REM Model, combining them with the risk estimates from sources with more readily determined allowable emissions. The combined post-processed allowable risk estimates provide a high estimate of the risk allowed under Refinery MACT 1 and 2. The REM Model assumptions and emission estimates, along with the post-processing of risk estimate results that produced the final risk estimates for the allowable emissions, are provided in the docket (see *Refinery Emissions and Risk Estimates for Modeled ''Allowable'' Emissions* in Docket ID Number EPA–HQ–OAR–2010–0682).

3. How did we conduct dispersion modeling, determine inhalation exposures and estimate individual and population inhalation risks?

Both long-term and short-term inhalation exposure concentrations and health risks from the source categories addressed in this proposal were estimated using the Human Exposure Model (Community and Sector HEM–3 version 1.1.0). The HEM–3 performs three primary risk assessment activities: (1) Conducting dispersion modeling to estimate the concentrations of HAP in ambient air, (2) estimating long-term and short-term inhalation exposures to individuals residing within 50 kilometers (km) of the modeled sources [5], and (3) estimating individual and population-level inhalation risks using the exposure estimates and quantitative dose-response information.

The air dispersion model used by the HEM–3 model (AERMOD) is one of the EPA's preferred models for assessing pollutant concentrations from industrial facilities.[6] To perform the dispersion modeling and to develop the preliminary risk estimates, HEM–3 draws on three data libraries. The first is a library of meteorological data, which is used for dispersion calculations. This library includes 1 year (2011) of hourly surface and upper air observations for 824 meteorological stations, selected to provide coverage of the United States and Puerto Rico. A second library of United States Census Bureau census block [7] internal point locations and populations provides the basis of human exposure calculations (U.S. Census, 2010). In addition, for each census block, the census library includes the elevation and controlling hill height, which are also used in dispersion calculations. A third library of pollutant unit risk factors and other health benchmarks is used to estimate health risks. These risk factors and health benchmarks are the latest values recommended by the EPA for HAP and other toxic air pollutants. These values are available at: *http://www.epa.gov/ttn/atw/toxsource/summary.html* and are discussed in more detail later in this section.

In developing the risk assessment for chronic exposures, we used the estimated annual average ambient air concentrations of each HAP emitted by each source for which we have emissions data in the source category. The air concentrations at each nearby census block centroid were used as a surrogate for the chronic inhalation exposure concentration for all the people who reside in that census block. We calculated the MIR for each facility as the cancer risk associated with a continuous lifetime (24 hours per day, 7 days per week, and 52 weeks per year for a 70-year period) exposure to the maximum concentration at the centroid of inhabited census blocks. Individual cancer risks were calculated by multiplying the estimated lifetime exposure to the ambient concentration of each of the HAP (in micrograms per cubic meter ($\mu g/m^3$)) by its unit risk estimate (URE). The URE is an upper bound estimate of an individual's probability of contracting cancer over a lifetime of exposure to a concentration of 1 microgram of the pollutant per cubic meter of air. For residual risk assessments, we generally use URE values from the EPA's Integrated Risk Information System (IRIS). For carcinogenic pollutants without EPA IRIS values, we look to other reputable sources of cancer dose-response values, often using California EPA (CalEPA) URE values, where available. In cases where new, scientifically credible dose-response values have been developed in a manner consistent with the EPA guidelines and have undergone a peer review process similar to that used by the EPA, we may use such dose-response values in place of, or in addition to, other values, if appropriate.

We note here that several carcinogens emitted by facilities in these source categories have a mutagenic mode of action. For these compounds, we applied the age-dependent adjustment factors (ADAF) described in the EPA's *Supplemental Guidance for Assessing Susceptibility from Early-Life Exposure to Carcinogens.*[8] This adjustment has the effect of increasing the estimated lifetime risks for these pollutants by a factor of 1.6. Although only a small fraction of the total polycyclic organic matter (POM) emissions were reported as individual compounds, the EPA expresses carcinogenic potency of POM relative to the carcinogenic potency of benzo[a]pyrene, based on evidence that carcinogenic POM have the same mutagenic mode of action as does benzo[a]pyrene. The EPA's Science Policy Council recommends applying the ADAF to all carcinogenic polycyclic aromatic hydrocarbons (PAH) for which risk estimates are based on potency relative to benzo[a]pyrene. Accordingly, we have applied the ADAF to the benzo[a]pyrene-equivalent mass portion of all POM mixtures.

The EPA estimated incremental individual lifetime cancer risks associated with emissions from the facilities in the source categories as the sum of the risks for each of the carcinogenic HAP (including those classified as carcinogenic to humans, likely to be carcinogenic to humans, and suggestive evidence of carcinogenic potential [9]) emitted by the modeled sources. Cancer incidence and the distribution of individual cancer risks for the population within 50 km of the sources were also estimated for the source categories as part of this assessment by summing individual risks. A distance of 50 km is consistent with both the analysis supporting the

[5] This metric comes from the Benzene NESHAP. See 54 FR 38046, September 14, 1989.

[6] U.S. EPA. Revision to the *Guideline on Air Quality Models: Adoption of a Preferred General Purpose (Flat and Complex Terrain) Dispersion Model and Other Revisions* (70 FR 68218, November 9, 2005).

[7] A census block is the smallest geographic area for which census statistics are tabulated.

[8] *Supplemental Guidance for Assessing Susceptibility from Early-Life Exposure to Carcinogens.* Risk Assessment Forum, U.S. Environmental Protection Agency, Washington, DC. EPA/630/R–03/003F. March 2005. Available at *http://www.epa.gov/ttn/atw/childrens_supplement_final.pdf.*

[9] These classifications also coincide with the terms ''known carcinogen, probable carcinogen, and possible carcinogen,'' respectively, which are the terms advocated in the EPA's previous *Guidelines for Carcinogen Risk Assessment,* published in 1986 (51 FR 33992, September 24, 1986). Summing the risks of these individual compounds to obtain the cumulative cancer risks is an approach that was recommended by the EPA's SAB in their 2002 peer review of EPA's National Air Toxics Assessment (NATA) entitled, *NATA—Evaluating the National-scale Air Toxics Assessment 1996 Data—an SAB Advisory,* available at: *http://yosemite.epa.gov/sab/sabproduct.nsf/214C6E915BB04E14852570CA007A682C/$File/ecadv02001.pdf.*

1989 Benzene NESHAP (54 FR 38044, September 14, 1989) and the limitations of Gaussian dispersion models, including AERMOD.

To assess the risk of non-cancer health effects from chronic exposures, we summed the HQ for each of the HAP that affects a common target organ system to obtain the HI for that target organ system (or target organ-specific HI, TOSHI). The HQ is the estimated exposure divided by the chronic reference level, which is a value selected from one of several sources. First, the chronic reference level can be the EPA Reference Concentration (RfC) (*http://www.epa.gov/riskassessment/glossary.htm*), defined as ''an estimate (with uncertainty spanning perhaps an order of magnitude) of a continuous inhalation exposure to the human population (including sensitive subgroups) that is likely to be without an appreciable risk of deleterious effects during a lifetime.'' Alternatively, in cases where an RfC from the EPA's IRIS database is not available or where the EPA determines that using a value other than the RfC is appropriate, the chronic reference level can be a value from the following prioritized sources: (1) The Agency for Toxic Substances and Disease Registry Minimum Risk Level (*http://www.atsdr.cdc.gov/mrls/index.asp*), which is defined as ''an estimate of daily human exposure to a hazardous substance that is likely to be without an appreciable risk of adverse non-cancer health effects (other than cancer) over a specified duration of exposure''; (2) the CalEPA Chronic Reference Exposure Level (REL) (*http://www.oehha.ca.gov/air/hot_spots/pdf/HRAguidefinal.pdf*), which is defined as ''the concentration level (that is expressed in units of $\mu g/m^3$ for inhalation exposure and in a dose expressed in units of milligram per kilogram per day (mg/kg-day) for oral exposures), at or below which no adverse health effects are anticipated for a specified exposure duration''; or (3), as noted above, a scientifically credible dose-response value that has been developed in a manner consistent with the EPA guidelines and has undergone a peer review process similar to that used by the EPA, in place of or in concert with other values.

The EPA also evaluated screening estimates of acute exposures and risks for each of the HAP at the point of highest off-site exposure for each facility (*i.e.,* not just the census block centroids), assuming that a person is located at this spot at a time when both the peak (hourly) emissions rate and worst-case dispersion conditions occur. The acute HQ is the estimated acute exposure divided by the acute dose-response value. In each case, the EPA calculated acute HQ values using best available, short-term dose-response values. These acute dose-response values, which are described below, include the acute REL, acute exposure guideline levels (AEGL) and emergency response planning guidelines (ERPG) for 1-hour exposure durations. As discussed below, we used realistic assumptions based on knowledge of the emission point release characteristics for emission rates, and conservative assumptions for meteorology and exposure location for our acute analysis.

As described in the *CalEPA's Air Toxics Hot Spots Program Risk Assessment Guidelines, Part I, The Determination of Acute Reference Exposure Levels for Airborne Toxicants,* an acute REL value (*http://www.oehha.ca.gov/air/pdf/acuterel.pdf*) is defined as ''the concentration level at or below which no adverse health effects are anticipated for a specified exposure duration.'' *Id.* at page 2. Acute REL values are based on the most sensitive, relevant, adverse health effect reported in the peer-reviewed medical and toxicological literature. Acute REL values are designed to protect the most sensitive individuals in the population through the inclusion of margins of safety. Because margins of safety are incorporated to address data gaps and uncertainties, exceeding the REL value does not automatically indicate an adverse health impact.

AEGL values were derived in response to recommendations from the National Research Council (NRC). As described in *Standing Operating Procedures (SOP) of the National Advisory Committee on Acute Exposure Guideline Levels for Hazardous Substances* (*http://www.epa.gov/oppt/aegl/pubs/sop.pdf*),[10] ''the NRC's previous name for acute exposure levels—community emergency exposure levels—was replaced by the term AEGL to reflect the broad application of these values to planning, response, and prevention in the community, the workplace, transportation, the military, and the remediation of Superfund sites.'' *Id.* at 2.

This document also states that AEGL values ''represent threshold exposure limits for the general public and are applicable to emergency exposures ranging from 10 minutes to eight hours.'' *Id.* at 2. The document lays out the purpose and objectives of AEGL by stating that ''the primary purpose of the AEGL program and the National Advisory Committee for Acute Exposure Guideline Levels for Hazardous Substances is to develop guideline levels for once-in-a-lifetime, short-term exposures to airborne concentrations of acutely toxic, high-priority chemicals.'' *Id.* at 21. In detailing the intended application of AEGL values, the document states that ''[i]t is anticipated that the AEGL values will be used for regulatory and nonregulatory purposes by U.S. Federal and state agencies and possibly the international community in conjunction with chemical emergency response, planning and prevention programs. More specifically, the AEGL values will be used for conducting various risk assessments to aid in the development of emergency preparedness and prevention plans, as well as real-time emergency response actions, for accidental chemical releases at fixed facilities and from transport carriers.'' *Id.* at 31.

The AEGL–1 value is then specifically defined as ''the airborne concentration (expressed as ppm (parts per million) or mg/m^3 (milligrams per cubic meter)) of a substance above which it is predicted that the general population, including susceptible individuals, could experience notable discomfort, irritation, or certain asymptomatic nonsensory effects. However, the effects are not disabling and are transient and reversible upon cessation of exposure.'' *Id.* at 3. The document also notes that, ''Airborne concentrations below AEGL–1 represent exposure levels that can produce mild and progressively increasing but transient and nondisabling odor, taste, and sensory irritation or certain asymptomatic, nonsensory effects.'' *Id.* Similarly, the document defines AEGL–2 values as ''the airborne concentration (expressed as parts per million or milligrams per cubic meter) of a substance above which it is predicted that the general population, including susceptible individuals, could experience irreversible or other serious, long-lasting adverse health effects or an impaired ability to escape.'' *Id.*

ERPG values are derived for use in emergency response, as described in the American Industrial Hygiene Association's ERP Committee document entitled, ERPGS Procedures and Responsibilities, which states that, ''Emergency Response Planning Guidelines were developed for emergency planning and are intended as health-based guideline concentrations for single exposures to

[10] National Academy of Sciences (NAS), 2001. *Standing Operating Procedures for Developing Acute Exposure Levels for Hazardous Chemicals,* page 2.

chemicals.''[11] *Id.* at 1. The ERPG–1 value is defined as ''the maximum airborne concentration below which it is believed that nearly all individuals could be exposed for up to 1 hour without experiencing other than mild transient adverse health effects or without perceiving a clearly defined, objectionable odor.'' *Id.* at 2. Similarly, the ERPG–2 value is defined as ''the maximum airborne concentration below which it is believed that nearly all individuals could be exposed for up to one hour without experiencing or developing irreversible or other serious health effects or symptoms which could impair an individual's ability to take protective action.'' *Id.* at 1.

As can be seen from the definitions above, the AEGL and ERPG values include the similarly-defined severity levels 1 and 2. For many chemicals, a severity level 1 value AEGL or ERPG has not been developed because the types of effects for these chemicals are not consistent with the AEGL–1/ERPG–1 definitions; in these instances, we compare higher severity level AEGL–2 or ERPG–2 values to our modeled exposure levels to screen for potential acute concerns. When AEGL–1/ERPG–1 values are available, they are used in our acute risk assessments.

Acute REL values for 1-hour exposure durations are typically lower than their corresponding AEGL–1 and ERPG–1 values. Even though their definitions are slightly different, AEGL–1 values are often the same as the corresponding ERPG–1 values, and AEGL–2 values are often equal to ERPG–2 values. Maximum HQ values from our acute screening risk assessments typically result when basing them on the acute REL value for a particular pollutant. In cases where our maximum acute HQ value exceeds 1, we also report the HQ value based on the next highest acute dose-response value (usually the AEGL–1 and/or the ERPG–1 value).

To develop screening estimates of acute exposures in the absence of hourly emissions data, generally we first develop estimates of maximum hourly emissions rates by multiplying the average actual annual hourly emissions rates by a default factor to cover routinely variable emissions. However, for the petroleum refineries category, we incorporated additional information and process knowledge in order to better characterize acute emissions, as described below. The ICR included input fields for both annual emissions and maximum hourly emissions. The maximum hourly emission values were often left blank or appeared to be reported in units other than those required for this emissions field (pounds per hour). Consequently, instead of relying on the inadequate data provided in response to the ICR, we elected to estimate the hourly emissions based on the reported annual emissions (converted to average hourly emissions in terms of pounds per hour) and then to apply an escalation factor, considering the different types of emission sources and their inherent variability, in order to calculate maximum hourly rates. For sources with relatively continuous operations and steady state emissions, such as FCCU, sulfur recovery plants, and continuous catalytic reformers, a factor of 2 was used to estimate the maximum hourly rates from the average hourly emission rates. For sources with relatively continuous emissions, but with more variability, like storage tanks and wastewater systems, a factor of 4 was used to estimate the maximum hourly rates from the average hourly emission rates. For non-continuous emission sources with more variability, such as DCU, cyclic CRU, semi-regenerative CRU, and transfer and loading operations, the number of hours in the venting cycle and the variability of emissions expected in that cycle were used to determine the escalation factor for each emissions source. The escalation factors for these processes range from 10 to 60. For more detail regarding escalation factors and the rationale for their selection, see *Derivation of Hourly Emission Rates for Petroleum Refinery Emission Sources Used in the Acute Risk Analysis,* available in the docket for this rulemaking (Docket ID Number EPA–HQ–OAR–2010–0682).

As part of our acute risk assessment process, for cases where acute HQ values from the screening step were less than or equal to 1 (even under the conservative assumptions of the screening analysis), acute impacts were deemed negligible and no further analysis was performed. In cases where an acute HQ from the screening step was greater than 1, additional site-specific data were considered to develop a more refined estimate of the potential for acute impacts of concern. For these source categories, the data refinements employed consisted of using the site-specific facility layout to distinguish facility property from an area where the public could be exposed. These refinements are discussed more fully in the *Draft Residual Risk Assessment for the Petroleum Refining Source Sector,* which is available in the docket for this rulemaking (Docket ID Number EPA–HQ–OAR–2010–0682). Ideally, we would prefer to have continuous measurements over time to see how the emissions vary by each hour over an entire year. Having a frequency distribution of hourly emissions rates over a year would allow us to perform a probabilistic analysis to estimate potential threshold exceedances and their frequency of occurrence. Such an evaluation could include a more complete statistical treatment of the key parameters and elements adopted in this screening analysis. Recognizing that this level of data is rarely available, we instead rely on the multiplier approach.

To better characterize the potential health risks associated with estimated acute exposures to HAP, and in response to a key recommendation from the SAB's peer review of the EPA's RTR risk assessment methodologies,[12] we generally examine a wider range of available acute health metrics (*e.g.,* REL, AEGL) than we do for our chronic risk assessments. This is in response to the SAB's acknowledgement that there are generally more data gaps and inconsistencies in acute reference values than there are in chronic reference values. In some cases, *e.g.,* when Reference Value Arrays[13] for HAP have been developed, we consider additional acute values (*i.e.,* occupational and international values) to provide a more complete risk characterization.

4. How did we conduct the multipathway exposure and risk screening?

The EPA conducted a screening analysis examining the potential for significant human health risks due to exposures via routes other than inhalation (*i.e.,* ingestion). We first determined whether any sources in the source categories emitted any hazardous air pollutants known to be persistent and bio-accumulative in the environment (PB–HAP). The PB–HAP compounds or compound classes are

[11] *ERP Committee Procedures and Responsibilities.* November 1, 2006. American Industrial Hygiene Association. Available at *https://www.aiha.org/get-involved/AIHAGuidelineFoundation/EmergencyResponsePlanningGuidelines/Documents/ERP-SOPs2006.pdf.*

[12] The SAB peer review of RTR Risk Assessment Methodologies is available at: *http://yosemite.epa.gov/sab/sabproduct.nsf/4AB3966E263D943A8525771F00668381/$File/EPA-SAB-10-007-unsigned.pdf.*

[13] U.S. EPA. (2009) Chapter 2.9 Chemical Specific Reference Values for Formaldehyde in Graphical Arrays of Chemical-Specific Health Effect Reference Values for Inhalation Exposures (Final Report). U.S. Environmental Protection Agency, Washington, DC, EPA/600/R–09/061, and available on-line at *http://cfpub.epa.gov/ncea/cfm/recordisplay.cfm?deid=211003.*

identified for the screening from the EPA's Air Toxics Risk Assessment Library (available at *http://www.epa.gov/ttn/fera/risk_atra_vol1.html*).

For the petroleum refinery source categories, we identified emissions of cadmium compounds, chlorinated dibenzodioxins and furans (CDDF), lead compounds, mercury compounds, polychlorinated biphenyls (PCB), and polycylic organic matter (POM). Because PB–HAP are emitted by at least one facility, we proceeded to the second step of the evaluation. In this step, we determined whether the facility-specific emission rates of each of the emitted PB–HAP were large enough to create the potential for significant non-inhalation human health risks under reasonable worst-case conditions. To facilitate this step, we developed emissions rate screening levels for each PB–HAP using a hypothetical upper-end screening exposure scenario developed for use in conjunction with the EPA's ''Total Risk Integrated Methodology. Fate, Transport, and Ecological Exposure'' (TRIM.FaTE) model. We conducted a sensitivity analysis on the screening scenario to ensure that its key design parameters would represent the upper end of the range of possible values, such that it would represent a conservative but not impossible scenario. The facility-specific emissions rates of each of the PB–HAP were compared to their corresponding emission rate screening values to assess the potential for significant human health risks via non-inhalation pathways. We call this application of the TRIM.FaTE model the Tier I TRIM- Screen or Tier I screen.

For the purpose of developing emissions rates for our Tier I TRIM-Screen, we derived emission levels for each PB–HAP (other than lead) at which the maximum excess lifetime cancer risk would be 1-in-1 million or, for HAP that cause non-cancer health effects, the maximum HQ would be 1. If the emissions rate of any PB–HAP exceeds the Tier I screening emissions rate for any facility, we conduct a second screen, which we call the Tier II TRIM-screen or Tier II screen. In the Tier II screen, the location of each facility that exceeded the Tier I emission rate is used to refine the assumptions associated with the environmental scenario while maintaining the exposure scenario assumptions. We then adjust the risk-based Tier I screening level for each PB–HAP for each facility based on an understanding of how exposure concentrations estimated for the screening scenario change with meteorology and environmental assumptions. PB–HAP emissions that do not exceed these new Tier II screening levels are considered to pose no unacceptable risks. When facilities exceed the Tier II screening levels, it does not mean that multi-pathway impacts are significant, only that we cannot rule out that possibility based on the results of the screen. These facilities may be further evaluated for multi-pathway risks using the TRIM.FaTE model.

In evaluating the potential for multi-pathway risk from emissions of lead compounds, rather than developing a screening emissions rate for them, we compared modeled maximum estimated chronic inhalation exposures with the level of the current National Ambient Air Quality Standards (NAAQS) for lead.[14] Values below the level of the primary (health-based) lead NAAQS were considered to have a low potential for multi-pathway risk.

For further information on the multi-pathway analysis approach, see the *Draft Residual Risk Assessment for the Petroleum Refining Source Sector,* which is available in the docket for this action (Docket ID Number EPA–HQ–OAR–2010–0682).

5. How did we assess risks considering emissions control options?

In addition to assessing baseline inhalation risks and screening for potential multipathway risks, we also estimated risks considering the potential emission reductions that would be achieved by the control options under consideration. We used the same emissions inventory that we used for the risk modeling and applied emission reduction estimates for the control options we are proposing to calculate the post-control risk. We note that for storage vessels, in response to the ICR some facilities reported emissions for their tank farm or a group of storage vessels rather than for each individual storage vessel. In order to calculate emissions for each storage vessel, we used unit-specific data from the ICR to estimate the pre- and post-control emissions based on the operating characteristics and controls reported for each unit. For example, HAP emissions from each storage vessel were estimated based on the size, contents, and controls reported for that storage vessel. If additional controls would be necessary to comply with proposed requirements for storage vessels, the HAP emissions were again estimated based on the upgraded controls. The pre- and post-control emissions were summed across all storage vessels at the facility to determine a facility-specific emission reduction factor. The facility-specific emission reduction factor was then used to adjust the emissions for each of the pollutants reported for storage vessels at that facility to account for the post-control emissions. In this manner, the expected emission reductions were applied to the specific HAP and emission points in the source category dataset to develop corresponding estimates of risk and incremental risk reductions. The resulting emission file used for post-control risk analysis is available in the docket for this action (Docket ID Number EPA–HQ–OAR–2010–0682).

6. How did we conduct the environmental risk screening assessment?

a. Adverse Environmental Effect

The EPA has developed a screening approach to examine the potential for adverse environmental effects as required under section 112(f)(2)(A) of the CAA. Section 112(a)(7) of the CAA defines ''adverse environmental effect'' as ''any significant and widespread adverse effect, which may reasonably be anticipated, to wildlife, aquatic life, or other natural resources, including adverse impacts on populations of endangered or threatened species or significant degradation of environmental quality over broad areas.''

b. Environmental HAP

The EPA focuses on seven HAP, which we refer to as ''environmental HAP,'' in its screening analysis: five PB–HAP and two acid gases. The five PB–HAP are cadmium, dioxins/furans, POM, mercury (both inorganic mercury and methyl mercury) and lead compounds. The two acid gases are HCl and HF. The rationale for including these seven HAP in the environmental risk screening analysis is presented below.

HAP that persist and bioaccumulate are of particular environmental concern because they accumulate in the soil, sediment and water. The PB–HAP are

[14] In doing so, EPA notes that the legal standard for a primary NAAQS—that a standard is requisite to protect public health and provide an adequate margin of safety (CAA Section 109(b))—differs from the Section 112(f) standard (requiring among other things that the standard provide an ''ample margin of safety''). However, the lead NAAQS is a reasonable measure of determining risk acceptability (*i.e.,* the first step of the Benzene NESHAP analysis) since it is designed to protect the most susceptible group in the human population—children, including children living near major lead emitting sources. 73 FR 67002/3; 73 FR 67000/3; 73 FR 67005/1, November 12, 2008. In addition, applying the level of the primary lead NAAQS at the risk acceptability step is conservative, since that primary lead NAAQS reflects an adequate margin of safety.

taken up, through sediment, soil, water, and/or ingestion of other organisms, by plants or animals (*e.g.,* small fish) at the bottom of the food chain. As larger and larger predators consume these organisms, concentrations of the PB–HAP in the animal tissues increases as does the potential for adverse effects. The five PB–HAP we evaluate as part of our screening analysis account for 99.8 percent of all PB–HAP emissions nationally from stationary sources (on a mass basis from the 2005 National Emissions Inventory (NEI)).

In addition to accounting for almost all of the mass of PB–HAP emitted, we note that the TRIM.Fate model that we use to evaluate multipathway risk allows us to estimate concentrations of cadmium compounds, dioxins/furans, POM and mercury in soil, sediment and water. For lead compounds, we currently do not have the ability to calculate these concentrations using the TRIM.Fate model. Therefore, to evaluate the potential for adverse environmental effects from lead, we compare the estimated HEM-modeled exposures from the source category emissions of lead with the level of the secondary NAAQS for lead.[15] We consider values below the level of the secondary lead NAAQS to be unlikely to cause adverse environmental effects.

Due to their well-documented potential to cause direct damage to terrestrial plants, we include two acid gases, HCl and HF, in the environmental screening analysis. According to the 2005 NEI, HCl and HF account for about 99 percent (on a mass basis) of the total acid gas HAP emitted by stationary sources in the U.S. In addition to the potential to cause direct damage to plants, high concentrations of HF in the air have been linked to fluorosis in livestock. Air concentrations of these HAP are already calculated as part of the human multipathway exposure and risk screening analysis using the HEM3–AERMOD air dispersion model, and we are able to use the air dispersion modeling results to estimate the potential for an adverse environmental effect.

The EPA acknowledges that other HAP beyond the seven HAP discussed above may have the potential to cause adverse environmental effects. Therefore, the EPA may include other relevant HAP in its environmental risk screening in the future, as modeling science and resources allow. The EPA invites comment on the extent to which other HAP emitted by the source categories may cause adverse environmental effects. Such information should include references to peer-reviewed ecological effects benchmarks that are of sufficient quality for making regulatory decisions, as well as information on the presence of organisms located near facilities within the source categories that such benchmarks indicate could be adversely affected.

c. Ecological Assessment Endpoints and Benchmarks for PB–HAP

An important consideration in the development of the EPA's screening methodology is the selection of ecological assessment endpoints and benchmarks. Ecological assessment endpoints are defined by the ecological entity (*e.g.,* aquatic communities including fish and plankton) and its attributes (*e.g.,* frequency of mortality). Ecological assessment endpoints can be established for organisms, populations, communities or assemblages, and ecosystems.

For PB–HAP, we evaluated the following community-level ecological assessment endpoints to screen for organisms directly exposed to HAP in soils, sediment and water:

- Local terrestrial communities (*i.e.,* soil invertebrates, plants) and populations of small birds and mammals that consume soil invertebrates exposed to PB–HAP in the surface soil.
- Local benthic (*i.e.,* bottom sediment dwelling insects, amphipods, isopods and crayfish) communities exposed to PB–HAP in sediment in nearby water bodies.
- Local aquatic (water-column) communities (including fish and plankton) exposed to PB–HAP in nearby surface waters.

For PB–HAP, we also evaluated the following population-level ecological assessment endpoint to screen for indirect HAP exposures of top consumers via the bioaccumulation of HAP in food chains.

- Piscivorous (*i.e.,* fish-eating) wildlife consuming PB–HAP-contaminated fish from nearby water bodies.

For cadmium compounds, dioxins/furans, POM and mercury, we identified the available ecological benchmarks for each assessment endpoint. An ecological benchmark represents a concentration of HAP (*e.g.,* 0.77 micrograms of HAP per liter of water) that has been linked to a particular environmental effect level (*e.g.,* a no-observed-adverse-effect level (NOAEL)) through scientific study. For PB–HAP we identified, where possible, ecological benchmarks at the following effect levels:

- Probable effect level (PEL): Level above which adverse effects are expected to occur frequently.
- Lowest-observed-adverse-effect level (LOAEL): The lowest exposure level tested at which there are biologically significant increases in frequency or severity of adverse effects.
- No-observed-adverse-effect level (NOAEL): The highest exposure level tested at which there are no biologically significant increases in the frequency or severity of adverse effect.

We established a hierarchy of preferred benchmark sources to allow selection of benchmarks for each environmental HAP at each ecological assessment endpoint. In general, the EPA sources that are used at a programmatic level (*e.g.,* Office of Water, Superfund Program) were used, if available. If not, the EPA benchmarks used in regional programs (*e.g.,* Superfund) were used. If benchmarks were not available at a programmatic or regional level, we used benchmarks developed by other federal agencies (*e.g.,* NOAA) or state agencies.

Benchmarks for all effect levels are not available for all PB–HAP and assessment endpoints. In cases where multiple effect levels were available for a particular PB–HAP and assessment endpoint, we use all of the available effect levels to help us to determine whether ecological risks exist and, if so, whether the risks could be considered significant and widespread.

d. Ecological Assessment Endpoints and Benchmarks for Acid Gases

The environmental screening analysis also evaluated potential damage and reduced productivity of plants due to direct exposure to acid gases in the air. For acid gases, we evaluated the following ecological assessment endpoint:

- Local terrestrial plant communities with foliage exposed to acidic gaseous HAP in the air.

The selection of ecological benchmarks for the effects of acid gases on plants followed the same approach as for PB–HAP (*i.e.,* we examine all of the available chronic benchmarks). For HCl, the EPA identified chronic benchmark concentrations. We note that the benchmark for chronic HCl exposure to plants is greater than the reference concentration for chronic inhalation exposure for human health. This means

[15] The secondary lead NAAQS is a reasonable measure of determining whether there is an adverse environmental effect since it was established considering ''effects on soils, water, crops, vegetation, man-made materials, animals, wildlife, weather, visibility and climate, damage to and deterioration of property, and hazards to transportation, as well as effects on economic values and on personal comfort and well-being.''

that where EPA includes regulatory requirements to prevent an exceedance of the reference concentration for human health, additional analyses for adverse environmental effects of HCl would not be necessary.

For HF, EPA identified chronic benchmark concentrations for plants and evaluated chronic exposures to plants in the screening analysis. High concentrations of HF in the air have also been linked to fluorosis in livestock. However, the HF concentrations at which fluorosis in livestock occur are higher than those at which plant damage begins. Therefore, the benchmarks for plants are protective of both plants and livestock.

e. Screening Methodology

For the environmental risk screening analysis, the EPA first determined whether any petroleum refineries emitted any of the seven environmental HAP. For the petroleum refinery source categories, we identified emissions of cadmium, dioxins/furans, POM, mercury (both inorganic mercury and methyl mercury), lead, HCl and HF.

Because one or more of the seven environmental HAP evaluated are emitted by at least one petroleum refinery, we proceeded to the second step of the evaluation.

f. PB–HAP Methodology

For cadmium, mercury, POM and dioxins/furans, the environmental screening analysis consists of two tiers, while lead is analyzed differently as discussed earlier. In the first tier, we determined whether the maximum facility-specific emission rates of each of the emitted environmental HAP were large enough to create the potential for adverse environmental effects under reasonable worst-case environmental conditions. These are the same environmental conditions used in the human multipathway exposure and risk screening analysis.

To facilitate this step, TRIM.FaTE was run for each PB–HAP under hypothetical environmental conditions designed to provide conservatively high HAP concentrations. The model was set to maximize runoff from terrestrial parcels into the modeled lake, which in turn, maximized the chemical concentrations in the water, the sediments, and the fish. The resulting media concentrations were then used to back-calculate a screening threshold emission rate that corresponded to the relevant exposure benchmark concentration value for each assessment endpoint. To assess emissions from a facility, the reported emission rate for each PB–HAP was compared to the screening threshold emission rate for that PB–HAP for each assessment endpoint. If emissions from a facility do not exceed the Tier I threshold, the facility ''passes'' the screen, and therefore, is not evaluated further under the screening approach. If emissions from a facility exceed the Tier I threshold, we evaluate the facility further in Tier II.

In Tier II of the environmental screening analysis, the screening emission thresholds are adjusted to account for local meteorology and the actual location of lakes in the vicinity of facilities that did not pass the Tier I screen. The modeling domain for each facility in the Tier II analysis consists of eight octants. Each octant contains five modeled soil concentrations at various distances from the facility (5 soil concentrations × 8 octants = total of 40 soil concentrations per facility) and one lake with modeled concentrations for water, sediment and fish tissue. In the Tier II environmental risk screening analysis, the 40 soil concentration points are averaged to obtain an average soil concentration for each facility for each PB–HAP. For the water, sediment and fish tissue concentrations, the highest value for each facility for each pollutant is used. If emission concentrations from a facility do not exceed the Tier II threshold, the facility passes the screen, and is typically not evaluated further. If emissions from a facility exceed the Tier II threshold, the facility does not pass the screen and, therefore, may have the potential to cause adverse environmental effects. Such facilities are evaluated further to investigate factors such as the magnitude and characteristics of the area of exceedance.

g. Acid Gas Methodology

The environmental screening analysis evaluates the potential phytotoxicity and reduced productivity of plants due to chronic exposure to acid gases. The environmental risk screening methodology for acid gases is a single-tier screen that compares the average off-site ambient air concentration over the modeling domain to ecological benchmarks for each of the acid gases. Because air concentrations are compared directly to the ecological benchmarks, emission-based thresholds are not calculated for acid gases as they are in the ecological risk screening methodology for PB–HAP.

For purposes of ecological risk screening, EPA identifies a potential for adverse environmental effects to plant communities from exposure to acid gases when the average concentration of the HAP around a facility exceeds the LOAEL ecological benchmark. In such cases, we further investigate factors such as the magnitude and characteristics of the area of exceedance (*e.g.,* land use of exceedance area, size of exceedance area) to determine if there is an adverse environmental effect.

For further information on the environmental screening analysis approach, see section IV.C.5 of this preamble and the *Draft Residual Risk Assessment for the Petroleum Refining Source Sector,* which is available in the docket for this action (Docket ID Number EPA–HQ–OAR–2010–0682).

7. How did we conduct facility-wide assessments?

To put the source category risks in context, following the assessment approach outlined in the SAB (2010) review, we examine the risks from the entire ''facility,'' where the facility includes all HAP-emitting operations within a contiguous area and under common control. In other words, we examine the HAP emissions not only from the source category emission points of interest, but also emissions of HAP from all other emission sources at the facility for which we have data.

The emissions inventories provided in response to the ICR included emissions information for all emission sources at the facilities that are part of the refineries source categories. Generally, only a few emission sources located at refineries are not subject to either Refinery MACT 1 or 2; the most notable are boilers, process heaters and internal combustion engines, which are addressed by other MACT standards.

We analyzed risks due to the inhalation of HAP that are emitted ''facility-wide'' for the populations residing within 50 km of each facility, consistent with the methods used for the source category analysis described above. For these facility-wide risk analyses, the modeled source category risks were compared to the facility-wide risks to determine the portion of facility-wide risks that could be attributed to each of the source categories addressed in this proposal. We specifically examined the facility that was associated with the highest estimates of risk and determined the percentage of that risk attributable to the source category of interest. The *Draft Residual Risk Assessment for the Petroleum Refining Source Sector* available through the docket for this action (Docket ID Number EPA–HQ–OAR–2010–0682) provides the methodology and results of the facility-wide analyses, including all facility-wide risks and the percentage of source category contribution to facility-wide risks.

8. How did we consider uncertainties in risk assessment?

In the Benzene NESHAP we concluded that risk estimation uncertainty should be considered in our decision-making under the ample margin of safety framework. Uncertainty and the potential for bias are inherent in all risk assessments, including those performed for this proposal. Although uncertainty exists, we believe that our approach, which used conservative tools and assumptions, ensures that our decisions are health protective and environmentally protective. A brief discussion of the uncertainties in the emissions datasets, dispersion modeling, inhalation exposure estimates and dose-response relationships follows below. A more thorough discussion of these uncertainties is included in the *Draft Residual Risk Assessment for the Petroleum Refining Source Sector,* which is available in the docket for this action (Docket ID Number EPA–HQ–OAR–2010–0682).

a. Uncertainties in the Emission Datasets

Although the development of the RTR datasets involved quality assurance/quality control processes, the accuracy of emissions values will vary depending on the source of the data, the degree to which data are incomplete or missing, the degree to which assumptions made to complete the datasets are accurate, errors in emission estimates and other factors. The emission estimates considered in this analysis are annual totals for 2010, and they do not reflect short-term fluctuations during the course of a year or variations from year to year. The estimates of peak hourly emissions rates for the acute effects screening assessment were based on emission adjustment factors applied to the average annual hourly emission rates, which are intended to account for emission fluctuations due to normal facility operations.

As discussed previously, we attempted to provide a consistent framework for reporting of emissions information by developing the refinery emissions estimation protocol and requesting that refineries follow the protocol when reporting emissions inventory data in response to the ICR. This protocol, called *Emission Estimation Protocol for Petroleum Refineries,* is available in the docket for this rulemaking (Docket Item Number EPA–HQ–OAR–2010–0682–0060). Additionally, we developed our own estimates of emissions that are based on the factors provided in the protocol and the REM Model. We developed emission estimates based on refinery unit capacities, which also provided an estimate of allowable emissions. We then conducted risk modeling using REM Model estimates and by locating emissions at the centroid of each refinery in an attempt to understand the risk associated with emissions from each refinery. Therefore, even if there were errors in the emission inventories reported in the ICR, as was the case in many instances, emissions for those facilities were also modeled using the protocol emission factors. The risk modeling of allowable emissions based on emission factors and unit capacities did not result in significantly different risk results than the actual emissions modeling runs. Results of the allowable emissions risk estimates are provided in the *Draft Residual Risk Assessment for the Petroleum Refining Source Sector,* which is available in Docket ID Number EPA–HQ–OAR–2010–0682.

b. Uncertainties in Dispersion Modeling

We recognize there is uncertainty in ambient concentration estimates associated with any model, including the EPA's recommended regulatory dispersion model, AERMOD. In using a model to estimate ambient pollutant concentrations, the user chooses certain options to apply. For RTR assessments, we select some model options that have the potential to overestimate ambient air concentrations (*e.g.,* not including plume depletion or pollutant transformation). We select other model options that have the potential to underestimate ambient impacts (*e.g.,* not including building downwash). Other options that we select have the potential to either under- or overestimate ambient levels (*e.g.,* meteorology and receptor locations). On balance, considering the directional nature of the uncertainties commonly present in ambient concentrations estimated by dispersion models, the approach we apply in the RTR assessments should yield unbiased estimates of ambient HAP concentrations.

c. Uncertainties in Inhalation Exposure

The EPA did not include the effects of human mobility on exposures in the assessment. Specifically, short-term mobility and long-term mobility between census blocks in the modeling domain were not considered.[16] The approach of not considering short- or long-term population mobility does not bias the estimate of the theoretical MIR (by definition), nor does it affect the estimate of cancer incidence because the total population number remains the same. It does, however, affect the shape of the distribution of individual risks across the affected population, shifting it toward higher estimated individual risks at the upper end and reducing the number of people estimated to be at lower risks, thereby increasing the estimated number of people at specific high-risk levels (*e.g.,* 1-in-10 thousand or 1-in-1 million).

In addition, the assessment predicted the chronic exposures at the centroid of each populated census block as surrogates for the exposure concentrations for all people living in that block. Using the census block centroid to predict chronic exposures tends to over-predict exposures for people in the census block who live further from the facility and under-predict exposures for people in the census block who live closer to the facility. Thus, using the census block centroid to predict chronic exposures may lead to a potential understatement or overstatement of the true maximum impact, but is an unbiased estimate of average risk and incidence. We reduce this uncertainty by analyzing large census blocks near facilities using aerial imagery and adjusting the location of the block centroid to better represent the population in the block, as well as adding additional receptor locations where the block population is not well represented by a single location.

The assessment evaluates the cancer inhalation risks associated with pollutant exposures over a 70-year period, which is the assumed lifetime of an individual. In reality, both the length of time that modeled emission sources at facilities actually operate (*i.e.,* more or less than 70 years) and the domestic growth or decline of the modeled industry (*i.e.,* the increase or decrease in the number or size of domestic facilities) will influence the future risks posed by a given source or source category. Depending on the characteristics of the industry, these factors will, in most cases, result in an overestimate both in individual risk levels and in the total estimated number of cancer cases. However, in the unlikely scenario where a facility maintains, or even increases, its emissions levels over a period of more than 70 years, residents live beyond 70 years at the same location, and the residents spend most of their days at that location, then the cancer inhalation risks could potentially be underestimated. However, annual cancer incidence estimates from exposures to emissions from these

[16] Short-term mobility is movement from one micro-environment to another over the course of hours or days. Long-term mobility is movement from one residence to another over the course of a lifetime.

sources would not be affected by the length of time an emissions source operates.

The exposure estimates used in these analyses assume chronic exposures to ambient (outdoor) levels of pollutants. Because most people spend the majority of their time indoors, actual exposures may not be as high, depending on the characteristics of the pollutants modeled. For many of the HAP, indoor levels are roughly equivalent to ambient levels, but for very reactive pollutants or larger particles, indoor levels are typically lower. This factor has the potential to result in an overestimate of 25 to 30 percent of exposures.[17]

In addition to the uncertainties highlighted above, there are several factors specific to the acute exposure assessment that should be highlighted. The accuracy of an acute inhalation exposure assessment depends on the simultaneous occurrence of independent factors that may vary greatly, such as hourly emissions rates, meteorology and human activity patterns. In this assessment, we assume that individuals remain for 1 hour at the point of maximum ambient concentration as determined by the co-occurrence of peak emissions and worst-case meteorological conditions. These assumptions would tend to be worst-case actual exposures as it is unlikely that a person would be located at the point of maximum exposure during the time when peak emissions and worst-case meteorological conditions occur simultaneously.

d. Uncertainties in Dose-Response Relationships

There are uncertainties inherent in the development of the dose-response values used in our risk assessments for cancer effects from chronic exposures and non-cancer effects from both chronic and acute exposures. Some uncertainties may be considered quantitatively, and others generally are expressed in qualitative terms. We note as a preface to this discussion a point on dose-response uncertainty that is brought out in the EPA's *2005 Cancer Guidelines*; namely, that ''the primary goal of EPA actions is protection of human health; accordingly, as an Agency policy, risk assessment procedures, including default options that are used in the absence of scientific data to the contrary, should be health protective'' (*EPA 2005 Cancer Guidelines,* pages 1–7). This is the approach followed here as summarized in the next several paragraphs. A complete detailed discussion of uncertainties and variability in dose-response relationships is given in the *Draft Residual Risk Assessment for the Petroleum Refining Source Sector,* which is available in the docket for this action (Docket ID Number EPA–HQ–OAR–2010–0682).

Cancer URE values used in our risk assessments are those that have been developed to generally provide an upper bound estimate of risk. That is, they represent a ''plausible upper limit to the true value of a quantity'' (although this is usually not a true statistical confidence limit).[18] In some circumstances, the true risk could be as low as zero; however, in other circumstances, the risk could also be greater.[19] When developing an upper-bound estimate of risk and to provide risk values that do not underestimate risk, health-protective default approaches are generally used. To err on the side of ensuring adequate health-protection, the EPA typically uses the upper bound estimates rather than lower bound or central tendency estimates in our risk assessments, an approach that may have limitations for other uses (*e.g.,* priority-setting or expected benefits analysis).

Chronic non-cancer RfC and reference dose (RfD) values represent chronic exposure levels that are intended to be health-protective levels. Specifically, these values provide an estimate (with uncertainty spanning perhaps an order of magnitude) of a continuous inhalation exposure (RfC) or a daily oral exposure (RfD) to the human population (including sensitive subgroups) that is likely to be without an appreciable risk of deleterious effects during a lifetime. To derive values that are intended to be ''without appreciable risk,'' the methodology relies upon an uncertainty factor (UF) approach (U.S. EPA, 1993, 1994) which considers uncertainty, variability and gaps in the available data. The UF are applied to derive reference values that are intended to protect against appreciable risk of deleterious effects. The UF are commonly default values,[20] *e.g.,* factors of 10 or 3, used in the absence of compound-specific data; where data are available, UF may also be developed using compound-specific information. When data are limited, more assumptions are needed and more UF are used. Thus, there may be a greater tendency to overestimate risk in the sense that further study might support development of reference values that are higher (*i.e.,* less potent) because fewer default assumptions are needed. However, for some pollutants, it is possible that risks may be underestimated.

While collectively termed ''UF,'' these factors account for a number of different quantitative considerations when using observed animal (usually rodent) or human toxicity data in the development of the RfC. The UF are intended to account for: (1) Variation in susceptibility among the members of the human population (*i.e.,* inter-individual variability); (2) uncertainty in extrapolating from experimental animal data to humans (*i.e.,* interspecies differences); (3) uncertainty in extrapolating from data obtained in a study with less-than-lifetime exposure (*i.e.,* extrapolating from sub-chronic to chronic exposure); (4) uncertainty in extrapolating the observed data to obtain an estimate of the exposure associated with no adverse effects; and (5) uncertainty when the database is incomplete or there are problems with the applicability of available studies.

Many of the UF used to account for variability and uncertainty in the development of acute reference values are quite similar to those developed for chronic durations, but they more often use individual UF values that may be less than 10. The UF are applied based on chemical-specific or health effect-specific information (*e.g.,* simple irritation effects do not vary appreciably between human individuals, hence a value of 3 is typically used), or based on the purpose for the reference value (see the following paragraph). The UF

[17] U.S. EPA. *National-Scale Air Toxics Assessment for 1996.* (EPA 453/R–01–003; January 2001; page 85.)

[18] IRIS glossary (*http://ofmpub.epa.gov/sor_internet/registry/termreg/searchandretrieve/glossariesandkeywordlists/search.do?details=&glossaryName=IRIS%20Glossary*).

[19] An exception to this is the URE for benzene, which is considered to cover a range of values, each end of which is considered to be equally plausible, and which is based on maximum likelihood estimates.

[20] According to the NRC report, *Science and Judgment in Risk Assessment* (NRC, 1994) ''[Default] options are generic approaches, based on general scientific knowledge and policy judgment, that are applied to various elements of the risk assessment process when the correct scientific model is unknown or uncertain.'' The 1983 NRC report, *Risk Assessment in the Federal Government: Managing the Process,* defined default option as ''the option chosen on the basis of risk assessment policy that appears to be the best choice in the absence of data to the contrary'' (NRC, 1983a, p. 63). Therefore, default options are not rules that bind the Agency; rather, the Agency may depart from them in evaluating the risks posed by a specific substance when it believes this to be appropriate. In keeping with EPA's goal of protecting public health and the environment, default assumptions are used to ensure that risk to chemicals is not underestimated (although defaults are not intended to overtly overestimate risk). See EPA, 2004, *An Examination of EPA Risk Assessment Principles and Practices,* EPA/100/B–04/001 available at: *http://www.epa.gov/osa/pdfs/ratf-final.pdf.*

applied in acute reference value derivation include: (1) Heterogeneity among humans; (2) uncertainty in extrapolating from animals to humans; (3) uncertainty in lowest observable adverse effect (exposure) level to no observed adverse effect (exposure) level adjustments; and (4) uncertainty in accounting for an incomplete database on toxic effects of potential concern. Additional adjustments are often applied to account for uncertainty in extrapolation from observations at one exposure duration (*e.g.,* 4 hours) to derive an acute reference value at another exposure duration (*e.g.,* 1 hour).

Not all acute reference values are developed for the same purpose and care must be taken when interpreting the results of an acute assessment of human health effects relative to the reference value or values being exceeded. Where relevant to the estimated exposures, the lack of short-term dose-response values at different levels of severity should be factored into the risk characterization as potential uncertainties.

Although every effort is made to identify appropriate human health effect dose-response assessment values for all pollutants emitted by the sources in this risk assessment, some HAP emitted by these source categories are lacking dose-response assessments. Accordingly, these pollutants cannot be included in the quantitative risk assessment, which could result in quantitative estimates understating HAP risk. To help to alleviate this potential underestimate, where we conclude similarity with a HAP for which a dose-response assessment value is available, we use that value as a surrogate for the assessment of the HAP for which no value is available. To the extent use of surrogates indicates appreciable risk, we may identify a need to increase priority for new IRIS assessment of that substance. We additionally note that, generally speaking, HAP of greatest concern due to environmental exposures and hazard are those for which dose-response assessments have been performed, reducing the likelihood of understating risk. Further, HAP not included in the quantitative assessment are assessed qualitatively and considered in the risk characterization that informs the risk management decisions, including with regard to consideration of HAP reductions achieved by various control options.

For a group of compounds that are unspeciated (*e.g.,* glycol ethers), we conservatively use the most protective reference value of an individual compound in that group to estimate risk. Similarly, for an individual compound in a group (*e.g.,* ethylene glycol diethyl ether) that does not have a specified reference value, we also apply the most protective reference value from the other compounds in the group to estimate risk.

e. Uncertainties in the Multipathway Assessment

For each source category, we generally rely on site-specific levels of PB-HAP emissions to determine whether a refined assessment of the impacts from multipathway exposures is necessary. This determination is based on the results of a two-tiered screening analysis that relies on the outputs from models that estimate environmental pollutant concentrations and human exposures for four PB-HAP. Two important types of uncertainty associated with the use of these models in RTR risk assessments and inherent to any assessment that relies on environmental modeling are model uncertainty and input uncertainty.[21]

Model uncertainty concerns whether the selected models are appropriate for the assessment being conducted and whether they adequately represent the actual processes that might occur for that situation. An example of model uncertainty is the question of whether the model adequately describes the movement of a pollutant through the soil. This type of uncertainty is difficult to quantify. However, based on feedback received from previous EPA SAB reviews and other reviews, we are confident that the models used in the screen are appropriate and state-of-the-art for the multipathway risk assessments conducted in support of RTR.

Input uncertainty is concerned with how accurately the models have been configured and parameterized for the assessment at hand. For Tier I of the multipathway screen, we configured the models to avoid underestimating exposure and risk. This was accomplished by selecting upper-end values from nationally-representative data sets for the more influential parameters in the environmental model, including selection and spatial configuration of the area of interest, lake location and size, meteorology, surface water and soil characteristics and structure of the aquatic food web. We also assume an ingestion exposure scenario and values for human exposure factors that represent reasonable maximum exposures.

In Tier II of the multipathway assessment, we refine the model inputs to account for meteorological patterns in the vicinity of the facility versus using upper-end national values and we identify the actual location of lakes near the facility rather than the default lake location that we apply in Tier I. By refining the screening approach in Tier II to account for local geographical and meteorological data, we decrease the likelihood that concentrations in environmental media are overestimated, thereby increasing the usefulness of the screen. The assumptions and the associated uncertainties regarding the selected ingestion exposure scenario are the same for Tier I and Tier II.

For both Tiers I and II of the multipathway assessment, our approach to addressing model input uncertainty is generally cautious. We choose model inputs from the upper end of the range of possible values for the influential parameters used in the models, and we assume that the exposed individual exhibits ingestion behavior that would lead to a high total exposure. This approach reduces the likelihood of not identifying high risks for adverse impacts.

Despite the uncertainties, when individual pollutants or facilities do screen out, we are confident that the potential for adverse multipathway impacts on human health is very low. On the other hand, when individual pollutants or facilities do not screen out, it does not mean that multipathway impacts are significant, only that we cannot rule out that possibility and that a refined multipathway analysis for the site might be necessary to obtain a more accurate risk characterization for the source categories.

For further information on uncertainties and the Tier I and II screening methods, refer to the risk document Appendix 4, *Technical Support Document for TRIM-Based Multipathway Tiered Screening Methodology for RTR.*

f. Uncertainties in the Environmental Risk Screening Assessment

For each source category, we generally rely on site-specific levels of environmental HAP emissions to perform an environmental screening assessment. The environmental screening assessment is based on the outputs from models that estimate environmental HAP concentrations. The same models, specifically the TRIM.FaTE multipathway model and the AERMOD air dispersion model, are used to estimate environmental HAP

[21] In the context of this discussion, the term ''uncertainty'' as it pertains to exposure and risk encompasses both *variability* in the range of expected inputs and screening results due to existing spatial, temporal, and other factors, as well as *uncertainty* in being able to accurately estimate the true result.

concentrations for both the human multipathway screening analysis and for the environmental screening analysis. Therefore, both screening assessments have similar modeling uncertainties.

Two important types of uncertainty associated with the use of these models in RTR environmental screening assessments—and inherent to any assessment that relies on environmental modeling—are model uncertainty and input uncertainty.[22]

Model uncertainty concerns whether the selected models are appropriate for the assessment being conducted and whether they adequately represent the movement and accumulation of environmental HAP emissions in the environment. For example, does the model adequately describe the movement of a pollutant through the soil? This type of uncertainty is difficult to quantify. However, based on feedback received from previous EPA SAB reviews and other reviews, we are confident that the models used in the screen are appropriate and state-of-the-art for the environmental risk assessments conducted in support of our RTR analyses.

Input uncertainty is concerned with how accurately the models have been configured and parameterized for the assessment at hand. For Tier I of the environmental screen for PB–HAP, we configured the models to avoid underestimating exposure and risk to reduce the likelihood that the results indicate the risks are lower than they actually are. This was accomplished by selecting upper-end values from nationally-representative data sets for the more influential parameters in the environmental model, including selection and spatial configuration of the area of interest, the location and size of any bodies of water, meteorology, surface water and soil characteristics and structure of the aquatic food web. In Tier I, we used the maximum facility-specific emissions for cadmium compounds, dioxins/furans, POM, and mercury and each of the media when comparing to ecological benchmarks. This is consistent with the conservative design of Tier I of the screen. In Tier II of the environmental screening analysis for PB–HAP, we refine the model inputs to account for meteorological patterns in the vicinity of the facility versus using upper-end national values, and we identify the locations of water bodies near the facility location. By refining the screening approach in Tier II to account for local geographical and meteorological data, we decrease the likelihood that concentrations in environmental media are overestimated, thereby increasing the usefulness of the screen. To better represent widespread impacts, the modeled soil concentrations are averaged in Tier II to obtain one average soil concentration value for each facility and for each PB–HAP. For PB–HAP concentrations in water, sediment and fish tissue, the highest value for each facility for each pollutant is used.

For the environmental screening assessment for acid gases, we employ a single-tiered approach. We use the modeled air concentrations and compare those with ecological benchmarks.

For both Tiers I and II of the environmental screening assessment, our approach to addressing model input uncertainty is generally cautious. We choose model inputs from the upper end of the range of possible values for the influential parameters used in the models, and we assume that the exposed organism (*e.g.,* invertebrate, fish) exhibits ingestion behavior that would lead to a high total exposure. This approach reduces the likelihood of not identifying potential risks for adverse environmental impacts.

Uncertainty also exists in the ecological benchmarks for the environmental risk screening analysis. We established a hierarchy of preferred benchmark sources to allow selection of benchmarks for each environmental HAP at each ecological assessment endpoint. In general, EPA benchmarks used at a programmatic level (*e.g.,* Office of Water, Superfund Program) were used if available. If not, we used EPA benchmarks used in regional programs (*e.g.,* Superfund). If benchmarks were not available at a programmatic or regional level, we used benchmarks developed by other agencies (*e.g.,* NOAA) or by state agencies.

In all cases (except for lead, which was evaluated through a comparison to the NAAQS), we searched for benchmarks at the following three effect levels, as described in section III.A.6 of this preamble:

1. A no-effect level (*i.e.,* NOAEL).
2. Threshold-effect level (*i.e.,* LOAEL).
3. Probable effect level (*i.e.,* PEL).

For some ecological assessment endpoint/environmental HAP combinations, we could identify benchmarks for all three effect levels, but for most, we could not. In one case, where different agencies derived significantly different numbers to represent a threshold for effect, we included both. In several cases, only a single benchmark was available. In cases where multiple effect levels were available for a particular PB–HAP and assessment endpoint, we used all of the available effect levels to help us to determine whether risk exists and if the risks could be considered significant and widespread.

The EPA evaluated the following seven HAP in the environmental risk screening assessment: Cadmium, dioxins/furans, POM, mercury (both inorganic mercury and methyl mercury), lead compounds, HCl and HF. These seven HAP represent pollutants that can cause adverse impacts for plants and animals either through direct exposure to HAP in the air or through exposure to HAP that is deposited from the air onto soils and surface waters. These seven HAP also represent those HAP for which we can conduct a meaningful environmental risk screening assessment. For other HAP not included in our screening assessment, the model has not been parameterized such that it can be used for that purpose. In some cases, depending on the HAP, we may not have appropriate multipathway models that allow us to predict the concentration of that pollutant. The EPA acknowledges that other HAP beyond the seven HAP that we are evaluating may have the potential to cause adverse environmental effects and, therefore, the EPA may evaluate other relevant HAP in the future, as modeling science and resources allow.

Further information on uncertainties and the Tier I and II environmental screening methods is provided in Appendix 5 of the document *Technical Support Document for TRIM-Based Multipathway Tiered Screening Methodology for RTR: Summary of Approach and Evaluation.* Also, see the *Draft Residual Risk Assessment for the Petroleum Refining Source Sector,* available in the docket for this action (Docket ID Number EPA–HQ–OAR–2010–0682).

B. How did we consider the risk results in making decisions for this proposal?

As discussed in section II.A.1 of this preamble, in evaluating and developing standards under CAA section 112(f)(2), we apply a two-step process to address residual risk. In the first step, the EPA determines whether risks are acceptable. This determination ''considers all health information, including risk estimation uncertainty, and includes a presumptive limit on maximum individual lifetime

[22] In the context of this discussion, the term ''uncertainty,'' as it pertains to exposure and risk assessment, encompasses both variability in the range of expected inputs and screening results due to existing spatial, temporal, and other factors, as well as uncertainty in being able to accurately estimate the true result.

[cancer] risk (MIR)[23] of approximately [1-in-10 thousand] [*i.e.,* 100-in-1 million].'' 54 FR 38045, September 14, 1989. If risks are unacceptable, the EPA must determine the emissions standards necessary to bring risks to an acceptable level without considering costs. In the second step of the process, the EPA considers whether the emissions standards provide an ample margin of safety ''in consideration of all health information, including the number of persons at risk levels higher than approximately 1-in-1 million, as well as other relevant factors, including costs and economic impacts, technological feasibility, and other factors relevant to each particular decision.'' *Id.* The EPA must promulgate tighter emission standards if necessary to provide an ample margin of safety.

In past residual risk actions, the EPA considered a number of human health risk metrics associated with emissions from the categories under review, including the MIR, the number of persons in various risk ranges, cancer incidence, the maximum non-cancer HI and the maximum acute non-cancer hazard. *See, e.g.,* 72 FR 25138, May 3, 2007; 71 FR 42724, July 27, 2006. The EPA considered this health information for both actual and allowable emissions. *See, e.g.,* 75 FR 65068, October 21, 2010, and 75 FR 80220, December 21, 2010). The EPA also discussed risk estimation uncertainties and considered the uncertainties in the determination of acceptable risk and ample margin of safety in these past actions. The EPA considered this same type of information in support of this action.

The agency is considering these various measures of health information to inform our determinations of risk acceptability and ample margin of safety under CAA section 112(f). As explained in the Benzene NESHAP, ''the first step of judgment on acceptability cannot be reduced to any single factor,'' and thus ''[t]he Administrator believes that the acceptability of risk under [previous] section 112 is best judged on the basis of a broad set of health risk measures and information.'' 54 FR 38046, September 14, 1989. Similarly, with regard to making the ample margin of safety determination, ''the Agency again considers all of the health risk and other health information considered in the first step. Beyond that information, additional factors relating to the appropriate level of control will also be considered, including cost and economic impacts of controls, technological feasibility, uncertainties, and any other relevant factors.'' *Id.*

The Benzene NESHAP approach provides flexibility regarding factors the EPA may consider in making determinations and how the EPA may weigh those factors for each source category. In responding to comment on our policy under the Benzene NESHAP, the EPA explained that:

> [t]he policy chosen by the Administrator permits consideration of multiple measures of health risk. Not only can the MIR figure be considered, but also incidence, the presence of non-cancer health effects, and the uncertainties of the risk estimates. In this way, the effect on the most exposed individuals can be reviewed as well as the impact on the general public. These factors can then be weighed in each individual case. This approach complies with the *Vinyl Chloride* mandate that the Administrator ascertain an acceptable level of risk to the public by employing [her] expertise to assess available data. It also complies with the Congressional intent behind the CAA, which did not exclude the use of any particular measure of public health risk from the EPA's consideration with respect to CAA section 112 regulations, and thereby implicitly permits consideration of any and all measures of health risk which the Administrator, in [her] judgment, believes are appropriate to determining what will 'protect the public health.'

See 54 FR at 38057, September 14, 1989. Thus, the level of the MIR is only one factor to be weighed in determining acceptability of risks. The Benzene NESHAP explained that ''an MIR of approximately one in 10 thousand should ordinarily be the upper end of the range of acceptability. As risks increase above this benchmark, they become presumptively less acceptable under CAA section 112, and would be weighed with the other health risk measures and information in making an overall judgment on acceptability. Or, the Agency may find, in a particular case, that a risk that includes MIR less than the presumptively acceptable level is unacceptable in the light of other health risk factors.'' *Id.* at 38045. Similarly, with regard to the ample margin of safety analysis, the EPA stated in the Benzene NESHAP that: ''EPA believes the relative weight of the many factors that can be considered in selecting an ample margin of safety can only be determined for each specific source category. This occurs mainly because technological and economic factors (along with the health-related factors) vary from source category to source category.'' *Id.* at 38061. We also consider the uncertainties associated with the various risk analyses, as discussed earlier in this preamble, in our determinations of acceptability and ample margin of safety.

The EPA notes that it has not considered certain health information to date in making residual risk determinations. At this time, we do not attempt to quantify those HAP risks that may be associated with emissions from other facilities that do not include the source categories in question, mobile source emissions, natural source emissions, persistent environmental pollution or atmospheric transformation in the vicinity of the sources in these categories.

The agency understands the potential importance of considering an individual's total exposure to HAP in addition to considering exposure to HAP emissions from the source category and facility. We recognize that such consideration may be particularly important when assessing non-cancer risks, where pollutant-specific health reference levels (*e.g.,* RfCs) are based on the assumption that thresholds exist for adverse health effects. For example, the agency recognizes that, although exposures attributable to emissions from a source category or facility alone may not indicate the potential for increased risk of adverse non-cancer health effects in a population, the exposures resulting from emissions from the facility in combination with emissions from all of the other sources (*e.g.,* other facilities) to which an individual is exposed may be sufficient to result in increased risk of adverse non-cancer health effects. In May 2010, the SAB advised the EPA ''that RTR assessments will be most useful to decision makers and communities if results are presented in the broader context of aggregate and cumulative risks, including background concentrations and contributions from other sources in the area.''[24]

In response to the SAB recommendations, the EPA is incorporating cumulative risk analyses into its RTR risk assessments, including those reflected in this proposal. The agency is: (1) Conducting facility-wide assessments, which include source category emission points as well as other emission points within the facilities; (2) considering sources in the same category whose emissions result in exposures to the same individuals; and (3) for some persistent and

[23] Although defined as ''maximum individual risk,'' MIR refers only to cancer risk. MIR, one metric for assessing cancer risk, is the estimated risk were an individual exposed to the maximum level of a pollutant for a lifetime.

[24] EPA's responses to this and all other key recommendations of the SAB's advisory on RTR risk assessment methodologies (which is available at: *http://yosemite.epa.gov/sab/sabproduct.nsf/4AB3966E263D943A8525771F00668381/$File/EPA-SAB-10-007-unsigned.pdf*) are outlined in a memo to this rulemaking docket from David Guinnup entitled, *EPA's Actions in Response to the Key Recommendations of the SAB Review of RTR Risk Assessment Methodologies.*

bioaccumulative pollutants, analyzing the ingestion route of exposure. In addition, the RTR risk assessments have always considered aggregate cancer risk from all carcinogens and aggregate non-cancer hazard indices from all non-carcinogens affecting the same target organ system.

Although we are interested in placing source category and facility-wide HAP risks in the context of *total* HAP risks from all sources combined in the vicinity of each source, we are concerned about the uncertainties of doing so. Because we have not conducted in-depth studies of risks due to emissions from sources other those at refineries subject to this RTR review, such estimates of total HAP risks would have significantly greater associated uncertainties than the source category or facility-wide estimates. Such aggregate or cumulative assessments would compound those uncertainties, making the assessments too unreliable.

C. How did we perform the technology review?

Our technology review focused on the identification and evaluation of developments in practices, processes and control technologies that have occurred since the MACT standards were promulgated. Where we identified such developments, in order to inform our decision of whether it is ''necessary'' to revise the emissions standards, we analyzed the technical feasibility of applying these developments, and the estimated costs, energy implications, non-air environmental impacts, as well as considering the emission reductions. We also considered the appropriateness of applying controls to new sources versus retrofitting existing sources.

Based on our analyses of the available data and information, we identified potential developments in practices, processes and control technologies. For this exercise, we considered any of the following to be a ''development'':

- Any add-on control technology or other equipment that was not identified and considered during development of the original MACT standards.
- Any improvements in add-on control technology or other equipment (that were identified and considered during development of the original MACT standards) that could result in additional emissions reduction.
- Any work practice or operational procedure that was not identified or considered during development of the original MACT standards.
- Any process change or pollution prevention alternative that could be broadly applied to the industry and that was not identified or considered during development of the original MACT standards.
- Any significant changes in the cost (including cost effectiveness) of applying controls (including controls the EPA considered during the development of the original MACT standards).

We reviewed a variety of data sources in our investigation of potential practices, processes or controls to consider. Among the sources we reviewed were the NESHAP for various industries that were promulgated since the MACT standards being reviewed in this action. We reviewed the regulatory requirements and/or technical analyses associated with these regulatory actions to identify any practices, processes and control technologies considered in these efforts that could be applied to emission sources subject to Refinery MACT 1 or 2, as well as the costs, non-air impacts and energy implications associated with the use of these technologies. Additionally, we requested information from facilities as described in section II.C of this preamble. Finally, we reviewed information from other sources, such as state and/or local permitting agency databases and industry-supported databases.

IV. Analytical Results and Proposed Decisions

A. What actions are we taking pursuant to CAA sections 112(d)(2) and 112(d)(3)?

In this action, we are proposing the following revisions to the Refinery MACT 1 and 2 standards pursuant to CAA section 112(d)(2) and (3) [25]: (1) Adding MACT standards for DCU decoking operations; (2) revising the CRU purge vent pressure exemption; (3) adding operational requirements for flares used as air pollution control devices (APCD) in Refinery MACT 1 and 2; and (4) adding requirements and clarifications for vent control bypasses in Refinery MACT 1. The results and proposed decisions based on the analyses performed pursuant to CAA section 112(d)(2) and (3) are presented below.

[25] The EPA has authority under CAA section 112(d)(2) and (d)(3) to set MACT standards for previously unregulated emission points. EPA also retains the discretion to revise a MACT standard under the authority of Section 112(d)(2) and (3), see Portland Cement Ass'n v. EPA, 665 F.3d 177, 189 (D.C. Cir. 2011), such as when it identifies an error in the original standard. See also *Medical Waste Institute* v. *EPA,* 645 F. 3d at 426 (upholding EPA action establishing MACT floors, based on post-compliance data, when originally-established floors were improperly established).

1. Delayed Coking Units

a. Description of Delayed Coker Process Operations and Emissions

We are proposing to establish MACT standards specific to the DCU pursuant to CAA section 112(d)(2) and (3). The DCU uses thermal cracking to upgrade heavy feedstocks and to produce petroleum coke. Unlike most other refinery operations that are continuous, the DCU operates in a semi-batch system. Most DCU consist of a large process heater, two or more coking drums, and a single product distillation column. The DCU feed is actually fed to the unit's distillation column. Bottoms from the distillation column are heated to near cracking temperatures and the resulting heavy oil is fed to one of the coking drums. As the cracking reactions occur, coke is produced in the drum and begins to fill the drum with sponge-like solid coke material. During this process, the DCU is a closed system, with the produced gas streams piped to the unit's distillation column for product recovery.

When the first coke drum becomes filled with coke, the feed is diverted to the second coke drum and processing continues via the second coke drum. The full coke drum, which is no longer receiving oil feed, is taken through a number of steps, collectively referred to as decoking operations, to remove the coke from the drum and prepare the drum for subsequent oil feed processing. The decoking steps include: purging, cooling/quenching, venting, draining, deheading, and coke cutting. A description of these steps and the potential emissions from these activities are provided in the next several paragraphs. Once the coke is removed, the vessel is re-sealed (*i.e.,* the drain valve is closed and the ''head'' is re-attached), pressure tested (typically using steam), purged to remove oxygen, then slowly heated to processing temperatures so it can go back on-line. When the second coke drum becomes filled with coke, feed is diverted back to the first coke drum and the second drum is then decoked. In this manner, the DCU allows for continuous processing of oil even though the individual coke drums operate in cyclical batch fashion.

The first step in decoking operations is to purge the coke drum with steam. This serves to cool the coke bed and to flush oil or reaction products from the coke bed. The steam purge is initially sent to the product distillation column and then diverted to the unit's blowdown system. The blowdown system serves to condense the steam and other liquids entrained in the

steam. Nearly all DCU operate a ''closed blowdown'' system, such that uncondensed gases from the blowdown system are sent to the product distillation column or the facility's light gas plant, recovered as fuel gas, or combusted in a flare. In an open blowdown system, these uncondensed gases would be vented directly to atmosphere. The DCU vent discharge to the blowdown system is specifically defined in Refinery MACT 1 as the ''delayed coker vent.''

The next step in the decoking process is cooling/quenching the coke drum and its contents via the addition of water, commonly referred to as quench water, at the bottom of the coke drum. The water added to the vessel quickly turns to steam due to the high temperature of the coke bed. The water/steam helps to further cool the coke bed and ''quench'' any residual coking reactions that may still occur within the hot coke bed. As with the steam purge, steam off-gas from the cooling/quenching cycle is recovered in the unit's blowdown system and this vent discharge is specifically defined in Refinery MACT 1 as the ''delayed coker vent.''

After several hours, the coke drum is sufficiently cooled so that the water level in the drum can be raised to entirely cover the coke bed. Although water covers the coke bed, the upper portion of the coke bed may still be well above 212 degrees Fahrenheit (°F) and will continue to generate steam. In fact, since the coke drum vessel pressure is greater than atmospheric pressure, the equilibrium boiling point of water in the vessel is greater than 212 °F. Therefore, the water at the top of the coke drum is typically well above 212 °F (superheated water). As the coke drum and its contents continue to cool from the evaporative cooling effect of the steam generation, the steam generation rate and the pressure within the vessel will decrease.

Owners or operators of DCU may use different indicators or set points to determine when the system has cooled sufficiently to move to the venting step; however, one of the most common indicators monitored is the pressure of the coke drum vessel (or steam vent line just above the coke drum, where steam exits the coke drum en route to the blowdown system). When the vessel has cooled sufficiently (*e.g.,* when the coke drum vessel pressure reaches the desired set point), valves are opened to allow the steam generated in the coke drum to vent directly to the atmosphere rather than the closed blowdown system. This vent is commonly referred to as the ''coker steam vent'' and is typically the first direct atmospheric emission release during the decoking operations when an enclosed blowdown system is used. While this vent gas contains predominately steam, methane and ethane, a variety of HAP are also emitted with this steam. These HAP include light aromatics (*e.g.,* benzene, toluene, and xylene) and light POM (predominately naphthalene and 2-methyl naphthalene). The level of HAP emitted from the DCU has been found to be a function of the quantity of steam generated (see the technical memorandum entitled *Impacts Estimates for Delayed Coking Units* in Docket ID Number EPA–HQ–OAR–2010–0682).

In general, the next step in the decoking process is draining the water from the coke drum by opening a large valve at the bottom of the coke drum. The drain water typically falls from the coke drum onto a slanted concrete pad that directs the water to the coke pit area (where water and coke are collected and separated). Some DCU owners or operators initiate draining at the same time they initiate venting; other owners or operators may allow the vessel to vent for 20 or more minutes prior to initiating draining. While draining immediately may reduce the amount of steam exiting the unit via the stack, as explained below, it is not expected to alter the overall emissions from the unit. During the venting and draining process, the pressure of the system falls to atmospheric. Steam will be generated until the evaporative cooling effect of that steam generation cools the coker quench water to 212 °F. If draining is initiated immediately, some of the superheated water may drain from the DCU before being cooled. A portion of that drained water will then convert to steam during the draining process as that superheated water contacts the open atmosphere. Therefore, draining quickly is not expected to alter the total amount of steam generated from the unit nor alter the overall emissions from the unit. It will, however, alter the relative proportion of the emissions that are released via the vent versus the quench water drain area.

The next step in the decoking process is ''deheading'' the coke drum. At the top of the coke drum is a large 3- to 5-foot diameter opening, which is sealed with a gasketed lid during normal operations. When the steam generation rate from the coke drum has sufficiently subsided, this gasketed lid is removed to allow access for a water drill that will be used to remove coke from the drum. The process of removing this lid is referred to as ''deheading'' the coke drum. Different DCU owners or operators may use different criteria for when to dehead the coke drum. If the coke drum is deheaded soon after venting is initiated, some steam and associated HAP emissions may be released from this opening. As with draining, it is anticipated that the total volume of steam generated will be a function of the temperature/pressure of the coke drum. Deheading the coke drum prior to the coke drum contents reaching 212 °F will generally mean that some of the steam will be released from the coke drum head opening. However, this will not alter the total amount of steam generated; it merely alters the location of the release (coke drum head opening versus steam vent). The HAP emissions from the deheading process are expected to be proportional to the amount of steam released in the same manner as the emissions from the steam vent.

The final step of the decoking process is coke cutting. A high-pressure water jet is used to drill or cut the coke out of the vessel. The drilling water and coke slurry exits the coke drum via the drain opening and collects in the coke pit. Generally, the coke drum and its contents are sufficiently cooled so that this process is not expected to yield significant HAP emissions. However, if the other decoking steps are performed too quickly, hot spots may exist within the coke bed and HAP emissions may occur as water contacts these hot spots and additional steam and emissions are released.

Once the coke is cut out of the drum, the drum is closed and prepared to go back on-line. This process includes pressurizing with steam to ensure there are no leaks (*i.e.,* that the head is properly attached and sealed and the drain valve is fully closed). The vessel is then purged to remove any oxygen and heated by diverting the produced gas from the processing coke drum through the empty drum prior to sending it to the unit's distillation column. A coke drum cycle is typically 28 to 36 hours from start of feed to start of the next feed.

b. How Delayed Coker Vents Are Addressed in Refinery MACT 1

Delayed coker vents are specifically mentioned as an example within the first paragraph of the definition of ''miscellaneous process vent'' in 40 CFR 63.641 of Refinery MACT 1. However, the definition of ''miscellaneous process vent'' also excludes coking unit vents associated with coke drum depressuring (at or below a coke drum outlet pressure of 15 pounds per square inch gauge [psig]), deheading, draining, or decoking (coke cutting) or pressure testing after decoking. Refinery MACT 1 also

includes a definition of ''delayed coker vent'' in 40 CFR 63.641. This vent is typically intermittent in nature, and usually occurs only during the initiation of the depressuring cycle of the decoking operation when vapor from the coke drums cannot be sent to the fractionator column for product recovery, but instead is routed to the atmosphere through a closed blowdown system or directly to the atmosphere in an open blowdown system. The emissions from the decoking phases of DCU operations, which include coke drum deheading, draining, or decoking (coke cutting), are not considered to be delayed coker vents.

The first paragraph of the definition of ''miscellaneous process vent'' also includes blowdown condensers/accumulators as an example of a miscellaneous process vent. Therefore, the DCU blowdown system is a miscellaneous process vent regardless of whether or not the blowdown system is associated with a DCU or another process unit. Further, the inclusion of the ''delayed coker vent'' as an example of a miscellaneous process vent makes it clear that the DCU's blowdown system vent (if an open blowdown system is used) is considered a miscellaneous process vent. It is less clear from the regulatory text whether the direct venting of the coke drum to the atmosphere via the steam vent during the final depressurization is considered to be a ''delayed coker vent'' (*i.e.,* whether direct venting to the atmosphere is equivalent to venting ''directly to the atmosphere in an open blowdown system'').

The regulatory text is clear that this steam vent is exempt from the definition of ''miscellaneous process vent'' when the pressure of the vessel is less than 15 psig. It is also clear that the subsequent release points from the decoking operations (*i.e.,* deheading, draining, and coke cutting) are excluded from both the definition of ''delayed coker vent'' and the definition of ''miscellaneous process vent.'' Further, based on the statements in the background information document for the August 1995 final Refinery MACT 1 rule,[26] the 15 psig pressure limit for the direct venting of the DCU to the atmosphere was not established as a MACT floor control level; it was established to accommodate all DCU at whatever pressure they typically switched from venting to the closed blowdown system to venting directly to the atmosphere. Based on this information, as well as the data from the 2011 Refinery ICR, refinery enforcement settlements and other information available, which indicate that all refineries depressurize the coke drum below 15 psig, we have determined that the direct atmospheric releases from the DCU decoking operations are currently unregulated emissions. These unregulated releases include emissions during atmospheric depressuring (*i.e.,* the steam vent), deheading, draining, and coke cutting.

c. Evaluation of MACT Emission Limitations for Delayed Coking Units

We evaluated emissions and controls during DCU decoking operations in order to identify appropriate MACT emission limitations pursuant to CAA section 112(d)(2) and (3). Establishing a lower pressure set point at which a DCU owner or operator can switch from venting to an enclosed blowdown system to venting to the atmosphere is the control technique identified for reducing emissions from delayed coking operations. Essentially, there is a fixed quantity of steam that will be generated as the coke drum and its contents cool. The lower pressure set point will require the DCU to vent to the closed blowdown system longer, where the organic HAP can be recovered or controlled. This will result in fewer emissions released during the venting, draining and deheading process.

We consider this control technique, which is a work practice standard, appropriate for the DCU for the reasons discussed below for each of the four possible emission points at the DCU: draining, deheading, coke cutting and the steam vent. For the first three steps, the emissions cannot be emitted through a conveyance designed and constructed to emit or capture such pollutant. For example, during draining, the drain water typically falls from the coke drum onto a slanted concrete pad that directs the water to an open coke pit area (where water and coke are collected and separated). When the coke drum is deheaded, the coke drum head must be removed to provide an accessible opening in the drum so the coke cutting equipment can be lowered into the drum. This opening cannot be sealed during coke cutting because the drilling shaft will occupy the opening and the shaft must be free to be lowered or raised during the coke cutting process.

While the emissions from the fourth point, the DCU steam vent, are released via a conveyance designed and constructed to emit or capture such pollutant, as provided in CAA section 112(h)(2)(B), it is not feasible to prescribe or enforce an emission standard for the DCU steam vent because the application of a measurement methodology for this source is not practicable due to technological and economic limitations.

First, it is not practicable to use a measurement methodology for the DCU steam vent. The emissions from the vent typically contain 99 percent water, which interferes with common sample collection and analysis techniques. Also, the flow rate from this vent is not constant; rather, it decreases during the venting process as the pressure in the DCU coke drum approaches atmospheric pressure. Additionally, the venting time can be very short. As part of the ICR, we requested stack testing of eight DCU. After discussions with stack testing experts within the agency and with outside contractors used by industry to perform the tests, we concluded that sources with venting times less than 20 minutes would not be able to perform an emissions test that would yield valid results. Therefore, only two of the eight facilities actually performed the tests. We anticipate all units complying with the proposed standards for DCU steam vents would vent for less than 20 minutes.

Second, it is not feasible to enforce an emission standard only on the steam vent because the timing of drainage and deheading can alter the portion of the decoking emissions that are released from the actual steam vent. If draining and deheading are initiated quickly after venting, this will reduce the emissions discharged from the vent (although as explained above, it does not reduce the emissions from the collective set of decoking operations release points).

Consequently, due to the unique nature of DCU emissions, the difficulties associated with monitoring the DCU steam vent, and the inability to construct a conveyance to capture emissions from all decoking release points, we are proposing that it is appropriate to develop work practice standards in place of emission limits for the DCU.

To establish the MACT floor, we then reviewed regulations, permits and consent decrees that require coke controls. Refinery NSPS Ja establishes a pressure limit of 5 psig prior to allowing the coke drum to be vented to the atmosphere. Based on a review of permit limits and consent decrees, we found that coke drum vessel pressure limits have been established (and achieved) as low as 2 psig. There are 75 operating DCU according to the Refinery ICR responses, so the sixth percentile is represented by the fifth-best performing DCU. We identified eight DCU with

[26] *National Emission Standards for Hazardous Air Pollutants Petroleum Refineries—Background Information for Final Standards;* EPA–453/R–95–015b.

permit requirements or consent decrees specifying a coke drum venting pressure limit of 2 psig; we did not identify any permit or consent decree requirements more stringent than 2 psig. Refinery owners and operators were asked to provide the ''typical coke drum pressure just prior to venting'' for each DCU in their responses to the Refinery ICR, and the responses indicate that four DCU operate such that the typical venting pressure is 1 psig or less. However, this ''typical coke drum pressure'' does not represent a not-to-be-exceeded pressure limit; it is expected that these units are operated this way to meet a pressure limit of 2 psig. We do not have information to indicate whether these facilities are always depressurized at 1 psig or less. Moreover, there were only four units for which a typical venting pressure of 1 psig was identified and the MACT floor for existing sources is represented by the fifth-best operating DCU, not the best-performing unit. Therefore, we are proposing that the MACT floor for DCU decoking operations is to depressure at 2 psig or less prior to venting to the atmosphere for existing sources. We are also proposing that the MACT floor for new sources is 2 psig, since the best-performing source is permitted to depressure at 2 psig or less. For additional details on the MACT floor analysis, see memorandum entitled *MACT Analysis for Delayed Coking Unit Decoking Operations* in Docket ID Number EPA–HQ–OAR–2010–0682.

We then considered control options beyond the floor level of 2 psig to determine if additional emission reductions could be cost-effectively achieved. We considered establishing a venting pressure limit of 1 psig or less, since four facilities reported in the ICR that the typical coke drum pressure prior to depressurizing was 1 psig. There are several technical difficulties associated with establishing a pressure limit at this lower level. First, the lowest pressure at any point in a closed blowdown system is generally designed to be no lower than 0.5 psig. Consequently, the DCU compressor system would operate with an inlet pressure of no less than 0.5 psig. Second, there are several valves and significant piping (for cooling and condensing steam) between the DCU drum and the recovery compressor. There is an inherent pressure drop when a fluid flows through a pipe or valve. Two valves are used for all DCU lines to make sure that the unit is either blocked off from the processing fluids or blocked in so there are no product losses out the steam line during processing. Considering the need for two valves and piping needed in the cooling system, DCU designed for a minimal pressure loss will generally still have a 0.5 to 1 psig pressure drop between the DCU drum and the recovery compressor inlet, even for a new DCU designed to minimize this pressure drop. Finally, in order to meet a 1 psig pressure limit at all times, the DCU closed vent system would need to be designed to achieve a vessel pressure of approximately 0.5 psig. Given the above considerations, it is not technically feasible for new or existing DCU to routinely achieve a vessel pressure of 0.5 psig in order to comply with a never-to-be-exceeded drum vessel pressure of 1 psig. As noted previously, facilities that ''typically'' achieve vessel pressures of about 1 psig or less are expected to do so in order to meet a never-to-be-exceeded drum vessel pressure limit of 2 psig and they are not expected to be able to comply with a never-to-be-exceeded drum vessel pressure limit of 1 psig.

We considered setting additional work practice standards regarding draining, deheading, and coke cutting. The decoking emissions can be released from a variety of locations, and the 2-psig-or-less limit for depressurizing the coke drum will effectively reduce the emissions from all of these emission points, provided that atmospheric venting via the DCU steam vent is the first step in the decoking process. However, it is possible to start draining water prior to opening the steam vent. We are concerned that owners or operators may adopt this practice as a means to reduce pressure in the coke drum prior to venting the drum to the atmosphere. Initiating water draining prior to reaching 2 psig would result in draining water that is hotter than it would be had the drum been sufficiently cooled (*i.e.,* the pressure limit achieved) prior to draining the vessel, effectively diverting HAP emissions to the water drain area rather than capturing these HAP in the enclosed blowdown system, where they can be either recovered or controlled. Therefore, we are proposing that the coke drum must reach 2 psig or less prior to any decoking operations, which includes atmospheric venting, draining, deheading, and coke cutting.

We could not identify any other emission reduction options that could lower the emissions from the DCU decoking operations. Since we could not identify a technically feasible control option beyond the MACT floor, we determined that the MACT floor pressure limit of 2 psig is MACT for existing sources. We also determined that the same technical limitations of going beyond the 2 psig pressure limit for existing sources exist for new sources; therefore we determined that the MACT floor pressure limit of 2 psig is MACT for new sources. We request comment on whether depressurizing to 2 psig prior to venting to the atmosphere is the appropriate MACT floor and whether it is appropriate to include restrictions for the other three decoking operations draining, deheading and coke cutting, in the MACT requirements. We request comments on whether we have adequately interpreted the information that indicates that there is currently no applicable MACT floor for delayed coking. If Refinery MACT 1 currently provided standards for DCU based on the MACT floor, we would evaluate whether it is necessary to revise such delayed coking standards under the risk and technology review requirements of the Act (*i.e.,* CAA section 112(f) and 112(d)(6)) as discussed later in this preamble.

Finally, we request comment and supporting information on any other practices that may be used to limit emissions during the decoking operations.

d. Evaluation of Cost and Environmental Impacts of MACT Emission Limitations for Delayed Coking Units

DCU that cannot currently meet the 2 psig pressure limit would be expected to install a device (compressor or steam ejector system) to lower the DCU vessel pressure. In the Refinery NSPS Ja impact analysis, facilities not able to meet the pressure threshold were assumed to purchase and install a larger compressor to lower the blowdown system pressure. Other approaches to lowering blowdown system (and coke drum) pressure exist. Specifically, steam ejectors have been identified as a method to help existing units depressurize more fully in order to achieve a set vessel pressure or drum bed temperature. Upgrading the closed vent system to reduce pressure losses or to increase steam condensing capacity may also allow the DCU to depressurize more quickly while the emissions are still vented to the closed blowdown system. This is important because delays in the decoking operations may impact process feed rates. That is, if the decoking and drum preparation steps take too long, the feed rate to the other coke unit must be reduced to prevent overfilling one coke drum prior to being able to switch to the other coke drum. This issue is less critical for DCU that operate with 3 or 4 drums per distillation column, but a consistent increase in the decoking times across all

drums may still limit the capacity of the DCU at some petroleum refineries.

For existing sources, we assumed all DCU that reported a ''typical drum pressure prior to venting'' of more than 2 psig would install and operate a steam ejector system to reduce the coke drum pressure to 2 psig prior to venting to atmosphere or draining.

The operating costs of the steam ejector system are offset, to some extent, by the additional recovered vapors. Vapors from the additional gases routed to the blowdown system contain high levels of methane (approximately 70 percent by volume on a dry basis) based on DCU steam vent test data. If these vapors are directed to the closed blowdown system rather than to the atmosphere, generally the dry gas can be recovered in the refinery fuel gas system or light-ends gas plant. This recovered methane is expected to off-set natural gas purchases for the fuel gas system.

For new sources, it is anticipated that the DCU's closed vent system could be designed to achieve a 2 psig vessel pressure with no significant increase in capital or operating costs. Designing the system to vent at a lower pressure would also result in additional vapor recovery, which is expected to off-set any additional capital costs associated with the low pressure design closed vent system.

The costs of complying with the 2 psig coke drum threshold prior to venting or draining are summarized in Table 2 of this preamble. The costs are approximately $1,000 per ton of VOC reduced and approximately $5,000 per ton of organic HAP reduced when considering VOC and methane recovery credits. In addition to VOC and HAP reductions, the proposed control option will result in a reduction in methane emissions of 18,000 tpy or 343,000 metric tonnes per year of carbon dioxide equivalents (CO_2e), assuming a global warming potential of 21 for methane.

TABLE 2—NATIONWIDE EMISSIONS REDUCTION AND COST IMPACTS OF CONTROL OPTION FOR DELAYED COKING UNITS AT PETROLEUM REFINERIES

Control option	Capital cost (million $)	Annualized costs without recovery credits (million $/yr)	Emissions reduction, VOC (tpy)	Emissions reduction, HAP (tpy)	Cost effectiveness ($/ton HAP)	Total annualized costs with VOC recovery credit (million $/yr)	Overall cost effectiveness with VOC recovery credit ($/ton HAP)
2 psig	52	10.2	4,250	850	12,000	3.98	4,700

2. CRU Vents

A CRU is designed to reform (*i.e.,* change the chemical structure of) naphtha into higher-octane aromatics. Over time, coke deposits form on the reforming catalyst, which reduces the catalyst activity. When catalyst activity is reduced to a certain point, the catalyst is regenerated by burning the coke off of the catalyst. Prior to this coke burn-off process, the catalyst (or reactor vessel containing the catalyst) must be removed from active service and organics remaining on the catalyst (or in the reactor) must be purged from the system. This is generally accomplished by depressurizing the vessel to a certain vessel pressure, then re-pressurizing the vessel with nitrogen and depressurizing the vessel again. The re-pressurization and depressurization process is repeated several times until all organics have been purged from the system. The organic HAP emissions from this depressurization/purge cycle vent are typically controlled by directing the purge gas directly to the CRU process heater or venting the gas to a flare.

Refinery MACT 2 requires a 98-percent reduction of organic HAP measured as total organic carbon (TOC) or non-methane TOC or an outlet concentration of 20 ppmv or less (dry basis, as hexane, corrected to 3-percent oxygen), whichever is less stringent, for this CRU depressurization/purge cycle vent (purging prior to coke-burn-off). The emission limits for organic HAP for the CRU do not apply to emissions from process vents during depressuring and purging operations when the reactor vent pressure is 5 psig or less. The Refinery MACT 2 requirements were based on the typical operation of CRU utilizing sequential pressurization and passive depressurization. The 5 psig pressure limit exclusion was provided based on state permit conditions, which recognized that depressurization to an APCD (without other active motive of flow) is limited by the back pressure of the control system, which is often a flare or process heater. Source testing information collected from the 2011 Refinery ICR indicates that facilities have interpreted the rule to allow the 5 psig pressure limit exclusion to be used by units using active purging techniques (such as continuous nitrogen purge or vacuum pump on the CRU reactor at low pressures) to discharge to the atmosphere without emission controls. The information collected indicates that HAP emissions from a continuous, active purging technique could result in emissions of HAP from CRU depressurization vents much higher than expected to be allowed under the Refinery MACT 2 requirements, which presumed sequential re-pressurization and purging cycles. The testing information received indicated that at one facility, the active purge vent had non-methane TOC concentrations of 700 to 10,000 ppmv (dry basis, as hexane, corrected to 3-percent oxygen) compared to less than 10 ppmv for the typical passive purge vent tested. The annual HAP emissions for the CRU with the active purge vent were estimated to exceed 10 tpy, while a comparable unit using the cyclic re-pressurization and passive depressurization purge technique is projected to have HAP emissions of less than 0.1 tpy.

Therefore, we are proposing to amend the exclusion in 40 CFR 63.1566(a)(4) to clarify the application of the 5 psig exclusion, consistent with the MACT floor under CAA section 112(d)(2) and (3). Specifically, we are limiting the vessel pressure limit exclusion to apply only to passive vessel depressurization. Units utilizing active purging techniques have a motive of flow that can be used to direct the purge gas to a control system, regardless of the CRU vessel pressure. If a CRU owner or operator uses active purging techniques (*e.g.,* a continual nitrogen purge) or active vessel depressurization (*e.g.,* vacuum pump), then the 98-percent reduction or 20 ppmv TOC emission limits would apply to these discharges regardless of the vessel pressure.

3. Refinery Flares

The EPA is proposing under CAA section 112(d)(2) and (3) to amend the operating and monitoring requirements for petroleum refinery flares. We have determined that the current requirements for flares are not adequate to ensure compliance with the Refinery MACT standards. In the development of Refinery MACT 1, the EPA determined that the average emission limitation achieved by the best-performing 12

percent of existing sources was established as the use of combustion controls for miscellaneous process vents. Further, the EPA stated that ''data analyses conducted in developing previous NSPS and the [National Emission Standards for Organic Hazardous Air Pollutants (40 CFR part 63, subparts F, G, and H)] HON determined that combustion controls can achieve 98-percent organic HAP reduction or an outlet organic HAP concentration of 20 ppmv for all vent streams'' (59 FR 36139, July 15, 1994). The requirements applicable to flares at refineries are set forth in the General Provisions to 40 CFR part 63 and are cross-referenced in Refinery MACT 1 and 2. In general, flares used as APCD were expected to achieve 98-percent HAP destruction efficiencies when designed and operated according to the requirements in the General Provisions. Recent studies on flare performance, however, indicate that these General Provisions requirements are inadequate to ensure proper performance of refinery flares, particularly when assist steam or assist air is used. Over the last decade, flare minimization efforts at petroleum refineries have led to an increasing number of flares operating at well below their design capacity, and while this effort has resulted in reduced flaring of gases at refineries, situations of over-assisting with steam or air have become exacerbated, leading to the degradation of flare combustion efficiency. Therefore, these amendments are necessary to ensure that refineries that use flares as APCD meet the MACT standards at all times when controlling HAP emissions.

Refinery MACT 1 and 2 require flares used as an APCD to meet the operational requirements set forth in the General Provisions at 40 CFR 63.11(b). These General Provisions requirements specify that flares shall be: (1) Steam-assisted, air-assisted, or non-assisted; (2) operated at all times when emissions may be vented to them; (3) designed for and operated with no visible emissions (except for periods not to exceed a total of 5 minutes during any 2 consecutive hours); and (4) operated with the presence of a pilot flame at all times. The General Provisions also specify requirements for both the minimum heat content of gas combusted in the flare and maximum exit velocity at the flare tip. The General Provisions only specify monitoring requirements for the presence of the pilot flame and the operation of a flare with no visible emissions. For all other operating limits, Refinery MACT 1 and 2 require an initial performance evaluation to demonstrate compliance but there are no specific monitoring requirements to ensure continuous compliance. As noted previously, flare performance tests conducted over the past few years suggest that the current regulatory requirements are insufficient to ensure that refinery flares are operating consistently with the 98-percent HAP destruction efficiencies that we determined were the MACT floor.

In 2012, the EPA compiled information and test data collected on flares and summarized its preliminary findings on operating parameters that affect flare combustion efficiency (see technical report, *Parameters for Properly Designed and Operated Flares,* in Docket ID Number EPA–HQ–OAR–2010–0682). The EPA submitted the report, along with a charge statement and a set of charge questions to an external peer review panel.[27] The panel concurred with the EPA's assessment that three primary factors affect flare performance: (1) The flow of the vent gas to the flare; (2) the amount of assist media (*e.g.,* steam or air) added to the flare; and (3) the combustibility of the vent gas/assist media mixture in the combustion zone (*i.e.,* the net heating value, lower flammability, and/or combustibles concentration) at the flare tip.

Following is a discussion of requirements we are proposing for refinery flares, along with impacts and costs associated with these new requirements. Specifically, this action proposes that refinery flares operate pilot flame systems continuously and with automatic re-ignition systems and that refinery flares operate with no visible emissions. In addition, this action also consolidates requirements related to flare tip velocity and proposes new operational and monitoring requirements related to the combustion zone gas. Prior to these proposed amendments, Refinery MACT 1 and 2 cross-reference the General Provisions requirements at 40 CFR 63.11(b) for the operational requirements for flares used as APCD. Rather than revising the General Provisions requirements for flares, which would impact dozens of different source categories, this proposal will specify all refinery flare operational and monitoring requirements specifically in Refinery MACT 1 and cross-reference these same requirements in Refinery MACT 2. All of the requirements for flares operating at petroleum refineries in this proposed rulemaking are intended to ensure compliance with the Refinery MACT 1 and 2 standards when using a flare as an APCD.

a. Pilot Flames

Refinery MACT 1 and 2 reference the flare requirements in the General Provisions, which require a flare used as an APCD device to operate with a pilot flame present at all times. Pilot flames are proven to improve flare flame stability; even short durations of an extinguished pilot could cause a significant reduction in flare destruction efficiency. In this action, we are proposing to remove the cross-reference to the General Provisions and instead include the requirement that flares operate with a pilot flame at all times and be continuously monitored for using a thermocouple or any other equivalent device in Refinery MACT 1 and 2. We are also proposing to amend Refinery MACT 1 and 2 to add a new operational requirement to use automatic relight systems for all flare pilot flames. An automatic relight system provides a quicker response time to relighting a snuffed-out flare compared to manual methods and thereby results in improved flare flame stability. In comparison, manual relighting is much more likely to result in a longer period where the pilot remains unlit. Because of safety issues with manual relighting, we anticipate that nearly all refinery flares are already equipped with an automated device to relight the pilot flame in the event it is extinguished. Also, due to the possibility that a delay in relighting the pilot could result in a flare not meeting the 98-percent destruction efficiency for the period when the pilot flame is out, we are proposing to amend Refinery MACT 1 and 2 to add this requirement to ensure that the pilot operates at all times.

b. Visible Emissions

Refinery MACT 1 and 2 reference the flare requirements in the General Provisions, which require a flare used as an APCD to operate with visible emissions for no more than 5 minutes in a 2-hour period. Owners or operators of these flares are required to conduct an initial performance demonstration for visible emissions using EPA Method 22 of 40 CFR part 60, Appendix A–7. We are proposing to remove the cross-reference to the General Provisions and include the limitation on visible emissions in Refinery MACT 1 and 2. In addition, we are proposing to amend Refinery MACT 1 and 2 to add a requirement that a visible emissions test be conducted each day and whenever visible emissions are observed from the flare. We are proposing that owners or

[27] These documents can also be found at *http://www.epa.gov/ttn/atw/petref.html.*

operators of flares monitor visible emissions at a minimum of once per day using an observation period of 5 minutes and EPA Method 22 of 40 CFR part 60, Appendix A–7. Additionally, any time there are visual emissions from the flare, we are proposing that another 5-minute visible emissions observation period be performed using EPA Method 22 of 40 CFR part 60, Appendix A–7, even if the minimum required daily visible emission monitoring has already been performed. For example, if an employee observes visual emissions or receives notification of such by the community, the owner or operator of the flare would be required to perform a 5-minute EPA Method 22 observation in order to check for compliance upon initial observation or notification of such event. We are also proposing that if visible emissions are observed for greater than one continuous minute during any of the required 5-minute observation periods, the monitoring period shall be extended to 2 hours.

Industry representatives have suggested to the EPA that flare combustion efficiency is highest at the incipient smoke point (the point at which black smoke begins to form within the flame). They stated that the existing limit for visible emissions could be increased from 5 minutes to 10 minutes in a 2-hour period to encourage operation near the incipient smoke point (see memorandum, *Meeting Minutes for February 19, 2013, Meeting Between the U.S. EPA and Representatives from the Petroleum Refining Industry,* in Docket ID Number EPA–HQ–OAR–2010–0682). While we agree that operating near the incipient smoke point results in good combustion at the flare tip, we disagree that the allowable period for visible emissions be increased from 5 to 10 minutes for a 2-hour period. Smoking flares can contribute significantly to emissions of particulate matter 2.5 micrometers in diameter and smaller ($PM_{2.5}$) emissions, and we are concerned that increasing the allowable period of visible emissions from 5 minutes to 10 minutes for every 2-hour period could result in an increase in the $PM_{2.5}$ emissions from flares.

As discussed later in this section, we are proposing additional operational and monitoring requirements for refinery flares which we expect will result in refineries installing equipment that can be used to fine-tune and control the amount of assist steam or air introduced at the flare tip such that combustion efficiency of the flare will be maximized. These monitoring and control systems will assist refinery flare owners or operators operating near the incipient smoke point without exceeding the visible emissions limit. While combustion efficiency may be highest at the incipient smoke point, it is not significantly higher than the combustion efficiency achieved by these proposed operating limits, discussed in section IV.A.3.d of this preamble. As seen in the performance curves for flares (see technical memorandum, *Petroleum Refinery Sector Rule: Operating Limits for Flares,* in Docket ID Number EPA–HQ–OAR–2010–0682), there is very limited improvement in flare performance beyond the performance achieved at these proposed operating limits. We solicit comments and data on appropriate periods of visible emissions that would encourage operation at the incipient smoke point while not significantly increasing $PM_{2.5}$ emissions.

c. Flare Tip Velocity

The General Provisions at 40 CFR 63.11(b) specify maximum flare tip velocities based on flare type (non-assisted, steam-assisted, or air-assisted) and the net heating value of the flare vent gas. These maximum flare tip velocities are required to ensure that the flame does not ''lift off'' the flare, which could cause flame instability and/or potentially result in a portion of the flare gas being released without proper combustion. We are proposing to remove the cross-reference to the General Provisions and consolidate the requirements for maximum flare tip velocity into Refinery MACT 1 and 2 as a single equation, irrespective of flare type (*i.e.,* steam-assisted, air-assisted or non-assisted). Based on our analysis of the various studies for air-assisted flares, we identified air-assisted test runs with high flare tip velocities that had high combustion efficiencies (see technical memorandum, *Petroleum Refinery Sector Rule: Evaluation of Flare Tip Velocity Requirements,* in Docket ID Number EPA–HQ–OAR–2010–0682). These test runs exceeded the maximum flare tip velocity limits for air-assisted flares using the linear equation in 40 CFR 63.11(b)(8). When these test runs were compared with the test runs for non-assisted and steam-assisted flares, the air-assisted flares appeared to have the same operating envelope as the non-assisted and steam-assisted flares. Therefore, we are proposing that air-assisted flares at refineries use the same equation that non-assisted and steam-assisted flares currently use to establish the flare tip velocity operating limit.

In developing these proposed flare tip velocity requirements, we considered whether any adjustments to these velocity equations were necessary. The flare tip velocity equations require the input of the net heating value of the vent gas going to the flare, as opposed to the net heating value of the gas mixture at the flare tip (*i.e.,* the combustion zone gas). As discussed later in this section, we found that the performance of the flare was much more dependent on the net heating value of the gas mixture in the combustion zone than on the net heating value of only the vent gas going into the flare (excluding all assist media). We considered replacing the term in the velocity equation for the net heating value of the vent gas going into the flare with the net heating value of the gas mixture in the combustion zone. However, the steam addition rates were not reported for the tests conducted to evaluate flame stability as a function of flare tip velocity, so direct calculation of all the terms needed for calculating the net heating value in the combustion zone could not be made. At higher flare tip velocities, we expect that the steam assist rates would be small in comparison to the total vent gas flow rate, so there would not be a significant difference between the net heating value of the vent gas going into the flare and the combustion zone gas net heating value for the higher velocity flame stability tests. We request comment on the need and/or scientific reasons to use the flare vent gas net heating value versus the combustion zone net heating value when determining the maximum allowable flare tip velocity.

In the 2012 flare peer review, we also discussed the effect of flame lift off and velocity on flare flame stability (see technical report, *Parameters for Properly Designed and Operated Flares,* in Docket ID Number EPA–HQ–OAR–2010–0682). In looking at ways of trying to prohibit flame instability, we examined the use of the Shore equation as a means to limit flare tip velocity. However, after receiving many comments on use of this equation from the peer reviewers, the uncertainty with how well the Shore equation models the large range of flare operation, and the limited dataset with which recent testing used high velocities (all recent test runs were performed at 10 feet per second or less), we determined that use of the existing velocity equation discussed above was still warranted.

We are also proposing for Refinery MACT 1 and 2 to not include the special flare tip velocity equation in the General Provisions at 40 CFR 63.11(b)(6)(i)(A) for non-assisted flares with hydrogen content greater than 8 percent. This equation, which was developed based on limited data from a chemicals manufacturer, has very limited

applicability for petroleum refinery flares in that it only provides an alternative for non-assisted flares with large quantities of hydrogen. Approximately 90 percent of all refinery flares are either steam- or air-assisted. Furthermore, we are proposing compliance alternatives in this section that we believe provide a better way for flares at petroleum refineries with high hydrogen content to comply with the rule while ensuring proper destruction performance of the flare (see section IV.A.3.d of this preamble for additional details). Therefore, we are proposing to not include this special flare tip velocity equation as a compliance alternative for refinery flares. We request comment on the need to include this equation. If a commenter supports inclusion of this equation, we request that the commenter submit supporting documentation regarding the vent gas composition and flows and, if available, combustion efficiency determinations that indicate that this additional equation is needed and is appropriate for refinery flares. We also request documentation that the maximum allowable flare tip velocity predicted by this equation adequately ensures proper combustion efficiency.

The General Provisions require an initial demonstration that a flare used as an APCD meets the applicable flare tip velocity requirement in 40 CFR 63.11(b). However, most refinery flares can have highly variable vent gas flows and a single initial demonstration is insufficient to demonstrate continuous compliance with the flare tip velocity requirement. Consequently, we are proposing to amend Refinery MACT 1 and 2 to require continuous monitoring to determine flare tip velocity, calculated by monitoring the flare vent gas volumetric flow rate and dividing by the cross-sectional area of the flare tip. As an alternative to installing continuous volumetric flow rate monitors, we are proposing that the owner or operator may elect to install a pressure- and temperature-monitoring system and use engineering calculations to determine the flare tip velocity.

d. Refinery Flare Operating and Monitoring Requirements

The current requirements for flares in the General Provisions specify that the flare vent gas must meet a minimum net heating value of 200 British thermal units per standard cubic foot (Btu/scf) for non-assisted flares and 300 Btu/scf for air- and steam-assisted flares. Refinery MACT 1 and 2 reference these requirements, but neither the General Provisions nor Refinery MACT 1 and 2 include specific monitoring requirements to monitor the net heating value of the vent gas. Moreover, recent flare testing results indicate that this parameter alone does not adequately address instances when the flare may be over-assisted since it only considers the gas being combusted in the flare and nothing else (*e.g.,* no assist media). However, many industrial flares use steam or air as an assist medium to protect the design of the flare tip, promote turbulence for the mixing, induce air into the flame and operate with no visible emissions. Using excessive steam or air results in dilution and cooling of flared gases and can lead to operating a flare outside its stable flame envelope, reducing the destruction efficiency of the flare. In extreme cases, over-steaming or excess aeration can actually snuff out a flame and allow regulated material to be released into the atmosphere completely uncombusted. Since approximately 90 percent of all flares at refineries are either steam- or air-assisted, it is critical that we ensure the assist media be accounted for in some form or fashion. Recent flare test data have shown that the best way to account for situations of over-assisting is to consider the properties of the mixture of all gases at the flare tip in the combustion zone when evaluating the ability to combust efficiently. As discussed in the introduction to this section, the external peer review panel concurred with our assessment that the combustion zone properties at the flare tip are critical parameters to know in determining whether a flare will achieve good combustion. The General Provisions, however, solely rely on the net heating value of the flare vent gas.

We are proposing to add definitions of two key terms relevant to refinery flare performance. First, we are proposing to define ''flare vent gas'' to include all waste gas, sweep gas, purge gas and supplemental gas, but not include pilot gas or assist media. We are proposing this definition because information about ''flare vent gas'' (*e.g.,* flow rate and composition) is one of the necessary inputs needed to evaluate the make-up of the combustion zone gas. To that end, we are also proposing to define the ''combustion zone gas'' as flare vent gas plus the total steam-assist media and premix assist air that is supplied to the flare.

Based on our review of the recent flare test data, we have determined that the following combustion zone operational limits can be used to determine good combustion: Net heating value (Btu/scf), lower flammability limit (LFL) or a total combustibles fraction (*e.g.,* a simple carbon count). In this action, we are proposing these new operational limits, along with methods for determining these limits in the combustion zone at the flare tip for steam-assisted, air-assisted and non-assisted flares to ensure that there is enough combustible material readily available to achieve good combustion.

For air-assisted flares, use of too much perimeter assist air can lead to poor flare performance. Based on our analysis, we found that including the flow rate of perimeter assist air in the calculation of combustion zone operational limits in itself does not identify all instances of excess aeration. The data suggest that the diameter of the flare tip, in concert with the amount of perimeter assist air, provides the inputs necessary to calculate whether or not this type of flare is over-assisted. Therefore, we are proposing that in addition to complying with combustion zone operational limits to ensure that there is enough combustible material available to adequately combust the gas and pass through the flammability region, air-assisted flares would also comply with an additional dilution parameter that factors in the flow rate of the flare vent gas, flow rates of all assist media (including perimeter assist air), and diameter of flare tip to ensure that degradation of flare performance from excess aeration does not occur. This dilution parameter is consistent with the combustion theory that the more ''time'' the gas spends in the flammability region above the flare tip, the better it will combust. Also, since both the volume of the combustion zone (represented by the diameter here) and how quickly this gas is diluted to a point below the flammability region (represented by perimeter assist air flow rate) characterize this ''time,'' it makes sense that we propose such a term (see technical memorandum, *Petroleum Refinery Sector Rule: Operating Limits for Flares,* in Docket ID Number EPA–HQ–OAR–2010–0682).

It should be noted that in the 2012 flare peer review report, we considered a limit for perimeter assist air via the stoichiometric air ratio. This stoichiometric air ratio is the ratio of the actual mass flow rate of assist air to the theoretical stoichiometric mass flow rate of air (based on complete chemical combustion of fuel to carbon dioxide (CO_2) and water) needed to combust the flare vent gas. However, we are not proposing to include this term as part of the calculation methodology, as we have determined that the dilution parameter discussed in this section better assures that air-assisted flare performance is not degraded due to excess aeration.

The proposed rule allows the owner or operator flexibility to select the form of the combustion zone operational limit (*i.e.,* net heating value, LFL, or total combustibles fraction) with which to comply in order to provide facilities the option of using monitors they may already have in place. The monitoring methods we are proposing take into account the combustible properties of all gas going to the flare (*i.e.,* flare vent gas, assist gas, and premix air) that affects combustion efficiency, and they can be used to determine whether a flare has enough combustible material to achieve the desired level of control (and whether it is being over-assisted). These methods require the owner or operator to input the flow of the vent gas to the flare, the characteristics of the vent gas going to the flare (*i.e.,* either a heat content (Btu/scf), LFL, or total combustible fuel content, depending on how the operational limit is expressed), and the flow of assist media added to the flare.

To estimate the LFL, we are proposing to use a calculation method based on the Le Chatelier equation. The Le Chatelier calculation uses the reciprocal of the volume-weighted average over the LFL of the individual compounds in the gas mixture to estimate the LFL of the gas mixture. Although Le Chatelier's equation was originally limited to binary mixtures of combustible gases, we are proposing a method that was developed by Karim, et al. (1985) and assumes a LFL of infinity for inert gases. We are also aware of other methods and/or adjustments that can be made to the Le Chatelier equation in order to calculate a more accurate estimate of the LFL of a gas mixture (see technical memorandum, *Parameters for Properly Designed and Operated Flares,* in Docket ID Number EPA–HQ–OAR–2010–0682). We are soliciting comment on the use of this proposed method.

Recent data indicate that one set of operational limits may not be sufficient for all refinery flares. Flares that receive vent gas containing significant levels of both hydrogen and olefins often exhibit lower combustion efficiencies than flares that receive vent gas with only one (or none) of these compounds. Therefore, we are proposing more stringent operational limits for flares that simultaneously receive vent gas containing significant levels of both hydrogen and olefins (see technical memorandum, *Petroleum Refinery Sector Rule: Operating Limits for Flares,* in Docket ID Number EPA–HQ–OAR–2010–0682). Although the minimum net heating value in the combustion zone (*i.e.,* Btu/scf) is a good indicator of combustion efficiency, as noted in the flare peer review report, the LFL and combustibles concentration (or total combustibles) in the combustion zone are also good indicators of flare combustion efficiency. For some gas mixtures, such as gases with high hydrogen content, the LFL or combustibles concentration in the combustion zone may be better indicators of performance than net heating value. Consequently, we are proposing operational limits expressed all three ways, along with associated monitoring requirements discussed later in this section.

The three operating limits were established in such a way that each limit is protective on its own. As such, the owner or operator may elect to comply with any of the three alternative operating limits at any time, provided they use a monitoring system capable of determining compliance with each of the proposed alternative operating limits on which they rely (see technical memorandum, *Petroleum Refinery Sector Rule: Operating Limits for Flares,* in Docket ID Number EPA–HQ–OAR–2010–0682). For example, the owner or operator may elect to install monitoring for only one of the three alternative operating limits, in which case the owner or operator must comply with that selected operating limit at all times. If the owner or operator installs a system capable of monitoring for all three of the alternative operating limits, the owner or operator can choose which of the three operating limits the source will rely on to demonstrate compliance.

A summary of the operating limits specified in this proposed rule is provided in Table 3 of this preamble. We are proposing that owners or operators of flares used as APCD would conduct an initial performance test to determine the values of the parameters to be monitored (*e.g.,* the flow rate and heat content of the incoming flare vent gas, the assist media flow rate, and pre-mix air flow rate, if applicable) in order to demonstrate continuous compliance with the operational limits in Table 3. We are proposing to require owners or operators to record and calculate 15-minute block average values for these parameters. Our rationale for selecting a 15-minute block averaging period is provided in section IV.A.3.e of this preamble.

TABLE 3—OPERATING LIMITS FOR FLARES IN THIS PROPOSED ACTION

Operating parameter [a]	Operating limits: Flares without hydrogen-olefin interaction [b]	Operating limits: Flares with hydrogen-olefin interaction [b]
Combustion zone parameters for all flares		
NHV_{cz}	≥270 Btu/scf	≥380 Btu/scf.
LFL_{cz}	≤0.15 volume fraction	≤0.11 volume fraction.
C_{cz}	≥0.18 volume fraction	≥0.23 volume fraction.
Dilution parameters for flares using perimeter assist air		
NHV_{dil}	≥22 Btu/ft^2	≥32 Btu/ft^2.
LFL_{dil}	≤2.2 volume fraction/ft	≤1.6 volume fraction/ft.
C_{dil}	≥0.012 volume fraction-ft	≥0.015 volume fraction-ft.

[a] The operating parameters are:
NHV_{cz} = combustion zone net heating value.
LFL_{cz} = combustion zone lower flammability limit.
C_{cz} = combustion zone combustibles concentration.
NHV_{dil} = net heating value dilution parameter.
LFL_{dil} = lower flammability limit dilution parameter.
C_{dil} = combustibles concentration dilution parameter.

[b] Hydrogen-Olefin interactions are assumed to be present when the concentration of hydrogen and olefins in the combustion zone exceed all three of the following criteria:
(1) The concentration of hydrogen in the combustion zone is greater than 1.2 percent by volume.
(2) The cumulative concentration of olefins in the combustion zone is greater than 2.5 percent by volume.

(3) The cumulative concentration of olefins in the combustion zone plus the concentration of hydrogen in the combustion zone is greater than 7.4 percent by volume.

Btu/ft^2 = British thermal units per square foot.

We are soliciting comment on the appropriateness of the operating limits and dilution parameters in Table 3 of this preamble and whether they ensure that refinery flares operate in a manner that that will ensure compliance with the MACT requirements for vents to achieve a 98-percent organic HAP reduction.

Combustion zone gas monitoring alternatives. As discussed previously in this section, we are proposing to define the combustion zone gas as the mixture of gas at the flare tip consisting of the flare vent gas, the total steam-assist media and premix assist air. In order to demonstrate compliance with the three combustion zone parameter operating limits of net heating value, LFL and total combustibles fraction, the owner or operator would need to monitor four things: (1) Flow rate of the flare vent gas; (2) flow rate of total steam assist media; (3) flow rate of premix assist air and (4) specific characteristics associated with the flare vent gas (*e.g.,* heat content, composition). In order to monitor the flow rates of the flare vent gas, total steam assist media, and premix assist air, we are proposing that refinery owners or operators use a continuous volumetric flow rate monitoring system or a pressure- and temperature-monitoring system with use of engineering calculations. We are also proposing use of either of these monitoring methods for purposes of determining the flow rate of perimeter assist air (for compliance with the dilution parameter). However, the one component that will determine how many combustion zone parameter operating limits an owner or operator can comply with is the specific type of monitor used to characterize the flare vent gas.

Monitoring the individual component concentrations of the flare vent gas using an on-line gas chromatograph (GC) along with monitoring vent gas and assist gas flow rates will allow the owner or operator to determine compliance with any of the three proposed combustion zone operating limits and any of the three proposed dilution operating limits (if using air-assisted flares). We considered requiring all refinery owners or operators of flares to only use a GC to monitor the flare vent gas composition but since facilities may have other non-GC monitors already in place (*e.g.,* calorimeters), we are not proposing such a requirement at this time. However, use of a GC can improve refinery flare operation and management of resources. For example, use of a GC to characterize the flare vent gas can lead to product/cost savings for refiners because they could more readily identify and correct instances of product being unintentionally sent to a flare, either through a leaking pressure relief valve or other conveyance that is ultimately routed to the flare header system. In addition, an owner or operator that chooses to use a GC (in lieu of one of the other proposed monitoring alternatives) will be more likely to benefit from the ability to continuously fine-tune their operations (by reducing assist gas addition and/or supplemental gas to the flare) in order to meet any one of the three operating limits. Furthermore, some facilities are already required to use a GC to demonstrate compliance with state flare requirements. We are soliciting comment on the additional benefits that using a GC offers and whether it would be reasonable to require a GC on all refinery flares.

As an alternative to a continuous compositional monitoring system, we are proposing to allow the use of grab samples along with engineering calculations to determine the individual component concentration. Like the on-line GC, the grab sampling option relies on compound speciation and is therefore flexible to use with any form of the operational limits we are proposing. The disadvantage of this option is that if a grab sample indicates non-compliance with the operational limits, the permitting authority could presume non-compliance from the time of the previous grab sample indicating compliance, which would include all 15-minute periods in that time period. However, there are a number of situations where the refinery owner or operator may find this option advantageous. For example, some flares receive flows only from a specific process with a consistent composition and high heat content. In this case, the owner or operator may elect to actively adjust the assist gas flow rates using the expected vent gas composition and rely on the analysis of the grab sample to confirm the expected vent gas composition. This alternative may also be preferred for flares that are used infrequently (non-routine flow flares) or that have flare gas recovery systems designed and operated to recover 100 percent of the flare gas under typical conditions. For these flares, flaring events may be so seldom that the refinery owner or operator may prefer the uncertainty in proactive control to the higher cost of continuous monitors that would seldom be used.

As an alternative to performing a compositional analysis with use of a GC (through either on-line monitoring or analysis of the grab sample), we are proposing that owners or operators of flares may elect to install a device that directly monitors vent gas net heating value (*i.e.,* a calorimeter). If the owner or operator elects this monitoring method, we are proposing that they must comply with the operating limits that are based on the net heating value operating limit. Similarly, we are also proposing that owners or operators of flares may elect to install a device that directly monitors the total hydrocarbon content of the flare vent gas (as a measure of the combustibles concentration). If the owner or operator elects this monitoring method, they must comply with the operating limits that are based on the combustibles concentration.

e. Data Averaging Periods for Flare Gas Operating Limits

We are proposing to use a 15-minute block averaging period for each proposed flare operating parameter (including flare tip velocity) to ensure that the flare is operated within the appropriate operating conditions. As flare vent gas flow rates and composition can change significantly over short periods of time, a short averaging time was considered to be the most appropriate for assessing proper flare performance. Furthermore, since flare destruction efficiencies can fall precipitously fast below the proposed operating limits, short time periods where the operating limits are not met could seriously impact the overall performance of the flare. With longer averaging times, there may be too much opportunity to mask these short periods of poor performance (*i.e.,* to achieve the longer-term average operating limit while not achieving a high destruction efficiency over that time period because of short periods of poor performance).

Moreover, a 15-minute averaging period is in line with the test data and the analysis used to establish the operating limits in this proposed rule. Ninety-three percent of the flare test runs used as a basis for establishing the proposed operating limits ranged in duration from 5 to 30 minutes, and 77

percent of the runs ranged in duration from 5 to 20 minutes. The failure analysis (discussed in section IV.A.3.f of this preamble) considered minute-by-minute test run data, but as there are limitations on how quickly compositional analyses can be conducted, many of the compositional data still reflect set values over 10- to 15-minute time intervals. Because the GC compositional analyses generally require 10 to 15 minutes to conduct, shorter averaging times are not practical. To be consistent with the available test data and to ensure there are no short periods of significantly poor performance, we are proposing 15-minute block averaging times.

Given the short averaging times for the operating limits, we are proposing special calculation methodologies to enable refinery owners or operators to use ''feed forward'' calculations to ensure compliance with the operating limits on a 15-minute block average. Specifically, the results of the compositional analysis determined just prior to a 15-minute block period are to be used for the next 15-minute block average. Owners or operators of flares will then know the vent gas properties for the upcoming 15-minute block period and can adjust assist gas flow rates relative to vent gas flow rates to comply with the proposed operating limits.

Owners or operators of flares that elect to use grab sampling and engineering calculations to determine compliance must still assess compliance on a 15-minute block average. The composition of each grab sample is to be used for the duration of the episode or until the next grab sample is taken. We are soliciting comment on whether this approach is appropriate, and whether grab samples are needed on a more frequent basis to ensure compliance with the operating limits.

f. Other Peer Review Considerations

In an effort to better inform the proposed new requirements for refinery flares, in the spring of 2012 the EPA summarized its preliminary findings on operating parameters that affect flare combustion efficiency in a technical report and put this report out for a letter review. Based on the feedback received, the EPA considered many of the concerns peer reviewers expressed in their comments in the development of this proposal for refinery flares (see memorandum, *Peer Review of ''Parameters for Properly Designed and Operated Flares'',* in Docket ID Number EPA–HQ–OAR–2010–0682). While the more substantive issues have been previously discussed in sections IV.A.3.a through e of this preamble, the following discussion addresses other peer review considerations that the EPA either discussed in the peer review technical document or considered from comments received by the peer review panel that played a role in the development of this proposal.

Test data quality and analysis. For steam-assisted flares, we asked peer reviewers to comment on our criteria for excluding available flare test data from our analyses. In general, peer reviewers considered the EPA's reasons for removing certain test data (prior to performing any final analysis) to be appropriate; however, one reviewer suggested the EPA complete an analysis of quality on the data before applying any criteria, and several reviewers commented on the level of scrutiny of the 10 data points specifically discussed in the technical report for not meeting the combustion zone LFL trend. These reviewers stated it appeared the EPA had scrutinized test data more if it were inconsistent with the LFL threshold conclusions made in the report. Although we felt it was appropriate to discuss specific test data not fitting the trend, we do agree with the reviewers that a more general and standard set of criteria should be applied to all test data prior to making any conclusion. In addition, other peer reviewers saw no reason why the EPA should exclude 0-percent combustion efficiency data points, or data points where smoking occurs, or single test runs when there was also a comparable average test run. Therefore, in response to these peer review comments, the EPA performed a validation and usability analysis on all available test data. This resulted in a change to the population of test data used in our final analysis (see technical memorandum, *Flare Performance Data: Summary of Peer Review Comments and Additional Data Analysis for Steam-Assisted Flares,* in Docket ID Number EPA–HQ–OAR–2010–0682 for a more detailed discussion of the data quality and analysis).

To help determine appropriate operating limits, several peer reviewers suggested the EPA perform a false-positive-to-false-negative comparison (or failure type) analysis between the potential parameters discussed in the technical report as indicators of flare performance. The reviewers suggested that the EPA attempt to minimize the standard error of all false positives (*i.e.,* poor observed combustion efficiency when the correlation would predict good combustion) and false negatives (*i.e.,* good observed combustion efficiency when the correlation would predict poor combustion). In response to these comments, the EPA has conducted a failure analyses of these parameters which helped form the basis for the operating limits we are proposing for flares (see technical memorandum, *Petroleum Refinery Sector Rule: Operating Limits for Flares,* in Docket ID Number EPA–HQ–OAR–2010–0682).

Some peer reviewers contended that it is appropriate for the EPA to round each established operating limit to the nearest whole number, because using a decimal implies far more accuracy and reliability than can be determined from the test data. Based on these comments, we have given more consideration to the number of significant figures used in the operating limits, and we are proposing to use two significant figures for the flare operating limits in these proposed amendments.

Multiple peer reviewers performed additional analyses to try and determine the appropriateness of the limits raised in the technical report. Some peer reviewers tried to fit the data to a curve, others performed various failure analyses, while others looked at different metrics not discussed in the technical report (see memorandum, *Peer Review of ''Parameters for Properly Designed and Operated Flares'',* in Docket ID Number EPA–HQ–OAR–2010–0682). Based on the conclusions drawn from these various analyses, a range of combustion zone net heating value targets from 200 Btu/scf to 450 Btu/scf were identified as metrics that would provide a high level of certainty regarding good combustion in flares (Note: 450 Btu/scf was the assumed to be approximately equivalent to a combustion zone LFL of 10 percent). We solicit comment on this range and the appropriateness for which the operating limits selected in this proposal will ensure compliance with the MACT requirements for vents at petroleum refineries.

Effect of supplemental gas use. Most flares normally operate at a high turndown ratio, which means the actual flare gas flow rate is much lower than what the flare is designed to handle. In addition, steam-assisted flares have a manufacturers' minimum steam requirement in order to protect the flare tip. A combination of high turndown ratio and minimum steam requirement will likely require some owners or operators to add supplemental gas to achieve one of the combustion zone gas operating limits we are proposing here (*e.g.,* combustion zone combustibles concentration (C_{cz}) ≥ 18 volume percent; combustion zone lower flammability limit (LFL_{cz}) ≤ 15 volume percent; or combustion zone net heating value (NHV_{cz}) ≥ 270 Btu/scf). However, fine-

tuning the actual steam flow to the flare should significantly reduce the need for supplemental gas. We considered proposing a steam-to-vent gas ratio limitation on steam-assisted flares. However, a steam-to-vent gas ratio alone cannot fully address over-steaming because it would not account for the variability of chemical properties within the flare gas. We request that commenters on this issue provide supporting documentation on their potential to reduce steam as well as their use of supplemental gas to achieve the proposed operating limit(s), and how it could affect cost and potential emissions. We emphasize that the amount and cost of supplemental gas should be reflective of conditions after any excess steam use has been rectified. It would not be valuable to consider situations where large amounts of supplemental gas are added, while steam is simultaneously added far in excess of the amount recommended by the flare manufacturer or other guidance documents.

In assessing the combustion zone gas and looking at all the gas at the flare tip, another potential source of added heat content comes from the gas being used as fuel to maintain a continuously lit pilot flame. However, since pilot gas is being used as fuel for a continuous ignition source and is burned to create a flame prior to (or at the periphery of) the combustion zone, this gas does not directly contribute to the heat content or flammability of the gas being sent to the flare to be controlled under Refinery MACT 1 or 2. In addition, in looking at available test data, the pilot gas flow rate is generally so small that it does not significantly impact the combustion zone properties at all. Furthermore, by leaving pilot gas out of the combustion zone operating limit calculations, the equations become simplified and a requirement to continuously monitor pilot gas flow rate can be avoided. Therefore, we are proposing that the owner or operator not factor in the pilot gas combustible component (or net heating value) contribution when determining any of the three proposed combustion zone gas operating limits (C_{cz}, LFL_{cz}, or NHV_{cz}).

Effects of wind on flame performance. Several published studies have investigated the significance of wind on the fluid mechanics of a flare flame (see technical memorandum, *Parameters for Properly Designed and Operated Flares,* in Docket ID Number EPA–HQ–OAR–2010–0682). These studies were conducted in wind tunnels at crosswind velocities up to about 60 miles per hour (mph) and have illustrated that increased crosswind velocity can have a strong effect on flare flame dimensions and shape, causing the flame to become segmented or discontinuous, and wake-dominated (*i.e.,* where the flame is bent over on the downwind side of a flare pipe and is imbedded in the wake of the flare tip), which may lead to poor flare performance due to fuel stripping. However, the majority of this research is confined to laboratory studies on flares with effective diameters less than 3 inches, which have been shown not to be representative of industrial-sized flares. Research that does include performance tests conducted on flares scalable to refinery flares (*i.e.,* 3-inch, 4-inch, and 6-inch pipe flares) was conducted with flare tip velocities as low as 0.49 feet per second and crosswind velocities of about 26 mph and less; all tests resulted in good flare performance. Furthermore, there is no indication that crosswind velocities negatively impact flare performance in the recent flare performance tests. These tests were conducted on various sizes of industrial flares (*i.e.,* effective diameters ranging between 12 and 54 inches) in winds of about 22 mph and less, and at relatively low flare tip velocities (*i.e.,* 10 feet per second or less). (See *Parameters for Properly Designed and Operated Flares,* in Docket ID Number EPA–HQ–OAR–2010–0682.)

We are aware of flare operating parameters that consider crosswind velocity; however, using the available flare performance test data, we were unable to determine a clear correlation that would be appropriate for all refinery flares. For example, the momentum flux ratio (MFR) is a measure of momentum strength of the flare exit gas relative to the crosswind (*i.e.,* the product of flare exit gas density and velocity squared divided by the product of air density and crosswind velocity squared). The plume buoyancy factor is the ratio of crosswind velocity to the flare exit gas velocity, and considers the area of the flare pipe. The power factor is the ratio of the power of the crosswind to the power of combustion of the flare gas. Because the available flare performance test data have relatively low flare tip velocities, and crosswind velocities were relatively constant during each test run, we are unable to examine these parameters to the fullest extent.

In light of the data available from performance tests (Gogolek et al., 2010), we asked peer reviewers whether the MFR could be used in crosswind velocities greater than 22 mph at the flare tip to indicate wake-dominated flame situations. We also asked for comment on observations that in the absence of crosswind greater than 22 mph, a low MFR does not necessarily indicate poor flare performance. Peer reviewers suggested that there are no data available from real industrial flares in winds greater than 22 mph to support that MFR could be used to identify wake-dominated flame situations. In addition, we received no further peer review comments that have caused us to reconsider the observation we made in the April 2012 technical report that in the absence of crosswind greater than 22 mph, a low MFR does not necessarily indicate poor flare performance. We request comment with supporting data and rationale on any of these, or other parameters, as a measure of wind effects on flare combustion efficiency.

We considered including observation requirements for detecting segmented or discontinuous wake-dominated flames, especially for winds greater than 22 mph (where limited test data is available). However, owners or operators of flares cannot control the wind speed, and it would be detrimental to increase the quantity of flared gases in high crosswind conditions in efforts to improve the MFR and reduce wake-dominated flow conditions. Furthermore, there is no indication that crosswind velocities negatively impact flare performance in the recent flare performance tests. For these reasons, we are not proposing any flare operating parameter(s) to minimize wind effects on flare combustion efficiency.

g. Impacts of the Flare Operating and Monitoring Requirements

The EPA expects that the newly proposed requirements for refinery flares discussed in this section will affect all flares at petroleum refineries. Based on data received as a result of the Refinery ICR, we estimate that there are 510 flares operating at petroleum refineries and that 285 of these receive flare vent gas flow on a regular basis (*i.e.,* other than during periods of startup, shutdown, and malfunction). Costs were estimated for each flare for a given refinery, considering operational type (*e.g.,* receive flare vent gas flow on a regular basis, use flare gas recovery systems to recover 100 percent of routine flare flow, handle events during startup, shutdown, or malfunction only, etc.) and current monitoring systems already installed on each individual flare. Costs for any additional monitoring systems needed were estimated based on installed costs received from petroleum refineries and, if installed costs were unavailable, costs were estimated based on vendor-purchased equipment. The baseline emission estimate and the emission

reductions achieved by the proposed rule were estimated based on current vent gas and steam flow data submitted by industry representatives. The results of the impact estimates are summarized in Table 4 of this preamble. We note that the requirements for refinery flares we are proposing in this action will ensure compliance with the Refinery MACT standards when flares are used as an APCD. As such, these proposed operational and monitoring requirements for flares at refineries have the potential to reduce excess emissions from flares by approximately 3,800 tpy of HAP, 33,000 tpy of VOC, and 327,000 metric tonnes per year of CO_2e. The VOC compounds are non-methane, non-ethane total hydrocarbons. According to the Component 2 database from the Refinery ICR, there are approximately 50 individual HAP compounds included in the emission inventory for flares, but many of these are emitted in trace quantities. A little more than half of the HAP emissions from flares are attributable to hexane, followed next by benzene, toluene, xylenes, and 1,3-butadiene. For more detail on the impact estimates, see the technical memorandum *Petroleum Refinery Sector Rule: Flare Impact Estimates* in Docket ID Number EPA–HQ–OAR–2010–0682.

TABLE 4—NATIONWIDE COST IMPACTS OF PROPOSED AMENDMENTS TO ENSURE PROPER FLARE PERFORMANCE

Affected source	Total capital investment (million $)	Total annualized costs (million $/yr)
Flare Monitoring	147	36.3

4. Vent Control Bypasses

a. Relief Valve Discharges

Refinery MACT 1 recognized relief valve discharges to be the result of malfunctions. Relief valves are designed to remain closed during normal operation and only release as the result of unplanned and/or unpredictable events. A release from a relief valve usually occurs during an over pressurization of the system. However, emissions vented directly to the atmosphere by relief valves in organic HAP service contain HAP that are otherwise regulated under Refinery MACT 1.

Refinery MACT 1 regulated relief valves through equipment leak provisions that applied only after the pressure relief occurred. In addition the rule followed the EPA's then-practice of exempting startup, shutdown and malfunction (SSM) events from otherwise applicable emission standards. Consequently, with relief valve releases defined as unplanned and nonroutine and the result of malfunctions, Refinery MACT 1 did not restrict relief valve releases to the atmosphere but instead treated them the same as all malfunctions through the SSM exemption provision.

In *Sierra Club* v. *EPA,* 551 F.3d 1019 (D.C. Cir. 2008), the Court determined that the SSM exemption violates the CAA. See section IV.E of this preamble for additional discussion. To ensure this standard is consistent with that decision, these proposed amendments remove the malfunction exemption in Refinery MACT 1 and 2 and provide that emissions of HAP may not be discharged to the atmosphere from relief valves in organic HAP service. To ensure compliance with this amendment, we are also proposing to require that sources monitor relief valves using a system that is capable of identifying and recording the time and duration of each pressure release and of notifying operators that a pressure release has occurred. Pressure release events from relief valves to the atmosphere have the potential to emit large quantities of HAP. Where a pressure release occurs, it is important to identify and mitigate it as quickly as possible. For purposes of estimating the costs of this requirement, we assumed that operators would install electronic monitors on each relief valve that vents to the atmosphere to identify and record the time and duration of each pressure release. However, we are proposing to allow owners and operators to use a range of methods to satisfy these requirements, including the use of a parameter monitoring system (that may already be in place) on the process operating pressure that is sufficient to indicate that a pressure release has occurred as well as record the time and duration of that pressure release. Based on our cost assumptions, the nationwide capital cost of installing these electronic monitors is $9.54 million and the annualized capital cost is $1.36 million per year.

As defined in the Refinery MACT standards, relief valves are valves used only to release unplanned, nonroutine discharges. A relief valve discharge results from an operator error, a malfunction such as a power failure or equipment failure, or other unexpected cause that requires immediate venting of gas from process equipment in order to avoid safety hazards or equipment damage. Even so, to the extent that there are atmospheric HAP emissions from relief valves, we are required to follow the Sierra Club ruling to address those emissions in our rule, and we can no longer exempt them as permitted malfunction emissions as we did under Refinery MACT 1. Our information indicates that there are approximately 12,000 pressure relief valves that vent to the atmosphere (based on the ICR responses) and that the majority of relief valves in the refining industry are not atmospheric, but instead are routed to flares (see letter from API, Docket Item Number EPA–HQ–OAR–2010–0682–0012). We request comment on our approach and on alternatives to our approach to regulating releases from pressure relief valves and also request commenters to provide information supporting any such comments.

b. Bypass Lines

For a closed vent system containing bypass lines that can divert the stream away from the APCD to the atmosphere, Refinery MACT 1 requires the owner or operator to either: (1) Install, maintain and operate a continuous parametric monitoring system (CPMS) for flow on the bypass line that is capable of detecting whether a vent stream flow is present at least once every hour, or (2) secure the bypass line valve in the non-diverting position with a car-seal or a lock-and-key type configuration. Under option 2, the owner or operator is also required to inspect the seal or closure mechanism at least once per month to verify the valve is maintained in the non-diverting position (see 40 CFR 63.644(c) for more details). We are proposing under CAA section 112(d)(2) and (3) that the use of a bypass at any time to divert a Group 1 miscellaneous process vent is a violation of the emission standard, and to specify that if option 1 is chosen, the owner or operator would be required to install,

maintain and operate a CPMS for flow that is capable of recording the volume of gas that bypasses the APCD. The CMPS must be equipped with an automatic alarm system that will alert an operator immediately when flow is detected in the bypass line. We are proposing this revision because, as noted above, APCD are not to be bypassed because doing so could result in a release of regulated organic HAP to the atmosphere. In *Sierra Club v. EPA,* 551 F.3d 1019 (D.C. Cir. 2008), the Court determined that standards under CAA section 112(d) must provide for compliance at all times and a release of uncontrolled HAP to the atmosphere is inconsistent with that requirement.

c. In Situ Sampling Systems (Onstream Analyzers)

The current Refinery MACT 1 definition of ''miscellaneous process vent'' states that ''in situ sampling systems (onstream analyzers)'' are not miscellaneous process vents. 40 CFR 63.641. For several reasons, we are proposing to remove ''in situ sampling systems (onstream analyzers)'' from the list of vents not considered miscellaneous process vents. First, the language used in this exclusion is inconsistent. We generally consider ''in situ sampling systems'' to be non-extractive samplers or in-line samplers. There are certain in situ sampling systems where the measurement is determined directly via a probe placed in the process stream line. Such sampling systems do not have an atmospheric vent, so excluding these from the definition of ''miscellaneous process vent'' is not meaningful. The parenthetical term ''onstream analyzers'' generally refers to sampling systems that feed directly to an analyzer located at the process unit, and has been interpreted to exclude the ''onstream'' analyzer's vent from the definition of miscellaneous process vents. As these two terms do not consistently refer to the same type of analyzer, the provision is not clear.

Second, we find that there is no technical reason to include analyzer vents in a list of vents not considered miscellaneous process vents. For extractive sampling systems and systems with purges, the equipment leak standards in Refinery MACT 1 require that the material be returned to the process or controlled. Thus, the only potential emissions from any sampling system compliant with the Refinery MACT 1 equipment leak provisions would be from the analyzer's ''exhaust gas'' vent. The parenthetical term ''onstream analyzers'' indicates that the focus of the exemption is primarily on the analyzer (or analyzer vent) rather than the sampling system. This phrase has been interpreted to exclude the ''onstream'' analyzer's vent from the definition of miscellaneous process vents. Analyzer venting is expected to be routine (continuous or daily intermittent venting).

We are proposing to delete this exclusion from the definition of ''miscellaneous process vent'' and to require these vents to meet the standards applicable to miscellaneous process vents at all times. We expect most analyzer vents to be Group 2 miscellaneous process vents because analyzer vents are not expected to exceed the 72 pounds per day (lb/day) emissions threshold for Group 1 miscellaneous process vents. However, if there are larger analyzer vents that exceed the 72 lb/day emissions threshold for Group 1 miscellaneous process vents, these emission sources would need to be controlled as a Group 1 miscellaneous process vent under this proposal. We solicit comment on the existence of any onstream analyzers that have VOC emissions greater than 72 lb/day and why such vents are not amenable to control.

d. Refinery Flares and Fuel Gas Systems

The current definition of ''miscellaneous process vent'' in Refinery MACT 1 states that ''gaseous streams routed to a fuel gas system'' are not miscellaneous process vents. Furthermore, the affected source subject to Refinery MACT 1 does not specifically include ''emission points routed to a fuel gas system, as defined in § 63.641 of this subpart.'' The EPA allowed these exemptions for streams routed to fuel gas systems because according to the 1994 preamble for Refinery MACT 1, ''these vents are already controlled to the most stringent levels achievable'' (59 FR 36141, July 15, 1994). Since gaseous streams routed to a fuel gas system are eventually burned as fuel, typically in a boiler or process heater, these combustion controls burning the gaseous streams as fuel effectively achieve this most stringent level of control (*i.e.,* 98-percent organic HAP reduction or an outlet organic HAP concentration of 20 ppmv for all vent streams). However, there can be instances when gaseous streams from the fuel gas system that would otherwise be combusted in a boiler or process heater are instead routed to a flare (*e.g.,* overpressure in the fuel gas system, used as flare sweep gas, used as flare purge gas). In cases where an emission source is required to be controlled in Refinery MACT 1 and 2 but is routed to a fuel gas system, we are proposing that any flare receiving gases from that fuel gas system must comply with the flare operating and monitoring requirements discussed in section IV.A.3 of this preamble.

B. What are the results and proposed decisions based on our technology review?

1. Refinery MACT 1—40 CFR Part 63, Subpart CC

Refinery MACT 1 sources include miscellaneous process vents, storage vessels, equipment leaks, gasoline loading racks, marine vessel loading operations, cooling towers/heat exchange systems, and wastewater.

a. Miscellaneous Process Vents

Many unit operations at petroleum refineries generate gaseous streams containing HAP. These streams may be routed to other unit operations for additional processing (*e.g.,* a gas stream from a reactor that is routed to a distillation unit for separation) or they may be sent to a blowdown system or vented to the atmosphere. Miscellaneous process vents emit gases to the atmosphere, either directly or after passing through recovery and/or APCD. Under 40 CFR 63.643, the owner or operator must reduce organic HAP emissions from miscellaneous process vents using a flare that meets the equipment specifications in 40 CFR 63.11 of the General Provisions (subpart A) or use APCD (*e.g.,* thermal oxidizers, carbon adsorbers) to reduce organic HAP emissions by 98 weight-percent or to a concentration of 20 parts per million by volume (ppmv) dry basis, corrected to 3-percent oxygen.

In the technology review, we did not identify any practices, processes or control technologies beyond those already required by Refinery MACT 1. Therefore, we are proposing that it is not necessary to revise Refinery MACT 1 requirements for miscellaneous process vents pursuant to CAA section 112(d)(6).

b. Storage Vessels

Storage vessels (also known as storage tanks) are used to store liquid and gaseous feedstocks for use in a process, as well as liquid and gaseous products coming from a process. Most storage vessels are designed for operation at atmospheric or near atmospheric pressures; high-pressure vessels are used to store compressed gases and liquefied gases. Atmospheric storage vessels are typically cylindrical with a vertical orientation, and they are constructed with either a fixed roof or a floating roof. Some, generally small,

atmospheric storage vessels are oriented horizontally. High pressure vessels are either spherical or horizontal cylinders.

Section 63.646(a) requires certain existing and new storage vessels to comply with 40 CFR 63.119 through 40 CFR 63.121 of the HON. Under 40 CFR 63.119 through 63.121, storage vessels must be equipped with an internal floating roof with proper seals, an external floating roof with proper seals, an external floating roof converted to an internal floating roof with proper seals or a closed vent system routed to an APCD that reduces HAP emissions by 95 percent. Storage vessels at existing sources that use floating roofs are not required under Refinery MACT 1 to install certain fitting controls included in 40 CFR 63.1119 of the HON (*e.g.,* gaskets for automatic bleeder vents, slit fabric covers for sample wells, flexible fabric seals or gasketed sliding covers for guidepoles and gasketed covers for other roof openings). See 40 CFR 63.646(c).

In 2012, we conducted a general analysis to identify the latest developments in practices, processes and control technologies for storage vessels at chemical manufacturing facilities and petroleum refineries, and we estimated the impacts of applying those practices, processes and technologies to model storage vessels. (See *Survey of Control Technology for Storage Vessels and Analysis of Impacts for Storage Vessel Control Options,* January 20, 2012, Docket Item Number EPA–HQ–OAR–2010–0871–0027.) We used this analysis as a starting point for conducting the technology review for storage vessels at refineries. In this analysis, we identified fitting controls, particularly controls for floating roof guidepoles, and monitoring equipment (liquid level monitors and leak monitors) as developments in practices, processes and control technologies for storage vessels. In our refinery-specific review, we also noted that the Group 1 storage vessel size and vapor pressure thresholds in Refinery MACT 1 were higher than those for storage vessels in MACT standards for other similar industries. Therefore, we also evaluated revising the Group 1 storage vessel thresholds as a development in practices for storage vessels in the refining industry.

We used data from our 2011 ICR to evaluate the impacts of requiring the additional controls identified in the technology review for the petroleum refinery source category. The emission reduction options identified during the technology review are: (1) Requiring guidepole controls and other fitting controls for existing external or internal floating roof tanks as required in the Generic MACT for storage vessels (40 CFR part 63, subpart WW) in 40 CFR 63.1063; (2) option 1 plus revising the definition of Group 1 storage vessel to include smaller capacity storage vessels and/or storage vessels containing materials with lower vapor pressures and (3) option 2 plus requiring additional monitoring to prevent roof landings, liquid level overfills and to identify leaking vents and fittings from tanks. We identified options 1 and 2 as developments in practices, processes and control technologies because these options are required for similar tanks in some chemical manufacturing MACT standards and we believe they are technologically feasible for storage vessels at refineries (*e.g.,* Generic MACT, the HON). Option 3 is also an improvement in practices because these monitoring methods have been required for refineries by other regulatory agencies.

Under option 1, we considered the impacts of requiring improved deck fittings and controls for guidepoles as is required for other chemical manufacturing sources in the Generic MACT. Specifically, we considered these controls for storage vessels with existing internal or external floating roof tanks. This option also includes the inspection, recordkeeping, and reporting requirements set forth in the Generic MACT to account for the additional requirements for fitting controls. We are aware of recent waiver requests to EPA to allow in-service, top-side inspections instead of the out-of-service inspections required on a 10-year basis for internal floating roof tanks for facilities that are currently subject to 40 CFR part 60, subpart Kb and Refinery MACT 1. The requirements of Generic MACT allow for this option if there is visual access to all the deck components. Under option 1, we considered the Generic MACT provisions for in-service, top-side inspection. We are requesting comment on whether or not these in-service inspections are adequate for identifying conditions that are indicative of deck, fitting, and rim seal failures; we are also requesting comment on methods to effectively accomplish top-side inspections.

For option 2, we evaluated revising the definition of Group 1 storage vessels to include smaller capacity storage vessels and/or storage vessels with lower vapor pressure, such that these additional storage vessels would be subject to the Group 1 control requirements. For storage vessels at existing sources, Refinery MACT 1 currently defines Group 1 storage vessels to be those with a capacity of 177 cubic meters (46,760 gallons) or greater, and a true vapor pressure of 10.4 kilopascals (1.5 pounds per square inch absolute (psia)) or greater. Under option 2, we evaluated the impacts of changing the definition of Group 1 storage vessels to include storage vessels with a capacity of 151 cubic meters (40,000 gallons) or greater and a true vapor pressure of 5.2 kilopascals (0.75 psia) or greater, and also evaluated including storage vessels with a capacity of 76 cubic meters (20,000 gallons) or greater (but less than 151 cubic meters), provided the true vapor pressure of the stored liquid is 13.1 kilopascals (1.9 psia) or greater. These thresholds are consistent with storage vessel standards already required for the chemical industry (*e.g.,* the HON). We believe the predominant effect of changing these thresholds will be fixed roof tanks at existing petroleum refineries shifting from Group 2 storage vessels to Group 1 storage vessels. These fixed roof tanks would thus need to be retrofitted with floating roofs or vented to an APCD in order to comply with the provisions for Group 1 storage vessels. We estimated the impacts of option 2 by assuming all uncontrolled fixed roof storage vessels that meet or exceed the proposed new applicability requirements for Group 1 storage vessels (based on the information collected in the Refinery ICR) would install an internal floating roof with a single rim seal and deck fittings to the existing fixed roof tank. The costs of these fixed roof retrofits were added to the costs determined for option 1 to determine the cost of option 2.

Under option 3, we considered the impacts of including additional monitoring requirements for Group 1 storage vessels (in addition to fitting controls and fixed roof retrofits considered under options 1 and 2). The monitoring requirements evaluated include monitoring of internal or external floating roof tanks with EPA Method 21 (of 40 CFR part 60, Appendix A–7) or optical gas imaging for fittings, and requiring the use of liquid level overfill warning monitors and roof landing warning monitors. These costs were estimated based on the total number of Group 1 storage vessels considering the change in the applicability thresholds included in option 2. For further details on the assumptions and methodologies used in this analysis, see the technical memorandum titled *Impacts for Control Options for Storage Vessels at Petroleum Refineries,* in Docket ID Number EPA–HQ–OAR–2010–0682.

Table 5 of this preamble presents the impacts for the three options considered. Although the options were considered cumulatively, the calculation of the incremental cost effectiveness allows us to assess the impacts of the incremental change between the options. As seen by the incremental cost effectiveness column in Table 5, both options 1 and 2 result in a net cost savings considering the VOC recovery credit for product not lost to the atmosphere from the storage vessel.[28] We seek comment on the appropriateness of the VOC recovery credit we used. The incremental cost effectiveness for option 3 exceeds $60,000 per ton of HAP removed. We consider option 3 not to be cost effective and are not proposing to require this additional monitoring.

Based on this analysis, we consider option 2 to be cost effective. We are, therefore, proposing to revise Refinery MACT 1 to cross-reference the corresponding storage vessel requirements in the Generic MACT (including requirements for guidepole controls and other fittings as well as inspection requirements), and to revise the definition of Group 1 storage vessels to include storage vessels with capacities greater than or equal to 20,000 gallons but less than 40,000 gallons if the maximum true vapor pressure is 1.9 psia or greater and to include storage tanks greater than 40,000 gallons if the maximum true vapor pressure is 0.75 psia or greater.

TABLE 5—NATIONWIDE EMISSIONS REDUCTION AND COST IMPACTS OF CONTROL OPTIONS FOR STORAGE VESSELS AT PETROLEUM REFINERIES

Control option	Capital cost (million $)	Annualized costs without recovery credits (million $/yr)	Emissions reduction, VOC (tpy)	Emissions reduction, HAP (tpy)	Cost effectiveness ($/ton HAP)	Total annualized costs with VOC recovery credit (million $/yr)	Overall cost effectiveness with VOC Rrcovery credit ($/ton HAP)	Incremental cost effectiveness with VOC recovery credit ($/ton HAP)
1	11.9	1.8	11,800	720	2,470	(4.8)	(6,690)	
2	18.5	3.1	14,600	910	3,430	(5.0)	(5,530)	(1,140)
3	36.4	9.6	16,000	1,000	9,580	0.56	560	61,500

c. Equipment Leaks

Equipment leaks are releases of process fluid or vapor from processing equipment, including pump and compressor seals, process valves, relief devices, open-ended valves and lines, flanges and other connectors, agitators and instrumentation systems. These releases occur primarily at the interface between connected components of equipment or in sealing mechanisms.

Refinery MACT 1 requires the owner or operator of an existing source to comply with the equipment leak provisions in 40 CFR part 60, subpart VV (Standards of Performance for Equipment Leaks of VOC in the Synthetic Organic Chemicals Manufacturing Industry) for all equipment in organic HAP service. The term ''in organic HAP service'' means that a piece of equipment either contains or contacts a fluid (liquid or gas) that is at least 5 percent by weight of total organic HAP. Refinery MACT 1 specifies that the owner or operator of a new source must comply with the HON, as modified by Refinery MACT 1. The provisions for both new and existing sources require inspection (either through instrument monitoring using EPA Method 21 of 40 CFR part 60, Appendix A–7, or other method such as visible inspection) and repair of leaking equipment. For existing sources, the leak definition under 40 CFR part 60, subpart VV triggers repair at an instrument reading of 10,000 parts per million (ppm) for all equipment monitored using EPA Method 21 of 40 CFR part 60, Appendix A–7 (*i.e.,* pumps and valves; instrument monitoring of equipment in heavy liquid service and connectors is optional). For new sources, the Refinery MACT 1-modified version of the HON triggers repair of leaks for pumps at 2,000 ppm and for valves at 1,000 ppm. Refinery MACT 1 requires new and existing sources to install a cap, plug or blind flange, as appropriate, on open-ended valves or lines. Refinery MACT 1 does not require instrument monitoring of connectors for either new or existing sources.

We conducted a general analysis to identify the latest developments in practices, processes and control technologies applicable to equipment leaks at chemical manufacturing facilities and petroleum refineries, and we estimated the impacts of applying the identified practices, processes and technologies to several model plants. (See *Analysis of Emissions Reduction Techniques for Equipment Leaks,* December 21, 2011, Docket Item Number EPA–HQ–OAR–2010–0869–0029.) We used this general analysis as a starting point for conducting the technology review for equipment leaks at refineries, but did not identify any developments beyond those in the general analysis. We estimated the impacts of applying the practices, processes and technologies identified in the general analysis to equipment leaks in petroleum refinery processes using the information we collected through the 2011 Refinery ICR. In general, leak detection and repair (LDAR) programs have been used by many industries for years to control emissions from equipment leaks. Over the years, repair methods have improved and owners and operators have become more proficient at implementing these programs. The specific developments identified include: (1) Requiring repair of leaks at a concentration of 500 ppm for valves and 2,000 ppm for pumps for new and existing sources (rather than 10,000 ppm for valves and pumps at existing sources and 1,000 for valves at new sources); (2) requiring monitoring of connectors using EPA Method 21 (of 40 CFR part 60, Appendix A–7) and repair of leaks for valves and pumps at a concentration of 500 ppm; and (3) allowing the use of optical gas imaging devices as an alternative method of monitoring.

The first option we evaluated was to require repair based on a leak definition of 500 ppm for valves and a leak definition of 2,000 ppm for pumps at both new and existing sources. The nationwide costs and emission reduction impacts of applying those lower leak definitions to equipment leaks at petroleum refineries are shown in Table 6 of this preamble. For further details on the assumptions and methodologies used in this analysis, see the technical memorandum titled *Impacts for Equipment Leaks at Petroleum Refineries,* in Docket ID Number EPA–HQ–OAR–2010–0682.

[28] The VOC recovery credit is $560 per ton, based on $1.75/gal price for generic refinery product (gasoline/diesel fuel). (See the technical memorandum titled *Impacts for Control Options for Storage Vessels at Petroleum Refineries,* in Docket ID Number EPA–HQ–OAR–2010–0682 for more details.)

The emissions reduction results in product not being lost by a leak; this additional product can be sold to generate revenue, referred to as a VOC recovery credit. Table 6 shows costs and cost effectiveness both with and without the VOC recovery credit. Based on the estimated organic HAP emission reductions of 24 tpy and the cost effectiveness of $14,100 per ton of organic HAP (including VOC recovery credit), we consider lowering the leak definition not to be a cost-effective option for reducing HAP emissions. We are, therefore, proposing that it is not necessary to revise Refinery MACT 1 pursuant to CAA section 112(d)(6) to require repair of leaking valves at 500 ppm or greater and repair of leaking pumps at 2,000 ppm or greater.

TABLE 6—NATIONWIDE EMISSIONS REDUCTION AND COST IMPACTS OF MONITORING AND REPAIR REQUIREMENTS AT LOWER LEAK DEFINITIONS

[500 ppm for valves; 2,000 ppm for pumps]

Capital cost (million $)	Annualized costs without recovery credits (million $/yr)	Emissions reduction, VOC (tpy)	Emissions reduction, HAP (tpy)	Cost effectiveness ($/ton VOC)	Cost effectiveness ($/ton HAP)	Total annualized costs with VOC recovery credit (million $/yr)	Overall cost effectiveness with VOC recovery credit ($/ton VOC)	Overall cost effectiveness with VOC recovery credit ($/ton HAP)
1.22	0.53	342	24	1,550	22,100	0.34	987	14,100

We note that we are aware that some owners and operators are required to repair leaking valves as low as 100 ppm and pumps as low as 500 ppm. However, we consider requiring repair of leaking valves at 500 ppm or greater and repair of leaking pumps at 2,000 ppm or greater not to be cost effective. As documented in *Analysis of Emissions Reduction Techniques for Equipment Leaks* (December 21, 2011, in Docket ID Number EPA–HQ–OAR–2010–0869), the cost effectiveness for this option would be even higher than the values shown in Table 6 of this preamble.

The second option we considered was connector monitoring and repair. Several standards applying to chemical manufacturing facilities, including the HON, include requirements for connector monitoring using EPA Method 21 (of 40 CFR part 60, Appendix A–7) and requirements for repair of any connector leaks above 500 ppm VOC. Neither the Refinery MACT 1 nor the NSPS for equipment leaks from refineries (40 CFR part 60, subpart GGG and 40 CFR part 60, subpart GGGa) currently require connector monitoring and repair (provisions are provided for connector monitoring in Refinery MACT 1, but they are optional). We evaluated the costs and emissions reduction of requiring connector monitoring and repair requirements for equipment leaks at refineries. The nationwide costs and emission reduction impacts, both with and without VOC recovery credit, are shown in Table 7 of this preamble. For further details on the assumptions and methodologies used in this analysis, see the technical memorandum titled *Impacts for Equipment Leaks at Petroleum Refineries,* in Docket ID Number EPA–HQ–OAR–2010–0682. Based on the high annualized cost ($13.9 million per year) and high cost effectiveness ($153,000 per ton of HAP) of connector monitoring and repair for equipment leaks at refineries, we are proposing that it is not necessary to revise Refinery MACT 1 pursuant to CAA section 112(d)(6) to require connector monitoring using EPA Method 21 (of 40 CFR part 60, Appendix A–7) and repair.

TABLE 7—NATIONWIDE EMISSIONS REDUCTION AND COST IMPACTS OF APPLYING MONITORING AND REPAIR REQUIREMENTS TO CONNECTORS AT PETROLEUM REFINERIES

[500 ppm]

Capital cost (million $)	Annualized costs without recovery credits (million $/yr)	Emissions reduction, VOC (tpy)	Emissions reduction, HAP (tpy)	Cost effectiveness ($/ton VOC)	Cost effectiveness ($/ton HAP)	Total annualized costs with VOC recovery credit (million $/yr)	Overall cost effectiveness with VOC recovery credit ($/ton VOC)	Overall cost effectiveness with VOC recovery credit ($/ton HAP)
52.1	13.9	1,230	86	11,300	161,000	13.2	10,700	153,000

Another development identified was to provide optical gas imaging provisions (including the required instrument specifications, monitoring frequency, and repair threshold) as an alternative monitoring option where instrument monitoring using EPA Method 21 of 40 CFR part 60, Appendix A–7, is required in Refinery MACT 1. Since Refinery MACT 1 was issued, there have been developments in LDAR work practices using remote sensing technology for detecting leaking equipment. In this method of detecting leaks, an operator scans equipment using a device or system specially designed to use one of several types of remote sensing techniques, including optical gas imaging of infrared wavelengths, differential absorption light detection and ranging (DIAL), and solar occultation flux.

The most common remote sensing instrument is a passive system that creates an image based on the absorption of infrared wavelengths (also referred to as a ''camera''). A gas cloud containing certain hydrocarbons (*i.e.,* leaks) will show up as black or white plumes (depending on the instrument settings and characteristics of the leak) on the optical gas imaging instrument screen. This type of instrument is the device on which our evaluation of optical gas imaging instruments is based, and the instrument to which we are referring when we use the term ''optical gas imaging instrument.'' These optical gas imaging instruments can be used to identify specific pieces of equipment that are leaking. Other optical methods, such as DIAL and solar occultation flux, are used primarily to assess emissions downwind of a source. These methods cannot be used to identify specific leaking equipment; they would only measure the aggregate emissions from all equipment and any other source up-wind of the measurement location. While we did review these technologies as discussed further (see the discussion under fenceline monitoring, section IV.B.1.h of this preamble), we do not consider DIAL and solar occultation flux methods to be suitable alternatives to EPA Method 21 for monitoring equipment leaks and are not considering them further in our technology review for equipment leaks.

We expect that all refinery streams ''in organic HAP service'' will include at least one of the compounds visible with an optical gas imaging instrument, such as benzene, methane, propane or butane. Therefore, it is technically feasible to use an optical gas imaging instrument to detect leaks at petroleum refineries. The optical gas imaging device can monitor many more pieces of equipment than can be monitored using instrument monitoring over the same period of time, and we expect that specific requirements for using an optical gas imaging device to detect leaks without accompanying instrument monitoring could be an appropriate alternative to traditional leak detection methods (EPA Method 21, as specified in 40 CFR part 60, Appendix A–7).

Owners and operators currently have the option to use the Alternative Work Practice To Detect Leaks From Equipment (AWP) at 40 CFR 63.11(c), (d) and (e). This AWP includes provisions for using optical gas imaging in combination with annual monitoring using EPA Method 21 of 40 CFR part 60, Appendix A–7. In this proposal, we are considering the use of optical gas imaging without an accompanying requirement to conduct annual monitoring using EPA Method 21, and developing a protocol for using optical gas imaging techniques. We anticipate proposing the protocol as Appendix K to 40 CFR part 60. Rather than specifying the exact instrument that must be used, this protocol would outline equipment specifications, calibration techniques, required performance criteria, procedures for conducting surveys and training requirements for optical gas imaging instrument operators. This protocol would also contain techniques to verify that the instrument selected can image the most prevalent chemical in the monitored process unit. Because field conditions greatly impact detection of the regulated material using optical gas imaging, the protocol would describe the impact these field conditions may have on readings, how to address them and instances when monitoring with this technique is inappropriate. Finally, the protocol would also address difficulties with identifying equipment and leaks in dense industrial areas.

Pursuant to CAA section 112(d)(6), we are proposing to allow refineries to meet the LDAR requirements in Refinery MACT 1 by monitoring for leaks via optical gas imaging in place of EPA Method 21 (of 40 CFR part 60, Appendix A–7), using the monitoring requirements to be specified in Appendix K to 40 CFR part 60. When Appendix K is proposed, we will request comments on that appendix and how those requirements would apply for purposes of this proposed action. We will not take final action adopting use of Appendix K to 40 CFR part 60 for optical gas imaging for refineries subject to Refinery MACT 1 until such time as we have considered any comments on that protocol as it would apply to refineries. We do not yet know the exact requirements of Appendix K to 40 CFR part 60, and this cannot provide a reliable estimate of potential costs at this time. However, we have calculated an initial estimate of the potential costs and emission reduction impacts, assuming that Appendix K to 40 CFR part 60 is similar to the AWP without the annual monitoring using EPA Method 21 of 40 CFR part 60, Appendix A–7. For more information on these potential impacts, see the technical memorandum titled *Impacts for Equipment Leaks at Petroleum Refineries,* in Docket ID Number EPA–HQ–OAR–2010–0682.

d. Gasoline Loading Racks

Loading racks are the equipment used to fill gasoline cargo tanks, including loading arms, pumps, meters, shutoff valves, relief valves and other piping and valves. Emissions from loading racks may be released when gasoline loaded into cargo tanks displaces vapors inside these containers. Refinery MACT 1 specifies that Group 1 gasoline loading racks at refineries must comply with the requirements of the National Emission Standards for Gasoline Distribution Facilities (Bulk Gasoline Terminals and Pipeline Breakout Stations) in 40 CFR part 63, subpart R. The standard specified in 40 CFR part 63, subpart R is an emission limit of 10 milligrams of total organic compounds per liter of gasoline loaded (mg/L). Additionally, 40 CFR part 63, subpart R requires all tank trucks and railcars that are loaded with gasoline to undergo annual vapor tightness testing in accordance with EPA Method 27 of 40 CFR part 60, Appendix A–8.

For our technology review of Group 1 gasoline loading racks subject to Refinery MACT 1, we relied on two separate analyses. First, we previously conducted a technology review for gasoline distribution facilities (71 FR 17353, April 6, 2006), in which no new control systems were identified. Second, more recently, we conducted a general analysis to identify any developments in practices, processes and control technologies for transfer operations at chemical manufacturing facilities and petroleum refineries. (See *Survey of Control Technology for Transfer Operations and Analysis of Impacts for Transfer Operation Control Options,* January 20, 2012, Docket Item Number EPA–HQ–OAR–2010–0871–0021.) We identified several developments as part of this analysis and evaluated the impacts of applying the developments to gasoline loading racks subject to Refinery MACT 1. We have not identified any developments beyond those in the second analysis. The identified developments include controlling loading racks above specific throughput thresholds by submerged loading and by venting displaced emissions from the transport vehicles through a closed vent system to an APCD that reduces organic regulated material emissions by at least 95 percent.

We evaluated the emissions projected using this control technique for a range of different gasoline vapor pressures (to consider the different seasonal formulations of gasoline). We determined that submerged loading in combination with 95-percent control of displaced vapors would allow emissions of 12 to 42 mg/L of gasoline loaded, depending on the vapor pressure of the gasoline (see *Evaluation of the Stringency of Potential Standards for Gasoline Loading Racks at Petroleum Refineries* in Docket ID Number EPA–HQ–OAR–2010–0682.) The current Refinery MACT 1 emission limit for gasoline loading is 10 mg/L of gasoline loaded. We did not identify any developments in practices, process and control technologies for gasoline loading racks that would reduce emissions beyond the levels already in Refinery MACT 1. Therefore, we are proposing that it is not necessary to revise Refinery MACT 1 requirements for gasoline loading racks pursuant to CAA section 112(d)(6).

e. Marine Vessel Loading Operations

Marine vessel loading operations load and unload liquid commodities in bulk, such as crude oil, gasoline and other fuels, and naphtha. The cargo is pumped from the terminal's large, above-ground storage tanks through a network of pipes and into a storage compartment (tank) on the vessel. The HAP emissions are the vapors that are displaced during the filling operation. Refinery MACT 1 specifies that marine tank vessel loading operations at refineries must comply with the requirements in 40 CFR part 63, subpart Y (National Emission Standards for Marine Tank Vessel Loading Operations, ''Marine Vessel MACT'').

We previously completed a technology review of the Marine Vessel MACT (40 CFR part 63, subpart Y) and issued amendments to subpart Y in

2011 (76 FR 22595, Apr. 21, 2011). The analysis conducted for the marine vessel loading source category specifically considered loading of petroleum products such as conventional and reformulated gasoline. As such, the conclusions drawn from this analysis are directly applicable to marine vessel loading operations at petroleum refineries. We have not identified any developments beyond those addressed in that analysis.

The Marine Vessel MACT required add-on APCD for loading operations with HAP emissions equal to or greater than 10 tpy of a single pollutant or 25 tpy of cumulative pollutants (referred to as ''10/25 tpy''). In our technology review of the Marine Vessel MACT standards, we considered the use of add-on APCD for marine vessel loading operations with HAP emissions less than 10/25 tpy. We also evaluated the costs for lean oil absorption systems as add-on APCD under the Marine Vessel MACT technology review. Depending on the throughput of the vessel, costs ranged from $77,000 per ton HAP removed for barges to $510,000 per ton HAP removed for ships ($3,900 per ton VOC removed to $25,000 per ton VOC removed) (see *Cost Effectiveness and Impacts of Lean Oil Absorption for Control of Hazardous Air Pollutants from Gasoline Loading—Promulgation* in Docket Item Number EPA–HQ–OAR–2010–0600–0401). We consider requiring add-on APCD for these smaller marine vessel loading operations not to be cost effective.

As part of the technology review of 40 CFR part 63, subpart Y, we also considered requiring marine vessel loading operations with emissions less than 10/25 tpy and offshore operations to use submerged loading (also referred to as submerged filling). We did include this requirement in the Marine Vessel MACT. However, when we amended the Marine Vessel MACT, we specifically excluded marine vessel loading operations at petroleum refineries from these provisions, deferring the decisions to include this requirement until we performed the technology review for Refinery MACT 1. The submerged filling requirement in 40 CFR part 63, subpart Y cites the cargo filling line requirements developed by the Coast Guard in 46 CFR 153.282. We project that applying the submerged filling requirements to marine vessel loading operations at petroleum refineries will have no costs or actual emission reductions because marine vessels carrying bulk liquids, liquefied gases or compressed gas hazardous materials are already required by 46 CFR 153.282 to have compliant ''submerged fill'' cargo lines that also meet the requirements of the Marine Vessel MACT. While we do not anticipate that this requirement will affect actual emissions, it will lower the allowable emissions for these sources under Refinery MACT 1. Therefore, we are proposing, pursuant to CAA section 112(d)(6), to amend 40 CFR part 63, subpart Y to delete the exclusion for marine vessel loading operations at petroleum refineries, which would require small marine vessel loading operations (*i.e.,* operations with HAP emissions less than 10/25 tpy) and offshore marine vessel loading operations to use submerged filling based on the cargo filling line requirements in 46 CFR 153.282.

f. Cooling Towers/Heat Exchange Systems

Heat exchange systems include equipment necessary to cool heated non-contact cooling water prior to returning the cooling water to a heat exchanger or discharging the water to another process unit, waste management unit or to a receiving water body. Heat exchange systems are designed as closed-loop recirculation systems with cooling towers or once-through systems that do not recirculate the cooling water through a cooling tower. Heat exchangers in heat exchange systems are constructed with tubes designed to prevent contact between hot process fluids and cooling water. Heat exchangers occasionally develop leaks that allow process fluids to enter the cooling water. The volatile HAP and other volatile compounds in these process fluids are then emitted to the atmosphere due to stripping in a cooling tower or volatilization from a cooling water pond or receiving water body.

We established MACT standards for heat exchange systems at refineries in 2009 (see 74 FR 55686, October 28, 2009, as amended at 75 FR 37731, June 30, 2010). The EPA received a petition for reconsideration from the American Petroleum Institute (API) and granted reconsideration on certain issues. On June 20, 2013, we issued a final rule addressing the petition, clarifying rule provisions, and revising the monitoring provisions to provide additional flexibility (78 FR 37133). We are not aware of any developments in processes, practices or control technologies beyond those we recently considered in our analysis of emission reduction techniques for heat exchange systems, which can be found in the docket (Docket Item Number EPA–HQ–OAR–2003–0146–0229). Therefore, we are proposing that it is not necessary to revise Refinery MACT 1 requirements for heat exchange systems pursuant to CAA section 112(d)(6).

g. Wastewater Treatment

Wastewater collection includes components such as drains, manholes, trenches, junction boxes, sumps, lift stations and sewer lines. Wastewater treatment systems are divided into three categories: primary treatment operations, which include oil-water separators and equalization basins; secondary treatment systems, such as biological treatment units or steam strippers; and tertiary treatment systems, which further treat or filter wastewater prior to discharge to a receiving body of water or reuse in a process.

Refinery MACT 1 requires wastewater streams at a new or existing refinery to comply with 40 CFR 61.340 through 61.355 of the NESHAP for Benzene Waste Operations (BWON) in 40 CFR part 61, subpart FF. The BWON requires control of wastewater collection and treatment units for facilities with a total annual benzene quantity of greater than or equal to 10 megagrams per year (Mg/yr). Individual waste streams at refineries with a total annual benzene quantity greater than or equal to 10 Mg/yr are not required to adopt controls if the flow-weighted annual average benzene concentration is less than 10 parts per million by weight (ppmw) or the flow rate is less than 0.02 liters per minute at the point of generation. The BWON requires affected waste streams to comply with one of several options for controlling benzene emissions from waste management units and for treating the wastes containing benzene (55 FR 8346, March 7, 1990; 58 FR 3095, January 7, 1993).

Although the BWON specifically regulates benzene only, benzene is considered a surrogate for organic HAP from wastewater treatment systems at petroleum refineries. Benzene is present in nearly all refinery process streams. It is an excellent surrogate for wastewater pollutants because its unique chemical properties cause it to partition into the wastewater more readily than most other organic chemicals present at petroleum refineries. We stated our rationale regarding the use of benzene as a surrogate for refinery HAP emissions from wastewater in the original preamble to Refinery MACT 1 (59 FR 36133, July 15, 1994).

We performed a technology review for wastewater treatment systems to identify different control technologies for reducing emissions from wastewater treatment systems. We also reviewed the current standards for wastewater treatment systems in different rules

including the HON, the proposed NSPS for wastewater systems at petroleum refineries, and the BWON (See *Technology Review for Industrial Wastewater Collection and Treatment Operations at Petroleum Refineries,* in Docket ID Number EPA–HQ–OAR–2010–0682.) We identified several developments in processes, practices and control technologies for wastewater treatment, and evaluated the cost and cost effectiveness of each of those developments: (1) requiring wastewater drain and tank controls at refineries with a total annual benzene (TAB) quantity of less than 10 Mg/yr; (2) requiring specific performance parameters for an enhanced biological unit (EBU) beyond those required in the BWON; and (3) requiring wastewater streams with a VOC content of 750 ppmv or higher to be treated by steam-stripping prior to any other treatment process for facilities with high organic loading rates (*i.e.,* facilities with total annualized benzene quantity of 10 Mg/yr or more). These options are, for the most part, independent of each other, so the costs and cost effectiveness of each option are considered separately.

Option 1 was evaluated because refineries with a total annual benzene quantity of less than 10 Mg/yr are not required to install additional controls on their wastewater treatment system. Thus, these refineries are limiting the amount of benzene produced in wastewater streams to less than 10 Mg/yr, which effectively limits their benzene emissions from wastewater to less than 10 Mg/yr.

Option 2 is intended to improve the performance of wastewater treatment systems that use an EBU, and thereby achieve additional emission reductions. The BWON, as it applies under Refinery MACT 1, has limited operational requirements for an EBU. Available data suggest that these systems are generally effective for degrading benzene and other organic HAP; however, without specific performance or operational requirements, the effectiveness of the EBU to reduce emissions can be highly variable. Under option 2, more stringent operating requirements are considered for the EBU at refineries.

Option 3 considers segregated treatment of wastewater streams with a volatile organic content of greater than 750 ppmw, or high-strength wastewater streams, directly in a steam stripper (*i.e.,* not allowing these streams to be mixed and treated in the EBU). Preliminary investigations revealed direct treatment of wastewater by steam-stripping is only cost effective for high-strength wastewater streams of sufficient quantities. For more detail regarding the impact analysis for these control options, see *Technology Review for Industrial Wastewater Collection and Treatment Operations at Petroleum Refineries,* in Docket ID Number EPA–HQ–OAR–2010–0682.

Table 8 provides the nationwide impacts for the control options. Based on the costs and emission reductions for each of the options, we consider none of the options identified to be cost effective for reducing emissions from petroleum refinery wastewater treatment systems. We are proposing that it is not necessary to revise Refinery MACT 1 to require additional controls for wastewater treatment systems pursuant to CAA section 112(d)(6).

TABLE 8—NATIONWIDE EMISSIONS REDUCTION AND COST IMPACTS OF CONTROL OPTIONS CONSIDERED FOR WASTEWATER TREATMENT SYSTEMS AT PETROLEUM REFINERIES

Control option	Capital cost (million $)	Annualized costs (million $/yr)	Emissions reduction, VOC (tpy)	Emissions reduction, HAP (tpy)	Cost effectiveness ($/ton VOC)	Cost effectiveness ($/ton HAP)
1	19.7	4.2	592	158	7,100	26,600
2	223	28.6	2,060	549	13,900	52,100
3	142	50.7	3,480	929	14,500	54,500

h. Fugitive Emissions

The EPA recognizes that, in many cases, it is impractical to directly measure emissions from fugitive emission sources at refineries. Direct measurement of fugitive emissions from sources such as wastewater collection and treatment operations, equipment leaks and storage vessels can be costly and difficult, especially if required to be deployed on all sources of fugitives within a refinery and certainly on a national scale. This is a major reason why fugitive emissions associated with refinery processes are generally estimated using factors and correlations rather than by direct measurement. For example, equipment leak emissions are estimated using factors and correlations between leak rates and concentrations from EPA Method 21 instrument monitoring. Fugitive emissions from wastewater collection and treatment are estimated based on process data, material balances and empirical correlations. Relying on these kinds of approaches introduces uncertainty into the emissions inventory for fugitive emission sources.

For each of the individual fugitive emission points, we evaluated developments in processes, practices and control technologies for measuring and controlling fugitive emissions from these sources. For storage vessels, as discussed in section IV.B.1.b of this preamble, we are proposing to lower the size and vapor pressure threshold and to require additional fittings on tanks, similar to requirements for tanks in the chemical industry because we project a cost savings due to recovered product. However, we considered but are not proposing to require EPA Method 21 of 40 CFR part 60, Appendix A–7 or optical gas imaging monitoring to identify fugitive emissions from each individual storage vessel. For equipment leaks, as discussed in section IV.B.1.c of this preamble, we considered lowering the leak definition for equipment at petroleum refineries from the current Refinery MACT 1 level of 10,000 ppm for pumps and valves down to the 500 ppm definition that is used in all the other MACT standards applying to the chemical industry, as well as adding a requirement for connectors to be included in the LDAR program because we consider these more stringent LDAR requirements to be technically feasible for the petroleum refining industry. Nevertheless, we rejected these options under the technology review as not being cost effective, based on costs projected by using the industry-reported emissions inventories. We are, however, proposing to adopt the use of optical gas imaging devices following 40 CFR part 60, Appendix K as an alternative to using EPA Method 21, which will be an alternative available to petroleum refiners that could offer cost savings, once the monitoring protocol set forth in Appendix K is promulgated. For wastewater treatment systems, as discussed in section IV.B.1.g of this

preamble, we considered both lowering the threshold for refinery wastewater streams requiring control, as well as requiring refineries to comply with enhanced monitoring and operating limits for EBU, such as the requirements contained in most of the chemical sector MACT standards, because we consider these requirements to be technically feasible for the refining industry. However, like equipment leaks, we are rejecting further controls for wastewater because using the industry-reported emissions inventory, we determined that further wastewater requirements are not cost effective.

Although we are not proposing to require a number of additional control options for fugitive emission sources because we determined them not cost effective, we remain concerned regarding the potential for high emissions from these fugitive sources due to the difficulties in monitoring actual emission levels. For example, the regulations require infrequent monitoring of storage tank floating roof seals (visual inspections are required annually and direct inspections of primary seals are required only when the vessel is emptied and degassed, or no less frequently than once every 5 years for internal floating roofs or 10 years for external floating roofs with secondary seals). Given these inspection frequencies, tears or failures in floating roof seals may exist for years prior to being noticed, resulting in much higher emissions than expected or estimated for these sources in the emissions inventory. Similarly, water seals, which are commonly used to control emissions from wastewater collection drain systems, may be difficult to monitor (*e.g.,* some are underground so visible emissions tests cannot be performed) and are subject only to infrequent inspections. During hot, dry months, these water seals may dry out, leaving an open pathway of vapors to escape from the collection system to the atmosphere. Significant emission releases may occur from these ''dry'' drains, which could persist for long periods of time prior to the next required inspection.

Because the requirements and decisions that we are proposing in this action are based upon the emissions inventory reported by facilities in response to the 2011 Refinery ICR, and considering the uncertainty with estimating emissions from fugitive emission sources, we believe that it is appropriate under CAA section 112(d)(6) to require refiners to monitor, and if necessary, take corrective action to minimize fugitive emissions, to ensure that facilities appropriately manage emissions of HAP from fugitive sources. In other words, in this action, we are proposing a HAP concentration to be monitored in the ambient air around a refinery, that if exceeded, would trigger corrective action to minimize fugitive emissions. The fenceline concentration action level would be set at a level such that no facility in the category would need to undertake additional corrective measures if the facility's estimate of emissions from fugitive emissions is consistent with the level of fugitive emissions actually emitted. On the other hand, if a facility's estimate of fugitive HAP emissions was not accurate, the owner or operator may need to take some corrective action to minimize fugitive emissions. This approach would provide the owner or operator with the flexibility to determine how best to reduce HAP emissions to ensure levels remain below the fenceline concentration action level. The details of this proposed approach are set forth in more detail in the following discussions in this preamble section.

In light of the impracticality of directly monitoring many of these fugitive emission sources on a regular basis, which would help ensure these fugitive sources are properly functioning to the extent practical, we evaluated a fenceline monitoring program under CAA section 112(d)(6). In this section, we evaluate the developments in processes, practices and control technologies for measuring and controlling fugitive emissions from the petroleum refinery as a whole through fenceline monitoring techniques. Fenceline monitoring will identify a significant increase in emissions in a timely manner (*e.g.,* a large equipment leak or a significant tear in a storage vessel seal), which would allow corrective action measures to occur more rapidly than it would if a source relied solely on the traditional infrequent monitoring and inspection methods. Small increases in emissions are not likely to impact the fenceline concentration, so a fenceline monitoring approach will generally target larger emission sources that have the most impact on the ambient pollutant concentration near the refinery.

Historically, improved information through measurement data has often led to emission reductions. However, without a specific emission limitation, there may be no incentive for owners or operators to act on the additional information. Therefore, as part of the fenceline monitoring approach, we seek to develop a not-to-be exceeded annual fenceline concentration, above which refinery owners or operators would be required to implement corrective action to reduce their fenceline concentration. We sought to develop a maximum fenceline concentration action level that is consistent with the emissions projected from fugitive sources compliant with the provisions of the refinery MACT standards as modified by the additional controls proposed in this action (*e.g.,* additional fittings on storage vessels).

This section details our technology review to identify developments in processes, practices and technologies for measuring air toxics at the fenceline of a facility. Upon selection of a specific fenceline monitoring method, we provide our rationale for the specific details regarding the fenceline monitoring approach, including requirements for siting the monitors, procedures for adjusting for background interferences, selection of the fenceline action level, and requirements for corrective action.

Developments in monitoring technology and practices. The EPA reviewed the available literature and identified several different methods for measuring fugitive emissions around a petroleum refinery. These methods include: (1) Passive diffusive tube monitoring networks; (2) active monitoring station networks; (3) ultraviolet differential optical absorption spectroscopy (UV–DOAS) fenceline monitoring; (4) open-path Fourier transform infrared spectroscopy (FTIR); (5) DIAL monitoring; and (6) solar occultation flux monitoring. We considered these monitoring methods as developments in practices under CAA section 112(d)(6) for purposes of all fugitive emission sources at petroleum refineries. Each of these methods has its own strengths and weaknesses, which are discussed in the following paragraphs.

Fenceline passive diffusive tube monitoring networks employ a series of diffusive tube samplers at set intervals along the fenceline to measure a time-integrated ambient air concentration at each sampling location. A diffusive tube sampler consists of a small tube filled with an adsorbent, selected based on the pollutant(s) of interest, and capped with a specially designed cover with small holes that allow ambient air to diffuse into the tube at a small, fixed rate. Diffusive tube samplers have been demonstrated to be a cost-effective, accurate technique for measuring ambient concentrations of pollutants resulting from fugitive emissions in a number of studies.[29] [30] In addition,

[29] McKay, J., M. Molyneux, G. Pizzella, V. Radojcic. *Environmental Levels of Benzene at the*

diffusive samplers are used in the European Union to monitor and maintain air quality, as described in European Union directives 2008/50/EC and Measurement Standard EN 14662–4:2005 for benzene. The International Organization for Standardization developed a standard method for diffusive sampling (ISO/FDIS 16017–2).

In 2009, the EPA conducted a year-long fenceline monitoring pilot project at Flint Hills West Refinery in Corpus Christi, Texas, to evaluate the viability and performance of passive diffusive sampling technology. Overall, we found the technology to be capable of providing cost effective, high spatial-density long-term monitoring. This approach was found to be relatively robust and implementable by modestly trained personnel and provided useful information on overall concentration levels and source identification using simple upwind and downwind comparisons.[31] Combined with on-site meteorological measurements, 2-week time-integrated passive monitoring has been shown to provide useful facility emission diagnostics.

There are several drawbacks of time-integrated sampling, including the lack of immediate feedback on the acquired data and the loss of short-term temporal information. Additionally, time-integrated monitoring usually requires the collected sample to be transported to another location for analysis, leading to possible sample integrity problems (*e.g.,* sample deterioration, loss of analytes, and contamination from the surrounding environment). However, time-integrated monitoring systems are generally lower-cost and require less labor than time-resolved monitoring systems. Furthermore, while passive diffusive tube monitoring employs time-integrated sampling, these time-integrated samples still represent much shorter time intervals (2 weeks) than many of the current source-specific monitoring and inspection requirements (annually or less frequently). Consequently, passive diffusive tube monitoring still allows earlier detection of significant fugitive emissions than conventional source-specific monitoring.

Active monitoring station networks are similar to passive diffusive tube monitoring networks in that a series of discrete sampling sites are established; however, each sampling location uses a pump to actively draw ambient air at a known rate through an adsorption tube. Because of the higher sampling rate, adsorption tubes can be analyzed on a daily basis, providing additional time resolution compared to diffusive tube sampling systems. Alternatively, the active sampling system can directly feed an analyzer for even more time resolution. However, this direct analysis of ambient air generally has higher detection limits than when the organic vapors are collected and concentrated on an adsorption matrix prior to analysis. Active monitoring stations have been used for a variety of pollutants in a variety of settings and the methods are well-established. However, compared to the passive diffusive tube monitoring stations, the sampling system is more expensive, more labor-intensive, and generally requires highly-trained staff to operate.

UV–DOAS fenceline monitoring is an ''open-path'' technology. An electromagnetic energy source is used to emit a beam of electromagnetic energy (ultraviolet radiation) into the air towards a detection system some distance from the energy source (typically 100 to 500 meters). The electromagnetic energy beam interacts with components in the air in the open path between the energy source and the detector. The detector measures the disruptions in the energy beam to determine an average pollutant concentration across the open path length. Because the UV–DOAS system can monitor integrated concentrations over a fairly long path-length, fewer monitoring ''stations'' (energy source/detector systems) would be needed to measure the ambient concentration around an entire refinery. However, each UV–DOAS monitoring system is more expensive than an active or passive monitoring station and generally requires significant instrumentation shelter to protect the energy source and analyzer when used for long-term (ongoing) measurements. Advantages of UV–DOAS systems include providing real-time measurement data with detection limits in the low parts per billion range for certain compounds. Fog or other visibility issues (*e.g.,* dust storm, high pollen, wildfire smoke) will interfere with the measurements. UV–DOAS systems have been used for fenceline monitoring at several U.S. petroleum refineries and petrochemical plants. UV–DOAS monitoring systems are specifically included as one of the measurement techniques suitable under EPA's Other Test Method 10 (OTM–10).[32]

Open-path FTIR is similar to UV–DOAS monitoring except that an infrared light source and detector system are used. Like the UV–DOAS monitoring approach, the open-path FTIR monitoring system will measure the average pollutant concentration across the open path length between the infrared source and detector. Path lengths and equipment costs for an open-path FTIR system are similar to those for a UV–DOAS system, and the open-path FTIR system provides real-time measurement data. The open-path FTIR system has spectral interferences with water vapor, CO and CO_2, which can impact the lower detection limit for organic vapors. Open-path FTIR fenceline monitoring has also been used to measure ambient air concentrations around several petroleum refineries and petrochemical plants. Open-path FTIR is specifically included as a measurement technique in EPA's OTM–10. Although open-path FTIR can be used to measure a larger number of compounds than UV–DOAS, the detection limit of open-path FTIR for benzene is higher than for UV–DOAS, as noted in OTM–10. In other words, open-path FTIR is not as sensitive to benzene levels as is UV–DOAS. As benzene is an important pollutant from fugitive sources at petroleum refineries and can often be used as a surrogate for other organic HAP emissions, this high detection limit for benzene is a significant disadvantage. Thus, for the purposes of measuring organic HAP from fugitive sources at the fenceline of a petroleum refinery, a UV–DOAS monitoring system is expected to be more sensitive than an open-path FTIR system. As the cost and operation of open-path FTIR and UV–DOAS systems are very comparable, the benzene detection limit issue is a significant differentiator between these two methods when considering fenceline monitoring to measure fugitives around a petroleum refinery.

DIAL monitoring systems employ a pulsed laser beam across the measurement path. Small portions of the light are backscattered due to particles and aerosols in the measurement path. This backscattered light is collected through a telescope system adjacent to the laser and measured via a sensitive light detector. The timing of the received light provides a measure of the distance of

Boundaries of Three European Refineries, prepared by the CONCAWE Air Quality Management Group's Special Task Force on Benzene Monitoring at Refinery Fenceline (AQ/STF–45), Brussels, June 1999.

[30] Thoma, E.D., M.C. Miller, K.C. Chung, N.L. Parsons, B.C. Shine. 2011. *Facility Fenceline Monitoring using Passive Sampling,* J. Air & Waste Manage Assoc. 61: 834–842.

[31] Thoma, et al., 2011.

[32] ''Optical Remote Sensing for Emission Characterization from Non-Point Sources.'' Final ORS Protocol, June 14, 2006. Available at: *http://www.epa.gov/ttn/emc/prelim/otm10.pdf.*

the emission plume. Two different wavelengths of light are pulsed in quick succession: one wavelength that is absorbed strongly by the pollutant of interest and one that is not absorbed. The difference in the returned signal strength between these two light pulses provides a measure of the concentration of the pollutant. Thus, a unique advantage of the DIAL monitoring system is that it can provide spatially resolved pollutant concentrations in two dimensions. Measurements can be made in a relatively short period of time, so the method also provides good time resolution.

The DIAL monitoring system has been used in a variety of studies to measure emissions from petroleum refinery and petrochemical sources. It is typically used for specific, shorter-term studies (one to several weeks in duration). The equipment is expensive, has limited availability in the U.S., and requires highly trained professionals to operate. Although DIAL monitoring is included as an appropriate method for EPA's OTM–10, there are no known long-term applications of this technology for the purpose of fenceline monitoring. Given the limited availability of the equipment and qualified personnel to operate the equipment, we do not consider DIAL monitoring to be technically feasible for the purposes of ongoing, long-term fenceline monitoring.

The last fenceline monitoring method evaluated was solar occultation flux. Solar occultation flux uses the sun as the light source and uses an FTIR or UV detector to measure the average pollutant concentration across the measurement path. In this case, the measurement path is vertical. In order to measure the concentrations around an industrial source, the measurement device is installed in a specially equipped van, which is slowly driven along the perimeter of the facility. Measurement signal strength and a global positioning system (GPS) enables determination of pollutant concentrations along the perimeter of the site. This method provides more spatial resolution of the emissions than the UV–DOAS or open-path FTIR methods and is less expensive than a DIAL system. It has the advantage that only one monitoring system is needed per facility, assuming a mobile device is used. Disadvantages of this method include the need of full-time personnel to drive the equipment around the perimeter of the facility (or the need to buy a detector for each measurement location around the perimeter of the facility, if set locations are used), potential accessibility issues for some fenceline locations (*e.g.,* no road near the fenceline), and the measurement method cannot be used at night or during cloudy periods. It would be possible to purchase numerous detection devices and establish fixed monitoring stations similar to the passive or active monitoring approaches described earlier, but this would be very expensive. Furthermore, any application of solar occultation flux is dependent on the sun, so this approach would mean significant periods each calendar day when the monitoring system would not be able to provide data. Based on our evaluation of this technology, we determined that this method is not a reasonable approach for monitoring fenceline concentrations of pollutants around a petroleum refinery on a long-term, ongoing basis. We are soliciting comment on the application of alternative monitoring techniques previously discussed for purposes of fenceline monitoring at refineries.

Costs associated with fenceline monitoring alternatives. Based on our review of available monitoring methods, we determined that the following monitoring methods were technically feasible and appropriate for monitoring organic HAP from fugitive emission sources at the fenceline of a petroleum refinery on a long-term basis: (1) Passive diffusive tube monitoring networks; (2) active monitoring station networks; (3) UV–DOAS fenceline monitoring; and (4) open-path FTIR. While DIAL monitoring and solar occultation flux monitoring can be used for short-term studies, we determined that these methods were not appropriate for continuous monitoring at petroleum refineries. This section evaluates the costs of these technically feasible monitoring methods. As noted previously, the cost identified for the open-path monitoring methods (UV–DOAS and FTIR) are very similar. Therefore, we developed costs for only the UV–DOAS system because this method provides lower detection limits for pollutants of interest (specifically, benzene).

Costs for the fenceline monitoring methods are dependent on the sampling frequency (for passive and active monitoring locations) and the number of monitoring locations needed based on the size and geometry of the facility. For the open-path methods, we estimated that four monitoring systems (along the east, west, north and south fencelines) would be needed, regardless of the size of the refinery. Some fencelines at larger refineries may be too long for a single open path length, but we did not vary the number of detectors needed for the open-path systems based on refinery size in order to provide a reasonable lower-cost estimate for the open-path monitoring option. For small petroleum refineries (less than 750 acres), we estimated 12 passive or active monitoring stations would be sufficient. For medium-sized refineries (750 to 1,500 acres), we estimated 18 monitoring stations would be required; for large refineries (greater than 1,500 acres), we estimated that 24 monitoring stations would be needed. For the passive diffusive tube monitoring we assumed a 2-week sampling interval; for active monitoring stations, we assumed a daily sampling frequency.

We estimated the first year installation and equipment costs for the passive tube monitoring system could cost up to $100,000 for larger refineries (*i.e.,* 24 sampling locations). Annualized costs for ongoing monitoring are projected to be approximately $40,000 per year, assuming the ongoing sample analyses are performed in-house. Capital costs for active sampling systems were estimated to be approximately twice that of the passive system for the larger refinery. Ongoing costs were more than 10 times higher, however, due to the daily sampling frequency. Equipment costs for a single UV–DOAS system were estimated to be about $100,000, so a complete fenceline monitoring system (four systems plus shelters) was estimated to cost more than $500,000. A refinery using this technology for two fenceline locations estimated the annualized cost of calibrating and maintaining these systems approaches $1-million per year. (See *Fenceline Monitoring Technical Support Document,* in Docket ID Number EPA–HQ–OAR–2010–0682).

Table 9 provides the nationwide costs of the monitoring approaches as applied to all U.S. petroleum refineries.

TABLE 9—NATIONWIDE COST IMPACTS OF FENCELINE MONITORING OPTIONS AT PETROLEUM REFINERIES

Monitoring option	Monitoring option description	Capital cost (million $)	Annual operating costs (million $/yr)	Total annualized costs (million $/yr)
1	Passive diffusive tube monitoring network	12.2	3.83	5.58
2	Active sampling monitoring network	20.6	30.2	33.1
3	Open-path monitoring (UV–DOAS, FTIR)	71.0	35.5	45.6

The primary goal of a fenceline monitoring network is to ensure that owners and operators properly monitor and manage fugitive HAP emissions. As explained further in this preamble section, we are proposing a concentration action level that was derived by modeling fenceline benzene concentrations (as a surrogate for HAP) at each facility after full compliance with the refinery MACT standards, as amended by this proposed action. As such, we are proposing a fenceline benzene concentration that all facilities in the category can meet, according to the emissions inventories reported in response to the 2011 Refinery ICR. Therefore, we do not project a HAP emission reduction that the fenceline monitoring network will achieve. However, if an owner or operator has underestimated the fugitive emissions from one or more sources, or if a leak develops or a tank seal or fitting fails, a fenceline monitoring system would provide for identification of such leaks much earlier than current monitoring requirements and, where emissions are beyond those projected from implementation of the MACT standards, would help ensure that such emissions are quickly addressed. We note that any costs for a fugitive monitoring system would be offset, to some extent, by product recovery since addressing these leaks more quickly than would otherwise occur based on the more infrequent monitoring required would reduce product losses.

Based on the low cost and relative benefits of passive monitoring, which include the ability to generate time-integrated concentration measurements at low detection limits, coupled with relative ease of deployment and analysis, the EPA is proposing to require refineries to deploy passive time-integrated samplers at the fenceline. These samplers would monitor the level of fugitive emissions that reach the fenceline from all fugitive emission sources at the facility. The EPA is proposing to require fugitive emission reductions if fenceline concentrations exceed a specified concentration action level, as described further below. These proposed fenceline monitoring requirements complement the EPA's proposal to allow the use of the optical gas imaging camera as described in Appendix K of 40 CFR part 60 as an alternative work practice for measuring emissions from equipment leaks, in lieu of monitoring with EPA Method 21 of 40 CFR part 60, Appendix A–7 (see section IV.B.1.c of this preamble for further discussion). Both approaches utilize low-cost methods to help ensure that total fugitives from a facility are adequately controlled.

Because there is no current EPA test method for passive diffusive tube monitoring, as part of this action we are proposing specific monitor citing and sample collection requirements as EPA Method 325A of 40 CFR part 63, Appendix A, and specific methods for analyzing the sorbent tube samples as EPA Method 325B of 40 CFR part 63, Appendix A. We are proposing to establish an ambient concentration of benzene at the fenceline that would trigger required corrective action. A brief summary of the proposed fenceline sampling requirements and our rationale for selecting the corrective action concentration levels are provided below.

Siting, design and sampling requirements for fenceline monitors. The EPA is proposing that passive fenceline monitors collecting 2-week time-integrated samples be deployed to measure fenceline concentrations at refineries. We are proposing that refineries deploy passive samplers at 12 to 24 points circling the refinery perimeter. A primary requirement for a fenceline monitoring system is that it provides adequate spatial coverage for determination of representative pollutant concentrations at the boundary of the facility or operation. In an ideal scenario, fenceline monitors would be placed so that any fugitive plume originating within the facility would have a high probability of intersecting one or more monitors, regardless of wind direction. This proposed monitoring program would require that monitors be placed at 15 to 30 degree intervals along the perimeter of the refinery, depending on the size of the facility. For small refineries (less than 750 acres), monitors should be placed at 30 degree intervals, for a total of 12 locations; for facilities that are larger than 750 acres and less than 1,500 acres, monitors should be placed at 20 degree intervals, at 18 locations; and for facilities greater than 1,500 acres, monitors should be placed at 15 degree intervals, accounting for 24 locations. We have also established an alternative siting procedure where monitors can be placed every 2,000 feet along the fenceline of the refinery, which may be easier to implement, especially for irregularly-shaped facilities. In proposing these requirements for the number and location of required monitors, the EPA assumes that all portions of the facility are contiguous such that it is possible to define a single facility boundary or perimeter, although this perimeter may be irregular in shape. We request comment on how these monitoring requirements should be adapted for instances where one or more portions of the facility are not contiguous, and on the number and location of facilities for which special fenceline monitoring requirements to accommodate non-contiguous operations might apply.

We are proposing that the highest concentration of benzene, as an annual rolling average measured at any individual monitor and adjusted for background (see below), would be compared against the concentration action level in order to determine if there are significant excess emissions of fugitive emissions that need to be addressed. Existing sources would be required to deploy samplers no later than 3 years after the effective date of the final rule; new sources would be required to deploy samplers by the effective date of the final rule or startup, whichever is later. Because the proposed concentration action level is composed of 1 year's worth of data, we are proposing that refinery owners and operators would be required to demonstrate compliance with the concentration action level for the first time 1 year following the compliance date, and thereafter on a 1-year rolling annual average basis (*i.e.,* considering results from the most recent 26 consecutive 2-week sampling intervals and recalculating the average every 2 weeks).

Benzene as an appropriate target analyte. Passive diffusive tube monitors can be used to determine the ambient concentration of a large number of compounds. However, different sorbent materials are typically needed to collect compounds with significantly different properties. Rather than require multiple tubes per monitoring location and require a full analytical array of compounds to be determined, which would significantly increase the cost of the proposed fenceline monitoring program, we are proposing that the fenceline monitors be analyzed specifically for benzene. Refinery owners or operators may elect to do more detailed speciation of the emissions, which could help identify the process unit that may be contributing to a high fenceline concentration, but we are only establishing monitoring requirements and action level requirements for benzene. We consider benzene to be an excellent surrogate for organic HAP from fugitive sources for multiple reasons. First, benzene is ubiquitous at refineries, and is present in nearly all refinery process streams such that leaking components generally will leak benzene at some level (in addition to other compounds). Benzene is also present in crude oil and gasoline, so most storage tank emissions include benzene. As described previously in our discussion of wastewater treatment systems, benzene is also a very good surrogate for organic HAP emissions from wastewater and is already considered a surrogate for organic HAP emissions in the wastewater treatment system control requirements in Refinery MACT 1. Second, the primary releases of benzene occur at ground level as fugitive emissions from process equipment, storage vessels and wastewater collection and treatment systems, and the highest ambient benzene concentrations outside the facility will likely occur near the property boundary near ground level, so fugitive releases of benzene will be effectively detected at the ground-level monitoring sites. According to the emissions inventory we have relied on for this proposed action, 85 percent of benzene emissions from refineries result from ground-level fugitive emissions from equipment and wastewater collection and treatment (see the Component 2 database contained in Docket ID Number EPA–HQ–OAR–2010–0682). Finally, benzene is present in nearly all process streams. Therefore, the presence of benzene at the fenceline is also an indicator of other air toxics emitted from fugitive sources at refineries.

For the reasons discussed above, we believe that benzene is the most appropriate pollutant to monitor. We believe that other compounds, such as PAH or naphthalene, would be less suitable indicators of total fugitive HAP for a couple of reasons. First, they are prevalent in stack emissions as well as fugitive emissions, so there is more potential for fenceline monitors to pick up contributions from non-fugitive sources. In contrast, almost all benzene comes from fugitive sources, so monitoring for benzene increases our confidence that the concentration detected at the fenceline is from fugitives. Second, as compared to benzene, these other compounds are expected to be present at lower concentrations and, therefore, would be more difficult to measure accurately using fenceline monitoring. We request comments on the suitability of selecting benzene or other HAP, including PAH or naphthalene, as the indicator to be monitored by fenceline samplers. We also request comment on whether it would be appropriate to require multiple HAP to be monitored at the fenceline considering the capital and annual cost for additional monitors, and if so, which pollutants should be monitored.

Adjusting for background benzene concentrations. Under this proposed approach, absolute measurements along a facility fenceline cannot completely characterize which emissions are associated with the refinery and which are associated with other background sources. The EPA recognizes that sources outside the refinery boundaries may influence benzene levels monitored at the fenceline. Furthermore, background levels driven by local upwind sources are spatially variable. Both of these factors could result in inaccurate estimates of the actual contribution of fugitive emissions from the facility itself to the concentration measured at the fenceline. Many refineries and petrochemical industries are found side-by-side along waterways or transport corridors. With this spatial positioning, there is a possibility that the local upwind neighbors of a facility could cause different background levels on different sides of the facility. To account for background concentrations (*i.e.,* to remove the influence of benzene emissions from sources outside the refinery on monitored fenceline values), we are proposing to adjust monitored fenceline values to account for background concentrations as described below. We solicit comments on alternative approaches for making these adjustments for background benzene.

Fenceline-deployed passive samplers measure concentrations that originate from both the observed facility and from off-site sources. The relative contribution of the facility versus off-site source(s) to the measured concentration depends on the emission levels of the observed facility and off-site sources (including both near-field and remote sources), transporting wind direction and atmospheric dispersion. The ability to identify facility and off-site source contributions is reliant on the measurement scheme selected. The most basic (and lowest cost) approach involves different calculations using 2-week deployed samplers located only at the facility fenceline. Greater discrimination capability is found by adding passive samplers to specific areas of the facility, reducing the time duration of the passive samplers, and coupling measured meteorology information to the passive sampler analysis. Selective use of time-resolved monitoring or wind sector sampling approaches provides the highest source and background discrimination capability. The approach we are proposing seeks to remove off-site source contributions to the measured fenceline concentrations to the greatest extent possible using the most cost-effective measurement solutions.

The highest fenceline concentration (HFC) for each 2-week sampling period can be expressed as:

$$HFC = Maximum \times (MFC - OSC^{i})$$

Where:

HFC = highest fenceline concentration, corrected for background.

MFC_i = measured fenceline concentration for the sampling period at monitoring location i.

OSC_i = estimated off-site source contribution for the sampling period at monitoring location i.

The off-site source contribution (OSC) consists of two primary components: (1) A slowly varying, spatially uniform background (UB) concentration and, in some cases, (2) potential near-field interfering sources.

$$OSC_i = UB + NFS_i$$

Where:

UB = uniform background concentration.

NFS_i = near-field interfering source concentration contribution at monitoring location i.

In some deployment scenarios (such as spatially isolated facilities), the major off-site source component can be identified as background concentrations that are uniform across the facility fenceline and neighboring area. In this

scenario, a UB concentration level can be determined and subtracted from the measured fenceline concentrations for each sampling period. This can be accomplished through use of facility-measured or otherwise available, quality assured time-resolved (or wind sector-resolved) background monitoring data, or from placement of additional passive samplers at upwind locations away from the facility fenceline and other sources.

In other scenarios, such as where other industrial sources or a highway are located nearby, background concentrations are likely not uniform. These outside sources would influence some, but not perhaps not all, fenceline monitors and, therefore, the true ''background'' concentration would vary, depending where on the fenceline the measurement was taken. In this case, background is not uniform, and monitoring location-specific near-field interfering source (NFS) values would need to be determined.

Due to the difficulties associated with determining location-specific NFS values, we are proposing to approximate OSC by using the lowest measured concentration (LMC) at the facility fenceline for that period. In this case, the HFC for the monitoring period, corrected for background, would be calculated as:

$$HFC \approx \Delta C = HMC - LMC$$

Where:

ΔC = concentration difference between the highest and lowest measured concentrations for the sampling period.
HMC = highest measured fenceline concentration for the sampling period.
LMC = lowest measured fenceline concentration for the sampling period.

This alternative is directly applicable for all refinery locations and requires no additional, off-site, upwind monitors, the placement of which is impossible to prescribe *a priori*. Use of LMC provides a reasonable proxy for OSC in most cases, but can over- or underestimate OSC in some cases. In locations where there are few upwind source contributions and where wind direction is relatively consistent, upwind passive samples on the fenceline can provide a realistic approximation of the actual off-site background levels. As the meteorology becomes more complicated (*e.g.,* mixed wind directions, higher percentage of calm winds), the LMC will reflect a progressively larger amount of emissions from the facility itself, so differential calculations may underestimate the true HFC for some monitoring periods (by inadvertently allowing some facility emissions to be subtracted as part of ''background''). On the other hand, if a near-field source impacts the highest measured concentration monitoring location significantly, but contributes little to the monitoring location with the LMC, the LMC differential calculation (*i.e.,* ΔC) could lead to an artificially elevated assessment of the highest fenceline concentration, corrected for background.

Based on our examination of previous fenceline monitoring results, we expect that the use of the LMC differential will provide an accurate method by which to determine HFC. Therefore, we are not proposing to limit the use of the LMC differential calculation in cases where there are no near-field sources and where mixed wind direction (or calm wind) is common. In these special cases, use of the UB concentration alone (no NFS term) may be more accurate than using LMC. We are seeking comment on how to identify conditions under which the LMC differential may underestimate the highest fenceline concentration, corrected for background, and the need to require facilities to determine and use UB rather than LMC in these cases.

We also recognize that under different site-specific conditions, the NFS contribution may affect certain fenceline monitoring stations more than others, causing the LMC differential calculation to overestimate the facility's contribution to the highest fenceline concentration. Therefore, we are also proposing to allow owners or operators of petroleum refineries to develop site-specific monitoring plans to determine UB and NFS_i.

If standard 2-week passive fenceline data and site analysis indicate potential near-field off-site source interferences at a section of the refinery, the proposal allows the owner or operator to conduct additional sampling strategies to determine a local background (OSC term) for use in the HFC calculation. The owner or operator would be required to report the basis for this correction, including analyses used to identify the sources and contribution of benzene concentration to the passive sampler concentration, within 45 days of the date the owner or operator first measures an exceedance of the concentration action level.

We envision that facilities would implement these additional strategies to refine fenceline concentration estimates only if appropriate given site-specific characteristics and only if HFC determined by the LMC approach is likely to exceed the concentration action level (see discussion below regarding this action level). Facilities with HFC below the concentration action level based on the simple LMC differential calculation would not be required to make any further demonstration of the influence of background sources on concentrations measured at the fenceline. For facilities where additional background adjustment is appropriate, optional strategies could include deployment of additional passive samplers at distances from the fenceline (toward and away from suspected NFS) and reducing the time intervals of passive deployments to increase time resolution and wind direction-comparison capability. In complex cases, such as two refineries sharing a common fenceline, wind-sector sampling or various forms of time-resolved monitoring may be required to ascertain the fenceline concentrations.

We are proposing that owners or operators of petroleum refineries electing to determine monitoring location-specific NFS concentrations must prepare and submit a site-specific monitoring plan. The monitoring plan is required to identify specific near-field sources, identify the location and type of monitors used to determine UB and NFS concentrations, identify the monitoring location(s) for which the NFS concentrations would apply, and delineate the calculations to be used to determine monitoring location specific NFS concentrations (for those monitoring locations impacted by the near-field source). We are proposing that the site-specific monitoring plan must be submitted to the Administrator for approval and receive approval prior to its use for determining HFC values.

The EPA requests comment on the most appropriate approach(es) for adjusting measured fenceline concentrations for background contributions, including (in complex cases) where meteorology is highly variable or where one or more near-field off-site sources affect the measured fenceline concentration (MFC) at a refinery. We are also seeking comment on the adequacy of the proposed requirements for developing and approving site-specific monitoring plans.

Concentration action level. As mentioned above, the EPA is proposing to require refineries to take corrective action to reduce fugitive emissions if monitored fenceline concentrations exceed a specific concentration action level on a rolling annual average basis (recalculated every two weeks). We selected this proposed fenceline action level by modeling fenceline benzene concentrations using the emissions inventories reported in response to the 2011 Refinery ICR, assuming that those reported emissions represented full compliance with all refinery MACT requirements, adjusted for additional control requirements we are proposing

in today's action. Thus, if the reported inventories are accurate, all facilities should be able to meet the fenceline concentration action level. We estimated the long-term ambient post-control benzene concentrations at each petroleum refinery using the post-control emission inventory and EPA's American Meteorological Society/EPA Regulatory Model dispersion modeling system (AERMOD). Concentrations were estimated by the model at a set of polar grid receptors centered on each facility, as well as surrounding census block centroid receptors extending from the facility outward to 50 km. For purposes of this modeling analysis, we assumed that the nearest off-site polar grid receptor was the best representation of each facility's fenceline concentration in the post-control case, unless there was a census block centroid nearer to the fenceline than the nearest off-site polar grid receptor or an actual receptor was identified from review of the site map. In those instances, we estimated the fenceline concentration as the concentration at the census block centroid. Only receptors (either the polar or census block) that were estimated to be outside the facility fenceline were considered in determining the maximum benzene level for each facility. We note that this analysis does not correlate to any particular metric related to risk. The maximum post-control benzene concentration modeled at the fenceline for any facility is 9 micrograms per cubic meter (μg/m^3) (annual average). (For further details of the analysis, see memo entitled *Fenceline Ambient Benzene Concentrations Surrounding Petroleum Refineries* in Docket ID Number EPA–HQ–OAR–2010–0682.)

The facility inventories generally project emissions with the required fugitive controls working as designed (*e.g.,* no tears in seals for storage vessel floating roofs and water in all water drain seals). If facility inventories are correct, annual average benzene concentrations would not exceed 9 μg/m^3 at the fenceline of any facility. Because the modeling approach considers only the emissions from the refinery, with no contribution from background or near-field sources, this concentration is comparable to the highest modeled fenceline concentration after correcting for background concentrations, as described previously. The EPA is proposing to set the standard at this concentration action level. We also note that this modeling effort evaluated the annual average benzene concentration at the fenceline, so that this action level applies to the annual average fenceline concentration measured at the facility.

The EPA recognizes that, because it is difficult to directly measure emissions from fugitive sources, there is significant uncertainty in current emissions inventories for fugitives. Thus, there is the potential for benzene concentrations monitored at the fenceline to exceed modeled concentrations. However, given the absence of fenceline monitors at most facilities, there is very limited information available at present about fenceline concentrations and the extent to which they may exceed concentrations modeled from inventories. In the absence of additional data regarding the concentration of fugitive emissions of benzene at the fenceline, the EPA believes it is reasonable to rely on the maximum modeled fenceline value as the concentration action level. We are soliciting comment on alternative concentration action levels and other approaches for establishing the concentration action level.

Due to differences in short-term meteorological conditions, short-term (*i.e.,* two-week average) concentrations at the fenceline can vary greatly. Given the high variability in short-term fenceline concentrations and the difficulties and uncertainties associated with estimating a maximum 2-week fenceline concentration given a limited number of years of meteorological data used in the modeling exercise, we determined that it would be inappropriate and ineffective to propose a short-term concentration action level that would trigger corrective action based on a single 2-week sampling event.

One objective for this monitoring program is to identify fugitive emission releases more quickly, so that corrective action can be implemented in a more timely fashion than might otherwise occur without the fenceline monitoring requirement. We believe the proposed fenceline monitoring approach and a rolling annual average concentration action limit (*i.e.,* using results from the most recent 26 consecutive 2-week samples and recalculating the average every 2 weeks) will achieve this objective. The proposed fenceline monitoring will provide the refinery owner or operator with fenceline concentration information once every 2 weeks. Therefore, the refinery owner or operator will be able to timely identify emissions leading to elevated fenceline concentrations. We anticipate that the refinery owners or operators will elect to identify and correct these sources early, in efforts to avoid exceeding the annual benzene concentration action level.

An ''exceedance'' of the benzene concentration action level would occur when the rolling annual average highest fenceline concentration, corrected for background (determined as described previously), exceeds 9 μg/m^3. Upon exceeding the concentration action level, we propose that refinery owners or operators would be required to conduct analyses to identify sources contributing to fenceline concentrations and take corrective action to reduce fugitive emissions to ensure fenceline benzene concentrations remain at or below 9 μg/m^3 (rolling annual average).

Corrective action requirements. As described previously, the EPA is proposing that the owner or operator analyze the samples and compare the rolling annual average fenceline concentration, corrected for background, to the concentration action level. This section summarizes the corrective action requirements in this proposed rule. First, we are proposing that the calculation of the rolling annual average fenceline concentration must be completed within 30 days after the completion of each sampling episode. If the rolling annual average fenceline benzene concentration, corrected for background, exceeds the proposed concentration action level (*i.e.,* 9 μg/m^3), the facility must, within 5 days of comparing the rolling annual average concentration to the concentration action level, initiate a root cause analysis to determine the primary cause, and any other contributing cause(s), of the exceedance. The facility must complete the root cause analysis and implement corrective action within 45 days of initiating the root cause analysis. We are not proposing specific controls or corrections that would be required when the concentration action level is exceeded because the cause of an exceedance could vary greatly from facility to facility and episode to episode, since many different sources emit fugitive emissions. Rather, we are proposing to allow facilities to determine, based on their own analysis of their operations, the action that must be taken to reduce air concentrations at the fenceline to levels at or below the concentration action level, representing full compliance with all refinery MACT requirements, adjusted for additional control requirements we are proposing in today's action.

If, upon completion of the corrective action described above, the owner or operator exceeds the action level for the next two-week sampling episode following the completion of a first set of corrective actions, the owner or operator

would be required to develop and submit to EPA a corrective action plan that would describe the corrective actions completed to date. This plan would include a schedule for implementation of emission reduction measures that the owner or operator can demonstrate is as soon as practical. This plan would be submitted to the Administrator for approval within 30 days of an exceedance occurring during the next two-week sampling episode following the completion of the initial round of corrective action. The EPA would evaluate this plan based on the ambient concentrations measured, the sources identified as contributing to the high fenceline concentration, the potential emission reduction measures identified, and the emission reduction measures proposed to be implemented in light of the costs of the options considered and the reductions needed to reduce the ambient concentration below the action level threshold. To minimize burden on the state implementing agencies and provide additional resources for identifying potential emission sources, we are proposing not to delegate approval of this plan. The refinery owner or operator is not deemed out of compliance with the proposed concentration action level, provided that the appropriate corrective action measures are taken according to the time-frame detailed in an approved corrective action plan.

The EPA requests comment on whether it is appropriate to establish a standard time frame for compliance with actions listed in a corrective action plan. We also request comment on whether the approval of the corrective action plan should be delegated to state, local and tribal governments.

The EPA's post-control dispersion modeling (described in section III.A of this preamble), which relies on reported emissions inventories from the 2011 Refinery ICR, adjusted to reflect compliance with the existing refinery MACT standards as modified by the additional controls proposed in this rulemaking, indicates that fugitive emissions at all refineries are low enough to ensure that fenceline concentrations of benzene do not exceed the proposed concentration action level. Assuming the reported inventories and associated modeling are accurate, we expect that few, if any, facilities will need to engage in required corrective action. We do, however, expect that facilities may identify ''poor-performing'' sources (*e.g.,* unusual leaks) from the fenceline monitoring data and, based on this additional information, will take action to reduce HAP emissions before they would have otherwise been aware of the issue through existing inspection and enforcement measures.

By selecting a fenceline monitoring approach and by selecting benzene as the surrogate for organic HAP emissions, we believe that the proposed monitoring approach will effectively target refinery MACT-regulated fugitive emission sources. However, there may be instances where the fenceline concentration is impacted by a low-level miscellaneous process vent, heat exchange system or other similar source. As these sources are regulated under Refinery MACT 1 and the emissions from these sources were included in our post-control modeling file (from which the 9 $\mu g/m^3$ fenceline concentration action level was developed), sources would not be able to avoid taking corrective action by claiming the exceedance of the fenceline concentration was from one of these emission points rather than from fugitive emission sources.

There may be instances in which the high fenceline concentration is impacted by a non-refinery emission source. The most likely instance of this would be leaks from HON equipment or HON storage vessels co-located at the refinery. However, we consider the fenceline monitoring requirement to be specific to refinery emission sources. Therefore, we are proposing to allow refinery owners or operators to develop site-specific monitoring plans to determine the impact of these non-Refinery emission sources on the ambient benzene concentration measured at the fenceline. This monitoring plan would be identical to those used by refinery owners or operators that elect to determine monitoring location-specific NFS values for nearby off-site sources. In this case, however, the NFS is actually within the refinery fenceline. Upon approval and implementation of the monitoring plan, the refinery owner or operator would determine the highest fenceline concentration corrected for background; the background correction in this case includes a correction for the co-located non-Refinery emission source(s).

The EPA requests comment on whether the corrective action requirements should be limited to exceedances of the fenceline concentration solely from refinery emission sources and whether a refinery owner or operator should be allowed to exceed the annual average fenceline concentration action level if they can demonstrate the exceedance of the action level is due to a non-refinery emissions source. We also request comment on the requirements proposed for refinery owners or operators to demonstrate that the exceedance is caused by a non-refinery emissions source. Specifically, we request comment on whether the ''near-field source'' correction is appropriate for on-site sources and whether there are other methods by which refinery owners or operators with co-located, non-refinery emission sources can demonstrate that their benzene concentrations do not exceed the proposed fenceline concentration action level.

Additional requirements of the fenceline monitoring program. We are proposing that fenceline data at each monitor location be reported electronically for each semiannual period's worth of sampling periods (*i.e.,* 13 to 14 2-week sampling periods per semiannual period). These data would be reported within 45 days of the end of each semiannual period, and will be made available to the public through the EPA's electronic reporting and data retrieval portal, in keeping with the EPA's efforts to streamline and reduce reporting burden and to move away from hard copy submittals of data where feasible.

We are proposing to require the reporting of raw fenceline monitoring data, and not just the HFC, on a semiannual basis; considering the fact that the fenceline monitoring standard is a new approach for fugitive emissions control, and it involves the use of new methods, both analytical and siting methods, this information is necessary for the EPA to evaluate whether this standard has been implemented correctly. Further, the information provided by the raw data, such as the need for additional or less monitoring sites, the range of measured concentrations, the influence of background sources, and the ability to collect and compare data from all refineries, will inform us of further improvements we can make to the fenceline standard, monitoring and analytical methods, approaches for estimating refinery fugitive emissions, and guidance that may be helpful to improve implementation of the fenceline monitoring approach. We seek comment on suggestions for other ways we can monitor and improve the fenceline monitoring requirement.

We are proposing that facilities be required to conduct fenceline monitoring on a continuous basis, in accordance with the specific methods described above, even if benzene concentrations, as measured at the fenceline, routinely are substantially lower than the concentration action level. In light of the low annual

monitoring and reporting costs associated with the fenceline monitors (as described in the next section), and the importance of the fenceline monitors as a means of ensuring the control of fugitives achieves the expected emission levels, we believe it is appropriate to require collection of fenceline monitoring data on a continuous basis. However, the EPA recognizes that fugitive benzene emissions from some facilities may be so low as to make it improbable that exceedances of the concentration action level would ever occur.

In the interest of reducing the cost burden on facilities to comply with this rule, the EPA solicits comment on approaches for reducing or eliminating fenceline monitoring requirements for facilities that consistently measure fenceline concentrations below the concentration action level, and the measurement level that should be used to provide such relief. Such an approach would be consistent with graduated requirements for valve leak monitoring in Refinery MACT 1 and other equipment leak standards, where the frequency of required monitoring varies depending on the percent of leaking valves identified during the previous monitoring period (see, for example, 40 CFR 63.648(c) and 40 CFR 63.168(d)). The EPA requests comment on the minimum time period facilities should be required to conduct fenceline monitoring; the level of performance, in terms of monitored fenceline concentrations, that would enable a facility to discontinue use of fenceline monitors or reduce the frequency of data collection and reporting; and any adjustments to the optical gas imaging camera requirements that would be necessary in conjunction with such changes to the fenceline monitoring requirements.

i. Delayed Coking Units

As noted in section IV.A of this preamble, we are soliciting comments on the need to establish MACT standards for DCU under CAA section 112(d)(2) and (3). Even if we were to assume that there is already an applicable MACT standard for DCU, a technology review of this emission source, as prescribed under CAA section 112(d)(6), would lead us to propose a depressurization limit of 2 psig because of technology advancements since the MACT standards were originally issued and because it is cost effective. Industry representatives have pointed out that Refinery NSPS Ja requires DCU at new and modified sources to depressure to 5 psig, and they have indicated that EPA should not require a lower depressurization limit under a CAA section 112(d)(6) technology review. Further, industry representatives also provided summary-level information (available in Docket ID Number EPA–HQ–OAR–2010–0682 as correspondence from API entitled *Coker Vent Potential Release Limit Preliminary Emission, Cost and Cost Effectiveness Estimates*) on costs to depressure to 5 psig versus 2 psig. While the cost information does not show large differences for any particular facility to depressure at 5 psig versus 2 psig, the information does show a large range in potential costs between refineries. At this time, we do not have the detailed, refinery-specific cost breakdowns to compare against our cost assumptions, which were derived from data obtained for a facility that did install the necessary equipment to meet a 2 psig limit. We also do not have detailed information on the design and operation of the DCU in industry's cost study to evaluate whether there are any differences that would warrant subcategories. We solicit information on designs, operational factors, detailed costs and emissions data for DCU, and we specifically solicit comments on what should be the appropriate DCU depressurization limit if we were to adopt such a requirement pursuant to CAA section 112(d)(6) rather than pursuant to CAA section 112(d)(2) and (3).

2. Refinery MACT 2—40 CFR Part 63, Subpart UUU

The Refinery MACT 2 source category regulates HAP emissions from FCCU, CRU and SRU process vents. Criteria pollutant emissions from FCCU and SRU are regulated under 40 CFR part 60, subparts J and Ja (Refinery NSPS J and Refinery NSPS Ja, respectively). We conducted a technology review of Refinery NSPS J emission limits from 2005 to 2008 and promulgated new standards for FCCU and SRU (among other sources) in Refinery NSPS Ja on June 24, 2008 (73 FR 35838). Our current technology review of Refinery MACT 2 relies upon, but is not limited to, consideration of this recent technology review of Refinery NSPS J for FCCU and SRU.

a. FCCU Process Vent

The FCCU has one large atmospheric vent, the coke burn-off exhaust stream for the unit's catalyst regenerator. HAP emissions from this FCCU process vent include metal HAP associated with entrained catalyst particles and organic HAP, mostly by-products of incomplete combustion from the coke burn-off process. As the control technologies associated with each of these classes of pollutants are very different, the controls associated with each of these classes of pollutants are considered separately.

Metal HAP emission controls. The current Refinery MACT 2 includes several different compliance options, some based on PM as a surrogate for total metal HAP and some based on nickel (Ni) as a surrogate for total metal HAP. Refinery NSPS J was the basis of the PM emission limits and the metal HAP MACT floor in Refinery MACT 2. Refinery NSPS J limits PM from FCCU catalyst regeneration vents to 1.0 gram particulate matter per kilogram (g PM/kg) of coke burn-off, with an additional incremental PM allowance for liquid or solid fuel burned in an incinerator, waste heat boiler, or similar device. Refinery MACT 2 states that FCCU subject to Refinery NSPS J PM emission limits are required to demonstrate compliance with Refinery NSPS J PM emission limits as specified in Refinery NSPS J. As provided in Refinery NSPS J, ongoing compliance with the PM emission limits is determined by compliance with a 30-percent opacity limit, except for one 6-minute average per hour not to exceed 60-percent opacity. FCCU not subject to Refinery NSPS J may elect to comply with the FCCU PM provisions in Refinery NSPS J. Alternatively, they may comply with a 1.0 g PM/kg of coke burn-off emission limit in Refinery MACT 2 (with no provision for an additional incremental PM allowance for liquid or solid fuel burned in an incinerator, waste heat boiler, or similar device). Compliance with this limit in Refinery MACT 2 is demonstrated by either a 1-hour average site-specific opacity limit using a continuous opacity monitoring system (COMS) or APCD-specific daily average operating limits using CPMS.

Refinery MACT 2 also includes two emission limit alternatives that use Ni, rather than PM, as the surrogate for metal HAP. The first of these Ni alternatives is a mass emission limit of 13 grams Ni per hour; the second nickel alternative is an emission limit of 1.0 milligrams Ni per kilogram of coke burn-off. Compliance with the Ni emission limits in Refinery MACT 2 is demonstrated by either a daily average site-specific Ni operating limit (using a COMS and weekly determination of Ni concentration on equilibrium FCCU catalyst), or APCD-specific daily average operating limits using CPMS and monthly average Ni concentration operating limit for the equilibrium FCCU catalyst.

Under Refinery MACT 2, an initial performance demonstration (source test) is required to show that FCCU is

compliant with the emission limits selected by the refinery owner or operator. No additional performance test is required for facilities already complying with Refinery NSPS J. The performance test is a one-time requirement; additional performance tests are only required if the owner or operator elects to establish new operating limits, or to modify the FCCU or control system in such a manner that could affect the control system's performance.

Under the review for Refinery NSPS J, we conducted a literature review as well as a review of the EPA's refinery settlements and state and local regulations affecting refineries to identify developments in practices, processes and control technologies to reduce PM emissions from refinery sources (see *Summary of Data Gathering Efforts: Emission Control and Emission Reduction Activities,* August 19, 2005, and *Review of PM Emission Sources at Refineries,* December 20, 2005, Docket Item Number EPA–HQ–OAR–2007–0011–0042). At that time, we identified regulations for PM from FCCU that were more stringent than the Refinery NSPS J requirements for PM, and we promulgated more stringent PM limits in Refinery NSPS Ja. Refinery NSPS Ja limits PM from FCCU catalyst regeneration vents to 1.0 g PM/kg of coke burn-off for modified or reconstructed FCCU, with no incremental allowance for PM-associated liquid or solid fuels burned in a post-combustion device. Furthermore, an emission limit of 0.5 g PM/kg of coke burn-off was established for FCCU constructed after May 14, 2007.

In addition, the Refinery NSPS J review identified improvements in APCD monitoring practices, which were included in the Refinery NSPS Ja standards. Refinery NSPS J includes a 30-percent opacity limit as the only ongoing monitoring requirements for PM from the FCCU. This 30-percent opacity limit has shown to be lenient and high in comparison to recent federal rules that have included more stringent opacity limits (*e.g.,* 40 CFR part 60, subpart Db with 20-percent opacity), and recent state and local agency rules that omit opacity limits altogether in favor of operating limits for the emission control systems. Based on the Refinery NSPS J review, Refinery NSPS Ja does not include an opacity limit, but includes updated and more appropriate monitoring approaches, such as requiring bag leak detectors (BLD) for fabric filter control systems, and requiring CPMS for electrostatic precipitators (ESP) and wet scrubbers. Additionally, Refinery NSPS Ja includes an option to measure PM emissions directly using a PM CEMS. For this monitoring alternative, a direct PM concentration limit (equivalent to the conventional FCCU PM emission limit in terms of g PM/kg of coke burn-off) is included in the rule. Finally, in our review for Refinery NSPS J, we noted that, even with improved monitoring methods, periodic source testing is needed to verify the performance of the control system as it ages. In Refinery NSPS Ja, annual performance demonstrations are required for affected FCCU. The Refinery NSPS Ja standards for PM from FCCU reflect the latest developments in practices, processes and control technologies. In our current review of Refinery MACT 2, we did not identify any other developments in practices, processes or control technologies since we promulgated Refinery NSPS Ja in 2008.

The conclusions of the technology review conducted for the Refinery NSPS J PM emission limits are directly applicable to Refinery MACT 2; the initial Refinery MACT 2 rule recognized this by providing that compliance with Refinery NSPS J would also be compliance with Refinery MACT 2. We considered the impacts of proposing to revise Refinery MACT 2 to incorporate the developments in monitoring practices and control technologies reflected in the Refinery NSPS Ja limits and monitoring provisions.

As noted above, Refinery NSPS Ja includes a limit of 0.5 g PM/kg of coke burn-off for newly constructed sources. There would be no costs associated with requiring the lower emission limit of 0.5 g PM/kg of coke burn-off for Refinery MACT 2 new sources under CAA section 112(d)(6) because these sources would already be required to comply with that limit under Refinery NSPS Ja. Therefore, we are proposing that it is necessary pursuant to CAA section 112(d)(6) to revise Refinery MACT 2 to incorporate the Refinery NSPS Ja PM limit for new sources.

We are also proposing to establish emission limits and monitoring requirements in Refinery MACT 2 that are consistent with those in Refinery NSPS Ja. This option would not impose any additional cost on sources already subject to Refinery NSPS Ja. We note that for facilities subject to Refinery NSPS J, this would not lead to duplicative or conflicting monitoring requirements because Refinery NSPS J already includes a provision that allows affected facilities subject to Refinery NSPS J to instead comply with the provisions in Refinery NSPS Ja (see 40 CFR 60.100(e)).

In addition, in conjunction with our proposal to revise Refinery MACT 2 to include the more stringent requirements in Refinery NSPS Ja, we are proposing to remove the less stringent compliance option of meeting the requirements of Refinery NSPS J. As described previously, Refinery NSPS J includes an incremental PM emissions allowance for post-combustion devices and relies on a 30-percent opacity limit that is outdated and has been demonstrated to be ineffective at identifying exceedances of the 1.0 g PM/kg coke burn-off emissions limit.

We also reviewed the compliance monitoring requirements for the Refinery MACT 2 PM and Ni-based emission limits. As described previously, Refinery MACT 2 includes operating limits based on APCD operating parameters or site-specific opacity limits. There are differences between the monitoring approaches in Refinery MACT 2 for these limits and Refinery NSPS Ja monitoring approaches for the NSPS PM limit, so we evaluated whether it is necessary, pursuant to CAA section 112(d)(6), to revise the monitoring provisions in Refinery MACT 2 consistent with the requirements in Refinery NSPS Ja.

The first significant difference is in the averaging times used for the different operating limits. Refinery NSPS Ja requires a 3-hour rolling average for the operating limits for parametric monitoring systems; Refinery MACT 2 includes daily averaging of the operating limits. Typically, the averaging time for operating limits is based on the duration of the performance test used to establish those operating limits. As the performance test duration is 3 hours (three 1-hour test runs) and compliance with the PM (or Ni) emission limit is based on the average emissions during this 3-hour period, the most appropriate averaging period for these operating limits is 3 hours. Using a daily average could allow poor performance (*i.e.,* control equipment for shorter periods (*e.g.,* 3-hour averages that are higher than the PM emissions limit in Refinery NSPS Ja). For example, assume an operating limit developed from a performance test has a value of 1 and that values exceeding this level would suggest that the control system is not operating as well as during the performance test (*i.e.,* potentially exceeding the PM emission limit). If the control system is run for 18 hours operating at a level of 0.9 and 6 hours at a level of 1.2, the unit would be in compliance with the daily operating limit even though the unit may have 6 consecutive hours during which the operating limit was exceeded.

Reducing the averaging time does not impact the types of monitors required; it merely requires the owner or operator of the unit to pay more careful attention to the APCD operating parameters. We are proposing that it is necessary, pursuant to CAA section 112(d)(6), to incorporate the use of 3-hour averages rather than daily averages for parameter operating limits in Refinery MACT 2 for both the PM and Ni limits, because this is a cost-effective development in monitoring practice.

The site-specific opacity operating limit for PM in Refinery MACT 2 (for units not electing to comply with Refinery NSPS J) has a 1-hour averaging period, but the Ni operating limits (which use opacity monitoring) have a 24-hour averaging period. These averaging periods are inconsistent with the duration of the performance test, which is over a 3-hour period. We are proposing, pursuant to CAA section 112(d)(6), to incorporate the use of 3-hour averages for the site-specific opacity operating limit and the Ni operating limits rather than daily averages because this is a cost-effective development in monitoring practice.

We also compared the APCD-specific operating parameters used in Refinery MACT 2 to those that we promulgated for Refinery NSPS Ja. The Refinery NSPS Ja rule includes monitoring approaches that are not included in Refinery MACT 2. These include the option of using PM CEMS and requiring BLD for fabric filter control systems. Adding a PM CEMS as an option for demonstrating compliance with the Refinery MACT 2 PM limit (similar to what is provided in Refinery NSPS Ja) would not impact the costs of complying with Refinery MACT 2 because sources can choose whether or not to adopt this monitoring method. With respect to BLD, there is only one refinery that currently uses a baghouse (fabric filter) to control emissions from its FCCU (although one additional unit has indicated that it has plans to install a fabric filter control within the next few years). Under the existing requirements in Refinery MACT 2 (assuming that the FCCU currently operating with a fabric filter has not elected to comply with the Refinery NSPS J PM emission limit option), it is required to comply with a site-specific opacity operating limit. For new, reconstructed, or modified FCCU, Refinery NSPS Ja requires use of BLD. While we generally consider the BLD to be superior to opacity monitors for ensuring fabric filter control systems are operating efficiently, it is difficult to determine what, if any, increment in assurance that the unit is properly controlled would be achieved by requiring the one facility currently operating a fabric filter control system and complying with a site-specific opacity operating limit to switch from a COMS to BLD. Therefore, we are proposing that it is not necessary to require the one existing FCCU with a fabric filter control system to switch from COMS to a BLD system because this would require additional monitoring equipment (with additional costs) and little to no associated increase in assurance that the unit is properly controlled. Although we are not proposing to require existing sources using a fabric filter to use BLD, we are proposing to include BLD as an option to COMS; owners or operators of FCCU using fabric filter-type control systems at existing sources can elect (but are not required) to use BLD in lieu of COMS and the site-specific opacity operating limit.

The Refinery NSPS Ja monitoring requirements for ESP include CPMS for monitoring and recording the total power and the secondary current to the entire system. The current MACT requires monitoring voltage and secondary current or monitoring only the total power to the APCD. While these monitoring requirements are similar, we consider that the Refinery NSPS Ja requirements will provide improved operation of the ESP. As the monitors required to measure these parameters are a routine part of ESP installations, we project no additional costs for monitoring equipment. We expect that a new performance test would be needed to ensure that both total power and secondary current are recorded during the source test. As discussed later in this section, we are proposing to require ongoing performance tests regardless of the monitoring option, so we are not projecting any additional costs specific to revising the monitoring requirements for ESP. Because the Refinery NSPS Ja monitoring and operating requirements for ESP are expected to provide improved performance of the APCD with no incremental costs, we propose that it is necessary, pursuant to CAA section 112(d)(6), to incorporate the total power and the secondary current operating limits into Refinery MACT 2.

Refinery NSPS Ja provides a specific monitoring alternative to pressure drop for jet ejector-type wet scrubbers or any other type of wet scrubbers equipped with atomizing spray nozzles. Owners or operators of FCCU controlled by these types of wet scrubbers can elect to perform daily checks of the air or water pressure to the spray nozzle rather than monitor pressure. Refinery MACT 2 currently excludes these types of control systems from monitoring pressure drop but includes no specific monitoring to ensure the jet ejectors or atomizing spray nozzle systems are properly operating. Since proper functioning of the jet ejectors or atomizing spray nozzles is critical to ensuring these control systems operate at the level contemplated by the MACT, some monitoring/inspection requirement of these components is necessary to ensure compliance with the FCCU PM or Ni emission limit. The owner or operator of a jet ejector-type wet scrubber or other type of wet scrubber equipped with atomizing spray nozzles should be performing routine checks of these systems, such as the daily checks of the air or water pressure to the spray nozzles, as required in Refinery NSPS Ja. These daily checks are consistent with good operational practices for wet scrubbers and should not add significant burden to the FCCU wet scrubber owner or operator. For these reasons, we propose it is necessary to require owners or operators of a jet ejector-type wet scrubber or other type of wet scrubber equipped with atomizing spray nozzles to perform daily checks of the air or water pressure to the spray nozzles pursuant to CAA section 112(d)(6).

Finally, in our action promulgating Refinery NSPS Ja, we noted that, even with improved monitoring methods, periodic source testing is needed to verify the performance of the control system as it ages. In Refinery NSPS Ja, annual performance demonstrations are required for new sources. FCCU subject to Refinery MACT 2 as new sources would also be subject to Refinery NSPS Ja and would have to comply with the annual testing requirements in Refinery NSPS Ja. However, Refinery MACT 2 does not include periodic performance tests for any FCCU. We considered adding an annual testing requirement for FCCU subject to Refinery MACT 2. The annual nationwide cost burden exceeds $1 million per year and we project only modest improvement in control performance resulting from the performance demonstrations. We considered requiring FCCU performance tests once every 5 years (*i.e.,* once per title V permit period). The nationwide annual cost of this additional testing requirement for FCCU is projected to be, on average, $213,000 per year. We consider this to be a reasonable minimum frequency for which affected sources should demonstrate direct compliance with the FCCU emission limits and that this cost is reasonable. Therefore, we propose that it is

necessary, pursuant to CAA section 112(d)(6), to require a performance test once every 5 years for all FCCU under to Refinery MACT 2.

Organic HAP. Refinery MACT 2 uses CO as a surrogate for organic HAP and establishes an emission limit of 500 ppmv CO (dry basis). Some FCCU, referred to as complete-combustion FCCU, employ excess oxygen in the FCCU regenerator and are able to meet this emission limit without the need for a post-combustion device. Other FCCU, referred to as partial-combustion FCCU, do not supply enough air/oxygen for complete combustion of the coke to CO_2 and, therefore, produce a significant quantity of CO in the regenerator exhaust. Partial-combustion FCCU are typically followed by a post-combustion unit, commonly referred to as a CO boiler, to burn the CO in the regenerator exhaust in order to meet the 500 ppmv CO limit (and to recover useful heat from the exhaust stream).

In our review of Refinery NSPS J, we conducted a review of state and local regulations affecting refineries to identify control strategies to reduce CO emissions or VOC emissions from refinery sources (see *Review of VOC Emission Sources at Refineries,* December 14, 2005, Docket Item Number EPA–HQ–OAR–2007–0011–0043). We also conducted a review of federal, state and local regulations affecting refineries to identify control strategies to reduce CO emissions from refinery sources (see *Review of CO Emission Sources at Refineries,* December 22, 2005, Docket Item Number EPA–HQ–OAR–2007–0011–0044). We did not identify any developments in practices, processes and control technologies to reduce CO or VOC emissions from FCCU as part of the review of Refinery NSPS J, and we have not identified any developments in practices, processes and control technologies for FCCU that would reduce organic HAP since promulgation of Refinery MACT 2. We are proposing that it is not necessary to revise the regulatory provisions for organic HAP in the current MACT standards for FCCU, pursuant to CAA section 112(d)(6).

Inorganic HAP. As mentioned previously, Refinery MACT 2 includes a CO emission limit of 500 ppmv. Although this limit is expressly provided as a limit addressing organic HAP emissions, this emission limit is also expected to limit the emissions of oxidizable inorganic HAP, such as HCN. That is, the CO concentration limit was developed as an indicator of complete combustion for all oxidizable pollutants typically found in exhaust gas from the FCCU regenerator operated in partial burn mode. We note that HCN concentrations in FCCU regenerator exhaust with high CO levels also have high HCN concentrations and that HCN concentrations in the regenerator exhaust from complete-combustion FCCU (those meeting the 500 ppmv CO limit without the need for a post-combustion device) are much lower than those from partial burn FCCU prior to a post-combustion device. Thus, we consider that the CO emission limit also acts as a surrogate for the control of oxidizable inorganic HAP, such as HCN.

The source test data from the ICR effort revealed that HCN emissions from FCCU are greater than previous tests indicated, particularly for complete-combustion FCCU. The increase in HCN emissions was observed at units meeting lower NO_X emission limits, which have recently been required by consent decrees, state and local requirements and Refinery NSPS Ja. The higher HCN emissions from complete-combustion FCCU appear to be directly related to operational changes made in efforts to meet these lower NO_X emission limits (*e.g.,* reduced excess oxygen levels in the regenerator and reduced regenerator bed temperatures). These higher HCN emissions were only observed in complete-combustion FCCU; FCCU that operated in partial burn mode followed by a CO boiler or similar post-combustion device had significantly lower HCN emissions subsequent to the post-combustion device.

Based on our review of the available ICR data and the technologies used in practice, we considered establishing specific emission limits for HCN. In order to comply with emission limits for HCN, owners or operators of complete-combustion FCCU would either have to operate their FCCU regenerator at slightly higher temperatures and excess oxygen concentrations (to limit the formation of HCN in the regenerator) or employ a post-combustion device or thermal oxidizer to destroy HCN exhausted from the FCCU regenerator. However, each of these options comes with significant secondary energy and environmental impacts. First, both of these control strategies would yield a significant increase in NO_X emissions. We anticipate that most FCCU owners or operators would have to install a selective catalytic reduction (SCR) system to meet their NO_X emission limits, if applicable. Operation of the SCR would have energy impacts and may have additional secondary $PM_{2.5}$ impacts (associated with ammonia slip from the SCR). We expect that modifying the regenerator operating characteristics is the most cost-effective option, although installing and using a thermal oxidizer may be necessary, depending on the operational characteristics of the regenerator and the HCN control requirement. Using a thermal oxidizer to treat FCCU regenerator exhaust, a gas stream that has limited heating value (due to the already low CO concentrations) would be much more expensive and would have additional energy and secondary impacts associated with the auxiliary fuel needed for the device, as compared to modifying regenerator operating conditions.

We first performed a screening analysis of the impacts of making only operational changes to the FCCU with the highest HCN concentrations. If this control option is not cost effective for these FCCU, it would not be cost effective for units that have lower HCN concentrations and lower HCN emissions. Similarly, if operating changes in the FCCU regenerator alone are not cost effective, then we can assume that installing a thermal oxidizer to achieve this same level of HCN emission reductions would also not be cost effective. We calculated the cost of changing the regenerator parameters and adding an SCR for the FCCU with the highest HCN emissions rate reported in the ICR, which is an annual emissions rate of 460 tpy. This is also the largest FCCU in operation in the United States and its territories. Based on the size of this unit, we project that an SCR would be expected to cost approximately $13-million and have annualized costs of approximately $4.0-million/yr. Thus, if the HCN emissions can be reduced by 95 percent, the cost effectiveness would be approximately $9,000 per ton of HCN. A smaller FCCU had similar HCN concentrations and annual HCN emissions of 141 tpy. Based on the size of this unit, we project an SCR would be expected to cost approximately $7-million and have annualized costs of approximately $1.5-million/yr. Assuming a 95-percent reduction in HCN emissions, the cost effectiveness would be approximately $11,000 per ton of HCN. The second-highest emitting FCCU was larger than this unit, but had lower HCN concentrations. This third unit had emissions of 184 tpy. Based on the size of this unit, we expect that an SCR would cost approximately $9-million and have annualized costs of approximately $2.2-million/yr. Assuming a 95-percent reduction in HCN emissions, the cost effectiveness would be approximately $12,600 per ton of HCN.

These costs are for the FCCU with the largest HCN emissions and the lowest control cost (assuming operational

changes alone are insufficient to significantly reduce HCN emissions), and the average cost effectiveness for these units exceeds $10,000 per ton HCN emissions reduced. Based on the economies of scale and considering lower HCN concentrations for all other units, the costs per ton of HCN removed for a nationwide standard would be higher. If a post-combustion device is needed to achieve a specific HCN emissions limit, the costs would be even higher.

Based on the cost, secondary energy and secondary environmental impacts of an HCN emission limit beyond that achieved by the CO emission limit as a surrogate for HCN, we are proposing, at this time, that it is not necessary, pursuant to CAA section 112(d)(6), to revise the MACT standard to establish a separate HCN standard. As our understanding of the mechanisms of HCN and NO_X formation improves and as catalyst additives evolve, it may be possible to achieve both low NO_X and low HCN emissions without the use of an SCR and/or post-combustion controls. However, at this time our test data indicate an inverse correlation between these two pollutants. The three facilities with the highest HCN concentrations were the facilities with the lowest NO_X concentrations, all of which were below 20 ppmv (dry basis, 0-percent excess air) during the performance tests. While a 20 ppmv NO_X limit may be achievable, we anticipate that further reducing the NO_X new source performance limits for FCCU would either increase $PM_{2.5}$ secondary emissions (via the use of an SCR and its associated ammonia slip) or further increase HCN emissions (if combustion controls are used).

b. CRU Process Vents

A CRU is designed to reform (*i.e.,* change the chemical structure of) naphtha into higher-octane aromatics. The reforming process uses a platinum or bimetal (*e.g.,* platinum and rhenium) catalyst material. Small amounts of coke deposit on the catalyst during the catalytic reaction and this coke is burned off the catalyst to regenerate catalyst activity. There are three types of CRU classified by differences in how the units are designed and operated to effect reforming catalyst regeneration. Semi-regenerative reforming is characterized by shutting down the reforming unit at specified intervals, or at the operator's convenience, for in situ catalyst regeneration. Semi-regenerative CRU typically regenerate catalyst once every 8 to 18 months, with the regeneration cycle lasting approximately 2 weeks. Cyclic-regeneration reforming is characterized by continuous or continual reforming operation with periodic (but frequent) regeneration of catalyst in situ by isolating one of the reactors in the series, regenerating the catalyst, then returning the reactor to the reforming operation. The regeneration of the catalyst in a single reactor may occur numerous times per year (*e.g.,* once a month), and the regeneration of each reactor may take 3 to 5 days to complete. Continuous-regeneration reforming units use moving catalyst bed reactors situated vertically (which is why they are often referred to as platforming units). Catalyst flows down the series of reactors. At the bottom of the last reactor, catalyst is continually isolated and sent to a special regenerator. After regeneration, the regenerated catalyst is continually fed to the first (top) reactor. Thus, continuous-regeneration reforming units are characterized by continuous-reforming operation along with continuous-regeneration operation.

The catalytic reforming reaction is performed in a closed reactor system; there are no emissions associated with the processing portion of the CRU. There is a series of emission points associated with the CRU catalyst regenerator. Regardless of the type of CRU used, there is a series of steps conducted to effect catalyst regeneration. These steps are: (1) Initial depressurization/purge; (2) coke burn-off; (3) catalyst rejuvenation; and (4) reduction/final purge. The primary emissions during the depressurization/purge cycle are organic HAP. Inorganic HAP, predominately HCl and chlorine, are emitted during the coke burn-off and rejuvenation cycles. The reduction purge is mostly inert materials (nitrogen and/or hydrogen). Refinery MACT 2 contains organic HAP emission limits for the depressurization/purge cycle (purging prior to coke-burn-off) and inorganic HAP emission limits for the coke burn-off and catalyst rejuvenation cycles. Our technology review, summarized below, considers each of these emission limits separately. For additional details on the technology review for CRU, see *Technology Review Memorandum for Catalytic Reforming Units at Petroleum Refineries* in Docket ID Number EPA–HQ–OAR–2010–0682.

Organic HAP. Refinery MACT 2 requires the owner or operator to comply with either a 98-percent reduction of TOC or non-methane TOC, or an outlet concentration of 20 ppmv or less (dry basis, as hexane, corrected to 3-percent oxygen). The emission limits for organic HAP for the CRU do not apply to emissions from process vents during depressuring and purging operations when the reactor vent pressure is 5 psig or less. Control technologies used include directing the purge gas directly to the CRU process heater to be burned, recovering the gas to the facility's fuel gas system, or venting to a flare or other APCD. The pressure limit exclusion was provided to allow atmospheric venting of the emissions when the pressure of the vessel fell below that needed to passively direct the purge gas to the APCD (most commonly the CRU process heater or flare).

We did not identify any developments in practices, processes and control technologies for reducing organic HAP emissions from CRU. However, as noted in section IV.A.2 of this preamble, we are proposing to amend the pressure limit exclusion pursuant to CAA sections 112(d)(2) and (3) to clarify that this limit only applies during passive vessel depressuring. Also, as described in section IV.A.3 of this preamble, we are proposing revisions to Refinery MACT 1 and 2, pursuant to CAA sections 112(d)(2) and (3), to ensure flares used as APCD meet the required destruction efficiency, which includes flares used to control the organic HAP emissions from the CRU depressurization/purge vent streams.

Inorganic HAP. Refinery MACT 2 uses HCl as a surrogate for inorganic HAP during the coke burn-off and rejuvenation cycles. Refinery MACT 2 requires owners or operators of existing semi-regenerative CRU to reduce uncontrolled emissions of HCl by 92-percent by weight or to a concentration of 30 ppmv (dry basis, corrected to 3-percent oxygen) during the coke burn-off and rejuvenation cycles. Owners or operators of new semi-regenerative CRU, new or existing cyclic CRU, or new or existing continuous CRU are required to reduce uncontrolled emissions of HCl by 97-percent by weight or to a concentration of 10 ppmv (dry basis, corrected to 3-percent oxygen) during the coke burn-off and rejuvenation cycles. Technologies used to achieve these limits include caustic spray injection, wet scrubbers, and solid adsorption systems. We conducted a technology review for CRU by reviewing the ICR responses and scientific literature. We did not identify any developments in practices, processes and control technologies for reducing inorganic HAP emissions from CRU. We are proposing that it is not necessary to revise the current inorganic HAP MACT standards for CRU, pursuant to CAA section 112(d)(6).

c. SRU Process Vents

Most sulfur recovery plants at petroleum refineries use the Claus reaction to produce elemental sulfur. In the Claus reaction, two moles of hydrogen sulfide (H_2S) react with one mole of SO_2 in a catalytic reactor to form elemental sulfur and water vapor. Prior to the Claus reactors, one-third of the H_2S in the sour gas feed to the sulfur plant must be oxidized to SO_2 to have the correct proportion of H_2S and SO_2 for the Claus reaction. This oxidation step is performed in the ''Claus burner.'' The remaining gas stream, after the elemental sulfur is condensed, is referred to as ''tail gas.'' HAP emissions in tail gas from sulfur recovery plants are predominately COS and CS_2, which are primarily formed as side reactions of the Claus process.

Refinery MACT 2 contains HAP standards for SRU that were based on the Refinery NSPS J SO_2 and reduced sulfur compounds emission limits. Refinery NSPS J includes an emission limit of 300 ppmv reduced sulfur compounds for a reduction control system not followed by an incinerator, and an emission limit of 250 ppmv SO_2 (dry basis, 0-percent excess air) for oxidative control systems or reductive control systems followed by incineration. These Refinery NSPS J limits apply only to Claus sulfur recovery plants with a sulfur recovery capacity greater than 20 long tons per day (LTD). These emission limits effectively required sulfur recovery plants to achieve 99.9-percent sulfur recovery.

Refinery MACT 2 defines SRU as a process unit that recovers elemental sulfur from gases that contain reduced sulfur compounds and other pollutants, usually by a vapor-phase catalytic reaction of sulfur dioxide and hydrogen sulfide (see 40 CFR 63.1579). This definition specifically excludes sulfur recovery processes that do not recover elemental sulfur, such as the LO–CAT II process, but does not necessarily limit applicability to Claus SRU. Refinery MACT 2 requires owners or operators of an SRU that is subject to Refinery NSPS J to meet the Refinery NSPS J limits. Owners or operators of an SRU that is not subject to Refinery NSPS J can elect to meet the emission limits in Refinery NSPS J or meet a reduced sulfur compound limit of 300 ppmv (dry basis, 0-percent excess air) regardless of the type of control system or the presence of an incinerator. Unlike Refinery NSPS J, Refinery MACT 2 does not have a capacity applicability limit, so this 300 ppmv reduced sulfur compound limit is applicable to all SRU (as that term is defined), regardless of size.

Upon completion of our technology review for Refinery NSPS J, we promulgated Refinery NSPS Ja, which includes new provisions for the sulfur recovery plant. First, Refinery NSPS Ja limits are now applicable to all sulfur recovery plants, not just Claus sulfur recovery plants. Second, emission limits were added for sulfur recovery plants with a capacity of 20 LTD or less, to require new, small sulfur recovery plants to achieve a target sulfur recovery efficiency of 99-percent. These limits are a factor of 10 higher than the emission limits for larger sulfur recovery plants (*i.e.,* 3,000 ppmv reduced sulfur compounds for a reduction control system not followed by an incinerator and 2,500 ppmv SO_2 for oxidative control systems or reductive control systems followed by incineration). Refinery NSPS J did not include emission limits for these smaller sulfur recovery plants. Third, new correlations were introduced to provide equivalent emission limits for systems that use oxygen-enriched air in their Claus burner.

The technology review conducted for Refinery NSPS J focused on SO_2 emissions. Under our current technology review for Refinery MACT 2, we considered the developments in practices, processes or control technologies identified in the Refinery NSPS J technology review as they pertain to HAP emissions and the existing Refinery MACT 2 requirements.

We considered the new Refinery NSPS Ja limits for small sulfur recovery plants. While Refinery NSPS Ja establishes criteria pollutant emission limits for these smaller sulfur recovery plants that were previously unregulated for such emissions, these sources are already covered under Refinery MACT 2. Refinery MACT 2 requires these SRU to meet a 300 ppmv reduced sulfur compound limit, which is more stringent than the 3,000 ppmv limit established in Refinery NSPS Ja.

We also considered the new correlations in Refinery NSPS Ja for SRU that use oxygen-enriched air in their Claus burner. In the technology review under Refinery NSPS J, we identified a change in practice in the operation of certain Claus SRU. At the time we promulgated Refinery MACT 2, we assumed that all units were using ambient air in the Claus burner, and we established the same emission limits as in Refinery NSPS J. Now, however, we understand that some facilities are using oxygen-enriched air. This practice lowers the amount of inert gases introduced into the SRU and improves operational performance and reliability of the sulfur recovery plant. Air is approximately 20.9 percent by volume oxygen and 79.1-percent inert gases (predominately nitrogen with 1-percent argon and other inert gases). The inert gases introduced in the Claus burner become a significant portion of the overall tail gas flow. When oxygen enrichment is used in the Claus burner, there are fewer inert gases in the tail gas and a lower overall tail gas flow rate. The same molar flow rate of reduced sulfur compounds will be present in the tail gas, but without the additional flow of inerts from the ambient air, the concentration of the reduced sulfur compounds (or SO_2) in the tail gas is higher.

In developing Refinery NSPS Ja, we included a correlation equation that facilities can use to adjust the concentration limit based on the enriched-oxygen concentration used in the Claus burner. This equation is designed to allow the same mass of emissions for these units as is allowed for units using only ambient air. That is, the emission equation establishes a concentration limit for units using oxygen enrichment so that the mass emissions from the unit do not exceed the mass emissions allowed under the 250 ppmv SO_2 (or 300 ppmv reduced sulfur compounds) emissions limits in Refinery NSPS J and in Refinery MACT 2. The new equation in Refinery NSPS Ja for large sulfur recovery plants (those with sulfur recovery greater than 20 LTD) provides an equivalent mass emissions rate of reduced sulfur HAP from the SRU as is currently required in Refinery MACT 2 while allowing a practice that improves the operational reliability of the unit. There are no costs to providing this option for units using oxygen-enriched air because: (1) It is an option that the owner or operator can elect to meet instead of the xisting 250 ppmv SO_2 emissions limit and (2) owners or operators of SRU that use oxygen-enriched air are expected to already routinely monitor the inlet air oxygen concentration for operational purposes. Therefore, we are proposing that it is necessary, pursuant to CAA section 112(d)(6), to amend Refinery MACT 2 sulfur recovery requirements to include this equation that addresses the use of oxygen-enriched air as a development in practice in SRU process operations.

The emission limits for large sulfur recovery plants (those with sulfur recovery greater than 20 LTD) in Refinery NSPS Ja are equivalent to those in Refinery MACT 2. We are proposing to allow owners or operators subject to Refinery NSPS Ja limits for sulfur

recovery plants with a capacity greater than 20 LTD to comply with Refinery NSPS Ja as a means of complying with Refinery MACT 2.

We have not identified any additional developments in practices, processes or control technologies for HAP from SRU since development of Refinery NSPS Ja.

C. What are the results of the risk assessment and analyses?

1. Inhalation Risk Assessment Results

Table 10 of this preamble provides an overall summary of the results of the inhalation risk assessment.

TABLE 10—PETROLEUM REFINING SOURCE SECTOR INHALATION RISK ASSESSMENT RESULTS

Maximum individual cancer risk (-in-1 million) [a]	Estimated population at increased risk levels of cancer	Estimated annual cancer incidence (cases per year)	Maximum chronic non-cancer TOSHI [b]	Maximum screening acute non-cancer HQ [c]
Actual Emissions				
60	≥ 1-in-1 million: 5,000,000 ≥ 10-in-1 million: 100,000 ≥ 100-in-1 million: 0	0.3	0.9	HQ_{REL} = 5 (Nickel Compounds).
Allowable Emissions [d]				
100	≥ 1-in-1 million: 7,000,000 [e] ≥ 10-in-1 million: Greater than 90,000 [e]. ≥ 100-in-1 million: 0	0.6	1	—

[a] Estimated maximum individual excess lifetime cancer risk due to HAP emissions from the source category.
[b] Maximum TOSHI. The target organ with the highest TOSHI for the Petroleum Refining source sector is the thyroid system for actual emissions and the neurological system for allowable emissions.
[c] The maximum off-site HQ acute value of 5 is driven by emissions of nickel from CCU. See section III.A.3 of this preamble for explanation of acute dose-response values. Acute assessments are not performed on allowable emissions because of a lack of detailed hourly emissions data. However, because of the conservative nature of the actual annual to actual hourly emissions rate multiplier, allowable acute risk estimates will be comparable to actual acute estimates.
[d] The development of allowable emission estimates can be found in the memo entitled *Refinery Risk Estimates for Modeled "Allowable" Emissions,* which can be found in Docket ID Number EPA–HQ–OAR–2010–0682.
[e] Population risks from allowable emissions were only calculated for the model plant emissions (REM) approach. For the 138 facilities modeled using the modeled plant approach the population risks greater than 10-in-1 million was estimated to be 90,000. If we consider the second approach to determining allowable emissions (combined the results of the actual and REM emissions estimates) we estimate that the allowable population risks greater than 10-in-1 million would be greater than 90,000 people. Further, the number of people above 1-in-1 million would also be higher than the 7,000,000 estimated using the REM model.

The inhalation risk modeling performed to estimate risks based on actual emissions relied primarily on emissions data from the ICR, updated based on our quality assurance review as described in section III.A.1 of this preamble.

The results of the chronic baseline inhalation cancer risk assessment indicate that, based on estimates of current actual emissions, the maximum individual lifetime cancer risk (MIR) posed by the refinery source category is 60-in-1 million, with benzene and naphthalene emissions from equipment leaks and storage tanks accounting for 98 percent of the MIR risk. The total estimated cancer incidence from refinery emission sources based on actual emission levels is 0.3 excess cancer cases per year or one case in every 3.3 years, with emissions of naphthalene, benzene, and 2-methylnaphthalene contributing 22 percent, 21 percent and 13 percent, respectively, to this cancer incidence. In addition, we note that approximately 100,000 people are estimated to have cancer risks greater than 10-in-1 million, and approximately 5,000,000 people are estimated to have risks greater than 1-in-1 million as a result of actual emissions from these source categories. When considering the MACT-allowable emissions, the maximum individual lifetime cancer risk is estimated to be up to 100-in-1 million, driven by emissions of benzene and naphthalene from refinery fugitives (*e.g.,* storage tanks, equipment leaks and wastewater) and the estimated cancer incidence is estimated to be 0.6 excess cancer cases per year or one excess case in every 1.5 years. Greater than 90,000 people were estimated to have cancer risks above 10-in-1 million and approximately 7,000,000 people were estimated to have cancer risks above 1-in-1 million considering allowable emissions from all petroleum refineries.

The maximum modeled chronic non-cancer HI (TOSHI) value for the source sector based on actual emissions was estimated to be less than 1. When considering MACT-allowable emissions, the maximum chronic non-cancer TOSHI value was estimated to be about 1.

2. Acute Risk Results

Our screening analysis for worst-case acute impacts based on actual emissions indicates the potential for five pollutants—acetaldehyde, acrolein, arsenic, benzene and nickel—to exceed an HQ value of 1, with an estimated worst-case maximum HQ of 5 for nickel based on the REL values. This REL occurred at a facility reporting nickel emissions from the FCCU vent. One hundred thirty-six of the 142 petroleum refineries had an estimated worst-case HQ less than or equal to 1 for all HAP; except for the one facility that had an estimated REL of 5, the remaining 5 refineries with an REL above 1 had an estimated worst-case HQ less than or equal to 3.

To better characterize the potential health risks associated with estimated worst-case acute exposures to HAP, and in response to a key recommendation from the SAB's peer review of EPA's RTR risk assessment methodologies, we examine a wider range of available acute health metrics than we do for our chronic risk assessments. This is in acknowledgement that there are generally more data gaps and inconsistencies in acute reference values than there are in chronic reference values. By definition, the acute CalEPA REL represents a health-

protective level of exposure, with no risk anticipated below those levels, even for repeated exposures; however, the health risk from higher-level exposures is unknown. Therefore, when a CalEPA REL is exceeded and an AEGL–1 or ERPG–1 level is available (*i.e.,* levels at which mild effects are anticipated in the general public for a single exposure), we have used them as a second comparative measure. Historically, comparisons of the estimated maximum off-site 1-hour exposure levels have not been typically made to occupational levels for the purpose of characterizing public health risks in RTR assessments. This is because occupational ceiling values are not generally considered protective for the general public since they are designed to protect the worker population (presumed healthy adults) for short-duration increases in exposure (less than 15 minutes). As a result, for most chemicals, the 15-minute occupational ceiling values are set at levels higher than a 1-hour AEGL–1, making comparisons to them irrelevant unless the AEGL–1 or ERPG–1 levels are also exceeded. Such is not the case when comparing the available acute inhalation health effect reference values for some of the pollutants considered in this analysis.

The worst-case maximum estimated 1-hour exposure to acetaldehyde outside the facility fence line for the source categories is 1 mg/m^3. This estimated worst-case exposure exceeds the 1-hour REL by a factor of 2 (HQ_{REL}=2) and is well below the 1-hour AEGL–1 (HQ_{AEGL-1}=0.01) and the ERPG–1 (HQ_{ERPG-1}=0.05).

The worst-case maximum estimated 1-hour exposure to acrolein outside the facility fence line for the source categories is 0.005 mg/m^3. This estimated worst-case exposure exceeds the 1-hour REL by a factor of 2 (HQ_{REL}=2) and is below the 1-hour AEGL–1 (HQ_{AEGL-1}=0.1) and the ERPG–1 (HQ_{ERPG-1}=0.04).

The worst-case maximum estimated 1-hour exposure to nickel compounds outside the facility fence line for the source categories is 0.001 mg/m^3. This estimated worst-case exposure exceeds the 1-hour REL by a factor of 5 (HQ_{REL}=5). There are no AEGL, ERPG or short-term occupational values for nickel to use as comparison to the acute 1-hour REL value.

The worst-case maximum estimated 1-hour exposure to arsenic compounds outside the facility fence line for the source categories is 0.0004 mg/m^3. This estimated worst-case exposure exceeds the 1-hour REL by a factor of 2 (HQ_{REL}=2). There are no AEGL, ERPG or short-term occupational values for arsenic to use as comparison to the acute 1-hour REL value.

The maximum estimated 1-hour exposure to benzene outside the facility fence line is 2.7 mg/m^3. This estimated exposure exceeds the REL by a factor of 2 (HQ_{REL}=2), but is significantly below both the 1-hour ERPG–1 and AEGL–1 value (HQ ERPG–1 (or AEGL–1) = 0.02). This exposure estimate neither exceeds the AEGL–1/ERPG–1 values, nor does it exceed workplace ceiling level guidelines designed to protect the worker population for short-duration exposure (less than 15 minutes) to benzene, as discussed below. The occupational short-term exposure limit (STEL) standard for benzene developed by the Occupational Safety and Health Administration is 16 mg/m^3, ''as averaged over any 15-minute period.'' [33] Occupational guideline STEL for exposures to benzene have also been developed by the American Conference of Governmental Industrial Hygienists (ACGIH) [34] for less than 15 minutes [35] (ACGIH threshold limit value (TLV)–STEL value of 8.0 mg/m^3), and by the National Institute for Occupational Safety and Health (NIOSH) [36] ''for any 15 minute period in a work day'' (NIOSH REL–STEL of 3.2 mg/m^3). These shorter duration occupational values indicate potential concerns regarding health effects at exposure levels below the 1-hour AEGL–1 value.

All other HAP and facilities modeled had worst-case acute HQ values less than 1, indicating that the HAP emissions are believed to be without appreciable risk of acute health effects. In characterizing the potential for acute non-cancer risks of concern, it is important to remember the upward bias of these exposure estimates (*e.g.,* worst-case meteorology coinciding with a person located at the point of maximum concentration during the hour) and to consider the results along with the conservative estimates used to develop hourly emissions as described earlier, as well as the screening methodology. Refer to the memo in the docket for this rulemaking (Docket ID Number EPA–HQ–OAR–2010–0682, *Derivation of hourly emission rates for petroleum refinery emission sources used in the acute risk analysis*) for a detailed description of how the hourly emissions were developed for this source sector.

3. Multipathway Risk Screening Results

Results of the worst-case Tier I screening analysis indicate that PB–HAP emissions (based on estimates of actual emissions) from several facilities in this source sector exceed the screening emission rates for POM (PAH), CDDF, mercury compounds, and cadmium compounds. For the compounds and facilities that did not screen out at Tier I, we conducted a Tier II screen. The Tier II screen replaces some of the assumptions used in Tier I with site-specific data, including the land use around the facilities, the location of fishable lakes, and local wind direction and speed. The Tier II screen continues to rely on high-end assumptions about consumption of local fish and locally grown or raised foods (adult female angler at 99th consumption for fish [37] and 90th percentile for consumption of locally grown or raised foods [38]) and uses an assumption that the same individual consumes each of these foods in high end quantities (*i.e.,* that an individual has high end ingestion rates for each food). The result of this analysis was the development of site-specific emission screening levels for POM, CDDF, mercury compounds, and cadmium compounds. It is important to note that, even with the inclusion of some site-specific information in the Tier II analysis, the multi-pathway screening analysis is a still a very conservative, health-protective assessment (*e.g.,* upper-bound consumption of local fish, locally grown, and/or raised foods) and in all likelihood will yield results that serve as an upper-bound multi-pathway risk associated with a facility.

While the screening analysis is not designed to produce a quantitative risk result, the factor by which the emissions exceed the screening value serves as a rough gauge of the ''upper-limit'' risks we would expect from a facility. Thus, for example, if a facility emitted a PB–HAP carcinogen at a level 2 times the screening value, we can say with a high degree of confidence that the actual maximum cancer risks will be less than

[33] 29 CFR 1910.1028, Benzene.

[34] ACGIH (2001) Benzene. In *Documentation of the TLVs® and BEIs® with Other Worldwide Occupational Exposure Values.* ACGIH, 1300 Kemper Meadow Drive, Cincinnati, OH 45240 (ISBN: 978–1–882417–74–1) and available online at *http://www.acgih.org.*

[35] The ACGIH definition of a TLV–STEL states that ''Exposures above the TLV–TWA up to the TLV–STEL should be less than 15 minutes, should occur no more than four times per day, and there should be at least 60 minutes between successive exposures in this range.''

[36] NIOSH. *Occupational Safety and Health Guideline for Benzene; http://www.cdc.gov/niosh/docs/81-123/pdfs/0049.pdf.*

[37] Burger, J. 2002. Daily consumption of wild fish and game: Exposures of high end recreationists. International Journal of Environmental Health Research 12:343–354.

[38] U.S. EPA. Exposure Factors Handbook 2011 Edition (Final). U.S. Environmental Protection Agency, Washington, DC, EPA/600/R–09/052F, 2011.

2-in-1 million. Likewise, if a facility emitted a noncancer PB–HAP at a level 2 times the screening level, the maximum noncancer risks would represent a HQ less than 2. The high degree of confidence comes from the fact that the screens are developed using the very conservative (health-protective) assumptions that we describe above.

Based on the Tier II screening analysis, one facility emits cadmium compounds above the Tier II screening level and exceeds that level by about a factor of 2. Twenty-three facilities emit CDDF as 2,3,7,8-tetrachlorodibenzo-p-dioxin toxicity equivalent (TEQ) above the Tier II screening level, and the facility with the highest emissions of dioxins exceeds the Tier II screening level by about a factor of 40. No facilities emit mercury compounds above the Tier II screening levels. Forty-four facilities emit POM as benzo(a)pyrene TEQ above the Tier II screening level, and the facility with the highest emissions of POM as benzo(a)pyrene TEQ exceeds its screening level by a factor of 30.

Polychlorinated biphenyls (PCB) are PB–HAP that do not currently have multi-pathway screening values and so are not evaluated for potential non-inhalation risks. These HAP, however, are not emitted in appreciable quantities (0.001 tpy) from refinery operations, and we do not believe they contribute to multi-pathway risks for this source category.

Results of the analysis for lead indicate that the maximum annual off-site ambient lead concentration was only 2 percent of the NAAQS for lead, and even if the total annual emissions occurred during a 3-month period, the maximum 3-month rolling average concentrations would still be less than 8 percent of the NAAQS, indicating that there is no concern for multi-pathway risks due to lead emissions.

4. Refined Multipathway Case Study

To gain a better understanding of the uncertainty associated with the multipathway Tier I and II screening analysis, a refined multipathway case study using the TRIM.Fate model was conducted for a single petroleum refinery. The site, a refinery in St. John the Baptist Parish, Louisiana, was selected based upon its close proximity to nearby lakes and farms as well as having one of the highest potential multipathway risks for PAH based on the Tier II analysis. The refined analysis for this facility showed that the Tier II screen for each pollutant over-predicted the potential risk when compared to the refined analysis results. For this site, the Tier II screen for mercury indicated that mercury emissions were 3 times lower than the screening value, indicating a potential maximum HQ for mercury of 0.3. In the refined analysis, the potential HQ was 0.04 or about 7 times lower than that predicted by the Tier II screen. For cadmium emissions, the Tier II screen for this facility indicated that cadmium emissions were about 20 times lower than the screening value, indicating a potential maximum HQ for mercury of 0.05. The results of the refined analysis for the selected site in Louisiana show a maximum cadmium HQ of 0.02 or about 3 times lower than that predicted by the Tier II screen. For PAH emissions, the site selected for the refined analysis had PAH emissions 20 times the PAH Tier II screening value, indicating a potential cancer risk of 20-in-1 million. When the more refined analysis was conducted for this site, the potential cancer risks were estimated to be 2-in-1 million or about 14 times lower than predicted by the Tier II analysis. Finally, for the facility selected for the refined assessment, the emissions of CDDF as 2,3,7,8-tetrachlorodibenzo-p-dioxin TEQ are 5 times higher than the dioxin Tier II screening value, indicating a potential maximum cancer risk of 5–in-1 million. In the refined assessment, the cancer risk from dioxins was estimated to be 2-in-1 million, about one-third of the estimate from the Tier II screen.

Overall, the refined analysis predicts a potential lifetime cancer risk of 4-in-1 million to the maximum most exposed individual (MIR). The non-cancer HQ is predicted to be well below 1 for all target organs. The chronic inhalation cancer risk assessment estimated inhalation cancer risk around this same facility to be approximately 10-in-1 million, due in large part to emissions of naphthalene and 2-methylnaphthalene (both non-persistent, bioaccumulative, and toxic (PBT) HAP). Thus, although highly unlikely, if around this facility the person with the highest chronic inhalation cancer risk is also the same person with the highest individual multipathway cancer risk, then the combined, worst-case MIR for that facility could theoretically be 10-in-1 million (risk estimates are expressed as 1 significant figure).

While this refined assessment was performed on only a single facility, the results of this single refined analysis indicate that if refined analyses were performed for other sites, the risk estimates would consistently be lower than those estimated by the Tier II analysis. In addition, the risks predicted by the multipathway analyses at most facilities are considerably lower than the risk estimates predicted by the inhalation assessment, indicating that the inhalation risk results are in all likelihood the primary factor in our residual risk determination for this source category.

Further details on the site-specific case study can be found in Appendix 10 of the *Draft Residual Risk Assessment for the Petroleum Refining Source Sector,* which is available in Docket ID Number EPA–HQ–OAR–2010–0682.

5. Environmental Risk Screening Results

As described in the *Draft Residual Risk Assessment for the Petroleum Refining Source Sector,* which is available in Docket ID Number EPA–HQ–OAR–2010–0682, we conducted an environmental risk screening assessment for the petroleum refineries source category. In the Tier I screening analysis for PB–HAP (other than lead, which was evaluated differently, as noted in section III.A.6 of this preamble), the individual modeled Tier I concentrations for one facility in the source category exceeded some of the ecological benchmarks for mercury. In addition, Tier I modeled concentrations for four facilities exceeded sediment and soil ecological benchmarks for PAH. Therefore, we conducted a Tier II assessment.

In the Tier II screening analysis for PB–HAP, none of the individual modeled concentrations for any facility in the source category exceeded any of the ecological benchmarks (either the LOAEL or NOAEL).

For lead compounds, we did not estimate any exceedances of the secondary lead NAAQS. Therefore, we did not conduct further assessment for lead compounds.

For acid gases, the average modeled concentration around each facility (*i.e.,* the average concentration of all off-site data points in the modeling domain) did not exceed any ecological benchmark. In addition, for both HCL and HF, each individual concentration (*i.e.,* each off-site data point in the modeling domain) was below the ecological benchmarks for all facilities.

6. Facility-Wide Risk Results

Table 11 of this preamble displays the results of the facility-wide risk assessment.

TABLE 11—PETROLEUM REFINING FACILITY-WIDE RISK ASSESSMENT RESULTS

Number of facilities analyzed	142
Cancer Risk:	
Estimated maximum facility-wide individual cancer risk (-in-1 million)	70
Number of facilities with estimated facility-wide individual cancer risk of 10-in-1 million or more	54
Number of petroleum refining operations contributing 50 percent or more to facility-wide individual cancer risk of 10-in-1 million or more	50
Number of facilities with facility-wide individual cancer risk of 1-in-1 million or more	115
Number of petroleum refining operations contributing 50 percent or more to facility-wide individual cancer risk of 1-in-1 million or more	107
Chronic Non-cancer Risk:	
Maximum facility-wide chronic non-cancer TOSHI	4
Number of facilities with facility-wide maximum non-cancer TOSHI greater than 1	5
Number of petroleum refining operations contributing 50 percent or more to facility-wide maximum non-cancer TOSHI of 1 or more	0

The maximum individual cancer whole-facility risk from all HAP emissions at any petroleum refinery is estimated to be 70-in-1 million, based on actual emissions. Of the 142 facilities included in this analysis, 54 have facility-wide maximum individual cancer risks of 10-in-1 million or greater. At the majority of these facilities (50 of 54), the petroleum refinery operations account for over 50 percent of the risk.

There are 115 facilities with facility-wide maximum individual cancer risks of 1-in-1 million or greater. At the majority of these facilities (107 of 115), the petroleum refinery operations account for over 50 percent of the risk. The facility-wide maximum individual chronic non-cancer TOSHI is estimated to be 4, based on actual emissions. Of the 142 refineries included in this analysis, five have a TOSHI value greater than 1. The highest non-cancer TOSHI results from emissions of chlorine from cooling towers. In each case, the petroleum refinery operations account for less than 20 percent of the TOSHI values greater than 1.

Additional detail regarding the methodology and the results of the facility-wide analyses are included in the risk assessment documentation (*Draft Residual Risk Assessment for the Petroleum Refining Source Sector*), which is available in the docket for this rulemaking (Docket ID Number EPA–HQ–OAR–2010–0682).

7. What demographic groups might benefit from this regulation?

To examine the potential for any environmental justice issues that might be associated with the source categories, we performed a demographic analysis of the population close to the facilities. In this analysis, we evaluated the distribution of HAP-related cancer and non-cancer risks from petroleum refineries across different social, demographic, and economic groups within the populations living near facilities identified as having the highest risks. The methodology and the results of the demographic analyses are included in a technical report, *Draft Risk and Technology Review—Analysis of Socio-Economic Factors for Populations Living Near Petroleum Refineries,* available in the docket for this action (Docket ID Number EPA–HQ–OAR–2010–0682).

The results of the demographic analysis are summarized in Table 12 of this preamble. These results, for various demographic groups, are based on the estimated risks from actual emissions levels for the population living within 50 km of the facilities.

TABLE 12—PETROLEUM REFINING DEMOGRAPHIC RISK ANALYSIS RESULTS

	Nationwide	Population with cancer risk at or above 1-in-1 million	Population with chronic hazard index above 1
Total Population	312,861,265	5,204,234	0
Race by Percent			
White	72	50	0
All Other Races	28	50	0
Race by Percent			
White	72	50	0
African American	13	28	0
Native American	1	1	0
Other and Multiracial	14	21	0
Ethnicity by Percent			
Hispanic	17	29	0
Non-Hispanic	83	71	0
Income by Percent			
Below Poverty Level	14	21	0
Above Poverty Level	86	79	0

TABLE 12—PETROLEUM REFINING DEMOGRAPHIC RISK ANALYSIS RESULTS—Continued

	Nationwide	Population with cancer risk at or above 1-in-1 million	Population with chronic hazard index above 1
Education by Percent			
Over 25 and without High School Diploma	15	23	0
Over 25 and with a High School Diploma	85	77	0

The results of the demographic analysis indicate that emissions from petroleum refineries expose approximately 5,000,000 people to a cancer risk at or above 1-in-1 million. Implementation of the provisions included in this proposal is expected to reduce the number of people estimated to have a cancer risk greater than 1-in-1 million due to HAP emissions from these sources from 5,000,000 people to about 4,000,000. Our analysis of the demographics of the population within 50 km of the facilities indicates potential disparities in certain demographic groups, including the African American, Other and Multiracial, Hispanic, Below the Poverty Level, and Over 25 without a High School Diploma. The population living within 50 km of the 142 petroleum refineries has a higher percentage of minority, lower income and lower education persons when compared to the nationwide percentages of those groups. For example, 50 percent are in one or more minority demographic group, compared to 28 percent nationwide. As noted above, approximately 5,000,000 people currently living within 50 km of a petroleum refinery have a cancer risk greater than 1-in-1 million. We would expect that half of those people are in one or more minority demographic groups.

Because minority groups make up a large portion of the population living near refineries, as compared with their representation nationwide, those groups would similarly see a greater benefit from the implementation of the controls proposed in this rule, if finalized. For example, we estimate that after implementation of the controls proposed in this action (*i.e.,* post-controls), about 1,000,000 fewer people will be exposed to cancer risks greater than 1-in-1 million (*i.e.,* 4,000,000 people). Further, we estimate that approximately 500,000 people no longer exposed to a cancer risk greater than 1-in-1 million would be in a minority demographic group. The post-control risk estimates are discussed further in section III.A.5 of this preamble.

Although the EPA's proposed fenceline monitoring requirement is intended to ensure that owners and operators monitor, manage and, if necessary, reduce fugitive emissions of HAP, we also expect the collected fenceline data to help the EPA understand and identify emissions of benzene and other fugitive emissions that are impacting communities in close proximity to the facility. While currently-available emissions and monitoring data do not indicate that risks to nearby populations are unacceptable (see section IV.D.1 of this preamble), we recognize that the collection of additional data through routine fenceline monitoring can provide important information to communities concerned with potential risks associated with emissions from fugitive sources. We note that the data we are proposing to collect on a semiannual basis may include exceedances of the fenceline action level that a facility could have addressed or could still be actively addressing at the time of the report. As noted in section IV.B.1.h of this preamble, directly monitoring fugitive emissions from each potential emissions source at the facility is impractical. Fenceline monitoring offers a cost-effective alternative for monitoring fugitive emissions from the entire facility. The EPA's proposal to require the electronic reporting of fenceline monitoring data on a semiannual basis will ensure that communities have access to data on benzene levels near the facility, which is directly relevant to the potential health risks posed by the facility. The proposed requirements for fenceline monitoring and corrective action when fugitive emissions from a facility exceed the specified corrective action level will serve as an important backstop to protect the health of the populations surrounding the facility, including minority and low-income populations.

D. What are our proposed decisions regarding risk acceptability, ample margin of safety and adverse environmental effects?

1. Risk Acceptability

As noted in section II.A.1 of this preamble, the EPA sets standards under CAA section 112(f)(2) using ''a two-step standard-setting approach, with an analytical first step to determine an 'acceptable risk' that considers all health information, including risk estimation uncertainty, and includes a presumptive limit on maximum individual lifetime risk (MIR) of approximately 1 in 10 thousand.[39] '' (54 FR 38045, September 14, 1989).

In this proposal, we estimate risks based on actual emissions from petroleum refineries. We also estimate risks from allowable emissions; as discussed earlier, we consider our analysis of risk from allowable emissions to be conservative and as such to represent an upper bound estimate on risk from emissions allowed under the current MACT standards for the source categories.

a. Estimated Risks From Actual Emissions

The baseline inhalation cancer risk to the individual most exposed to emissions from sources regulated by Refinery MACT 1 and 2 is 60-in-1 million based on actual emissions. The estimated incidence of cancer due to inhalation exposures is 0.3 excess cancer cases per year, or 1 case every 3.3 years. Approximately 5,000,000 people face an increased cancer risk greater than 1-in-1 million due to inhalation exposure to actual HAP emissions from these source categories, and approximately 100,000 people face an increased risk greater than 10-in-1 million and up to 60-in-1 million. The agency estimates that the maximum chronic non-cancer TOSHI from inhalation exposure is 0.9 due to actual emissions of HCN from FCCU.

[39] 1-in-10 thousand is equivalent to 100-in-1 million. The EPA currently describes cancer risks as 'n-in-1 million'.

The screening assessment of worst-case acute inhalation impacts from actual emissions indicates the potential for five pollutants—nickel, arsenic, acrolein, benzene and acetaldehyde—to exceed an HQ value of 1, with an estimated worst-case maximum HQ of 5 for nickel based on the REL values. One hundred thirty-six of the 142 petroleum refineries had an estimated worst-case HQ less than or equal to 1 for all HAP. One facility had an estimated worst-case maximum HQ of 5 and the remaining five refineries with an HQ above 1 had an estimated worst-case HQ less than or equal to 3. Considering the conservative, health-protective nature of the approach that is used to develop these acute estimates, it is highly unlikely that an individual would have an acute exposure above the REL. Specifically, the analysis is based on the assumption that worst-case emissions and meteorology would coincide with a person being at this exact location for a period of time long enough to have an exposure level above the conservative REL value.

The Tier II multipathway screening analysis of actual emissions indicated the potential for PAH emissions that are about 30 times the screening level for cancer, dioxin and furans emissions that are about 40 times the cancer screening level and cadmium emissions that are about 2 times the screening level for non-cancer health effects. No facility's emissions were above the screening level for mercury. As we note above, the Tier II multipathway screen is conservative in that it incorporates many health-protective assumptions. For example, we choose inputs from the upper end of the range of possible values for the influential parameters used in the Tier II screen and we assume that the exposed individual exhibits ingestion behavior that would lead to a high total exposure. A Tier II exceedance cannot be equated with a risk value or a HQ or HI. Rather, it represents a high-end estimate of what the risk or hazard may be. For example, an exceedance of 2 for a non-carcinogen can be interpreted to mean that we have high confidence that the HI would be lower than 2. Similarly, an exceedance of 30 for a carcinogen means that we have high confidence that the risk is lower than 30-in-1-million. Our confidence comes from the conservative, or health-protective, assumptions that are used in the Tier II screen.

The refined analysis that we conducted for a specific facility showed that the Tier II screen for each pollutant over-predicted the potential risk when compared to the refined analysis results. That refined multipathway assessment showed that the Tier II screen resulted in estimated risks that are higher than the risks estimated by the refined analysis by 14 times for PAH, 3 times for dioxins and furans, and 3 times for cadmium. The refined assessment results indicate that the multipathway risks are considerably lower than the estimated inhalation risks, and our refined multipathway analysis indicates that multipathway risks are low enough that, while they are considered in our proposed decisions, they do not weigh heavily into those decisions because risks for the source category are driven by inhalation.

b. Estimated Risks From Allowable Emissions

We estimate that the baseline inhalation cancer risk to the individual most exposed to emissions from sources regulated by Refinery MACT 1 and 2 is as high as 100-in-1 million based on allowable emissions. The EPA estimates that the incidence of cancer due to inhalation exposures could be as high as 0.6 excess cancer cases per year, or 1 case approximately every 1.5 years. About 7,000,000 people face an increased cancer risk greater than 1-in-1 million due to inhalation exposure to allowable HAP emissions from these source categories, and greater than 90,000 people face an increased risk greater than 10-in-1 million, and as high as 100-in-1 million. Further, we estimate that the maximum chronic non-cancer TOSHI from inhalation exposure values at all refineries is less than 1 based on allowable emissions.

The baseline risks summarized above do not account for additional risk reductions that we anticipate due to the MACT standards or the technology review requirements we are proposing in this action.

c. Acceptability Determination

In determining whether risk is acceptable, the EPA considered all available health information and risk estimation uncertainty as described above. As noted above, the agency estimated risk from actual and allowable emissions. While there are uncertainties associated with both the actual and allowable emissions, we consider the allowable emissions to be an upper bound, based on the conservative methods we used to calculate allowable emissions.

The results indicate that both the actual and allowable inhalation cancer risks to the individual most exposed are no greater than approximately 100–in-1 million, which is the presumptive limit of acceptability. The MIR based on actual emissions is 60-in-1 million, approximately 60 percent of the presumptive limit. Based on the results of the refined site-specific multipathway analysis summarized above and described in section IV.C.3 of this preamble, we also conclude that the ingestion cancer risk to the individual most exposed is significantly less than 100-in-1 million. In addition, the maximum chronic non-cancer TOSHI due to inhalation exposures is less than 1, and our refined multipathway analysis indicates that non-cancer ingestion risks are estimated to be less than non-cancer risk from inhalation. Finally, the evaluation of acute non-cancer risks was very conservative, and showed acute risks below a level of concern.

In determining risk acceptability, we also evaluated population impacts because of the large number of people living near facilities in the source category. The analysis indicates that there are approximately 5 million people exposed to actual emissions resulting in a cancer risk greater than 1-in-1 million, and a substantially smaller number of people (100,000) are exposed to a cancer risk of greater than 10-in-1 million but less than 100-in-1 million (with a maximum risk of 60-in-1 million). The inhalation cancer incidence is approximately one case in every 3 years based on actual emissions. More detail on this risk analysis is presented in section IV.C and summarized in Tables 10 and 11 of this preamble. The results of the demographic analysis for petroleum refineries indicate that a greater proportion of certain minority groups and low-income populations live near refineries than the national demographic profile. More detail on these population impacts is presented in section IV.C.7 of this preamble. We did not identify any sensitivity to pollutants emitted from these source categories particular to minority and low income populations. Considering the above information, we propose that the risks remaining after implementation of the existing NESHAP for the Refinery MACT 1 and 2 source categories is acceptable.

We also note that the estimated baseline risks for the refineries source categories include risks from emissions from DCU, which are a previously unregulated emission source. As discussed in section IV.A. of this preamble, we are proposing new MACT standards for these sources that would reduce emissions of HAP by 850 tpy. We estimate that these new standards would not affect the MIR, but would

reduce the source category cancer incidence by 15 percent.

We solicit comment on all aspects of our proposed acceptability determination. We note that while we are proposing that the risks estimated from actual and allowable emissions are acceptable, the risks based on allowable emissions are at the presumptive limit of acceptable risk. Furthermore, a significant number of people live in relative proximity to refineries across the country, and therefore a large population is exposed to risks greater than 1-in-1 million. In particular, we solicit comment on the methodology used to estimate allowable emissions. As noted above, we consider the allowable emissions to be an upper bound estimate based on the conservative methods used to calculate such emissions. We recognize, however, that some of the health information concerning allowable emissions arguably borders on the edge of acceptability. Specifically, the analysis of allowable emissions resulted in a MIR of 100-in-1 million, which is the presumptive limit of acceptability, a large number of people (7,000,000) estimated to be exposed at a cancer risk above 1-in-1 million, and an estimated high cancer incidence (one case approximately every 1.5 years). Although we believe that our allowable emissions represent an upper end estimate, we nonetheless solicit comment on whether the health information currently before the Agency should be deemed unacceptable. We also solicit comment on whether our allowable emissions analysis reflects a reasonable estimate of emissions allowed under the current MACT standards. Lastly, we solicit comment on the acceptability of risk considering individuals' potential cumulative inhalation and ingestion pathway exposure. Please provide comments and data supporting your position. Such information will aid the Agency to make an informed decision on risk acceptability as it moves forward with this rulemaking.

2. Ample Margin of Safety

We next considered whether the existing MACT standards provide an ample margin of safety to protect public health. In addition to considering all of the health risks and other health information considered in the risk acceptability determination, in the ample margin of safety analysis we evaluated the cost and feasibility of available control technologies and other measures that could be applied in these source categories to further reduce the risks due to emissions of HAP. For purposes of the ample margin of safety analysis, we evaluated the changes in risk that would occur through adoption of a specific technology by looking at the changes to the risk due to actual emissions. Due to the nature of the allowable risk analysis, which is based on model plants and post processing to combine risk results,[40] we did not evaluate the risk reductions resulting from reducing allowable emissions at individual emission sources. Such an approach would require an unnecessarily complex analysis that would not provide any more useful information than the analysis we undertook using actual emissions. We note that while we did not conduct a specific analysis for allowable emissions, it is reasonable to expect reductions in risk similar to those for actual emissions.

As noted in our discussion of the technology review in section IV.B of this preamble, we identified a number of developments in practices, processes or control technologies for reducing HAP emissions from petroleum refinery processes. As part of the risk review, we evaluated these developments to determine if any of them could reduce risks and whether it is necessary to require any of these developments to provide an ample margin of safety to protect public health.

We evaluated the health information and control options for all of the emission sources located at refineries, including: Storage vessels, equipment leaks, gasoline loading racks, marine vessel loading operations, cooling towers/heat exchange systems, wastewater collection and treatment, FCCU, flares, miscellaneous process vents, CRU and SRU. For each of these sources, we considered chronic cancer and non-cancer risk metrics as well as acute risk. Regarding our ample margin of safety analyses for chronic non-cancer risk for the various emission sources, we note that the baseline TOSHIs are less than 1 for the entire source category and considerably less than 1 for all of the emission sources except for the FCCU (which had an TOSHI of 0.9). Therefore, we did not quantitatively evaluate reductions in the chronic non-cancer TOSHI for sources other than FCCU in the ample margin of safety analysis. Regarding our ample margin of safety analyses for acute risk for all of the various emission sources, we note that our analyses did not identify acute risks at a level of concern and, therefore, we did not quantitatively evaluate reductions in the acute HQ values for each individual emission source in the ample margin of safety analysis. Accordingly, the following paragraphs focus on cancer risk in the determination of whether the standards provide an ample margin of safety to protect public health.

For storage vessels, as discussed in section IV.B of this preamble, we identified and evaluated three control options. Under the technology review, we determined that two of the options, which we call options 1 and 2, are cost effective. We are proposing option 2, which includes all of the requirements of option 1, as part of the technology review. The option 2 controls that we are proposing under the technology review would result in approximately 910 tpy reduction in HAP (a 40-percent reduction from this emission source). As described in section IV.B of this preamble, not only are these controls cost effective, but we estimate a net cost savings because the emission reductions translate into reduced product loss. These controls would reduce the cancer risk to the individual most exposed from 60-in-1 million to 50-in-1 million based on actual emissions at the facility where storage tank emissions were driving the risk. However, the MIR remains unchanged for the refinery source categories, at 60-in 1-million, because the facility with the next highest cancer risk is 60-in-1 million and this risk is driven by another emission source. The option 2 controls also would reduce cancer incidence by approximately 2 percent. Finally, we estimate that the option 2 controls reduce the number of people with a cancer risk greater than 10-in-1 million storage tanks from 3,000 to 60 and reduce the number of people with a cancer risk greater than 1-in-1 million from storage tanks from 140,000 to 72,000. Since these controls reduce cancer incidence, and reduce the number of people exposed to cancer risks greater than 1-in-10 million and 1-in-1 million from storage tank emissions, and are cost effective, we propose that these controls are necessary to provide an ample margin of safety to protect public health. We also evaluated one additional control option for storage vessels, option 3, which incorporated both options 1 and 2 along with additional monitoring requirements. We estimate incremental HAP emission reductions (beyond those provided by option 2) of 90 tpy. The

[40] As described in the memorandum entitled *Refinery Emissions and Risk Estimates for Modeled "Allowable" Emissions,* available in Docket EPA–HQ–OAR–2010–0682, the use of model plants and post-processing was for the purpose of ensuring that our analysis would provide a conservative estimate of actual emissions and thus a conservative estimate of risk.

incremental cost effectiveness for option 3 exceeds $60,000 per ton, which we do not consider cost effective. In addition, the option 3 controls do not result in quantifiable reductions in the cancer risk to the individual most exposed or the cancer incidence beyond the reductions estimated for the option 2 controls. For these reasons, we propose that it is not necessary to require the option 3 controls in order to provide an ample margin of safety to protect public health.

For equipment leaks, we identified and evaluated three control options discussed previously in the technology review section of this preamble (section IV.B). These options are:

- Option 1—monitoring and repair at lower leak definitions;
- Option 2—applying monitoring and repair requirements to connectors; and
- Option 3—optical gas imaging and repair.

We estimate that these three independent control options reduce industry-wide emissions of organic HAP by 24 tpy, 86 tpy, and 24 tpy, respectively. We estimate that none of the control options would reduce the risk to the individual most exposed. We also estimate that the cancer incidence would not change perceptively if these controls were required. Finally, we estimate that the control options do not reduce the number of people with a cancer risk greater than 10-in-1 million or the number of people with a cancer risk greater than 1-in-1 million. As discussed above, the available control options for equipment leaks do not provide quantifiable risk reductions and, therefore, we propose that these controls are not necessary to provide an ample margin of safety.

For gasoline loading racks, we identified and evaluated one control option discussed previously in the technology review section of this preamble (section IV.B). As discussed earlier, this option is a new development that results in emissions that are higher than the current level required under Refinery MACT 1. Since we estimate that no emission reductions would result from this new technology and thus no reduction in risk, we propose that this control option is not necessary to provide an ample margin of safety.

For marine vessel loading operations, we identified and evaluated two control options discussed previously in the technology review section of this preamble (section IV.B). The first option would be to require submerged fill for small and offshore marine vessel loading operations. Based on actual emissions, we project no HAP emission reductions for this option, as all marine vessels that are used to transport bulk refinery liquids are expected to already have the required submerged fill pipes. Accordingly, we do not project any changes in risk. While we are proposing this option under the technology review, because the option is not projected to reduce emissions or risk, we propose that a submerged loading requirement is not necessary to provide an ample margin of safety. We also identified and evaluated the use of add-on controls for gasoline loading at small marine vessel loading operations. In the technology review, we rejected this control option because the cost effectiveness exceeded $70,000 ton of HAP reduced. We estimate that this option would not result in quantifiable changes to any of the risk metrics. Because add-on controls would not result in quantifiable risk reductions and we do not consider the controls to be cost effective, we are proposing that add-on controls for gasoline loading at small marine vessel loading operations are not necessary to provide an ample margin of safety.

For cooling towers and heat exchangers, we did not identify as part of our technology review any developments in processes, practices or controls beyond those that we considered in our beyond-the-floor analysis at the time we set the MACT standards. We note that we issued MACT standards for heat exchange systems in a final rule on October 28, 2009 (74 FR 55686), but existing sources were not required to comply until October 29, 2012. As a result, the reductions were not reflected in the inventories submitted in response to the ICR for refineries and therefore were not included in our risk analysis based on actual emissions. We estimate that these MACT standards will result in an industry-wide reduction of over 600 tons HAP per year (or 85 percent). The projected contribution to risk associated with cooling tower emissions after implementation of these MACT standards for heat exchange systems is approximately 1 percent. Because we did not identify any control options beyond those required by the current standards for cooling towers and heat exchange systems, we are proposing that additional controls for these systems are not necessary to provide an ample margin of safety.

For wastewater collection and treatment systems, we identified and evaluated three options for reducing emissions. We estimate implementing these independent control options would result in emission reductions of 158 tpy (4 percent), 549 tpy (15 percent), and 929 tpy (25 percent), respectively. None of the control options would reduce the cancer risk to the individual most exposed from 60-in-1 million. Option 1 would reduce the cancer incidence by less than 1 percent, and we expect any reduction in cancer incidence that would result from options 2 or 3 to be small because this source accounts for about 10 percent of the cancer incidence from refineries as a whole and the most stringent control option would reduce emissions from these source by only 25 percent. Finally, we estimate that control option 1 would not reduce the number of people with a cancer risk greater than 10-in-1 million or the number of people with a cancer risk greater than 1-in-1 million. We expect any changes to the number of people with a cancer risk greater than 1-in-1 million from implementation of options 2 or 3 to be small for the same reasons mentioned above for cancer incidence. We estimate the cost effectiveness of these options to be $26,600 per ton, $52,100 per ton, and $54,500 per ton of organic HAP reduced, and we do not consider any of these options to be cost effective. Because of the very small reductions in risk and the lack of cost-effective control options, we propose that these controls are not necessary to provide an ample margin of safety.

For FCCU, we did not identify any developments in processes, practices or control technologies for organic HAP. For inorganic HAP from FCCU, in the technology review, we identified and evaluated one control option for an HCN emissions limit and one control option for a PM emissions limit. The PM limit was adopted for new sources in Refinery NSPS Ja as part of our review of Refinery NSPS J. We considered the costs and emission reductions associated with requiring existing sources to meet the new source level for PM under Refinery NSPS Ja (*i.e.,* 0.5 g PM/kg of coke burn-off rather than 1.0 g PM/kg). As indicated in our promulgation of Refinery NSPS Ja, the cost effectiveness of lowering the PM limit for existing sources to the level we are requiring for new sources was projected to be $21,000 per ton of PM reduced (see 73 FR 35845, June 24, 2008). Based on the typical metal HAP concentration in PM from FCCU, the cost effectiveness of this option for HAP metals is approximately $1 million per ton of HAP reduced. We estimate that this control option would not reduce the cancer risk to the individual most exposed, would not change the cancer incidence, and would not change the number of people with estimated cancer

risk greater than 1-in-1 million or 10-in-1 million. For the HCN emissions limit, we evaluated the costs of controlling HCN using combustion controls in combination with SCR. The cost effectiveness of this option was approximately $9,000 per ton of HCN. This control option would reduce the non-cancer HI from 0.9 to 0.8 and would not change any of the cancer risk metrics. Based on the cost effectiveness of these options and the limited reduction in cancer and non-cancer risk (the non-cancer risk is below a level of concern based on the existing standards), we propose that additional controls for FCCU are not necessary to provide an ample margin of safety.

Flares are used as APCD to control emissions from several emission sources covered by Refinery MACT 1 and 2. In this proposed rule, under CAA sections 112(d)(2) and (3), we are proposing operating and monitoring requirements to ensure flares achieve the 98-percent HAP destruction efficiency identified as the MACT Floor in the initial MACT rulemaking in 1995. Flares are critical safety devices that effectively reduce emissions during startup, shutdown, and process upsets or malfunctions. In most cases, flares are the only means by which emissions from pressure relief devices can be controlled. Thus, we find that properly-functioning flares act to reduce HAP emissions, and thereby risk, from petroleum refinery operations. The changes to the flare requirements that we are proposing under CAA sections 112(d)(2) and (3) will result in sources meeting the level required by the original standards, and we did not identify any control options that would further reduce the HAP emissions from flares. Therefore, we are proposing that additional controls for flares are not necessary to provide an ample margin of safety.

For the remaining emission sources within the Refinery MACT 1 and Refinery MACT 2 source categories, including miscellaneous process vents, CRU, and SRU, we did not identify any developments in processes practices and control technologies. Therefore, we are proposing that additional controls for these three Refinery MACT 1 and 2 emission sources are not necessary to provide an ample margin of safety.

In summary, we propose that the original Refinery MACT 1 and 2 MACT standards, along with the proposed requirements for storage vessels described above, provide an ample margin of safety to protect public health. We are specifically requesting comment on whether there are additional control measures for emission sources subject to Refinery MACT 1 and Refinery MACT 2 that are necessary to provide an ample margin of safety to protect public health. In particular, we are requesting that states identify any controls they have already required for these facilities, controls they are currently considering, or other controls of which they may be aware.

While not part of our decisions regarding residual risk, we note that DCU are an important emission source with respect to risk from refineries. As described in section IV.A of this preamble, we are proposing new MACT standards under CAA sections 112(d)(2) and (3) for DCU. For informational purposes, we also looked at the risk reductions that would result from implementation of those standards. We estimate no reduction in the cancer risk to the individual most exposed and a decrease in cancer incidence of 0.05 cases per year, or approximately 15 percent. While our decisions on risk acceptability and ample margin of safety are supported even in the absence of these reductions, if we finalize the proposed requirements for DCU, they would further strengthen our conclusions that the standards provide an ample margin of safety to protect public health.

3. Adverse Environmental Effects

We conducted an environmental risk screening assessment for the petroleum refineries source category for lead, mercury, cadmium, PAH, dioxins and furans, HF, and HCl. For mercury, cadmium, PAH, and dioxins and furans, none of the individual modeled concentrations for any facility in the source category exceeded any of the Tier II ecological benchmarks (either the LOAEL or NOAEL). For lead, we did not estimate any exceedances of the secondary lead NAAQS. For HF and HCl, the average modeled concentration around each facility (*i.e.,* the average concentration of all off-site data points in the modeling domain) did not exceed any ecological benchmark. Based on these results, EPA proposes that it is not necessary to set a more stringent standard to prevent, taking into consideration costs, energy, safety, and other relevant factors, an adverse environmental effect.

E. What other actions are we proposing?

We are proposing the following changes to Refinery MACT 1 and 2 as described below: (1) Revising the SSM provisions in order to ensure that the subparts are consistent with the court decision in *Sierra Club* v. *EPA,* 551 F. 3d 1019 (D.C. Cir. 2008), which vacated two provisions that exempted sources from the requirement to comply with otherwise applicable section 112(d) emission standards during periods of SSM; (2) proposing to clarify requirements related to open-ended valves or lines; (3) adding electronic reporting requirements in Refinery MACT 1 and 2; and (4) updating the General Provisions cross-reference tables.

1. SSM

In its 2008 decision in *Sierra Club* v. *EPA*, 551 F.3d 1019 (D.C. Cir. 2008), the United States Court of Appeals for the District of Columbia Circuit vacated portions of two provisions in the EPA's CAA section 112 regulations governing the emissions of HAP during periods of SSM. Specifically, the Court vacated the SSM exemption contained in 40 CFR 63.6(f)(1) and 40 CFR 63.6(h)(1), holding that under section 302(k) of the CAA, emissions standards or limitations must be continuous in nature and that the SSM exemption violates the CAA's requirement that some section 112 standards apply continuously.

We are proposing the elimination of the SSM exemption in 40 CFR part 63, subparts CC and UUU. Consistent with *Sierra Club* v. *EPA,* we are proposing standards in these rules that apply at all times. We are also proposing several revisions to Table 6 of subpart CC of 40 CFR part 63 and to Table 44 to subpart UUU of 40 CFR part 63 (the General Provisions Applicability tables for each subpart) as explained in more detail below. For example, we are proposing to eliminate the incorporation of the General Provisions' requirement that the source develop an SSM plan. We also are proposing to eliminate and revise certain recordkeeping and reporting requirements related to the SSM exemption as further described below.

The EPA has attempted to ensure that the provisions we are proposing to eliminate are inappropriate, unnecessary, or redundant in the absence of the SSM exemption. We are specifically seeking comment on whether we have successfully done so.

In proposing the standards in this rule, the EPA has taken into account startup and shutdown periods and, for the reasons explained below, we are proposing alternate standards for those periods for a few select emission sources. We expect facilities can meet nearly all of the emission standards in Refinery MACT 1 and 2 during startup and shutdown, including the amendments we are proposing in this action. For most of the emission sources, APCD are operating prior to process startup and continue to operate through process shutdown.

For Refinery MACT 1 and 2, we identified three emission sources for which specific startup and shutdown provisions may be needed. First, as noted above, most APCD used to control metal HAP emissions from FCCU under Refinery MACT 2 (*e.g.,* wet scrubber, fabric filter, cyclone) would be operating before emissions are routed to them and would be operating during startup and shutdown events in a manner consistent with normal operating periods, such that the monitoring parameter operating limits set during the performance test are maintained and met. However, we recognize that there are safety concerns associated with operating an ESP during startup of the FCCU, as described in the following paragraphs. Therefore, we are proposing specific PM standards for startup of FCCU controlled with an ESP under Refinery MACT 2.

During startup of the FCCU, ''torch oil'' (heavy oil typically used as feed to the unit via the riser) is injected directly into the regenerator and burned to raise the temperature of the regenerator and catalyst to levels needed for normal operation. Given the poor mixing of fuel and air in the regenerator during this initial startup, it is difficult to maintain optimal combustion characteristics, and high CO concentrations are common. Elevated CO levels pose an explosion threat due to the high electric current and potential for sparks within the ESP. Consequently, it is common practice to bypass the ESP during startup of the FCCU. Once torch oil is shut off and the regenerator is fueled by catalyst coke burn-off, the CO levels in the FCCU regenerator off-gas will stabilize and the gas can be sent to the ESP safely.

When the ESP is offline, the operating limits for the ESP are meaningless. During much of the startup process, either catalyst is not circulating between the FCCU regenerator and reactor or the catalyst circulation rate is much lower than during normal operations. While the catalyst is not circulating or is circulating at reduced rates, the PM and metal HAP emissions are expected to be much lower than during normal operations. Therefore, the cyclone separators that are internal to the FCCU regenerator should provide reasonable PM control during this initial startup. To ensure the internal cyclones are operating efficiently, we are proposing that FCCU using an ESP as the APCD meet a 30-percent opacity limit (on a 6-minute rolling average basis) during the period that torch oil is used during FCCU startup. This opacity limit was selected because it has been used historically to assess compliance with the PM emission limit for FCCU in Refinery NSPS J and because the emission limit can be assessed using manual opacity readings, eliminating the need to install a COMS. We note that Refinery NSPS J includes the exception for one 6-minute average of up to 60-percent opacity in a 1-hour period primarily to accommodate soot blowing events. As no soot blowing should be performed prior to the ESP coming on-line, we are not including this exception to the proposed 30-percent opacity limit during startup for FCCU that are controlled by an ESP.

Second, for emissions of organic HAP from FCCU under Refinery MACT 2, we also expect that APCD would be operating before emissions are routed to them, and would be operating during startup and shutdown events in a manner consistent with normal operating periods, such that the monitoring parameter operating limits set during the performance test are maintained and met. However, many FCCU operate in ''complete combustion'' mode without a post-combustion device. In other words, for FCCU without a post-combustion device, organic HAP are controlled by the FCCU itself, so there is no separate APCD that could be operating during startup and demonstrating continuous compliance with the monitoring parameter operating limits. Therefore, we are proposing specific CO standards for startup of FCCU without a post-combustion device under Refinery MACT 2.

As mentioned previously, ''torch oil'' is injected directly into the regenerator and burned during FCCU startup to raise the temperature of the regenerator and catalyst to levels needed for normal operation. During this period, CO concentrations often will exceed the 500 ppm emissions limit due to the poor mixing of fuel and air in the regenerator. The emissions limit is based on CO emissions, as a surrogate for organic HAP emissions, and the emission limit is evaluated using a 1-hour averaging period. This 1-hour averaging period does not provide adequate time for short-term excursions that occur during startup to be offset by lower emissions during normal operational periods.

Based on available data during normal operations, ensuring adequate combustion (indicated by CO concentration levels below 500 ppmv) minimizes organic HAP emissions. Low levels of CO in the exhaust gas are consistently achieved during normal operations when oxygen concentrations in the exhaust gas exceed 1-percent by volume (dry basis). Thus, maintaining an adequate level of excess oxygen for the combustion of fuel in the FCCU is expected to minimize organic HAP emissions. Emissions of CO during startup result from a series of reactions with the fuel source and are dependent on mixing, local oxygen concentrations, and temperature. While the refinery owner or operator has direct control over air blast rates, CO emissions may not always directly correlate with the air blast rate. Exhaust oxygen concentrations are expected to be more directly linked with air blast rates and are, therefore, more directly under control of the refinery owner or operator. We are proposing an excess oxygen concentration of 1 volume percent (dry basis) based on a 1-hour average during startup. We consider the 1-hour averaging period for the oxygen concentration in the exhaust gas from the FCCU to be appropriate during periods of FCCU startup because air blast rates can be directly controlled to ensure adequate oxygen supply on a short-term basis.

Third, we note that the SRU is unique in that it essentially is the APCD for the fuel gas system at the facility. The SRU would be operating if the refinery is operating, including during startup and shutdown events. There are typically multiple SRU trains at a facility. Different trains can be taken off-line as sour gas production decreases to maintain optimal operating characteristics of the operating SRU during startup or shutdown of a set of process units. Thus, the sulfur recovery plant is expected to run continuously and would only shut down its operation during a complete turnaround or shutdown of the facility. For these limited situations, the 12-hour averaging time provided for the SRU emissions limitation under Refinery MACT 2 may not be adequate time in which to shut down the unit without exceeding the emissions limitation. Therefore, we are proposing specific standards for SRU during periods of shutdown.

We note also that, for SRU subject to Refinery NSPS J or electing to comply with Refinery NSPS J as provided in Refinery MACT 2, the emissions limit is in terms of SO_2 concentration for SRU with oxidative control systems or reductive control systems followed by an incinerator. While the SO_2 concentration limit provides a reasonable proxy of the reduced sulfur HAP emissions during normal operations, it does not necessarily provide a good indication of reduced sulfur HAP emissions during periods of shutdown. During periods of shutdown, the sulfur remaining in the unit is purged and combusted generally in a thermal oxidizer or a flare. Although the sulfur loading to the thermal oxidizer

during shutdown may be higher than during normal operations (thereby causing an increase in the SO_2 concentration and exceedance of the SO_2 emissions limitation), appropriate operation of the thermal oxidizer will adequately control emissions of reduced sulfur HAP. Thus, during periods of shutdown, the 300 ppmv reduced sulfur compound emission limit alternative (provided for SRU not subject to Refinery NSPS J) is a better indicator of reduced sulfur HAP emissions. In Refinery MACT 2, SRU that elect to comply with the 300 ppmv reduced sulfur compound emission limit (*i.e.,* those not subject to Refinery NSPS J or electing to comply with Refinery NSPS J) and that use a thermal incinerator for sulfur HAP control are required to maintain a minimum temperature and excess oxygen level (as determined through a source test of the unit) to demonstrate compliance with the reduced sulfur compound emission limitation.

In Refinery MACT 2, SRU subject to Refinery NSPS J (or that elect to comply with Refinery NSPS J) that use an incinerator to control sulfur HAP emissions are required to install an SO_2 CEMS to demonstrate compliance with the SO_2 emission limitation. For these units, it is impractical to require installation of a reduced sulfur compound monitor or to require a source test to establish operating parameters during shutdown of the SRU because of the few hours per year that the entire series of SRU trains are shutdown. Although the autoignition temperature of COS is unknown, based on the autoignition temperature of CS_2 (between 200 and 250 °F) and the typical operating characteristics of thermal oxidizers used to control emissions from SRU, we are proposing that, for periods of SRU shutdown, diverting the purge gases to a flare meeting the design and operating requirements in 40 CFR 63.670 (or, for a limited transitional time period, 40 CFR 63.11) or to a thermal oxidizer operated at a minimum temperature of 1200 °F and a minimum outlet oxygen concentration of 2 volume percent (dry basis). We believe that this provides adequate assurance of compliance with the 300 ppmv reduced sulfur compound emission limitation for SRU because incineration at these temperatures was determined to be the MACT floor in cases where no tail gas treatment units were used (*i.e.,* units not subject to Refinery NSPS J).

For all other emission sources, we believe that the requirements that apply during normal operations should apply during startup and shutdown. For Refinery MACT 1, these emission sources include process vents, transfer operations, storage tanks, equipment leaks, heat exchange systems, and wastewater. Emission reductions for process vents and transfer operations, such as gasoline loading racks and marine tank vessel loading, are typically achieved by routing vapors to thermal oxidizers, carbon adsorbers, absorbers and flares. It is common practice to start an APCD prior to startup of the emissions source it is controlling, so the APCD would be operating before emissions are routed to it. We expect APCD would be operating during startup and shutdown events in a manner consistent with normal operating periods, and that these APCD will be operated to maintain and meet the monitoring parameter operating limits set during the performance test. We do not expect startup and shutdown events to affect emissions from equipment leaks, heat exchange systems, wastewater, or storage tanks. Leak detection programs associated with equipment leaks and heat exchange systems are in place to detect leaks, and, therefore, it is inconsequential whether the process is operating under normal operating conditions or is in startup or shutdown. Wastewater emissions are also not expected to be significantly affected by startup or shutdown events because the control systems used can operate while the wastewater treatment system is in startup or shutdown. Working and breathing losses from storage tanks are the same regardless of whether the process is operating under normal operating conditions or if it is in a startup or shutdown event. Degassing of a storage tank is common for shutdown of a process; the residual emissions in a storage tank are vented as part of the cleaning of the storage tank. We evaluated degassing controls as a control alternative for storage vessels and do not consider these controls to be cost effective (see memorandum *Survey of Control Technology for Storage Vessels and Analysis of Impacts for Storage Vessel Control Options,* Docket Item Number EPA–HQ–OAR–2010–0871–0027). Based on this review, we are not proposing specific standards for storage vessels during startup or shutdown.

Periods of startup, normal operations, and shutdown are all predictable and routine aspects of a source's operations. However, by contrast, malfunction is defined as a sudden, infrequent, and not reasonably preventable failure of air pollution control and monitoring equipment, process equipment or a process to operate in a normal or usual manner (see 40 CFR 63.2). The EPA has determined that CAA section 112 does not require that emissions that occur during periods of malfunction be factored into development of section 112 standards. Under section 112, emissions standards for new sources must be no less stringent than the level ''achieved'' by the best-controlled similar source and for existing sources generally must be no less stringent than the average emission limitation ''achieved'' by the best-performing 12 percent of sources in the category. There is nothing in section 112 that directs the EPA to consider malfunctions in determining the level ''achieved'' by the best-performing sources when setting emission standards. As the D.C. Circuit has recognized, the phrase ''average emissions limitation achieved by the best performing 12 percent of'' sources ''says nothing about how the performance of the best units is to be calculated.'' *Nat'l Ass'n of Clean Water Agencies* v. *EPA,* 734 F.3d 1115, 1141 (D.C. Cir. 2013). While the EPA accounts for variability in setting emissions standards, nothing in section 112 requires the EPA to consider malfunctions as part of that analysis. A malfunction should not be treated in the same manner as the type of variation in performance that occurs *during routine operations of a source.* A malfunction is a failure of the source to perform in a ''normal or usual manner'' and no statutory language compels EPA to consider such events in setting standards based on ''best performers.''

Further, accounting for malfunctions in setting emissions standards would be difficult, if not impossible, given the myriad different types of malfunctions that can occur across all sources in the category, and given the difficulties associated with predicting or accounting for the frequency, degree, and duration of various malfunctions that might occur. As such, the performance of units that are malfunctioning is not ''reasonably'' foreseeable. *See, e.g., Sierra Club* v. *EPA,* 167 F. 3d 658, 662 (D.C. Cir. 1999) (the EPA typically has wide latitude in determining the extent of data-gathering necessary to solve a problem. We generally defer to an agency's decision to proceed on the basis of imperfect scientific information, rather than to ''invest the resources to conduct the perfect study.''). *See also, Weyerhaeuser* v. *Costle,* 590 F.2d 1011, 1058 (D.C. Cir. 1978) (''In the nature of things, no general limit, individual permit, or even any upset provision can anticipate all upset situations. After a certain point, the transgression of regulatory limits caused by

'uncontrollable acts of third parties,' such as strikes, sabotage, operator intoxication or insanity, and a variety of other eventualities, must be a matter for the administrative exercise of case-by-case enforcement discretion, not for specification in advance by regulation.''). In addition, emissions during a malfunction event can be significantly higher than emissions at any other time of source operation, and thus, accounting for malfunctions in setting standards could lead to standards that are significantly less stringent than levels that are achieved by a well-performing non-malfunctioning source. It is reasonable to interpret section 112 to avoid such a result. The EPA's approach to malfunctions is consistent with CAA section 112 and is a reasonable interpretation of the statute.

In the event that a source fails to comply with the applicable CAA section 112(d) standards as a result of a malfunction event, the EPA would determine an appropriate response based on, among other things, the good-faith efforts of the source to minimize emissions during malfunction periods, including preventative and corrective actions, as well as root cause analyses to ascertain and rectify excess emissions. The EPA would also consider whether the source's failure to comply with the CAA section 112(d) standard was, in fact, sudden, infrequent, not reasonably preventable and was not instead caused in part by poor maintenance or careless operation, as described in the definition of malfunction (see 40 CFR 63.2). Further, to the extent the EPA files an enforcement action against a source for violation of an emission standard, the source can raise any and all defenses in that enforcement action and the federal district court will determine what, if any, relief is appropriate. The same is true for citizen enforcement actions. Similarly, the presiding officer in an administrative proceeding can consider any defense raised and determine whether administrative penalties are appropriate.

In several prior rules, the EPA had included an affirmative defense to civil penalties for violations caused by malfunctions in an effort to create a system that incorporates some flexibility, recognizing that there is a tension, inherent in many types of air regulation, to ensure adequate compliance while simultaneously recognizing that despite the most diligent of efforts, emission standards may be violated under circumstances entirely beyond the control of the source. Although the EPA recognized that its case-by-case enforcement discretion provides sufficient flexibility in these circumstances, it included the affirmative defense to provide a more formalized approach and more regulatory clarity. *See Weyerhaeuser Co.* v. *Costle,* 590 F.2d 1011, 1057–58 (D.C. Cir. 1978) (holding that an informal case-by-case enforcement discretion approach is adequate); *but see Marathon Oil Co.* v. *EPA,* 564 F.2d 1253, 1272–73 (9th Cir. 1977) (requiring a more formalized approach to consideration of ''upsets beyond the control of the permit holder.''). Under the EPA's regulatory affirmative defense provisions, if a source could demonstrate in a judicial or administrative proceeding that it had met the requirements of the affirmative defense in the regulation, civil penalties would not be assessed. Recently, the United States Court of Appeals for the District of Columbia Circuit vacated such an affirmative defense in one of the EPA's section 112(d) regulations. *NRDC* v. *EPA,* No. 10–1371 (D.C. Cir. April 18, 2014) 2014 U.S. App. LEXIS 7281 (vacating affirmative defense provisions in section 112(d) rule establishing emission standards for Portland cement kilns). The court found that the EPA lacked authority to establish an affirmative defense for private civil suits and held that under the CAA, the authority to determine civil penalty amounts lies exclusively with the courts, not the EPA. Specifically, the Court found: ''As the language of the statute makes clear, the courts determine, on a case-by-case basis, whether civil penalties are 'appropriate.' '' *See NRDC,* 2014 U.S. App. LEXIS 7281 at *21 (''[U]nder this statute, deciding whether penalties are 'appropriate' in a given private civil suit is a job for the courts, not EPA.'').[41] In light of *NRDC,* the EPA is not including a regulatory affirmative defense provision in this rulemaking. As explained above, if a source is unable to comply with emissions standards as a result of a malfunction, the EPA may use its case-by-case enforcement discretion to provide flexibility, as appropriate. Further, as the D.C. Circuit recognized, in an EPA or citizen enforcement action, the court has the discretion to consider any defense raised and determine whether penalties are appropriate. *Cf. NRDC,* 2014 U.S. App. LEXIS 7281 *at *24.* (arguments that violation were caused by unavoidable technology failure can be made to the courts in future civil cases when the issue arises). The same logic applies to EPA administrative enforcement actions.

a. General Duty

We are proposing to revise the 40 CFR part 63, subpart CC General Provisions table (Table 6) entry for 63.6(e)(1)(i) by changing the ''Yes'' in the second column to a ''No.'' Similarly, we are proposing to revise the 40 CFR part 63, subpart UUU General Provisions table (Table 44) entry for § 63.6(e)(1)(i) by changing the ''Yes'' in the third column to a ''No.'' We are making this change because section 63.6(e)(1)(i) describes the general duty to minimize emissions and the current characterizes what the general duty entails during periods of SSM and that language is no longer necessary or appropriate in light of the elimination of the SSM exemption. We are proposing instead to add general duty regulatory text at 40 CFR 63.642(n) and 40 CFR 63.1570(c) that reflects the general duty to minimize emissions while eliminating the reference to periods covered by an SSM exemption. With the elimination of the SSM exemption, there is no need to differentiate between normal operations, startup and shutdown, and malfunction events in describing the general duty. Therefore the language the EPA is proposing does not include that language from 40 CFR 63.6(e)(1).

We are also proposing to revise the 40 CFR part 63, subpart CC General Provisions table (Table 6) entry for 63.6(e)(1)(ii) by changing the ''Yes'' in the second column to a ''No.'' Similarly, we are also proposing to revise the 40 CFR part 63, subpart UUU General Provisions table (Table 44) entry for § 63.6(e)(1)(ii) by changing the ''Yes'' in the third column to a ''No.'' Section 63.6(e)(1)(ii) imposes requirements that are not necessary with the elimination of the SSM exemption or are redundant of the general duty requirement being added at 40 CFR 63.642(n) and 40 CFR 63.1570(c).

b. SSM Plan

We are proposing to revise the 40 CFR part 63, subpart CC General Provisions table (Table 6) entries for 63.6(e)(3)(i) and 63.6(e)(3)(iii)–63.6(e)(3)(ix) by changing the ''Yes'' in the second column to a ''No.'' Similarly, we are proposing to revise the 40 CFR part 63, subpart UUU General Provisions table (Table 44) entries for § 63.6(e)(3)(i)–(iii), § 63.6(e)(3)(iv), § 63.6(e)(3)(v)–(viii), § 63.6(e)(3)(ix) to be entries for 63.6(e)(3)(i) and 63.6(e)(3)(iii)–63.6(e)(3)(ix) with ''No'' in the third column and § 63.6(e)(3)(ii) with ''Not

[41] The court's reasoning in *NRDC* focuses on civil judicial actions. The Court noted that ''EPA's ability to determine whether penalties should be assessed for Clean Air Act violations extends only to administrative penalties, not to civil penalties imposed by a court.'' *Id.*

Applicable'' in the third column (that section is reserved). Generally, these paragraphs require development of an SSM plan and specify SSM recordkeeping and reporting requirements related to the SSM plan. As noted, the EPA is proposing to remove the SSM exemptions. Therefore, affected units will be subject to an emission standard during such events. The applicability of a standard during such events will ensure that sources have ample incentive to plan for and achieve compliance and thus the SSM plan requirements are no longer necessary.

c. Compliance With Standards

We are proposing to revise the 40 CFR part 63, subpart CC General Provisions table (Table 6) entry for 63.6(f)(1) by changing the ''Yes'' in the second column to a ''No.'' Similarly, we are proposing to revise the 40 CFR part 63, subpart UUU General Provisions table (Table 44) entry for § 63.6(f)(1) by changing the ''Yes'' in the third column to a ''No.'' The current language of 40 CFR 63.6(f)(1) exempts sources from non-opacity standards during periods of SSM. As discussed above, the court in *Sierra Club* vacated the exemptions contained in this provision and held that the CAA requires that some section 112 standard apply continuously. Consistent with *Sierra Club,* the EPA is proposing to revise standards in this rule to apply at all times.

We are proposing to revise the 40 CFR part 63, subpart CC General Provisions table (Table 6) entry for 63.6(h)(1) by changing the ''Yes'' in the second column to a ''No.'' Similarly, we are proposing to revise the 40 CFR part 63, subpart UUU General Provisions table (Table 44) entry for § 63.6(h)(1) by changing the ''Yes'' in the third column to a ''No.'' The current language of 40 CFR 63.6(h)(1) exempts sources from opacity standards during periods of SSM. As discussed above, the court in *Sierra Club* vacated the exemptions contained in this provision and held that the CAA requires that some section 112 standard apply continuously. Consistent with *Sierra Club,* the EPA is proposing to revise standards in this rule to apply at all times.

d. Performance Testing

We are proposing to revise the 40 CFR part 63, subpart CC General Provisions table (Table 6) entry for 63.7(e)(1) by changing the ''Yes'' in the second column to a ''No.'' Similarly, we are proposing to revise the 40 CFR part 63, subpart UUU General Provisions table (Table 44) entry for § 63.7(e)(1) by changing the ''Yes'' in the third column to a ''No.'' Section 63.7(e)(1) describes performance testing requirements. The EPA is instead proposing to add performance testing requirements at 40 CFR 63.642(d)(3) and 40 CFR 63.1571(b)(1). The performance testing requirements we are proposing differ from the General Provisions performance testing provisions in several respects. The regulatory text does not include the language in 40 CFR 63.7(e)(1) that restated the SSM exemption. The regulatory text also does not preclude startup and shutdown periods from being considered ''representative'' for purposes of performance testing, however, the testing. However, the specific testing provisions proposed at 40 CFR 63.642(d)(3) and 40 CFR 63.1571(b)(1) do not allow performance testing during startup or shutdown. As in 40 CFR 63.7(e)(1), performance tests conducted under this subpart may not be conducted during malfunctions because conditions during malfunctions are often not representative of normal operating conditions. The EPA is proposing to add language that requires the owner or operator to record the process information that is necessary to document operating conditions during the test and include in such record an explanation to support that such conditions represent normal operation. Section 63.7(e) requires that the owner or operator make available to the Administrator such records ''as may be necessary to determine the condition of the performance test'' available to the Administrator upon request, but does not specifically require the information to be recorded. The regulatory text EPA is proposing to add to Refinery MACT 1 and 2 builds on that requirement and makes explicit the requirement to record the information.

e. Monitoring

We are proposing to revise the 40 CFR part 63, subpart CC General Provisions table (Table 6) entries for 63.8(c)(1)(i) and 63.8(c)(1)(iii) by changing the ''Yes'' in the second column to a ''No.'' Similarly, we are proposing to revise the 40 CFR part 63, subpart UUU General Provisions table (Table 44) entry for § 63.8(c)(1)(i) and § 63.8(c)(1)(iii) by changing the ''Yes'' in the third column to a ''No.'' The cross-references to the general duty and SSM plan requirements in those subparagraphs are not necessary in light of other requirements of 40 CFR 63.8 that require good air pollution control practices (40 CFR 63.8(c)(1)) and that set out the requirements of a quality control program for monitoring equipment (40 CFR 63.8(d)).

We are proposing to revise the 40 CFR part 63, subpart UUU General Provisions table (Table 44) entry for § 63.8(d) to include separate entries for specific paragraphs of 40 CFR 63.8(d), including an entry for § 63.10(d)(3) with ''No'' in the third column. The final sentence in 40 CFR 63.8(d)(3) refers to the General Provisions' SSM plan requirement which is no longer applicable. The EPA is proposing to add to the rule at 40 CFR 63.1576(b)(3) text that is identical to 40 CFR 63.8(d)(3) except that the final sentence is replaced with the following sentence: ''The program of corrective action should be included in the plan required under § 63.8(d)(2).''

f. Recordkeeping

We are proposing to revise the 40 CFR part 63, subpart CC General Provisions table (Table 6) entry for 63.10(b)(2)(i) by changing the ''Yes'' in the second column to a ''No.'' Section 63.10(b)(2)(i) describes the recordkeeping requirements during startup and shutdown. These recording provisions are no longer necessary because the EPA is proposing that recordkeeping and reporting applicable to normal operations will apply to startup and shutdown. In the absence of special provisions applicable to startup and shutdown, such as a startup and shutdown plan, there is no reason to retain additional recordkeeping for startup and shutdown periods.

We are proposing to revise the 40 CFR part 63, subpart UUU General Provisions table (Table 44) entry for § 63.10(b) to include separate entries for specific paragraphs of 40 CFR 63.10(b), including an entry for § 63.10(b)(2)(i) with ''No'' in the third column. Section 63.10(b)(2)(i) describes the recordkeeping requirements during startup and shutdown. We are instead proposing to add recordkeeping requirements to 40 CFR 63.1576(a)(2). When a source is subject to a different standard during startup and shutdown, it will be important to know when such startup and shutdown periods begin and end in order to determine compliance with the appropriate standard. Thus, the EPA is proposing to add language to 40 CFR 63.1576(a)(2) requiring that sources subject to an emission standard during startup or shutdown that differs from the emission standard that applies at all other times must record the date, time, and duration of such periods.

We are proposing to revise the 40 CFR part 63, subpart CC General Provisions table (Table 6) entry for 63.10(b)(2)(ii) by changing the ''Yes'' in the second column to a ''No.'' Similarly, we are proposing to revise the 40 CFR part 63,

subpart UUU General Provisions table (Table 44) entry for § 63.10(b) to include separate entries for specific paragraphs of 40 CFR 63.10(b), including an entry for § 63.10(b)(2)(ii) with ''No'' in the third column. Section 63.10(b)(2)(ii) describes the recordkeeping requirements during a malfunction. The EPA is proposing to add such requirements to 40 CFR 63.655(i)(11) and 40 CFR 63.1576(a)(2). The regulatory text we are proposing to add differs from the General Provisions language that was cross-referenced, which provides the creation and retention of a record of the occurrence and duration of each malfunction of process, air pollution control, and monitoring equipment. The proposed text would apply to any failure to meet an applicable standard and would require the source to record the date, time, and duration of the failure. The EPA is also proposing to add to 40 CFR 63.655(i)(11) and 40 CFR 63.1576(a)(2) a requirement that sources keep records that include a list of the affected source or equipment and actions taken to minimize emissions, an estimate of the quantity of each regulated pollutant emitted over the standard for which the source failed to meet a standard, and a description of the method used to estimate the emissions. Examples of such methods would include product-loss calculations, mass balance calculations, measurements when available, or engineering judgment based on known process parameters. The EPA is proposing to require that sources keep records of this information to ensure that there is adequate information to allow the EPA to determine the severity of any failure to meet a standard, and to provide data that may document how the source met the general duty to minimize emissions when the source has failed to meet an applicable standard.

We are proposing to revise the 40 CFR part 63, subpart CC General Provisions table (Table 6) entry for 63.10(b)(2)(iv) by changing the ''Yes'' in the second column to a ''No.'' Similarly, we are proposing to revise the 40 CFR part 63, subpart UUU General Provisions table (Table 44) entry for § 63.10(b) to include separate entries for specific paragraphs of 40 CFR 63.10(b), including an entry for § 63.10(b)(2)(iv)–(v) with ''No'' in the third column. When applicable, 40 CFR 63.10(b)(2)(iv) requires sources to record actions taken during SSM events when actions were inconsistent with their SSM plan. The requirement is no longer appropriate because SSM plans will no longer be required. The requirement previously applicable under 40 CFR 63.10(b)(2)(iv)(B) to record actions to minimize emissions and record corrective actions is now applicable by reference to 40 CFR 63.655(i)(11)(iii) and 40 CFR 63.1576(a)(2)(iii).

We are proposing to revise the 40 CFR part 63, subpart CC General Provisions table (Table 6) entry for 63.10(b)(2)(v) by changing the ''Yes'' in the second column to a ''No.'' Similarly, we are proposing to revise the 40 CFR part 63, subpart UUU General Provisions table (Table 44) entry for § 63.10(b) to include separate entries for specific paragraphs of 40 CFR 63.10(b), including an entry for § 63.10(b)(2)(iv)–(v) with ''No'' in the third column. When applicable, 40 CFR 63.10(b)(2)(v) requires sources to record actions taken during SSM events to show that actions taken were consistent with their SSM plan. The requirement is no longer appropriate because SSM plans would no longer be required.

We are proposing to revise the 40 CFR part 63, subpart UUU General Provisions table (Table 44) entry for § 63.10(c)(9)–(15) to include separate entries for specific paragraphs of 40 CFR 63.10(c), including an entry for § 63.10(c)(15) with ''No'' in the third column. The EPA is proposing that 40 CFR 63.10(c)(15) no longer apply. When applicable, the provision allows an owner or operator to use the affected source's SSM plan or records kept to satisfy the recordkeeping requirements of the SSM plan, specified in 40 CFR 63.6(e), to also satisfy the requirements of 40 CFR 63.10(c)(10) through (12). The EPA is proposing to eliminate this requirement because SSM plans would no longer be required, and therefore 40 CFR 63.10(c)(15) no longer serves any useful purpose for affected units.

g. Reporting

We are proposing to revise the 40 CFR part 63, subpart CC General Provisions table (Table 6) entries for 63.10(d)(5)(i) and 63.10(d)(5)(ii) by combining them into one entry for 63.10(d)(5) with a ''No'' in the second column. Similarly, we are proposing to revise the 40 CFR part 63, subpart UUU General Provisions table (Table 44) entries for 63.10(d)(5)(i) and 63.10(d)(5)(ii) by combining them into one entry for 63.10(d)(5) with a ''No'' in the third column. Section 63.10(d)(5) describes the reporting requirements for startups, shutdowns, and malfunctions. To replace the General Provisions reporting requirement, the EPA is proposing to add reporting requirements to 40 CFR 63.655(g)(12), 40 CFR 63.1575(c)(4), 40 CFR 63.1575(d), and 40 CFR 63.1575(e). The General Provisions requirement that was cross-referenced requires periodic SSM reports as a stand-alone report. In its place, we are proposing language that requires sources that fail to meet an applicable standard at any time to report the information concerning such events in the periodic report already required under each of these rules. We are proposing that the report must contain the number, date, time, duration, and the cause of such events (including unknown cause, if applicable), a list of the affected source or equipment, an estimate of the quantity of each regulated pollutant emitted over any emission limit, and a description of the method used to estimate the emissions.

Examples of methods that can be used to estimate emissions would include product-loss calculations, mass balance calculations, measurements when available, or engineering judgment based on known process parameters. The EPA is proposing this requirement to ensure that there is adequate information to determine compliance, to allow the EPA to determine the severity of the failure to meet an applicable standard, and to provide data that may document how the source met the general duty to minimize emissions during a failure to meet an applicable standard.

We will no longer require owners or operators to determine whether actions taken to correct a malfunction are consistent with an SSM plan, because SSM plans would no longer be required. The proposed rule eliminates the cross-reference to 40 CFR 63.10(d)(5)(i) that contains the description of the previously required SSM report format and submittal schedule from this section. These specifications are no longer necessary because the events will be reported in otherwise required reports with similar format and submittal requirements.

As noted above, we are proposing to revise the 40 CFR part 63, subpart CC General Provisions table (Table 6) entries for 63.10(d)(5)(i) and 63.10(d)(5)(ii) by combining them into one entry for 63.10(d)(5) with a ''No'' in the second column. Similarly, we are proposing to revise the 40 CFR part 63, subpart UUU General Provisions table (Table 44) entries for 63.10(d)(5)(i) and 63.10(d)(5)(ii) by combining them into one entry for 63.10(d)(5) with a ''No'' in the third column. Section 63.10(d)(5)(ii) describes an immediate report for startups, shutdown, and malfunctions when a source fails to meet an applicable standard but does not follow the SSM plan. We are proposing to no longer require owners and operators to report when actions taken during a startup, shutdown, or malfunction were not consistent with an SSM plan,

because such plans would no longer be required.

2. Electronic Reporting

In this proposal, the EPA is describing a process to increase the ease and efficiency of performance test data submittal while improving data accessibility. Specifically, the EPA is proposing that owners and operators of petroleum refineries submit electronic copies of required performance test and performance evaluation reports by direct computer-to-computer electronic transfer using EPA-provided software. The direct computer-to-computer electronic transfer is accomplished through the EPA's Central Data Exchange (CDX) using the Compliance and Emissions Data Reporting Interface (CEDRI). The CDX is EPA's portal for submittal of electronic data. The EPA-provided software is called the Electronic Reporting Tool (ERT) which is used to generate electronic reports of performance tests and evaluations. The ERT generates an electronic report package which will be submitted using the CEDRI. The submitted report package will be stored in the CDX archive (the official copy of record) and the EPA's public database called WebFIRE. All stakeholders will have access to all reports and data in WebFIRE and accessing these reports and data will be very straightforward and easy (see the WebFIRE Report Search and Retrieval link at *http://cfpub.epa.gov/webfire/index.cfm?action=fire.searchERTSubmission*). A description and instructions for use of the ERT can be found at *http://www.epa.gov/ttn/chief/ert/index.html* and CEDRI can be accessed through the CDX Web site (*www.epa.gov/cdx*). A description of the WebFIRE database is available at: *http://cfpub.epa.gov/oarweb/index.cfm?action=fire.main.*

The proposal to submit performance test data electronically to the EPA applies only to those performance tests (and/or performance evaluations) conducted using test methods that are supported by the ERT. The ERT supports most of the commonly used EPA reference methods. A listing of the pollutants and test methods supported by the ERT is available at: *http://www.epa.gov/ttn/chief/ert/index.html.*

We believe that industry would benefit from this proposed approach to electronic data submittal. Specifically, by using this approach, industry will save time in the performance test submittal process. Additionally, the standardized format that the ERT uses allows sources to create a more complete test report resulting in less time spent on data backfilling if a source failed to include all data elements required to be submitted. Also through this proposal industry may only need to submit a report once to meet the requirements of the applicable subpart because stakeholders can readily access these reports from the WebFIRE database. This also benefits industry by cutting back on recordkeeping costs as the performance test reports that are submitted to the EPA using CEDRI are no longer required to be retained in hard copy, thereby reducing staff time needed to coordinate these records.

Since the EPA will already have performance test data in hand, another benefit to industry is that fewer or less substantial data collection requests in conjunction with prospective required residual risk assessments or technology reviews will be needed. This would result in a decrease in staff time needed to respond to data collection requests.

State, local and tribal air pollution control agencies (S/L/Ts) may also benefit from having electronic versions of the reports they are now receiving. For example, S/L/Ts may be able to conduct a more streamlined and accurate review of electronic data submitted to them. For example, the ERT would allow for an electronic review process, rather than a manual data assessment, therefore, making review and evaluation of the source provided data and calculations easier and more efficient. In addition, the public stands to benefit from electronic reporting of emissions data because the electronic data will be easier for the public to access. How the air emissions data are collected, accessed and reviewed will be more transparent for all stakeholders.

One major advantage of the proposed submittal of performance test data through the ERT is a standardized method to compile and store much of the documentation required to be reported by this rule. The ERT clearly states what testing information would be required by the test method and has the ability to house additional data elements that might be required by a delegated authority.

In addition the EPA must have performance test data to conduct effective reviews of CAA sections 111 and 112 standards, as well as for many other purposes including compliance determinations, emission factor development and annual emission rate determinations. In conducting these required reviews, the EPA has found it ineffective and time consuming, not only for us, but also for regulatory agencies and source owners and operators, to locate, collect and submit performance test data. In recent years, stack testing firms have typically collected performance test data in electronic format, making it possible to move to an electronic data submittal system that would increase the ease and efficiency of data submittal and improve data accessibility.

A common complaint heard from industry and regulators is that emission factors are outdated or not representative of a particular source category. With timely receipt and incorporation of data from most performance tests, the EPA would be able to ensure that emission factors, when updated, represent the most current range of operational practices. Finally, another benefit of the proposed data submittal to WebFIRE electronically is that these data would greatly improve the overall quality of existing and new emissions factors by supplementing the pool of emissions test data for establishing emissions factors.

In summary, in addition to supporting regulation development, control strategy development and other air pollution control activities, having an electronic database populated with performance test data would save industry, state, local and tribal agencies and the EPA significant time, money and effort while also improving the quality of emission inventories and air quality regulations.

In addition, we are proposing that the fenceline data at each monitor location (as proposed above) would be reported electronically on a semiannual basis. All data reported electronically would be submitted to CDX through CEDRI and made available to the public.

3. Technical Amendments to Refinery MACT 1 and 2

a. Open-Ended Valves and Lines

Refinery MACT 1 requires an owner or operator to control emissions from equipment leaks according to the requirements of either 40 CFR part 60, subpart VV or 40 CFR part 63, subpart H. For open-ended valves and lines, both subparts require that the open end be equipped with a cap, blind flange, plug or second valve that ''shall seal the open end at all times.'' However, neither subpart defines ''seal'' or explains in practical and enforceable terms what constitutes a sealed open-ended valve or line. This has led to uncertainty on the part of the owner or operator as to whether compliance is being achieved. Inspections under the EPA's Air Toxics LDAR initiative have provided evidence that while certain open-ended lines may be equipped with a cap, blind flange, plug or second valve, they are not

operating in a ''sealed'' manner as the EPA interprets that term.

In response to this uncertainty, we are proposing to amend 40 CFR 63.648 to clarify what is meant by ''seal.'' This proposed amendment clarifies that, for the purpose of complying with the requirements of 40 CFR 63.648, open-ended valves and lines are ''sealed'' by the cap, blind flange, plug, or second valve when there are no detectable emissions from the open-ended valve or line at or above an instrument reading of 500 ppm. We solicit comment on this approach to reducing the compliance uncertainty associated with open-ended valves and lines and our proposed amendment.

b. General Provisions Cross-Referencing

We have reviewed the application of 40 CFR part 63, subpart A (General Provisions) to Refinery MACT 2. The applicable requirements of 40 CFR part 63, subpart A are contained in Table 44 of 40 CFR part 63, subpart UUU. As a result of our review, we are proposing several amendments to Table 44 of 40 CFR part 63, subpart UUU (in addition to those discussed in section IV.E.1 of this preamble that address SSM) to bring the table up-to-date with requirements of the General Provisions that have been amended since this table was created, to correct cross-references, and to incorporate additional sections of the General Provisions that are necessary to implement other subparts that are cross-referenced by this rule.

Although we reviewed the application of the General Provisions to Refinery MACT 1 and amended Table 6 of 40 CFR part 63, subpart CC in 2009, we are proposing a few additional technical corrections to this table (in addition to those discussed in section IV.E.1 of this preamble that address SSM). We are not discussing the details of these proposed technical corrections in this preamble but the rationale for each change to Table 6 of 40 CFR part 63, subpart CC and Table 44 of 40 CFR part 63, subpart UUU (including the proposed amendments to address SSM discussed above), is included in Docket ID Number EPA–HQ–OAR–2010–0682.

4. Amendments to Refinery NSPS J and Ja

As discussed in section II.B.2 of this preamble, we are addressing a number of technical corrections and clarifications for Refinery NSPS J and Ja to address some of the issues raised in the petition for reconsideration and to improve consistency and clarity of the rule requirements. These issues are addressed in detail in API's amended petition, dated August 21, 2008 (see Docket Item Number EPA–HQ–OAR–2007–0011–0246) and the meeting minutes for a September 11, 2008 meeting between EPA and API (see Docket Item Number EPA–HQ–OAR–2007–0011–0266).

a. The Depressurization Work Practice Standard for Delayed Coking Units

HOVENSA and the Industry Petitioners raised several issues with the analysis conducted to support the DCU work practice standard in Refinery NSPS Ja. With the promulgation and implementation of the standards we are proposing for the DCU under Refinery MACT 1, the DCU work practice standards in Refinery NSPS Ja are not expected to result in any further decreases in emissions from the DCU. Any DCU that becomes subject to Refinery NSPS Ja would already be in compliance with Refinery MACT 1, which is a more stringent standard than the DCU work practice standards in Refinery NSPS Ja. As such, we are contemplating various ideas for harmonizing the requirements for the DCU in these two regulations. One option is to amend Refinery NSPS Ja to incorporate the same requirements being proposed for Refinery MACT 1 (the DCU work practice standard in Refinery NSPS Ja is less stringent than the proposed requirements for Refinery MACT 1). Another option we are contemplating is deleting the DCU work practice standard within Refinery NSPS Ja once the DCU standards in Refinery MACT 1 are promulgated and fully implemented. We believe deletion of this work practice standard is consistent with the objectives of Executive Order 13563, ''Improving Regulation and Regulatory Review.'' We solicit comment on these options as well as any other comments regarding the interaction between the DCU requirements in these two rules (*i.e.,* the need to keep the DCU work practice standard in Refinery NSPS Ja after promulgation of these revisions to Refinery MACT 1.)

b. Technical Corrections and Clarifications

In addition to their primary issues, the Industry Petitioners enumerated several points of clarification and recommended amendments to Refinery NSPS J and Ja. These issues are addressed in detail in API's amended petition for reconsideration, dated August 21, 2008 (see Docket Item Number EPA–HQ–OAR–2007–0011–0246) and the meeting minutes for a September 11, 2008 meeting between EPA and API (see Docket Item Number EPA–HQ–OAR–2007–0011–0266). We are including several proposed amendments in this rulemaking to specifically address these issues. These amendments are discussed in the remainder of this section. We are addressing these issues now while we are proposing amendments for Refinery MACT 2 in an effort to improve consistency and clarity for sources regulated under both the NSPS and Refinery MACT 2.

We are proposing a series of amendments to the requirements for sulfur recovery plants in 40 CFR 60.102a, to clarify the applicable emission limits for different types of sulfur recovery plants based on whether oxygen enrichment is used. These amendments also clarify that emissions averaging across a group of emission points within a given sulfur recovery plant is allowed from each of the different types of sulfur recovery plants, and that emissions averaging is specific to the SO_2 or reduced sulfur standards (and not to the H_2S limit). The 10 ppmv H_2S limit for reduction control systems not followed by incineration must be met on a release point-specific basis. These amendments are being made to clarify the original intent of the Refinery NSPS Ja requirements for sulfur recovery plants.

We are proposing a series of corresponding amendments in 40 CFR 60.106a to clarify the monitoring requirements, particularly when oxygen enrichment or emissions averaging is used. The monitoring requirements in Refinery NSPS Ja were incomplete for these provisions and did not specify all of the types of monitoring devices needed for implementation. We are also proposing in 40 CFR 60.106a to use the term ''reduced sulfur compounds'' when referring to the emission limits and monitoring devices needed to comply with the reduced sulfur compound emission limits for sulfur recovery plants with reduction control systems not followed by incineration. The term ''reduced sulfur compounds'' is a defined term in Refinery NSPS Ja, and the emissions limit for sulfur recovery plants with reduction control systems not followed by incineration is specific to ''reduced sulfur compounds.'' Therefore, the proposed amendments to the monitoring provisions provide clarification of the requirements by using a consistent, defined term.

We are proposing amendments to 40 CFR 60.102a(g)(1) to clarify that CO boilers, while part of the FCCU affected facility, can also be fuel gas combustion devices (FGCD). Industry Petitioners suggested that the CO boiler should only be subject to the FCCU NO_X and SO_2

limits and should not be considered a FGCD. While Refinery NSPS Ja clearly states that the coke burn-off exhaust from the FCCU catalyst regenerator is not considered to be fuel gas, other fuels combusted in the CO boiler must meet the H_2S concentration requirements for fuel gas like any other FGCD. This amendment is provided to clarify our original intent with respect to fuel gas. Industry Petitioners also noted that some CO boiler ''furnaces'' may be used as process heaters rather than steam-generating boilers. While we did not originally contemplate that CO furnaces would be used as process heaters, available data from the detailed ICR suggests that there are a few CO furnaces used as process heaters. These CO furnaces are all forced-draft process heaters, and the newly amended NO_X emissions limit in Refinery NSPS Ja for forced-draft process heaters is 60 ppmv, averaged over a 30-day period. Given the longer averaging time of the process heater NO_X limits, these two emission limits (for FCCU NO_X and for process heater NO_X) are reasonably comparable and are not expected to result in a significant difference in the control systems selected for compliance. As such, we are not amending or clarifying the NO_X standards for the FCCU or process heaters at this time. We are, however, clarifying (through this response) that if an emission source meets the definition of more than one affected facility, that source would need to comply with all requirements applicable to the emissions source.

We are proposing to revise the annual testing requirement in 40 CFR 60.104a(b) to clarify our original intent. Instead of requiring a PM performance test at least once every 12 months, the rule would require a PM performance test annually and specify that annually means once per calendar year, with an interval of at least 8 months but no more than 16 months between annual tests. This provision will ensure that testing is conducted at a reasonable interval while giving owners and operators flexibility in scheduling the testing. We are also proposing to amend 40 CFR 60.104a(f) to clarify that the provisions of that paragraph are specific to owners or operators of an FCCU or FCU that use a cyclone to comply with the PM per coke burn-off emissions limit (rather than just the PM limit) in 40 CFR 60.102a(b)(1), to clarify that facilities electing to comply with the concentration limit using a PM CEMS would not also be required to install a COMS. We are also proposing to amend 40 CFR 60.104a(j) to delete the requirements to measure flow for the H_2S concentration limit for fuel gas, as these are not needed in the performance evaluation.

We are proposing amendments to 40 CFR 60.105a(b)(1)(ii)(A) to require corrective action be completed to repair faulty (leaking or plugged) air or water lines within 12 hours of identification of an abnormal pressure reading during the daily checks. We are also proposing amendments to 40 CFR 60.105a(i) to include periods when abnormal pressure readings for a jet ejector-type wet scrubber (or other type of wet scrubber equipped with atomizing spray nozzles) are not corrected within 12 hours of identification, and periods when a bag leak detection system alarm (for a fabric filter) is not alleviated within the time period specified in the rule. These proposed amendments are necessary so that periods when the APCD operation is compromised are properly managed and/or reported.

We are proposing amendments to 40 CFR 60.105(b)(1)(iv) and 60.107a(b)(1)(iv) to allow using tubes with a maximum span between 10 and 40 ppmv, inclusive, when $1 \leq N \leq 10$, where N = number of pump strokes rather than requiring use of tubes with ranges 0–10/0–100 ppm (N = 10/1) because different length-of-stain tube manufacturers have different span ranges, and none of the commercially-available tubes have a specific span of 0–10/0–100 ppm (N = 10/1). We are also proposing to amend 40 CFR 60.105(b)(3)(iii) and 40 CFR 60.107a(b)(3)(iii) to specify that the temporary daily stain sampling must be made using length-of stain tubes with a maximum span between 200 and 400 ppmv, inclusive, when $1 \leq N \leq 5$, where N = number of pump strokes. This proposed amendment clarifies this monitoring requirement, ensures the proper tube range is used, and provides some flexibility in span range to accommodate different manufacturers of the length-of-stain tubes. We also propose to delete the last sentence in 40 CFR 60.105(b)(3)(iii), as there is no long-term H_2S concentration limit in Refinery NSPS J.

We are proposing to clarify that flares are subject to the performance test requirements. We are also proposing to clarify those performance test requirements in 40 CFR 60.107a(e)(1)(ii) and 40 CFR 60.107a(e)(2)(ii) to remove the distinction between flares with or without routine flow. The term ''routine flow'' is not defined and it is difficult to make this distinction in practice.

F. What compliance dates are we proposing?

Amendments to Refinery MACT 1 and 2 proposed in this rulemaking for adoption under CAA section 112(d)(2) and (3) and CAA section 112(d)(6) are subject to the compliance deadlines outlined in the CAA under section 112(i). For all of the requirements we are proposing under CAA section 112(d)(2) and (3) or CAA section 112(d)(6) except for storage vessels, which we are also requiring under 112 (f)(2), we are proposing the following compliance dates. As provided in CAA section 112(i), new sources would be required to comply with these requirements by the effective date of the final amendments to Refinery MACT 1 and 2 or startup, whichever is later.

For existing sources, CAA section 112(i) provides that the compliance date shall be as expeditiously as practicable, but no later than 3 years after the effective date of the standard. In determining what compliance period is as expeditious as practicable, we consider the amount of time needed to plan and construct projects and change operating procedures. Under CAA section 112(d)(2) and (3), we are proposing new operating requirements for DCU. In order to comply with these new requirements, we project that most DCU owners or operators would need to install additional controls (*e.g.,* steam ejector systems). Similarly, the proposed revision in the CRU pressure limit exclusions would require operational changes and, in some cases, additional controls. The addition of new control equipment would require engineering design, solicitation and review of vendor quotes, contracting and installation of the equipment, which would need to be timed with process unit outage and operator training. Therefore, we are proposing that it is necessary to provide 3 years after the effective date of the final rule for these sources to comply with the DCU and CRU requirements.

We are proposing new operating and monitoring requirements for flares under CAA section 112(d)(2) and (3). We anticipate that these requirements would require the installation of new flare monitoring equipment and we project most refineries would install new control systems to monitor and adjust assist gas (air or steam) addition rates. Similar to the addition of new control equipment, these new monitoring requirements for flares would require engineering evaluations, solicitation and review of vendor quotes, contracting and installation of the equipment, and operator training.

Installation of new monitoring and control equipment on flares will require the flare to be taken out of service. Depending on the configuration of the flares and flare header system, taking the flare out of service may also require a significant portion of the refinery operations to be shut down. Therefore, we are proposing that it is necessary to provide 3 years after the effective date of the final rule for owners or operators to comply with the new operating and monitoring requirements for flares.

Under CAA section 112(d)(2) and (3), we are proposing new vent control requirements for bypasses. These requirements would typically require the addition of piping and potentially new control requirements. As these vent controls would most likely be routed to the flare, we are proposing to provide 3 years after the effective date of the final rule for owners or operators to afford coordination of these bypass modifications with the installation of the new monitoring equipment for the flares.

Under our technology review, we are proposing to require fenceline monitoring pursuant to CAA section 112(d)(6). These proposed provisions would require refinery owners or operators to install a number of monitoring stations around the facility fenceline. While the diffusive tube sampling system is relatively low-tech and is easy to install, site-specific factors must be considered in the placement of the monitoring systems. We also assume all refinery owners or operators would invest in the analytical equipment needed to perform automated sample analysis on-site and time is needed to select an appropriate vendor for this equipment. Furthermore, additional monitoring systems may be needed to account for near-field contributing sources, for which the development and approval of a site-specific monitoring plan. Considering all of the requirements needed to implement the fenceline monitoring system, we are proposing to provide 3 years from the effective date of the final rule for refinery owners or operators to install and begin collecting ambient air samples around the fenceline of their facility following an approved (if necessary) site-specific monitoring plan.

As a result of our technology review for equipment leaks, we are proposing to allow the use of optical gas imaging devices in lieu of using EPA Method 21 of 40 CFR part 60, Appendix A–7 without the annual compliance demonstration with EPA Method 21 as required in the AWP (see 73 FR 73202, December 22, 2008), provided that the owner and operator follows the provisions of Appendix K to 40 CFR part 60. Facilities could begin to comply with the optical gas imaging alternative as soon as Appendix K to 40 CFR part 60 is promulgated. Alternatively, as is currently provided in the AWP, the refinery owner or operator can elect to use the optical gas imaging monitoring option prior to installation and use of the fenceline monitoring system, provided they conduct an annual compliance demonstration using EPA Method 21 as required in the AWP.

Under our technology review for marine vessel loading operations, we are proposing to add a requirement for submerged filling for small and for offshore marine vessel loading operations. We anticipate that the submerged fill pipes are already in place on all marine vessels used to transport petroleum refinery liquids, so we are proposing that existing sources comply with this requirement on the effective date of the final rule. We request comment regarding the need to provide additional time to comply with the submerged filling requirement; please provide in your comment a description of the vessels loaded that do not already have a submerged fill pipe, how these vessels comply with (or are exempt from) the Coast Guard requirements at 46 CFR 153.282, and an estimate of the time needed to add the required submerged fill pipes to these vessels.

We are also proposing to require FCCU owners and operators currently subject to Refinery NSPS J (or electing that compliance option in Refinery MACT 2) to transition from the Refinery NSPS J option to one of the alternatives included in the proposed rule. We are also proposing altering the averaging times for some of the operating limits. A PM performance test is needed in order to establish these new operating limits prior to transitioning to the proposed requirements. Additionally, we are proposing that a PM performance test be conducted for each FCCU once every 5 years. We do not project any new control or monitoring equipment will be needed in order to comply with the proposed provisions; however, compliance with the proposed provisions is dependent on conducting a performance test. Establishing an early compliance date for the first performance test can cause scheduling issues as refinery owners or operators compete for limited number of testing contractors. Considering these scheduling issues, we propose to require the first performance test for PM and compliance with the new operating limits be completed no later than 18 months after the effective date of the final rule.

In this action, we are proposing revisions to the SSM provisions of Refinery MACT 1 and 2, including specific startup or shutdown standards for certain emission sources, and we are proposing electronic reporting requirements in Refinery MACT 1 and 2. The proposed monitoring requirements associated with the new startup and shutdown standards are expected to be present on the affected source, so we do not expect that owners or operators will need additional time to transition to these requirements. Similarly, the electronic reporting requirements are not expected to require a significant change in operation or equipment, so these requirements should be able to be implemented more quickly than those that require installation of new control or monitoring equipment. Based on our review of these requirements, we propose that these requirements become effective upon the effective date of the final rule.

Finally, we are proposing additional requirements for storage vessels under CAA sections 112(d)(6) and (f)(2). The compliance deadlines for standards developed under CAA section 112(f)(2) are delineated in CAA sections 112(f)(3) and (4). As provided in CAA section 112(f)(4), risk standards shall not apply to existing sources until 90 days after the effective date of the rule, but the Administrator may grant a waiver for a particular source for a period of up to 2 years after the effective date. While additional controls will be necessary to comply with the proposed new control and fitting requirements for storage vessels, the timing for installation of these controls is specified within the Generic MACT (40 CFR part 63, subpart WW). Therefore, we propose that these new requirements for storage vessels become effective 90 days following the effective date of the final rule.

V. Summary of Cost, Environmental and Economic Impacts

A. What are the affected sources, the air quality impacts and cost impacts?

The sources affected by significant amendments to the petroleum refinery standards include storage vessels, equipment leaks, fugitive emissions and DCU subject to Refinery MACT 1. The proposed amendments for other sources subject to one or more of the petroleum refinery standards are expected to have minimal air quality and cost impacts.

The total capital investment cost of the proposed amendments and standards is estimated at $239 million, $82.8 million from proposed amendments and $156 million from

standards to ensure compliance. We estimate annualized costs to be approximately $4.53 million, which includes an estimated $14.4 million credit for recovery of lost product and the annualized cost of capital. We also estimate annualized costs of the proposed standards to ensure compliance to be approximately $37.9 million. The proposed amendments would achieve a nationwide HAP emission reduction of 1,760 tpy, with a concurrent reduction in VOC emissions of 18,800 tpy. Table 13 of this preamble summarizes the cost and emission reduction impacts of the proposed amendments, and Table 14 of this preamble summarizes the costs of the proposed standards to ensure compliance.

TABLE 13—NATIONWIDE IMPACTS OF PROPOSED AMENDMENTS

Affected source	Total capital investment (million $)	Total annualized cost without credit (million $/yr)	Product recovery credit (million $/yr)	Total annualized costs (million $/yr)	VOC emission reductions (tpy)	Cost effectiveness ($/ton VOC)	HAP emission reductions (tpy)	Cost effectiveness ($/ton HAP)
Storage Vessels	18.5	3.13	(8.16)	(5.03)	14,600	(345)	910	(5,530)
Delayed Coking Units	52.0	10.2	(6.20)	3.98	4,250	937	850	4,680
Fugitive Emissions (Fenceline Monitoring)	12.2	5.58	.....	5.58	.....	.....	.....	.....
Total	82.8	18.9	(14.4)	4.53	18,800	241	1,760	2,570

TABLE 14—NATIONWIDE COSTS OF PROPOSED AMENDMENTS TO ENSURE COMPLIANCE

Affected source	Total capital investment (million $)	Total annualized cost without credit (million $/yr)	Product recovery credit (million $/yr)	Total annualized costs (million $/yr)
Relief Valve Monitoring	9.54	1.36	.....	1.36
Flare Monitoring	147	36.3	.....	36.3
FCCU Testing	—	0.21	.....	0.21
Total	156	37.9	—	37.9

Note that any corrective actions taken in response to the fenceline monitoring program are not included in the impacts shown in Table 13. Any corrective actions associated with fenceline monitoring will result in additional emission reductions and additional costs.

The impacts shown in Table 14 do not consider emission reductions associated with relief valve or flare monitoring provisions or emission reductions that may occur as a result of the additional FCCU testing requirements. The proposed operational and monitoring requirements for flares at refineries have the potential to reduce excess emissions from flares by approximately 3,800 tpy of HAP, 33,000 tpy of VOC, and 327,000 metric tonnes per year of CO_2e. When added to the reductions in CO_2e achieved from proposed controls on DCU, these proposed amendments are projected to result in reductions of 670,000 metric tonnes of CO_2e due to reductions of methane emissions.[42]

[42] The flare operational and monitoring requirements are projected to reduce methane emissions by 29,500 tpy while increasing CO_2 emissions by 260,000 tpy, resulting in a net GHG reduction of 327,000 metric tonnes per year of CO_2e, assuming a global warming potential of 21 for methane. Combined with methane emissions reduction of 18,000 tpy from the proposed controls on DCU, the overall GHG reductions of the proposed amendments is 670,000 metric tonnes per year of CO_2e assuming a global warming potential of 21 for methane.

B. What are the economic impacts?

We performed a national economic impact analysis for petroleum product producers. All petroleum product refiners will incur annual compliance costs of much less than 1 percent of their sales. For all firms, the minimum cost-to-sales ratio is <0.01 percent; the maximum cost-to-sales ratio is 0.87 percent; and the mean cost-to-sales ratio is 0.03 percent. Therefore, the overall economic impact of this proposed rule should be minimal for the refining industry and its consumers.

In addition, the EPA performed a screening analysis for impacts on small businesses by comparing estimated annualized engineering compliance costs at the firm-level to firm sales. The screening analysis found that the ratio of compliance cost to firm revenue falls below 1 percent for the 28 small companies likely to be affected by the proposal. For small firms, the minimum cost-to-sales ratio is <0.01 percent; the maximum cost-to-sales ratio is 0.62 percent; and the mean cost-to-sales ratio is 0.07 percent.

More information and details of this analysis are provided in the technical document *Economic Impact Analysis for Petroleum Refineries Proposed Amendments to the National Emissions Standards for Hazardous Air Pollutants,* which is available in the docket for this proposed rule (Docket ID Number EPA–HQ–OAR–2010–0682).

C. What are the benefits?

The proposed rule is anticipated to result in a reduction of 1,760 tons of HAP (based on allowable emissions under the MACT standards) and 18,800 tons of VOC emissions per year, not including potential emission reductions that may occur as a result of the proposed provisions for flares or fenceline monitoring. These avoided emissions will result in improvements in air quality and reduced negative health effects associated with exposure to air pollution of these emissions; however, we have not quantified or monetized the benefits of reducing these emissions for this rulemaking.

VI. Request for Comments

We solicit comments on all aspects of this proposed action. In addition to general comments on this proposed action, we are also interested in additional data that may improve the risk assessments and other analyses. We are specifically interested in receiving any improvements to the data used in the site-specific emissions profiles used for risk modeling. Such data should include supporting documentation in sufficient detail to allow characterization of the quality and representativeness of the data or information. Section VII of this preamble provides more information on submitting data.

VII. Submitting Data Corrections

The site-specific emissions profiles used in the source category risk and demographic analyses and instructions are available on the RTR Web page at: *http://www.epa.gov/ttn/atw/rrisk/rtrpg.html*. The data files include detailed information for each HAP emissions release point for the facilities in the source categories.

If you believe that the data are not representative or are inaccurate, please identify the data in question, provide your reason for concern and provide any ''improved'' data that you have, if available. When you submit data, we request that you provide documentation of the basis for the revised values to support your suggested changes. To submit comments on the data downloaded from the RTR page, complete the following steps:

1. Within this downloaded file, enter suggested revisions to the data fields appropriate for that information.
2. Fill in the commenter information fields for each suggested revision (*i.e.,* commenter name, commenter organization, commenter email address, commenter phone number and revision comments).
3. Gather documentation for any suggested emissions revisions (*e.g.,* performance test reports, material balance calculations).
4. Send the entire downloaded file with suggested revisions in Microsoft® Access format and all accompanying documentation to Docket ID Number EPA–HQ–OAR–2010–0682 (through one of the methods described in the **ADDRESSES** section of this preamble).
5. If you are providing comments on a single facility or multiple facilities, you need only submit one file for all facilities. The file should contain all suggested changes for all sources at that facility. We request that all data revision comments be submitted in the form of updated Microsoft® Excel files that are generated by the Microsoft® Access file. These files are provided on the RTR Web page at: *http://www.epa.gov/ttn/atw/rrisk/rtrpg.html*.

VIII. Statutory and Executive Order Reviews

A. Executive Order 12866: Regulatory Planning and Review and Executive Order 13563: Improving Regulation and Regulatory Review

Under Executive Order 12866 (58 FR 51735, October 4, 1993), this action is a ''significant regulatory action'' because it raises novel legal and policy issues. Accordingly, the EPA submitted this action to the Office of Management and Budget (OMB) for review under Executive Orders 12866 and 13563 (76 FR 3821, January 21, 2011) and any changes made in response to OMB recommendations have been documented in the docket for this action (Docket ID Number EPA–HQ–OAR–2010–0682).

B. Paperwork Reduction Act

The information collection requirements in this rule have been submitted for approval to OMB under the Paperwork Reduction Act, 44 U.S.C. 3501, *et seq.*

Revisions and burden associated with amendments to 40 CFR part 63, subparts CC and UUU are discussed in the following paragraphs. OMB has previously approved the information collection requirements contained in the existing regulations in 40 CFR part 63, subparts CC and UUU under the provisions of the Paperwork Reduction Act, 44 U.S.C. 3501, *et seq.,* OMB control numbers for the EPA's regulations in 40 CFR are listed in 40 CFR part 9. Burden is defined at 5 CFR 1320.3(b).

The ICR document prepared by the EPA for the amendments to the Petroleum Refinery MACT standards for 40 CFR part 63, subpart CC has been assigned the EPA ICR number 1692.08. Burden changes associated with these amendments would result from new monitoring, recordkeeping and reporting requirements. The estimated annual increase in recordkeeping and reporting burden hours is 53,619 hours; the frequency of response is semiannual for all reports for all respondents that must comply with the rule's reporting requirements; and the estimated average number of likely respondents per year is 95 (this is the average in the second year). The cost burden to respondents resulting from the collection of information includes the total capital cost annualized over the equipment's expected useful life (about $17 million, which includes monitoring equipment for bypass valves, fenceline monitoring, relief valves, and flares), a total operation and maintenance component (about $16 million per year for fenceline and flare monitoring), and a labor cost component (about $4.5 million per year, the cost of the additional 53,619 labor hours). An agency may not conduct or sponsor (and a person is not required to respond to) a collection of information unless it displays a currently-valid OMB control number.

The ICR document prepared by the EPA for the amendments to the Petroleum Refinery MACT standards for 40 CFR part 63, subpart UUU has been assigned the EPA ICR number 1844.07. Burden changes associated with these amendments would result from new testing, recordkeeping and reporting requirements being proposed with this action. The estimated average burden per response is 26 hours; the frequency of response is both once and every 5 years for respondents that have FCCU, and the estimated average number of likely respondents per year is 67. The cost burden to respondents resulting from the collection of information includes the performance testing costs (approximately $356,000 per year over the first 3 years for the initial performance test and $213,000 per year starting in the fourth year), and a labor cost component (approximately $238,000 per year for 2,860 additional labor hours). An agency may not conduct or sponsor (and a person is not required to respond to) a collection of information unless it displays a currently-valid OMB control number.

To comment on the agency's need for this information, the accuracy of the provided burden estimates, and any suggested methods for minimizing respondent burden, the EPA has established a public docket for this rule, which includes the ICR, under Docket ID Number EPA–HQ–OAR–2010–0682. Submit any comments related to the ICR to the EPA and OMB. See the **ADDRESSES** section at the beginning of this preamble for where to submit comments to the EPA. Send comments to OMB at the Office of Information and Regulatory Affairs, Office of Management and Budget, 725 17th Street NW., Washington, DC 20503, Attention: Desk Office for the EPA. Since OMB is required to make a decision concerning the ICR between 30 and 60 days after June 30, 2014, a comment to OMB is best assured of having its full effect if OMB receives it by July 30, 2014. The final rule will respond to any OMB or public comments on the information collection requirements contained in this proposal.

C. Regulatory Flexibility Act

The Regulatory Flexibility Act (RFA) generally requires an agency to prepare a regulatory flexibility analysis of any rule subject to notice and comment rulemaking requirements under the Administrative Procedure Act or any other statute, unless the agency certifies that the rule will not have a significant economic impact on a substantial number of small entities (SISNOSE). Small entities include small businesses, small organizations and small governmental jurisdictions. For purposes of assessing the impacts of this proposed rule on small entities, a small entity is defined as: (1) A small business in the petroleum refining industry

having 1,500 or fewer employees (Small Business Administration (SBA), 2011); (2) a small governmental jurisdiction that is a government of a city, county, town, school district or special district with a population of less than 50,000; and (3) a small organization that is any not-for-profit enterprise which is independently owned and operated and is not dominant in its field.

After considering the economic impacts of this proposed rule on small entities, I certify that this action will not have a significant economic impact on a substantial number of small entities. The small entities subject to the requirements of this proposed rule are small refiners. We have determined that 36 companies (59 percent of the 61 total) employ fewer than 1,500 workers and are considered to be small businesses. For small businesses, the average cost-to-sales ratio is about 0.05 percent, the median cost-to-sales ratio is 0.02 percent and the maximum cost-to-sales ratio is 0.55 percent. The potential costs do not have a more significant impact on small refiners and because no small firms are expected to have cost-to-sales ratios greater than 1 percent, we determined that the cost impacts for this rulemaking will not have a SISNOSE.

Although not required by the RFA to convene a Small Business Advocacy Review (SBAR) Panel; because the EPA has determined that this proposal would not have a significant economic impact on a substantial number of small entities, the EPA originally convened a panel to obtain advice and recommendations from small entity representatives potentially subject to this rule's requirements. The panel was not formally concluded; however, a summary of the outreach conducted and the written comments submitted by the small entity representatives can be found in the docket for this proposed rule (Docket ID Number EPA–HQ–OAR–2010–0682).

We continue to be interested in the potential impacts of the proposed rule on small entities and welcome comments on issues related to such impacts.

D. Unfunded Mandates Reform Act

This proposed rule does not contain a federal mandate under the provisions of Title II of the Unfunded Mandates Reform Act of 1995 (UMRA), 2 U.S.C. 1531–1538 that may result in expenditures of $100 million or more for state, local and tribal governments, in the aggregate, or the private sector in any one year. As discussed earlier in this preamble, these amendments result in nationwide costs of $42.4 million per year for the private sector. Thus, this proposed rule is not subject to the requirements of sections 202 or 205 of the UMRA.

This proposed rule is also not subject to the requirements of section 203 of UMRA because it contains no regulatory requirements that might significantly or uniquely affect small governments because it contains no requirements that apply to such governments and does not impose obligations upon them.

E. Executive Order 13132: Federalism

This rule does not have federalism implications. It will not have substantial direct effects on the states, on the relationship between the national government and the states, or on the distribution of power and responsibilities among the various levels of government, as specified in Executive Order 13132. None of the facilities subject to this action are owned or operated by state governments, and, because no new requirements are being promulgated, nothing in this proposal will supersede state regulations. Thus, Executive Order 13132 does not apply to this rule.

In the spirit of Executive Order 13132, and consistent with the EPA policy to promote communications between the EPA and state and local governments, the EPA specifically solicits comment on this proposed rule from state and local officials.

F. Executive Order 13175: Consultation and Coordination With Indian Tribal Governments

This action does not have tribal implications, as specified in Executive Order 13175 (65 FR 67249, November 9, 2000). It will not have substantial direct effects on tribal governments, on the relationship between the federal government and Indian tribes, or on the distribution of power and responsibilities between the federal government and Indian tribes as specified in Executive Order 13175. Thus, Executive Order 13175 does not apply to this action.

Although Executive Order 13175 does not apply to this action, the EPA consulted with tribal officials in developing this action. The EPA sent out letters to tribes nationwide to invite them to participate in a tribal consultation meeting and solicit their input on this rulemaking. The EPA conducted the tribal consultation meeting on December 14, 2011. Participants from eight tribes attended the meeting, but they were interested only in outreach, and none of the tribes had delegation for consultation. The EPA presented all the information prepared for the consultation and conducted a question and answer session where participants asked clarifying questions about the information that was presented and generally expressed their support of the rulemaking requirements.

The EPA specifically solicits additional comment on this proposed action from tribal officials.

G. Executive Order 13045: Protection of Children From Environmental Health Risks and Safety Risks

This action is not subject to Executive Order 13045 (62 FR 19885, April 23, 1997) because it is not economically significant as defined in Executive Order 12866, and because the agency does not believe the environmental health or safety risks addressed by this action present a disproportionate risk to children. This action's health and risk assessments are contained in sections III.A and B and sections IV.C and D of this preamble.

The public is invited to submit comments or identify peer-reviewed studies and data that assess effects of early life exposure to emissions from petroleum refineries.

H. Executive Order 13211: Actions Concerning Regulations That Significantly Affect Energy Supply, Distribution, or Use

This action is not a ''significant energy action'' as defined under Executive Order 13211 (66 FR 28355, May 22, 2001), because it is not likely to have significant adverse effect on the supply, distribution or use of energy. The overall economic impact of this proposed rule should be minimal for the refining industry and its consumers.

I. National Technology Transfer and Advancement Act

Section 12(d) of the National Technology Transfer and Advancement Act of 1995 (NTTAA), Public Law No. 104–113, 12(d) (15 U.S.C. 272 note) directs the EPA to use voluntary consensus standards (VCS) in its regulatory activities unless to do so would be inconsistent with applicable law or otherwise impractical. VCS are technical standards (*e.g.,* materials specifications, test methods, sampling procedures, and business practices) that are developed or adopted by VCS bodies. The NTTAA directs the EPA to provide Congress, through OMB, explanations when the agency decides not to use available and applicable VCS.

This proposed rulemaking involves technical standards. The EPA proposes to use ISO 16017–2, ''Air quality Sampling and analysis of volatile organic compounds in ambient air,

indoor air and workplace air by sorbent tube/thermal desorption/capillary gas chromatography Part 2: Diffusive sampling'' as an acceptable alternative to EPA Method 325A. This method is available at *http://www.iso.org*. This method was chosen because it meets the requirements of EPA Method 301 for equivalency, documentation and validation data for diffusive tube sampling.

The EPA welcomes comments on this aspect of the proposed rulemaking and, specifically, invites the public to identify potentially-applicable VCS and to explain why such standards should be used in this regulation.

J. Executive Order 12898: Federal Actions To Address Environmental Justice in Minority Populations and Low-Income Populations

Executive Order 12898 (59 FR 7629, February 16, 1994) establishes federal executive policy on environmental justice. Its main provision directs federal agencies, to the greatest extent practicable and permitted by law, to make environmental justice part of their mission by identifying and addressing, as appropriate, disproportionately high and adverse human health or environmental effects of their programs, policies and activities on minority populations and low-income populations in the United States.

The EPA has determined that this proposed rule will not have disproportionately high and adverse human health or environmental effects on minority, low-income or indigenous populations because it maintains or increases the level of environmental protection for all affected populations without having any disproportionately high and adverse human health or environmental effects on any population, including any minority, low-income or indigenous populations. Further, the EPA believes that implementation of the provisions of this rule will provide an ample margin of safety to protect public health of all demographic groups.

To examine the potential for any environmental justice issues that might be associated with the refinery source categories associated with today's proposed rule, we evaluated the percentages of various social, demographic and economic groups within the at-risk populations living near the facilities where these source categories are located and compared them to national averages. Our analysis of the demographics of the population with estimated risks greater than 1-in-1 million indicates potential disparities in risks between demographic groups, including the African American, Other and Multiracial, Hispanic, Below the Poverty Level, and Over 25 without a High School Diploma groups. In addition, the population living within 50 km of the 142 petroleum refineries has a higher percentage of minority, lower income and lower education persons when compared to the nationwide percentages of those groups. These groups stand to benefit the most from the emission reductions achieved by this proposed rulemaking, and this proposed rulemaking is projected to result in 1 million fewer people exposed to risks greater than 1-in-1 million.

The EPA defines ''Environmental Justice'' to include meaningful involvement of all people regardless of race, color, national origin or income with respect to the development, implementation and enforcement of environmental laws, regulations and policies. To promote meaningful involvement, the EPA conducted numerous outreach activities and discussions, including targeted outreach (such as conference calls and Webinars) to communities and environmental justice organizations. In addition, after the rule is proposed, the EPA will be conducting a webinar to inform the public about the proposed rule and to outline how to submit written comments to the docket. Further stakeholder and public input is expected through public comment and follow-up meetings with interested stakeholders.

List of Subjects

40 CFR Part 60

Environmental protection, Administrative practice and procedure, Air pollution control, Incorporation by reference, Intergovernmental relations, Reporting and recordkeeping requirements.

40 CFR Part 63

Environmental protection, Air pollution control, Hazardous substances, Incorporation by reference, Reporting and recordkeeping requirements, Volatile organic compounds.

Dated: May 15, 2014.

Gina McCarthy,

Administrator.

For the reasons stated in the preamble, title 40, chapter I, of the Code of Federal Regulations is proposed to be amended as follows:

PART 60—STANDARDS OF PERFORMANCE FOR NEW STATIONARY SOURCES

■ 1. The authority citation for part 60 continues to read as follows:

Authority: 42 U.S.C. 7401, *et seq.*

Subpart J—[AMENDED]

■ 2. Section 60.105 is amended by:

■ a. Revising paragraph (b)(1)(iv) and

■ b. Revising paragraph (b)(3)(iii) to read as follows:

§ 60.105 Monitoring of emissions and operations.

* * * * *

(b) * * *

(1) * * *

(iv) The supporting test results from sampling the requested fuel gas stream/system demonstrating that the sulfur content is less than 5 ppmv. Sampling data must include, at minimum, 2 weeks of daily monitoring (14 grab samples) for frequently operated fuel gas streams/systems; for infrequently operated fuel gas streams/systems, seven grab samples must be collected unless other additional information would support reduced sampling. The owner or operator shall use detector tubes (''length-of-stain tube'' type measurement) following the ''Gas Processors Association Standard 2377–86, Test for Hydrogen Sulfide and Carbon Dioxide in Natural Gas Using Length of Stain Tubes,'' 1986 Revision (incorporated by reference—see § 60.17), using tubes with a maximum span between 10 and 40 ppmv inclusive when $1 \leq N \leq 10$, where N = number of pump strokes, to test the applicant fuel gas stream for H_2S; and

* * * * *

(3) * * *

(iii) If the operation change results in a sulfur content that is outside the range of concentrations included in the original application and the owner or operator chooses not to submit new information to support an exemption, the owner or operator must begin H_2S monitoring using daily stain sampling to demonstrate compliance using length-of-stain tubes with a maximum span between 200 and 400 ppmv inclusive when $1 \leq N \leq 5$, where N = number of pump strokes. The owner or operator must begin monitoring according to the requirements in paragraphs (a)(1) or (a)(2) of this section as soon as practicable but in no case later than 180 days after the operation change. During daily stain tube sampling, a daily sample exceeding 162 ppmv is an

exceedance of the 3-hour H_2S concentration limit.

* * * * *

Subpart Ja—[AMENDED]

■ 3. Section 60.100a is amended by revising the first sentence of paragraph (b) to read as follows:

§ 60.100a Applicability, designation of affected facility, and reconstruction.

* * * * *

(b) Except for flares, the provisions of this subpart apply only to affected facilities under paragraph (a) of this section which either commence construction, modification or reconstruction after May 14, 2007, or elect to comply with the provisions of this subpart in lieu of complying with the provisions in subpart J of this part. * * *

■ 4. Section 60.101a is amended by:

■ a. Revising the definition of ''Corrective action''; and

■ b. Adding, in alphabetical order, a definition for ''Sour water'' to read as follows:

§ 60.101a Definitions.

* * * * *

Corrective action means the design, operation and maintenance changes that one takes consistent with good engineering practice to reduce or eliminate the likelihood of the recurrence of the primary cause and any other contributing cause(s) of an event identified by a root cause analysis as having resulted in a discharge of gases from an affected facility in excess of specified thresholds.

* * * * *

Sour water means water that contains sulfur compounds (usually H_2S) at concentrations of 10 parts per million by weight or more.

* * * * *

■ 5. Section 60.102a is amended by:

■ a. Revising paragraphs (b)(1)(i) and (iii);

■ b. Revising paragraph (f); and

■ c. Revising paragraph (g)(1).

The revisions read as follows:

§ 60.102a Emissions limitations.

* * * * *

(b) * * *

(1) * * *

(i) 1.0 gram per kilogram (g/kg) (1 pound (lb) per 1,000 lb) coke burn-off or, if a PM continuous emission monitoring system (CEMS) is used, 0.040 grain per dry standard cubic feet (gr/dscf) corrected to 0 percent excess air for each modified or reconstructed FCCU.

* * * * *

(iii) 1.0 g/kg (1 lb/1,000 lb) coke burn-off or, if a PM CEMS is used, 0.040 grain per dry standard cubic feet (gr/dscf) corrected to 0 percent excess air for each affected FCU.

* * * * *

(f) Except as provided in paragraph (f)(3), each owner or operator of an affected sulfur recovery plant shall comply with the applicable emission limits in paragraphs (f)(1) or (2) of this section.

(1) For a sulfur recovery plant with a design production capacity greater than 20 long tons per day (LTD), the owner or operator shall comply with the applicable emission limit in paragraphs (f)(1)(i) or (f)(1)(ii) of this section. If the sulfur recovery plant consists of multiple process trains or release points, the owner or operator shall comply with the applicable emission limit for each process train or release point individually or comply with the applicable emission limit in paragraphs (f)(1)(i) or (f)(1)(ii) of this section as a flow rate weighted average for a group of release points from the sulfur recovery plant provided that flow is monitored as specified in § 60.106a(a)(7); if flow is not monitored as specified in § 60.106a(a)(7), the owner or operator shall comply with the applicable emission limit in paragraphs (f)(1)(i) or (f)(1)(ii) of this section for each process train or release point individually. For a sulfur recovery plant with a design production capacity greater than 20 long LTD and a reduction control system not followed by incineration, the owner or operator shall also comply with the H_2S emission limit in paragraph (f)(1)(iii) of this section for each individual release point.

(i) For a sulfur recovery plant with an oxidation control system or a reduction control system followed by incineration, the owner or operator shall not discharge or cause the discharge of any gases into the atmosphere (SO_2) in excess of the emission limit calculated using Equation 1 of this section. For Claus units that use only ambient air in the Claus burner or that elect not to monitor O_2 concentration of the air/oxygen mixture used in the Claus burner or for non-Claus sulfur recovery plants, this SO_2 emissions limit is 250 ppmv (dry basis) at zero percent excess air.

$$E_{LS} = k_1 \times \left(-0.038 \times (\%O_2)^2 + 11.53 \times \%O_2 + 25.6\right) \qquad \text{(Eq. 1)}$$

Where:

E_{LS} = Emission limit for large sulfur recovery plant, ppmv (as SO_2, dry basis at zero percent excess air);

k_1 = Constant factor for emission limit conversion: k_1 = 1 for converting to the SO_2 limit for a sulfur recovery plant with an oxidation control system or a reduction control system followed by incineration and k_1 = 1.2 for converting to the reduced sulfur compounds limit for a sulfur recovery plant with a reduction control system not followed by incineration; and

$\%O_2$ = O_2 concentration of the air/oxygen mixture supplied to the Claus burner, percent by volume (dry basis). If only ambient air is used for the Claus burner or if the owner or operator elects not to monitor O_2 concentration of the air/oxygen mixture used in the Claus burner or for non-Claus sulfur recovery plants, use 20.9% for $\%O_2$.

(ii) For a sulfur recovery plant with a reduction control system not followed by incineration, the owner or operator shall not discharge or cause the discharge of any gases into the atmosphere containing reduced sulfur compounds in excess of the emission limit calculated using Equation 1 of this section. For Claus units that use only ambient air in the Claus burner or for non-Claus sulfur recovery plants, this reduced sulfur compounds emission limit is 300 ppmv calculated as ppmv SO_2 (dry basis) at 0-percent excess air.

(iii) For a sulfur recovery plant with a reduction control system not followed by incineration, the owner or operator shall not discharge or cause the discharge of any gases into the atmosphere containing hydrogen sulfide (H_2S) in excess of 10 ppmv calculated as ppmv SO_2 (dry basis) at zero percent excess air.

(2) For a sulfur recovery plant with a design production capacity of 20 LTD or less, the owner or operator shall comply with the applicable emission limit in paragraphs (f)(2)(i) or (f)(2)(ii) of this section. If the sulfur recovery plant consists of multiple process trains or release points, the owner or operator may comply with the applicable emission limit for each process train or release point individually or comply with the applicable emission limit in paragraphs (f)(2)(i) or (f)(2)(ii) of this

section as a flow rate weighted average for a group of release points from the sulfur recovery plant provided that flow is monitored as specified in § 60.106a(a)(7); if flow is not monitored as specified in § 60.106a(a)(7), the owner or operator shall comply with the applicable emission limit in paragraphs (f)(2)(i) or (f)(2)(ii) of this section for each process train or release point individually. For a sulfur recovery plant with a design production capacity of 20 LTD or less and a reduction control system not followed by incineration, the owner or operator shall also comply with the H_2S emission limit in paragraph (f)(2)(iii) of this section for each individual release point.

(i) For a sulfur recovery plant with an oxidation control system or a reduction control system followed by incineration, the owner or operator shall not discharge or cause the discharge of any gases into the atmosphere containing SO_2 in excess of the emission limit calculated using Equation 2 of this section. For Claus units that use only ambient air in the Claus burner or that elect not to monitor O_2 concentration of the air/oxygen mixture used in the Claus burner or for non-Claus sulfur recovery plants, this SO_2 emission limit is 2,500 ppmv (dry basis) at zero percent excess air.

$$E_{SS} = k_1 \times \left(-0.38 \times (\%O_2)^2 + 115.3 \times \%O_2 + 256\right) \qquad \text{(Eq. 2)}$$

Where:

E_{SS} = Emission limit for small sulfur recovery plant, ppmv (as SO_2, dry basis at zero percent excess air);

k_1 = Constant factor for emission limit conversion: k_1 = 1 for converting to the SO_2 limit for a sulfur recovery plant with an oxidation control system or a reduction control system followed by incineration and k_1 = 1.2 for converting to the reduced sulfur compounds limit for a sulfur recovery plant with a reduction control system not followed by incineration; and

$\%O_2$ = O_2 concentration of the air/oxygen mixture supplied to the Claus burner, percent by volume (dry basis). If only ambient air is used in the Claus burner or if the owner or operator elects not to monitor O_2 concentration of the air/oxygen mixture used in the Claus burner or for non-Claus sulfur recovery plants, use 20.9% for $\%O_2$.

(ii) For a sulfur recovery plant with a reduction control system not followed by incineration, the owner or operator shall not discharge or cause the discharge of any gases into the atmosphere containing reduced sulfur compounds in excess of the emission limit calculated using Equation 2 of this section. For Claus units that use only ambient air in the Claus burner or for non-Claus sulfur recovery plants, this reduced sulfur compounds emission limit is 3,000 ppmv calculated as ppmv SO_2 (dry basis) at zero percent excess air.

(iii) For a sulfur recovery plant with a reduction control system not followed by incineration, the owner or operator shall not discharge or cause the discharge of any gases into the atmosphere containing H_2S in excess of 100 ppmv calculated as ppmv SO_2 (dry basis) at zero percent excess air.

(3) The emission limits in paragraphs (f)(1) and (2) shall not apply during periods of maintenance of the sulfur pit, which shall not exceed 240 hours per year. The owner or operator must document the time periods during which the sulfur pit vents were not controlled and measures taken to minimize emissions during these periods. Examples of these measures include not adding fresh sulfur or shutting off vent fans.

(g) * * *

(1) Except as provided in (g)(1)(iii) of this section, for each fuel gas combustion device, the owner or operator shall comply with either the emission limit in paragraph (g)(1)(i) of this section or the fuel gas concentration limit in paragraph (g)(1)(ii) of this section. For CO boilers or furnaces that are part of a fluid catalytic cracking unit or fluid coking unit affected facility, the owner or operator shall comply with the fuel gas concentration limit in paragraph (g)(1)(ii) of this section for all fuel gas streams combusted in these units.

* * * * *

■ 6. Section 60.104a is amended by:

■ a. Revising the first sentence of paragraph (a);

■ b. Revising paragraph (b);

■ c. Revising paragraph (f) introductory text;

■ d. Revising paragraph (h) introductory text;

■ e. Adding paragraph (h)(6); and

■ f. Removing and reserving paragraphs (j)(1) through (3).

The revisions and additions read as follows:

§ 60.104a Performance tests.

* * * * *

(a) The owner or operator shall conduct a performance test for each FCCU, FCU, sulfur recovery plant and fuel gas combustion device to demonstrate initial compliance with each applicable emissions limit in § 60.102a and conduct a performance test for each flare to demonstrate initial compliance with the H_2S concentration requirement in § 60.103a(h) according to the requirements of § 60.8. * * *

(b) The owner or operator of a FCCU or FCU that elects to monitor control device operating parameters according to the requirements in § 60.105a(b), to use bag leak detectors according to the requirements in § 60.105a(c), or to use COMS according to the requirements in § 60.105a(e) shall conduct a PM performance test at least annually (i.e., once per calendar year, with an interval of at least 8 months but no more than 16 months between annual tests) and furnish the Administrator a written report of the results of each test.

* * * * *

(f) The owner or operator of an FCCU or FCU that uses cyclones to comply with the PM per coke burn-off emissions limit in § 60.102a(b)(1) shall establish a site-specific opacity operating limit according to the procedures in paragraphs (f)(1) through (3) of this section.

* * * * *

(h) The owner or operator shall determine compliance with the SO_2 emissions limits for sulfur recovery plants in §§ 60.102a(f)(1)(i) and 60.102a(f)(2)(i) and the reduced sulfur compounds and H_2S emissions limits for sulfur recovery plants in §§ 60.102a(f)(1)(ii), 60.102a(f)(1)(iii), 60.102a(f)(2)(ii) and 60.102a(f)(2)(iii) using the following methods and procedures:

* * * * *

(6) If oxygen or oxygen-enriched air is used in the Claus burner and either Equation 1 or 2 of this subpart is used to determine the applicable emissions limit, determine the average O_2 concentration of the air/oxygen mixture supplied to the Claus burner, in percent by volume (dry basis), for the performance test using all hourly average O_2 concentrations determined during the test runs using the procedures in § 60.106a(a)(5) or (6).

* * * * *

■ 7. Section 60.105a is amended by:

■ a. Revising paragraph (b)(1)(i);

■ b. Revising paragraph (b)(1)(ii)(A);

■ c. Revising paragraph (b)(2);
■ d. Revising paragraph (h)(1);
■ e. Revising paragraph (h)(3)(i);
■ f. Revising paragraph (i)(1);
■ g. Redesignating paragraphs (i)(2) through (6) as (i)(3) through (7);
■ h. Adding paragraph (i)(2); and
■ i. Revising newly redesignated paragraph (i)(7).

The revisions and additions read as follows:

§ 60.105a Monitoring of emissions and operations for fluid catalytic cracking units (FCCU) and fluid coking units (FCU).

* * * * *

(b) * * *

(1) * * *

(i) For units controlled using an electrostatic precipitator, the owner or operator shall use CPMS to measure and record the hourly average total power input and secondary current to the entire system.

(ii) * * *

(A) As an alternative to pressure drop, the owner or operator of a jet ejector type wet scrubber or other type of wet scrubber equipped with atomizing spray nozzles must conduct a daily check of the air or water pressure to the spray nozzles and record the results of each check. Faulty (e.g., leaking or plugged) air or water lines must be repaired within 12 hours of identification of an abnormal pressure reading.

* * * * *

(2) For use in determining the coke burn-off rate for an FCCU or FCU, the owner or operator shall install, operate, calibrate, and maintain an instrument for continuously monitoring the concentrations of CO_2, O_2 (dry basis), and if needed, CO in the exhaust gases prior to any control or energy recovery system that burns auxiliary fuels. A CO monitor is not required for determining coke burn-off rate when no auxiliary fuel is burned and a continuous CO monitor is not required in accordance with § 60.105a(h)(3).

(i) The owner or operator shall install, operate, and maintain each CO_2 and O_2 monitor according to Performance Specification 3 of Appendix B to part 60.

(ii) The owner or operator shall conduct performance evaluations of each CO_2 and O_2 monitor according to the requirements in § 60.13(c) and Performance Specification 3 of Appendix B to part 60. The owner or operator shall use Method 3 of Appendix A–3 to part 60 for conducting the relative accuracy evaluations.

(iii) If a CO monitor is required, the owner or operator shall install, operate, and maintain each CO monitor according to Performance Specification 4 or 4A of Appendix B to part 60. If this CO monitor also serves to demonstrate compliance with the CO emissions limit in § 60.102a(b)(4), the span value for this instrument is 1,000 ppm; otherwise, the span value for this instrument should be set at approximately 2 times the typical CO concentration expected in the FCCU of FCU flue gas prior to any emission control or energy recovery system that burns auxiliary fuels.

(iv) If a CO monitor is required, the owner or operator shall conduct performance evaluations of each CO monitor according to the requirements in § 60.13(c) and Performance Specification 4 of Appendix B to part 60. The owner or operator shall use Method 10, 10A, or 10B of Appendix A–3 to part 60 for conducting the relative accuracy evaluations.

(v) The owner or operator shall comply with the quality assurance requirements of procedure 1 of Appendix F to part 60, including quarterly accuracy determinations for CO_2 and CO monitors, annual accuracy determinations for O_2 monitors, and daily calibration drift tests.

* * * * *

(h) * * *

(1) The owner or operator shall install, operate, and maintain each CO monitor according to Performance Specification 4 or 4A of appendix B to part 60. The span value for this instrument is 1,000 ppmv CO.

* * * * *

(3) * * *

(i) The demonstration shall consist of continuously monitoring CO emissions for 30 days using an instrument that meets the requirements of Performance Specification 4 or 4A of appendix B to part 60. The span value shall be 100 ppmv CO instead of 1,000 ppmv, and the relative accuracy limit shall be 10 percent of the average CO emissions or 5 ppmv CO, whichever is greater. For instruments that are identical to Method 10 of appendix A–4 to part 60 and employ the sample conditioning system of Method 10A of appendix A–4 to part 60, the alternative relative accuracy test procedure in section 10.1 of Performance Specification 2 of appendix B to part 60 may be used in place of the relative accuracy test.

* * * * *

(i) * * *

(1) If a CPMS is used according to § 60.105a(b)(1), all 3-hour periods during which the average PM control device operating characteristics, as measured by the continuous monitoring systems under § 60.105a(b)(1), fall below the levels established during the performance test. If the alternative to pressure drop CPMS is used for the owner or operator of a jet ejector type wet scrubber or other type of wet scrubber equipped with atomizing spray nozzles, each day in which abnormal pressure readings are not corrected within 12 hours of identification.

(2) If a bag leak detection system is used according to § 60.105a(c), each day in which the cause of an alarm is not alleviated within the time period specified in § 60.105a(c)(3).

* * * * *

(7) All 1-hour periods during which the average CO concentration as measured by the CO continuous monitoring system under § 60.105a(h) exceeds 500 ppmv or, if applicable, all 1-hour periods during which the average temperature and O_2 concentration as measured by the continuous monitoring systems under § 60.105a(h)(4) fall below the operating limits established during the performance test.

* * * * *

■ 8. Section 60.106a is amended by:
■ a. Revising paragraph (a)(1)(i);
■ b. Adding paragraphs (a)(1)(iv) through (vii);
■ c. Revising paragraph (a)(2) introductory text;
■ d. Revising paragraphs (a)(2)(i) and (ii);
■ e. Revising the first sentence of paragraph (a)(2)(iii);
■ f. Removing paragraphs (a)(2)(iv) and (v);
■ g. Redesignating (a)(2)(vi) through (ix) as (a)(2)(iv) through (vii);
■ h. Revising the first sentence of paragraph (a)(3) introductory text;
■ i. Revising paragraph (a)(3)(i);
■ j. Adding paragraphs (a)(4) through (7); and
■ k. Revising paragraphs (b)(2) and (3).

The revisions and additions read as follows:

§ 60.106a Monitoring of emissions and operations for sulfur recovery plants.

(a) * * *

(1) * * *

(i) The span value for the SO_2 monitor is two times the applicable SO_2 emission limit at the highest O_2 concentration in the air/oxygen stream used in the Claus burner, if applicable.

* * * * *

(iv) The owner or operator shall install, operate, and maintain each O_2 monitor according to Performance Specification 3 of Appendix B to part 60.

(v) The span value for the O_2 monitor must be selected between 10 and 25 percent, inclusive.

(vi) The owner or operator shall conduct performance evaluations for the

O_2 monitor according to the requirements of § 60.13(c) and Performance Specification 3 of Appendix B to part 60. The owner or operator shall use Methods 3, 3A, or 3B of Appendix A–2 to part 60 for conducting the relative accuracy evaluations. The method ANSI/ASME PTC 19.10–1981, ''Flue and Exhaust Gas Analyses,'' (incorporated by reference—see § 60.17) is an acceptable alternative to EPA Method 3B of Appendix A–2 to part 60.

(vii) The owner or operator shall comply with the applicable quality assurance procedures of Appendix F to part 60 for each monitor, including annual accuracy determinations for each O_2 monitor, and daily calibration drift determinations.

(2) For sulfur recovery plants that are subject to the reduced sulfur compounds emission limit in § 60.102a(f)(1)(ii) or § 60.102a(f)(2)(ii), the owner or operator shall install, operate, calibrate, and maintain an instrument for continuously monitoring and recording the concentration of reduced sulfur compounds and O_2 emissions into the atmosphere. The reduced sulfur compounds emissions shall be calculated as SO_2 (dry basis, zero percent excess air).

(i) The span value for the reduced sulfur compounds monitor is two times the applicable reduced sulfur compounds emission limit as SO_2 at the highest O_2 concentration in the air/oxygen stream used in the Claus burner, if applicable.

(ii) The owner or operator shall install, operate, and maintain each reduced sulfur compounds CEMS according to Performance Specification 5 of Appendix B to part 60.

(iii) The owner or operator shall conduct performance evaluations of each reduced sulfur compounds monitor according to the requirements in § 60.13(c) and Performance Specification 5 of Appendix B to part 60. * * *

* * * * *

(3) In place of the reduced sulfur compounds monitor required in paragraph (a)(2) of this section, the owner or operator may install, calibrate, operate, and maintain an instrument using an air or O_2 dilution and oxidation system to convert any reduced sulfur to SO_2 for continuously monitoring and recording the concentration (dry basis, 0 percent excess air) of the total resultant SO_2. * * *

(i) The span value for this monitor is two times the applicable reduced sulfur compounds emission limit as SO_2 at the highest O_2 concentration in the air/oxygen stream used in the Claus burner, if applicable.

* * * * *

(4) For sulfur recovery plants that are subject to the H_2S emission limit in § 60.102a(f)(1)(iii) or § 60.102a(f)(2)(iii), the owner or operator shall install, operate, calibrate, and maintain an instrument for continuously monitoring and recording the concentration of H_2S, and O_2 emissions into the atmosphere. The H_2S emissions shall be calculated as SO_2 (dry basis, zero percent excess air).

(i) The span value for this monitor is two times the applicable H_2S emission limit.

(ii) The owner or operator shall install, operate, and maintain each H_2S CEMS according to Performance Specification 7 of appendix B to part 60.

(iii) The owner or operator shall conduct performance evaluations for each H_2S monitor according to the requirements of § 60.13(c) and Performance Specification 7 of appendix B to part 60. The owner or operator shall use Methods 11 or 15 of appendix A–5 to part 60 or Method 16 of appendix A–6 to part 60 for conducting the relative accuracy evaluations. The method ANSI/ASME PTC 19.10–1981, ''Flue and Exhaust Gas Analyses,'' (incorporated by reference—see § 60.17) is an acceptable alternative to EPA Method 15A of appendix A–5 to part 60.

(iv) The owner or operator shall install, operate, and maintain each O_2 monitor according to Performance Specification 3 of appendix B to part 60.

(v) The span value for the O_2 monitor must be selected between 10 and 25 percent, inclusive.

(vi) The owner or operator shall conduct performance evaluations for the O_2 monitor according to the requirements of § 60.13(c) and Performance Specification 3 of appendix B to part 60. The owner or operator shall use Methods 3, 3A, or 3B of appendix A–2 to part 60 for conducting the relative accuracy evaluations. The method ANSI/ASME PTC 19.10–1981, ''Flue and Exhaust Gas Analyses,'' (incorporated by reference—see § 60.17) is an acceptable alternative to EPA Method 3B of appendix A–2 to part 60.

(vii) The owner or operator shall comply with the applicable quality assurance procedures of appendix F to part 60 for each monitor, including annual accuracy determinations for each O_2 monitor, and daily calibration drift determinations.

(5) For sulfur recovery plants that use oxygen or oxygen enriched air in the Claus burner and that elects to monitor O_2 concentration of the air/oxygen mixture supplied to the Claus burner, the owner or operator shall install, operate, calibrate, and maintain an instrument for continuously monitoring and recording the O_2 concentration of the air/oxygen mixture supplied to the Claus burner in order to determine the allowable emissions limit.

(i) The owner or operator shall install, operate, and maintain each O_2 monitor according to Performance Specification 3 of appendix B to part 60.

(ii) The span value for the O_2 monitor shall be 100 percent.

(iii) The owner or operator shall conduct performance evaluations for the O_2 monitor according to the requirements of § 60.13(c) and Performance Specification 3 of appendix B to part 60. The owner or operator shall use Methods 3, 3A, or 3B of appendix A–2 to part 60 for conducting the relative accuracy evaluations. The method ANSI/ASME PTC 19.10–1981, ''Flue and Exhaust Gas Analyses,'' (incorporated by reference—see § 60.17) is an acceptable alternative to EPA Method 3B of appendix A–2 to part 60.

(iv) The owner or operator shall comply with the applicable quality assurance procedures of appendix F to part 60 for each monitor, including annual accuracy determinations for each O_2 monitor, and daily calibration drift determinations.

(v) The owner or operator shall use the hourly average O_2 concentration from this monitor for use in Equation 1 or 2 of § 60.102a(f), as applicable, for each hour and determine the allowable emission limit as the arithmetic average of 12 contiguous 1-hour averages (i.e., the rolling 12-hour average).

(6) As an alternative to the O_2 monitor required in paragraph (a)(5) of this section, the owner or operator may install, calibrate, operate, and maintain a CPMS to measure and record the volumetric gas flow rate of ambient air and oxygen-enriched gas supplied to the Claus burner and calculate the hourly average O_2 concentration of the air/oxygen mixture used in the Claus burner as specified in paragraphs (a)(6)(i) through (iv) of this section in order to determine the allowable emissions limit as specified in paragraphs (a)(6)(v) of this section.

(i) The owner or operator shall install, calibrate, operate and maintain each flow monitor according to the manufacturer's procedures and specifications and the following requirements.

(A) The owner or operator shall install locate the monitor in a position that

provides a representative measurement of the total gas flow rate.

(B) Use a flow sensor with a measurement sensitivity of no more than 5 percent of the flow rate or 10 cubic feet per minute, whichever is greater.

(C) Use a flow monitor that is maintainable online, is able to continuously correct for temperature, pressure and, for ambient air flow monitor, moisture content, and is able to record dry flow in standard conditions (as defined in § 60.2) over one-minute averages.

(D) At least quarterly, perform a visual inspection of all components of the monitor for physical and operational integrity and all electrical connections for oxidation and galvanic corrosion if the flow monitor is not equipped with a redundant flow sensor.

(E) Recalibrate the flow monitor in accordance with the manufacturer's procedures and specifications biennially (every two years) or at the frequency specified by the manufacturer.

(ii) The owner or operator shall use 20.9 percent as the oxygen content of the ambient air.

(iii) The owner or operator shall use product specifications (e.g., as reported in material safety data sheets) for percent oxygen for purchased oxygen. For oxygen produced onsite, the percent oxygen shall be determined by periodic measurements or process knowledge.

(iv) The owner or operator shall calculate the hourly average O_2 concentration of the air/oxygen mixture used in the Claus burner using Equation 10 of this section:

$$\%O_2 = \left(\frac{20.9 \times Q_{air} + \%O_{2,oxy} \times Q_{oxy}}{Q_{air} + Q_{oxy}} \right) \qquad \text{(Eq. 10)}$$

Where:

$\%O_2$ = O_2 concentration of the air/oxygen mixture used in the Claus burner, percent by volume (dry basis);

20.9 = O_2 concentration in air, percent dry basis;

Q_{air} = Volumetric flow rate of ambient air used in the Claus burner, dscfm;

$\%O_{2,oxy}$ = O_2 concentration in the enriched oxygen stream, percent dry basis; and

Q_{oxy} = Volumetric flow rate of enriched oxygen stream used in the Claus burner, dscfm.

(v) The owner or operator shall use the hourly average O_2 concentration determined using Equation 8 of this section for use in Equation 1 or 2 of § 60.102a(f), as applicable, for each hour and determine the allowable emission limit as the arithmetic average of 12 contiguous 1-hour averages (i.e., the rolling 12-hour average).

(7) Owners or operators of a sulfur recovery plant that elects to comply with the SO_2 emission limit in § 60.102a(f)(1)(i) or § 60.102a(f)(2)(i) or the reduced sulfur compounds emission limit in § 60.102a(f)(1)(ii) or § 60.102a(f)(2)(ii) as a flow rate weighted average for a group of release points from the sulfur recovery plant rather than for each process train or release point individually shall install, calibrate, operate, and maintain a CPMS to measure and record the volumetric gas flow rate of each release point within the group of release points from the sulfur recovery plant as specified in paragraphs (a)(7)(i) through (iv) of this section.

(i) The owner or operator shall install, calibrate, operate and maintain each flow monitor according to the manufacturer's procedures and specifications and the following requirements.

(A) The owner or operator shall install locate the monitor in a position that provides a representative measurement of the total gas flow rate.

(B) Use a flow sensor with a measurement sensitivity of no more than 5 percent of the flow rate or 10 cubic feet per minute, whichever is greater.

(C) Use a flow monitor that is maintainable online, is able to continuously correct for temperature, pressure, and moisture content, and is able to record dry flow in standard conditions (as defined in § 60.2) over one-minute averages.

(D) At least quarterly, perform a visual inspection of all components of the monitor for physical and operational integrity and all electrical connections for oxidation and galvanic corrosion if the flow monitor is not equipped with a redundant flow sensor.

(E) Recalibrate the flow monitor in accordance with the manufacturer's procedures and specifications biennially (every two years) or at the frequency specified by the manufacturer.

(ii) The owner or operator shall correct the flow to 0 percent excess air using Equation 11 of this section:

$$Q_{adj} = Q_{meas} \left[\left(20.9 - \%O_2\right) \Big/ 20.9_c \right] \qquad \text{(Eq. 11)}$$

Where:

Q_{adj} = Volumetric flow rate adjusted to 0 percent excess air, dry standard cubic feet per minute (dscfm);

C_{meas} = Volumetric flow rate measured by the flow meter corrected to dry standard conditions, dscfm;

20.9_c = 20.9 percent O_2 − 0.0 percent O_2 (defined O_2 correction basis), percent;

20.9 = O_2 concentration in air, percent; and

$\%O_2$ = O_2 concentration measured on a dry basis, percent.

(iii) The owner or operator shall calculate the flow weighted average SO_2 or reduced sulfur compounds concentration for each hour using Equation 12 of this section:

$$C_{ave} = \frac{\sum_{n=1}^{N} \left(C_n \times Q_{adj,n}\right)}{\sum_{n=1}^{N} Q_{adj,n}} \qquad \text{(Eq. 12)}$$

Where:

C_{ave} = Flow weighted average concentration of the pollutant, ppmv (dry basis, zero percent excess air). The pollutant is either SO_2 [if complying with the SO_2 emission limit in § 60.102a(f)(1)(i) or § 60.102a(f)(2)(i)] or reduced sulfur compounds [if complying with the reduced sulfur compounds emission limit in § 60.102a(f)(1)(ii) or § 60.102a(f)(2)(ii)];

N = Number of release points within the group of release points from the sulfur recovery plant for which emissions averaging is elected;

C_n = Pollutant concentration in the nth release point within the group of release points from the sulfur recovery plant for which emissions averaging is elected, ppmv (dry basis, zero percent excess air);

$Q_{adj,n}$ = Volumetric flow rate of the nth release point within the group of release points from the sulfur recovery plant for which emissions averaging is elected, dry standard cubic feet per minute (dscfm, adjusted to 0 percent excess air).

(iv) For sulfur recovery plants that use oxygen or oxygen enriched air in the Claus burner, the owner or operator shall use Equation 10 of this section and the hourly emission limits determined in paragraphs (a)(5)(v) or (a)(6)(v) of this section in-place of the pollutant concentration to determine the flow weighted average hourly emission limit for each hour. The allowable emission limit shall be calculated as the arithmetic average of 12 contiguous 1-hour averages (i.e., the rolling 12-hour average).

(b) * * *

(2) All 12-hour periods during which the average concentration of reduced sulfur compounds (as SO_2) as measured by the reduced sulfur compounds continuous monitoring system required under paragraph (a)(2) or (3) of this section exceeds the applicable emission limit; or

(3) All 12-hour periods during which the average concentration of H_2S as measured by the H_2S continuous monitoring system required under paragraph (a)(4) of this section exceeds the applicable emission limit (dry basis, 0 percent excess air).

■ 9. Section 60.107a is amended by:

■ a. Revising paragraphs (a)(1)(i) and (ii);

■ b. Revising paragraph (b)(1)(iv);

■ c. Revising the first sentence of paragraph (b)(3)(iii);

■ d. Revising paragraph (d)(3);

■ e. Revising paragraph (e)(1) introductory text;

■ f. Revising paragraph (e)(1)(ii);

■ g. Revising paragraph (e)(2) introductory text;

■ h. Revising paragraph (e)(2)(ii);

■ i. Revising paragraph (e)(2)(vi)(C);

■ j. Revising paragraph (e)(3); and

■ k. Revising paragraph (h)(5).

The revisions read as follows:

§ 60.107a Monitoring of emissions and operations for fuel gas combustion devices and flares.

(a) * * *

(1) * * *

(i) The owner or operator shall install, operate, and maintain each SO_2 monitor according to Performance Specification 2 of appendix B to part 60. The span value for the SO_2 monitor is 50 ppmv SO_2.

(ii) The owner or operator shall conduct performance evaluations for the SO_2 monitor according to the requirements of § 60.13(c) and Performance Specification 2 of appendix B to part 60. The owner or operator shall use Methods 6, 6A, or 6C of appendix A–4 to part 60 for conducting the relative accuracy evaluations. The method ANSI/ASME PTC 19.10–1981, ''Flue and Exhaust Gas Analyses,'' (incorporated by reference—see § 60.17) is an acceptable alternative to EPA Method 6 or 6A of appendix A–4 to part 60. Samples taken by Method 6 of appendix A–4 to part 60 shall be taken at a flow rate of approximately 2 liters/min for at least 30 minutes. The relative accuracy limit shall be 20 percent or 4 ppmv, whichever is greater, and the calibration drift limit shall be 5 percent of the established span value.

* * * * *

(b) * * *

(1) * * *

(iv) The supporting test results from sampling the requested fuel gas stream/system demonstrating that the sulfur content is less than 5 ppmv H_2S. Sampling data must include, at minimum, 2 weeks of daily monitoring (14 grab samples) for frequently operated fuel gas streams/systems; for infrequently operated fuel gas streams/systems, seven grab samples must be collected unless other additional information would support reduced sampling. The owner or operator shall use detector tubes (''length-of-stain tube'' type measurement) following the ''Gas Processors Association Standard 2377–86, Test for Hydrogen Sulfide and Carbon Dioxide in Natural Gas Using Length of Stain Tubes,'' 1986 Revision (incorporated by reference—see § 60.17), using tubes with a maximum span between 10 and 40 ppmv inclusive when $1 \leq N \leq 10$, where N = number of pump strokes, to test the applicant fuel gas stream for H_2S; and

* * * * *

(3) * * *

(iii) If the operation change results in a sulfur content that is outside the range of concentrations included in the original application and the owner or operator chooses not to submit new information to support an exemption, the owner or operator must begin H_2S monitoring using daily stain sampling to demonstrate compliance using length-of-stain tubes with a maximum span between 200 and 400 ppmv inclusive when $1 \leq N \leq 5$, where N = number of pump strokes. * * *

* * * * *

(d) * * *

(3) As an alternative to the requirements in paragraph (d)(2) of this section, the owner or operator of a gas-fired process heater shall install, operate and maintain a gas composition analyzer and determine the average F factor of the fuel gas using the factors in Table 1 of this subpart and Equation 13 of this section. If a single fuel gas system provides fuel gas to several process heaters, the F factor may be determined at a single location in the fuel gas system provided it is representative of the fuel gas fed to the affected process heater(s).

$$F_d = \frac{1{,}000{,}000 \times \sum \left(X_i \times MEV_i \right)}{\sum \left(X_i \times MHC_i \right)} \qquad \text{(Eq. 13)}$$

Where:

F_d = F factor on dry basis at 0% excess air, dscf/MMBtu.

X_i = mole or volume fraction of each component in the fuel gas.

MEV_i = molar exhaust volume, dry standard cubic feet per mole (dscf/mol).

MHC_i = molar heat content, Btu per mole (Btu/mol).

1,000,000 = unit conversion, Btu per MMBtu.

* * * * *

(e) * * *

(1) *Total reduced sulfur monitoring requirements.* The owner or operator shall install, operate, calibrate and maintain an instrument or instruments for continuously monitoring and

recording the concentration of total reduced sulfur in gas discharged to the flare.

* * * * *

(ii) The owner or operator shall conduct performance evaluations of each total reduced sulfur monitor according to the requirements in § 60.13(c) and Performance Specification 5 of Appendix B to part 60. The owner or operator of each total reduced sulfur monitor shall use EPA Method 15A of Appendix A–5 to part 60 for conducting the relative accuracy evaluations. The method ANSI/ASME PTC 19.10–1981 (incorporated by reference—see § 60.17) is an acceptable alternative to EPA Method 15A of Appendix A–5 to part 60. The alternative relative accuracy procedures described in section 16.0 of Performance Specification 2 of Appendix B to part 60 (cylinder gas audits) may be used for conducting the relative accuracy evaluations, except that it is not necessary to include as much of the sampling probe or sampling line as practical.

* * * * *

(2) *H_2S monitoring requirements.* The owner or operator shall install, operate, calibrate, and maintain an instrument or instruments for continuously monitoring and recording the concentration of H_2S in gas discharged to the flare according to the requirements in paragraphs (e)(2)(i) through (iii) of this section and shall collect and analyze samples of the gas and calculate total sulfur concentrations as specified in paragraphs (e)(2)(iv) through (ix) of this section.

* * * * *

(ii) The owner or operator shall conduct performance evaluations of each H_2S monitor according to the requirements in § 60.13(c) and Performance Specification 7 of Appendix B to part 60. The owner or operator shall use EPA Method 11, 15 or 15A of Appendix A–5 to part 60 for conducting the relative accuracy evaluations. The method ANSI/ASME PTC 19.10–1981 (incorporated by reference—see § 60.17) is an acceptable alternative to EPA Method 15A of Appendix A–5 to part 60. The alternative relative accuracy procedures described in section 16.0 of Performance Specification 2 of Appendix B to part 60 (cylinder gas audits) may be used for conducting the relative accuracy evaluations, except that it is not necessary to include as much of the sampling probe or sampling line as practical.

* * * * *

(vi) * * *

(C) Determine the acceptable range for subsequent weekly samples based on the 95-percent confidence interval for the distribution of daily ratios based on the 10 individual daily ratios using Equation 14 of this section.

$$AR = Ratio_{Avg} \pm 2.262 \times SDev \qquad \text{(Eq. 14)}$$

Where:

AR = Acceptable range of subsequent ratio determinations, unitless.

$Ratio_{Avg}$ = 10-day average total sulfur-to-H_2S concentration ratio, unitless.

2.262 = t-distribution statistic for 95-percent 2-sided confidence interval for 10 samples (9 degrees of freedom).

SDev = Standard deviation of the 10 daily average total sulfur-to-H_2S concentration ratios used to develop the 10-day average total sulfur-to-H_2S concentration ratio, unitless.

* * * * *

(3) *SO_2 monitoring requirements.* The owner or operator shall install, operate, calibrate, and maintain an instrument for continuously monitoring and recording the concentration of SO_2 from a process heater or other fuel gas combustion device that is combusting gas representative of the fuel gas in the flare gas line according to the requirements in paragraph (a)(1) of this section, determine the F factor of the fuel gas at least daily according to the requirements in paragraphs (d)(2) through (4) of this section, determine the higher heating value of the fuel gas at least daily according to the requirements in paragraph (d)(7) of this section, and calculate the total sulfur content (as SO_2) in the fuel gas using Equation 15 of this section.

Where:

TS_{FG} = Total sulfur concentration, as SO_2, in the fuel gas, ppmv.

C_{SO2} = Concentration of SO_2 in the exhaust gas, ppmv (dry basis at 0-percent excess air).

F_d = F factor gas on dry basis at 0-percent excess air, dscf/MMBtu.

HHV_{FG} = Higher heating value of the fuel gas, MMBtu/scf.

* * * * *

(h) * * *

(5) *Daily O_2 limits for fuel gas combustion devices.* Each day during which the concentration of O_2 as measured by the O_2 continuous monitoring system required under paragraph (c)(6) or (d)(8) of this section exceeds the O_2 operating limit or operating curve determined during the most recent biennial performance test.

PART 63—NATIONAL EMISSION STANDARDS FOR HAZARDOUS AIR POLLUTANTS FOR SOURCE CATEGORIES

■ 10. The authority citation for part 63 continues to read as follows:

Authority: 42 U.S.C. 7401, *et seq.*

Subpart A—[Amended]

■ 11. Section 63.14 is amended by:

■ a. Revising paragraph (g)(14);

■ b. Adding paragraphs (g)(95) and (96);

■ c. Adding paragraph (i)(2);

■ d. Adding paragraphs (l)(21) through (23); and

■ e. Adding paragraphs (m)(3) and (s).

The revisions and additions read as follows:

§ 63.14 Incorporation by reference.

* * * * *

(g) * * *

(14) ASTM D1945–03 (Reapproved 2010), Standard Test Method for Analysis of Natural Gas by Gas Chromatography, (Approved January 1, 2010), IBR approved for §§ 63.670(j), 63.772(h), and 63.1282(g).

* * * * *

(95) ASTM D6196–03 (Reapproved 2009), Standard Practice for Selection of Sorbents, Sampling, and Thermal Desorption Analysis Procedures for Volatile Organic Compounds in Air, IBR approved for appendix A to part 63: Method 325A, Sections 1.2 and 6.1, and Method 325B, Sections 1.3, 7.1.2, 7.1.3, and A.1.1.

(96) ASTM UOP539–12, Refinery Gas Analysis by Gas Chromatography, IBR approved for § 63.670(j).

* * * * *

(i) * * *

(2) BS EN 14662–4:2005, Ambient Air Quality: Standard Method for the Measurement of Benzene Concentrations—Part 4: Diffusive Sampling Followed By Thermal Desorption and Gas Chromatography, IBR approved for appendix A to part 63: Method 325A, Section 1.2, and Method 325B, Sections 1.3, 7.1.3, and A.1.1.

* * * * *

(l) * * *

(21) EPA–454/R–99–005, Office of Air Quality Planning and Standards (OAQPS), Meteorological Monitoring

Guidance for Regulatory Modeling Applications, February 2000, IBR approved for appendix A to part 63: Method 325A, Section 8.3.

(22) EPA–454/B–08–002, Office of Air Quality Planning and Standards (OAQPS), Quality Assurance Handbook for Air Pollution Measurement Systems, Volume IV: Meteorological Measurements, Version 2.0 (Final), March 2008, IBR approved for § 63.658(d) and appendix A to part 63: Method 325A, Sections 8.1.4 and 10.0.

(23) EPA–454/B–13–003, Office of Air Quality Planning and Standards (OAQPS), Quality Assurance Handbook for Air Pollution Measurement Systems, Volume II: Ambient Air Quality Monitoring Program, May 2013, IBR approved for § 63.658(c) and appendix A to part 63: Method 325A, Section 4.1.

(m) * * *

(3) ISO 16017–2:2003, Indoor, Ambient and Workplace Air—Sampling and Analysis of Volatile Organic Compounds by Sorbent Tube/Thermal Desorption/Capillary Gas Chromatography—Part 2: Diffusive Sampling, First edition, June 11, 2003, IBR approved for appendix A to part 63: Method 325A, Sections 1.2, 6.1, and 6.5, and Method 325B, Sections 1.3, 7.1.2, 7.1.3, and A.1.1.

* * * * *

(s) U.S. Department of the Interior, 1849 C Street NW., Washington, DC 20240, (202) 208–3100, *www.doi.gov.*

(1) Bulletin 627, Bureau of Mines, Flammability Characteristics of Combustible Gases and Vapors, 1965, IBR approved for § 63.670(l).

(2) [Reserved]

Subpart Y—[Amended]

■ 12. Section 63.560 is amended by revising paragraph (a)(4) to read as follows:

§ 63.560 Applicability and designation of affected source.

(a) * * *

(4) Existing sources with emissions less than 10 and 25 tons must meet the submerged fill standards of 46 CFR 153.282.

* * * * *

Subpart CC—[Amended]

■ 13. Section 63.640 is amended by:

■ a. Revising paragraph (a) introductory text;

■ b. Revising paragraph (c) introductory text;

■ c. Adding paragraph (c)(9);

■ d. Revising paragraph (d)(5);

■ e. Revising paragraph (h);

■ f. Revising paragraph (k)(1);

■ g. Revising paragraph (l) introductory text;

■ h. Revising paragraph (l)(2) introductory text;

■ i. Revising paragraph (l)(2)(i);

■ j. Revising paragraph (l)(3) introductory text;

■ k. Revising paragraph (m) introductory text;

■ l. Revising paragraph (n) introductory text;

■ m. Revising paragraphs (n)(1) through (5);

■ n. Revising paragraph (n)(8) introductory text;

■ o. Revising paragraph (n)(8)(ii);

■ p. Adding paragraphs (n)(8)(vii) and (viii);

■ q. Revising paragraph (n)(9)(i);

■ r. Adding paragraph (n)(10);

■ s. Revising paragraph (o)(2)(i) introductory text;

■ t. Adding paragraph (o)(2)(i)(D);

■ u. Revising paragraph (o)(2)(ii) introductory text;

■ v. Adding paragraph (o)(2)(ii)(C); and

■ w. Revising paragraph (p)(2).

The revisions and additions read as follows:

§ 63.640 Applicability and designation of affected source.

(a) This subpart applies to petroleum refining process units and to related emissions points that are specified in paragraphs (c)(1) through (9) of this section that are located at a plant site and that meet the criteria in paragraphs (a)(1) and (2) of this section:

* * * * *

(c) For the purposes of this subpart, the affected source shall comprise all emissions points, in combination, listed in paragraphs (c)(1) through (c)(9) of this section that are located at a single refinery plant site.

* * * * *

(9) All releases associated with the decoking operations of a delayed coking unit, as defined in this subpart.

* * * * *

(d) * * *

(5) Emission points routed to a fuel gas system, as defined in § 63.641 of this subpart, provided that on and after [THE DATE 3 YEARS AFTER THE DATE OF PUBLICATION OF THE FINAL RULE AMENDMENTS IN THE **FEDERAL REGISTER**], any flares receiving gas from that fuel gas system are in compliance with § 63.670. No other testing, monitoring, recordkeeping, or reporting is required for refinery fuel gas systems or emission points routed to refinery fuel gas systems.

* * * * *

(h) Sources subject to this subpart are required to achieve compliance on or before the dates specified in table 11 of this subpart, except as provided in paragraphs (h)(1) through (3) of this section.

(1) Marine tank vessels at existing sources shall be in compliance with this subpart, except for §§ 63.657 through 63.661, no later than August 18, 1999, unless the vessels are included in an emissions average to generate emission credits. Marine tank vessels used to generate credits in an emissions average shall be in compliance with this subpart no later than August 18, 1998 unless an extension has been granted by the Administrator as provided in § 63.6(i).

(2) Existing Group 1 floating roof storage vessels meeting the applicability criteria in item 1 of the definition of Group 1 storage vessel shall be in compliance with § 63.646 at the first degassing and cleaning activity after August 18, 1998, or August 18, 2005, whichever is first.

(3) An owner or operator may elect to comply with the provisions of § 63.648(c) through (i) as an alternative to the provisions of § 63.648(a) and (b). In such cases, the owner or operator shall comply no later than the dates specified in paragraphs (h)(3)(i) through (h)(3)(iii) of this section.

(i) Phase I (see table 2 of this subpart), beginning on August 18, 1998;

(ii) Phase II (see table 2 of this subpart), beginning no later than August 18, 1999; and

(iii) Phase III (see table 2 of this subpart), beginning no later than February 18, 2001.

* * * * *

(k) * * *

(1) The reconstructed source, addition, or change shall be in compliance with the new source requirements in item (1), (2), or (3) of table 11 of this subpart, as applicable, upon initial startup of the reconstructed source or by August 18, 1995, whichever is later; and

* * * * *

(l) If an additional petroleum refining process unit is added to a plant site or if a miscellaneous process vent, storage vessel, gasoline loading rack, marine tank vessel loading operation, heat exchange system, or decoking operation that meets the criteria in paragraphs (c)(1) through (9) of this section is added to an existing petroleum refinery or if another deliberate operational process change creating an additional Group 1 emissions point(s) (as defined in § 63.641) is made to an existing petroleum refining process unit, and if the addition or process change is not subject to the new source requirements as determined according to paragraphs (i) or (j) of this section, the requirements in paragraphs (l)(1) through (4) of this

section shall apply. Examples of process changes include, but are not limited to, changes in production capacity, or feed or raw material where the change requires construction or physical alteration of the existing equipment or catalyst type, or whenever there is replacement, removal, or addition of recovery equipment. For purposes of this paragraph and paragraph (m) of this section, process changes do not include: Process upsets, unintentional temporary process changes, and changes that are within the equipment configuration and operating conditions documented in the Notification of Compliance Status report required by § 63.655(f).

* * * * *

(2) The added emission point(s) and any emission point(s) within the added or changed petroleum refining process unit shall be in compliance with the applicable requirements in item (4) of table 11 of this subpart by the dates specified in paragraphs (l)(2)(i) or (l)(2)(ii) of this section.

(i) If a petroleum refining process unit is added to a plant site or an emission point(s) is added to any existing petroleum refining process unit, the added emission point(s) shall be in compliance upon initial startup of any added petroleum refining process unit or emission point(s) or by the applicable compliance date in item (4) of table 11 of this subpart, whichever is later.

* * * * *

(3) The owner or operator of a petroleum refining process unit or of a storage vessel, miscellaneous process vent, wastewater stream, gasoline loading rack, marine tank vessel loading operation, heat exchange system, or decoking operation meeting the criteria in paragraphs (c)(1) through (9) of this section that is added to a plant site and is subject to the requirements for existing sources shall comply with the reporting and recordkeeping requirements that are applicable to existing sources including, but not limited to, the reports listed in paragraphs (l)(3)(i) through (vii) of this section. A process change to an existing petroleum refining process unit shall be subject to the reporting requirements for existing sources including, but not limited to, the reports listed in paragraphs (l)(3)(i) through (l)(3)(vii) of this section. The applicable reports include, but are not limited to:

* * * * *

(m) If a change that does not meet the criteria in paragraph (l) of this section is made to a petroleum refining process unit subject to this subpart, and the change causes a Group 2 emission point to become a Group 1 emission point (as defined in § 63.641), then the owner or operator shall comply with the applicable requirements of this subpart for existing sources, as specified in item (4) of table 11 of this subpart, for the Group 1 emission point as expeditiously as practicable, but in no event later than 3 years after the emission point becomes Group 1.

* * * * *

(n) Overlap of subpart CC with other regulations for storage vessels. As applicable, paragraphs (n)(1), (n)(3), (n)(4), (n)(6), and (n)(7) of this section apply for Group 2 storage vessels and paragraphs (n)(2) and (n)(5) of this section apply for Group 1 storage vessels.

(1) After the compliance dates specified in paragraph (h) of this section, a Group 2 storage vessel that is subject to the provisions of 40 CFR part 60, subpart Kb is required to comply only with the requirements of 40 CFR part 60, subpart Kb, except as provided in paragraph (n)(8) of this section. After the compliance dates specified in paragraph (h) of this section, a Group 2 storage vessel that is subject to the provisions of CFR part 61, subpart Y is required to comply only with the requirements of 40 CFR part 60, subpart Y, except as provided in paragraph (n)(10) of this section.

(2) After the compliance dates specified in paragraph (h) of this section, a Group 1 storage vessel that is also subject to 40 CFR part 60, subpart Kb is required to comply only with either 40 CFR part 60, subpart Kb, except as provided in paragraph (n)(8) of this section; or this subpart. After the compliance dates specified in paragraph (h) of this section, a Group 1 storage vessel that is also subject to 40 CFR part 61, subpart Y is required to comply only with either 40 CFR part 61, subpart Y, except as provided in paragraph (n)(10) of this section; or this subpart.

(3) After the compliance dates specified in paragraph (h) of this section, a Group 2 storage vessel that is part of a new source and is subject to 40 CFR 60.110b, but is not required to apply controls by 40 CFR 60.110b or 60.112b, is required to comply only with this subpart.

(4) After the compliance dates specified in paragraph (h) of this section, a Group 2 storage vessel that is part of a new source and is subject to 40 CFR 61.270, but is not required to apply controls by 40 CFR 61.271, is required to comply only with this subpart.

(5) After the compliance dates specified in paragraph (h) of this section, a Group 1 storage vessel that is also subject to the provisions of 40 CFR part 60, subparts K or Ka is required to only comply with the provisions of this subpart.

* * * * *

(8) Storage vessels described by paragraph (n)(1) of this section are to comply with 40 CFR part 60, subpart Kb except as provided in paragraphs (n)(8)(i) through (n)(8)(vi) of this section. Storage vessels described by paragraph (n)(2) electing to comply with part 60, subpart Kb of this chapter shall comply with subpart Kb except as provided in paragraphs (n)(8)(i) through (n)(8)(vii) of this section.

* * * * *

(ii) If the owner or operator determines that it is unsafe to perform the seal gap measurements required in § 60.113b(b) of subpart Kb or to inspect the vessel to determine compliance with § 60.113b(a) of subpart Kb because the roof appears to be structurally unsound and poses an imminent danger to inspecting personnel, the owner or operator shall comply with the requirements in either § 63.120(b)(7)(i) or § 63.120(b)(7)(ii) of subpart G (only up to the compliance date specified in paragraph (h) of this section for compliance with § 63.660, as applicable) or either § 63.1063(c)(2)(iv)(A) or § 63.1063(c)(2)(iv)(B) of subpart WW.

* * * * *

(vii) To be in compliance with § 60.112b(a)(2)(ii) of this chapter, floating roof storage vessels must be equipped with guidepole controls as described in Appendix I: Acceptable Controls for Slotted Guidepoles Under the Storage Tank Emissions Reduction Partnership Program (available at *http://www.epa.gov/ttn/atw/petrefine/petrefpg.html*).

(viii) If a flare is used as a control device for a storage vessel, on and after [THE DATE 3 YEARS AFTER THE DATE OF PUBLICATION OF THE FINAL RULE AMENDMENTS IN THE **FEDERAL REGISTER**], the owner or operator must meet the requirements of § 63.670 instead of the requirements referenced from part 60, subpart Kb of this chapter for that flare.

(9) * * *

(i) If the owner or operator determines that it is unsafe to perform the seal gap measurements required in § 60.113a(a)(1) of subpart Ka because the floating roof appears to be structurally unsound and poses an imminent danger to inspecting personnel, the owner or operator shall comply with the requirements in either § 63.120(b)(7)(i) or § 63.120(b)(7)(ii) of subpart G (only up to the compliance date specified in paragraph (h) of this section for

compliance with § 63.660, as applicable) or either § 63.1063(c)(2)(iv)(A) or § 63.1063(c)(2)(iv)(B) of subpart WW.

* * * * *

(10) Storage vessels described by paragraph (n)(1) of this section are to comply with 40 CFR part 61, subpart Y except as provided in paragraphs (n)(10)(i) through (n)(8)(vi) of this section. Storage vessels described by paragraph (n)(2) electing to comply with 40 CFR part 61, subpart Y shall comply with subpart Y except as provided for in paragraphs (n)(10)(i) through (n)(10)(viii) of this section.

(i) Storage vessels that are to comply with § 61.271(b) of this chapter are exempt from the secondary seal requirements of § 61.271(b)(2)(ii) of this chapter during the gap measurements for the primary seal required by § 61.272(b) of this chapter.

(ii) If the owner or operator determines that it is unsafe to perform the seal gap measurements required in § 61.272(b) of this chapter or to inspect the vessel to determine compliance with § 61.272(a) of this chapter because the roof appears to be structurally unsound and poses an imminent danger to inspecting personnel, the owner or operator shall comply with the requirements in either § 63.120(b)(7)(i) or § 63.120(b)(7)(ii) of subpart G (only up to the compliance date specified in paragraph (h) of this section for compliance with § 63.660, as applicable) or either § 63.1063(c)(2)(iv)(A) or § 63.1063(c)(2)(iv)(B) of subpart WW.

(iii) If a failure is detected during the inspections required by § 61.272(a)(2) of this chapter or during the seal gap measurements required by § 61.272(b)(1) of this chapter, and the vessel cannot be repaired within 45 days and the vessel cannot be emptied within 45 days, the owner or operator may utilize up to two extensions of up to 30 additional calendar days each. The owner or operator is not required to provide a request for the extension to the Administrator.

(iv) If an extension is utilized in accordance with paragraph (n)(10)(iii) of this section, the owner or operator shall, in the next periodic report, identify the vessel, provide the information listed in § 61.272(a)(2) or § 61.272(b)(4)(iii) of this chapter, and describe the nature and date of the repair made or provide the date the storage vessel was emptied.

(v) Owners and operators of storage vessels complying with 40 CFR part 61, subpart Y may submit the inspection reports required by § 61.275(a), (b)(1), and (d) of this chapter as part of the periodic reports required by this subpart, rather than within the 60-day period specified in § 61.275(a), (b)(1), and (d) of this chapter.

(vi) The reports of rim seal inspections specified in § 61.275(d) of this chapter are not required if none of the measured gaps or calculated gap areas exceed the limitations specified in § 61.272(b)(4) of this chapter. Documentation of the inspections shall be recorded as specified in § 61.276(a) of this chapter.

(vii) To be in compliance with § 61.271(b)(3) of this chapter, floating roof storage vessels must be equipped with guidepole controls as described in Appendix I: Acceptable Controls for Slotted Guidepoles Under the Storage Tank Emissions Reduction Partnership Program (available at *http://www.epa.gov/ttn/atw/petrefine/petrefpg.html*).

(viii) If a flare is used as a control device for a storage vessel, on and after [THE DATE 3 YEARS AFTER THE DATE OF PUBLICATION OF THE FINAL RULE AMENDMENTS IN THE **FEDERAL REGISTER**], the owner or operator must meet the requirements of § 63.670 instead of the requirements referenced from part 61, subpart Y of this chapter for that flare.

(o) * * *

(2) * * *

(i) Comply with paragraphs (o)(2)(i)(A) through (D) of this section.

* * * * *

(D) If a flare is used as a control device, on and after [THE DATE 3 YEARS AFTER THE DATE OF PUBLICATION OF THE FINAL RULE AMENDMENTS IN THE **FEDERAL REGISTER**], the flare shall meet the requirements of § 63.670. Prior to [THE DATE 3 YEARS AFTER THE DATE OF PUBLICATION OF THE FINAL RULE AMENDMENTS IN THE **FEDERAL REGISTER**], the flare shall meet the applicable requirements of 40 CFR part 61, subpart FF and subpart G of this part, or the requirements of § 63.670.

(ii) Comply with paragraphs (o)(2)(ii)(A) through (C) of this section.

* * * * *

(C) If a flare is used as a control device, on and after [THE DATE 3 YEARS AFTER THE DATE OF PUBLICATION OF THE FINAL RULE AMENDMENTS IN THE **FEDERAL REGISTER**], the flare shall meet the requirements of § 63.670. Prior to [THE DATE 3 YEARS AFTER THE DATE OF PUBLICATION OF THE FINAL RULE AMENDMENTS IN THE **FEDERAL REGISTER**], the flare shall meet the applicable requirements of 40 CFR part 61, subpart FF and subpart G of this part, or the requirements of § 63.670.

(p) * * *

(2) Equipment leaks that are also subject to the provisions of 40 CFR part 60, subpart GGGa, are required to comply only with the provisions specified in 40 CFR part 60, subpart GGGa. Owners and operators of equipment leaks that are subject to the provisions of 40 CFR part 60, subpart GGGa and subject to this subpart may elect to monitor equipment leaks following the provisions in § 63.661, provided that the equipment is in compliance with all other provisions of 40 CFR part 60, subpart GGGa.

* * * * *

■ 14. Section 63.641 is amended by:

■ a. Adding, in alphabetical order, new definitions of ''Assist air,'' ''Assist steam,'' ''Center steam,'' ''Closed blowdown system,'' ''Combustion zone,'' ''Combustion zone gas,'' ''Decoking operations,'' ''Delayed coking unit,'' ''Flare,'' ''Flare purge gas,'' ''Flare supplemental gas,'' ''Flare sweep gas,'' ''Flare vent gas,'' ''Halogenated vent stream or halogenated stream,'' ''Halogens and hydrogen halides,'' ''Lower steam,'' ''Net heating value,'' ''Perimeter assist air,'' ''Pilot gas,'' ''Premix assist air,'' ''Total steam,'' and ''Upper steam''; and

■ b. Revising the definitions of ''Delayed coker vent,'' ''Emission point,'' ''Group 1 storage vessel,'' ''Miscellaneous process vent,'' ''Periodically discharged,'' and ''Reference control technology for storage vessels''.

The revisions and additions read as follows:

§ 63.641 Definitions.

* * * * *

Assist air means all air that intentionally is introduced prior to or at a flare tip through nozzles or other hardware conveyance for the purposes including, but not limited to, protecting the design of the flare tip, promoting turbulence for mixing or inducing air into the flame. *Assist air* includes premix assist air and perimeter assist air. *Assist air* does not include the surrounding ambient air.

Assist steam means all steam that intentionally is introduced prior to or at a flare tip through nozzles or other hardware conveyance for the purposes including, but not limited to, protecting the design of the flare tip, promoting turbulence for mixing or inducing air into the flame. *Assist steam* includes, but is not necessarily limited to, center steam, lower steam and upper steam.

* * * * *

Center steam means the portion of assist steam introduced into the stack of a flare to reduce burnback.

Closed blowdown system means a system used for depressuring process vessels that is not open to the atmosphere and is configured of piping, ductwork, connections, accumulators/knockout drums, and, if necessary, flow inducing devices that transport gas or vapor from process vessel to a control device or back into the process.

* * * * *

Combustion zone means the area of the flare flame where the combustion zone gas combines for combustion.

Combustion zone gas means all gases and vapors found just after a flare tip. This gas includes all flare vent gas, total steam, and premix air.

* * * * *

Decoking operations means the sequence of steps conducted at the end of the delayed coking unit's cooling cycle to open the coke drum to the atmosphere in order to remove coke from the coke drum. *Decoking operations* begin at the end of the cooling cycle when steam released from the coke drum is no longer discharged via the delayed coker vent to the unit's blowdown system but instead is vented directly to the atmosphere. *Decoking operations* include atmospheric depressuring (venting), deheading, draining, and decoking (coke cutting).

Delayed coker vent means a vent that is typically intermittent in nature, and usually occurs only during the cooling cycle of a delayed coking unit coke drum when vapor from the coke drums cannot be sent to the fractionator column for product recovery, but instead is routed to the atmosphere through the delayed coking unit's blowdown system. The emissions from the decoking operations, which include direct atmospheric venting, deheading, draining, or decoking (coke cutting), are not considered to be *delayed coker vents.*

Delayed coking unit means a refinery process unit in which high molecular weight petroleum derivatives are thermally cracked and petroleum coke is produced in a series of closed, batch system reactors. A *delayed coking unit* includes, but is not limited to, all of the coke drums associated with a single fractionator; the fractionator, including the bottoms receiver and the overhead condenser; the coke drum cutting water and quench system, including the jet pump and coker quench water tank; and the coke drum blowdown recovery compressor system.

* * * * *

Emission point means an individual miscellaneous process vent, storage vessel, wastewater stream, equipment leak, decoking operation or heat exchange system associated with a petroleum refining process unit; an individual storage vessel or equipment leak associated with a bulk gasoline terminal or pipeline breakout station classified under Standard Industrial Classification code 2911; a gasoline loading rack classified under Standard Industrial Classification code 2911; or a marine tank vessel loading operation located at a petroleum refinery.

* * * * *

Flare means a combustion device lacking an enclosed combustion chamber that uses an uncontrolled volume of ambient air to burn gases. For the purposes of this rule, the definition of *flare* includes, but is not necessarily limited to, air-assisted flares, steam-assisted flares and non-assisted flares.

Flare purge gas means gas introduced between a flare header's water seal and the flare tip to prevent oxygen infiltration (backflow) into the flare tip. For a flare with no water seal, the function of *flare purge gas* is performed by flare sweep gas and, therefore, by definition, such a flare has no *flare purge gas.*

Flare supplemental gas means all gas introduced to the flare in order to improve the combustible characteristics of combustion zone gas.

Flare sweep gas means, for a flare with a flare gas recovery system, the minimum amount of gas necessary to maintain a constant flow of gas through the flare header in order to prevent oxygen buildup in the flare header; *flare sweep gas* in these flares is introduced prior to and recovered by the flare gas recovery system. For a flare without a flare gas recovery system, *flare sweep gas* means the minimum amount of gas necessary to maintain a constant flow of gas through the flare header and out the flare tip in order to prevent oxygen buildup in the flare header and to prevent oxygen infiltration (backflow) into the flare tip.

Flare vent gas means all gas found just prior to the flare tip. This gas includes all flare waste gas (*i.e.,* gas from facility operations that is directed to a flare for the purpose of disposing of the gas), flare sweep gas, flare purge gas and flare supplemental gas, but does not include pilot gas, total steam or assist air.

* * * * *

Group 1 storage vessel means:

(1) Prior to [THE DATE OF PUBLICATION OF THE FINAL RULE AMENDMENTS IN THE **FEDERAL REGISTER**]:

(i) A storage vessel at an existing source that has a design capacity greater than or equal to 177 cubic meters and stored-liquid maximum true vapor pressure greater than or equal to 10.4 kilopascals and stored-liquid annual average true vapor pressure greater than or equal to 8.3 kilopascals and annual average HAP liquid concentration greater than 4 percent by weight total organic HAP;

(ii) A storage vessel at a new source that has a design storage capacity greater than or equal to 151 cubic meters and stored-liquid maximum true vapor pressure greater than or equal to 3.4 kilopascals and annual average HAP liquid concentration greater than 2 percent by weight total organic HAP; or

(iii) A storage vessel at a new source that has a design storage capacity greater than or equal to 76 cubic meters and less than 151 cubic meters and stored-liquid maximum true vapor pressure greater than or equal to 77 kilopascals and annual average HAP liquid concentration greater than 2 percent by weight total organic HAP.

(2) On and after [THE DATE OF PUBLICATION OF THE FINAL RULE AMENDMENTS IN THE **FEDERAL REGISTER**]:

(i) A storage vessel at an existing source that has a design capacity greater than or equal to 151 cubic meters (40,000 gallons) and stored-liquid maximum true vapor pressure greater than or equal to 5.2 kilopascals (0.75 pounds per square inch) and annual average HAP liquid concentration greater than 4 percent by weight total organic HAP;

(ii) A storage vessel at an existing source that has a design storage capacity greater than or equal to 76 cubic meters (20,000 gallons) and less than 151 cubic meters (40,000 gallons) and stored-liquid maximum true vapor pressure greater than or equal to 13.1 kilopascals (1.9 pounds per square inch) and annual average HAP liquid concentration greater than 4 percent by weight total organic HAP;

(iii) A storage vessel at a new source that has a design storage capacity greater than or equal to 151 cubic meters (40,000 gallons) and stored-liquid maximum true vapor pressure greater than or equal to 3.4 kilopascals (0.5 pounds per square inch) and annual average HAP liquid concentration greater than 2 percent by weight total organic HAP; or

(iv) A storage vessel at a new source that has a design storage capacity greater than or equal to 76 cubic meters (20,000 gallons) and less than 151 cubic meters (40,000 gallons) and stored-liquid maximum true vapor pressure greater than or equal to 13.1 kilopascals (1.9 pounds per square inch) and annual average HAP liquid concentration

greater than 2 percent by weight total organic HAP.

* * * * *

Halogenated vent stream or *halogenated stream* means a stream determined to have a mass rate of halogen atoms of 0.45 kilograms per hour or greater, determined by the procedures presented in § 63.115(d)(2)(v). The following procedures may be used as alternatives to the procedures in § 63.115(d)(2)(v)(A):

(1) Process knowledge that halogen or hydrogen halides are present in a vent stream and that the vent stream is halogenated, or

(2) Concentration of compounds containing halogen and hydrogen halides measured by Method 26 or 26A of part 60, Appendix A–8 of this chapter, or

(3) Concentration of compounds containing hydrogen halides measured by Method 320 of Appendix A of this part.

Halogens and *hydrogen halides* means hydrogen chloride (HCl), chlorine (Cl_2), hydrogen bromide (HBr), bromine (Br_2), and hydrogen fluoride (HF).

* * * * *

Lower steam means the portion of assist steam piped to an exterior annular ring near the lower part of a flare tip, which then flows through tubes to the flare tip, and ultimately exits the tubes at the flare tip.

* * * * *

Miscellaneous process vent means a gas stream containing greater than 20 parts per million by volume organic HAP that is continuously or periodically discharged from a petroleum refining process unit meeting the criteria specified in § 63.640(a). *Miscellaneous process vents* include gas streams that are discharged directly to the atmosphere, gas streams that are routed to a control device prior to discharge to the atmosphere, or gas streams that are diverted through a product recovery device prior to control or discharge to the atmosphere. *Miscellaneous process vents* include vent streams from: caustic wash accumulators, distillation tower condensers/accumulators, flash/knockout drums, reactor vessels, scrubber overheads, stripper overheads, vacuum pumps, steam ejectors, hot wells, high point bleeds, wash tower overheads, water wash accumulators, blowdown condensers/accumulators, and delayed coker vents. *Miscellaneous process vents* do not include:

(1) Gaseous streams routed to a fuel gas system, provided that on and after [THE DATE 3 YEARS AFTER THE DATE OF PUBLICATION OF THE FINAL RULE AMENDMENTS IN THE **FEDERAL REGISTER**], any flares receiving gas from the fuel gas system are in compliance with § 63.670;

(2) Relief valve discharges regulated under § 63.648;

(3) Leaks from equipment regulated under § 63.648;

(4) [Reserved];

(5) In situ sampling systems (onstream analyzers) until [THE DATE 3 YEARS AFTER THE DATE OF PUBLICATION OF THE FINAL RULE AMENDMENTS IN THE **FEDERAL REGISTER**]. After this date, these sampling systems will be included in the definition of miscellaneous process vents;

(6) Catalytic cracking unit catalyst regeneration vents;

(7) Catalytic reformer regeneration vents;

(8) Sulfur plant vents;

(9) Vents from control devices such as scrubbers, boilers, incinerators, and electrostatic precipitators applied to catalytic cracking unit catalyst regeneration vents, catalytic reformer regeneration vents, and sulfur plant vents;

(10) Vents from any stripping operations applied to comply with the wastewater provisions of this subpart, subpart G of this part, or 40 CFR part 61, subpart FF;

(11) Emissions associated with delayed coking unit decoking operations;

(12) Vents from storage vessels;

(13) Emissions from wastewater collection and conveyance systems including, but not limited to, wastewater drains, sewer vents, and sump drains; and

(14) Hydrogen production plant vents through which carbon dioxide is removed from process streams or through which steam condensate produced or treated within the hydrogen plant is degassed or deaerated.

Net heating value means the energy released as heat when a compound undergoes complete combustion with oxygen to form gaseous carbon dioxide and gaseous water (also referred to as lower heating value).

* * * * *

Perimeter assist air means the portion of assist air introduced at the perimeter of the flare tip or above the flare tip. *Perimeter assist air* includes air intentionally entrained in lower and upper steam. *Perimeter assist air* includes all assist air except premix assist air.

Periodically discharged means discharges that are intermittent and associated with routine operations, maintenance activities, startups, shutdowns, malfunctions, or process upsets.

* * * * *

Pilot gas means gas introduced into a flare tip that provides a flame to ignite the flare vent gas.

* * * * *

Premix assist air means the portion of assist air that is introduced to the flare vent gas prior to the flare tip. *Premix assist air* also includes any air intentionally entrained in center steam.

* * * * *

Reference control technology for storage vessels means either:

(1) For Group 1 storage vessels complying with § 63.660:

(i) An internal floating roof meeting the specifications of §§ 63.1063(a)(1)(i) and (b);

(ii) An external floating roof meeting the specifications of § 63.1063(a)(1)(ii), (a)(2), and (b);

(iii) An external floating roof converted to an internal floating roof meeting the specifications of § 63.1063(a)(1)(i) and (b); or

(iv) A closed-vent system to a control device that reduces organic HAP emissions by 95 percent, or to an outlet concentration of 20 parts per million by volume (ppmv).

(v) For purposes of emissions averaging, these four technologies are considered equivalent.

(2) For all other storage vessels:

(i) An internal floating roof meeting the specifications of § 63.119(b) of subpart G except for § 63.119(b)(5) and (b)(6);

(ii) An external floating roof meeting the specifications of § 63.119(c) of subpart G except for § 63.119(c)(2);

(iii) An external floating roof converted to an internal floating roof meeting the specifications of § 63.119(d) of subpart G except for § 63.119(d)(2); or

(iv) A closed-vent system to a control device that reduces organic HAP emissions by 95 percent, or to an outlet concentration of 20 parts per million by volume.

(v) For purposes of emissions averaging, these four technologies are considered equivalent.

* * * * *

Total steam means the total of all steam that is supplied to a flare and includes, but is not limited to, lower steam, center steam and upper steam.

Upper steam means the portion of assist steam introduced via nozzles located on the exterior perimeter of the upper end of the flare tip.

* * * * *

■ 15. Section 63.642 is amended by:

■ a. Adding paragraph (b);

■ b. Revising paragraph (d)(3);

■ c. Revising paragraph (e);
■ d. Revising paragraph (i);
■ e. Revising paragraph (k) introductory text;
■ f. Revising paragraph (k)(1);
■ g. Revising paragraph (l) introductory text;
■ h. Revising paragraph (l)(2); and
■ i. Adding paragraph (n).

The revisions and additions read as follows:

§ 63.642 General standards.

* * * * *

(b) The emission standards set forth in this subpart shall apply at all times.

* * * * *

(d) * * *

(3) Performance tests shall be conducted at maximum representative operating capacity for the process. During the performance test, an owner or operator shall operate the control device at either maximum or minimum representative operating conditions for monitored control device parameters, whichever results in lower emission reduction. An owner or operator shall not conduct a performance test during startup, shutdown, periods when the control device is bypassed or periods when the process, monitoring equipment or control device is not operating properly. The owner/operator may not conduct performance tests during periods of malfunction. The owner or operator must record the process information that is necessary to document operating conditions during the test and include in such record an explanation to support that the test was conducted at maximum representative operating capacity. Upon request, the owner or operator shall make available to the Administrator such records as may be necessary to determine the conditions of performance tests.

* * * * *

(e) All applicable records shall be maintained as specified in § 63.655(i).

* * * * *

(i) The owner or operator of an existing source shall demonstrate compliance with the emission standard in paragraph (g) of this section by following the procedures specified in paragraph (k) of this section for all emission points, or by following the emissions averaging compliance approach specified in paragraph (l) of this section for specified emission points and the procedures specified in paragraph (k)(1) of this section.

* * * * *

(k) The owner or operator of an existing source may comply, and the owner or operator of a new source shall comply, with the applicable provisions in §§ 63.643 through 63.645, 63.646 or 63.660, 63.647, 63.650, and 63.651, as specified in § 63.640(h).

(1) The owner or operator using this compliance approach shall also comply with the requirements of §§ 63.648 and/or 63.649 or 63.661, 63.654, 63.655, 63.657, 63.658, 63.670 and 63.671, as applicable.

* * * * *

(l) The owner or operator of an existing source may elect to control some of the emission points within the source to different levels than specified under §§ 63.643 through 63.645, 63.646 or 63.660, 63.647, 63.650, and 63.651, as applicable according to § 63.640(h), by using an emissions averaging compliance approach as long as the overall emissions for the source do not exceed the emission level specified in paragraph (g) of this section. The owner or operator using emissions averaging shall meet the requirements in paragraphs (l)(1) and (2) of this section.

* * * * *

(2) Comply with the requirements of §§ 63.648 and/or 63.649 or 63.661, 63.654, 63.652, 63.653, 63.655, 63.657, 63.658, 63.670 and 63.671, as applicable.

* * * * *

(n) At all times, the owner or operator must operate and maintain any affected source, including associated air pollution control equipment and monitoring equipment, in a manner consistent with safety and good air pollution control practices for minimizing emissions. The general duty to minimize emissions does not require the owner operator to make any further efforts to reduce emissions if levels required by the applicable standard have been achieved. Determination of whether a source is operating in compliance with operation and maintenance requirements will be based on information available to the Administrator which may include, but is not limited to, monitoring results, review of operation and maintenance procedures, review of operation and maintenance records, and inspection of the source.

■ 16. Section 63.643 is amended by revising paragraph (a)(1) to read as follows:

§ 63.643 Miscellaneous process vent provisions.

(a) * * *

(1) Reduce emissions of organic HAP's using a flare. On and after [THE DATE 3 YEARS AFTER THE DATE OF PUBLICATION OF THE FINAL RULE AMENDMENTS IN THE **FEDERAL REGISTER**], the flare shall meet the requirements of § 63.670. Prior to [THE DATE 3 YEARS AFTER THE DATE OF PUBLICATION OF THE FINAL RULE AMENDMENTS IN THE **FEDERAL REGISTER**], the flare shall meet the requirements of § 63.11(b) of subpart A or the requirements of § 63.670.

* * * * *

■ 17. Section 63.644 is amended by:
■ a. Revising paragraph (a) introductory text;
■ b. Revising paragraph (a)(2); and
■ c. Revising paragraph (c).

The revisions read as follows:

§ 63.644 Monitoring provisions for miscellaneous process vents.

(a) Except as provided in paragraph (b) of this section, each owner or operator of a Group 1 miscellaneous process vent that uses a combustion device to comply with the requirements in § 63.643(a) shall install the monitoring equipment specified in paragraph (a)(1), (a)(2), (a)(3), or (a)(4) of this section, depending on the type of combustion device used. All monitoring equipment shall be installed, calibrated, maintained, and operated according to manufacturer's specifications or other written procedures that provide adequate assurance that the equipment will monitor accurately and must meet the applicable minimum accuracy, calibration and quality control requirements specified in table 13 of this subpart.

* * * * *

(2) Where a flare is used prior to [THE DATE 3 YEARS AFTER THE DATE OF PUBLICATION OF THE FINAL RULE AMENDMENTS IN THE **FEDERAL REGISTER**], a device (including but not limited to a thermocouple, an ultraviolet beam sensor, or an infrared sensor) capable of continuously detecting the presence of a pilot flame is required, or the requirements of § 63.670 shall be met. Where a flare is used on and after [THE DATE 3 YEARS AFTER THE DATE OF PUBLICATION OF THE FINAL RULE AMENDMENTS IN THE **FEDERAL REGISTER**], the requirements of § 63.670 shall be met.

* * * * *

(c) The owner or operator of a Group 1 miscellaneous process vent using a vent system that contains bypass lines that could divert a vent stream away from the control device used to comply with paragraph (a) of this section shall comply with either paragraph (c)(1) or (2) of this section. Use of the bypass at any time to divert a Group 1 miscellaneous process vent stream is an emissions standards violation. Equipment such as low leg drains and equipment subject to § 63.648 are not subject to this paragraph.

(1) Install, operate, calibrate, and maintain a continuous parameter monitoring system for flow, as specified in paragraphs (c)(1)(i) through (iii) of this section.

(i) Install a continuous parameter monitoring system for flow at the entrance to any bypass line. The continuous parameter monitoring system must record the volume of the gas stream that bypassed the control device and must meet the applicable minimum accuracy, calibration and quality control requirements specified in table 13 of this subpart.

(ii) Equip the continuous parameter monitoring system for flow with an alarm system that will alert an operator immediately and automatically when flow is detected in the bypass line. Locate the alarm such that an operator can easily detect and recognize the alert.

(iii) Reports and records shall be generated as specified in § 63.655(g) and (i).

(2) Secure the bypass line valve in the non-diverting position with a car-seal or a lock-and-key type configuration. A visual inspection of the seal or closure mechanism shall be performed at least once every month to ensure that the valve is maintained in the non-diverting position and that the vent stream is not diverted through the bypass line.

* * * * *

■ 18. Section 63.645 is amended by revising paragraphs (e)(1) and (f)(2) to read as follows:

§ 63.645 Test methods and procedures for miscellaneous process vents.

* * * * *

(e) * * *

(1) Methods 1 or 1A of 40 CFR part 60, Appendix A–1, as appropriate, shall be used for selection of the sampling site. For vents smaller than 0.10 meter in diameter, sample at the center of the vent.

* * * * *

(f) * * *

(2) The gas volumetric flow rate shall be determined using Methods 2, 2A, 2C, 2D, or 2F of 40 CFR part 60, Appendix A–1 or Method 2G of 40 CFR part 60, Appendix A–2, as appropriate.

* * * * *

■ 19. Section 63.646 is amended by:

■ a. Adding introductory text to § 63.646; and

■ b. Revising paragraph (b)(2).

The revisions and additions read as follows:

§ 63.646 Storage vessel provisions.

Upon a demonstration of compliance with the standards in § 63.660 by the compliance dates specified in § 63.640(h), the standards in this section shall no longer apply.

* * * * *

(b) * * *

(2) When an owner or operator and the Administrator do not agree on whether the annual average weight percent organic HAP in the stored liquid is above or below 4 percent for a storage vessel at an existing source or above or below 2 percent for a storage vessel at a new source, an appropriate method (based on the type of liquid stored) as published by EPA or a consensus-based standards organization shall be used. Consensus-based standards organizations include, but are not limited to, the following: ASTM International (100 Barr Harbor Drive, P.O. Box CB700, West Conshohocken, Pennsylvania 19428–B2959, (800) 262–1373, *http://www.astm.org*), the American National Standards Institute (ANSI, 1819 L Street NW., 6th Floor, Washington, DC 20036, (202) 293–8020, *http://www.ansi.org*), the American Gas Association (AGA, 400 North Capitol Street NW., 4th Floor, Washington, DC 20001, (202) 824–7000, *http://www.aga.org*), the American Society of Mechanical Engineers (ASME, Three Park Avenue, New York, NY 10016–5990, (800) 843–2763, *http://www.asme.org*), the American Petroleum Institute (API, 1220 L Street NW., Washington, DC 20005–4070, (202) 682–8000, *http://www.api.org*), and the North American Energy Standards Board (NAESB, 801 Travis Street, Suite 1675, Houston, TX 77002, (713) 356–0060, *http://www.naesb.org*).

* * * * *

■ 20. Section 63.647 is amended by:

■ a. Revising paragraph (a);

■ b. Redesignating paragraph (c) as paragraph (d); and

■ c. Adding paragraph (c).

The revisions and additions read as follows:

§ 63.647 Wastewater provisions.

(a) Except as provided in paragraphs (b) and (c) of this section, each owner or operator of a Group 1 wastewater stream shall comply with the requirements of §§ 61.340 through 61.355 of this chapter for each process wastewater stream that meets the definition in § 63.641.

* * * * *

(c) If a flare is used as a control device, on and after [THE DATE 3 YEARS AFTER THE DATE OF PUBLICATION OF THE FINAL RULE AMENDMENTS IN THE **FEDERAL REGISTER**], the flare shall meet the requirements of § 63.670. Prior to [THE DATE 3 YEARS AFTER THE DATE OF PUBLICATION OF THE FINAL RULE AMENDMENTS IN THE **FEDERAL REGISTER**], the flare shall meet the applicable requirements of part 61, subpart FF of this chapter, or the requirements of § 63.670.

* * * * *

■ 21. Section 63.648 is amended by:

■ a. Revising paragraph (a) introductory text;

■ b. Adding paragraphs (a)(3) and (4);

■ c. Revising paragraph (c) introductory text;

■ d. Revising paragraph (c)(2)(ii);

■ e. Adding paragraphs (c)(11) and (12); and

■ f. Adding paragraph (j).

The revisions and additions read as follows:

§ 63.648 Equipment leak standards.

(a) Each owner or operator of an existing source subject to the provisions of this subpart shall comply with the provisions of part 60, subpart VV of this chapter and paragraph (b) of this section except as provided in paragraphs (a)(1), (a)(2), and (c) through (i) of this section. Each owner or operator of a new source subject to the provisions of this subpart shall comply with subpart H of this part except as provided in paragraphs (c) through (i) of this section. As an alternative to the monitoring requirements of part 60, subpart VV of this chapter or subpart H of this part, as applicable, the owner or operator may elect to monitor equipment leaks following the provisions in § 63.661.

* * * * *

(3) On and after [THE DATE OF PUBLICATION OF THE FINAL RULE AMENDMENTS IN THE **FEDERAL REGISTER**], for the purpose of complying with the requirements of § 60.482–6(a)(2) of this chapter, the term ''seal'' or ''sealed'' means that instrument monitoring of the open-ended valve or line conducted according to the method specified in § 60.485(b) and, as applicable, § 60.485(c) of this chapter indicates no readings of 500 parts per million or greater.

(4) If a flare is used as a control device, on and after [THE DATE 3 YEARS AFTER THE DATE OF PUBLICATION OF THE FINAL RULE AMENDMENTS IN THE **FEDERAL REGISTER**], the flare shall meet the requirements of § 63.670. Prior to [THE DATE 3 YEARS AFTER THE DATE OF PUBLICATION OF THE FINAL RULE AMENDMENTS IN THE **FEDERAL REGISTER**], the flare shall meet the applicable requirements of part 60, subpart VV of this chapter, or the requirements of § 63.670.

* * * * *

(c) In lieu of complying with the existing source provisions of paragraph (a) in this section, an owner or operator may elect to comply with the requirements of §§ 63.161 through 63.169, 63.171, 63.172, 63.175, 63.176, 63.177, 63.179, and 63.180 of subpart H of this part except as provided in paragraphs (c)(1) through (c)(12) and (e) through (i) of this section.

* * * * *

(2) * * *

(ii) If an owner or operator elects to monitor connectors according to the provisions of § 63.649, paragraphs (b), (c), or (d), then the owner or operator shall monitor valves at the frequencies specified in table 9 of this subpart. If an owner or operator elects to comply with § 63.649, the owner or operator cannot also elect to comply with § 63.661.

* * * * *

(11) On and after [THE DATE OF PUBLICATION OF THE FINAL RULE AMENDMENTS IN THE **FEDERAL REGISTER**], for the purpose of complying with the requirements of § 63.167(a)(2), the term ''seal'' or ''sealed'' means that instrument monitoring of the open-ended valve or line conducted according to the method specified in § 63.180(b) and, as applicable, § 63.180(c) of this chapter indicates no readings of 500 parts per million or greater.

(12) If a flare is used as a control device, on and after [THE DATE 3 YEARS AFTER THE DATE OF PUBLICATION OF THE FINAL RULE AMENDMENTS IN THE **FEDERAL REGISTER**], the flare shall meet the requirements of § 63.670. Prior to [THE DATE 3 YEARS AFTER THE DATE OF PUBLICATION OF THE FINAL RULE AMENDMENTS IN THE **FEDERAL REGISTER**], the flare shall meet the applicable requirements of §§ 63.172 and 63.180, or the requirements of § 63.670.

* * * * *

(j) Except as specified in paragraph (j)(4) of this section, the owner or operator must comply with the requirements specified in paragraphs (j)(1) and (2) of this section for relief valves in organic HAP gas or vapor service instead of the pressure relief device requirements of § 60.482–4 or § 63.165, as applicable. Except as specified in paragraph (j)(4) of this section, the owner or operator must also comply with the requirements specified in paragraph (j)(3) of this section for all relief valves in organic HAP service.

(1) *Operating requirements.* Except during a pressure release, operate each relief valve in organic HAP gas or vapor service with an instrument reading of less than 500 ppm above background as detected by Method 21 of 40 CFR part 60, Appendix A–7.

(2) *Pressure release requirements.* For relief valves in organic HAP gas or vapor service, the owner or operator must comply with either paragraph (j)(2)(i) or (ii) of this section following a pressure release.

(i) If the relief valve does not consist of or include a rupture disk, conduct instrument monitoring, as specified in § 60.485(b) or § 63.180(c), as applicable, no later than 5 calendar days after the relief valve returns to organic HAP gas or vapor service following a pressure release to verify that the relief valve is operating with an instrument reading of less than 500 ppm.

(ii) If the relief valve consists of or includes a rupture disk, install a replacement disk as soon as practicable after a pressure release, but no later than 5 calendar days after the pressure release. The owner or operator must also conduct instrument monitoring, as specified in § 60.485(b) or § 63.180(c), as applicable, no later than 5 calendar days after the relief valve returns to organic HAP gas or vapor service following a pressure release to verify that the relief valve is operating with an instrument reading of less than 500 ppm.

(3) *Pressure release management.* Except as specified in paragraph (j)(4) of this section, emissions of organic HAP may not be discharged to the atmosphere from relief valves in organic HAP service, and on or before [THE DATE 3 YEARS AFTER THE DATE OF PUBLICATION OF THE FINAL RULE AMENDMENTS IN THE **FEDERAL REGISTER**], the owner or operator shall comply with the requirements specified in paragraphs (j)(3)(i) and (ii) of this section for all relief valves in organic HAP service.

(i) The owner or operator must equip each relief valve in organic HAP service with a device(s) or use a monitoring system that is capable of: (1) Identifying the pressure release; (2) recording the time and duration of each pressure release; and (3) notifying operators immediately that a pressure release is occurring. The device or monitoring system may be either specific to the pressure relief device itself or may be associated with the process system or piping, sufficient to indicate a pressure release to the atmosphere. Examples of these types of devices and systems include, but are not limited to, a rupture disk indicator, magnetic sensor, motion detector on the pressure relief valve stem, flow monitor, or pressure monitor.

(ii) If any relief valve in organic HAP service vents or releases to atmosphere as a result of a pressure release event, the owner or operator must calculate the quantity of organic HAP released during each pressure release event and report this quantity as required in § 63.655(g)(10)(iii). Calculations may be based on data from the relief valve monitoring alone or in combination with process parameter monitoring data and process knowledge.

(4) *Relief valves routed to a control device.* If all releases and potential leaks from a relief valve in organic HAP service are routed through a closed vent system to a control device, the owner or operator is not required to comply with paragraphs (j)(1), (2) or (3) (if applicable) of this section. Both the closed vent system and control device (if applicable) must meet the requirements of § 63.644. When complying with this paragraph, all references to ''Group 1 miscellaneous process vent'' in 63.644 mean ''relief valve.''

■ 22. Section 63.650 is amended by revising paragraph (a) and adding paragraph (d) to read as follows:

§ 63.650 Gasoline loading rack provisions.

(a) Except as provided in paragraphs (b) through (d) of this section, each owner or operator of a Group 1 gasoline loading rack classified under Standard Industrial Classification code 2911 located within a contiguous area and under common control with a petroleum refinery shall comply with subpart R, §§ 63.421, 63.422(a) through (c) and (e), 63.425(a) through (c) and (i), 63.425(e) through (h), 63.427(a) and (b), and 63.428(b), (c), (g)(1), (h)(1) through (3), and (k).

* * * * *

(d) If a flare is used as a control device, on and after [THE DATE 3 YEARS AFTER THE DATE OF PUBLICATION OF THE FINAL RULE AMENDMENTS IN THE **FEDERAL REGISTER**], the flare shall meet the requirements of § 63.670. Prior to [THE DATE 3 YEARS AFTER THE DATE OF PUBLICATION OF THE FINAL RULE AMENDMENTS IN THE **FEDERAL REGISTER**], the flare shall meet the applicable requirements of subpart R of this part, or the requirements of § 63.670.

■ 23. Section 63.651 is amended by revising paragraph (a) and adding paragraph (e) to read as follows:

§ 63.651 Marine tank vessel loading operation provisions.

(a) Except as provided in paragraphs (b) through (e) of this section, each owner or operator of a marine tank vessel loading operation located at a petroleum refinery shall comply with

the requirements of §§ 63.560 through 63.568.

* * * * *

(e) If a flare is used as a control device, on and after [THE DATE 3 YEARS AFTER THE DATE OF PUBLICATION OF THE FINAL RULE AMENDMENTS IN THE **FEDERAL REGISTER**], the flare shall meet the requirements of § 63.670. Prior to [THE DATE 3 YEARS AFTER THE DATE OF PUBLICATION OF THE FINAL RULE AMENDMENTS IN THE **FEDERAL REGISTER**], the flare shall meet the applicable requirements of subpart Y of this part, or the requirements of § 63.670.

■ 24. Section 63.652 is amended by:

■ a. Revising paragraph (a);

■ b. Removing and reserving paragraph (f)(2);

■ c. Revising paragraph (g)(2)(iii)(B)(*1*);

■ d. Revising paragraph (h)(3);

■ e. Revising paragraph (k) introductory text; and

■ f. Revising paragraph (k)(3).

The revisions and additions read as follows:

§ 63.652 Emissions averaging provisions.

(a) This section applies to owners or operators of existing sources who seek to comply with the emission standard in § 63.642(g) by using emissions averaging according to § 63.642(l) rather than following the provisions of §§ 63.643 through 63.645, 63.646 or 63.660, 63.647, 63.650, and 63.651. Existing marine tank vessel loading operations located at the Valdez Marine Terminal source may not comply with the standard by using emissions averaging.

* * * * *

(g) * * *

(2) * * *

(iii) * * *

(B) * * *

(*1*) The percent reduction shall be measured according to the procedures in § 63.116 of subpart G if a combustion control device is used. For a flare meeting the criteria in § 63.116(a) of subpart G or § 63.670 of this subpart, as applicable, or a boiler or process heater meeting the criteria in § 63.645(d) of this subpart or § 63.116(b) of subpart G, the percentage of reduction shall be 98 percent. If a noncombustion control device is used, percentage of reduction shall be demonstrated by a performance test at the inlet and outlet of the device, or, if testing is not feasible, by a control design evaluation and documented engineering calculations.

* * * * *

(h) * * *

(3) Emissions from storage vessels shall be determined as specified in § 63.150(h)(3) of subpart G, except as follows:

(i) For storage vessels complying with § 63.646:

(A) All references to § 63.119(b) in § 63.150(h)(3) of subpart G shall be replaced with: § 63.119(b) or § 63.119(b) except for § 63.119(b)(5) and (b)(6).

(B) All references to § 63.119(c) in § 63.150(h)(3) of subpart G shall be replaced with: § 63.119(c) or § 63.119(c) except for § 63.119(c)(2).

(C) All references to § 63.119(d) in § 63.150(h)(3) of subpart G shall be replaced with: § 63.119(d) or § 63.119(d) except for § 63.119(d)(2).

(ii) For storage vessels complying with § 63.660:

(A) Sections 63.1063(a)(1)(i), (a)(2), and (b) or §§ 63.1063(a)(1)(i) and (b) shall apply instead of § 63.119(b) in § 63.150(h)(3) of subpart G.

(B) Sections 63.1063(a)(1)(ii), (a)(2), and (b) shall apply instead of § 63.119(c) in § 63.150(h)(3) of subpart G.

(C) Sections 63.1063(a)(1)(i), (a)(2), and (b) or §§ 63.1063(a)(1)(i) and (b) shall apply instead of § 63.119(d) in § 63.150(h)(3) of subpart G.

* * * * *

(k) The owner or operator shall demonstrate that the emissions from the emission points proposed to be included in the average will not result in greater hazard or, at the option of the State or local permitting authority, greater risk to human health or the environment than if the emission points were controlled according to the provisions in §§ 63.643 through 63.645, 63.646 or 63.660, 63.647, 63.650, and 63.651, as applicable.

* * * * *

(3) An emissions averaging plan that does not demonstrate an equivalent or lower hazard or risk to the satisfaction of the State or local permitting authority shall not be approved. The State or local permitting authority may require such adjustments to the emissions averaging plan as are necessary in order to ensure that the average will not result in greater hazard or risk to human health or the environment than would result if the emission points were controlled according to §§ 63.643 through 63.645, 63.646 or 63.660, 63.647, 63.650, and 63.651, as applicable.

* * * * *

■ 25. Section 63.653 is amended by:

■ a. Revising paragraph (a) introductory text;

■ b. Revising paragraphs (a)(3)(i) and (ii); and

■ c. Revising paragraph (a)(7).

The revisions read as follows:

§ 63.653 Monitoring, recordkeeping, and implementation plan for emissions averaging.

(a) For each emission point included in an emissions average, the owner or operator shall perform testing, monitoring, recordkeeping, and reporting equivalent to that required for Group 1 emission points complying with §§ 63.643 through 63.645, 63.646 or 63.660, 63.647, 63.650, and 63.651, as applicable. The specific requirements for miscellaneous process vents, storage vessels, wastewater, gasoline loading racks, and marine tank vessels are identified in paragraphs (a)(1) through (7) of this section.

* * * * *

(3) * * *

(i) Perform the monitoring or inspection procedures in § 63.646 and either § 63.120 of subpart G or § 63.1063 of subpart WW, as applicable; and

(ii) For closed vent systems with control devices, conduct an initial design evaluation as specified in § 63.646 and either § 63.120(d) of subpart G or § 63.985(b) of subpart SS, as applicable.

* * * * *

(7) If an emission point in an emissions average is controlled using a pollution prevention measure or a device or technique for which no monitoring parameters or inspection procedures are specified in §§ 63.643 through 63.645, 63.646 or 63.660, 63.647, 63.650, and 63.651, as applicable, the owner or operator shall establish a site-specific monitoring parameter and shall submit the information specified in § 63.655(h)(4) in the Implementation Plan.

* * * * *

■ 26. Section 63.655 is amended by:

■ a. Revising paragraph (f) introductory text;

■ b. Revising paragraph (f)(1) introductory text;

■ c. Revising paragraph (f)(1)(i)(A) introductory text;

■ d. Revising paragraphs (f)(1)(i)(A)(*2*) and (*3*);

■ e. Revising paragraph (f)(1)(i)(B) introductory text;

■ f. Revising paragraph (f)(1)(i)(B)(*2*);

■ g. Revising paragraph (f)(1)(i)(D)(*2*);

■ h. Revising paragraph (f)(1)(iv) introductory text;

■ i. Revising paragraph (f)(1)(iv)(A);

■ j. Adding paragraph (f)(1)(vii);

■ k. Revising paragraph (f)(2) introductory text;

■ l. Revising paragraph (f)(3) introductory text;

■ m. Revising paragraph (f)(6);

■ n. Revising paragraph (g) introductory text;

■ o. Revising paragraphs (g)(1) through (5);
■ p. Revising paragraph (g)(6)(iii);
■ q. Revising paragraph (g)(7)(i);
■ r. Adding paragraphs (g)(10) through (13);
■ s. Removing and reserving paragraph (h)(1);
■ t. Revising paragraph (h)(2) introductory text;
■ u. Revising paragraph (h)(2)(i)(B);
■ v. Revising paragraph (h)(2)(ii);
■ w. Adding paragraphs (h)(8) and (9);
■ x. Adding paragraph (i) introductory text;
■ y. Revising paragraph (i)(1) introductory text;
■ z. Revising paragraph (i)(1)(ii);
■ aa. Adding paragraphs (i)(1)(v) and (vi);
■ bb. Redesignating paragraph (i)(4) and (5) as (i)(5) and (6) respectively;
■ cc. Adding paragraph (i)(4);
■ dd. Revising newly redesignated paragraph (i)(5) introductory text; and
■ ee. Adding paragraphs (i)(7) through (11).

The revisions and additions read as follows:

§ 63.655 Reporting and recordkeeping requirements.

* * * * *

(f) Each owner or operator of a source subject to this subpart shall submit a Notification of Compliance Status report within 150 days after the compliance dates specified in § 63.640(h) with the exception of Notification of Compliance Status reports submitted to comply with § 63.640(l)(3) and for storage vessels subject to the compliance schedule specified in § 63.640(h)(2). Notification of Compliance Status reports required by § 63.640(l)(3) and for storage vessels subject to the compliance dates specified in § 63.640(h)(2) shall be submitted according to paragraph (f)(6) of this section. This information may be submitted in an operating permit application, in an amendment to an operating permit application, in a separate submittal, or in any combination of the three. If the required information has been submitted before the date 150 days after the compliance date specified in § 63.640(h), a separate Notification of Compliance Status report is not required within 150 days after the compliance dates specified in § 63.640(h). If an owner or operator submits the information specified in paragraphs (f)(1) through (f)(5) of this section at different times, and/or in different submittals, later submittals may refer to earlier submittals instead of duplicating and resubmitting the previously submitted information. Each owner or operator of a gasoline loading rack classified under Standard Industrial Classification Code 2911 located within a contiguous area and under common control with a petroleum refinery subject to the standards of this subpart shall submit the Notification of Compliance Status report required by subpart R of this part within 150 days after the compliance dates specified in § 63.640(h) of this subpart.

(1) The Notification of Compliance Status report shall include the information specified in paragraphs (f)(1)(i) through (f)(1)(vii) of this section.

(i) * * *

(A) Identification of each storage vessel subject to this subpart, and for each Group 1 storage vessel subject to this subpart, the information specified in paragraphs (f)(1)(i)(A)(*1*) through (f)(1)(i)(A)(*3*) of this section. This information is to be revised each time a Notification of Compliance Status report is submitted for a storage vessel subject to the compliance schedule specified in § 63.640(h)(2) or to comply with § 63.640(l)(3).

* * * * *

(*2*) For storage vessels subject to the compliance schedule specified in § 63.640(h)(2) that are not complying with § 63.646, the anticipated compliance date.

(*3*) For storage vessels subject to the compliance schedule specified in § 63.640(h)(2) that are complying with § 63.646 and the Group 1 storage vessels described in § 63.640(l), the actual compliance date.

(B) If a closed vent system and a control device other than a flare is used to comply with § 63.646 or § 63.660, the owner or operator shall submit:

* * * * *

(*2*) The design evaluation documentation specified in § 63.120(d)(1)(i) of subpart G or § 63.985(b)(1)(i) of subpart SS (as applicable), if the owner or operator elects to prepare a design evaluation; or

* * * * *

(D) * * *

(*2*) All visible emission readings, heat content determinations, flow rate measurements, and exit velocity determinations made during the compliance determination required by § 63.120(e) of subpart G or § 63.987(b) of subpart SS or § 63.670(h), as applicable; and

* * * * *

(iv) For miscellaneous process vents controlled by flares, initial compliance test results including the information in paragraphs (f)(1)(iv)(A) and (B) of this section;

(A) All visible emission readings, heat content determinations, flow rate measurements, and exit velocity determinations made during the compliance determination required by § 63.645 of this subpart and § 63.116(a) of subpart G of this part or § 63.670(h) of this subpart, as applicable, and

* * * * *

(vii) For relief valves in organic HAP service, a description of the monitoring system to be implemented, including the relief valves and process parameters to be monitored, and a description of the alarms or other methods by which operators will be notified of a pressure release.

(2) If initial performance tests are required by §§ 63.643 through 63.653 of this subpart, the Notification of Compliance Status report shall include one complete test report for each test method used for a particular source. On and after [THE DATE 3 YEARS AFTER THE DATE OF PUBLICATION OF THE FINAL RULE AMENDMENTS IN THE **FEDERAL REGISTER**], performance tests shall be submitted according to paragraph (h)(9) of this section.

* * * * *

(3) For each monitored parameter for which a range is required to be established under § 63.120(d) of subpart G or § 63.985(b) of subpart SS for storage vessels or § 63.644 for miscellaneous process vents, the Notification of Compliance Status report shall include the information in paragraphs (f)(3)(i) through (f)(3)(iii) of this section.

* * * * *

(6) Notification of Compliance Status reports required by § 63.640(l)(3) and for storage vessels subject to the compliance dates specified in § 63.640(h)(2) shall be submitted no later than 60 days after the end of the 6-month period during which the change or addition was made that resulted in the Group 1 emission point or the existing Group 1 storage vessel was brought into compliance, and may be combined with the periodic report. Six-month periods shall be the same 6-month periods specified in paragraph (g) of this section. The Notification of Compliance Status report shall include the information specified in paragraphs (f)(1) through (f)(5) of this section. This information may be submitted in an operating permit application, in an amendment to an operating permit application, in a separate submittal, as part of the periodic report, or in any combination of these four. If the required information has been submitted before the date 60 days after the end of the 6-month period in which the addition of the Group 1 emission

point took place, a separate Notification of Compliance Status report is not required within 60 days after the end of the 6-month period. If an owner or operator submits the information specified in paragraphs (f)(1) through (f)(5) of this section at different times, and/or in different submittals, later submittals may refer to earlier submittals instead of duplicating and resubmitting the previously submitted information.

(g) The owner or operator of a source subject to this subpart shall submit Periodic Reports no later than 60 days after the end of each 6-month period when any of the information specified in paragraphs (g)(1) through (7) of this section or paragraphs (g)(9) through (12) of this section is collected. The first 6-month period shall begin on the date the Notification of Compliance Status report is required to be submitted. A Periodic Report is not required if none of the events identified in paragraph (g)(1) through (7) of this section or paragraphs (g)(9) through (12) of this section occurred during the 6-month period unless emissions averaging is utilized. Quarterly reports must be submitted for emission points included in emission averages, as provided in paragraph (g)(8) of this section. An owner or operator may submit reports required by other regulations in place of or as part of the Periodic Report required by this paragraph if the reports contain the information required by paragraphs (g)(1) through (12) of this section.

(1) For storage vessels, Periodic Reports shall include the information specified for Periodic Reports in paragraph (g)(2) through (g)(5) of this section. Information related to gaskets, slotted membranes, and sleeve seals is not required for storage vessels that are part of an existing source complying with § 63.646.

(2) *Internal floating roofs.* (i) An owner or operator who elects to comply with § 63.646 by using a fixed roof and an internal floating roof or by using an external floating roof converted to an internal floating roof shall submit the results of each inspection conducted in accordance with § 63.120(a) of subpart G in which a failure is detected in the control equipment.

(A) For vessels for which annual inspections are required under § 63.120(a)(2)(i) or (a)(3)(ii) of subpart G, the specifications and requirements listed in paragraphs (g)(2)(i)(A)(*1*) through (*3*) of this section apply.

(*1*) A failure is defined as any time in which the internal floating roof is not resting on the surface of the liquid inside the storage vessel and is not resting on the leg supports; or there is liquid on the floating roof; or the seal is detached from the internal floating roof; or there are holes, tears, or other openings in the seal or seal fabric; or there are visible gaps between the seal and the wall of the storage vessel.

(*2*) Except as provided in paragraph (g)(2)(i)(C) of this section, each Periodic Report shall include the date of the inspection, identification of each storage vessel in which a failure was detected, and a description of the failure. The Periodic Report shall also describe the nature of and date the repair was made or the date the storage vessel was emptied.

(*3*) If an extension is utilized in accordance with § 63.120(a)(4) of subpart G, the owner or operator shall, in the next Periodic Report, identify the vessel; include the documentation specified in § 63.120(a)(4) of subpart G; and describe the date the storage vessel was emptied and the nature of and date the repair was made.

(B) For vessels for which inspections are required under § 63.120(a)(2)(ii), (a)(3)(i), or (a)(3)(iii) of subpart G (i.e., internal inspections), the specifications and requirements listed in paragraphs (g)(2)(i)(B)(*1*) and (*2*) of this section apply.

(*1*) A failure is defined as any time in which the internal floating roof has defects; or the primary seal has holes, tears, or other openings in the seal or the seal fabric; or the secondary seal (if one has been installed) has holes, tears, or other openings in the seal or the seal fabric; or, for a storage vessel that is part of a new source, the gaskets no longer close off the liquid surface from the atmosphere; or, for a storage vessel that is part of a new source, the slotted membrane has more than a 10 percent open area.

(*2*) Each Periodic Report shall include the date of the inspection, identification of each storage vessel in which a failure was detected, and a description of the failure. The Periodic Report shall also describe the nature of and date the repair was made.

(ii) An owner or operator who elects to comply with § 63.660 by using a fixed roof and an internal floating roof shall submit the results of each inspection conducted in accordance with § 63.1063(c)(1), (d)(1), and (d)(2) of subpart WW in which a failure is detected in the control equipment. For vessels for which inspections are required under § 63.1063(c) and (d), the specifications and requirements listed in paragraphs (g)(2)(ii)(A) through (g)(2)(ii)(C) of this section apply.

(A) A failure is defined in § 63.1063(d)(1) of subpart WW.

(B) Each Periodic Report shall include a copy of the inspection record required by § 63.1065(b) of subpart WW when a failure occurs.

(C) An owner or operator who elects to use an extension in accordance with § 63.1063(e)(2) of subpart WW shall, in the next Periodic Report, submit the documentation required by § 63.1063(e)(2).

(3) *External floating roofs.* (i) An owner or operator who elects to comply with § 63.646 by using an external floating roof shall meet the periodic reporting requirements specified in paragraphs (g)(3)(i)(A) and (B) of this section.

(A) The owner or operator shall submit, as part of the Periodic Report, documentation of the results of each seal gap measurement made in accordance with § 63.120(b) of subpart G in which the seal and seal gap requirements of § 63.120(b)(3), (b)(4), (b)(5), or (b)(6) of subpart G are not met. This documentation shall include the information specified in paragraphs (g)(3)(i)(A)(*1*) through (*4*) of this section.

(*1*) The date of the seal gap measurement.

(*2*) The raw data obtained in the seal gap measurement and the calculations described in § 63.120(b)(3) and (b)(4) of subpart G.

(*3*) A description of any seal condition specified in § 63.120(b)(5) or (b)(6) of subpart G that is not met.

(*4*) A description of the nature of and date the repair was made, or the date the storage vessel was emptied.

(B) If an extension is utilized in accordance with § 63.120(b)(7)(ii) or (b)(8) of subpart G, the owner or operator shall, in the next Periodic Report, identify the vessel; include the documentation specified in § 63.120(b)(7)(ii) or (b)(8) of subpart G, as applicable; and describe the date the vessel was emptied and the nature of and date the repair was made.

(C) The owner or operator shall submit, as part of the Periodic Report, documentation of any failures that are identified during visual inspections required by § 63.120(b)(10) of subpart G. This documentation shall meet the specifications and requirements in paragraphs (g)(3)(i)(C)(*1*) and (*2*) of this section.

(*1*) A failure is defined as any time in which the external floating roof has defects; or the primary seal has holes or other openings in the seal or the seal fabric; or the secondary seal has holes, tears, or other openings in the seal or the seal fabric; or, for a storage vessel that is part of a new source, the gaskets no longer close off the liquid surface from the atmosphere; or, for a storage

vessel that is part of a new source, the slotted membrane has more than 10 percent open area.

(*2*) Each Periodic Report shall include the date of the inspection, identification of each storage vessel in which a failure was detected, and a description of the failure. The Periodic Report shall also describe the nature of and date the repair was made.

(ii) An owner or operator who elects to comply with § 63.660 by using an external floating roof shall meet the periodic reporting requirements specified in paragraphs (g)(3)(ii)(A) and (B) of this section.

(A) For vessels for which inspections are required under § 63.1063(c)(2), (d)(1), and (d)(3) of subpart WW, the owner or operator shall submit, as part of the Periodic Report, a copy of the inspection record required by § 63.1065(b) of subpart WW when a failure occurs. A failure is defined in § 63.1063(d)(1).

(B) An owner or operator who elects to use an extension in accordance with § 63.1063(e)(2) or § 63.1063(c)(2)(iv)(B) of subpart WW shall, in the next Periodic Report, submit the documentation required by those paragraphs.

(4) An owner or operator who elects to comply with § 63.646 or § 63.660 by using an external floating roof converted to an internal floating roof shall comply with the periodic reporting requirements of paragraph (g)(2)(i) of this section.

(5) An owner or operator who elects to comply with § 63.646 or § 63.660 by installing a closed vent system and control device shall submit, as part of the next Periodic Report, the information specified in paragraphs (g)(5)(i) through (g)(5)(iii) of this section, as applicable.

(i) The Periodic Report shall include the information specified in paragraphs (g)(5)(i)(A) and (B) of this section for those planned routine maintenance operations that would require the control device not to meet the requirements of either § 63.119(e)(1) or (e)(2) of subpart G, § 63.985(a) and (b) of subpart SS, or § 63.670, as applicable.

(A) A description of the planned routine maintenance that is anticipated to be performed for the control device during the next 6 months. This description shall include the type of maintenance necessary, planned frequency of maintenance, and lengths of maintenance periods.

(B) A description of the planned routine maintenance that was performed for the control device during the previous 6 months. This description shall include the type of maintenance performed and the total number of hours during those 6 months that the control device did not meet the requirements of either § 63.119(e)(1) or (2) of subpart G, § 63.985(a) and (b) of subpart SS, or § 63.670, as applicable, due to planned routine maintenance.

(ii) If a control device other than a flare is used, the Periodic Report shall describe each occurrence when the monitored parameters were outside of the parameter ranges documented in the Notification of Compliance Status report. The description shall include: Identification of the control device for which the measured parameters were outside of the established ranges, and causes for the measured parameters to be outside of the established ranges.

(iii) If a flare is used prior to [THE DATE 3 YEARS AFTER THE DATE OF PUBLICATION OF THE FINAL RULE AMENDMENTS IN THE **FEDERAL REGISTER**] and prior to electing to comply with the requirements in § 63.670, the Periodic Report shall describe each occurrence when the flare does not meet the general control device requirements specified in § 63.11(b) of subpart A of this part and shall include: Identification of the flare that does not meet the general requirements specified in § 63.11(b) of subpart A of this part, and reasons the flare did not meet the general requirements specified in § 63.11(b) of subpart A of this part.

(iv) If a flare is used on and after compliance with the requirements in § 63.670 is elected, which can be no later than [THE DATE 3 YEARS AFTER THE DATE OF PUBLICATION OF THE FINAL RULE AMENDMENTS IN THE **FEDERAL REGISTER**], the Periodic Report shall include the items specified in paragraph (g)(11) of this section.

(v) An owner or operator who elects to comply with § 63.660 by installing an alternate control device as described in § 63.1064 of subpart WW shall submit, as part of the next Periodic Report, a written application as described in § 63.1066(b)(3) of subpart WW.

(6) * * *

(iii) For closed vent systems, include the records of periods when vent stream flow was detected in the bypass line or diverted from the control device, a flow indicator was not operating or a bypass of the system was indicated, as specified in paragraph (i)(4) of this section.

(7) * * *

(i) Results of the performance test shall include the identification of the source tested, the date of the test, the percentage of emissions reduction or outlet pollutant concentration reduction (whichever is needed to determine compliance) for each run and for the average of all runs, and the values of the monitored operating parameters.

* * * * *

(10) For relief valves, Periodic Reports must include the information specified in paragraphs (g)(10)(i) through (iii) of this section.

(i) For relief valves in organic HAP gas or vapor service, pursuant to § 63.648(j), report any instrument reading of 500 ppm or greater, more than 5 days after the relief valve returns to service after a pressure release.

(ii) For relief valves in organic HAP gas or vapor service subject to § 63.648(j)(2), report confirmation that all monitoring to show compliance was conducted within the reporting period.

(iii) For relief valves in organic HAP service, report each pressure release to the atmosphere, including duration of the pressure release and estimate of quantity of substances released.

(11) For flares subject to § 63.670, Periodic Reports must include the information specified in paragraphs (g)(11)(i) through (iii) of this section.

(i) Records as specified in paragraph (i)(9)(i) of this section for each period when regulated material is routed to a flare and a pilot flame is not present.

(ii) Visible emission records as specified in paragraph (i)(9)(ii) of this section for each period of 2 consecutive hours during which visible emissions exceeded a total of 5 minutes.

(iii) The 15-minute block periods for which the applicable operating limits specified in § 63.670(d) through (f) are not met. Indicate the date and time for the period, the 15-minute block average operating parameters determined following the methods in § 63.670(k) through (o) as applicable, and an indication of whether the three criteria in § 63.670(e)(vi) were all met for that 15-minute block period.

(iv) Records as specified in paragraph (i)(9)(x) of this section for each period when a halogenated vent stream as defined in § 63.641 is discharged to the flare.

(12) If a source fails to meet an applicable standard, report such events in the Periodic Report. Report the number of failures to meet an applicable standard. For each instance, report the date, time and duration of each failure. For each failure the report must include a list of the affected sources or equipment, an estimate of the quantity of each regulated pollutant emitted over any emission limit, and a description of the method used to estimate the emissions.

(13) Any changes in the information provided in a previous Notification of Compliance Status report.

(h) * * *

(2) For storage vessels, notifications of inspections as specified in paragraphs (h)(2)(i) and (h)(2)(ii) of this section.

(i) * * *

(B) Except as provided in paragraph (h)(2)(i)(C) of this section, if the internal inspection required by § 63.120(a)(2), § 63.120(a)(3), or § 63.120(b)(10) of subpart G or § 63.1063(d)(1) of subpart WW is not planned and the owner or operator could not have known about the inspection 30 calendar days in advance of refilling the vessel with organic HAP, the owner or operator shall notify the Administrator at least 7 calendar days prior to refilling of the storage vessel. Notification may be made by telephone and immediately followed by written documentation demonstrating why the inspection was unplanned. This notification, including the written documentation, may also be made in writing and sent so that it is received by the Administrator at least 7 calendar days prior to the refilling.

* * * * *

(ii) In order to afford the Administrator the opportunity to have an observer present, the owner or operator of a storage vessel equipped with an external floating roof shall notify the Administrator of any seal gap measurements. The notification shall be made in writing at least 30 calendar days in advance of any gap measurements required by § 63.120(b)(1) or (b)(2) of subpart G or § 63.1062(d)(3) of subpart WW. The State or local permitting authority can waive this notification requirement for all or some storage vessels subject to the rule or can allow less than 30 calendar days' notice.

* * * * *

(8) For fenceline monitoring systems subject to § 63.658, within 45 calendar days after the end of each semiannual reporting period, each owner or operator shall submit the following information to the EPA's Compliance and Emissions Data Reporting Interface (CEDRI) that is accessed through the EPA's Central Data Exchange (CDX) (*www.epa.gov/cdx*). The owner or operator need not transmit this data prior to obtaining 12 months of data.

(i) Individual sample results for each monitor for each sampling episode during the semiannual reporting period. For the first reporting period and for any period in which a passive monitor is added or moved, the owner or operator shall report the coordinates of all of the passive monitor locations. The owner or operator shall determine the coordinates using an instrument with an accuracy of at least 3 meters. Coordinates shall be in decimal degrees with at least five decimal places.

(ii) The biweekly 12-month rolling average concentration difference (Δc) values for benzene for the semiannual reporting period.

(iii) Notation for each biweekly value that indicates whether background correction was used, all measurements in the sampling period were below detection, or whether an outlier was removed from the sampling period data set.

(9) On and after [THE DATE OF PUBLICATION OF THE FINAL RULE AMENDMENTS IN THE **FEDERAL REGISTER**], if required to submit the results of a performance test or CEMS performance evaluation, the owner or operator shall submit the results using EPA's Electronic Reporting Tool (ERT) according to the procedures in paragraphs (h)(9)(i) and (ii) of this section.

(i) Within 60 days after the date of completing each performance test as required by this subpart, the owner or operator shall submit the results of the performance tests according to the method specified by either paragraph (h)(9)(i)(A) or (h)(9)(i)(B) of this section.

(A) For data collected using test methods supported by the EPA's ERT as listed on the EPA's ERT Web site (*http://www.epa.gov/ttn/chief/ert/index.html*), the owner or operator must submit the results of the performance test to the CEDRI accessed through the EPA's CDX (*http://cdx.epa.gov/epa_home.asp*), unless the Administrator approves another approach. Performance test data must be submitted in a file format generated through the use of the EPA's ERT. If an owner or operator claims that some of the performance test information being submitted is confidential business information (CBI), the owner or operator must submit a complete file generated through the use of the EPA's ERT, including information claimed to be CBI, on a compact disc or other commonly used electronic storage media (including, but not limited to, flash drives) by registered letter to the EPA. The electronic media must be clearly marked as CBI and mailed to U.S. EPA/OAQPS/CORE CBI Office, Attention: WebFIRE Administrator, MD C404–02, 4930 Old Page Rd., Durham, NC 27703. The same ERT file with the CBI omitted must be submitted to the EPA via CDX as described earlier in this paragraph.

(B) For data collected using test methods that are not supported by the EPA's ERT as listed on the EPA's ERT Web site, the owner or operator must submit the results of the performance test to the Administrator at the appropriate address listed in § 63.13.

(ii) Within 60 days after the date of completing each CEMS performance evaluation as required by this subpart, the owner or operator must submit the results of the performance evaluation according to the method specified by either paragraph (h)(9)(ii)(A) or (h)(9)(ii)(B) of this section.

(A) For data collection of relative accuracy test audit (RATA) pollutants that are supported by the EPA's ERT as listed on the ERT Web site, the owner or operator must submit the results of the performance evaluation to the CEDRI that is accessed through the EPA's CDX, unless the Administrator approves another approach. Performance evaluation data must be submitted in a file format generated through the use of the EPA's ERT. If an owner or operator claims that some of the performance evaluation information being submitted is CBI, the owner or operator must submit a complete file generated through the use of the EPA's ERT, including information claimed to be CBI, on a compact disc or other commonly used electronic storage media (including, but not limited to, flash drives) by registered letter to the EPA. The electronic media must be clearly marked as CBI and mailed to U.S. EPA/OAQPS/CORE CBI Office, Attention: WebFIRE Administrator, MD C404–02, 4930 Old Page Rd., Durham, NC 27703. The same ERT file with the CBI omitted must be submitted to the EPA via CDX as described earlier in this paragraph.

(B) For any performance evaluation data with RATA pollutants that are not supported by the EPA's ERT as listed on the EPA's ERT Web site, the owner or operator must submit the results of the performance evaluation to the Administrator at the appropriate address listed in § 63.13.

(i) *Recordkeeping.* Each owner or operator of a source subject to this subpart shall keep copies of all applicable reports and records required by this subpart for at least 5 years except as otherwise specified in paragraphs (i)(1) through (11) of this section. All applicable records shall be maintained in such a manner that they can be readily accessed within 24 hours. Records may be maintained in hard copy or computer-readable form including, but not limited to, on paper, microfilm, computer, flash drive, floppy disk, magnetic tape, or microfiche.

(1) Each owner or operator subject to the storage vessel provisions in § 63.646 shall keep the records specified in § 63.123 of subpart G of this part except as specified in paragraphs (i)(1)(i)

through (iv) of this section. Each owner or operator subject to the storage vessel provisions in § 63.660 shall keep records as specified in paragraphs (i)(1)(v) and (vi) of this section.

* * * * *

(ii) All references to § 63.122 in § 63.123 of subpart G of this part shall be replaced with § 63.655(e).

* * * * *

(v) Each owner or operator of a Group 1 storage vessel subject to the provisions in § 63.660 shall keep records as specified in § 63.1065.

(vi) Each owner or operator of a Group 2 storage vessel shall keep the records specified in § 63.1065(a) of subpart WW. If a storage vessel is determined to be Group 2 because the weight percent total organic HAP of the stored liquid is less than or equal to 4 percent for existing sources or 2 percent for new sources, a record of any data, assumptions, and procedures used to make this determination shall be retained.

* * * * *

(4) For each closed vent system that contains bypass lines that could divert a vent stream away from the control device and to the atmosphere, or cause air intrusion into the control device, the owner or operator shall keep a record of the information specified in either paragraph (i)(4)(i) or (ii) of this section, as applicable.

(i) The owner or operator shall maintain records of any alarms triggered because flow was detected in the bypass line, including the date and time the alarm was triggered and the duration of the flow in the bypass line. The owner or operator shall also maintain records of all periods when the vent stream is diverted from the control device or air intrudes into the control device. The owner or operator shall include an estimate of the volume of gas, the concentration of organic HAP in the gas and the resulting emissions of organic HAP that bypassed the control device.

(ii) Where a seal mechanism is used to comply with § 63.644(c)(2), hourly records of flow are not required. In such cases, the owner or operator shall record the date that the monthly visual inspection of the seals or closure mechanisms is completed. The owner or operator shall also record the occurrence of all periods when the seal or closure mechanism is broken, the bypass line valve position has changed or the key for a lock-and-key type lock has been checked out. The owner or operator shall include an estimate of the volume of gas, the concentration of organic HAP in the gas and the resulting emissions of organic HAP that bypassed the control device.

(5) The owner or operator of a heat exchange system subject to this subpart shall comply with the recordkeeping requirements in paragraphs (i)(5)(i) through (v) of this section and retain these records for 5 years.

* * * * *

(7) Each owner or operator subject to the delayed coking unit decoking operations provisions in § 63.657 must maintain records of the average pressure for the 5-minute period prior to venting to the atmosphere, draining, or deheading the coke drum for each cooling cycle for each coke drum.

(8) For fenceline monitoring systems subject to § 63.658, each owner or operator shall keep the records specified in paragraphs (i)(8)(i) through (ix) of this section on an ongoing basis.

(i) Coordinates of all passive monitors, including replicate samplers and field blanks, and the meteorological station. The owner or operator shall determine the coordinates using an instrument with an accuracy of at least 3 meters. The coordinates shall be in decimal degrees with at least five decimal places.

(ii) The start and stop times and dates for each sample, as well as the tube identifying information.

(iii) Daily unit vector wind direction, calculated daily sigma theta, daily average temperature and daily average barometric pressure measurements.

(iv) For each outlier determined in accordance with Section 9.2 of Method 325A of Appendix A of this part, the sampler location of and the concentration of the outlier and the evidence used to conclude that the result is an outlier.

(v) For samples that will be adjusted for a background, the location of and the concentration measured simultaneously by the background sampler, and the perimeter samplers to which it applies.

(vi) Individual sample results, the calculated Δc for benzene for each sampling episode and the two samples used to determine it, whether background correction was used, and the 12-month rolling average Δc calculated after each sampling episode.

(vii) Method detection limit for each sample, including co-located samples and blanks.

(viii) Documentation of corrective action taken each time the action level was exceeded.

(ix) Other records as required by Methods 325A and 325B of Appendix A of this part.

(9) For each flare subject to § 63.670, each owner or operator shall keep the records specified in paragraphs (i)(9)(i) through (vii) of this section up-to-date and readily accessible, as applicable.

(i) Retain records of the output of the monitoring device used to detect the presence of a pilot flame as required in § 63.670(b) for a minimum of 2 years. Retain records of periods during which the pilot flame is not present when regulated material is routed to a flare for a minimum of 5 years.

(ii) Daily visible emissions observations, as required in § 63.670(c), as well as any observations required in § 63.670(h). The record must identify whether the visible emissions observation was performed, the results of each observation, total duration of observed visible emissions, and whether it was a 5-minute or 2-hour observation. If the owner or operator performs visible emissions observations more than one time during a day, the record must also identify the date and time of day each visible emissions observation was performed.

(iii) The 15-minute block average cumulative flows for flare vent gas and, if applicable, total steam, perimeter assist air, and premix assist air specified to be monitored under § 63.670(i), along with the date and time interval for the 15-minute block. If multiple monitoring locations are used to determine cumulative vent gas flow, total steam, perimeter assist air, and premix assist air, retain records of the 15-minute block average flows for each monitoring location for a minimum of 2 years, and retain the 15-minute block average cumulative flows that are used in subsequent calculations for a minimum of 5 years. If pressure and temperature monitoring is used, retain records of the 15-minute block average temperature, pressure and molecular weight of the flare vent gas or assist gas stream for each measurement location used to determine the 15-minute block average cumulative flows for a minimum of 2 years, and retain the 15-minute block average cumulative flows that are used in subsequent calculations for a minimum of 5 years.

(iv) The flare vent gas compositions specified to be monitored under § 63.670(j). Retain records of individual component concentrations from each compositional analyses for a minimum of 2 years. If NHV_{vg} or total hydrocarbon analyzer is used, retain records of the 15-minute block average values for a minimum of 5 years.

(v) Each 15-minute block average operating parameter calculated following the methods specified in § 63.670(k) through (m), as applicable.

(vi) The 15-minute block average olefins, hydrogen, and olefins plus

hydrogen concentration in the combustion zone used to determine if the criteria in § 63.670(e)(4) are met. If process knowledge and engineering calculations are used, retain records of the information used in the assessment and records of all compositional analyses required in § 63.670(o)(ii). Identify all 15-minute block averages for which all three criteria in § 63.670(e)(4) are met or are assumed to be met.

(vii) All periods during which operating values are outside of the applicable operating limits specified in § 63.670(d) through (f) when regulated material is being routed to the flare.

(viii) All periods during which the owner or operator does not perform flare monitoring according to the procedures in § 63.670(g) through (j).

(ix) Records of periods when there is flow of vent gas to the flare, but when there is no flow of regulated material to the flare, including the start and stop time and dates of periods of no regulated material flow.

(x) All periods during which a halogenated vent stream, as defined in § 63.641, is discharged to the flare. Records shall include the start time and date of the event, the end time and date of the event, and an estimate of the cumulative flow of the halogenated vent stream over the duration of the event.

(10) If the owner or operator elects to comply with § 63.661, the owner or operator shall keep the records described in paragraphs (i)(10)(i) through (v) of this section.

(i) The equipment and process units for which the owner or operator chooses to use the optical gas imaging instrument.

(ii) All records required by part 60, Appendix K of this chapter, as applicable.

(iii) A video record to document the leak survey results. The video record must include a time and date stamp for each monitoring event.

(iv) Identification of the equipment screened and the time and date of the screening.

(v) Documentation of repairs attempted and repairs delayed. If repair of a leak is confirmed using the optical gas imaging instrument, then instead of the maximum instrument reading measured by Method 21 of part 60, Appendix A–7 of this chapter, the owner or operator shall keep a video record following repair to confirm the equipment is repaired.

(11) Other records must be kept as specified in paragraphs (i)(11)(i) through (iii) of this section.

(i) In the event that an affected unit fails to meet an applicable standard, record the number of failures. For each failure, record the date, time and duration of each failure.

(ii) For each failure to meet an applicable standard, record and retain a list of the affected sources or equipment, an estimate of the volume of each regulated pollutant emitted over any emission limit and a description of the method used to estimate the emissions.

(iii) Record actions taken to minimize emissions in accordance with § 63.642(n), and any corrective actions taken to return the affected unit to its normal or usual manner of operation.

■ 27. Section 63.656 is amended by:

■ a. Revising paragraph (c) introductory text;

■ b. Revising paragraph (c)(1); and

■ c. Adding paragraph (c)(5).

The revisions and additions read as follows:

§ 63.656 Implementation and enforcement.

* * * * *

(c) The authorities that cannot be delegated to state, local, or Tribal agencies are as specified in paragraphs (c)(1) through (5) of this section.

(1) Approval of alternatives to the requirements in §§ 63.640, 63.642(g) through (l), 63.643, 63.646 through 63.652, 63.654, 63.657 through 63.661, and 63.670. Where these standards reference another subpart, the cited provisions will be delegated according to the delegation provisions of the referenced subpart. Where these standards reference another subpart and modify the requirements, the requirements shall be modified as described in this subpart. Delegation of the modified requirements will also occur according to the delegation provisions of the referenced subpart.

* * * * *

(5) Approval of the corrective action plan under § 63.658(h).

■ 28. Section 63.657 is added to read as follows:

§ 63.657 Delayed coking unit decoking operation standards.

(a) Each owner or operator of a delayed coking unit shall depressure each coke drum to a closed blowdown system until the coke drum vessel pressure is 2 pounds per square inch gauge (psig) or less prior to venting to the atmosphere, draining or deheading the coke drum at the end of the cooling cycle.

(b) Each owner or operator of a delayed coking unit shall install, operate, calibrate, and maintain a continuous parameter monitoring system to determine the coke drum vessel pressure. The pressure monitoring system must be capable of measuring a pressure of 2 psig within ±0.5 psig.

(c) The owner or operator of a delayed coking unit shall determine the coke drum vessel pressure on a 5-minute rolling average basis while the coke drum is vented to the closed blowdown system to demonstrate compliance the requirement in paragraph (a) of this section. Pressure readings after initiating steps to isolate the coke drum from the closed blowdown system just prior to atmospheric venting, draining, or deheading the coke drum shall not be used in determining the average coke drum vessel pressure for the purpose of compliance with the requirement in paragraph (a) of this section.

■ 29. Section 63.658 is added to read as follows:

§ 63.658 Fenceline monitoring provisions.

(a) The owner or operator shall conduct sampling along the facility property boundary and analyze the samples in accordance with Methods 325A and 325B of Appendix A of this part.

(b) The target analyte is benzene.

(c) The owner or operator shall determine passive monitor locations in accordance with Section 8.2 of Method 325A of Appendix A of this part. General guidance for siting passive monitors can be found in EPA–454/R–98–004, Quality Assurance Handbook for Air Pollution Measurement Systems, Volume II: Part 1: Ambient Air Quality Monitoring Program Quality System Development, August 1998 (incorporated by reference—see § 63.14). Alternatively, the owner or operator may elect to place monitors at 2 kilometers intervals as measured along the property boundary, provided additional monitors are located, if necessary, as required in Section 8.2.2.5 in Method 325A of Appendix A of this part.

(1) As it pertains to this subpart, known emission source, as used in Section 8.2.2.5 in Method 325A of Appendix A of this part for siting passive monitors means a wastewater treatment unit or a Group 1 storage vessel.

(2) The owner or operator may collect one or more background samples if the owner or operator believes that an offsite upwind source or an onsite source excluded under § 63.640(g) may influence the sampler measurements. If the owner or operator elects to collect one or more background samples, the owner of operator must develop and submit a site-specific monitoring plan for approval according to the requirements in paragraph (i) of this section. Upon approval of the site-specific monitoring plant, the background sampler(s) should be

operated co-currently with the routine samplers.

(3) The owner or operator shall collect at least one co-located duplicate sample for every 10 field samples per sampling episode and at least two field blanks per sampling episode, as described in Section 9.3 in Method 325A of Appendix A of this part. The co-located duplicates may be collected at any one of the perimeter sampling locations.

(4) The owner or operator shall follow the procedure in Section 9.6 of Method 325B of Appendix A of this part to determine the detection limit of benzene for each sampler used to collect samples, background samples (if the owner or operator elects to do so), co-located samples and blanks.

(d) The owner or operator shall use a dedicated meteorological station in accordance with Section 8.3 of Method 325A of Appendix A of this part.

(1) The owner or operator shall collect and record hourly average meteorological data, including wind speed, wind direction and temperature.

(2) The owner or operator shall follow the calibration and standardization procedures for meteorological measurements in EPA–454/B–08–002, Quality Assurance Handbook for Air Pollution Measurement Systems, Volume IV: Meteorological Measurements, Version 2.0 (Final), March 2008 (incorporated by reference—see § 63.14).

(e) The length of the sampling episode must be fourteen days, unless a shorter sampling episode is determined to be necessary under paragraph (g) or (i) of this section. A sampling episode is defined as the period during which the owner or operator collects the sample and does not include the time required to analyze the sample.

(f) Within 30 days of completion of each sampling episode, the owner or operator shall determine whether the results are above or below the action level as follows:

(1) For each sampling episode, the owner or operator shall determine the highest and lowest sample results for benzene from the sample pool and calculate the difference in concentration (Δc).

(i) The owner or operator shall adhere to the following procedures when one or more samples for the sampling episode are below the method detection limit for benzene:

(A) If the lowest detected value of benzene is below detection, the owner or operator shall use zero as the lowest sample result when calculating Δc.

(B) If all sample results are below the method detection limit, the owner or operator shall use the method detection limit as the highest sample result.

(ii) If the owner or operator identifies an offsite upwind source or an onsite source excluded under § 63.640(g) that contributes to the benzene concentration at any passive monitor and collects background samples according to an approved site-specific monitoring plan, the owner or operator shall determine Δc using the calculation protocols outlined in the approved site-specific monitoring plan and in paragraph (i) of this section.

(2) The owner or operator shall average the Δc values collected over the twelve months prior to and including the most recent sampling episode. The owner or operator shall update this value after receiving the results of each sampling episode.

(3) The action level for benzene is 9 micrograms per cubic meter ($\mu g/m^3$). If the 12-month rolling average Δc value for benzene is less than 9 $\mu g/m^3$, the concentration is below the action level. If the 12-month rolling average Δc value for benzene is equal to or greater than 9 $\mu g/m^3$, the concentration is above the action level, and the owner or operator shall conduct a root cause analysis and corrective action in accordance with paragraph (g) of this section.

(g) Within 5 days of determining that the action level has been exceeded for any 12-month rolling average and no longer than 35 days after completion of the sampling episode, the owner or operator shall initiate a root cause analysis to determine the cause of such exceedance and to determine appropriate corrective action, as described in paragraphs (g)(1) through (4) of this section. The root cause analysis and corrective action analysis shall be completed no later than 45 days after determining there is an exceedance. Root cause analysis and corrective action may include, but is not limited to:

(1) Leak inspection using Method 21 of part 60, Appendix A–7 of this chapter and repairing any leaks found.

(2) Leak inspection using optical gas imaging as specified in § 63.661 and repairing any leaks found.

(3) Visual inspection to determine the cause of the high benzene emissions and implementing repairs to reduce the level of emissions.

(4) Employing progressively more frequent sampling, analysis and meteorology (e.g., using shorter sampling episodes for Methods 325A and 325B of Appendix A of this part, or using active sampling techniques), or employing additional monitors to determine contributing offsite sources.

(h) If, upon completion of the corrective actions described in paragraph (g) of this section, the action level is exceeded for the next sampling episode following the completion of the corrective action, the owner or operator shall develop a corrective action plan that describes the corrective action(s) completed to date, additional measures that the owner or operator proposes to employ to reduce fenceline concentrations below the action level, and a schedule for completion of these measures. The owner or operator shall submit the corrective action plan to the Administrator within 60 days after determining the action level was exceeded during the sampling episode following the completion of the initial corrective action. The Administrator shall approve or disapprove the plan in 90 days. The plan shall be considered approved if the Administrator either approves the plan in writing, or fails to disapprove the plan in writing. The 90-day period shall begin when the Administrator receives the plan.

(i) An owner or operator may request approval from the Administrator for a site-specific monitoring plan to account for offsite upwind sources or onsite sources excluded under § 63.640(g) according to the requirements in paragraphs (i)(1) through (4) of this section.

(1) The owner or operator shall prepare and submit a site-specific monitoring plan and receive approval of the site-specific monitoring plan prior to using the near-field source alternative calculation for determining Δc provided in paragraph (i)(2) of this section. The site-specific monitoring plan shall include, at a minimum, the elements specified in paragraphs (i)(1)(i) through (v) of this section.

(i) Identification of the near-field source or sources. For onsite sources, documentation that the onsite source is excluded under § 63.640(g) and identification of the specific provision in § 63.640(g) that applies to the source.

(ii) Location of the additional monitoring stations that shall be used to determine the uniform background concentration and the near-field source concentration contribution.

(iii) Identification of the fenceline monitoring locations impacted by the near-field source. If more than one near-field source is present, identify for each monitoring location, the near field source or sources that are expected to contribute to fenceline concentration at that monitoring location.

(iv) A description of (including sample calculations illustrating) the planned data reduction and calculations to determine the near-field source

concentration contribution for each monitoring location.

(v) If more frequent monitoring is proposed or if a monitoring station other than a passive diffusive tub monitoring station is proposed, provide a detailed description of the measurement methods, measurement frequency, and recording frequency proposed for determining the uniform background or near-field source concentration contribution.

(2) When an approved site-specific monitoring plan is used, the owner or operator shall determine Δc for comparison with the 9 μg/m³ action level using the requirements specified in paragraphs (2)(i) through (iii) of this section.

(i) For each monitoring location, calculate Δc_i using the following equation.

$$\Delta c_i = MCF_i - NFS_i - UB$$

Where:

Δc_i = The fenceline concentration, corrected for background, at measurement location i, micrograms per cubic meter (μg/m³).

MFC_i = The measured fenceline concentration at measurement location i, μg/m³.

NFS_i = The near-field source contributing concentration at measurement location i determined using the additional measurements and calculation procedures included in the site-specific monitoring plan, μg/m³. For monitoring locations that are not included in the site-specific monitoring plan as impacted by a near-field source, use NFS_i = 0 μg/m³.

UB = The uniform background concentration determined using the additional measurements specified included in the site-specific monitoring plan, μg/m³. If no additional measurement location is specified in the site-specific monitoring plan for determining the uniform background concentration, use UB = 0 μg/m³.

(ii) When one or more samples for the sampling episode are below the method detection limit for benzene, adhere to the following procedures:

(A) If the benzene concentration at the monitoring location used for the uniform background concentration is below detection, the owner or operator shall use zero for UB for that monitoring period.

(B) If the benzene concentration at the monitoring location(s) used to determine the near-field source contributing concentration is below detection, the owner or operator shall use zero for the monitoring location concentration when calculating NFS_i for that monitoring period.

(C) If a fenceline monitoring location sample result is below the method detection limit, the owner or operator shall use the method detection limit as the sample result.

(iii) Determine Δc for the monitoring period as the maximum value of Δc_i from all of the fenceline monitoring locations for that monitoring period.

(3) The site-specific monitoring plan shall be submitted and approved as described in paragraphs (i)(3)(i) through (iv) of this section.

(i) The site-specific monitoring plan must be submitted to the Administrator for approval.

(ii) The site-specific monitoring plan shall also be submitted to the following address: U.S. Environmental Protection Agency, Office of Air Quality Planning and Standards, Sector Policies and Programs Division, U.S. EPA Mailroom (E143–01), Attention: Refinery Sector Lead, 109 T.W. Alexander Drive, Research Triangle Park, NC 27711. Electronic copies in lieu of hard copies may also be submitted to *refineryrtr@epa.gov.*

(iii) The Administrator shall approve or disapprove the plan in 90 days. The plan shall be considered approved if the Administrator either approves the plan in writing, or fails to disapprove the plan in writing. The 90-day period shall begin when the Administrator receives the plan.

(iv) If the Administrator finds any deficiencies in the site-specific monitoring plan and disapproves the plan in writing, the owner or operator may revise and resubmit the site-specific monitoring plan following the requirements in paragraphs (i)(3)(i) and (ii) of this section. The 90-day period starts over with the resubmission of the revised monitoring plan.

(4) The approval by the Administrator of a site-specific monitoring plan will be based on the completeness, accuracy and reasonableness of the request process for a site-specific monitoring plan. Factors that the EPA will consider in reviewing the request for a site-specific monitoring plan include, but are not limited to, those described in paragraphs (i)(4)(i) through (v) of this section.

(i) The identification of the near-field source or sources. For onsite sources, the documentation provided that the onsite source is excluded under § 63.640(g).

(ii) The monitoring location selected to determine the uniform background concentration or an indication that no uniform background concentration monitor will be used.

(iii) The location(s) selected for additional monitoring to determine the near-field source concentration contribution.

(iv) The identification of the fenceline monitoring locations impacted by the near-field source or sources.

(v) The appropriateness of the planned data reduction and calculations to determine the near-field source concentration contribution for each monitoring location.

(vi) If more frequent monitoring is proposed or if a monitoring station other than a passive diffusive tub monitoring station is proposed, the adequacy of the description of the measurement methods, measurement frequency, and recording frequency proposed and the adequacy of the rationale for using the alternative monitoring frequency or method.

(j) The owner or operator shall comply with the applicable recordkeeping and reporting requirements in § 63.655(h) and (i).

■ 30. Section 63.660 is added to read as follows:

§ 63.660 Storage vessel provisions.

On and after the applicable compliance date for a Group 1 storage vessel located at a new or existing source as specified in § 63.640(h), the owner or operator of a Group 1 storage vessel that is part of a new or existing source shall comply with the requirements in subpart WW or subpart SS of this part according to the requirements in paragraphs (a) through (i) of this section.

(a) As used in this section, all terms not defined in § 63.641 shall have the meaning given them in subpart A, subpart WW, or subpart SS of this part. The definitions of ''Group 1 storage vessel'' (item 2) and ''storage vessel'' in § 63.641 shall apply in lieu of the definition of ''storage vessel'' in § 63.1061.

(1) An owner or operator may use good engineering judgment or test results to determine the stored liquid weight percent total organic HAP for purposes of group determination. Data, assumptions, and procedures used in the determination shall be documented.

(2) When an owner or operator and the Administrator do not agree on whether the annual average weight percent organic HAP in the stored liquid is above or below 4 percent for a storage vessel at an existing source or above or below 2 percent for a storage vessel at a new source, an appropriate method (based on the type of liquid stored) as published by EPA or a consensus-based standards organization shall be used. Consensus-based standards organizations include, but are not limited to, the following: ASTM International (100 Barr Harbor Drive, P.O. Box CB700, West Conshohocken,

Pennsylvania 19428–B2959, (800) 262–1373, *http://www.astm.org*), the American National Standards Institute (ANSI, 1819 L Street NW., 6th Floor, Washington, DC 20036, (202) 293–8020, *http://www.ansi.org*), the American Gas Association (AGA, 400 North Capitol Street NW., 4th Floor, Washington, DC 20001, (202) 824–7000, *http://www.aga.org*), the American Society of Mechanical Engineers (ASME, Three Park Avenue, New York, NY 10016–5990, (800) 843–2763, *http://www.asme.org*), the American Petroleum Institute (API, 1220 L Street NW., Washington, DC 20005–4070, (202) 682–8000, *http://www.api.org*), and the North American Energy Standards Board (NAESB, 801 Travis Street, Suite 1675, Houston, TX 77002, (713) 356–0060, *http://www.naesb.org*).

(b) In addition to the options presented in §§ 63.1063(a)(2)(vii)(A), 63.1063(a)(2)(vii)(B), and 63.1064, an external floating roof storage vessel may comply with § 63.1063(a)(2)(vii) using a flexible enclosure system as described in item 6 of Appendix I: Acceptable Controls for Slotted Guidepoles Under the Storage Tank Emissions Reduction Partnership Program (available at *http://www.epa.gov/ttn/atw/petrefine/petrefpg.html).*

(c) For the purposes of this subpart, references shall apply as specified in paragraphs (c)(1) through (6) of this section.

(1) All references to ''the proposal date for a referencing subpart'' and ''the proposal date of the referencing subpart'' in subpart WW of this part mean June 30, 2014.

(2) All references to ''promulgation of the referencing subpart'' and ''the promulgation date of the referencing subpart'' in subpart WW of this part mean [THE DATE OF PUBLICATION OF THE FINAL RULE AMENDMENTS IN THE **FEDERAL REGISTER**].

(3) All references to ''promulgation date of standards for an affected source or affected facility under a referencing subpart'' in subpart SS of this part mean [THE DATE OF PUBLICATION OF THE FINAL RULE AMENDMENTS IN THE **FEDERAL REGISTER**].

(4) All references to ''the proposal date of the relevant standard established pursuant to CAA section 112(f)'' in subpart SS of this part mean June 30, 2014.

(5) All references to ''the proposal date of a relevant standard established pursuant to CAA section 112(d)'' in subpart SS of this part mean July 14, 1994.

(6) All references to the ''required control efficiency'' in subpart SS of this part mean reduction of organic HAP emissions by 95 percent or to an outlet concentration of 20 ppmv.

(d) For an existing storage vessel fixed roof that meets the definition of Group 1 storage vessel (item 2) in § 63.641 but not the definition of Group 1 storage vessel (item 1) in § 63.641, the requirements of § 63.1062 do not apply until the next time the storage vessel is completely emptied and degassed, or [THE DATE 10 YEARS AFTER PUBLICATION OF THE FINAL RULE AMENDMENTS IN THE **FEDERAL REGISTER**], whichever occurs first.

(e) Failure to perform inspections and monitoring required by this section shall constitute a violation of the applicable standard of this subpart.

(f) References in § 63.1066(a) to initial startup notification requirements do not apply.

(g) References to the Notification of Compliance Status in § 63.999(b) mean the Notification of Compliance Status required by § 63.655(f).

(h) References to the Periodic Reports in §§ 63.1066(b) and 63.999(c) mean the Periodic Report required by § 63.655(g).

(i) Owners or operators electing to comply with the requirements in subpart SS of this part for a Group 1 storage vessel must comply with the requirements in paragraphs (c)(1) through (3) of this section.

(1) If a flare is used as a control device, the flare shall meet the requirements of § 63.670 instead of the flare requirements in § 63.987.

(2) If a closed vent system contains a bypass line, the owner or operator shall comply with the provisions of either § 63.985(a)(3)(i) or (ii) for each closed vent system that contains bypass lines that could divert a vent stream to the atmosphere. Use of the bypass at any time to divert a Group 1 storage vessel to the atmosphere is an emissions standards violation. Equipment such as low leg drains and equipment subject to § 63.648 are not subject to this paragraph.

(3) If storage vessel emissions are routed to a fuel gas system or process, the fuel gas system or process shall be operating at all times when regulated emissions are routed to it. The exception in paragraph § 63.984(a)(1) does not apply.

■ 31. Section 63.661 is added to read as follows:

§ 63.661 Alternative means of emission limitation: Monitoring equipment leaks using optical gas imaging.

(a) *Applicability.* The owner or operator may only use an optical gas imaging instrument to screen for leaking equipment, as required by § 63.648, if the requirements in paragraphs (a)(1) through (3) of this section are met.

(1) The owner or operator may only use the optical gas imaging instrument as an alternative to provisions in § 63.648 that would otherwise require monitoring according to § 60.485(b) or § 63.180(b)(1) through (5), as applicable. The owner or operator shall continue to comply with all other requirements in § 63.648 (*e.g.,* weekly inspections of pumps; for relief valves, installation of a device that is capable of identifying and recording the time and duration of each pressure release, if applicable; sampling connection system requirements).

(2) The owner or operator must be in compliance with the fenceline monitoring provisions of § 63.658.

(3) The optical gas imaging instrument must be able to meet all of the criteria and requirements specified in part 60, Appendix K of this chapter, and the owner or operator shall conduct monitoring according to part 60, Appendix K of this chapter.

(b) *Compliance requirements.* The owner or operator shall meet the requirements of paragraphs (b)(1) through (3) of this section.

(1) The owner or operator shall identify the equipment and process units for which the optical gas imaging instrument will be used to identify leaks.

(2) The owner or operator shall repair leaking equipment as required in the applicable section of part 60, subpart VV of this chapter or subpart H of this part.

(3) Monitoring to confirm repair of leaking equipment must be conducted using the procedures referenced in paragraph (a)(2) of this section.

(c) *Recordkeeping.* The owner or operator shall comply with the applicable requirements in § 63.655(i).

■ 32. Section 63.670 is added to read as follows:

§ 63.670 Requirements for flare control devices.

On or before [THE DATE 3 YEARS AFTER THE DATE OF PUBLICATION OF THE FINAL RULE AMENDMENTS IN THE **FEDERAL REGISTER**], the owner or operator of a flare used as a control device for an emission point subject to this subpart shall meet the applicable requirements for flares as specified in paragraphs (a) through (q) of this section and the applicable requirements in § 63.671. The owner or operator may elect to comply with the requirements of paragraph (r) of this section in lieu of the requirements in paragraphs (d) through (f) of this section, as applicable.

(a) *Halogenated vent streams.* The owner or operator shall not use a flare

to control halogenated vent streams as defined in § 63.641.

(b) *Pilot flame presence.* The owner or operator shall operate each flare with a pilot flame present at all times when regulated material is routed to the flare. The pilot system must be equipped with an automated device to relight the pilot if extinguished. The owner or operator shall monitor for the presence of a pilot flame as specified in paragraph (g) of this section.

(c) *Visible emissions.* Each flare must be designed for and operated with no visible emissions, except for periods not to exceed a total of 5 minutes during any 2 consecutive hours. The owner or operator shall monitor for visible emissions from the flare as specified in paragraph (b) of this section.

(d) *Flare tip velocity.* For each flare, the owner or operator shall comply with either paragraph (d)(1) or (d)(2) of this section, provided the appropriate monitoring systems are in-place. If a total hydrocarbon analyzer is used for compositional analysis as allowed under section (j)(4) of this section, then the owner or operator must comply with paragraph (d)(1) of this section.

(1) Except as provided in paragraph (d)(2) of this section, the actual flare tip velocity (V_{tip}) must be less than 60 feet per second when regulated material is being routed to the flare. The owner or operator shall monitor V_{tip} using the procedures specified in paragraph (i) and (k) of this section.

(2) V_{tip} must be less than 400 feet per second and also less than the maximum allowed flare tip velocity (V_{max}) as calculated according to the following equation at all times regulated material is being routed to the flare. The owner or operator shall monitor V_{tip} using the procedures specified in paragraph (i) and (k) of this section and monitor gas composition and determine NHV_{vg} using the procedures specified in paragraphs (j) and (l) of this section.

$$Log_{10}(V_{max}) = \frac{NHV_{vg} + 1{,}212}{850}$$

Where:

V_{max} = Maximum allowed flare tip velocity, ft/sec.

NHV_{vg} = Net heating value of flare vent gas, as determined by paragraph (l)(4) of this section, Btu/scf.

1,212 = Constant.

850 = Constant.

(e) *Target combustion zone gas properties.* For each flare, the owner or operator shall comply with the applicable requirements in either paragraph (e)(1), (2), or (3) of this section. The owner or operator may elect to comply with any of these applicable requirements at any time (e.g., may elect to comply with the requirements in paragraph (e)(1) during certain flow conditions and comply with the requirements in paragraph (e)(2) or (e)(3) under different flow conditions) provided that the owner or operator has the appropriate monitoring equipment to determine compliance with the specified requirement.

(1) The net heating value of flare combustion zone gas (NHV_{cz}) must be greater than or equal to the target values in paragraphs (e)(1)(i) or (ii), as applicable, when regulated material is being routed to the flare. The owner or operator shall monitor and calculate NHV_{cz} as specified in paragraph (m) of this section.

(i) For flares meeting all three requirements in paragraph (e)(4) of this section, the target NHV_{cz} value is 380 British thermal units per standard cubic feet (Btu/scf).

(ii) For all flares other than those meeting all three requirements in paragraph (e)(4) of this section, the target NHV_{cz} value is 270 Btu/scf.

(2) The lower flammability limit of the combustion zone gas (LFL_{cz}) must be less than or equal to the target values in paragraphs (e)(2)(i) or (ii), as applicable, when regulated material is being routed to the flare. The owner or operator shall monitor and calculate LFL_{cz} as specified in paragraph (m) of this section.

(i) For flares meeting all three requirements in paragraph (e)(4) of this section, the target LFL_{cz} value is 0.11 volume fraction.

(ii) For all flares other than those meeting all three requirements in paragraph (e)(4) of this section, the target LFL_{cz} value is 0.15 volume fraction.

(3) The total volumetric fraction of hydrogen and combustible organic components present in the combustion zone gas (C_{cz}), as propane, must be greater than or equal to the target values in paragraphs (e)(3)(i) or (ii), as applicable, when regulated material is being routed to the flare. The owner or operator shall monitor and calculate C_{cz} as specified in paragraph (m) of this section.

(i) For flares meeting all three requirements in paragraph (e)(4) of this section, the target C_{cz} value is 0.23 volume fraction as propane.

(ii) For all flares other than those meeting all three requirements in paragraph (e)(4) of this section, the target C_{cz} value is 0.18 volume fraction as propane.

(4) More stringent combustion zone gas target properties apply only during those flare flow periods when all three conditions in paragraphs (e)(4)(i) through (iii) simultaneously exist. The owner or operator shall monitor and calculate hydrogen and cumulative olefin combustion zone concentrations as specified in paragraph (o) of this section:

(i) The concentration of hydrogen in the combustion zone is greater than 1.2 percent by volume.

(ii) The cumulative concentration of olefins in the combustion zone is greater than 2.5 percent by volume.

(iii) The cumulative concentration of olefins in the combustion zone plus the concentration of hydrogen in the combustion zone is greater than 7.4 percent by volume.

(f) *Target dilution parameters for flares with perimeter assist air.* For each flare actively receiving perimeter assist air, the owner or operator shall comply with the applicable requirements in either paragraph (f)(1), (2), or (3) of this section in addition to complying with the target combustion zone gas properties as specified in paragraph (e) of this section. The owner or operator may elect to comply with any of these applicable requirements at any time (e.g., may elect to comply with the requirements in paragraph (f)(1) during certain flow conditions and comply with the requirements in paragraph (f)(2) or (f)(3) under different flow conditions) provided that the owner or operator has the appropriate monitoring equipment to determine compliance with the specified requirement.

(1) The net heating value dilution parameter (NHV_{dil}) must be greater than or equal to the target values in paragraphs (f)(1)(i) or (ii), as applicable, when regulated material is being routed to the flare. The owner or operator shall monitor and calculate NHV_{dil} as specified in paragraph (n) of this section.

(i) For flares meeting all three requirements in paragraph (e)(4) of this section, the target NHV_{dil} value is 31

British thermal units per square foot (Btu/ft^2).

(ii) For all flares other than those meeting all three requirements in paragraph (e)(4) of this section, the target NHV_{dil} value is 22 Btu/ft^2.

(2) The lower flammability limit dilution parameter (LFL_{dil}) must be less than or equal to the target values in paragraphs (f)(2)(i) or (ii), as applicable, when regulated material is being routed to the flare. The owner or operator shall monitor and calculate LFL_{dil} as specified in paragraph (n) of this section.

(i) For flares meeting all three requirements in paragraph (e)(4) of this section, the target LFL_{dil} value is 1.6 volume fraction per foot (volume fraction/ft).

(ii) For all flares other than those meeting all three requirements in paragraph (e)(4) of this section, the target LFL_{dil} value is 2.2 volume fraction/ft.

(3) The combustibles concentration dilution parameter (C_{dil}) must be greater than or equal to the target values in paragraphs (f)(3)(i) or (ii), as applicable, when regulated material is being routed to the flare. The owner or operator shall monitor and calculate C_{dil} as specified in paragraph (n) of this section.

(i) For flares meeting all three requirements in paragraph (e)(4) of this section, the target C_{dil} value is 0.015 volume fraction-ft.

(ii) For all flares other than those meeting all three requirements in paragraph (e)(4) of this section, the target C_{cz} value is 0.012 volume fraction-ft.

(g) *Pilot flame monitoring.* The owner or operator shall continuously monitor the presence of the pilot flame(s) using a device (including, but not limited to, a thermocouple, ultraviolet beam sensor, or infrared sensor) capable of detecting that the pilot flame(s) is present.

(h) *Visible emissions monitoring.* The owner or operator shall monitor visible emissions while regulated materials are vented to the flare. An initial visible emissions demonstration must be conducted using an observation period of 2 hours using Method 22 at 40 CFR part 60, Appendix A–7. Subsequent visible emissions observations must be conducted at a minimum of once per day using an observation period of 5 minutes using Method 22 at 40 CFR part 60, Appendix A–7. If at any time the owner or operator sees visible emissions, even if the minimum required daily visible emission monitoring has already been performed, the owner or operator shall immediately begin an observation period of 5 minutes using Method 22 at 40 CFR part 60, Appendix A–7. If visible emissions are observed for more than one continuous minute during any 5-minute observation period, the observation period using Method 22 at 40 CFR part 60, Appendix A–7 must be extended to 2 hours.

(i) *Flare vent gas, steam assist and air assist flow rate monitoring.* The owner or operator shall install, operate, calibrate, and maintain a monitoring system capable of continuously measuring, calculating, and recording the volumetric flow rate in the flare header or headers that feed the flare. If assist air or assist steam is used, the owner or operator shall install, operate, calibrate, and maintain a monitoring system capable of continuously measuring, calculating, and recording the volumetric flow rate of assist air and/or assist steam used with the flare. If pre-mix assist air and perimeter assist are both used, the owner or operator shall install, operate, calibrate, and maintain a monitoring system capable of separately measuring, calculating, and recording the volumetric flow rate of premix assist air and perimeter assist air used with the flare.

(1) The flow rate monitoring systems must be able to correct for the temperature and pressure of the system and output parameters in standard conditions (i.e., a temperature of 20 °C [68 °F] and a pressure of 1 atm). The flare vent gas flow rate monitoring system(s) must also be able to output flow in actual conditions for use in the flare tip velocity calculation.

(2) Mass flow monitors may be used for determining volumetric flow rate of flare vent gas provided the molecular weight of the flare vent gas is determined using compositional analysis as specified in paragraph (j) of this section so that the mass flow rate can be converted to volumetric flow at standard conditions using the following equation.

$$Q_{vol} = \frac{Q_{mass} \times 385.3}{MWt}$$

Where:

Q_{vol} = Volumetric flow rate, standard cubic feet per second.

Q_{mass} = Mass flow rate, pounds per second.

385.3 = Conversion factor, standard cubic feet per pound-mole.

MWt = Molecular weight of the gas at the flow monitoring location, pounds per pound-mole.

(3) Mass flow monitors may be used for determining volumetric flow rate of assist air or assist steam. Use equation in paragraph (i)(2) of this section to convert mass flow rates to volumetric flow rates. Use a molecular weight of 18 pounds per pound-mole for assist steam and use a molecular weight of 29 pounds per pound-mole for assist air.

(4) Continuous pressure/temperature monitoring system(s) and appropriate engineering calculations may be used in lieu of a continuous volumetric flow monitoring systems provided the molecular weight of the gas is known. For assist steam, use a molecular weight of 18 pounds per pound-mole. For assist air, use a molecular weight of 29 pounds per pound-mole. For flare vent gas, molecular weight must be determined using compositional analysis as specified in paragraph (j) of this section.

(j) *Flare vent gas composition monitoring.* The owner or operator shall determine the concentration of individual components in the flare vent gas using either the methods provided in paragraphs (j)(1) or (j)(2) of this section, to assess compliance with the operating limits in paragraph (e) of this section and, if applicable, paragraphs (d) and (f) of this section. Alternatively, the owner or operator may elect to directly monitor the net heating value of the flare vent gas following the methods provided in paragraphs (j)(3) of this section or the combustibles concentration following the methods provided in paragraphs (j)(4) of this section.. The owner or operator electing to directly monitor the net heating value of the flare vent gas must comply with the net heating value operating limits in paragraph (e) and, if applicable, paragraph (f) of this section. The owner or operator electing to directly monitor the combustibles concentration in the flare vent gas must comply with the combustibles concentration operating limits in paragraph (e) and, if applicable, paragraph (f) of this section, and must comply with the maximum velocity requirements in paragraph (d)(1) of this section.

(1) Except as provided in paragraph (j)(5) of this section, the owner or operator shall install, operate, calibrate, and maintain a monitoring system capable of continuously measuring (i.e., at least once every 15 minutes), calculating, and recording the individual component concentrations present in the flare vent gas.

(2) Except as provided in paragraph (j)(5) of this section, the owner or operator shall install, operate, and maintain a grab sampling system capable of collecting an evacuated canister sample for subsequent compositional analysis at least once every eight hours while there is flow of regulated material to the flare. Subsequent compositional analysis of the samples must be performed according to Method 18 of 40 CFR part

60, Appendix A–6, ASTM D1945–03 (Reapproved 2010) (incorporated by reference—see § 63.14), or ASTM UOP539–12 (incorporated by reference—see § 63.14).

(3) The owner or operator shall install, operate, calibrate, and maintain a monitoring system capable of continuously measuring, calculating, and recording $NHV_{vg.}$ at standard conditions.

(4) The owner or operator shall install, operate, calibrate, and maintain a monitoring system capable of continuously measuring, calculating, and recording total hydrocarbon content (as propane) as a surrogate for combustibles concentration.

(5) Direct compositional monitoring is not required for pipeline quality natural gas streams. In lieu of monitoring the composition of a pipeline quality natural gas stream, the following composition can be used for any pipeline quality natural gas stream.

(i) 93.2 volume percent (vol %) methane.

(ii) 3.2 vol % ethane.

(iii) 0.6 vol % propane.

(iv) 0.3 vol % butane.

(v) 2.0 vol % hydrogen.

(vi) 0.7 vol % nitrogen.

(k) *Calculation methods for determining compliance with* V_{tip} *operating limits.* The owner or operator shall determine V_{tip} on a 15-minute block average basis according to the following requirements.

(1) The owner or operator shall use design and engineering principles to determine the unobstructed cross sectional area of the flare tip. The unobstructed cross sectional area of the flare tip is the total tip area that vent gas can pass through. This area does not include any stability tabs, stability rings, and upper steam or air tubes because vent gas does not exit through them.

(2) The owner or operator shall determine the cumulative volumetric flow of vent gas for each 15-minute block average period using the data from the continuous flow monitoring system required in paragraph (i) of this section according to the following requirements, as applicable.

(i) Use set 15-minute time periods starting at 12 midnight to 12:15 a.m., 12:15 a.m. to 12:30 a.m. and so on concluding at 11:45 p.m. to midnight when calculating 15-minute block average flow volumes.

(ii) If continuous pressure/temperature monitoring system(s) and engineering calculations are used as allowed under paragraph (i)(4) of this section, the owner of operator shall, at a minimum, determine the 15-minute block average temperature and pressure from the monitoring system and use those values to perform the engineering calculations to determine the cumulative flow over the 15-minute block average period. Alternatively, the owner or operator may divide the 15-minute block average period into equal duration subperiods (e.g., three 5-minute periods) and determine the average temperature and pressure for each subperiod, perform engineering calculations to determine the flow for each subperiod, then add the volumetric flows for the subperiods to determine the cumulative volumetric flow of vent gas for the 15-minute block average period.

(3) The 15-minute block average V_{tip} shall be calculated using the following equation.

$$V_{tip} = \frac{Q_{cum}}{Area \times 900}$$

Where:

V_{tip} = Flare tip velocity, feet per second.

Q_{cum} = Cumulative volumetric flow over 15-minute block average period, actual cubic feet.

Area = Unobstructed area of the flare tip, square feet.

900 = Conversion factor, seconds per 15-minute block average.

(4) If the owner or operator chooses to comply with paragraph (d)(2) of this section, the owner or operator shall also determine the net heating value of the flare vent gas following the requirements in paragraph (j) and (l) of this section and calculate V_{max} using the equation in paragraph (d)(2) of this section in order to compare V_{tip} to V_{max} on a 15-minute block average basis.

(l) *Calculation methods for determining flare vent gas parameters.* The owner or operator shall determine the net heating value, lower flammability limit, and/or combustibles concentration vent gas of the flare (NHV_{vg}, LFL_{vg}, and/or C_{vg}, respectively) based on the composition monitoring data on a 15-minute block average basis according to the following requirements.

(1) Use set 15-minute time periods starting at 12 midnight to 12:15 a.m., 12:15 a.m. to 12:30 a.m. and so on concluding at 11:45 p.m. to midnight when calculating 15-minute block averages.

(2) When a continuous monitoring system is used to determine flare vent gas composition, net heating value, or total hydrocarbon content:

(i) Use the results from the first sample collected during an event, (for periodic flare vent gas flow events) for the first and second 15-minute block associated with that event.

(ii) For all other 15-minute block periods, use the results that are available from the most recent sample prior to the 15-minute block period for that 15-minute block period. For the purpose of this requirement, use the time that the results become available rather than the time the sample was collected. For example, if a sample is collected at 12:25 a.m. and the analysis is completed at 12:38 a.m., the results are available at 12:38 a.m. and these results would be used to determine compliance during the 15-minute block period from 12:45 a.m. to 1:00 a.m.

(3) When grab samples are used to determine flare vent gas composition:

(i) Use the analytical results from the first grab sample collected for an event for all 15-minute periods from the start of the event through the 15-minute block prior to the 15-minute block in which a subsequent grab sample is collected.

(ii) Use the results from subsequent grab sampling events for all 15 minute periods starting with the 15-minute block in which the sample was collected and ending with the 15-minute block prior to the 15-minute block in which the next grab sample is collected. For the purpose of this requirement, use the time the sample was collected rather than the time the analytical results become available.

(4) The owner or operator shall determine NHV_{vg} from compositional analysis data by using the following equation. If the owner or operator uses a monitoring system(s) capable of continuously measuring, calculating, and recording NHV_{vg}, as provided in paragraph (j)(3) of this section, the owner or operator shall use the NHV_{vg} as determined by the continuous NHV_{vg} monitor.

$$NHV_{vg} = \sum_{i=1}^{n} x_i NHV_i$$

Where:

NHV_{vg} = Net heating value of flare vent gas, Btu/scf.

i = Individual component in flare vent gas.

n = Number of components in flare vent gas.

x_i = Concentration of component i in flare vent gas, volume fraction.

NHV_i = Net heating value of component i according to table 12 of this subpart, Btu/scf. If the component is not specified in table 12 of this subpart, the heats of combustion may be determined using any published values where the net enthalpy per mole of offgas is based on combustion at 25 °C and 1 atmosphere (or constant pressure) with offgas water in the gaseous state, but the standard temperature for determining the volume corresponding to one mole of vent gas is 20 °C.

(5) The owner or operator shall calculate LFL_{vg} using the following equation:

$$LFL_{vg} = \frac{1}{\sum_{i=1}^{n}\left(\frac{\chi_i}{LFL_i}\right)}$$

Where:

LFL_{vg} = Lower flammability limit of flare vent gas, volume fraction.

n = Number of components in the vent gas.

i = Individual component in the vent gas.

χ_i = Concentration of component i in the vent gas, volume percent (vol %).

LFL_i = Lower flammability limit of component i according to table 12 of this subpart, vol %. If the component is not specified in table 12 of this subpart, the owner or operator shall use the LFL value as published in Appendix A of Flammability Characteristics of Combustible Gases and Vapors, U.S. Bureau of Mines, Bulletin 627, 1965 (incorporated by reference—see § 63.14). All inerts, including nitrogen, shall be assumed to have an infinite lower flammability limit (e.g., $LFL_{N2} = \infty$, so that $\chi_{N2}/LFL_{N2} = 0$).

(6) The owner or operator shall calculate C_{vg} using the following equation. If the owner or operator uses a total hydrocarbon analyzer, the owner or operator may substitute the "$\Sigma\chi_i$" term in the following equation with the total volumetric hydrocarbon concentration present in the flare vent gas (vol % as propane), and the owner or operator may choose to ignore the concentration of hydrogen in the flare vent gas.

$$C_{vg} = \frac{\left[\sum_{i=1}^{n}\left(\frac{CMN_i \times \chi_i}{3}\right) + \chi_h\right]}{100\%}$$

Where:

C_{vg} = Total volumetric fraction of hydrogen and combustible organic components present in the flare vent gas, volume fraction. For the purposes of C_{vg}, carbon dioxide is not considered to be a combustible organic component, but carbon monoxide may be included in C_{vg}.

n = Number of individual combustible organic components in flare vent gas.

i = Individual combustible organic component in flare vent gas.

χ_i = Concentration of combustible organic component *i* in flare vent gas, vol %.

CMN_i = Carbon mole number of combustible organic component *i* in flare vent gas, mole carbon atoms per mole of compound. E.g., CMN for ethane (C_2H_6) is 2; CMN for propane (C_3H_8) is 3.

χ_h = Concentration of hydrogen in flare vent gas, vol %.

100% = Constant, used to convert volume percent to volume fraction.

(m) *Calculation methods for determining combustion zone parameters.* The owner or operator shall determine the net heating value, lower flammability limit and combustibles concentration of the combustion zone gas (NHV_{cz}, LFL_{cz}, and C_{cz}, respectively) based on the vent gas and assist gas flow rates on a 15-minute block average basis according to the following requirements. For periods when there is no assist steam flow or premix assist air flow, the combustion zone parameters are equal to the vent gas parameters.

(1) The owner or operator shall calculate NHV_{cz} using the following equation:

$$NHV_{cz} = \frac{Q_{vg} \times NHV_{vg}}{\left(Q_{vg} + Q_s + Q_{a,premix}\right)}$$

Where:

NHV_{cz} = Net heating value of combustion zone gas, Btu/scf.

NHV_{vg} = Net heating value of flare vent gas for the 15-minute block period, Btu/scf.

Q_{vg} = Cumulative volumetric flow of flare vent gas during the 15-minute block period, scf.

Q_s = Cumulative volumetric flow of total steam during the 15-minute block period, scf.

$Q_{a,premix}$ = Cumulative volumetric flow of premix assist air during the 15-minute block period, scf.

(2) The owner or operator shall calculate LFL_{cz} using the following equation:

$$LFL_{cz} = \frac{LFL_{vg} \times \left(Q_{vg} + Q_s + Q_{a,premix}\right)}{Q_{vg}}$$

Where:

LFL_{cz} = Lower flammability limit of combustion zone gas, volume fraction.

LFL_{vg} = Lower flammability limit of flare vent gas determined for the 15-minute block period, volume fraction.

Q_{vg} = Cumulative volumetric flow of flare vent gas during the 15-minute block period, scf.

Q_s = Cumulative volumetric flow of total steam during the 15-minute block period, scf.

$Q_{a,premix}$ = Cumulative volumetric flow of premix assist air during the 15-minute block period, scf.

(3) The owner or operator shall calculate C_{cz} using the following equation:

$$C_{cz} = \frac{Q_{vg} \times C_{vg}}{\left(Q_{vg} + Q_s + Q_{a,premix}\right)}$$

Where:

C_{cz} = Combustibles concentration in the combustion zone gas, volume fraction.

C_{vg} = Combustibles concentration of flare vent gas determined for the 15-minute block period, volume fraction.

Q_{vg} = Cumulative volumetric flow of flare vent gas during the 15-minute block period, scf.

Q_s = Cumulative volumetric flow of total steam during the 15-minute block period, scf.

$Q_{a,premix}$ = Cumulative volumetric flow of premix assist air during the 15-minute block period, scf.

(n) *Calculation methods for determining dilution parameters.* The owner or operator shall determine the net heating value, lower flammability limit and combustibles concentration dilution parameters (NHV_{dil}, LFL_{dil}, and C_{dil}, respectively) based on the vent gas and perimeter assist air flow rates on a 15-minute block average basis according to the following requirements only during periods when perimeter assist air is used. For 15-minute block periods when there is no cumulative volumetric flow of perimeter assist air, the dilution parameters do not need to be calculated.

(1) The owner or operator shall calculate NHV_{dil} using the following equation:

$$NHV_{dil} = \frac{Q_{vg} \times Diam \times NHV_{vg}}{\left(Q_{vg} + Q_s + Q_{a,premix} + Q_{a,perimeter}\right)}$$

where:

NHV_{dil} = Net heating value of combustion zone gas, Btu/ft^2

NHV_{vg} = Net heating value of flare vent gas determined for the 15-minute block period, Btu/scf.

Q_{vg} = Cumulative volumetric flow of flare vent gas during the 15-minute block period, scf.

Diam = Effective diameter of the unobstructed area of the flare tip for flare vent gas flow, ft. Use the area as determined in paragraph (k)(1) of this section and determine the diameter as $Diam = 2 \times \sqrt{Area/\pi}$

Q_s = Cumulative volumetric flow of total steam during the 15-minute block period, scf.

$Q_{a,premix}$ = Cumulative volumetric flow of premix assist air during the 15-minute block period, scf.

$Q_{a,perimiter}$ = Cumulative volumetric flow of perimeter assist air during the 15-minute block period, scf

(2) The owner or operator shall calculate LFL_{dil} using the following equation:

$$LFL_{dil} = \frac{LFL_{vg} \times \left(Q_{vg} + Q_s + Q_{a,premix} + Q_{a,perimeter}\right)}{Q_{vg} \times Diam}$$

where:

LFL_{dil} = Lower flammability limit of combustion zone gas, ft^{-1}.

LFL_{vg} = Lower flammability limit of flare vent gas determined for the 15-minute block period, volume fraction.

Q_{vg} = Cumulative volumetric flow of flare vent gas during the 15-minute block period, scf.

Diam = Effective diameter of the unobstructed area of the flare tip for flare vent gas flow, ft. Use the area as determined in paragraph (k)(1) of this section and determine the diameter as $Diam = 2 \times \sqrt{Area/\pi}$

Q_s = Cumulative volumetric flow of total steam during the 15-minute block period, scf.

$Q_{a,premix}$ = Cumulative volumetric flow of premix assist air during the 15-minute block period, scf.

$Q_{a,perimiter}$ = Cumulative volumetric flow of perimeter assist air during the 15-minute block period, scf.

(3) The owner or operator shall calculate C_{dil} using the following equation:

$$C_{dil} = \frac{Q_{vg} \times Diam \times C_{vg}}{\left(Q_{vg} + Q_s + Q_{a,premix} + Q_{a,perimeter}\right)}$$

where:

C_{cz} = Combustibles concentration in the combustion zone gas, volume fraction.

C_{vg} = Combustibles concentration of flare vent gas determined for the 15-minute block period, volume fraction.

Q_{vg} = Cumulative volumetric flow of flare vent gas during the 15-minute block period, scf.

Diam = Effective diameter of the unobstructed area of the flare tip for flare vent gas flow, ft. Use the area as determined in paragraph (k)(1) of this section and determine the diameter as $Diam = 2 \times \sqrt{Area/\pi}$

Q_s = Cumulative volumetric flow of total steam during the 15-minute block period, scf.

$Q_{a,premix}$ = Cumulative volumetric flow of premix assist air during the 15-minute block period, scf.

$Q_{a,perimeter}$ = Cumulative volumetric flow of perimeter assist air during the 15-minute block period, scf.

(o) *Special provisions for assessing olefins and hydrogen combustion zone concentrations.* The owner or operator shall determine the olefins and hydrogen content of the flare vent gas and calculate the combustion zone

concentrations for the purposes of assessing the criteria in paragraph (e)(4) of this section on a 15-minute block average according to the following requirements.

(1) The olefins concentration shall be determined as the cumulative sum of the following flare gas constituents: ethylene, acetylene, propylene, propadiene, all isomers of n- or iso-butene, and all isomers of butadiene.

(2) If individual component concentrations are determined following the methods specified in paragraphs (j)(1) or (j)(2) of this section, the measured vent gas concentrations shall be used to determine the hydrogen, olefins, and hydrogen plus olefins concentration in the combustion zone using the following general equation. The methods specified in paragraphs (l)(1) through (3) of this section, as applicable, shall be used to assign the vent gas concentration results to a specific 15-minute block period.

$$A_{cz} = \frac{Q_{vg} \times A_{vg}}{\left(Q_{vg} + Q_s + Q_{a,premix}\right)}$$

Where:

A_{cz} = Concentration of target compound(s) ''A'' (representing either the olefins concentration, the hydrogen concentration, or the sum of the olefins and hydrogen concentration) in the combustion zone gas, volume fraction.

A_{vg} = Concentration of target compound(s) ''A'' (representing either the olefins concentration, the hydrogen concentration, or the sum of the olefins and hydrogen concentration) in the flare vent gas determined for the 15-minute block period, volume fraction.

Q_{vg} = Cumulative volumetric flow of flare vent gas during the 15-minute block period, scf.

Q_s = Cumulative volumetric flow of total steam during the 15-minute block period, scf.

$Q_{a,\ premix}$ = Cumulative volumetric flow of premix assist air during the 15-minute block period, scf.

(3) If NHV_{vg} or total hydrocarbon monitoring systems are used as provided in paragraphs (j)(3) or (j)(4) of this section, the owner or operator may elect to determine the hydrogen and olefins concentrations using any of the following methods.

(i) The owner or operator may elect to assume the hydrogen concentration, the olefins concentration, and the olefins plus hydrogen concentration in the combustion zone gas exceed all three criteria in (e)(4) at all times without making specific measurements of olefins or hydrogen concentrations.

(ii) The owner or operator may elect to use process knowledge and engineering calculations to determine the highest flare vent gas concentrations of olefins and hydrogen that can reasonably be expected to be discharged to the flare and the highest concentration of olefins plus hydrogen that can reasonably be expected to be discharged to the flare while the flare vent gas concentrations exceed the target combustion zone concentrations in paragraphs (e)(4)(i) and (ii) of this section at the same time. The owner or operator shall take daily flare vent gas samples for fourteen days or for 7 flaring events, whichever results in the greatest number of grab samples to verify that the calculated values are representative of the highest concentrations that reasonably be expected to be discharged to the flare.

(A) If the highest flare vent gas concentrations of olefins, hydrogen, and olefins plus hydrogen that can reasonably be expected to be discharged to the flare do not exceed all three combustion zone concentration criteria in paragraph (e)(4) of this section, for example, if the flare does not service any process units that contain olefins, then the engineering assessment is sufficient to document that all three criteria in paragraph (e)(4) of this section are not met and that the more stringent operating limits do not apply at any time.

(B) If the highest flare vent gas concentrations of olefins, hydrogen, and olefins plus hydrogen that can reasonably be expected to be discharged to the flare exceed all three combustion zone concentration criteria in paragraph (e)(4), then the owner or operator will use the concentrations determined from the engineering analysis as the vent gas concentrations that exist in the vent gas at all times and use the equation in paragraph (o)(2) of this section to determine the combustion zone concentrations of olefins.

(C) If the operation of process units connected to the flares change or new connections are made to the flare and these changes can reasonably be expected to alter the highest vent gas concentrations of olefins, hydrogen, and/or olefins plus hydrogen received by the flare, a new engineering assessment and sampling period for verification will be conducted following the requirements of paragraph (o)(3)(ii) of this section.

(p) *Flare monitoring records.* The owner or operator shall keep the records specified in § 63.655(i)(9).

(q) *Reporting.* The owner or operator shall comply with the reporting requirements specified in § 63.655(g)(11).

(r) *Alternative means of emissions limitation.* An owner or operator may request approval from the Administrator for site-specific operating limits that shall apply specifically to a selected flare. Site-specific operating limits include alternative threshold values for the parameters specified in paragraphs (d) through (f) of this section as well as threshold values for operating parameters other than those specified in paragraphs (d) through (f) of this section. The owner or operator must demonstrate that the flare achieves 96.5 percent combustion efficiency (or 98 percent destruction efficiency) using the site-specific operating limits based on a performance test as described in paragraph (r)(1) of this section. The request shall include information as described in paragraph (r)(2) of this section. The request shall be submitted and followed as described in paragraph (r)(3) of this section.

(1) The owner or operator shall prepare and submit a site-specific test plan and receive approval of the site-specific test plan prior to conducting any flare performance test intended for use in developing site-specific operating limits. The site-specific test plan shall include, at a minimum, the elements specified in paragraphs (r)(1)(i) through (ix) of this section. Upon approval of the site-specific test plan, the owner or operator shall conduct a performance test for the flare following the procedures described in the site-specific test plan.

(i) The design and dimensions of the flare, flare type (air-assisted only, steam-assisted only, air- and steam-assisted, pressure-assisted, or non-assisted), and description of gas being flared, including quantity of gas flared, frequency of flaring events (if periodic), expected net heating value of flare vent gas, minimum total steam assist rate.

(ii) The operating conditions (vent gas compositions, vent gas flow rates and assist flow rates, if applicable) likely to be encountered by the flare during normal operations and the operating conditions for the test period.

(iii) A description of (including sample calculations illustrating) the planned data reduction and calculations to determine the flare combustion or destruction efficiency.

(iv) Site-specific operating parameters to be monitored continuously during the flare performance test. These parameters may include but are not limited to vent gas flow rate, steam and/or air assist flow rates, and flare vent gas composition. If new operating parameters are proposed for use other than those specified in paragraphs (d) through (f) of this section, an explanation of the relevance of the proposed operating parameter(s) as an

indicator of flare combustion performance and why the alternative operating parameter(s) can adequately ensure that the flare achieves the required combustion efficiency.

(v) A detailed description of the measurement methods, monitored pollutant(s), measurement locations, measurement frequency, and recording frequency proposed for both emission measurements and flare operating parameters.

(vi) A description of (including sample calculations illustrating) the planned data reduction and calculations to determine the flare operating parameters.

(vii) The minimum number and length of test runs and range of operating values to be evaluated during the performance test. A sufficient number of test runs shall be conducted to identify the point at which the combustion/destruction efficiency of the flare deteriorates.

(viii) If the flare can receive vent gases containing olefins and hydrogen above the levels specified for the combustion zone gas in paragraph (e)(4) of this section, a sufficient number of tests must be conducted while exceeding these limits to assess whether more stringent operating limits are required under these conditions.

(ix) Test schedule.

(2) The request for flare-specific operating limits shall include sufficient and appropriate data, as determined by the Administrator, to allow the Administrator to confirm that the selected site-specific operating limit(s) adequately ensures that the flare destruction efficiency is 98 percent or greater or that the flare combustion efficiency is 96.5 percent or greater at all times. At a minimum, the request shall contain the information described in paragraphs (r)(2)(i) through (iv) of this section.

(i) The design and dimensions of the flare, flare type (air-assisted only, steam-assisted only, air- and steam-assisted, pressure-assisted, or non-assisted), and description of gas being flared, including quantity of gas flared, frequency of flaring events (if periodic), expected net heating value of flare vent gas, minimum total steam assist rate.

(ii) Results of each performance test run conducted, including, at a minimum:

(A) The measured combustion/destruction efficiency.

(B) The measured or calculated operating parameters for each test run. If operating parameters are calculated, the raw data from which the parameters are calculated must be included in the test report.

(C) Measurement location descriptions for both emission measurements and flare operating parameters.

(D) Description of sampling and analysis procedures (including number and length of test runs) and any modifications to standard procedures. If there were deviations from the approved test plan, a detailed description of the deviations and rationale why the test results or calculation procedures used are appropriate.

(E) Operating conditions (e.g., vent gas composition, assist rates, etc.) that occurred during the test.

(F) Quality assurance procedures.

(G) Records of calibrations.

(H) Raw data sheets for field sampling.

(I) Raw data sheets for field and laboratory analyses.

(J) Documentation of calculations.

(iii) The selected flare-specific operating limit values based on the performance test results, including the averaging time for the operating limit(s), and rationale why the selected values and averaging times are sufficiently stringent to ensure proper flare performance. If new operating parameters or averaging times are proposed for use other than those specified in paragraphs (d) through (f) of this section, an explanation of why the alternative operating parameter(s) or averaging time(s) adequately ensures the flare achieves the required combustion efficiency.

(iv) The means by which the owner or operator will document on-going, continuous compliance with the selected flare-specific operating limit(s), including the specific measurement location and frequencies, calculation procedures, and records to be maintained.

(3) The request shall be submitted as described in paragraphs (r)(3)(i) through (iv) of this section.

(i) The owner or operator may request approval from the Administrator at any time upon completion of a performance test conducted following the methods in an approved site-specific test plan for an operating limit(s) that shall apply specifically to that flare.

(ii) The request must be submitted to the Administrator for approval. The owner or operator must continue to comply with the applicable standards for flares in this subpart until the requirements in 40 CFR 63.6(g)(1) are met and a notice is published in the **Federal Register** allowing use of such an alternative means of emission limitation.

(iii) The request shall also be submitted to the following address: U.S. Environmental Protection Agency, Office of Air Quality Planning and Standards, Sector Policies and Programs Division, U.S. EPA Mailroom (E143–01), Attention: Refinery Sector Lead, 109 T.W. Alexander Drive, Research Triangle Park, NC 27711. Electronic copies in lieu of hard copies may also be submitted to *refineryrtr@epa.gov*.

(iv) If the Administrator finds any deficiencies in the request, the request must be revised to address the deficiencies and be re-submitted for approval within 45 days of receipt of the notice of deficiencies. The owner or operator must comply with the revised request as submitted until it is approved.

(4) The approval process for a request for a flare-specific operating limit(s) is described in paragraphs (r)(4)(i) through (iii) of this section.

(i) Approval by the Administrator of a flare-specific operating limit(s) request will be based on the completeness, accuracy and reasonableness of the request. Factors that the EPA will consider in reviewing the request for approval include, but are not limited to, those described in paragraphs (r)(4)(i)(A) through (C) of this section.

(A) The description of the flare design and operating characteristics.

(B) If a new operating parameter(s) other than those specified in paragraphs (d) through (f) of this section is proposed, the explanation of how the proposed operating parameter(s) serves a good indicator(s) of flare combustion performance.

(C) The results of the flare performance test and the establishment of operating limits that ensures that the flare destruction efficiency is 98 percent or greater or that the flare combustion efficiency is 96.5 percent or greater at all times.

(D) The completeness of the flare performance test report.

(ii) If the request is approved by the Administrator, a flare-specific operating limit(s) will be established at the level(s) demonstrated in the approved request.

(iii) If the Administrator finds any deficiencies in the request, the request must be revised to address the deficiencies and be re-submitted for approval.

33. Section 63.671 is added to read as follows:

§ 63.671 Requirements for flare monitoring systems.

(a) *Operation of CPMS.* For each CPMS installed to comply with applicable provisions in § 63.670, the owner or operator shall install, operate, calibrate, and maintain the CPMS as

specified in paragraphs (a)(1) through (8) of this section.

(1) All monitoring equipment must meet the minimum accuracy, calibration and quality control requirements specified in table 13 of this subpart.

(2) The owner or operator shall ensure the readout (that portion of the CPMS that provides a visual display or record) or other indication of the monitored operating parameter from any CPMS required for compliance is readily accessible onsite for operational control or inspection by the operator of the source.

(3) All CPMS must complete a minimum of one cycle of operation (sampling, analyzing and data recording) for each successive 15-minute period.

(4) Except for maintenance periods, instrument adjustments or checks to maintain precision and accuracy, calibration checks, and zero and span adjustments, the owner or operator shall operate all CPMS and collect data continuously when regulated emissions are routed to the flare.

(5) The owner or operator shall operate, maintain, and calibrate each CPMS according to the CPMS monitoring plan specified in paragraph (b) of this section.

(6) For each CPMS, the owner or operator shall comply with the out-of-control procedures described in paragraphs (c) of this section. The CPMS monitoring plan must be submitted to the Administrator for approval upon request.

(7) The owner or operator shall reduce data from a CPMS as specified in paragraph (d) of this section.

(8) The CPMS must be capable of measuring the appropriate parameter over the range of values expected for that measurement location. The data recording system associated with each CPMS must have a resolution that is equal to or better than the required system accuracy.

(b) *CPMS monitoring plan.* The owner or operator shall develop and implement a CPMS quality control program documented in a CPMS monitoring plan. The owner or operator shall have the CPMS monitoring plan readily available on-site at all times and shall submit a copy of the CPMS monitoring plan to the Administrator upon request by the Administrator. The CPMS monitoring plan must contain the information listed in paragraphs (b)(1) through (5) of this section.

(1) Identification of the specific flare being monitored and the flare type (air-assisted only, steam-assisted only, air- and steam-assisted, pressure-assisted, or non-assisted).

(2) Identification of the parameter to be monitored by the CPMS and the expected parameter range, including worst case and normal operation.

(3) Description of the monitoring equipment, including the information specified in (c)(3)(i) through (viii) of this section.

(i) Manufacturer and model number for all monitoring equipment components.

(ii) Performance specifications, as provided by the manufacturer, and any differences expected for this installation and operation.

(iii) The location of the CPMS sampling probe or other interface and a justification of how the location meets the requirements of paragraph (a)(1) of this section.

(iv) Placement of the CPMS readout, or other indication of parameter values, indicating how the location meets the requirements of paragraph (a)(2) of this section.

(v) Span of the analyzer. The span must encompass all expected concentrations and meet the requirements of paragraph (b)(10) of this section.

(vi) How data outside of the analyzer's span will be handled and the corrective action that will be taken to reduce and eliminate such occurrences in the future.

(vii) Identification of the parameter detected by the parametric signal analyzer and the algorithm used to convert these values into the operating parameter monitored to demonstrate compliance, if the parameter detected is different from the operating parameter monitored.

(4) Description of the data collection and reduction systems, including the information specified in paragraphs (b)(4)(i) through (iii) of this section.

(i) A copy of the data acquisition system algorithm used to reduce the measured data into the reportable form of the standard and to calculate the applicable averages.

(ii) Identification of whether the algorithm excludes data collected during CPMS breakdowns, out-of-control periods, repairs, maintenance periods, instrument adjustments or checks to maintain precision and accuracy, calibration checks, and zero (low-level), mid-level (if applicable) and high-level adjustments.

(iii) If the data acquisition algorithm does not exclude data collected during CPMS breakdowns, out-of-control periods, repairs, maintenance periods, instrument adjustments or checks to maintain precision and accuracy, calibration checks, and zero (low-level), mid-level (if applicable) and high-level adjustments, a description of the procedure for excluding this data when the averages calculated as specified in paragraph (e) of this section are determined.

(5) Routine quality control and assurance procedures, including descriptions of the procedures listed in paragraphs (c)(5)(i) through (vi) of this section and a schedule for conducting these procedures. The routine procedures must provide an assessment of CPMS performance.

(i) Initial and subsequent calibration of the CPMS and acceptance criteria.

(ii) Determination and adjustment of the calibration drift of the CPMS.

(iii) Daily checks for indications that the system is responding. If the CPMS system includes an internal system check, the owner or operator may use the results to verify the system is responding, as long as the owner or operator checks the internal system results daily for proper operation and the results are recorded.

(iv) Preventive maintenance of the CPMS, including spare parts inventory.

(v) Data recording, calculations and reporting.

(vi) Program of corrective action for a CPMS that is not operating properly.

(c) *Out-of-control periods.* For each CPMS, the owner or operator shall comply with the out-of-control procedures described in paragraphs (c)(1) and (2) of this section.

(1) A CPMS is out-of-control if the zero (low-level), mid-level (if applicable) or high-level calibration drift exceeds two times the accuracy requirement of table 13 of this subpart.

(2) When the CPMS is out of control, the owner or operator shall take the necessary corrective action and repeat all necessary tests that indicate the system is out of control. The owner or operator shall take corrective action and conduct retesting until the performance requirements are below the applicable limits. The beginning of the out-of-control period is the hour a performance check (*e.g.,* calibration drift) that indicates an exceedance of the performance requirements established in this section is conducted. The end of the out-of-control period is the hour following the completion of corrective action and successful demonstration that the system is within the allowable limits. The owner or operator shall not use data recorded during periods the CPMS is out of control in data averages and calculations, used to report emissions or operating levels, as specified in paragraph (d)(3) of this section.

(d) *CPMS data reduction.* The owner or operator shall reduce data from a

CPMS as specified in paragraphs (d)(1) through (3) of this section.

(1) The owner or operator may round the data to the same number of significant digits used in that operating limit.

(2) Periods of non-operation of the process unit (or portion thereof) resulting in cessation of the emissions to which the monitoring applies must not be included in the 15-minute block averages.

(3) Periods when the CPMS is out of control must not be included in the 15-minute block averages.

(e) *Additional requirements for gas chromatographs.* For monitors used to determine compositional analysis for net heating value per § 63.670(j)(1), the gas chromatograph must also meet the requirements of paragraphs (e)(1) through (3) of this section.

(1) The quality assurance requirements are in table 13 of this subpart.

(2) The calibration gases must meet one of the following options:

(i) The owner or operator must use a calibration gas or multiple gases that include all of the compounds that exist in the flare gas stream. All of the calibration gases may be combined in one cylinder. If multiple calibration gases are necessary to cover all compounds, the owner or operator must calibrate the instrument on all of the gases.

(ii) The owner or operator must use a surrogate calibration gas consisting of C1 through C7 normal hydrocarbons. All of the calibration gases may be combined in one cylinder. If multiple calibration gases are necessary to cover all compounds, the owner or operator must calibrate the instrument on all of the gases.

(3) If the owner or operator chooses to use a surrogate calibration gas under paragraph (e)(2)(ii) of this section, the owner or operator must comply with the following paragraphs.

(i) Use the response factor for the nearest normal hydrocarbon (i.e., n-alkane) in the calibration mixture to quantify unknown components detected in the analysis.

(ii) Unknown compounds that elute after n-heptane must either be identified and quantified using an identical compound standard, or the owner or operator must extend the calibration range to include the additional normal hydrocarbons necessary to perform the unknown hydrocarbon quantitation procedure.

■ 34. Table 6 to Subpart CC is amended by:

■ a. Revising the entry ''63.5(d)(1)(ii)'';

■ b. Revising the entry ''63.5(f)'';

■ c. Removing the entry ''63.6(e)'';

■ d. Adding, in numerical order, the entries ''63.6(e)(1)(i) and (ii)'' and ''63.6(e)(1)(iii)'';

■ e. Revising the entries ''63.6(e)(3)(i)'' and ''63.6(e)(3)(iii)–63.6(e)(3)(ix)'';

■ f. Revising the entry ''63.6(f)(1)'';

■ g. Removing the entry ''63.6(f)(2) and (3)'';

■ h. Adding, in numerical order, the entries ''63.6(f)(2)'' and ''63.6(f)(3)'';

■ i. Removing the entry ''63.6(h)(1) and 63.6(h)(2)'';

■ j. Adding, in numerical order, the entries ''63.6(h)(1)'' and ''63.6(h)(2)'';

■ k. Revising the entry ''63.7(b)'';

■ l. Revising the entry ''63.7(e)(1)'';

■ m. Removing the entry ''63.8(a)'';

■ n. Adding, in numerical order, the entries ''63.8(a)(1) and (2),'' ''63.8(a)(3)'' and ''63.8(a)(4)'';

■ o. Revising the entry ''63.8(c)(1)'';

■ p. Adding, in numerical order, the entries ''63.8(c)(1)(i)'' and ''63.8(c)(1)(iii)'';

■ q. Revising the entries ''63.8(c)(4)'' and ''63.8(c)(5)–63.8(c)(8)'';

■ r. Revising the entries ''63.8(d)'' and ''63.8(e)'';

■ s. Revising the entry ''63.8(g)'';

■ t. Revising the entries ''63.10(b)(2)(i)'' and ''63.10(b)(2)(ii)'';

■ u. Revising the entries ''63.10(b)(2)(iv)'' and ''63.10(b)(2)(v)'';

■ v. Revising the entry ''63.10(b)(2)(vii)'';

■ w. Removing the entry ''63.10(c)(9)–63.10(c)(15)'';

■ x. Adding, in numerical order, the entries ''63.10(c)(9),'' ''63.10(c)(10)–63.10(c)(11)'', and ''63.10(c)(12)–63.10(c)(15)'';

■ y. Removing the entries ''63.10(d)(5)(i)'' and ''63.10(d)(5)(ii)'';

■ z. Adding, in numerical order, the entry ''63.10(d)(5)'';

■ aa. Removing the entry ''63.11–63.16'';

■ bb. Adding, in numerical order, the entries ''63.11'' and ''63.12–63.16'';

■ cc. Removing footnote b.

The revisions and additions read as follows:

TABLE 6—GENERAL PROVISIONS APPLICABILITY TO SUBPART CC [a]

Reference	Applies to subpart CC	Comment
* *		* * * * *
63.5(d)(1)(ii)	Yes	Except that for affected sources subject to subpart CC, emission estimates specified in § 63.5(d)(1)(ii)(H) are not required, and § 63.5(d)(1)(ii)(G) and (I) are Reserved and do not apply.
* *		* * * * *
63.5(f)	Yes	Except that the cross-reference in § 63.5(f)(2) to § 63.9(b)(2) does not apply.
* *		* * * * *
63.6(e)(1)(i) and (ii)	No	See § 63.642(n) for general duty requirement.
63.6(e)(1)(iii)	Yes.	
* *		* * * * *
63.6(e)(3)(i)	No.	
* *		* * * * *
63.6(e)(3)(iii)–63.6(e)(3)(ix)	No.	
63.6(f)(1)	No.	
63.6(f)(2)	Yes	Except the phrase ''as specified in § 63.7(c)'' in § 63.6(f)(2)(iii)(D) does not apply because subpart CC does not require a site-specific test plan.
63.6(f)(3)	Yes	Except the cross-references to § 63.6(f)(1) and § 63.6(e)(1)(i) are changed to § 63.642(n).
* *		* * * * *
63.6(h)(1)	No.	

TABLE 6—GENERAL PROVISIONS APPLICABILITY TO SUBPART CC [a]—Continued

Reference	Applies to subpart CC	Comment
63.6(h)(2)	Yes	Except § 63.6(h)(2)(ii), which is reserved.
* *		* * * * *
63.7(b)	Yes	Except subpart CC requires notification of performance test at least 30 days (rather than 60 days) prior to the performance test.
* *		* * * * *
63.7(e)(1)	No	See § 63.642(d)(3).
* *		* * * * *
63.8(a)(1) and (2)	Yes.	
63.8(a)(3)	No	Reserved.
63.8(a)(4)	Yes	Except that for a flare complying with § 63.670, the cross-reference to § 63.11 in this paragraph does not include § 63.11(b).
* *		* * * * *
63.8(c)(1)	Yes	Except § 63.8(c)(1)(i) and § 63.8(c)(iii).
63.8(c)(1)(i)	No	See § 63.642(n).
63.8(c)(1)(iii)	No.	
* *		* * * * *
63.8(c)(4)	Yes	Except that for sources other than flares, subpart CC specifies the monitoring cycle frequency specified in § 63.8(c)(4)(ii) is ''once every hour'' rather than ''for each successive 15-minute period.''
63.8(c)(5)–63.8(c)(8)	No	Subpart CC specifies continuous monitoring system requirements.
63.8(d)	No	Subpart CC specifies quality control procedures for continuous monitoring systems.
63.8(e)	Yes.	
* *		* * * * *
63.8(g)	No	Subpart CC specifies data reduction procedures in §§ 63.655(i)(3) and 63.671(d).
* *		* * * * *
63.10(b)(2)(i)	No.	
63.10(b)(2)(ii)	No	See § 63.655(i)(11) for recordkeeping of (1) date, time and duration; (2) listing of affected source or equipment, and an estimate of the volume of each regulated pollutant emitted over the standard; and (3) actions to minimize emissions and correct the failure.
* *		* * * * *
63.10(b)(2)(iv)	No.	
63.10(b)(2)(v)	No.	
* *		* * * * *
63.10(b)(2)(vii)	No	§ 63.655(i) of subpart CC specifies records to be kept for parameters measured with continuous monitors.
* *		* * * * *
63.10(c)(9)	No	Reserved.
63.10(c)(10)–63.10(c)(11)	No	See § 63.655(i)(11) for malfunctions recordkeeping requirements.
63.10(c)(12)–63.10(c)(15)	No.	
* *		* * * * *
63.10(d)(5)	No	See § 63.655(g)(12) for malfunctions reporting requirements.
* *		* * * * *
63.11	Yes	Except that flares complying with § 63.670 are not subject to the requirements of § 63.11(b).
63.12–63.16	Yes.	

[a] Wherever subpart A specifies ''postmark'' dates, submittals may be sent by methods other than the U.S. Mail (e.g., by fax or courier). Submittals shall be sent by the specified dates, but a postmark is not required.

■ 35. Table 10 to Subpart CC is amended by:

■ a. Redesignating the entry ''Flare'' as ''Flare (if meeting the requirements of 63.643 and 63.644)'';

■ b. Adding the entry ''Flare (if meeting the requirements of 63.670 and 63.671)'' after the newly redesignated entry ''Flare (if meeting the requirements of 63.643 and 63.644)'';

■ c. Revising the entry ''All control devices''; and

■ d. Revising footnote i.

The revisions and additions read as follows:

TABLE 10—MISCELLANEOUS PROCESS VENTS—MONITORING, RECORDKEEPING AND REPORTING REQUIREMENTS FOR COMPLYING WITH 98 WEIGHT-PERCENT REDUCTION OF TOTAL ORGANIC HAP EMISSIONS OR A LIMIT OF 20 PARTS PER MILLION BY VOLUME

Control device	Parameters to be monitored [a]	Recordkeeping and reporting requirements for monitored parameters
* *	* *	* * *
Flare (if meeting the requirements of 63.670 and 63.671).	The parameters specified in 63.670	1. Records as specified in 63.655(i)(9).
		2. Report information as specified in 63.655(g)(11)—PR [g].
All control devices	Volume of the gas stream diverted to the atmosphere from the control device (63.644(c)(1)) *or*	1. Continuous records [c].
		2. Record and report the times and durations of all periods when the vent stream is diverted through a bypass line or the monitor is not operating—PR [g].
	Monthly inspections of sealed valves (63.644(c)(2)).	1. Records that monthly inspections were performed.
		2. Record and report all monthly inspections that show the valves are not closed or the seal has been changed—PR [g].

[a] Regulatory citations are listed in parentheses.
[c] "Continuous records" is defined in § 63.641.
[g] PR = Periodic Reports described in § 63.655(g).
[i] Process vents that are routed to refinery fuel gas systems are not regulated under this subpart provided that on and after [THE DATE 3 YEARS AFTER THE DATE OF PUBLICATION OF THE FINAL RULE AMENDMENTS IN THE **FEDERAL REGISTER**], any flares receiving gas from that fuel gas system are in compliance with § 63.670. No monitoring, recordkeeping, or reporting is required for boilers and process heaters that combust refinery fuel gas.

■ 36. Table 11 is added to Subpart CC to read as follows:

TABLE 11—COMPLIANCE DATES AND REQUIREMENTS

If the construction/reconstruction date [a] is . . .	Then the owner or operator must comply with . . .	And the owner or operator must achieve compliance . . .	Except as provided in . . .
(1) After June 30, 2014	(i) Requirements for new sources in §§ 63.640 through 63.642, § 63.647, §§ 63.650 through 63.653, and §§ 63.656 through 63.660.	(a) Upon initial startup or [THE DATE OF PUBLICATION OF THE FINAL RULE AMENDMENTS IN THE **FEDERAL REGISTER**], whichever is later.	(*1*) § 63.640(k), (l) and (m).
	(ii) The new source requirements in § 63.654 for heat exchange systems.	(a) Upon initial startup or October 28, 2009, whichever is later.	(*1*) § 63.640(k), (l) and (m).
(2) After September 4, 2007 but on or before June 30, 2014.	(i) Requirements for new sources in §§ 63.640 through 63.653 and 63.656 [b c].	(a) Upon initial startup	(*1*) § 63.640(k), (l) and (m).
	(ii) Requirements for new sources in §§ 63.640 through 63.645, §§ 63.647 through 63.653, and §§ 63.656, through 63.658 [b].	(a) On or before [THE DATE 3 YEARS AFTER THE DATE OF PUBLICATION OF THE FINAL RULE AMENDMENTS IN THE **FEDERAL REGISTER**].	(*1*) § 63.640(k), (l) and (m).
	(iii) Requirements for new sources in § 63.660 [c].	(a) On or before [THE DATE 90 DAYS AFTER THE DATE OF PUBLICATION OF THE FINAL RULE AMENDMENTS IN THE **FEDERAL REGISTER**].	(*1*) § 63.640(k), (l) and (m).
	(iv) The new source requirements in § 63.654 for heat exchange systems.	(a) Upon initial startup or October 28, 2009, whichever is later.	(*1*) § 63.640(k), (l) and (m).
(3) After July 14, 1994 but on or before September 4, 2007.	(i) Requirements for new sources in §§ 63.640 through 63.653 and 63.656 [d e].	(a) Upon initial startup or August 18, 1995, whichever is later.	(*1*) § 63.640(k), (l) and (m).
	(ii) Requirements for new sources in §§ 63.640 through 63.645, §§ 63.647 through 63.653, and §§ 63.656, through 63.658 [d].	(a) On or before [THE DATE 3 YEARS AFTER THE DATE OF PUBLICATION OF THE FINAL RULE AMENDMENTS IN THE **FEDERAL REGISTER**].	(*1*) § 63.640(k), (l) and (m).
	(iii) Requirements for new sources in § 63.660 [e].	(a) On or before [THE DATE 90 DAYS AFTER THE DATE OF PUBLICATION OF THE FINAL RULE AMENDMENTS IN THE **FEDERAL REGISTER**].	(*1*) § 63.640(k), (l) and (m).

TABLE 11—COMPLIANCE DATES AND REQUIREMENTS—Continued

If the construction/reconstruction date [a] is . . .	Then the owner or operator must comply with . . .	And the owner or operator must achieve compliance . . .	Except as provided in . . .
	(iv) The existing source requirements in § 63.654 for heat exchange systems.	(a) On or before October 29, 2012	(*1*) § 63.640(k), (l) and (m).
(4) On or before July 14, 1994.	(i) Requirements for existing sources in §§ 63.640 through 63.653 and 63.656 [f g].	(a) On or before August 18, 1998	(*1*) § 63.640(k), (l) and (m) (*2*) § 63.6(c)(5) of subpart A of this part or unless an extension has been granted by the Administrator as provided in § 63.6(i) of subpart A of this part.
	(ii) Requirements for existing sources in §§ 63.640 through 63.645, §§ 63.647 through 63.653, and §§ 63.656 through 63.658 [f].	(a) On or before [THE DATE 3 YEARS AFTER THE DATE OF PUBLICATION OF THE FINAL RULE AMENDMENTS IN THE **FEDERAL REGISTER**].	(*1*) § 63.640(k), (l) and (m).
	(iii) Requirements for existing sources in § 63.660 [g].	(a) On or before [THE DATE 90 DAYS AFTER THE DATE OF PUBLICATION OF THE FINAL RULE AMENDMENTS IN THE **FEDERAL REGISTER**].	(*1*) § 63.640(k), (l) and (m).
	(iii) The existing source requirements in § 63.654 for heat exchange systems.	(a) On or before October 29, 2012	(*1*) § 63.640(k), (l) and (m).

[a] For purposes of this table, the construction/reconstruction date means the date of construction or reconstruction of an entire affected source or the date of a process unit addition or change meeting the criteria in § 63.640(i) or (j). If a process unit addition or change does not meet the criteria in § 63.640(i) or (j), the process unit shall comply with the applicable requirements for existing sources.

[b] Between the compliance dates in items (2)(i)(a) and (2)(ii)(a) of this table, the owner or operator may elect to comply with either the requirements in item (2)(i) or item (2)(ii) of this table. The requirements in item (2)(i) of this table no longer apply after demonstrated compliance with the requirements in item (2)(ii) of this table.

[c] Between the compliance dates in items (2)(i)(a) and (2)(iii)(a) of this table, the owner or operator may elect to comply with either the requirements in item (2)(i) or item (2)(iii) of this table. The requirements in item (2)(i) of this table no longer apply after demonstrated compliance with the requirements in item (2)(iii) of this table.

[d] Between the compliance dates in items (3)(i)(a) and (3)(ii)(a) of this table, the owner or operator may elect to comply with either the requirements in item (3)(i) or item (3)(ii) of this table. The requirements in item (3)(i) of this table no longer apply after demonstrated compliance with the requirements in item (3)(ii) of this table.

[e] Between the compliance dates in items (3)(i)(a) and (3)(iii)(a) of this table, the owner or operator may elect to comply with either the requirements in item (3)(i) or item (3)(iii) of this table. The requirements in item (3)(i) of this table no longer apply after demonstrated compliance with the requirements in item (3)(iii) of this table.

[f] Between the compliance dates in items (4)(i)(a) and (4)(ii)(a) of this table, the owner or operator may elect to comply with either the requirements in item (4)(i) or item (4)(ii) of this table. The requirements in item (4)(i) of this table no longer apply after demonstrated compliance with the requirements in item (4)(ii) of this table.

[g] Between the compliance dates in items (4)(i)(a) and (4)(iii)(a) of this table, the owner or operator may elect to comply with either the requirements in item (4)(i) or item (4)(iii) of this table. The requirements in item (4)(i) of this table no longer apply after demonstrated compliance with the requirements in item (4)(iii) of this table.

■ 37. Table 12 is added to Subpart CC to read as follows:

TABLE 12—INDIVIDUAL COMPONENT PROPERTIES

Component	Molecular formula	MW_i (pounds per pound-mole)	CMN_i (mole per mole)	NHV_i (British thermal units per standard cubic foot)	LFL_i (volume %)
Acetylene	C_2H_2	26.04	2	1,404	2.5
Benzene	C_6H_6	78.11	6	3,591	1.3
1,2-Butadiene	C_4H_6	54.09	4	2,794	2.0
1,3-Butadiene	C_4H_6	54.09	4	2,690	2.0
iso-Butane	C_4H_{10}	58.12	4	2,957	1.8
n-Butane	C_4H_{10}	58.12	4	2,968	1.8
cis-Butene	C_4H_8	56.11	4	2,830	1.6
iso-Butene	C_4H_8	56.11	4	2,928	1.8
trans-Butene	C_4H_8	56.11	4	2,826	1.7
Carbon Dioxide	CO_2	44.01	1	0	∞
Carbon Monoxide	CO	28.01	1	316	12.5
Cyclopropane	C_3H_6	42.08	3	2,185	2.4
Ethane	C_2H_6	30.07	2	1,595	3.0
Ethylene	C_2H_4	28.05	2	1,477	2.7
Hydrogen	H_2	2.02	0	274	4.0
Methane	CH_4	16.04	1	896	5.0

TABLE 12—INDIVIDUAL COMPONENT PROPERTIES—Continued

Component	Molecular formula	MW_i (pounds per pound-mole)	CMN_i (mole per mole)	NHV_i (British thermal units per standard cubic foot)	LFL_i (volume %)
Methyl-Acetylene	C_3H_4	40.06	3	2,088	1.7
Nitrogen	N_2	28.01	0	0	∞
Oxygen	O_2	32.00	0	0	∞
Pentane+ (C5+)	C_5H_{12}	72.15	5	3,655	1.4
Propadiene	C_3H_4	40.06	3	2,066	2.16
Propane	C_3H_8	44.10	3	2,281	2.1
Propylene	C_3H_6	42.08	3	2,150	2.4
Water	H_2O	18.02	0	0	∞

■ 38. Table 13 is added to Subpart CC to read as follows:

TABLE 13—CALIBRATION AND QUALITY CONTROL REQUIREMENTS FOR CPMS

Parameter	Accuracy requirements	Calibration requirements
Temperature	±1 percent over the normal range of temperature measured or 2.8 degrees Celsius (5 degrees Fahrenheit), whichever is greater, for non-cryogenic temperature ranges.	Performance evaluation annually and following any period of more than 24 hours throughout which the temperature exceeded the maximum rated temperature of the sensor, or the data recorder was off scale. Visual inspections and checks of CPMS operation every 3 months, unless the CPMS has a redundant temperature sensor.
	±2.5 percent over the normal range of temperature measured or 2.8 degrees Celsius (5 degrees Fahrenheit), whichever is greater, for cryogenic temperature ranges.	Select a representative measurement location.
Flow Rate	±5 percent over the normal range of flow measured or 1.9 liters per minute (0.5 gallons per minute), whichever is greater, for liquid flow rate.	Performance evaluation annually and following any period of more than 24 hours throughout which the flow rate exceeded the maximum rated flow rate of the sensor, or the data recorder was off scale. Checks of all mechanical connections for leakage monthly. Visual inspections and checks of CPMS operation every 3 months, unless the CPMS has a redundant flow sensor.
	±5 percent over the normal range of flow measured or 280 liters per minute (10 cubic feet per minute), whichever is greater, for gas flow rate.	Select a representative measurement location where swirling flow or abnormal velocity distributions due to upstream and downstream disturbances at the point of measurement are minimized.
	±5 percent over the normal range measured for mass flow rate.	
Pressure	±5 percent over the normal range measured or 0.12 kilopascals (0.5 inches of water column), whichever is greater.	Checks for obstructions at least once each process operating day (e.g., pressure tap pluggage).
		Performance evaluation annually and following any period of more than 24 hours throughout which the pressure exceeded the maximum rated pressure of the sensor, or the data recorder was off scale. Checks of all mechanical connections for leakage monthly. Visual inspection of all components for integrity, oxidation and galvanic corrosion every 3 months, unless the CPMS has a redundant pressure sensor.
		Select a representative measurement location that minimizes or eliminates pulsating pressure, vibration, and internal and external corrosion.
Net Heating Value by Calorimeter.	±2 percent of span	Specify calibration requirements in your site specific CPMS monitoring plan. Calibration requirements should follow manufacturer's recommendations at a minimum.
		Temperature control (heated and/or cooled as necessary) the sampling system to ensure proper year-round operation.
		Where feasible, select a sampling location at least two equivalent diameters downstream from and 0.5 equivalent diameters upstream from the nearest disturbance. Select the sampling location at least two equivalent duct diameters from the nearest control device, point of pollutant generation, air in-leakages, or other point at which a change in the pollutant concentration or emission rate occurs.
Net Heating Value by Gas Chromatograph.	As specified in Performance Specification 9 of 40 CFR part 60, Appendix B.	Follow the procedure in Performance Specification 9 of 40 CFR part 60, Appendix B

TABLE 13—CALIBRATION AND QUALITY CONTROL REQUIREMENTS FOR CPMS—Continued

Parameter	Accuracy requirements	Calibration requirements
Net Heating Value by Total Hydrocarbon Monitor.	Calibration drift ≤3% of instrument span at each level.	Calibration drift check daily. Follow the procedure in Sections 4.1 and 4.2 of Procedure 1 in 40 CFR part 60, Appendix F.
	Cylinder Gas Audit Accuracy ≤5% of instrument span at each level.	Cylinder gas audit quarterly. Follow the procedure in Section 5.1.2 of Procedure 1 in 40 CFR part 60, Appendix F, except the audit shall be performed every quarter. For both the calibration drift and error tests, the calibration gases should be injected into the sampling system as close to the sampling probe outlet as practical and must pass through all filters, scrubbers, conditioners, and other monitor components used during normal sampling. Select a measurement location that meets the requirements of Section 3.1 of Performance Specification 8A of Appendix B to 40 CFR part 60.

Subpart UUU—[Amended]

■ 39. Section 63.1562 is amended by:
■ (a) Revising paragraph (b)(3) and
■ (b) Revising paragraph (f)(5).
The revisions read as follows:

§ 63.1562 What parts of my plant are covered by this subpart?

* * * * *

(b) * * *

(3) The process vent or group of process vents on Claus or other types of sulfur recovery plant units or the tail gas treatment units serving sulfur recovery plants that are associated with sulfur recovery.

* * * * *

(f) * * *

(5) Gaseous streams routed to a fuel gas system, provided that on and after [THE DATE 3 YEARS AFTER THE DATE OF PUBLICATION OF THE FINAL RULE AMENDMENTS IN THE **FEDERAL REGISTER**], any flares receiving gas from the fuel gas system are in compliance with § 63.670.

■ 40. Section 63.1564 is amended by:
■ a. Revising paragraph (a)(1) introductory text;
■ b. Revising paragraph (a)(1)(i);
■ c. Revising paragraph (a)(1)(ii);
■ d. Revising paragraph (a)(1)(iv);
■ e. Adding paragraph (a)(5);
■ f. Revising paragraph (b)(4)(i);
■ g. Revising paragraph (b)(4)(ii);
■ h. Revising paragraph (b)(4)(iv);
■ i. Adding paragraph (c)(5).
The revisions and additions read as follows:

§ 63.1564 What are my requirements for metal HAP emissions from catalytic cracking units?

(a) * * *

(1) Meet each emission limitation in Table 1 of this subpart that applies to you. If your catalytic cracking unit is subject to the NSPS for PM in § 60.102 or is subject to § 60.102a(b)(1) of this chapter, you must meet the emission limitations for NSPS units. If your catalytic cracking unit is not subject to the NSPS for PM, you can choose from the four options in paragraphs (a)(1)(i) through (iv) of this section:

(i) You can elect to comply with the PM per coke burn-off emission limit (Option 1);

(ii) You can elect to comply with the PM concentration emission limit (Option 2);

* * * * *

(iv) You can elect to comply with the Ni per coke burn-off emission limit (Option 4).

* * * * *

(5) During periods of startup only, if your catalytic cracking unit is followed by an electrostatic precipitator, you can choose from the two options in paragraphs (a)(5)(i) and (ii) of this section:

(i) You can elect to comply with the requirements paragraphs (a)(1) and (2) of this section; or

(ii) You can elect to maintain the opacity in the exhaust gas from your catalyst regenerator at or below 30 percent opacity on a 6-minute average basis.

(b) * * *

(4) * * *

(i) If you elect Option 1 in paragraph (a)(1)(i) of this section, compute the PM emission rate (lb/1,000 lb of coke burn-off) for each run using Equations 1, 2, and 3 (if applicable) of this section and the site-specific opacity limit, if applicable, using Equation 4 of this section as follows:

$$R_c = K_1 Q_r \left(\%CO_2 + \%CO\right) + K_2 Q_a - K_3 Q_r \left[\left(\frac{\%CO}{2}\right) + \%CO_2 + \%O_2\right] + K_3 Q_{oxy}\left(\%O_{xy}\right) \quad \text{(Eq. 1)}$$

Where:

R_c = Coke burn-off rate, kg/hr (lb/hr);

Q_r = Volumetric flow rate of exhaust gas from catalyst regenerator before adding air or gas streams. Example: You may measure upstream or downstream of an electrostatic precipitator, but you must measure upstream of a carbon monoxide boiler, dscm/min (dscf/min). You may use the alternative in either § 63.1573(a)(1) or (a)(2), as applicable, to calculate Q_r;

Q_a = Volumetric flow rate of air to catalytic cracking unit catalyst regenerator, as determined from instruments in the catalytic cracking unit control room, dscm/min (dscf/min);

$\%CO_2$ = Carbon dioxide concentration in regenerator exhaust, percent by volume (dry basis);

%CO = Carbon monoxide concentration in regenerator exhaust, percent by volume (dry basis);

$\%O_2$ = Oxygen concentration in regenerator exhaust, percent by volume (dry basis);

K_1 = Material balance and conversion factor, 0.2982 (kg-min)/(hr-dscm-%) (0.0186 (lb-min)/(hr-dscf-%));

K_2 = Material balance and conversion factor, 2.088 (kg-min)/(hr-dscm) (0.1303 (lb-min)/(hr-dscf));

K_3 = Material balance and conversion factor, 0.0994 (kg-min)/(hr-dscm-%) (0.0062 (lb-min)/(hr-dscf-%));

Q_{oxy} = Volumetric flow rate of oxygen-enriched air stream to regenerator, as determined from instruments in the catalytic cracking unit control room, dscm/min (dscf/min); and

$\%O_{xy}$ = Oxygen concentration in oxygen-enriched air stream, percent by volume (dry basis).

$$E = \frac{K \times C_s \times Q_{sd}}{R_c} \qquad \text{(Eq. 2)}$$

Where:

E = Emission rate of PM, kg/1,000 kg (lb/1,000 lb) of coke burn-off;

C_s = Concentration of PM, g/dscm (lb/dscf);

Q_{sd} = Volumetric flow rate of the catalytic cracking unit catalyst regenerator flue gas as measured by Method 2 in appendix A to part 60 of this chapter, dscm/hr (dscf/hr);

R_c = Coke burn-off rate, kg coke/hr (1,000 lb coke/hr); and

K = Conversion factor, 1.0 (kg^2/g)/(1,000 kg) (1,000 lb/(1,000 lb)).

$$E_s = 1.0 + A\left(\frac{H}{R_c}\right)K' \qquad \text{(Eq. 3)}$$

Where:

E_s = Emission rate of PM allowed, kg/1,000 kg (1b/1,000 lb) of coke burn-off in catalyst regenerator;

1.0 = Emission limitation, kg coke/1,000 kg (lb coke/1,000 lb);

A = Allowable incremental rate of PM emissions. Before [THE DATE 18 MONTHS AFTER THE DATE OF PUBLICATION OF THE FINAL RULE AMENDMENTS IN THE **FEDERAL REGISTER**], A=0.18 g/million cal (0.10 lb/million Btu). On or after [THE DATE 18 MONTHS AFTER THE DATE OF PUBLICATION OF THE FINAL RULE AMENDMENTS IN THE **FEDERAL REGISTER**], A=0 g/million cal (0 lb/million Btu);

H = Heat input rate from solid or liquid fossil fuel, million cal/hr (million Btu/hr). Make sure your permitting authority approves procedures for determining the heat input rate;

R_c = Coke burn-off rate, kg coke/hr (1,000 lb coke/hr) determined using Equation 1 of this section; and

K′ = Conversion factor to units to standard, 1.0 (kg^2/g)/(1,000 kg) (10^3 lb/(1,000 lb)).

$$Opacity\ Limit = Opacity_{st} \times \left(\frac{1\,\text{lb} / 1000\ \text{lb coke burn}}{PMEmR_{st}}\right) \qquad \text{(Eq. 4)}$$

Where:

Opacity Limit = Maximum permissible hourly average opacity, percent, or 10 percent, whichever is greater;

$Opacity_{st}$ = Hourly average opacity measured during the source test, percent; and

$PMEmR_{st}$ = PM emission rate measured during the source test, lb/1,000 lb coke burn.

(ii) If you elect Option 2 in paragraph (a)(1)(ii) of this section, the PM concentration emission limit, determine the average PM concentration from the initial performance test used to certify your PM CEMS.

* * * * *

(iv) If you elect Option 4 in paragraph (a)(1)(iv) of this section, the Ni per coke burn-off emission limit, compute your Ni emission rate using Equations 1 and 8 of this section and your site-specific Ni operating limit (if you use a continuous opacity monitoring system) using Equations 9 and 10 of this section as follows:

$$E_{Ni_2} = \frac{C_{Ni} \times Q_{sd}}{R_c} \qquad \text{(Eq. 8)}$$

Where:

E_{Ni2} = Normalized mass emission rate of Ni, mg/kg coke (lb/1,000 lb coke).

$$Opacity_2 = \frac{1.0\,\text{mg/kgcoke}}{NiEmR2_{st}} \times Opacity_{st} \qquad \text{(Eq. 9)}$$

Where:

$Opacity_2$ = Opacity value for use in Equation 10 of this section, percent, or 10 percent, whichever is greater; and

$NiEmR2_{st}$ = Average Ni emission rate calculated as the arithmetic average Ni emission rate using Equation 8 of this section for each of the performance test runs, mg/kg coke.

$$Ni\ Operating\ Limit_2 = Opacity_2 \times E\text{-}Cat_{st} \times \frac{Q_{mon,st}}{R_{c,st}} \qquad \text{(Eq. 10)}$$

Where:

Ni Operating $Limit_2$ = Maximum permissible hourly average Ni operating limit, percent-ppmw-acfm-hr/kg coke, i.e., your site-specific Ni operating limit; and

$R_{c,st}$ = Coke burn rate from Equation 1 of this section, as measured during the initial performance test, kg coke/hr.

* * * * *

(c) * * *

(5) During periods of startup only, if you elect to comply with the alternative limit in paragraph (a)(5)(ii) of this section, determine continuous compliance by: collecting opacity readings using either a continuous opacity monitoring system according to § 63.1572 or manual opacity observations following EPA Method 9 in Appendix A–4 to part 60 of this chapter; and maintaining each 6-minute average opacity at or below 30 percent.

■ 41. Section 63.1565 is amended by:

■ a. Adding paragraph (a)(5);

■ b. Adding paragraph (b)(1)(iv); and

■ c. Adding paragraph (c)(3).

The additions read as follows:

§ 63.1565 What are my requirements for organic HAP emissions from catalytic cracking units?

(a) * * *

(5) During periods of startup only, if your catalytic cracking unit is not followed by a CO boiler, thermal oxidizer, incinerator, flare or similar combustion device, you can choose from the two options in paragraphs (a)(5)(i) and (ii) of this section:

(i) You can elect to comply with the requirements in paragraphs (a)(1) and (2) of this section; or

(ii) You can elect to maintain the oxygen (O_2) concentration in the exhaust gas from your catalyst regenerator at or above 1 volume percent (dry basis).

(b) * * *

(1) * * *

(iv) If you elect to comply with the alternative limit for periods of startup in paragraph (a)(5)(ii) of this section, you must also install, operate, and maintain a continuous parameter monitoring system to measure and record the oxygen content (percent, dry basis) in the catalyst regenerator vent.

* * * * *

(c) * * *

(3) Demonstrate continuous compliance with the alternative limit in paragraph (a)(5)(ii) of this section by collecting the hourly average oxygen concentration monitoring data according to § 63.1572 and maintaining the hourly average oxygen concentration at or above 1 volume percent (dry basis).

■ 42. Section 63.1566 is amended by:

■ a. Revising paragraph (a)(1) introductory text;

■ b. Revising paragraph (a)(1)(i); and

■ c. Revising paragraph (a)(4).

The revisions read as follows:

§ 63.1566 What are my requirements for organic HAP emissions from catalytic reforming units?

(a) * * *

(1) Meet each emission limitation in Table 15 of this subpart that applies to you. You can choose from the two options in paragraphs (a)(1)(i) and (ii) of this section.

(i) You can elect to vent emissions of total organic compounds (TOC) to a flare (Option 1). On and after [THE DATE 3 YEARS AFTER THE DATE OF PUBLICATION OF THE FINAL RULE AMENDMENTS IN THE **FEDERAL REGISTER**], the flare must meet the requirements of § 63.670. Prior to [THE DATE 3 YEARS AFTER THE DATE OF PUBLICATION OF THE FINAL RULE AMENDMENTS IN THE **FEDERAL REGISTER**], the flare must meet the control device requirements in § 63.11(b) or the requirements of § 63.670.

* * * * *

(4) The emission limitations in Tables 15 and 16 of this subpart do not apply to emissions from process vents during passive depressuring when the reactor vent pressure is 5 pounds per square inch gauge (psig) or less. The emission limitations in Tables 15 and 16 of this subpart do apply to emissions from process vents during active purging operations (when nitrogen or other purge gas is actively introduced to the reactor vessel) or active depressuring (using a vacuum pump, ejector system, or similar device) regardless of the reactor vent pressure.

* * * * *

■ 43. Section 63.1568 is amended by:

■ a. Revising paragraph (a)(1) introductory text;

■ b. Revising paragraph (a)(1)(i);

■ c. Adding paragraph (a)(4);

■ d. Revising paragraph (b)(1); and

■ e. Adding paragraphs (c)(3) and (4).

The revisions and additions read as follows:

§ 63.1568 What are my requirements for HAP emissions from sulfur recovery units?

(a) * * *

(1) Meet each emission limitation in Table 29 of this subpart that applies to you. If your sulfur recovery unit is subject to the NSPS for sulfur oxides in § 60.104 or in § 60.102a(f)(1) of this chapter, you must meet the emission limitations for NSPS units. If your sulfur recovery unit is not subject to one of these NSPS for sulfur oxides, you can choose from the options in paragraphs (a)(1)(i) through (ii) of this section:

(i) You can elect to meet the NSPS requirements in § 60.104(a)(2) or in § 60.102a(f)(1) of this chapter (Option 1); or

* * * * *

(4) During periods of shutdown only, you can choose from the three options in paragraphs (a)(4)(i) through (iii) of this section.

(i) You can elect to comply with the requirements in paragraphs (a)(1) and (2) of this section.

(ii) You can elect to send any shutdown purge gases to a flare. On and after [THE DATE 3 YEARS AFTER THE DATE OF PUBLICATION OF THE FINAL RULE AMENDMENTS IN THE **FEDERAL REGISTER**], the flare must meet the requirements of § 63.670. Prior to [THE DATE 3 YEARS AFTER THE DATE OF PUBLICATION OF THE FINAL RULE AMENDMENTS IN THE **FEDERAL REGISTER**], the flare must meet the design and operating requirements in § 63.11(b) or the requirements of § 63.670.

(iii) You can elect to send any shutdown purge gases to a to a thermal oxidizer or incinerator operated at a minimum hourly average temperature of 1,200 degrees Fahrenheit and a minimum hourly average outlet oxygen (O_2) concentration of 2 volume percent (dry basis).

(b) * * *

(1) Install, operate, and maintain a continuous monitoring system according to the requirements in § 63.1572 and Table 31 of this subpart. Except:

(i) If you elect to comply with the alternative limit for periods of shutdown in paragraph (a)(4)(ii) of this section, then on and after [THE DATE 3 YEARS AFTER THE DATE OF PUBLICATION OF THE FINAL RULE AMENDMENTS IN THE **FEDERAL REGISTER**], you must also install, operate, calibrate, and maintain monitoring systems as specified in §§ 63.670 and 63.671. Prior to [THE DATE 3 YEARS AFTER THE DATE OF PUBLICATION OF THE FINAL RULE AMENDMENTS IN THE **FEDERAL REGISTER**], you must either install, operate, and maintain continuous parameter monitoring systems following the requirements in § 63.11 (to detect the presence of a flame; to measure and record the net heating value of the gas being combusted; and to measure and record the volumetric flow of the gas being combusted) or install, operate, calibrate, and maintain monitoring systems as specified in §§ 63.670 and 63.671.

(ii) If you elect to comply with the alternative limit for periods of

shutdown in paragraph (a)(4)(iii) of this section, you must also install, operate, and maintain continuous parameter monitoring system to measure and record the temperature and oxygen content (percent, dry basis) in the vent from the thermal oxidizer or incinerator.

* * * * *

(c) * * *

(3) Demonstrate continuous compliance with the alternative limit in paragraph (a)(4)(ii) of this section by meeting the requirements of either paragraph (c)(3)(i) or (ii) of this section.

(i) On and after [THE DATE 3 YEARS AFTER THE DATE OF PUBLICATION OF THE FINAL RULE AMENDMENTS IN THE **FEDERAL REGISTER**], you must meet the requirements of paragraphs (c)(3)(i)(A) through (C) of this section.

(A) Collect the flare monitoring data according to §§ 63.670 and 63.671.

(B) Keep the records specified in § 63.655(i)(9).

(C) Maintain the selected operating parameters as specified in § 63.670.

(ii) Prior to [THE DATE 3 YEARS AFTER THE DATE OF PUBLICATION OF THE FINAL RULE AMENDMENTS IN THE **FEDERAL REGISTER**], you must either meet the requirements of paragraph (c)(3)(i) of this section or meet the requirements of paragraphs (c)(3)(ii)(A) through (D) of this section.

(A) Collect the flare monitoring data according to § 63.1572.

(B) Record for each 1-hour period whether the monitor was continuously operating and the pilot light was continuously present during each 1-hour period.

(C) Maintain the net heating value of the gas being combusted at or above the applicable limits in § 63.11.

(D) Maintain the exit velocity at or below the applicable maximum exit velocity specified in § 63.11.

(4) Demonstrate continuous compliance with the alternative limit in paragraph (a)(4)(iii) of this section by collecting the hourly average temperature and oxygen concentration monitoring data according to § 63.1572; maintaining the hourly average temperature at or above 1,200 degrees Fahrenheit; and maintaining the hourly average oxygen concentration at or above 2 volume percent (dry basis).

■ 44. Section 63.1570 is amended by:

■ a. Revising paragraphs (a) through (d); and

■ b. Removing and reserving paragraph (g).

The revisions read as follows:

§ 63.1570 What are my general requirements for complying with this subpart?

(a) You must be in compliance with all of the non-opacity standards in this subpart at all times.

(b) You must be in compliance with the opacity and visible emission limits in this subpart at all times.

(c) At all times, you must operate and maintain any affected source, including associated air pollution control equipment and monitoring equipment, in a manner consistent with safety and good air pollution control practices for minimizing emissions. The general duty to minimize emissions does not require you to make any further efforts to reduce emissions if levels required by the applicable standard have been achieved. Determination of whether a source is operating in compliance with operation and maintenance requirements will be based on information available to the Administrator which may include, but is not limited to, monitoring results, review of operation and maintenance procedures, review of operation and maintenance records, and inspection of the source.

(d) During the period between the compliance date specified for your affected source and the date upon which continuous monitoring systems have been installed and validated and any applicable operating limits have been set, you must maintain a log detailing the operation and maintenance of the process and emissions control equipment.

* * * * *

■ 45. Section 63.1571 is amended by:

■ a. Adding paragraph (a)(5);

■ b. Revising paragraph (b)(1);

■ c. Removing paragraph (b)(4);

■ d. Redesignating paragraph (b)(5) as (b)(4);

■ e. Revising paragraphs (d)(2) and (d)(4).

The revisions and additions read as follows:

§ 63.1571 How and when do I conduct a performance test or other initial compliance demonstration?

(a) * * *

(5) Conduct a performance test for PM or Ni, as applicable, from catalytic cracking units at least once every 5 years for those units monitored with CPMS, BLD, or COMS. You must conduct the first periodic performance test no later than [THE DATE 18 MONTHS AFTER THE DATE OF PUBLICATION OF THE FINAL RULE AMENDMENTS IN THE **FEDERAL REGISTER**]. Those units monitoring PM concentration with a PM CEMS are not required to conduct a periodic PM performance test.

(b) * * *

(1) Conduct performance tests under such conditions as the Administrator specifies to you based on representative performance of the affected source for the period being tested. Representative conditions exclude periods of startup and shutdown unless specified by the Administrator or an applicable subpart. You may not conduct performance tests during periods of malfunction. You must record the process information that is necessary to document operating conditions during the test and include in such record an explanation to support that such conditions represent normal operation. Upon request, you must make available to the Administrator such records as may be necessary to determine the conditions of performance tests.

* * * * *

(d) * * *

(2) If you must meet the HAP metal emission limitations in § 63.1564, you elect the option in paragraph (a)(1)(iv) in § 63.1564 (Ni per coke burn-off), and you use continuous parameter monitoring systems, you must establish an operating limit for the equilibrium catalyst Ni concentration based on the laboratory analysis of the equilibrium catalyst Ni concentration from the initial performance test. Section 63.1564(b)(2) allows you to adjust the laboratory measurements of the equilibrium catalyst Ni concentration to the maximum level. You must make this adjustment using Equation 2 of this section as follows:

$$Ecat\text{-}Limit = \frac{1.0\,\text{mg/kgcokeburn-off}}{NiEmR2_{st}} \times Ecat_{st} \qquad \text{(Eq. 2)}$$

Where:

$NiEmR2_{st}$ = Average Ni emission rate calculated as the arithmetic average Ni emission rate using Equation 8 of § 63.1564 for each performance test run, mg/kg coke burn-off.

* * * * *

(4) Except as specified in paragraph (d)(3) of this section, if you use continuous parameter monitoring systems, you may adjust one of your monitored operating parameters (flow rate, total power and secondary current, pressure drop, liquid-to-gas ratio) from the average of measured values during the performance test to the maximum value (or minimum value, if applicable) representative of worst-case operating conditions, if necessary. This adjustment of measured values may be done using control device design specifications, manufacturer recommendations, or other applicable information. You must provide supporting documentation and rationale in your Notification of Compliance Status, demonstrating to the satisfaction of your permitting authority, that your affected source complies with the applicable emission limit at the operating limit based on adjusted values.

* * * * *

■ 46. Section 63.1572 is amended by:

■ a. Revising paragraphs (c) introductory text, (c)(1), (c)(3) and (c)(4); and

■ b. Revising paragraphs (d)(1) and (2).

The revisions read as follows:

§ 63.1572 What are my monitoring installation, operation, and maintenance requirements?

* * * * *

(c) Except for flare monitoring systems, you must install, operate, and maintain each continuous parameter monitoring system according to the requirements in paragraphs (c)(1) through (5) of this section. For flares, on and after [THE DATE 3 YEARS AFTER THE DATE OF PUBLICATION OF THE FINAL RULE AMENDMENTS IN THE **FEDERAL REGISTER**], you must install, operate, calibrate, and maintain monitoring systems as specified in §§ 63.670 and 63.671. Prior to [THE DATE 3 YEARS AFTER THE DATE OF PUBLICATION OF THE FINAL RULE AMENDMENTS IN THE **FEDERAL REGISTER**], you must either meet the monitoring system requirements in paragraphs (c)(1) through (5) of this section or meet the requirements in §§ 63.670 and 63.671.

(1) You must install, operate, and maintain each continuous parameter monitoring system according to the requirements in Table 41 of this subpart. You must also meet the equipment specifications in Table 41 of this subpart if pH strips or colormetric tube sampling systems are used. You must meet the requirements in Table 41 of this subpart for BLD systems.

* * * * *

(3) Each continuous parameter monitoring system must have valid hourly average data from at least 75 percent of the hours during which the process operated, except for BLD systems.

(4) Each continuous parameter monitoring system must determine and record the hourly average of all recorded readings and if applicable, the daily average of all recorded readings for each operating day, except for BLD systems. The daily average must cover a 24-hour period if operation is continuous or the number of hours of operation per day if operation is not continuous, except for BLD systems.

* * * * *

(d) * * *

(1) You must conduct all monitoring in continuous operation (or collect data at all required intervals) at all times the affected source is operating.

(2) You may not use data recorded during required quality assurance or control activities (including, as applicable, calibration checks and required zero and span adjustments) for purposes of this regulation, including data averages and calculations, for fulfilling a minimum data availability requirement, if applicable. You must use all the data collected during all other periods in assessing the operation of the control device and associated control system.

■ 47. Section 63.1573 is amended by:

■ a. Redesignating paragraphs (b), (c), (d), (e) and (f) as paragraphs (c), (d), (e), (f) and (g);

■ b. Adding paragraph (b);

■ c. Revising newly redesignated paragraph (c) introductory text;

■ d. Revising newly redesignated paragraph (d) introductory text;

■ e. Revising newly redesignated paragraph (f) introductory text; and

■ f. Revising newly redesignated paragraph (g)(1).

The revisions and additions read as follows:

§ 63.1573 What are my monitoring alternatives?

* * * * *

(b) *What is the approved alternative for monitoring pressure drop?* You may use this alternative to a continuous parameter monitoring system for pressure drop if you operate a jet ejector type wet scrubber or other type of wet scrubber equipped with atomizing spray nozzles. You shall:

(1) Conduct a daily check of the air or water pressure to the spray nozzles;

(2) Maintain records of the results of each daily check; and

(3) Repair or replace faulty (e.g., leaking or plugged) air or water lines within 12 hours of identification of an abnormal pressure reading.

(c) *What is the approved alternative for monitoring pH or alkalinity levels?* You may use the alternative in paragraph (c)(1) or (2) of this section for a catalytic reforming unit.

* * * * *

(d) *Can I use another type of monitoring system?* You may request approval from your permitting authority to use an automated data compression system. An automated data compression system does not record monitored operating parameter values at a set frequency (e.g., once every hour) but records all values that meet set criteria for variation from previously recorded values. Your request must contain a description of the monitoring system and data recording system, including the criteria used to determine which monitored values are recorded and retained, the method for calculating daily averages, and a demonstration that the system meets all of the criteria in paragraphs (d)(1) through (5) of this section:

* * * * *

(f) *How do I request to monitor alternative parameters?* You must submit a request for review and approval or disapproval to the Administrator. The request must include the information in paragraphs (f)(1) through (5) of this section.

* * * * *

(g) * * *

(1) You may request alternative monitoring requirements according to the procedures in this paragraph if you meet each of the conditions in paragraphs (g)(1)(i) through (iii) of this section:

* * * * *

■ 48. Section 63.1574 is amended by revising (a)(3) to read as follows:

§ 63.1574 What notifications must I submit and when?

(a) * * *

(3) If you are required to conduct an initial performance test, performance evaluation, design evaluation, opacity observation, visible emission observation, or other initial compliance demonstration, you must submit a notification of compliance status according to § 63.9(h)(2)(ii). You can submit this information in an operating

permit application, in an amendment to an operating permit application, in a separate submission, or in any combination. In a State with an approved operating permit program where delegation of authority under section 112(l) of the CAA has not been requested or approved, you must provide a duplicate notification to the applicable Regional Administrator. If the required information has been submitted previously, you do not have to provide a separate notification of compliance status. Just refer to the earlier submissions instead of duplicating and resubmitting the previously submitted information.

* * * * *

■ 49. Section 63.1575 is amended by:

■ a. Revising paragraphs (d) introductory text, (d)(1) and (2);

■ b. Adding paragraph (d)(4);

■ c. Revising paragraph (e) introductory text;

■ d. Removing and reserving paragraph (e)(1);

■ e. Revising paragraphs (e)(4) and (e)(6);

■ f. Revising paragraphs (f)(1) and (2);

■ g. Removing and reserving paragraph (h); and

■ h. Adding paragraph (k).

The revisions and additions read as follows:

§ 63.1575 What reports must I submit and when?

* * * * *

(d) For each deviation from an emission limitation and for each deviation from the requirements for work practice standards that occurs at an affected source where you are not using a continuous opacity monitoring system or a continuous emission monitoring system to comply with the emission limitation or work practice standard in this subpart, the semiannual compliance report must contain the information in paragraphs (c)(1) through (3) of this section and the information in paragraphs (d)(1) through (4) of this section.

(1) The total operating time of each affected source during the reporting period and identification of the sources for which there was a deviation.

(2) Information on the number, date, time, duration, and cause of deviations (including unknown cause, if applicable).

* * * * *

(4) The applicable operating limit or work practice standard from which you deviated and either the parameter monitor reading during the deviation or a description of how you deviated from the work practice standard.

(e) For each deviation from an emission limitation occurring at an affected source where you are using a continuous opacity monitoring system or a continuous emission monitoring system to comply with the emission limitation, you must include the information in paragraphs (c)(1) through (3) of this section, in paragraphs (d)(1) through (3) of this section, and in paragraphs (e)(2) through (13) of this section.

(1) [Reserved]

* * * * *

(4) An estimate of the quantity of each regulated pollutant emitted over the emission limit during the deviation, and a description of the method used to estimate the emissions.

* * * * *

(6) A breakdown of the total duration of the deviations during the reporting period and into those that are due to control equipment problems, process problems, other known causes, and other unknown causes.

* * * * *

(f) * * *

(1) You must include the information in paragraph (c)(1)(i) or (c)(1)(ii) of this section, if applicable.

(i) If you are complying with paragraph (k)(1) of this section, a summary of the results of any performance test done during the reporting period on any affected unit. Results of the performance test include the identification of the source tested, the date of the test, the percentage of emissions reduction or outlet pollutant concentration reduction (whichever is needed to determine compliance) for each run and for the average of all runs, and the values of the monitored operating parameters.

(ii) If you are not complying with paragraph (k)(1) of this section, a copy of any performance test done during the reporting period on any affected unit. The report may be included in the next semiannual compliance report. The copy must include a complete report for each test method used for a particular kind of emission point tested. For additional tests performed for a similar emission point using the same method, you must submit the results and any other information required, but a complete test report is not required. A complete test report contains a brief process description; a simplified flow diagram showing affected processes, control equipment, and sampling point locations; sampling site data; description of sampling and analysis procedures and any modifications to standard procedures; quality assurance procedures; record of operating conditions during the test; record of preparation of standards; record of calibrations; raw data sheets for field sampling; raw data sheets for field and laboratory analyses; documentation of calculations; and any other information required by the test method.

(2) Any requested change in the applicability of an emission standard (e.g., you want to change from the PM standard to the Ni standard for catalytic cracking units or from the HCl concentration standard to percent reduction for catalytic reforming units) in your compliance report. You must include all information and data necessary to demonstrate compliance with the new emission standard selected and any other associated requirements.

* * * * *

(k) *Electronic submittal of performance test and CEMS performance evaluation data.* On and after [THE DATE 3 YEARS AFTER DATE OF PUBLICATION OF THE FINAL RULE AMENDMENTS IN THE **FEDERAL REGISTER**], if required to submit the results of a performance test or CEMS performance evaluation, you must submit the results using EPA's Electronic Reporting Tool (ERT) according to the procedures in paragraphs (k)(1) and (2) of this section.

(1) Within 60 days after the date of completing each performance test as required by this subpart, you must submit the results of the performance tests according to the method specified by either paragraph (k)(1)(i) or (k)(1)(ii) of this section.

(i) For data collected using test methods supported by the EPA's ERT as listed on the EPA's ERT Web site (*http://www.epa.gov/ttn/chief/ert/index.html*), you must submit the results of the performance test to the Compliance and Emissions Data Reporting Interface (CEDRI) accessed through the EPA's Central Data Exchange (CDX) (*http://cdx.epa.gov/epa_home.asp*), unless the Administrator approves another approach. Performance test data must be submitted in a file format generated through use of the EPA's ERT. If you claim that some of the performance test information being submitted is confidential business information (CBI), you must submit a complete file generated through the use of the EPA's ERT, including information claimed to be CBI, on a compact disc or other commonly used electronic storage media (including, but not limited to, flash drives) by registered letter to the EPA. The electronic media must be clearly marked as CBI and mailed to

U.S. EPA/OAQPS/CORE CBI Office, Attention: WebFIRE Administrator, MD C404–02, 4930 Old Page Rd., Durham, NC 27703. The same ERT file with the CBI omitted must be submitted to the EPA via CDX as described earlier in this paragraph.

(ii) For data collected using test methods that are not supported by the EPA's ERT as listed on the EPA's ERT Web site, you must submit the results of the performance test to the Administrator at the appropriate address listed in § 63.13.

(2) Within 60 days after the date of completing each CEMS performance evaluation test required by § 63.1571(a) and (b), you must submit the results of the performance evaluation according to the method specified by either paragraph (k)(2)(i) or (k)(2)(ii) of this section.

(i) For data collection of relative accuracy test audit (RATA) pollutants that are supported by the EPA's ERT as listed on the ERT Web site, the owner or operator must submit the results of the performance evaluation to the CEDRI that is accessed through the EPA's CDX, unless the Administrator approves another approach. Performance evaluation data must be submitted in a file format generated through the use of the EPA's ERT. If an owner or operator claims that some of the performance evaluation information being submitted is CBI, the owner or operator must submit a complete file generated through the use of the EPA's ERT, including information claimed to be CBI, on a compact disc or other commonly used electronic storage media (including, but not limited to, flash drives) by registered letter to the EPA. The electronic media must be clearly marked as CBI and mailed to U.S. EPA/OAQPS/CORE CBI Office, Attention: WebFIRE Administrator, MD C404–02, 4930 Old Page Rd., Durham, NC 27703. The same ERT file with the CBI omitted must be submitted to the EPA via CDX as described earlier in this paragraph.

(ii) For any performance evaluation data with RATA pollutants that are not supported by the EPA's ERT as listed on the EPA's ERT Web site, you must submit the results of the performance evaluation to the Administrator at the appropriate address listed in § 63.13.

■ 50. Section 63.1576 is amended by:

■ a. Revising paragraph (a)(2);

■ b. Revising paragraphs (b)(3) and (5).

The revisions read as follows:

§ 63.1576 What records must I keep, in what form, and for how long?

(a) * * *

(2) The records specified in paragraphs (a)(2)(i) through (iv) of this section.

(i) Record the date, time, and duration of each startup and/or shutdown period, recording the periods when the affected source was subject to the standard applicable to startup and shutdown.

(ii) In the event that an affected unit fails to meet an applicable standard, record the number of failures. For each failure record the date, time and duration of each failure.

(iii) For each failure to meet an applicable standard, record and retain a list of the affected sources or equipment, an estimate of the volume of each regulated pollutant emitted over any emission limit and a description of the method used to estimate the emissions.

(iv) Record actions taken to minimize emissions in accordance with § 63.1570(c) and any corrective actions taken to return the affected unit to its normal or usual manner of operation.

* * * * *

(b) * * *

(3) The performance evaluation plan as described in § 63.8(d)(2) for the life of the affected source or until the affected source is no longer subject to the provisions of this part, to be made available for inspection, upon request, by the Administrator. If the performance evaluation plan is revised, you must keep previous (i.e., superseded) versions of the performance evaluation plan on record to be made available for inspection, upon request, by the Administrator, for a period of 5 years after each revision to the plan. The program of corrective action should be included in the plan required under § 63.8(d)(2).

* * * * *

(5) Records of the date and time that each deviation started and stopped.

* * * * *

■ 51. Section 63.1579 is amended by:

■ a. Revising section introductory text and

■ b. Revising the definitions of ''Deviation,'' and ''PM.''

The revisions read as follows:

§ 63.1579 What definitions apply to this subpart?

Terms used in this subpart are defined in the Clean Air Act (CAA), in 40 CFR 63.2, the General Provisions of this part (§§ 63.1 through 63.15), and in this section as listed. If the same term is defined in subpart A and in this section, it shall have the meaning given in this section for purposes of this subpart.

* * * * *

Deviation means any instance in which an affected source subject to this subpart, or an owner or operator of such a source:

(1) Fails to meet any requirement or obligation established by this subpart, including but not limited to any emission limit, operating limit, or work practice standard; or

(2) Fails to meet any term or condition that is adopted to implement an applicable requirement in this subpart and that is included in the operating permit for any affected source required to obtain such a permit.

* * * * *

PM means, for the purposes of this subpart, emissions of particulate matter that serve as a surrogate measure of the total emissions of particulate matter and metal HAP contained in the particulate matter, including but not limited to: antimony, arsenic, beryllium, cadmium, chromium, cobalt, lead, manganese, nickel, and selenium as measured by Methods 5, 5B or 5F in Appendix A–3 to part 60 of this chapter or by an approved alternative method.

* * * * *

■ 52. Table 1 to subpart UUU of part 63 is revised to read as follows:

As stated in § 63.1564(a)(1), you shall meet each emission limitation in the following table that applies to you.

TABLE 1 TO SUBPART UUU OF PART 63—METAL HAP EMISSION LIMITS FOR CATALYTIC CRACKING UNITS

For each new or existing catalytic cracking unit . . .	You shall meet the following emission limits for each catalyst regenerator vent . . .
1. Subject to new source performance standard (NSPS) for PM in 40 CFR 60.102.	PM emissions must not exceed 1.0 gram per kilogram (g/kg) (1.0 lb/1,000 lb) of coke burn-off. Before [THE DATE 18 MONTHS AFTER THE DATE OF PUBLICATION OF THE FINAL RULE AMENDMENTS IN THE FEDERAL REGISTER], if the discharged gases pass through an incinerator or waste heat boiler in which you burn auxiliary or in supplemental liquid or solid fossil fuel, the incremental rate of PM emissions must not exceed 43.0 grams per Gigajoule (g/GJ) or 0.10 pounds per million British thermal units (lb/million Btu) of heat input attributable to the liquid or solid fossil fuel; and the opacity of emissions must not exceed 30 percent, except for one 6-minute average opacity reading in any 1-hour period.
2. Subject to NSPS for PM in 40 CFR 60.102a(b)(1)(i)	PM emissions must not exceed 1.0 g/kg (1.0 lb PM/1,000 lb) of coke burn-off or, if a PM CEMS is used, 0.040 grain per dry standard cubic feet (gr/dscf) corrected to 0 percent excess air.
3. Subject to NSPS for PM in 40 CFR 60.102a(b)(1)(ii)	PM emissions must not exceed 0.5 g/kg coke burn-off (0.5 lb/1000 lb coke burn-off) or, if a PM CEMS is used, 0.020 gr/dscf corrected to 0 percent excess air.
4. Option 1: PM per coke burn-off limit, not subject to the NSPS for PM in 40 CFR 60.102 or in 40 CFR 60.102a(b)(1).	PM emissions must not exceed the limits specified in Item 1 of this table.
5. Option 2: PM concentration limit, not subject to the NSPS for PM in 40 CFR 60.102 or in 40 CFR 60.102a(b)(1).	PM emissions must not exceed 0.040 gr/dscf corrected to 0 percent excess air.
6. Option 3: Ni lb/hr limit, not subject to the NSPS for PM in 40 CFR 60.102 or in 40 CFR 60.102a(b)(1).	Nickel (Ni) emissions must not exceed 13,000 milligrams per hour (mg/hr) (0.029 lb/hr).
7. Option 4: Ni per coke burn-off limit, not subject to the NSPS for PM in 40 CFR 60.102 or in 40 CFR 60.102a(b)(1).	Ni emissions must not exceed 1.0 mg/kg (0.001 lb/1,000 lb) of coke burn-off in the catalyst regenerator.

■ 53. Table 2 to subpart UUU of part 63 is revised to read as follows:

As stated in § 63.1564(a)(2), you shall meet each operating limit in the following table that applies to you.

TABLE 2 TO SUBPART UUU OF PART 63—OPERATING LIMITS FOR METAL HAP EMISSIONS FROM CATALYTIC CRACKING UNITS

For each new or existing catalytic cracking unit . . .	For this type of continuous monitoring system . . .	For this type of control device . . .	You shall meet this operating limit . . .
1. Subject to the NSPS for PM in 40 CFR 60.102.	a. Continuous opacity monitoring system used to comply with the 30 percent opacity limit in 40 CFR 60.102 before [THE DATE 18 MONTHS AFTER THE DATE OF PUBLICATION OF THE FINAL RULE AMENDMENTS IN THE **FEDERAL REGISTER**].	Not applicable	Not applicable.
	b. Continuous opacity monitoring system used to comply with a site-specific opacity limit.	Cyclone, fabric filter, or electrostatic precipitator.	Maintain the 3-hour rolling average opacity of emissions from your catalyst regenerator vent no higher than the site-specific opacity limit established during the performance test.
	c. Continuous parameter monitoring systems.	Electrostatic precipitator	Maintain the daily average coke burn-off rate or daily average flow rate no higher than the limit established in the performance test; and maintain the 3-hour rolling average total power and secondary current above the limit established in the performance test.
	d. Continuous parameter monitoring systems.	Wet scrubber	Maintain the 3-hour rolling average pressure drop above the limit established in the performance test; and maintain the 3-hour rolling average liquid-to-gas ratio above the limit established in the performance test.

TABLE 2 TO SUBPART UUU OF PART 63—OPERATING LIMITS FOR METAL HAP EMISSIONS FROM CATALYTIC CRACKING UNITS—Continued

For each new or existing catalytic cracking unit . . .	For this type of continuous monitoring system . . .	For this type of control device . . .	You shall meet this operating limit . . .
	e. Bag leak detection (BLD) system.	Fabric filter	Maintain particulate loading below the BLD alarm set point established in the initial adjustment of the BLD system or allowable seasonal adjustments.
2. Subject to NSPS for PM in 40 CFR 60.102a(b)(1)(i).	a. PM CEMS	Not applicable	Not applicable.
	b. Continuous opacity monitoring system used to comply with a site-specific opacity limit.	Cyclone or electrostatic precipitator.	Maintain the 3-hour rolling average opacity of emissions from your catalyst regenerator vent no higher than the site-specific opacity limit established during the performance test.
	c. Continuous parameter monitoring systems.	Electrostatic precipitator	Maintain the daily average coke burn-off rate or daily average flow rate no higher than the limit established in the performance test; and maintain the 3-hour rolling average total power and secondary current above the limit established in the performance test.
	d. Continuous parameter monitoring systems.	Wet scrubber	Maintain the 3-hour rolling average pressure drop above the limit established in the performance test; and maintain the 3-hour rolling average liquid-to-gas ratio above the limit established in the performance test.
	e. Bag leak detection (BLD) system.	Fabric filter	Maintain particulate loading below the BLD alarm set point established in the initial adjustment of the BLD system or allowable seasonal adjustments.
3. Subject to NSPS for PM in 40 CFR 60.102a(b)(1)(ii).	Any	Any	The applicable operating limits in Item 2 of this table.
4. Option 1: PM per coke burn-off limit not subject to the NSPS for PM in 40 CFR 60.102 or 40 CFR 60.102a(b)(1).	a. Continuous opacity monitoring system used to comply with a site-specific opacity limit.	Cyclone, fabric filter, or electrostatic precipitator.	Maintain the 3-hour rolling average opacity of emissions from your catalyst regenerator vent no higher than the site-specific opacity limit established during the performance test. Alternatively, before [THE DATE 18 MONTHS AFTER THE DATE OF PUBLICATION OF THE FINAL RULE AMENDMENTS IN THE **FEDERAL REGISTER**], you may maintain the hourly average opacity of emissions from your catalyst generator vent no higher than the site-specific opacity limit established during the performance test.
	b. Continuous parameter monitoring systems.	i. Electrostatic precipitator	(1) Maintain the daily average gas flow rate or daily average coke burn-off rate no higher than the limit established in the performance test.

TABLE 2 TO SUBPART UUU OF PART 63—OPERATING LIMITS FOR METAL HAP EMISSIONS FROM CATALYTIC CRACKING UNITS—Continued

For each new or existing catalytic cracking unit . . .	For this type of continuous monitoring system . . .	For this type of control device . . .	You shall meet this operating limit . . .
			(2) Maintain the 3-hour rolling average total power and secondary current above the limit established in the performance test. Alternatively, before [THE DATE 18 MONTHS AFTER THE DATE OF PUBLICATION OF THE FINAL RULE AMENDMENTS IN THE **FEDERAL REGISTER**], you may maintain the daily average voltage and secondary current (or total power input) above the limit established in the performance test.
		ii. Wet scrubber	(1) Maintain the 3-hour rolling average pressure drop above the limit established in the performance test. Alternatively, before [THE DATE 18 MONTHS AFTER THE DATE OF PUBLICATION OF THE FINAL RULE AMENDMENTS IN THE **FEDERAL REGISTER**], you may maintain the daily average pressure drop above the limit established in the performance test (not applicable to a wet scrubber of the non-venturi jet-ejector design).
			(2) Maintain the 3-hour rolling average liquid-to-gas ratio above the limit established in the performance test. Alternatively, before [THE DATE 18 MONTHS AFTER THE DATE OF PUBLICATION OF THE FINAL RULE AMENDMENTS IN THE **FEDERAL REGISTER**], you may maintain the daily average liquid-to-gas ratio above the limit established in the performance test.
	c. Bag leak detection (BLD) system.	Fabric filter	Maintain particulate loading below the BLD alarm set point established in the initial adjustment of the BLD system or allowable seasonal adjustments.
5. Option 2: PM concentration limit not subject to the NSPS for PM in 40 CFR 60.102 or 40 CFR 60.102a(b)(1).	PM CEMS	Any	Not applicable.
6. Option 3: Ni lb/hr limit not subject to the NSPS for PM in 40 CFR 60.102.	a. Continuous opacity monitoring system.	Cyclone, fabric filter, or electrostatic precipitator.	Maintain the 3-hour rolling average Ni operating value no higher than the limit established during the performance test. Alternatively, before [THE DATE 18 MONTHS AFTER THE DATE OF PUBLICATION OF THE FINAL RULE AMENDMENTS IN THE **FEDERAL REGISTER**], you may maintain the daily average Ni operating value no higher than the limit established during the performance test.

TABLE 2 TO SUBPART UUU OF PART 63—OPERATING LIMITS FOR METAL HAP EMISSIONS FROM CATALYTIC CRACKING UNITS—Continued

For each new or existing catalytic cracking unit . . .	For this type of continuous monitoring system . . .	For this type of control device . . .	You shall meet this operating limit . . .
	b. Continuous parameter monitoring systems.	i. Electrostatic precipitator	(1) Maintain the daily average gas flow rate or daily average coke burn-off rate no higher than the limit established during the performance test. (2) Maintain the monthly rolling average of the equilibrium catalyst Ni concentration no higher than the limit established during the performance test. (3) Maintain the 3-hour rolling average total power and secondary current above the limit established in the performance test. Alternatively, before [THE DATE 18 MONTHS AFTER THE DATE OF PUBLICATION OF THE FINAL RULE AMENDMENTS IN THE **FEDERAL REGISTER**], you may maintain the daily average voltage and secondary current (or total power input) above the established during the performance test.
		ii. Wet scrubber	(1) Maintain the monthly rolling average of the equilibrium catalyst Ni concentration no higher than the limit established during the performance test. (2) Maintain the 3-hour rolling average pressure drop above the limit established in the performance test. Alternatively, before [THE DATE 18 MONTHS AFTER THE DATE OF PUBLICATION OF THE FINAL RULE AMENDMENTS IN THE **FEDERAL REGISTER**], you may maintain the daily average pressure drop above the limit established during the performance test (not applicable to a non-venturi wet scrubber of the jet-ejector design). (3) Maintain the 3-hour rolling average liquid-to-gas ratio above the limit established in the performance test. Alternatively, before [THE DATE 18 MONTHS AFTER THE DATE OF PUBLICATION OF THE FINAL RULE AMENDMENTS IN THE **FEDERAL REGISTER**], you may maintain the daily average liquid-to-gas ratio above the limit established during the performance test.

TABLE 2 TO SUBPART UUU OF PART 63—OPERATING LIMITS FOR METAL HAP EMISSIONS FROM CATALYTIC CRACKING UNITS—Continued

For each new or existing catalytic cracking unit . . .	For this type of continuous monitoring system . . .	For this type of control device . . .	You shall meet this operating limit . . .
7. Option 4: Ni per coke burn-off limit not subject to the NSPS for PM in 40 CFR 60.102.	a. Continuous opacity monitoring system.	Cyclone, baghouse, or electrostatic precipitator.	Maintain the 3-hour rolling average Ni operating value no higher than Ni operating limit established during the performance test. Alternatively, before [THE DATE 18 MONTHS AFTER THE DATE OF PUBLICATION OF THE FINAL RULE AMENDMENTS IN THE **FEDERAL REGISTER**], you may elect to maintain the daily average Ni operating value no higher than the Ni operating limit established during the performance test.
	b. Continuous parameter monitoring systems.	i. Electrostatic precipitator	(1) Maintain the monthly rolling average of the equilibrium catalyst Ni concentration no higher than the limit established during the performance test. (2) Maintain the 3-hour rolling average total power and secondary current above the limit established in the performance test. Alternatively, before [THE DATE 18 MONTHS AFTER THE DATE OF PUBLICATION OF THE FINAL RULE AMENDMENTS IN THE **FEDERAL REGISTER**], you may maintain the daily average voltage and secondary current (or total power input) above the limit established during the performance test.
		ii. Wet scrubber	(1) Maintain the monthly rolling average of the equilibrium catalyst Ni concentration no higher than the limit established during the performance test. (2) Maintain the 3-hour rolling average pressure drop above the limit established in the performance test. Alternatively, before [THE DATE 18 MONTHS AFTER THE DATE OF PUBLICATION OF THE FINAL RULE AMENDMENTS IN THE **FEDERAL REGISTER**], you may maintain the daily average pressure drop above the limit established during the performance test (not applicable to a non-venturi wet scrubber of the jet-ejector design). (3) Maintain the 3-hour rolling average liquid-to-gas ratio above the limit established in the performance test. Alternatively, before [THE DATE 18 MONTHS AFTER THE DATE OF PUBLICATION OF THE FINAL RULE AMENDMENTS IN THE **FEDERAL REGISTER**], you may maintain the daily average liquid-to-gas ratio above the limit established during the performance test.

■ 54. Table 3 to subpart UUU of part 63 is revised to read as follows:

As stated in § 63.1564(b)(1), you shall meet each requirement in the following table that applies to you.

TABLE 3 TO SUBPART UUU OF PART 63—CONTINUOUS MONITORING SYSTEMS FOR METAL HAP EMISSIONS FROM CATALYTIC CRACKING UNITS

For each new or existing catalytic cracking unit . . .	If you use this type of control device for your vent . . .	You shall install, operate, and maintain a . . .
1. Subject to the NSPS for PM in 40 CFR 60.102.	a. Cyclone	Continuous opacity monitoring system to measure and record the opacity of emissions from each catalyst regenerator vent.
	b. Electrostatic precipitator	Continuous opacity monitoring system to measure and record the opacity of emissions from each catalyst regenerator vent; or continuous parameter monitoring systems to measure and record the coke burn-off rate or the gas flow rate entering or exiting the control device [1] and the total power and secondary current to the control device.
	c. Wet scrubber	Continuous parameter monitoring system to measure and record the pressure drop across the scrubber,[2] coke burn-off rate or the gas flow rate entering or exiting the control device,[1] and total liquid (or scrubbing liquor) flow rate to the control device. Alternatively, before [THE DATE 3 YEARS AFTER THE DATE OF PUBLICATION OF THE FINAL RULE AMENDMENTS IN THE **FEDERAL REGISTER**], continuous opacity monitoring system to measure and record the opacity of emissions from each catalyst regenerator vent.
	d. Fabric Filter	Continuous bag leak detection system to measure and record increases in relative particulate loading from each catalyst regenerator vent or a continuous opacity monitoring system to measure and record the opacity of emissions from each catalyst regenerator vent.
2. Subject to NSPS for PM in 40 CFR 60.102a(b)(1)(i) electing to meet the PM per coke burn-off limit.	a. Cyclone	Continuous opacity monitoring system to measure and record the opacity of emissions from each catalyst regenerator vent.
	b. Electrostatic precipitator	Continuous opacity monitoring system to measure and record the opacity of emissions from each catalyst regenerator vent; or continuous parameter monitoring systems to measure and record the coke burn-off rate or the gas flow rate entering or exiting the control device,[1] the voltage, current, and secondary current to the control device.
	c. Wet scrubber	Continuous parameter monitoring system to measure and record the pressure drop across the scrubber,[2] the coke burn-off rate or the gas flow rate entering or exiting the control device,[1] and total liquid (or scrubbing liquor) flow rate to the control device.
	d. Fabric Filter	Continuous bag leak detection system to measure and record increases in relative particulate loading from each catalyst regenerator vent.
3. Subject to NSPS for PM in 40 CFR 60.102a(b)(1)(i) electing to meet the PM concentration limit.	Any	Continuous emission monitoring system to measure and record the concentration of PM and oxygen from each catalyst regenerator vent.
4. Subject to NSPS for PM in 40 CFR 60.102a(b)(1)(ii) electing to meet the PM per coke burn-off limit.	Any	See item 2 of this table.
5. Subject to NSPS for PM in 40 CFR 60.102a(b)(1)(ii) electing to meet the PM concentration limit.	Any	See item 3 of this table.

TABLE 3 TO SUBPART UUU OF PART 63—CONTINUOUS MONITORING SYSTEMS FOR METAL HAP EMISSIONS FROM CATALYTIC CRACKING UNITS—Continued

For each new or existing catalytic cracking unit . . .	If you use this type of control device for your vent . . .	You shall install, operate, and maintain a . . .
6. Option 1: PM per coke burn-off limit not subject to the NSPS for PM in 40 CFR 60.102 or 40 CFR 60.120a(b)(1).	Any	See item 1 of this table.
7. Option 2: PM concentration limit not subject to the NSPS for PM in 40 CFR 60.102 or 40 CFR 60.120a(b)(1).	Any	See item 3 of this table.
8. Option 3: Ni lb/hr limit not subject to the NSPS for PM in 40 CFR 60.102 or in 40 CFR 60.102a(b)(1).	a. Cyclone	Continuous opacity monitoring system to measure and record the opacity of emissions from each catalyst regenerator vent and continuous parameter monitoring system to measure and record the coke burn-off rate or the gas flow rate entering or exiting the control device.[1]
	b. Electrostatic precipitator	Continuous opacity monitoring system to measure and record the opacity of emissions from each catalyst regenerator vent and continuous parameter monitoring system to measure and record the coke burn-off rate or the gas flow rate entering or exiting the control device;[1] or continuous parameter monitoring systems to measure and record the coke burn-off rate or the gas flow rate entering or exiting the control device[1] and the voltage and current [to measure the total power to the system] and secondary current to the control device.
	c. Wet scrubber	Continuous parameter monitoring system to measure and record the pressure drop across the scrubber,[2] gas flow rate entering or exiting the control device,[1] and total liquid (or scrubbing liquor) flow rate to the control device.
	d. Fabric Filter	Continuous bag leak detection system to measure and record increases in relative particulate loading from each catalyst regenerator vent or the monitoring systems specified in item 8.a of this table.
9. Option 4: Ni lb/1,000 lbs of coke burn-off limit not subject to the NSPS for PM in 40 CFR 60.102 or in 40 CFR 60.102a(b)(1).	a. Cyclone	Continuous opacity monitoring system to measure and record the opacity of emissions from each catalyst regenerator vent and continuous parameter monitoring system to measure and record the gas flow rate entering or exiting the control device.[1]
	b. Electrostatic precipitator	Continuous opacity monitoring system to measure and record the opacity of emissions from each catalyst regenerator vent and continuous parameter monitoring system to measure and record the coke burn-off rate or the gas flow rate entering or exiting the control device;[1] or continuous parameter monitoring systems to measure and record the coke burn-off rate or the gas flow rate entering or exiting the control device[1] and voltage and current [to measure the total power to the system] and secondary current to the control device.
	c. Wet scrubber	Continuous parameter monitoring system to measure and record the pressure drop across the scrubber,[2] gas flow rate entering or exiting the control device,[1] and total liquid (or scrubbing liquor) flow rate to the control device.
	d. Fabric Filter	Continuous bag leak detection system to measure and record increases in relative particulate loading from each catalyst regenerator vent or the monitoring systems specified in item 9.a of this table.

[1] If applicable, you can use the alternative in § 63.1573(a)(1) instead of a continuous parameter monitoring system for gas flow rate.

[2] If you use a jet ejector type wet scrubber or other type of wet scrubber equipped with atomizing spray nozzles, you can use the alternative in § 63.1573(b) instead of a continuous parameter monitoring system for pressure drop across the scrubber.

■ 55. Table 4 to subpart UUU of part 63 is revised to read as follows:

As stated in § 63.1564(b)(2), you shall meet each requirement in the following table that applies to you.

TABLE 4 TO SUBPART UUU OF PART 63—REQUIREMENTS FOR PERFORMANCE TESTS FOR METAL HAP EMISSIONS FROM CATALYTIC CRACKING UNITS NOT SUBJECT TO THE NEW SOURCE PERFORMANCE STANDARD (NSPS) FOR PARTICULATE MATTER (PM)

For each new or existing catalytic cracking unit catalyst regenerator vent . . .	You must . . .	Using . . .	According to these requirements . . .
1. Any	a. Select sampling port's location and the number of traverse ports.	Method 1 or 1A in Appendix A–1 to part 60 of this chapter.	Sampling sites must be located at the outlet of the control device or the outlet of the regenerator, as applicable, and prior to any releases to the atmosphere.
	b. Determine velocity and volumetric flow rate.	Method 2, 2A, 2C, 2D, 2F in Appendix A–1 to part 60 of this chapter, or 2G in Appendix A–2 to part 60 of this chapter, as applicable.	
	c. Conduct gas molecular weight analysis.	Method 3, 3A, or 3B in Appendix A–2 to part 60 of this chapter, as applicable.	
	d. Measure moisture content of the stack gas.	Method 4 in Appendix A–3 to part 60 of this chapter.	
	e. If you use an electrostatic precipitator, record the total number of fields in the control system and how many operated during the applicable performance test.		
	f. If you use a wet scrubber, record the total amount (rate) of water (or scrubbing liquid) and the amount (rate) of make-up liquid to the scrubber during each test run.		
2. Option 1: PM per coke burn-off limit, not subject to the NSPS for PM in 40 CFR 60.102 or in 40 CFR 60.102a(b)(1).	a. Measure PM emissions	Method 5, 5B, or 5F (40 CFR part 60, Appendix A–3) to determine PM emissions and associated moisture content for units without wet scrubbers. Method 5 or 5B (40 CFR part 60, Appendix A–3) to determine PM emissions and associated moisture content for unit with wet scrubber.	You must maintain a sampling rate of at least 0.15 dry standard cubic meters per minute (dscm/min) (0.53 dry standard cubic feet per minute (dscf/min).
	b. Compute coke burn-off rate and PM emission rate (lb/1,000 lb of coke burn-off).	Equations 1, 2, and 3 of § 63.1564 (if applicable).	
	c. Measure opacity of emissions	Continuous opacity monitoring system.	You must collect opacity monitoring data every 10 seconds during the entire period of the Method 5, 5B, or 5F performance test and reduce the data to 6-minute averages.
3. Option 2: PM concentration limit, not subject to the NSPS for PM in 40 CFR 60.102 or in 40 CFR 60.102a(b)(1).	a. Measure PM concentration	Method 5, 5B, or 5F (40 CFR part 60, Appendix A–3) to determine PM concentration and associated moisture content for units without wet scrubbers Method 5 or 5B (40 CFR part 60, Appendix A–3) to determine PM concentration and associated moisture content for unit with wet scrubber.	You must maintain a sampling rate of at least 0.15 dry standard cubic meters per minute (dscm/min) (0.53 dry standard cubic feet per minute (dscf/min).

TABLE 4 TO SUBPART UUU OF PART 63—REQUIREMENTS FOR PERFORMANCE TESTS FOR METAL HAP EMISSIONS FROM CATALYTIC CRACKING UNITS NOT SUBJECT TO THE NEW SOURCE PERFORMANCE STANDARD (NSPS) FOR PARTICULATE MATTER (PM)—Continued

For each new or existing catalytic cracking unit catalyst regenerator vent . . .	You must . . .	Using . . .	According to these requirements . . .
4. Option 3: Ni lb/hr limit, not subject to the NSPS for PM in 40 CFR 60.102 or in 40 CFR 60.102a(b)(1).	a. Measure concentration of Ni	Method 29 (40 CFR part 60, Appendix A–8).	
	b. Compute Ni emission rate (lb/hr).	Equation 5 of § 63.1564.	
	c. Determine the equilibrium catalyst Ni concentration.	XRF procedure in Appendix A to this subpart; [1] or EPA Method 6010B or 6020 or EPA Method 7520 or 7521 in SW–846; [2] or an alternative to the SW–846 method satisfactory to the Administrator.	You must obtain 1 sample for each of the 3 runs; determine and record the equilibrium catalyst Ni concentration for each of the 3 samples; and you may adjust the laboratory results to the maximum value using Equation 2 of § 63.1571.
	d. If you use a continuous opacity monitoring system, establish your site-specific Ni operating limit.	i. Equations 6 and 7 of § 63.1564 using data from continuous opacity monitoring system, gas flow rate, results of equilibrium catalyst Ni concentration analysis, and Ni emission rate from Method 29 test.	(1) You must collect opacity monitoring data every 10 seconds during the entire period of the initial Ni performance test; reduce the data to 6-minute averages; and determine and record the hourly average opacity from all the 6-minute averages. (2) You must collect gas flow rate monitoring data every 15 minutes during the entire period of the initial Ni performance test; measure the gas flow as near as practical to the continuous opacity monitoring system; and determine and record the hourly average actual gas flow rate from all the readings.
5. Option 4: Ni per coke burn-off limit, not subject to the NSPS for PM in 40 CFR 60.102 or in 40 CFR 60.102a(b)(1).	a. Measure concentration of Ni	Method 29 (40 CFR part 60, Appendix A–8).	
	b. Compute Ni emission rate (lb/1,000 lb of coke burn-off).	Equations 1 and 8 of § 63.1564.	
	c. Determine the equilibrium catalyst Ni concentration.	See item 4.c. of this table	You must obtain 1 sample for each of the 3 runs; determine and record the equilibrium catalyst Ni concentration for each of the 3 samples; and you may adjust the laboratory results to the maximum value using Equation 2 of § 63.1571.
	d. If you use a continuous opacity monitoring system, establish your site-specific Ni operating limit.	i. Equations 9 and 10 of § 63.1564 with data from continuous opacity monitoring system, coke burn-off rate, results of equilibrium catalyst Ni concentration analysis, and Ni emission rate from Method 29 test.	(1) You must collect opacity monitoring data every 10 seconds during the entire period of the initial Ni performance test; reduce the data to 6-minute averages; and determine and record the hourly average opacity from all the 6-minute averages. (2) You must collect gas flow rate monitoring data every 15 minutes during the entire period of the initial Ni performance test; measure the gas flow rate as near as practical to the continuous opacity monitoring system; and determine and record the hourly average actual gas flow rate from all the readings.

TABLE 4 TO SUBPART UUU OF PART 63—REQUIREMENTS FOR PERFORMANCE TESTS FOR METAL HAP EMISSIONS FROM CATALYTIC CRACKING UNITS NOT SUBJECT TO THE NEW SOURCE PERFORMANCE STANDARD (NSPS) FOR PARTICULATE MATTER (PM)—Continued

For each new or existing catalytic cracking unit catalyst regenerator vent . . .	You must . . .	Using . . .	According to these requirements . . .
	e. Record the catalyst addition rate for each test and schedule for the 10-day period prior to the test.		
6. If you elect Option 1 in item 4 in Table 1, Option 3 in item 6 in Table 1, or Option 4 in item 7 in Table 1 of this subpart and you use continuous parameter monitoring systems.	a. Establish each operating limit in Table 2 of this subpart that applies to you.	Data from the continuous parameter monitoring systems and applicable performance test methods.	
	b. Electrostatic precipitator or wet scrubber: gas flow rate.	i. Data from the continuous parameter monitoring systems and applicable performance test methods.	(1) You must collect gas flow rate monitoring data every 15 minutes during the entire period of the initial performance test. (2) You must determine and record the 3-hr average gas flow rate from all the readings. Alternatively, before [THE DATE 18 MONTHS AFTER THE DATE OF PUBLICATION OF THE FINAL RULE AMENDMENTS IN THE **FEDERAL REGISTER**], you may determine and record the maximum hourly average gas flow rate from all the readings.
	c. Electrostatic precipitator: voltage and secondary current (or total power input).	i. Data from the continuous parameter monitoring systems and applicable performance test methods.	(1) You must collect voltage, current, and secondary current monitoring data every 15 minutes during the entire period of the performance test. Alternatively, before [THE DATE 18 MONTHS AFTER THE DATE OF PUBLICATION OF THE FINAL RULE AMENDMENTS IN THE **FEDERAL REGISTER**], you may collect voltage and secondary current (or total power input) monitoring data every 15 minutes during the entire period of the initial performance test. (2) You must determine and record the 3-hr average total power to the system and the 3-hr average secondary current. Alternatively, before [THE DATE 18 MONTHS AFTER THE DATE OF PUBLICATION OF THE FINAL RULE AMENDMENTS IN THE **FEDERAL REGISTER**], you may determine and record the minimum hourly average voltage and secondary current (or total power input) from all the readings.
	d. Electrostatic precipitator or wet scrubber: equilibrium catalyst Ni concentration.	Results of analysis for equilibrium catalyst Ni concentration.	You must determine and record the average equilibrium catalyst Ni concentration for the 3 runs based on the laboratory results. You may adjust the value using Equation 1 or 2 of § 63.1571 as applicable.

TABLE 4 TO SUBPART UUU OF PART 63—REQUIREMENTS FOR PERFORMANCE TESTS FOR METAL HAP EMISSIONS FROM CATALYTIC CRACKING UNITS NOT SUBJECT TO THE NEW SOURCE PERFORMANCE STANDARD (NSPS) FOR PARTICULATE MATTER (PM)—Continued

For each new or existing catalytic cracking unit catalyst regenerator vent . . .	You must . . .	Using . . .	According to these requirements . . .
	e. Wet scrubber: pressure drop (not applicable to non-venturi scrubber of jet ejector design).	i. Data from the continuous parameter monitoring systems and applicable performance test methods.	(1) You must collect pressure drop monitoring data every 15 minutes during the entire period of the initial performance test. (2) You must determine and record the 3-hr average pressure drop from all the readings. Alternatively, before [THE DATE 18 MONTHS AFTER THE DATE OF PUBLICATION OF THE FINAL RULE AMENDMENTS IN THE **FEDERAL REGISTER**], you may determine and record the minimum hourly average pressure drop from all the readings.
	f. Wet scrubber: liquid-to-gas ratio	i. Data from the continuous parameter monitoring systems and applicable performance test methods.	(1) You must collect gas flow rate and total water (or scrubbing liquid) flow rate monitoring data every 15 minutes during the entire period of the initial performance test. (2) You must determine and record the hourly average liquid-to-gas ratio from all the readings. Alternatively, before [THE DATE 18 MONTHS AFTER THE DATE OF PUBLICATION OF THE FINAL RULE AMENDMENTS IN THE **FEDERAL REGISTER**], you may determine and record the hourly average gas flow rate and total water (or scrubbing liquid) flow rate from all the readings. (3) You must determine and record the 3-hr average liquid-to-gas ratio. Alternatively, before [THE DATE 18 MONTHS AFTER THE DATE OF PUBLICATION OF THE FINAL RULE AMENDMENTS IN THE **FEDERAL REGISTER**], you may determine and record the minimum liquid-to-gas ratio.
	g. Alternative procedure for gas flow rate.	i. Data from the continuous parameter monitoring systems and applicable performance test methods.	(1) You must collect air flow rate monitoring data or determine the air flow rate using control room instrumentation every 15 minutes during the entire period of the initial performance test. (2) You must determine and record the 3-hr average rate of all the readings. Alternatively, before [THE DATE 18 MONTHS AFTER THE DATE OF PUBLICATION OF THE FINAL RULE AMENDMENTS IN THE **FEDERAL REGISTER**], you may determine and record the hourly average rate of all the readings.

TABLE 4 TO SUBPART UUU OF PART 63—REQUIREMENTS FOR PERFORMANCE TESTS FOR METAL HAP EMISSIONS FROM CATALYTIC CRACKING UNITS NOT SUBJECT TO THE NEW SOURCE PERFORMANCE STANDARD (NSPS) FOR PARTICULATE MATTER (PM)—Continued

For each new or existing catalytic cracking unit catalyst regenerator vent . . .	You must . . .	Using . . .	According to these requirements . . .
			(3) You must determine and record the maximum gas flow rate using Equation 1 of § 63.1573.

[1] Determination of Metal Concentration on Catalyst Particles (Instrumental Analyzer Procedure).

[2] EPA Method 6010B, Inductively Coupled Plasma-Atomic Emission Spectrometry, EPA Method 6020, Inductively Coupled Plasma-Mass Spectrometry, EPA Method 7520, Nickel Atomic Absorption, Direct Aspiration, and EPA Method 7521, Nickel Atomic Absorption, Direct Aspiration are included in ''Test Methods for Evaluating Solid Waste, Physical/Chemical Methods,'' EPA Publication SW–846, Revision 5 (April 1998). The SW–846 and Updates (document number 955–001–00000–1) are available for purchase from the Superintendent of Documents, U.S. Government Printing Office, Washington, DC 20402, (202) 512–1800; and from the National Technical Information Services (NTIS), 5285 Port Royal Road, Springfield, VA 22161, (703) 487–4650. Copies may be inspected at the EPA Docket Center, William Jefferson Clinton (WJC) West Building (Air Docket), Room 3334, 1301 Constitution Ave. NW., Washington, DC; or at the Office of the Federal Register, 800 North Capitol Street NW., Suite 700, Washington, DC.

■ 56. Table 5 to subpart UUU of part 63 is revised to read as follows:

As stated in § 63.1564(b)(5), you shall meet each requirement in the following table that applies to you.

TABLE 5 TO SUBPART UUU OF PART 63—INITIAL COMPLIANCE WITH METAL HAP EMISSION LIMITS FOR CATALYTIC CRACKING UNITS

For each new and existing catalytic cracking unit catalyst regenerator vent . . .	For the following emission limit . . .	You have demonstrated initial compliance if . . .
1. Subject to the NSPS for PM in 40 CFR 60.102.	PM emissions must not exceed 1.0 gram per kilogram (g/kg) (1.0 lb/1,000 lb) of coke burn-off. Before [THE DATE 18 MONTHS AFTER THE DATE OF PUBLICATION OF THE FINAL RULE AMENDMENTS IN THE **FEDERAL REGISTER**], if the discharged gases pass through an incinerator or waste heat boiler in which you burn auxiliary or supplemental liquid or solid fossil fuel, the incremental rate of PM must not exceed 43.0 grams per Gigajoule (g/GJ) or 0.10 pounds per million British thermal units (lb/million Btu) of heat input attributable to the liquid or solid fossil fuel; and the opacity of emissions must not exceed 30 percent, except for one 6-minute average opacity reading in any 1-hour period.	You have already conducted a performance test to demonstrate initial compliance with the NSPS and the measured PM emission rate is less than or equal to 1.0 g/kg (1.0 lb/1,000 lb) of coke burn-off in the catalyst regenerator. As part of the Notification of Compliance Status, you must certify that your vent meets the PM limit. You are not required to do another performance test to demonstrate initial compliance. As part of your Notification of Compliance Status, you certify that your BLD; CO_2, O_2, or CO monitor; or continuous opacity monitoring system meets the requirements in § 63.1572.
2. Subject to NSPS for PM in 40 CFR 60.102a(b)(1)(i), electing to meet the PM per coke burn-off limit.	PM emissions must not exceed 0.5 g/kg (0.5 lb PM/1,000 lb) of coke burn-off or,	You have already conducted a performance test to demonstrate initial compliance with the NSPS and the measured PM emission rate is less than or equal to 1.0 g/kg (1.0 lb/1,000 lb) of coke burn-off in the catalyst regenerator. As part of the Notification of Compliance Status, you must certify that your vent meets the PM limit. You are not required to do another performance test to demonstrate initial compliance. As part of your Notification of Compliance Status, you certify that your BLD; CO_2, O_2, or CO monitor; or continuous opacity monitoring system meets the requirements in § 63.1572.

TABLE 5 TO SUBPART UUU OF PART 63—INITIAL COMPLIANCE WITH METAL HAP EMISSION LIMITS FOR CATALYTIC CRACKING UNITS—Continued

For each new and existing catalytic cracking unit catalyst regenerator vent . . .	For the following emission limit . . .	You have demonstrated initial compliance if . . .
3. Subject to NSPS for PM in 40 CFR 60.102a(b)(1)(ii), electing to meet the PM per coke burn-off limit.	PM emissions must not exceed 1.0 g/kg coke burn-off (1 lb/1000 lb coke burn-off).	You have already conducted a performance test to demonstrate initial compliance with the NSPS and the measured PM emission rate is less than or equal to 0.5 kg/1,000 kg (0.5 lb/1,000 lb) of coke burn-off in the catalyst regenerator. As part of the Notification of Compliance Status, you must certify that your vent meets the PM limit. You are not required to do another performance test to demonstrate initial compliance. As part of your Notification of Compliance Status, you certify that your BLD; CO_2, O_2, or CO monitor; or continuous opacity monitoring system meets the requirements in § 63.1572.
4. Subject to NSPS for PM in 40 CFR 60.102a(b)(1)(i), electing to meet the PM concentration limit.	If a PM CEMS is used, 0.020 grain per dry standard cubic feet (gr/dscf) corrected to 0 percent excess air.	You have already conducted a performance test to demonstrate initial compliance with the NSPS and the measured PM concentration is less than or equal to 0.020 grain per dry standard cubic feet (gr/dscf) corrected to 0 percent excess air. As part of the Notification of Compliance Status, you must certify that your vent meets the PM limit. You are not required to do another performance test to demonstrate initial compliance. As part of your Notification of Compliance Status, you certify that your PM CEMS meets the requirements in § 63.1572.
5. Subject to NSPS for PM in 40 CFR 60.102a(b)(1)(ii), electing to meet the PM concentration limit.	If a PM CEMS is used, 0.040 gr/dscf corrected to 0 percent excess air.	You have already conducted a performance test to demonstrate initial compliance with the NSPS and the measured PM concentration is less than or equal to 0.040 gr/dscf corrected to 0 percent excess air. As part of the Notification of Compliance Status, you must certify that your vent meets the PM limit. You are not required to do another performance test to demonstrate initial compliance. As part of your Notification of Compliance Status, you certify that your PM CEMS meets the requirements in § 63.1572.
6. Option 1: PM per coke burn-off limit not subject to the NSPS for PM in 40 CFR 60.102 or 40 CFR 60.120a(b)(1).	PM emissions must not exceed 1.0 gram per kilogram (g/kg) (1.0 lb/1,000 lb) of coke burn-off. Before [THE DATE 3 YEARS AFTER THE DATE OF PUBLICATION OF THE FINAL RULE AMENDMENTS IN THE **FEDERAL REGISTER**], PM emission must not exceed 1.0 g/kg (1.0 lb/1,000 lb) of coke burn-off in the catalyst regenerator; if the discharged gases pass through an incinerator or waste heat boiler in which you burn auxiliary or supplemental liquid or solid fossil fuel, the incremental rate of PM must not exceed 43.0 g/GJ (0.10 lb/million Btu) of heat input attributable to the liquid or solid fossil fuel; and the opacity of emissions must not exceed 30 percent, except for one 6-minute average opacity reading in any 1-hour period.	The average PM emission rate, measured using EPA Method 5, 5B, or 5F (for a unit without a wet scrubber) or 5 or 5B (for a unit with a wet scrubber), over the period of the initial performance test, is no higher than 1.0 g/kg coke burn-off (1.0 lb/1,000 lb) in the catalyst regenerator. The PM emission rate is calculated using Equations 1, 2, and 3 of § 63.1564. If you use a BLD; CO_2, O_2, CO monitor; or continuous opacity monitoring system, your performance evaluation shows the system meets the applicable requirements in § 63.1572.
7. Option 2: PM concentration limit, not subject to the NSPS for PM in 40 CFR 60.102 or in 40 CFR 60.102a(b)(1).	PM emissions must not exceed 0.040 gr/dscf corrected to 0 percent excess air.	The average PM concentration, measured using EPA Method 5, 5B, or 5F (for a unit without a wet scrubber) or Method 5 or 5B (for a unit with a wet scrubber), over the period of the initial performance test, is less than or equal to 0.040 gr/dscf corrected to 0 percent excess air. Your performance evaluation shows your PM CEMS meets the applicable requirements in § 63.1572.

TABLE 5 TO SUBPART UUU OF PART 63—INITIAL COMPLIANCE WITH METAL HAP EMISSION LIMITS FOR CATALYTIC CRACKING UNITS—Continued

For each new and existing catalytic cracking unit catalyst regenerator vent . . .	For the following emission limit . . .	You have demonstrated initial compliance if . . .
8. Option 3: not subject to the NSPS for PM.	Nickel (Ni) emissions from your catalyst regenerator vent must not exceed 13,000 mg/hr (0.029 lb/hr).	The average Ni emission rate, measured using Method 29 over the period of the initial performance test, is not more than 13,000 mg/hr (0.029 lb/hr). The Ni emission rate is calculated using Equation 5 of § 63.1564; and if you use a BLD; CO_2, O_2, or CO monitor; or continuous opacity monitoring system, your performance evaluation shows the system meets the applicable requirements in § 63.1572.
9. Option 4: Ni per coke burn-off limit not subject to the NSPS for PM.	Ni emissions from your catalyst regenerator vent must not exceed 1.0 mg/kg (0.001 lb/1,000 lb) of coke burn-off in the catalyst regenerator.	The average Ni emission rate, measured using Method 29 over the period of the initial performance test, is not more than 1.0 mg/kg (0.001 lb/1,000 lb) of coke burn-off in the catalyst regenerator. The Ni emission rate is calculated using Equation 8 of § 63.1564; and if you use a BLD; CO_2, O_2, or CO monitor; or continuous opacity monitoring system, your performance evaluation shows the system meets the applicable requirements in § 63.1572.

■ 57. Table 6 to subpart UUU of part 63 is revised to read as follows:

As stated in § 63.1564(c)(1), you shall meet each requirement in the following table that applies to you.

TABLE 6 TO SUBPART UUU OF PART 63—CONTINUOUS COMPLIANCE WITH METAL HAP EMISSION LIMITS FOR CATALYTIC CRACKING UNITS

For each new and existing catalytic cracking unit . . .	Subject to this emission limit for your catalyst regenerator vent . . .	You shall demonstrate continuous compliance by . . .
1. Subject to the NSPS for PM in 40 CFR 60.102.	a. PM emissions must not exceed 1.0 gram per kilogram (g/kg) (1.0 lb/1,000 lb) of coke burn-off. Before [THE DATE 18 MONTHS AFTER THE DATE OF PUBLICATION OF THE FINAL RULE AMENDMENTS IN THE **FEDERAL REGISTER**], if the discharged gases pass through an incinerator or waste heat boiler in which you burn auxiliary or supplemental liquid or solid fossil fuel, the incremental rate of PM must not exceed 43.0 g/GJ (0.10 lb/million Btu) of heat input attributable to the liquid or solid fossil fuel; and the opacity of emissions must not exceed 30 percent, except for one 6-minute average opacity reading in any 1-hour period.	i. Determining and recording each day the average coke burn-off rate (thousands of kilograms per hour) using Equation 1 in § 63.1564 and the hours of operation for each catalyst regenerator. ii. Maintaining PM emission rate below 1.0 g/kg (1.0 lb/1,000 lb) of coke burn-off. iii. Conducting a performance test before [THE DATE 18 MONTHS AFTER THE DATE OF PUBLICATION OF THE FINAL RULE AMENDMENTS IN THE **FEDERAL REGISTER**] and once every five years thereafter. iv. Collecting the applicable continuous parametric monitoring system data according to § 63.1572 and maintaining each rolling 3-hr average above or below (as applicable) the average determined during the performance test.

TABLE 6 TO SUBPART UUU OF PART 63—CONTINUOUS COMPLIANCE WITH METAL HAP EMISSION LIMITS FOR CATALYTIC CRACKING UNITS—Continued

For each new and existing catalytic cracking unit . . .	Subject to this emission limit for your catalyst regenerator vent . . .	You shall demonstrate continuous compliance by . . .
		v. Collecting the continuous opacity monitoring data for each catalyst regenerator vent according to § 63.1572 and maintaining each 6-minute average at or below the site-specific opacity determined during the performance test. Alternatively, before [THE DATE 18 MONTHS AFTER THE DATE OF PUBLICATION OF THE FINAL RULE AMENDMENTS IN THE **FEDERAL REGISTER**], collecting the continuous opacity monitoring data for each catalyst regenerator vent according to § 63.1572 and maintaining each 6-minute average at or below 30 percent, except that one 6-minute average during a 1-hour period can exceed 30 percent. vi. Before [THE DATE 18 MONTHS AFTER THE DATE OF PUBLICATION OF THE FINAL RULE AMENDMENTS IN THE **FEDERAL REGISTER**], if applicable, determining and recording each day the rate of combustion of liquid or solid fossil fuels (liters/hour or kilograms/hour) and the hours of operation during which liquid or solid fossil-fuels are combusted in the incinerator-waste heat boiler; if applicable, maintaining the incremental rate of PM at or below 43 g/GJ (0.10 lb/million Btu) of heat input attributable to the solid or liquid fossil fuel.
2. Subject to NSPS for PM in 40 CFR 60.102a(b)(1)(i), electing to meet the PM per coke burn-off limit..	PM emissions must not exceed 0.5 g/kg (0.5 lb PM/1,000 lb) of coke burn-off.	Determining and recording each day the average coke burn-off rate (thousands of kilograms per hour) using Equation 1 in § 63.1564 and the hours of operation for each catalyst regenerator; maintaining PM emission rate below 0.5 g/kg (0.5 lb PM/1,000 lb) of coke burn-off; conducting a performance test once every year; collecting the applicable continuous parametric monitoring system data according to § 63.1572 and maintaining each rolling 3-hr average above or below (as applicable) the average determined during the performance test; collecting the continuous opacity monitoring data for each regenerator vent according to § 63.1572 and maintaining each 6-minute average at or below the site-specific opacity determined during the performance test.
3. Subject to NSPS for PM in 40 CFR 60.102a(b)(1)(ii), electing to meet the PM per coke burn-off limit.	PM emissions must not exceed 1.0 g/kg coke burn-off (1 lb/1,000 lb coke burn-off).	Determining and recording each day the average coke burn-off rate (thousands of kilograms per hour) using Equation 1 in § 63.1564 and the hours of operation for each catalyst regenerator; maintaining PM emission rate below 1.0 g/kg (1.0 lb/1,000 lb) of coke burn-off; conducting a performance test once every year; collecting the applicable continuous parametric monitoring system data according to § 63.1572 and maintaining each rolling 3-hr average above or below (as applicable) the average determined during the performance test; collecting the continuous opacity monitoring data for each regenerator vent according to § 63.1572 and maintaining each 6-minute average at or below the site-specific opacity determined during the performance test.
4. Subject to NSPS for PM in 40 CFR 60.102a(b)(1)(i), electing to meet the PM concentration limit.	If a PM CEMS is used, 0.020 grain per dry standard cubic feet (gr/dscf) corrected to 0 percent excess air.	Maintaining PM concentration below 0.020 gr/dscf corrected to 0 percent excess air.
5. Subject to NSPS for PM in 40 CFR 60.102a(b)(1)(ii), electing to meet the PM concentration limit.	If a PM CEMS is used, 0.040 gr/dscf corrected to 0 percent excess air.	Maintaining PM concentration below 0.040 gr/dscf corrected to 0 percent excess air.

TABLE 6 TO SUBPART UUU OF PART 63—CONTINUOUS COMPLIANCE WITH METAL HAP EMISSION LIMITS FOR CATALYTIC CRACKING UNITS—Continued

For each new and existing catalytic cracking unit . . .	Subject to this emission limit for your catalyst regenerator vent . . .	You shall demonstrate continuous compliance by . . .
6. Option 1: PM per coke burn-off limit, not subject to the NSPS for PM in 40 CFR 60.102 or in 40 CFR 60.102a(b)(1).	See item 1 of this table	See item 1 of this table.
7. Option 2: PM concentration limit, not subject to the NSPS for PM in 40 CFR 60.102 or in 40 CFR 60.102a(b)(1).	PM emissions must not exceed 0.040 gr/dscf corrected to 0 percent excess air.	See item 5 of this table.
8. Option 3: Ni lb/hr limit, not subject to the NSPS for PM in 40 CFR 60.102 or in 40 CFR 60.102a(b)(1).	Ni emissions must not exceed 13,000 mg/hr (0.029 lb/hr).	Maintaining Ni emission rate below 13,000 mg/hr (0.029 lb/hr); conducting a performance test before [THE DATE 18 MONTHS AFTER THE DATE OF PUBLICATION OF THE FINAL RULE AMENDMENTS IN THE **FEDERAL REGISTER**] and once every five years thereafter; and collecting the applicable continuous parametric monitoring system data according to § 63.1572 and maintaining each rolling 3-hr average above or below (as applicable) the average determined during the performance test.
9. Option 4: Ni per coke burn-off limit, not subject to the NSPS for PM in 40 CFR 60.102 or in 40 CFR 60.102a(b)(1).	Ni emissions must not exceed 1.0 mg/kg (0.001 lb/1,000 lb) of coke burn-off in the catalyst regenerator.	Determining and recording each day the average coke burn-off rate (thousands of kilograms per hour) and the hours of operation for each catalyst regenerator by Equation 1 of § 63.1564 (you can use process data to determine the volumetric flow rate); and maintaining Ni emission rate below 1.0 mg/kg (0.001 lb/1,000 lb) of coke burn-off in the catalyst regenerator; conducting a performance test before [THE DATE 18 MONTHS AFTER THE DATE OF PUBLICATION OF THE FINAL RULE AMENDMENTS IN THE **FEDERAL REGISTER**] and once every five years thereafter; and collecting the applicable continuous parametric monitoring system data according to § 63.1572 and maintaining each rolling 3-hr average above or below (as applicable) the average determined during the performance test.

■ 58. Table 7 to subpart UUU of part 63 is revised to read as follows:

As stated in § 63.1564(c)(1), you shall meet each requirement in the following table that applies to you.

TABLE 7 TO SUBPART UUU OF PART 63—CONTINUOUS COMPLIANCE WITH OPERATING LIMITS FOR METAL HAP EMISSIONS FROM CATALYTIC CRACKING UNITS

For each new or existing catalytic cracking unit . . .	If you use . . .	For this operating limit . . .	You shall demonstrate continuous compliance by . . .
1. Subject to NSPS for PM in 40 CFR 60.102.	a. Continuous opacity monitoring system used to comply with 30 percent opacity limit..	Not applicable	Complying with Table 6 of this subpart.
	b. Continuous parametric monitoring systems—electrostatic precipitator.	The average gas flow rate entering or exiting the control device must not exceed the operating limit established during the performance test..	Collecting the hourly and 3-hr rolling average gas flow rate monitoring data according to § 63.1572; and maintaining the 3-hr rolling average gas flow rate at or below the limit established during the performance test.
		The average total power and secondary current to the control device must not fall below the operating limit established during the performance test.	Collecting the hourly and 3-hr rolling average total power and secondary current monitoring data according to § 63.1572; and maintaining the 3-hr rolling average total power and secondary current at or above the limit established during the performance test.

TABLE 7 TO SUBPART UUU OF PART 63—CONTINUOUS COMPLIANCE WITH OPERATING LIMITS FOR METAL HAP EMISSIONS FROM CATALYTIC CRACKING UNITS—Continued

For each new or existing catalytic cracking unit . . .	If you use . . .	For this operating limit . . .	You shall demonstrate continuous compliance by . . .
	c. Continuous parametric monitoring systems—wet scrubber.	The average pressure drop across the scrubber must not fall below the operating limit established during the performance test.	Collecting the hourly and 3-hr rolling average pressure drop monitoring data according to § 63.1572; and maintaining the 3-hr rolling average pressure drop at or above the limit established during the performance test.
		The average liquid-to-gas ratio must not fall below the operating limit established during the performance test.	Collecting the hourly and 3-hr rolling average gas flow rate and scrubber liquid flow rate monitoring data according to § 63.1572; determining and recording the 3-hr liquid-to-gas ratio; and maintaining the 3-hr rolling average liquid-to-gas ratio at or above the limit established during the performance test.
	d. BLD—fabric filter	Increases in relative particulate	Collecting and maintaining records of BLD system output; determining the cause of the alarm within 1 hour of the alarm; and alleviating the cause of the alarm within 3 hours by corrective action.
	e. Continuous opacity monitoring system, used for site-specific opacity limit—Cyclone or electrostatic precipitator.	The average opacity must not exceed the opacity established during the performance test.	Collecting the hourly and 3-hr rolling average opacity monitoring data according to § 63.1572; maintaining the 3-hr rolling average opacity at or above the limit established during the performance test.
2. Subject to NSPS for PM in 40 CFR 60.102a(b)(1)(ii), electing to meet the PM per coke burn-off limit.	Any	Any	See items 1.b, 1.c, 1.d, and 1.e of this table.
3. Subject to NSPS for PM in 40 CFR 60.102a(b)(1), electing to meet the PM concentration limit.	PM CEMS	Not applicable.	Complying with Table 6 of this subpart.
4. Option 1: PM per coke burn-off limit, not subject to the NSPS for PM in 40 CFR 60.102 or in 40 CFR 60.102a(b)(1).	a. Continuous opacity monitoring system.	The opacity of emissions from your catalyst regenerator vent must not exceed the site-specific opacity operating limit established during the performance test.	Collecting the 3-hr rolling average continuous opacity monitoring system data according to § 63.1572; and maintaining the 3-hr rolling average opacity at or below the site-specific limit. Alternatively, before [THE DATE 18 MONTHS AFTER THE DATE OF PUBLICATION OF THE FINAL RULE AMENDMENTS IN THE **FEDERAL REGISTER**], collecting the hourly average continuous opacity monitoring system data according to § 63.1572; and maintaining the hourly average opacity at or below the site-specific limit.

TABLE 7 TO SUBPART UUU OF PART 63—CONTINUOUS COMPLIANCE WITH OPERATING LIMITS FOR METAL HAP EMISSIONS FROM CATALYTIC CRACKING UNITS—Continued

For each new or existing catalytic cracking unit . . .	If you use . . .	For this operating limit . . .	You shall demonstrate continuous compliance by . . .
	b. Continuous parameter monitoring systems—electrostatic precipitator.	i. The average gas flow rate entering or exiting the control device must not exceed the operating limit established during the performance test.	Collecting the hourly and 3-hr rolling average gas flow rate monitoring data according to § 63.1572; and maintaining the 3-hr rolling average gas flow rate at or below the limit established during the performance test. Alternatively, before [THE DATE 18 MONTHS AFTER THE DATE OF PUBLICATION OF THE FINAL RULE AMENDMENTS IN THE **FEDERAL REGISTER**], collecting the hourly and daily average gas flow rate monitoring data according to § 63.1572;[1] and maintaining the daily average gas flow rate at or below the limit established during the performance test.
		ii. The average voltage and secondary current (or total power input) to the control device must not fall below the operating limit established during the performance test..	Collecting the hourly and 3-hr rolling average total power and secondary current monitoring data according to § 63.1572; and maintaining the 3-hr rolling average total power and secondary current at or above the limit established during the performance test. Alternatively, before [THE DATE 18 MONTHS AFTER THE DATE OF PUBLICATION OF THE FINAL RULE AMENDMENTS IN THE **FEDERAL REGISTER**], collecting the hourly and daily average voltage and secondary current (or total power input) monitoring data according to § 63.1572; and maintaining the daily average voltage and secondary current (or total power input) at or above the limit established during the performance test.
	c. Continuous parameter monitoring systems—wet scrubber.	i. The average pressure drop across the scrubber must not fall below the operating limit established during the performance test.	Collecting the hourly and 3-hr rolling average pressure drop monitoring data according to § 63.1572; and maintaining the 3-hr rolling average pressure drop at or above the limit established during the performance test. Alternatively, before [THE DATE 18 MONTHS AFTER THE DATE OF PUBLICATION OF THE FINAL RULE AMENDMENTS IN THE **FEDERAL REGISTER**], collecting the hourly and daily average pressure drop monitoring data according to § 63.1572; and maintaining the daily average pressure drop above the limit established during the performance test.

TABLE 7 TO SUBPART UUU OF PART 63—CONTINUOUS COMPLIANCE WITH OPERATING LIMITS FOR METAL HAP EMISSIONS FROM CATALYTIC CRACKING UNITS—Continued

For each new or existing catalytic cracking unit . . .	If you use . . .	For this operating limit . . .	You shall demonstrate continuous compliance by . . .
		ii. The average liquid-to-gas ratio must not fall below the operating limit established during the performance test.	Collecting the hourly and 3-hr rolling average gas flow rate and scrubber liquid flow rate monitoring data according to § 63.1572; determining and recording the 3-hr liquid-to-gas ratio; and maintaining the 3-hr rolling average liquid-to-gas ratio at or above the limit established during the performance test. Alternatively, before [THE DATE 18 MONTHS AFTER THE DATE OF PUBLICATION OF THE FINAL RULE AMENDMENTS IN THE **FEDERAL REGISTER**], collecting the hourly average gas flow rate and water (or scrubbing liquid) flow rate monitoring data according to § 63.1572;[1] determining and recording the hourly average liquid-to-gas ratio; determining and recording the daily average liquid-to-gas ratio; and maintaining the daily average liquid-to-gas ratio above the limit established during the performance test.
	d. BLD—fabric filter	Increases in relative particulate	Collecting and maintaining records of BLD system output; determining the cause of the alarm within 1 hour of the alarm; and alleviating the cause of the alarm within 3 hours by corrective action.
	e. Continuous opacity monitoring system, used for site-specific opacity limit—Cyclone or electrostatic precipitator.	The average opacity must not exceed the opacity established during the performance test.	Collecting the hourly and 3-hr rolling average opacity monitoring data according to § 63.1572; maintaining the 3-hr rolling average opacity at or above the limit established during the performance test.
5. Option 2: PM concentration limit, not subject to the NSPS for PM in 40 CFR 60.102 or in 40 CFR 60.102a(b)(1)..	PM CEMS	Not applicable	Complying with Table 6 of this subpart.
6. Option 3: Ni lb/hr limit not subject to the NSPS for PM in 40 CFR 60.102.	a. Continuous opacity monitoring system.	i. The daily average Ni operating value must not exceed the site-specific Ni operating limit established during the performance test.	(1) Collecting the hourly average continuous opacity monitoring system data according to § 63.1572; determining and recording equilibrium catalyst Ni concentration at least once a week;[2] collecting the hourly average gas flow rate monitoring data according to § 63.1572;[1] and determining and recording the hourly average Ni operating value using Equation 11 of § 63.1564.

TABLE 7 TO SUBPART UUU OF PART 63—CONTINUOUS COMPLIANCE WITH OPERATING LIMITS FOR METAL HAP EMISSIONS FROM CATALYTIC CRACKING UNITS—Continued

For each new or existing catalytic cracking unit . . .	If you use . . .	For this operating limit . . .	You shall demonstrate continuous compliance by . . .
			(2) Determining and recording the 3-hour rolling average Ni operating value and maintaining the 3-hour rolling average Ni operating value below the site-specific Ni operating limit established during the performance test. Alternatively, before [THE DATE 18 MONTHS AFTER THE DATE OF PUBLICATION OF THE FINAL RULE AMENDMENTS IN THE **FEDERAL REGISTER**], determining and recording the daily average Ni operating value and maintaining the daily average Ni operating value below the site-specific Ni operating limit established during the performance test.
	b. Continuous parameter monitoring systems—electrostatic precipitator.	i. The average gas flow rate entering or exiting the control device must not exceed the operating limit established during the performance test.	See item 4.b.i of this table.
		ii. The average voltage and secondary current (or total power input) must not fall below the level established in the performance test.	See item 4.b.ii of this table.
		iii. The monthly rolling average of the equilibrium catalyst Ni concentration must not exceed the level established during the performance test.	Determining and recording the equilibrium catalyst Ni concentration at least once a week;[2] determining and recording the monthly rolling average of the equilibrium catalyst Ni concentration once each week using the weekly or most recent value; and maintaining the monthly rolling average below the limit established in the performance test.
	c. Continuous parameter monitoring systems—wet scrubber.	i. The average pressure drop must not fall below the operating limit established in the performance test.	See item 4.c.i of this table.
		ii. The average liquid-to-gas ratio must not fall below the operating limit established during the performance test.	See item 4.c.ii of this table.
		iii. The monthly rolling average equilibrium catalyst Ni concentration must not exceed the level established during the performance test.	Determining and recording the equilibrium catalyst Ni concentration at least once a week;[2] determining and recording the monthly rolling average of equilibrium catalyst Ni concentration once each week using the weekly or most recent value; and maintaining the monthly rolling average below the limit established in the performance test.
	d. BLD—fabric filter	Increases in relative particulate	See item 4.d of this table.
	e. Continuous opacity monitoring system, used for site-specific opacity limit—Cyclone or electrostatic precipitator.	The average opacity must not exceed the opacity established during the performance test.	See item 4.e of this table.

TABLE 7 TO SUBPART UUU OF PART 63—CONTINUOUS COMPLIANCE WITH OPERATING LIMITS FOR METAL HAP EMISSIONS FROM CATALYTIC CRACKING UNITS—Continued

For each new or existing catalytic cracking unit . . .	If you use . . .	For this operating limit . . .	You shall demonstrate continuous compliance by . . .
7. Option 4: Ni per coke burn-off limit not subject to the NSPS for PM in 40 CFR 60.102..	a. Continuous opacity monitoring system..	i. The daily average Ni operating value must not exceed the site-specific Ni operating limit established during the performance test.	(1) Collecting the hourly average continuous opacity monitoring system data according to § 63.1572; collecting the hourly average gas flow rate monitoring data according to § 63.1572; [1] determining and recording equilibrium catalyst Ni concentration at least once a week; [2] and determining and recording the hourly average Ni operating value using Equation 12 of § 63.1564. (2) Determining and recording the 3-hour rolling average Ni operating value and maintaining the 3-hour rolling average Ni operating value below the site-specific Ni operating limit established during the performance test. Alternatively, before [THE DATE 18 MONTHS AFTER THE DATE OF PUBLICATION OF THE FINAL RULE AMENDMENTS IN THE **FEDERAL REGISTER**], determining and recording the daily average Ni operating value and maintaining the daily average Ni operating value below the site-specific Ni operating limit established during the performance test.
	b. Continuous parameter monitoring systems—electrostatic precipitator.	i. The daily average gas flow rate to the control device must not exceed the level established in the performance test.	See item 4.b.i of this table.
		ii. The daily average voltage and secondary current (or total power input) must not fall below the level established in the performance test.	See item 4.b.ii of this table.
		iii. The monthly rolling average equilibrium catalyst Ni concentration must not exceed the level established during the performance test.	See item 6.b.iii of this table.
	c. Continuous parameter monitoring systems—wet scrubber.	i. The daily average pressure drop must not fall below the operating limit established in the performance test.	See item 4.c.i of this table.
	.....	ii. The daily average liquid-to-gas ratio must not fall below the operating limit established during the performance test.	See item 4.c.ii of this table.
	.....	iii. The monthly rolling average equilibrium catalyst Ni concentration must not exceed the level established during the performance test.	See item 6.c.iii of this table.
	d. BLD—fabric filter	Increases in relative particulate	See item 4.d of this table.
	e. Continuous opacity monitoring system, used for site-specific opacity limit—Cyclone or electrostatic precipitator.	The average opacity must not exceed the opacity established during the performance test.	See item 4.e of this table.

[1] If applicable, you can use the alternative in § 63.1573(a)(1) for gas flow rate instead of a continuous parameter monitoring system if you used the alternative method in the initial performance test.

[2] The equilibrium catalyst Ni concentration must be measured by the procedure, Determination of Metal Concentration on Catalyst Particles (Instrumental Analyzer Procedure) in Appendix A to this subpart; or by EPA Method 6010B, Inductively Coupled Plasma-Atomic Emission Spectrometry, EPA Method 6020, Inductively Coupled Plasma-Mass Spectrometry, EPA Method 7520, Nickel Atomic Absorption, Direct Aspiration, or EPA Method 7521, Nickel Atomic Absorption, Direct Aspiration; or by an alternative to EPA Method 6010B, 6020, 7520, or 7521 satisfactory to the Administrator. The EPA Methods 6010B, 6020, 7520, and 7521 are included in ''Test Methods for Evaluating Solid Waste, Physical/Chemical Methods,'' EPA Publication SW–846, Revision 5 (April 1998). The SW–846 and Updates (document number 955–001–00000–1) are available for purchase from the Superintendent of Documents, U.S. Government Printing Office, Washington, DC 20402, (202) 512–1800; and from the National Technical Information Services (NTIS), 5285 Port Royal Road, Springfield, VA 22161, (703) 487–4650. Copies may be inspected at the EPA Docket Center, William Jefferson Clinton (WJC) West Building (Air Docket), Room 3334, 1301 Constitution Ave. NW., Washington, DC; or at the Office of the Federal Register, 800 North Capitol Street NW., Suite 700, Washington, DC. These methods are also available at *http://www.epa.gov/epaoswer/hazwaste/test/main.htm.*

■ 59. Table 8 to subpart UUU of part 63 is amended by revising the entry for item 2 to read as follows:

* * * * *

TABLE 8 TO SUBPART UUU OF PART 63—ORGANIC HAP EMISSION LIMITS FOR CATALYTIC CRACKING UNITS

For each new and existing catalytic cracking unit . . .	You shall meet the following emission limit for each catalyst regenerator vent . . .
* *	* * * * *
2. Not subject to the NSPS for CO in 40 CFR 60.103.	a. CO emissions from the catalyst regenerator vent or CO boiler serving the catalytic cracking unit must not exceed 500 ppmv (dry basis). b. If you use a flare to meet the CO limit, then on and after [THE DATE 3 YEARS AFTER THE DATE OF PUBLICATION OF THE FINAL RULE AMENDMENTS IN THE **FEDERAL REGISTER**], the flare must meet the requirements of § 63.670. Prior to [THE DATE 3 YEARS AFTER THE DATE OF PUBLICATION OF THE FINAL RULE AMENDMENTS IN THE **FEDERAL REGISTER**], the flare must meet the requirements for control devices in § 63.11(b) and visible emissions must not exceed a total of 5 minutes during any 2 consecutive hours, or the flare must meet the requirements of § 63.670.

■ 60. Table 9 to subpart UUU of part 63 is amended by revising the entry for item 2 to read as follows:

* * * * *

TABLE 9 TO SUBPART UUU OF PART 63—OPERATING LIMITS FOR ORGANIC HAP EMISSIONS FROM CATALYTIC CRACKING UNITS

For each new or existing catalytic cracking unit . . .	For this type of continuous monitoring system . . .	For this type of control device . . .	You shall meet this operating limit . . .
* *	* *	*	* *
2. Not subject to the NSPS for CO in 40 CFR 60.103.	a. Continuous emission monitoring system.	Not applicable	Not applicable.
	b. Continuous parameter monitoring systems.	i. Thermal incinerator	Maintain the daily average combustion zone temperature above the limit established during the performance test; and maintain the daily average oxygen concentration in the vent stream (percent, dry basis) above the limit established during the performance test.
		ii. Boiler or process heater with a design heat input capacity under 44 MW or a boiler or process heater in which all vent streams are not introduced into the flame zone.	Maintain the daily average combustion zone temperature above the limit established in the performance test.

TABLE 9 TO SUBPART UUU OF PART 63—OPERATING LIMITS FOR ORGANIC HAP EMISSIONS FROM CATALYTIC CRACKING UNITS—Continued

For each new or existing catalytic cracking unit . . .	For this type of continuous monitoring system . . .	For this type of control device . . .	You shall meet this operating limit . . .
		iii. Flare	On and after [THE DATE 3 YEARS AFTER THE DATE OF PUBLICATION OF THE FINAL RULE AMENDMENTS IN THE **FEDERAL REGISTER**], the flare must meet the requirements of § 63.670. Prior to [THE DATE 3 YEARS AFTER THE DATE OF PUBLICATION OF THE FINAL RULE AMENDMENTS IN THE **FEDERAL REGISTER**], the flare pilot light must be present at all times and the flare must be operating at all times that emissions may be vented to it, or the flare must meet the requirements of § 63.670.

■ 61. Table 10 to subpart UUU of part 63 is amended by revising the entry for item 2 to read as follows:

* * * * *

TABLE 10 TO SUBPART UUU OF PART 63—CONTINUOUS MONITORING SYSTEMS FOR ORGANIC HAP EMISSIONS FROM CATALYTIC CRACKING UNITS

For each new or existing catalytic cracking unit . . .	And you use this type of control device for your vent . . .	You shall install, operate, and maintain this type of continuous monitoring system . . .
* *	* * *	* *
2. Not subject to the NSPS for CO in 40 CFR 60.103.	a. Thermal incinerator	Continuous emission monitoring system to measure and record the concentration by volume (dry basis) of CO emissions from each catalyst regenerator vent; or continuous parameter monitoring systems to measure and record the combustion zone temperature and oxygen content (percent, dry basis) in the incinerator vent stream.
	b. Process heater or boiler with a design heat input capacity under 44 MW or process heater or boiler in which all vent streams are not introduced into the flame zone.	Continuous emission monitoring system to measure and record the concentration by volume (dry basis) of CO emissions from each catalyst regenerator vent; or continuous parameter monitoring systems to measure and record the combustion zone temperature.
	c. Flare	On and after [THE DATE 3 YEARS AFTER THE DATE OF PUBLICATION OF THE FINAL RULE AMENDMENTS IN THE **FEDERAL REGISTER**], the monitoring systems required in §§ 63.670 and 63.671. Prior to [THE DATE 3 YEARS AFTER THE DATE OF PUBLICATION OF THE FINAL RULE AMENDMENTS IN THE **FEDERAL REGISTER**], monitoring device such as a thermocouple, an ultraviolet beam sensor, or infrared sensor to continuously detect the presence of a pilot flame, or the monitoring systems required in §§ 63.670 and 63.671.
	d. No control device	Continuous emission monitoring system to measure and record the concentration by volume (dry basis) of CO emissions from each catalyst regenerator vent.

■ 62. Table 11 to subpart UUU of part 63 is amended by revising revising the entry for item 3 to read as follows:

* * * * *

TABLE 11 TO SUBPART UUU OF PART 63—REQUIREMENTS FOR PERFORMANCE TESTS FOR ORGANIC HAP EMISSIONS FROM CATALYTIC CRACKING UNITS NOT SUBJECT TO NEW SOURCE PERFORMANCE STANDARD (NSPS) FOR CARBON MONOXIDE (CO)

For . . .	You must . . .	Using . . .	According to these requirements . . .
* *	* *	*	* *
3. Each catalytic cracking unit catalyst regenerator vent if you use continuous parameter monitoring systems.	a. Measure the CO concentration (dry basis) of emissions exiting the control device.	Method 10, 10A, or 10B in appendix A to part 60 of this chapter, as applicable.	
	b. Establish each operating limit in Table 9 of this subpart that applies to you.	Data from the continuous parameter monitoring systems.	
	c. Thermal incinerator combustion zone temperature.	Data from the continuous parameter monitoring systems.	Collect temperature monitoring data every 15 minutes during the entire period of the CO initial performance test; and determine and record the minimum hourly average combustion zone temperature from all the readings.
	d. Thermal incinerator: oxygen, content (percent, dry basis) in the incinerator vent stream.	Data from the continuous parameter monitoring systems.	Collect oxygen concentration (percent, dry basis) monitoring data every 15 minutes during the entire period of the CO initial performance test; and determine and record the minimum hourly average percent excess oxygen concentration from all the readings.
	e. If you use a process heater or boiler with a design heat input capacity under 44 MW or process heater or boiler in which all vent streams are not introduced into the flame zone, establish operating limit for combustion zone temperature.	Data from the continuous parameter monitoring systems.	Collect the temperature monitoring data every 15 minutes during the entire period of the CO initial performance test; and determine and record the minimum hourly average combustion zone temperature from all the readings.
	f. If you use a flare, conduct visible emission observations.	Method 22 (40 CFR part 60, appendix A).	On and after [THE DATE 3 YEARS AFTER THE DATE OF PUBLICATION OF THE FINAL RULE AMENDMENTS IN THE **FEDERAL REGISTER**], meet the requirements of § 63.670. Prior to [THE DATE 3 YEARS AFTER THE DATE OF PUBLICATION OF THE FINAL RULE AMENDMENTS IN THE **FEDERAL REGISTER**], maintain a 2-hour observation period; and record the presence of a flame at the pilot light over the full period of the test or meet the requirements of § 63.670.

TABLE 11 TO SUBPART UUU OF PART 63—REQUIREMENTS FOR PERFORMANCE TESTS FOR ORGANIC HAP EMISSIONS FROM CATALYTIC CRACKING UNITS NOT SUBJECT TO NEW SOURCE PERFORMANCE STANDARD (NSPS) FOR CARBON MONOXIDE (CO)—Continued

For . . .	You must . . .	Using . . .	According to these requirements . . .
	g. If you use a flare, determine that the flare meets the requirements for net heating value of the gas being combusted and exit velocity.	40 CFR 63.11(b)(6) through (8)	On and after [THE DATE 3 YEARS AFTER THE DATE OF PUBLICATION OF THE FINAL RULE AMENDMENTS IN THE **FEDERAL REGISTER**], the flare must meet the requirements of § 63.670. Prior to [THE DATE 3 YEARS AFTER THE DATE OF PUBLICATION OF THE FINAL RULE AMENDMENTS IN THE **FEDERAL REGISTER**], the flare must meet the control device requirements in § 63.11(b) or the requirements of § 63.670.

■ 63. Table 12 to subpart UUU of part 63 is amended by revising the entry for item 2 to read as follows:

* * * * *

TABLE 12 TO SUBPART UUU OF PART 63—INITIAL COMPLIANCE WITH ORGANIC HAP EMISSION LIMITS FOR CATALYTIC CRACKING UNITS

For each new and existing catalytic cracking unit . . .	For the following emission limit . . .	You have demonstrated initial compliance if . . .
* *	* * *	* *
2. Not subject to the NSPS for CO in 40 CFR 60.103.	a. CO emissions from your catalyst regenerator vent or CO boiler serving the catalytic cracking unit must not exceed 500 ppmv (dry basis).	i. If you use a continuous parameter monitoring system, the average CO emissions measured by Method 10 over the period of the initial performance test are less than or equal to 500 ppmv (dry basis). ii. If you use a continuous emission monitoring system, the hourly average CO emissions over the 24-hour period for the initial performance test are not more than 500 ppmv (dry basis); and your performance evaluation shows your continuous emission monitoring system meets the applicable requirements in § 63.1572.
	b. If you use a flare, visible emissions must not exceed a total of 5 minutes during any 2 operating hours.	On and after [THE DATE 3 YEARS AFTER THE DATE OF PUBLICATION OF THE FINAL RULE AMENDMENTS IN THE **FEDERAL REGISTER**], the flare meets the requirements of § 63.670. Prior to [THE DATE 3 YEARS AFTER THE DATE OF PUBLICATION OF THE FINAL RULE AMENDMENTS IN THE **FEDERAL REGISTER**], visible emissions, measured by Method 22 during the 2-hour observation period during the initial performance test, are no higher than 5 minutes, or the flare meets the requirements of § 63.670.

■ 64. Table 13 to subpart UUU of part 63 is amended by revising the entry for item 2 to read as follows:

* * * * *

TABLE 13 TO SUBPART UUU OF PART 63—CONTINUOUS COMPLIANCE WITH ORGANIC HAP EMISSION LIMITS FOR CATALYTIC CRACKING UNITS

For each new and existing catalytic cracking unit . . .	Subject to this emission limit for your catalyst regenerator vent . . .	If you must . .	You shall demonstrate continuous compliance by . . .
* *	* *	*	* *
2. Not subject to the NSPS for CO in 40 CFR 60.103.	i. CO emissions from your catalyst regenerator vent or CO boiler serving the catalytic cracking unit must not exceed 500 ppmv (dry basis).	Continuous emission monitoring system.	Same as above.
	ii. CO emissions from your catalyst regenerator vent or CO boiler serving the catalytic cracking unit must not exceed 500 ppmv (dry basis).	Continuous parameter monitoring system.	Maintaining the hourly average CO concentration below 500 ppmv (dry basis).
	iii. Visible emissions from a flare must not exceed a total of 5 minutes during any 2-hour period.	Control device-flare	On and after [THE DATE 3 YEARS AFTER THE DATE OF PUBLICATION OF THE FINAL RULE AMENDMENTS IN THE **FEDERAL REGISTER**], meeting the requirements of § 63.670. Prior to [THE DATE 3 YEARS AFTER THE DATE OF PUBLICATION OF THE FINAL RULE AMENDMENTS IN THE **FEDERAL REGISTER**], maintaining visible emissions below a total of 5 minutes during any 2-hour operating period, or meeting the requirements of § 63.670.

■ 65. Table 14 to subpart UUU of part 63 is amended by revising the entry for item 2 to read as follows:

* * * * *

TABLE 14 TO SUBPART UUU OF PART 63—CONTINUOUS COMPLIANCE WITH OPERATING LIMITS FOR ORGANIC HAP EMISSIONS FROM CATALYTIC CRACKING UNITS

For each new existing catalytic cracking unit . . .	If you use . . .	For this operating limit . . .	You shall demonstrate continuous compliance by . . .
*	* *	* *	* *
2. Not subject to the NSPS for CO in 40 CFR 60.103.	a. Continuous emission monitoring system.	Not applicable	Complying with Table 13 of this subpart.
	b. Continuous parameter monitoring systems—thermal incinerator.	i. The daily average combustion zone temperature must not fall below the level established during the performance test.	Collecting the hourly and daily average temperature monitoring data according to § 63.1572; and maintaining the daily average combustion zone temperature above the limit established during the performance test.
		ii. The daily average oxygen concentration in the vent stream (percent, dry basis) must not fall below the level established during the performance test.	Collecting the hourly and daily average oxygen concentration monitoring data according to § 63.1572; and maintaining the daily average oxygen concentration above the limit established during the performance test.

TABLE 14 TO SUBPART UUU OF PART 63—CONTINUOUS COMPLIANCE WITH OPERATING LIMITS FOR ORGANIC HAP EMISSIONS FROM CATALYTIC CRACKING UNITS—Continued

For each new existing catalytic cracking unit . . .	If you use . . .	For this operating limit . . .	You shall demonstrate continuous compliance by . . .
	c. Continuous parameter monitoring systems—boiler or process heater with a design heat input capacity under 44 MW or boiler or process heater in which all vent streams are not introduced into the flame zone.	The daily combustion zone temperature must not fall below the level established in the performance test.	Collecting the average hourly and daily temperature monitoring data according to § 63.1572; and maintaining the daily average combustion zone temperature above the limit established during the performance test.
	d. Continuous parameter monitoring system—flare.	The flare pilot light must be present at all times and the flare must be operating at all times that emissions may be vented to it.	On and after [THE DATE 3 YEARS AFTER THE DATE OF PUBLICATION OF THE FINAL RULE AMENDMENTS IN THE **FEDERAL REGISTER**], meeting the requirements of § 63.670. Prior to [THE DATE 3 YEARS AFTER THE DATE OF PUBLICATION OF THE FINAL RULE AMENDMENTS IN THE **FEDERAL REGISTER**], collecting the flare monitoring data according to § 63.1572 and recording for each 1-hour period whether the monitor was continuously operating and the pilot light was continuously present during each 1-hour period, or meeting the requirements of § 63.670.

■ 66. Table 15 to subpart UUU of part 63 is amended by revising the entry for item 1 to read as follows:

* * * * *

TABLE 15 TO SUBPART UUU OF PART 63—ORGANIC HAP EMISSION LIMITS FOR CATALYTIC REFORMING UNITS

For each applicable process vent for a new or existing catalytic reforming unit . . .	You shall meet this emission limit during initial catalyst depressuring and catalyst purging operations . . .
1. Option 1	On and after [THE DATE 3 YEARS AFTER THE DATE OF PUBLICATION OF THE FINAL RULE AMENDMENTS IN THE **FEDERAL REGISTER**], vent emissions to a flare that meets the requirements of § 63.670. Prior to [THE DATE 3 YEARS AFTER THE DATE OF PUBLICATION OF THE FINAL RULE AMENDMENTS IN THE **FEDERAL REGISTER**], vent emissions to a flare that meets the requirements for control devices in § 63.11(b) and visible emissions from a flare must not exceed a total of 5 minutes during any 2-hour operating period, or vent emissions to a flare that meets the requirements of § 63.670.
* * * * * * *	

■ 67. Table 16 to subpart UUU of part 63 is amended by revising the entry for item 1 to read as follows:

* * * * *

TABLE 16 TO SUBPART UUU OF PART 63—OPERATING LIMITS FOR ORGANIC HAP EMISSIONS FROM CATALYTIC REFORMING UNITS

For each new or existing catalytic reforming unit . . .	For this type of control device . . .	You shall meet this operating limit during initial catalyst depressuring and purging operations . . .
1. Option 1: vent to flare	Flare	On and after [THE DATE 3 YEARS AFTER THE DATE OF PUBLICATION OF THE FINAL RULE AMENDMENTS IN THE **FEDERAL REGISTER**], the flare must meet the requirements of § 63.670. Prior to [THE DATE 3 YEARS AFTER THE DATE OF PUBLICATION OF THE FINAL RULE AMENDMENTS IN THE **FEDERAL REGISTER**], the flare pilot light must be present at all times and the flare must be operating at all times that emissions may be vented to it, or the flare must meet the requirements of § 63.670.
* * * * * * *		

■ 68. Table 17 to subpart UUU of part 63 is amended by revising the entry for item 1 to read as follows:

* * * * *

TABLE 17 TO SUBPART UUU OF PART 63—CONTINUOUS MONITORING SYSTEMS FOR ORGANIC HAP EMISSIONS FROM CATALYTIC REFORMING UNITS

For each applicable process vent for a new or existing catalytic reforming unit . . .	If you use this type of control device . . .	You shall install and operate this type of continuous monitoring system . . .
1. Option 1: vent to a flare	Flare	On and after [THE DATE 3 YEARS AFTER THE DATE OF PUBLICATION OF THE FINAL RULE AMENDMENTS IN THE **FEDERAL REGISTER**], the monitoring systems required in §§ 63.670 and 63.671. Prior to [THE DATE 3 YEARS AFTER THE DATE OF PUBLICATION OF THE FINAL RULE AMENDMENTS IN THE **FEDERAL REGISTER**], monitoring device such as a thermocouple, an ultraviolet beam sensor, or infrared sensor to continuously detect the presence of a pilot flame, or the monitoring systems required in §§ 63.670 and 63.671.
* * * * * * *		

■ 69. Table 18 to subpart UUU of part 63 is amended by:

■ a. Revising the column headings and

■ b. Revising the entry for item 1.

The revisions read as follows:

* * * * *

TABLE 18 TO SUBPART UUU OF PART 63—REQUIREMENTS FOR PERFORMANCE TESTS FOR ORGANIC HAP EMISSIONS FROM CATALYTIC REFORMING UNITS

For each new or existing catalytic reforming unit . . .	You must . . .	Using . . .	According to these requirements . . .
1. Option 1: Vent to a flare.	a. Conduct visible emission observations.	Method 22 (40 CFR part 60, appendix A).	On and after [THE DATE 3 YEARS AFTER THE DATE OF PUBLICATION OF THE FINAL RULE AMENDMENTS IN THE **FEDERAL REGISTER**], the flare must meet the requirements of § 63.670. Prior to [THE DATE 3 YEARS AFTER THE DATE OF PUBLICATION OF THE FINAL RULE AMENDMENTS IN THE **FEDERAL REGISTER**],2-hour observation period. Record the presence of a flame at the pilot light over the full period of the test, or the requirements of § 63.670.

TABLE 18 TO SUBPART UUU OF PART 63—REQUIREMENTS FOR PERFORMANCE TESTS FOR ORGANIC HAP EMISSIONS FROM CATALYTIC REFORMING UNITS—Continued

For each new or existing catalytic reforming unit . . .	You must . . .	Using . . .	According to these requirements . . .
	b. Determine that the flare meets the requirements for net heating value of the gas being combusted and exit velocity.	40 CFR 63.11(b)(6) through (8)	On and after [THE DATE 3 YEARS AFTER THE DATE OF PUBLICATION OF THE FINAL RULE AMENDMENTS IN THE **FEDERAL REGISTER**], the flare must meet the requirements of § 63.670. Prior to [THE DATE 3 YEARS AFTER THE DATE OF PUBLICATION OF THE FINAL RULE AMENDMENTS IN THE **FEDERAL REGISTER**], the flare must meet the control device requirements in § 63.11(b) or the requirements of § 63.670.
*	*	*	*	*	*	*

■ 70. Table 19 to subpart UUU of part 63 is amended by revising the entry for item 1 to read as follows:

* * * * *

TABLE 19 TO SUBPART UUU OF PART 63—INITIAL COMPLIANCE WITH ORGANIC HAP EMISSION LIMITS FOR CATALYTIC REFORMING UNITS

For each applicable process vent for a new or existing catalytic reforming unit . . .	For the following emission limit . . .	You have demonstrated initial compliance if . . .
Option 1	Visible emissions from a flare must not exceed a total of 5 minutes during any 2 consecutive hours.	On and after [THE DATE 3 YEARS AFTER THE DATE OF PUBLICATION OF THE FINAL RULE AMENDMENTS IN THE **FEDERAL REGISTER**], the flare meets the requirements of § 63.670. Prior to [THE DATE 3 YEARS AFTER THE DATE OF PUBLICATION OF THE FINAL RULE AMENDMENTS IN THE **FEDERAL REGISTER**], visible emissions, measured using Method 22 over the 2-hour observation period of the performance test, do not exceed a total of 5 minutes, or the flare meets the requirements of § 63.670.
*	*	*	*	*	*	*

■ 71. Table 20 to subpart UUU of part 63 is amended by revising the entry for item 1 to read as follows:

* * * * *

TABLE 20 TO SUBPART UUU OF PART 63—CONTINUOUS COMPLIANCE WITH ORGANIC HAP EMISSION LIMITS FOR CATALYTIC REFORMING UNITS

For each applicable process vent for a new or existing catalytic reforming unit . . .	For this emission limit . . .	You shall demonstrate continuous compliance during initial catalyst depressuring and catalyst purging operations by . . .
1. Option 1	Vent emissions from your process vent to a flare.	On and after [THE DATE 3 YEARS AFTER THE DATE OF PUBLICATION OF THE FINAL RULE AMENDMENTS IN THE **FEDERAL REGISTER**], meeting the requirements of § 63.670. Prior to [THE DATE 3 YEARS AFTER THE DATE OF PUBLICATION OF THE FINAL RULE AMENDMENTS IN THE **FEDERAL REGISTER**], maintaining visible emissions from a flare below a total of 5 minutes during any 2 consecutive hours, or meeting the requirements of § 63.670.

TABLE 20 TO SUBPART UUU OF PART 63—CONTINUOUS COMPLIANCE WITH ORGANIC HAP EMISSION LIMITS FOR CATALYTIC REFORMING UNITS—Continued

For each applicable process vent for a new or existing catalytic reforming unit . . .	For this emission limit . . .	You shall demonstrate continuous compliance during initial catalyst depressuring and catalyst purging operations by . . .
* * * * * * *		

■ 72. Table 21 to subpart UUU of part 63 is amended by revising the entry for item 1 to read as follows:

* * * * *

TABLE 21 TO SUBPART UUU OF PART 63—CONTINUOUS COMPLIANCE WITH OPERATING LIMITS FOR ORGANIC HAP EMISSIONS FROM CATALYTIC REFORMING UNITS

For each applicable process vent for a new or existing catalytic reforming unit . . .	If you use . . .	For this operating limit . . .	You shall demonstrate continuous compliance during initial catalyst depressuring and purging operations by . . .
1. Option 1	Flare	The flare pilot light must be present at all times and the flare must be operating at all times that emissions may be vented to it.	On and after [THE DATE 3 YEARS AFTER THE DATE OF PUBLICATION OF THE FINAL RULE AMENDMENTS IN THE **FEDERAL REGISTER**], meeting the requirements of § 63.670. Prior to [THE DATE 3 YEARS AFTER THE DATE OF PUBLICATION OF THE FINAL RULE AMENDMENTS IN THE **FEDERAL REGISTER**], collecting flare monitoring data according to § 63.1572 and recording for each 1-hour period whether the monitor was continuously operating and the pilot light was continuously present during each 1-hour period, or meeting the requirements of § 63.670.
* * * * * * *			

■ 73. Table 22 to subpart UUU of part 63 is amended by revising the entries for items 2 and 3 to read as follows:

* * * * *

TABLE 22 TO SUBPART UUU OF PART 63—INORGANIC HAP EMISSION LIMITS FOR CATALYTIC REFORMING UNITS

For . . .	You shall meet this emission limit for each applicable catalytic reforming unit process vent during coke burn-off and catalyst rejuvenation . . .
* * * * * * *	
2. Each existing cyclic or continuous catalytic reforming unit.	Reduce uncontrolled emissions of HCl by 97 percent by weight or to a concentration of 10 ppmv (dry basis), corrected to 3 percent oxygen.
3. Each new semi-regenerative, cyclic, or continuous catalytic reforming unit.	Reduce uncontrolled emissions of HCl by 97 percent by weight or to a concentration of 10 ppmv (dry basis), corrected to 3 percent oxygen.

■ 74. Table 24 to subpart UUU of part 63 is amended by revising the entries for Items 2 through 4 and footnote 2 to read as follows:

* * * * *

TABLE 24 TO SUBPART UUU OF PART 63—CONTINUOUS MONITORING SYSTEMS FOR INORGANIC HAP EMISSIONS FROM CATALYTIC REFORMING UNITS

If you use this type of control device for your vent . . .	You shall install and operate this type of continuous monitoring system . . .

TABLE 24 TO SUBPART UUU OF PART 63—CONTINUOUS MONITORING SYSTEMS FOR INORGANIC HAP EMISSIONS FROM CATALYTIC REFORMING UNITS—Continued

If you use this type of control device for your vent . . .	You shall install and operate this type of continuous monitoring system . . .
* * *	* * * *
2. Internal scrubbing system or no control device (e.g., hot regen system) to meet HCl outlet concentration limit.	Colormetric tube sampling system to measure the HCl concentration in the catalyst regenerator exhaust gas during coke burn-off and catalyst rejuvenation. The colormetric tube sampling system must meet the requirements in Table 41 of this subpart.
3. Internal scrubbing system to meet HCl percent reduction standard.	Continuous parameter monitoring system to measure and record the gas flow rate entering or exiting the internal scrubbing system during coke burn-off and catalyst rejuvenation; and continuous parameter monitoring system to measure and record the total water (or scrubbing liquid) flow rate entering the internal scrubbing system during coke burn-off and catalyst rejuvenation; and continuous parameter monitoring system to measure and record the pH or alkalinity of the water (or scrubbing liquid) exiting the internal scrubbing system during coke burn-off and catalyst rejuvenation.[2]
4. Fixed-bed gas-solid adsorption system	Continuous parameter monitoring system to measure and record the temperature of the gas entering or exiting the adsorption system during coke burn-off and catalyst rejuvenation; and colormetric tube sampling system to measure the gaseous HCl concentration in the adsorption system exhaust and at a point within the absorbent bed not to exceed 90 percent of the total length of the absorbent bed during coke burn-off and catalyst rejuvenation. The colormetric tube sampling system must meet the requirements in Table 41 of this subpart.
* * *	* * * *

* * * * *

[2] If applicable, you can use the alternative in § 63.1573(c)(1) instead of a continuous parameter monitoring system for pH of the water (or scrubbing liquid) or the alternative in § 63.1573(c)(2) instead of a continuous parameter monitoring system for alkalinity of the water (or scrubbing liquid).

■ 75. Table 25 to subpart UUU of part 63 is amended by revising the entries for items 2.a and 4.a to read as follows:

* * * * *

TABLE 25 TO SUBPART UUU OF PART 63—REQUIREMENTS FOR PERFORMANCE TESTS FOR INORGANIC HAP EMISSIONS FROM CATALYTIC REFORMING UNITS

For each new and existing catalytic reforming unit using . . .	You shall . . .	Using . . .	According to these requirements . . .
*	* *	*	* * *
2. Wet scrubber	a. Establish operating limit for pH level or alkalinity.	i. Data from continuous parameter monitoring systems.	Measure and record the pH or alkalinity of the water (or scrubbing liquid) exiting scrubber every 15 minutes during the entire period of the performance test. Determine and record the minimum hourly average pH or alkalinity level from the recorded values.
		ii. Alternative pH procedure in § 63.1573 (b)(1).	Measure and record the pH of the water (or scrubbing liquid) exiting the scrubber during coke burn-off and catalyst rejuvenation using pH strips at least three times during each test run. Determine and record the average pH level for each test run. Determine and record the minimum test run average pH level.
		iii. Alternative alkalinity method in § 63.1573(c)(2).	Measure and record the alkalinity of the water (or scrubbing liquid) exiting the scrubber during coke burn-off and catalyst rejuvenation using discrete titration at least three times during each test run. Determine and record the average alkalinity level for each test run. Determine and record the minimum test run average alkalinity level.
*	* *	*	* * *
4. Internal scrubbing system meeting HCl percent reduction standard.	a. Establish operating limit for pH level or alkalinity.	i. Data from continuous parameter monitoring system.	Measure and record the pH alkalinity of the water (or scrubbing liquid) exiting the internal scrubbing system every 15 minutes during the entire period of the performance test. Determine and record the minimum hourly average pH or alkalinity level from the recorded values.

TABLE 25 TO SUBPART UUU OF PART 63—REQUIREMENTS FOR PERFORMANCE TESTS FOR INORGANIC HAP EMISSIONS FROM CATALYTIC REFORMING UNITS—Continued

For each new and existing catalytic reforming unit using . . .	You shall . . .	Using . . .	According to these requirements . . .
		ii. Alternative pH method in § 63.1573(c)(1).	Measure and record pH of the water (or scrubbing liquid) exiting the internal scrubbing system during coke burn-off and catalyst rejuvenation using pH strips at least three times during each test run. Determine and record the average pH level for each test run. Determine and record the minimum test run average pH level.
		iii. Alternative alkalinity method in § 63.1573(c)(2).	Measure and record the alkalinity of the water (or scrubbing liquid) exiting the internal scrubbing system during coke burn-off and catalyst rejuvenation using discrete titration at least three times during each test run. Determine and record the average alkalinity level for each test run. Determine and record the minimum test run average alkalinity level.
*	*	*	*	*	*	*

* * * * *

■ 76. Table 28 to subpart UUU of part 63 is amended by revising the entry for item 5 and footnote 1 to read as follows:

The revisions read as follows:

* * * * *

TABLE 28 TO SUBPART UUU OF PART 63—CONTINUOUS COMPLIANCE WITH OPERATING LIMITS FOR INORGANIC HAP EMISSIONS FROM CATALYTIC REFORMING UNITS

For each new and existing catalytic reforming unit using this type of control device or system . . .	For this operating limit . . .	You shall demonstrate continuous compliance during coke burn-off and catalyst rejuvenation by . . .
* *	* *	* * *
5. Moving-bed gas-solid adsorption system (e.g., Chlorsorb™ System.	a. The daily average temperature of the gas entering or exiting the adsorption system must not exceed the limit established during the performance test.	Collecting the hourly and daily average temperature monitoring data according to § 63.1572; and maintaining the daily average temperature below the operating limit established during the performance test.
	b. The weekly average chloride level on the sorbent entering the adsorption system must not exceed the design or manufacturer's recommended limit (1.35 weight percent for the Chlorsorb™ System).	Collecting samples of the sorbent exiting the adsorption system three times per week (on non-consecutive days); and analyzing the samples for total chloride;[3] and determining and recording the weekly average chloride concentration; and maintaining the chloride concentration below the design or manufacturer's recommended limit (1.35 weight percent for the Chlorsorb™ System).
	c. The weekly average chloride level on the sorbent exiting the adsorption system must not exceed the design or manufacturer's recommended limit (1.8 weight percent for the Chlorsorb™ System).	Collecting samples of the sorbent exiting the adsorption system three times per week (on non-consecutive days); and analyzing the samples for total chloride concentration; and determining and recording the weekly average chloride concentration; and maintaining the chloride concentration below the design or manufacturer's recommended limit (1.8 weight percent Chlorsorb™ System).

[1] If applicable, you can use either alternative in § 63.1573(c) instead of a continuous parameter monitoring system for pH or alkalinity if you used the alternative method in the initial performance test.

* * * * *

■ 77. Table 29 to subpart UUU of part 63 is revised to read as follows:

As stated in § 63.1568(a)(1), you shall meet each emission limitation in the following table that applies to you.

TABLE 29 TO SUBPART UUU OF PART 63—HAP EMISSION LIMITS FOR SULFUR RECOVERY UNITS

For . . .	You shall meet this emission limit for each process vent . . .
1. Each new or existing Claus sulfur recovery unit part of a sulfur recovery plant with design capacity greater than 20 long tons per day and subject to the NSPS for sulfur oxides in 40 CFR 60.104(a)(2) or in 40 CFR 60.102a(f)(1).	a. 250 ppmv (dry basis) of sulfur dioxide (SO_2) at zero percent excess air, or concentration determined using Equation 1 of 40 CFR 60.102a(f)(1)(i), if you use an oxidation control system or if you use a reduction control system followed by incineration. b. 300 ppmv of reduced sulfur compounds calculated as ppmv SO_2 (dry basis) at zero percent excess air, or concentration determined using Equation 1 of 40 CFR 60.102a(f)(1)(i), if you use a reduction control system without incineration.
2. Each new or existing sulfur recovery unit (Claus or other type, regardless of size) not subject to the NSPS for sulfur oxides in 40 CFR 60.104(a)(2) or in 40 CFR 60.102a(f)(1): Option 1 (Elect NSPS).	a. 250 ppmv (dry basis) of SO_2 at zero percent excess air, or concentration determined using Equation 1 of 40 CFR 60.102a(f)(1)(i), if you use an oxidation control system or if you use a reduction control system followed by incineration. b. 300 ppmv of reduced sulfur compounds calculated as ppmv SO_2 (dry basis) at zero percent excess air, or concentration determined using Equation 1 of 40 CFR 60.102a(f)(1)(i), if you use a reduction control system without incineration.
3. Each new or existing sulfur recovery unit (Claus or other type, regardless of size) not subject to the NSPS for sulfur oxides in 40 CFR 60.104(a)(2) or in 40 CFR 60.102a(f)(1): Option 2 (TRS limit).	300 ppmv of total reduced sulfur (TRS) compounds, expressed as an equivalent SO_2 concentration (dry basis) at zero percent oxygen.

■ 78. Table 30 to subpart UUU of part 63 is revised to read as follows:

As stated in § 63.1568(a)(2), you shall meet each operating limit in the following table that applies to you.

TABLE 30 TO SUBPART UUU OF PART 63—OPERATING LIMITS FOR HAP EMISSIONS FROM SULFUR RECOVERY UNITS

For . . .	If use this type of control device	You shall meet this operating limit . . .
1. Each new or existing Claus sulfur recovery unit part of a sulfur recovery plant with design capacity greater than 20 long tons per day and subject to the NSPS for sulfur oxides in 40 CFR 60.104(a)(2) or in 40 CFR 60.102a(f)(1).	Not applicable	Not applicable.
2. Each new or existing sulfur recovery unit (Claus or other type, regardless of size) not subject to the NSPS for sulfur oxides in 40 CFR 60.104(a)(2) or in 40 CFR 60.102a(f)(1): Option 1 (Elect NSPS).	Not applicable	Not applicable.
3. Each new or existing sulfur recovery unit (Claus or other type, regardless of size) not subject to the NSPS for sulfur oxides in 40 CFR 60.104(a)(2) or in 40 CFR 60.102a(f)(1): Option 2 (TRS limit), if using continuous emissions monitoring systems.	Not applicable	Not applicable.
4. Each new or existing sulfur recovery unit (Claus or other type, regardless of size) not subject to the NSPS for sulfur oxides in 40 CFR 60.104(a)(2) or in 40 CFR 60.102a(f)(1): Option 2 (TRS limit), if using continuous parameter monitoring systems.	Thermal incinerator	Maintain the daily average combustion zone temperature above the limit established during the performance test; and maintain the daily average oxygen concentration in the vent stream (percent, dry basis) above the limit established during the performance test.

■ 79. Table 31 to subpart UUU is revised to read as follows:

As stated in § 63.1568(b)(1), you shall meet each requirement in the following table that applies to you.

TABLE 31 TO SUBPART UUU OF PART 63—CONTINUOUS MONITORING SYSTEMS FOR HAP EMISSIONS FROM SULFUR RECOVERY UNITS

For . . .	For this limit . . .	You shall install and operate this continuous monitoring system . . .
1. Each new or existing Claus sulfur recovery unit part of a sulfur recovery plant with design capacity greater than 20 long tons per day and subject to the NSPS for sulfur oxides in 40 CFR 60.104(a)(2) or in 40 CFR 60.102a(f)(1).	a. 250 ppmv (dry basis) of SO_2 at zero percent excess air if you use an oxidation or reduction control system followed by incineration.	Continuous emission monitoring system to measure and record the hourly average concentration of SO_2 (dry basis) at zero percent excess air for each exhaust stack. This system must include an oxygen monitor for correcting the data for excess air.

TABLE 31 TO SUBPART UUU OF PART 63—CONTINUOUS MONITORING SYSTEMS FOR HAP EMISSIONS FROM SULFUR RECOVERY UNITS—Continued

For . . .	For this limit . . .	You shall install and operate this continuous monitoring system . . .
	b. 300 ppmv of reduced sulfur compounds calculated as ppmv SO_2 (dry basis) at zero percent excess air if you use a reduction control system without incineration.	Continuous emission monitoring system to measure and record the hourly average concentration of reduced sulfur and oxygen (O_2) emissions. Calculate the reduced sulfur emissions as SO_2 (dry basis) at zero percent excess air. *Exception:* You can use an instrument having an air or SO_2 dilution and oxidation system to convert the reduced sulfur to SO_2 for continuously monitoring and recording the concentration (dry basis) at zero percent excess air of the resultant SO_2 instead of the reduced sulfur monitor. The monitor must include an oxygen monitor for correcting the data for excess oxygen.
	c. If you use Equation 1 of 40 CFR 60.102a(f)(1)(i) to set your emission limit.	Complete either item 1.a or item 1.b; and you must also install and operate a continuous emission monitoring system to measure and record the O_2 concentration for the inlet air/oxygen supplied to the system.
2. Option 1: Elect NSPS. Each new or existing sulfur recovery unit (Claus or other type, regardless of size) not subject to the NSPS for sulfur oxides in paragraph (a) (2) of 40 CFR 60.104 or in 40 CFR 60.102a(f)(1).	a. 250 ppmv (dry basis) of SO_2 at zero percent excess air if you use an oxidation or reduction control system followed by incineration.	Continuous emission monitoring system to measure and record the hourly average concentration of SO_2 (dry basis), at zero percent excess air for each exhaust stack. This system must include an oxygen monitor for correcting the data for excess air.
	b. 300 ppmv of reduced sulfur compounds calculated as ppmv SO_2 (dry basis) at zero percent excess air if you use a reduction control system without incineration.	Continuous emission monitoring system to measure and record the hourly average concentration of reduced sulfur and O_2 emissions for each exhaust stack. Calculate the reduced sulfur emissions as SO_2 (dry basis), at zero percent excess air. *Exception:* You can use an instrument having an air or O_2 dilution and oxidation system to convert the reduced sulfur to SO_2 for continuously monitoring and recording the concentration (dry basis) at zero percent excess air of the resultant SO_2 instead of the reduced sulfur monitor. The monitor must include an oxygen monitor for correcting the data for excess oxygen.
	c. If you use Equation 1 of 40 CFR 60.102a(f)(1)(i) to set your emission limit.	Complete either item 2.a or item 2.b; and you must also install and operate a continuous emission monitoring system to measure and record the O_2 concentration for the inlet air/oxygen supplied to the system.
3. Option 2: TRS limit. Each new or existing sulfur recovery unit (Claus or other type, regardless of size) not subject to the NSPS for sulfur oxides in 40 CFR 60.104(a)(2) or in 40 CFR 60.102a(f)(1).	300 ppmv of total reduced sulfur (TRS) compounds, expressed as an equivalent SO_2 concentration (dry basis) at zero percent oxygen.	i. Continuous emission monitoring system to measure and record the hourly average concentration of TRS for each exhaust stack; this monitor must include an oxygen monitor for correcting the data for excess oxygen; or ii. Continuous parameter monitoring systems to measure and record the combustion zone temperature of each thermal incinerator and the oxygen content (percent, dry basis) in the vent stream of the incinerator.

■ 80. Table 32 to subpart UUU of part 63 is revised to read as follows:

As stated in § 63.1568(b)(2) and (3), you shall meet each requirement in the following table that applies to you.

TABLE 32 TO SUBPART UUU OF PART 63—REQUIREMENTS FOR PERFORMANCE TESTS FOR HAP EMISSIONS FROM SULFUR RECOVERY UNITS NOT SUBJECT TO THE NEW SOURCE PERFORMANCE STANDARDS FOR SULFUR OXIDES

For . . .	You must . . .	Using . . .	According to these requirements . . .
1. Each new and existing sulfur recovery unit: Option 1 (Elect NSPS).	Measure SO_2 concentration (for an oxidation or reduction system followed by incineration) or measure the concentration of reduced sulfur (or SO_2 if you use an instrument to convert the reduced sulfur to SO_2) for a reduction control system without incineration.	Data from continuous emission monitoring system.	Collect SO_2 monitoring data every 15 minutes for 24 consecutive operating hours. Reduce the data to 1-hour averages computed from four or more data points equally spaced over each 1-hour period.
	Measure O_2 concentration for the inlet air/oxygen supplied to the system, if using Equation 1 of 40 CFR 60.102a(f)1)(i) to set your emission limit.	Data from continuous emission monitoring system.	Collect O_2 monitoring data every 15 minutes for 24 consecutive operating hours. Reduce the data to 1-hour averages computed from four or more data points equally spaced over each 1-hour period; and average over the 24-hour period for input to Equation 1 of 40 CFR 60.102a(f)(1)(i).
2. Each new and existing sulfur recovery unit: Option 2 (TRS limit), using CEMS.	Measure the concentration of reduced sulfur (or SO_2 if you use an instrument to convert the reduced sulfur to SO_2).	Data from continuous emission monitoring system.	Collect TRS data every 15 minutes for 24 consecutive operating hours. Reduce the data to 1-hour averages computed from four or more data points equally spaced over each 1-hour period.
3. Each new and existing sulfur recovery unit: Option 2 (TRS limit), if using continuous parameter monitoring systems.	a. Select sampling port's location and the number of traverse ports.	Method 1 or 1A in Appendix A–1 to part 60 of this chapter.	Sampling sites must be located at the outlet of the control device and prior to any releases to the atmosphere.
	b. Determine velocity and volumetric flow rate.	Method 2, 2A, 2C, 2D, 2F, or 2G in appendix A to part 60 of this chapter, as applicable.	
	c. Conduct gas molecular weight analysis; obtain the oxygen concentration needed to correct the emission rate for excess air.	Method 3, 3A, or 3B in appendix A to part 60 of this chapter, as applicable.	Take the samples simultaneously with reduced sulfur or moisture samples.
	d. Measure moisture content of the stack gas.	Method 4 in appendix A to part 60 of this chapter.	Make your sampling time for each Method 4 sample equal to that for 4 Method 15 samples.
	e. Measure the concentration of TRS.	Method 15 or 15A in appendix A to part 60 of this chapter, as applicable.	If the cross-sectional area of the duct is less than 5 square meters (m^2) or 54 square feet, you must use the centroid of the cross section as the sampling point. If the cross-sectional area is 5 m^2 or more and the centroid is more than 1 meter (m) from the wall, your sampling point may be at a point no closer to the walls than 1 m or 39 inches. Your sampling rate must be at least 3 liters per minute or 0.10 cubic feet per minute to ensure minimum residence time for the sample inside the sample lines.
	f. Calculate the SO_2 equivalent for each run after correcting for moisture and oxygen.	The arithmetic average of the SO_2 equivalent for each sample during the run.	
	g. Correct the reduced sulfur samples to zero percent excess air.	Equation 1 of § 63.1568.	
	h. Establish each operating limit in Table 30 of this subpart that applies to you.	Data from the continuous parameter monitoring system.	

TABLE 32 TO SUBPART UUU OF PART 63—REQUIREMENTS FOR PERFORMANCE TESTS FOR HAP EMISSIONS FROM SULFUR RECOVERY UNITS NOT SUBJECT TO THE NEW SOURCE PERFORMANCE STANDARDS FOR SULFUR OXIDES—Continued

For . . .	You must . . .	Using . . .	According to these requirements . . .
	i. Measure thermal incinerator: combustion zone temperature.	Data from the continuous parameter monitoring system.	Collect temperature monitoring data every 15 minutes during the entire period of the performance test; and determine and record the minimum hourly average temperature from all the readings.
	j. Measure thermal incinerator: oxygen concentration (percent, dry basis) in the vent stream.	Data from the continuous parameter monitoring system.	Collect oxygen concentration (percent, dry basis) data every 15 minutes during the entire period of the performance test; and determine and record the minimum hourly average percent excess oxygen concentration.

■ 81. Table 33 to subpart UUU of part 63 is revised to read as follows:

As stated in § 63.1568(b)(5), you shall meet each requirement in the following table that applies to you.

TABLE 33 TO SUBPART UUU OF PART 63—INITIAL COMPLIANCE WITH HAP EMISSION LIMITS FOR SULFUR RECOVERY UNITS

For . . .	For the following emission limit . . .	You have demonstrated initial compliance if . . .
1. Each new or existing Claus sulfur recovery unit part of a sulfur recovery plant with design capacity greater than 20 long tons per day and subject to the NSPS for sulfur oxides in 40 CFR 60.104(a)(2) or in 40 CFR 60.102a(f)(1).	a. 250 ppmv (dry basis) SO_2 at zero percent excess air, or concentration determined using Equation 1 of 40 CFR 60.102a(f)(1)(i), if you use an oxidation or reduction control system followed by incineration.	You have already conducted a performance test to demonstrate initial compliance with the NSPS and each 12-hour rolling average concentration of SO_2 emissions measured by the continuous emission monitoring system is less than or equal to 250 ppmv (dry basis) at zero percent excess air, or the concentration determined using Equation 1 of 40 CFR 60.102a(f)(1)(i). As part of the Notification of Compliance Status, you must certify that your vent meets the SO_2 limit. You are not required to do another performance test to demonstrate initial compliance. You have already conducted a performance evaluation to demonstrate initial compliance with the applicable performance specification. As part of your Notification of Compliance Status, you must certify that your continuous emission monitoring system meets the applicable requirements in § 63.1572. You are not required to do another performance evaluation to demonstrate initial compliance.
	b. 300 ppmv of reduced sulfur compounds calculated as ppmv SO_2 (dry basis) at zero percent excess air, or concentration determined using Equation 1 of 40 CFR 60.102a(f)(1)(i), if you use a reduction control system without incineration.	You have already conducted a performance test to demonstrate initial compliance with the NSPS and each 12-hour rolling average concentration of reduced sulfur compounds measured by your continuous emission monitoring system is less than or equal to 300 ppmv, calculated as ppmv SO_2 (dry basis) at zero percent excess air, or the concentration determined using Equation 1 of 40 CFR 60.102a(f)(1)(i). As part of the Notification of Compliance Status, you must certify that your vent meets the SO_2 limit. You are not required to do another performance test to demonstrate initial compliance. You have already conducted a performance evaluation to demonstrate initial compliance with the applicable performance specification. As part of your Notification of Compliance Status, you must certify that your continuous emission monitoring system meets the applicable requirements in § 63.1572. You are not required to do another performance evaluation to demonstrate initial compliance.
2. Option 1: Elect NSPS. Each new or existing sulfur recovery unit (Claus or other type, regardless of size) not subject to the NSPS for sulfur oxides in 40 CFR 60.104(a)(2) or in 40 CFR 60.102a(f)(1).	a. 250 ppmv (dry basis) of SO_2 at zero percent excess air, or concentration determined using Equation 1 of 40 CFR 60.102a(f)(1)(i), if you use an oxidation or reduction control system followed by incineration.	Each 12-hour rolling average concentration of SO_2 emissions measured by the continuous emission monitoring system during the initial performance test is less than or equal to 250 ppmv (dry basis) at zero percent excess air, or the concentration determined using Equation 1 of 40 CFR 60.102a(f)(1)(i); and your performance evaluation shows the monitoring system meets the applicable requirements in § 63.1572.

TABLE 33 TO SUBPART UUU OF PART 63—INITIAL COMPLIANCE WITH HAP EMISSION LIMITS FOR SULFUR RECOVERY UNITS—Continued

For . . .	For the following emission limit . . .	You have demonstrated initial compliance if . . .
	b. 300 ppmv of reduced sulfur compounds calculated as ppmv SO_2 (dry basis) at zero percent excess air, or concentration determined using Equation 1 of 40 CFR 60.102a(f)(1)(i), if you use a reduction control system without incineration.	Each 12-hour rolling average concentration of reduced sulfur compounds measured by the continuous emission monitoring system during the initial performance test is less than or equal to 300 ppmv, calculated as ppmv SO_2 (dry basis) at zero percent excess air, or the concentration determined using Equation 1 of 40 CFR 60.102a(f)(1)(i); and your performance evaluation shows the continuous emission monitoring system meets the applicable requirements in § 63.1572.
3. Option 2: TRS limit. Each new or existing sulfur recovery unit (Claus or other type, regardless of size) not subject to the NSPS for sulfur oxides in 40 CFR 60.104(a)(2) or in 40 CFR 60.102a(f)(1).	300 ppmv of TRS compounds expressed as an equivalent SO_2 concentration (dry basis) at zero percent oxygen.	If you use continuous parameter monitoring systems, the average concentration of TRS emissions measured using Method 15 during the initial performance test is less than or equal to 300 ppmv expressed as equivalent SO_2 concentration (dry basis) at zero percent oxygen. If you use a continuous emission monitoring system, each 12-hour rolling average concentration of TRS emissions measured by the continuous emission monitoring system during the initial performance test is less than or equal to 300 ppmv expressed as an equivalent SO_2 (dry basis) at zero percent oxygen; and your performance evaluation shows the continuous emission monitoring system meets the applicable requirements in § 63.1572.

■ 82. Table 34 to subpart UUU of part 63 is revised to read as follows:

As stated in § 63.1568(c)(1), you shall meet each requirement in the following table that applies to you.

TABLE 34 TO SUBPART UUU OF PART 63—CONTINUOUS COMPLIANCE WITH HAP EMISSION LIMITS FOR SULFUR RECOVERY UNITS

For . . .	For this emission limit . . .	You shall demonstrate continuous compliance by . . .
1. Each new or existing Claus sulfur recovery unit part of a sulfur recovery plant with design capacity greater than 20 long tons per day and subject to the NSPS for sulfur oxides in 40 CFR 60.104(a)(2) or in 40 CFR 60.102a(f)(1).	a. 250 ppmv (dry basis) of SO_2 at zero percent excess air, or concentration determined using Equation 1 of 40 CFR 60.102a(f)(1)(i), if you use an oxidation or reduction control system followed by incineration.	Collecting the hourly average SO_2 monitoring data (dry basis, percent excess air) according to § 63.1572; determining and recording each 12-hour rolling average concentration of SO_2; maintaining each 12-hour rolling average concentration of SO_2 at or below the applicable emission limitation; and reporting any 12-hour rolling average concentration of SO_2 greater than the applicable emission limitation in the semiannual compliance report required by § 63.1575.
	b. 300 ppmv of reduced sulfur compounds calculated as ppmv SO_2 (dry basis) at zero percent excess air, or concentration determined using Equation 1 of 40 CFR 60.102a(f)(1)(i), if you use a reduction control system without incineration.	Collecting the hourly average reduced sulfur (and air or O_2 dilution and oxidation) monitoring data according to § 63.1572; determining and recording each 12-hour rolling average concentration of reduced sulfur; maintaining each 12-hour rolling average concentration of reduced sulfur at or below the applicable emission limitation; and reporting any 12-hour rolling average concentration of reduced sulfur greater than the applicable emission limitation in the semiannual compliance report required by § 63.1575.
2. Option 1: Elect NSPS. Each new or existing sulfur recovery unit (Claus or other type, regardless of size) not subject to the NSPS for sulfur oxides in 40 CFR 60.104(a)(2) or in 40 CFR 60.102a(f)(1).	a. 250 ppmv (dry basis) of SO_2 at zero percent excess air, or concentration determined using Equation 1 of 40 CFR 60.102a(f)(1)(i), if you use an oxidation or reduction control system followed by incineration.	Collecting the hourly average SO_2 data (dry basis, percent excess air) according to § 63.1572; determining and recording each 12-hour rolling average concentration of SO_2; maintaining each 12-hour rolling average concentration of SO_2 at or below the applicable emission limitation; and reporting any 12-hour rolling average concentration of SO_2 greater than the applicable emission limitation in the semiannual compliance report required by § 63.1575.
	b. 300 ppmv of reduced sulfur compounds calculated as ppmv SO_2 (dry basis) at zero percent excess air, or concentration determined using Equation 1 of 40 CFR 60.102a(f)(1)(i), if you use a reduction control system without incineration.	Collecting the hourly average reduced sulfur (and air or O_2 dilution and oxidation) monitoring data according to § 63.1572; determining and recording each 12-hour rolling average concentration of reduced sulfur; maintaining each 12-hour rolling average concentration of reduced sulfur at or below the applicable emission limitation; and reporting any 12-hour rolling average concentration of reduced sulfur greater than the applicable emission limitation in the semiannual compliance report required by § 63.1575.
3. Option 2: TRS limit. Each new or existing sulfur recovery unit (Claus or other type, regardless of size) not subject to the NSPS for sulfur oxides in 40 CFR 60.104(a)(2) or in 40 CFR 60.102a(f)(1).	300 ppmv of TRS compounds, expressed as an SO_2 concentration (dry basis) at zero percent oxygen or reduced sulfur compounds calculated as ppmv SO_2 (dry basis) at zero percent excess air.	i. If you use continuous parameter monitoring systems, collecting the hourly average TRS monitoring data according to § 63.1572 and maintaining each 12-hour average concentration of TRS at or below the applicable emission limitation; or

TABLE 34 TO SUBPART UUU OF PART 63—CONTINUOUS COMPLIANCE WITH HAP EMISSION LIMITS FOR SULFUR RECOVERY UNITS—Continued

For . . .	For this emission limit . . .	You shall demonstrate continuous compliance by . . .
		ii. If you use a continuous emission monitoring system, collecting the hourly average TRS monitoring data according to § 63.1572, determining and recording each 12-hour rolling average concentration of TRS; maintaining each 12-hour rolling average concentration of TRS at or below the applicable emission limitation; and reporting any 12-hour rolling average TRS concentration greater than the applicable emission limitation in the semiannual compliance report required by § 63.1575.

■ 83. Table 35 to subpart UUU of part 63 is revised to read as follows:

As stated in § 63.1568(c)(1), you shall meet each requirement in the following table that applies to you.

TABLE 35 TO SUBPART UUU OF PART 63—CONTINUOUS COMPLIANCE WITH OPERATING LIMITS FOR HAP EMISSIONS FROM SULFUR RECOVERY UNITS

For . . .	For this operating limit . . .	You shall demonstrate continuous compliance by . . .
1. Each new or existing Claus sulfur recovery unit part of a sulfur recovery plant with design capacity greater than 20 long tons per day and subject to the NSPS for sulfur oxides in paragraph 40 CFR 60.104(a)(2) or in 40 CFR 60.102a(f)(1).	Not applicable	Meeting the requirements of Table 34 of this subpart.
2. Option 1: Elect NSPS. Each new or existing sulfur recovery unit (Claus or other type, regardless of size) not subject to the NSPS for sulfur oxides in 40 CFR 60.104(a)(2) or in 40 CFR 60.102a(f)(1).	Not applicable	Meeting the requirements of Table 34 of this subpart.
3. Option 2: TRS limit. Each new or existing sulfur recovery unit (Claus or other type, regardless of size) not subject to the NSPS for sulfur oxides in 40 CFR 60.104(a)(2) or in 40 CFR 60.102a(f)(1).	a. Maintain the daily average combustion zone temperature above the level established during the performance test.	Collecting the hourly and daily average temperature monitoring data according to § 63.1572; and maintaining the daily average combustion zone temperature at or above the limit established during the performance test.
	b. The daily average oxygen concentration in the vent stream (percent, dry basis) must not fall below the level established during the performance test.	Collecting the hourly and daily average O_2 monitoring data according to § 63.1572; and maintaining the average O_2 concentration above the level established during the performance test.

■ 84. Table 40 to subpart UUU of part 63 is revised to read as follows:

As stated in § 63.1572(a)(1) and (b)(1), you shall meet each requirement in the following table that applies to you.

TABLE 40 TO SUBPART UUU OF PART 63—REQUIREMENTS FOR INSTALLATION, OPERATION, AND MAINTENANCE OF CONTINUOUS OPACITY MONITORING SYSTEMS AND CONTINUOUS EMISSION MONITORING SYSTEMS

This type of continuous opacity or emission monitoring system . . .	Must meet these requirements . . .
1. Continuous opacity monitoring system	Performance specification 1 (40 CFR part 60, Appendix B).
2. PM CEMS; this monitor must include an O_2 monitor for correcting the data for excess air.	The requirements in 40 CFR 60.105a(d).
3. CO_2, O_2, and CO monitors for coke burn-off rate.	The requirements in 40 CFR 60.105a(b)(2).
4. CO continuous emission monitoring system	Performance specification 4 (40 CFR part 60, Appendix B); span value of 1,000 ppm; and procedure 1 (40 CFR part 60, Appendix F) except relative accuracy test audits are required annually instead of quarterly.

TABLE 40 TO SUBPART UUU OF PART 63—REQUIREMENTS FOR INSTALLATION, OPERATION, AND MAINTENANCE OF CONTINUOUS OPACITY MONITORING SYSTEMS AND CONTINUOUS EMISSION MONITORING SYSTEMS—Continued

This type of continuous opacity or emission monitoring system . . .	Must meet these requirements . . .
5. CO continuous emission monitoring system used to demonstrate emissions average under 50 ppm (dry basis).	Performance specification 4 (40 CFR part 60, Appendix B); and span value of 100 ppm.
6. SO_2 continuous emission monitoring system for sulfur recovery unit with oxidation control system or reduction control system; this monitor must include an O_2 monitor for correcting the data for excess air.	Performance specification 2 (40 CFR part 60, Appendix B); span value of 500 ppm SO_2, or if using Equation 1 of 40 CFR 60.102a(f)(1)(i), span value of two times the limit at the highest O_2 concentration; use Methods 6 or 6C (40 CFR part 60, Appendix A–4) for certifying the SO_2 monitor and Methods 3A or 3B (40 CFR part 60, Appendix A–2) for certifying the O_2 monitor; and procedure 1 (40 CFR part 60, Appendix F) except relative accuracy test audits are required annually instead of quarterly.
7. Reduced sulfur and O_2 continuous emission monitoring system for sulfur recovery unit with reduction control system not followed by incineration; this monitor must include an O_2 monitor for correcting the data for excess air unless exempted.	Performance specification 5 (40 CFR part 60, Appendix B), except calibration drift specification is 2.5 percent of the span value instead of 5 percent; span value is 450 ppm reduced sulfur, or if using Equation 1 of 40 CFR 60.102a(f)(1)(i), span value of two times the limit at the highest O_2 concentration; use Methods 15 or 15A (40 CFR part 60, Appendix A–5) for certifying the reduced sulfur monitor and Methods 3A or 3B (40 CFR part 60, Appendix A–2) for certifying the O_2 monitor; if Method 3A or 3B yields O_2 concentrations below 0.25 percent during the performance evaluation, the O_2 concentration can be assumed to be zero and the O_2 monitor is not required; and procedure 1 (40 CFR part 60, Appendix F), except relative accuracy test audits, are required annually instead of quarterly.
8. Instrument with an air or O_2 dilution and oxidation system to convert reduced sulfur to SO_2 for continuously monitoring the concentration of SO_2 instead of reduced sulfur monitor and O_2 monitor.	Performance specification 5 (40 CFR part 60, Appendix B); span value of 375 ppm SO_2 or if using Equation 1 of 40 CFR 60.102a(f)(1)(i), span value of two times the limit at the highest O_2 concentration; use Methods 15 or 15A for certifying the reduced sulfur monitor and 3A or 3B for certifying the O_2 monitor; and procedure 1 (40 CFR part 60, Appendix F), except relative accuracy test audits, are required annually instead of quarterly.
9. TRS continuous emission monitoring system for sulfur recovery unit; this monitor must include an O_2 monitor for correcting the data for excess air.	Performance specification 5 (40 CFR part 60, Appendix B).
10. O_2 monitor for oxygen concentration	If necessary due to interferences, locate the oxygen sensor prior to the introduction of any outside gas stream; performance specification 3 (40 CFR part 60, Appendix B; and procedure 1 (40 CFR part 60, Appendix F), except relative accuracy test audits, are required annually instead of quarterly.
11. O_2 monitor for oxygen concentration in inlet or supply.	Install, operate, and maintain each O_2 monitor according to Performance Specification 3 of Appendix B to part 60; the span value for the O_2 monitor must be selected between 20 and 100 percent; conduct performance evaluations for O_2 monitor according to Performance Specification 3 of Appendix B to part 60, and must use Method 3A or 3B of Appendix A–2 to part 60 for conducting relative accuracy evaluations; comply with applicable quality assurance procedures of Appendix F to part 60 for each monitor, including annual accuracy determinations for each O_2 monitor and daily calibration drift determinations.

■ 85. Table 41 to subpart UUU of part 63 is revised to read as follows:

As stated in § 63.1572(c)(1), you shall meet each requirement in the following table that applies to you.

TABLE 41 TO SUBPART UUU OF PART 63—REQUIREMENTS FOR INSTALLATION, OPERATION, AND MAINTENANCE OF CONTINUOUS PARAMETER MONITORING SYSTEMS

If you use . . .	You shall . . .
1. pH strips	Use pH strips with an accuracy of ±10 percent.
2. pH meter	Locate the pH sensor in a position that provides a representative measurement of pH; ensure the sample is properly mixed and representative of the fluid to be measured. Use a pH sensor with an accuracy of at least ±0.2 pH units. Check the pH meter's calibration on at least one point at least once daily; check the pH meter's calibration on at least two points at least once quarterly; at least monthly, inspect all components for integrity and all electrical components for continuity; record the results of each calibration check and inspection.
3. Colormetric tube sampling system.	Use a colormetric tube sampling system with a printed numerical scale in ppmv, a standard measurement range of 1 to 10 ppmv (or 1 to 30 ppmv if applicable), and a standard deviation for measured values of no more than ±15 percent. System must include a gas detection pump and hot air probe if needed for the measurement range.
4. BLD	Follow the requirements in 40 CFR 60.105a(c).
5. Voltage, secondary current, or total power input sensors.	Use meters with an accuracy of at least ± 5 percent over the operating range. Each time that the unit is not operating, confirm that the meters read zero. Conduct a calibration check at least annually; conduct calibration checks following any period of more than 24 hours throughout which the meter exceeds the manufacturer's specified maximum operating range; at least monthly, inspect all components of the continuous parameter monitoring system for integrity and all electrical connections for continuity; and record the results of each calibration check and inspection.

TABLE 41 TO SUBPART UUU OF PART 63—REQUIREMENTS FOR INSTALLATION, OPERATION, AND MAINTENANCE OF CONTINUOUS PARAMETER MONITORING SYSTEMS—Continued

If you use . . .	You shall . . .
6. Pressure/Pressure drop[1] sensors.	Locate the pressure sensor(s) in a position that provides a representative measurement of the pressure; minimizes or eliminates pulsating pressure, vibration, and internal and external corrosion. Use a gauge with an accuracy of at least ± 5 percent over the operating range or 0.5 inches of water column, whichever is greater. Check pressure tap for plugs at least once a week; using a manometer, check gauge calibration quarterly and transducer calibration monthly; conduct calibration checks following any period of more than 24 hours throughout which the sensor exceeds the manufacturer's specified maximum operating pressure range or install a new pressure sensor; at least monthly, inspect all components for integrity, all electrical connections for continuity, and all mechanical connections for leakage; record the results of each calibration check and inspection.
7. Air flow rate, gas flow rate, or total water (or scrubbing liquid) flow rate sensors.	Locate the flow sensor(s) and other necessary equipment (such as straightening vanes) in a position that provides representative flow; reduce swirling flow or abnormal velocity distributions due to upstream and downstream disturbances. If you elect to comply with Option 3 (Ni lb/hr) or Option 4 (Ni lb/1,000 lb of coke burn-off) for the HAP metal emission limitations in § 63.1564, install the continuous parameter monitoring system for gas flow rate as close as practical to the continuous opacity monitoring system; and if you don't use a continuous opacity monitoring system, install the continuous parameter monitoring system for gas flow rate as close as practical to the control device. Use a flow rate sensor with an accuracy of at least ±5 percent, or 0.5 gallons per minute for liquid flow, or 10 cubic feet per minute for gas flow, whichever is greater. Conduct a flow sensor calibration check at least semiannually; conduct calibration checks following any period of more than 24 hours throughout which the sensor exceeds the manufacturer's specified maximum operating range or install a new flow sensor; at least monthly, inspect all components for leakage; record the results of each calibration check and inspection.
8. Temperature sensors	Locate the temperature sensor in the combustion zone, or in the ductwork immediately downstream of the combustion zone before any substantial heat exchange occurs or in the ductwork immediately downstream of the regenerator; locate the temperature sensor in a position that provides a representative temperature; shield the temperature sensor system from electromagnetic interference and chemical contaminants. Use a temperature sensor with an accuracy of at least ±1 percent of the temperature being measured, expressed in degrees Celsius (C) or 2.8 degrees C, whichever is greater. Conduct calibration checks at least annually; conduct calibration checks following any period of more than 24 hours throughout which the sensor exceeds the manufacturer's specified maximum operating temperature range, or install a new temperature sensor; at least monthly, inspect all components for integrity and all electrical connections for continuity, oxidation, and galvanic corrosion; record the results of each calibration check and inspection.
9. Oxygen content sensors[2]	Locate the oxygen sensor so that it provides a representative measurement of the oxygen content of the exit gas stream; ensure the sample is properly mixed and representative of the gas to be measured. Use an oxygen sensor with an accuracy of at least ±1 percent of the range of the sensor. Conduct calibration checks at least quarterly; conduct calibration checks following any period of more than 24 hours throughout which the sensor exceeds the manufacturer's specified maximum operating range, or install a new oxygen sensor; at least monthly, inspect all components for integrity and all electrical connections for continuity; record the results of each calibration and inspection.

[1] Not applicable to non-venturi wet scrubbers of the jet-ejector design.
[2] This does not replace the requirements for oxygen monitors that are required to use continuous emissions monitoring systems. These requirements apply to oxygen sensors that are continuous parameter monitors, such as those that monitor combustion zone oxygen concentration and regenerator exit oxygen concentration.

■ 86. Table 43 to subpart UUU is revised to read as follows:

As stated in § 63.1575(a), you shall meet each requirement in the following table that applies to you.

TABLE 43 TO SUBPART UUU OF PART 63—REQUIREMENTS FOR REPORTS

You must submit . . .	The report must contain . . .	You shall submit the report . . .
1. A compliance report	If there are not deviations from any emission limitation or work practice standard that applies to you, a statement that there were no deviations from the standards during the reporting period and that no continuous opacity monitoring system or continuous emission monitoring system was inoperative, inactive, out-of-control, repaired, or adjusted; if you have a deviation from any emission limitation or work practice standard during the reporting period, the report must contain the information in § 63.1575(c) through (e).	Semiannually according to the requirements in § 63.1575(b).
2. Performance test and CEMS performance evaluation data.	On and after [THE DATE 3 YEARS AFTER THE DATE OF PUBLICATION OF THE FINAL RULE AMENDMENTS IN THE **FEDERAL REGISTER**], the information specified in § 63.1575(k)(1).	Within 60 days after the date of completing each test according to the requirements in § 63.1575(k).

■ 87. Table 44 to subpart UUU of part 63 is revised to read as follows:

As stated in § 63.1577, you shall meet each requirement in the following table that applies to you.

TABLE 44 TO SUBPART UUU OF PART 63—APPLICABILITY OF NESHAP GENERAL PROVISIONS TO SUBPART UUU

Citation	Subject	Applies to subpart UUU	Explanation
§ 63.1(a)(1)–(4)	General Applicability	Yes.	
§ 63.1(a)(5)	[Reserved]	Not applicable	
§ 63.1(a)(6)		Yes	Except the correct mail drop (MD) number is C404–04.
§ 63.1(a)(7)–(9)	[Reserved]	Not applicable	
§ 63.1(a)(10)–(12)		Yes	Except that subpart UUU specifies calendar or operating day.
§ 63.1(b)(1)	Initial Applicability Determination for this part.	Yes	
§ 63.1(b)(2)	[Reserved]	Not applicable	
§ 63.1(b)(3)		Yes	
§ 63.1(c)(1)	Applicability of this part after a Relevant Standard has been set under this part.	Yes	
§ 63.1(c)(2)		No	Area sources are not subject to subpart UUU.
§ 63.1(c)(3)–(4)	[Reserved]	Not applicable	
§ 63.1(c)(5)		Yes	
§ 63.1(d)	[Reserved]	Not applicable	
§ 63.1(e)	Applicability of Permit Program.	Yes	
§ 63.2	Definitions	Yes	§ 63.1579 of subpart UUU specifies that if the same term is defined in subparts A and UUU, it shall have the meaning given in subpart UUU.
§ 63.3	Units and Abbreviations	Yes	
§ 63.4(a)(1)–(2)	Prohibited Activities	Yes	
§ 63.4(a)(3)–(5)	[Reserved]	Not applicable	
§ 63.4(b)–(c)	Circumvention and Fragmentation.	Yes	
§ 63.5(a)	Construction and Reconstruction	Yes	
§ 63.5(b)(1)		Yes	
§ 63.5(b)(2)	[Reserved]	Not applicable	
§ 63.5(b)(3)–(4)		Yes	In § 63.5(b)(4), replace the reference to § 63.9(b) with § 63.9(b)(4) and (5).
§ 63.5(b)(5)	[Reserved]	Not applicable	
§ 63.5(b)(6)		Yes	
§ 63.5(c)	[Reserved]	Not applicable	
§ 63.5(d)(1)(i)	Application for Approval of Construction or Reconstruction—General Application Requirements.	Yes	Except subpart UUU specifies the application is submitted as soon as practicable before startup but not later than 90 days after the promulgation date if construction or reconstruction had commenced and initial startup had not occurred before promulgation.
§ 63.5(d)(1)(ii)		Yes	Except that emission estimates specified in § 63.5(d)(1)(ii)(H) are not required, and § 63.5(d)(1)(ii)(G) and (I) are Reserved and do not apply.
§ 63.5(d)(1)(iii)		No	Subpart UUU specifies submission of notification of compliance status.
§ 63.5(d)(2)		Yes	
§ 63.5(d)(3)		Yes	
§ 63.5(d)(4)		Yes	
§ 63.5(e)	Approval of Construction or Reconstruction.	Yes	
§ 63.5(f)(1)	Approval of Construction or Reconstruction Based on State Review.	Yes	
§ 63.5(f)(2)		Yes	Except that the cross-reference to § 63.9(b)(2) does not apply.
§ 63.6(a)	Compliance with Standards and Maintenance—Applicability.	Yes	
§ 63.6(b)(1)–(4)	Compliance Dates for New and Reconstructed Sources.	Yes	
§ 63.6(b)(5)		Yes	Except that subpart UUU specifies different compliance dates for sources.
§ 63.6(b)(6)	[Reserved]	Not applicable	

TABLE 44 TO SUBPART UUU OF PART 63—APPLICABILITY OF NESHAP GENERAL PROVISIONS TO SUBPART UUU—Continued

Citation	Subject	Applies to subpart UUU	Explanation
§ 63.6(b)(7)	Compliance Dates for New and Reconstructed Area Sources That Become Major.	Yes	
§ 63.6(c)(1)–(2)	Compliance Dates for Existing Sources.	Yes	Except that subpart UUU specifies different compliance dates for sources subject to Tier II gasoline sulfur control requirements.
§ 63.6(c)(3)–(4)	[Reserved]	Not applicable	
§ 63.6(c)(5)	Compliance Dates for Existing Area Sources That Become Major.	Yes	
§ 63.6(d)	[Reserved]	Not applicable	
§ 63.6(e)(1)(i)	General Duty to Minimize Emissions.	No	See § 63.1570(c) for general duty requirement.
§ 63.6(e)(1)(ii)	Requirement to Correct Malfunctions as Soon as Possible.	No	
§ 63.6(e)(1)(iii)	Compliance with Standards and Maintenance Requirements.	Yes	
§ 63.6(e)(2)	[Reserved]	Not applicable	
§ 63.6(e)(3)(i)	Startup, Shutdown, and Malfunction Plan Requirements.	No	
§ 63.6(e)(3)(ii)	[Reserved]	Not applicable	
§ 63.6(e)(3)(iii)–(ix)		No	
§ 63.6(f)(1)	SSM Exemption	No	
§ 63.6(f)(2)(i)–(iii)(C)	Compliance with Standards and Maintenance Requirements.	Yes	
§ 63.6(f)(2)(iii)(D)		Yes	
§ 63.6(f)(2)(iv)–(v)		Yes	
§ 63.6(f)(3)		Yes	Except the cross-references to § 63.6(f)(1) and § 63.6(e)(1)(i) are changed to § 63.1570(c).
§ 63.6(g)	Alternative Standard	Yes	
§ 63.6(h)(1)	SSM Exemption for Opacity/VE Standards.	No	
§ 63.6(h)(2)(i)	Determining Compliance with Opacity/VE Standards.	No	Subpart UUU specifies methods.
§ 63.6(h)(2)(ii)	[Reserved]	Not applicable	
§ 63.6(h)(2)(iii)		Yes	
§ 63.6(h)(3)	[Reserved]	Not applicable	
§ 63.6(h)(4)	Notification of Opacity/VE Observation Date.	Yes	Applies to Method 22 tests.
§ 63.6(h)(5)	Conducting Opacity/VE Observations.	No	
§ 63.6(h)(6)	Records of Conditions During Opacity/VE Observations.	Yes	Applies to Method 22 observations.
§ 63.6(h)(7)(i)	Report COM Monitoring Data from Performance Test.	Yes	
§ 63.6(h)(7)(ii)	Using COM Instead of Method 9.	No	
§ 63.6(h)(7)(iii)	Averaging Time for COM during Performance Test.	Yes	
§ 63.6(h)(7)(iv)	COM Requirements	Yes	
§ 63.6(h)(7)(v)	COMS Results and Visual Observations.	Yes	
§ 63.6(h)(8)	Determining Compliance with Opacity/VE Standards.	Yes	
§ 63.6(h)(9)	Adjusted Opacity Standard	Yes	
§ 63.6(i)(1)–(14)	Extension of Compliance	Yes	Extension of compliance under § 63.6(i)(4) not applicable to a facility that installs catalytic cracking feed hydrotreating and receives an extended compliance date under § 63.1563(c).
§ 63.6(i)(15)	[Reserved]	Not applicable	
§ 63.6(i)(16)		Yes	

TABLE 44 TO SUBPART UUU OF PART 63—APPLICABILITY OF NESHAP GENERAL PROVISIONS TO SUBPART UUU—Continued

Citation	Subject	Applies to subpart UUU	Explanation
§ 63.6(j)	Presidential Compliance Exemption.	Yes	
§ 63.7(a)(1)	Performance Test Requirements Applicability.	Yes	Except that subpart UUU specifies the applicable test and demonstration procedures.
§ 63.7(a)(2)	Performance Test Dates	Yes	Except test results must be submitted in the Notification of Compliance Status report due 150 days after the compliance date.
§ 63.7(a)(3)	Section 114 Authority	Yes	
§ 63.7(a)(4)	Force Majeure	Yes	
§ 63.7(b)	Notifications	Yes	Except that subpart UUU specifies notification at least 30 days prior to the scheduled test date rather than 60 days.
§ 63.7(c)	Quality Assurance Program/Site-Specific Test Plan.	Yes	
§ 63.7(d)	Performance Test Facilities	Yes	
§ 63.7(e)(1)	Performance Testing	No	See § 63.1571(b)(1).
§ 63.7(e)(2)–(4)	Conduct of Tests	Yes	
§ 63.7(f)	Alternative Test Method	Yes	
§ 63.7(g)	Data Analysis, Recordkeeping, Reporting.	Yes	Except performance test reports must be submitted with notification of compliance status due 150 days after the compliance date, and § 63.7(g)(2) is Reserved and does not apply.
§ 63.7(h)	Waiver of Tests	Yes	
§ 63.8(a)(1)	Monitoring Requirements—Applicability.	Yes	
§ 63.8(a)(2)	Performance Specifications	Yes	
§ 63.8(a)(3)	[Reserved]	Not applicable	
§ 63.8(a)(4)	Monitoring with Flares	Yes	Except that for a flare complying with § 63.670, the cross-reference to § 63.11 in this paragraph does not include § 63.11(b).
§ 63.8(b)(1)	Conduct of Monitoring	Yes	
§ 63.8(b)(2)–(3)	Multiple Effluents and Multiple Monitoring Systems.	Yes	Subpart UUU specifies the required monitoring locations.
§ 63.8(c)(1)	Monitoring System Operation and Maintenance.	Yes	
§ 63.8(c)(1)(i)	General Duty to Minimize Emissions and CMS Operation.	No	See § 63.1570(c).
§ 63.8(c)(1)(ii)	Keep Necessary Parts for CMS.	Yes	
§ 63.8(c)(1)(iii)	Requirement to Develop SSM Plan for CMS.	No	
§ 63.8(c)(2)–(3)	Monitoring System Installation.	Yes	Except that subpart UUU specifies that for continuous parameter monitoring systems, operational status verification includes completion of manufacturer written specifications or installation, operation, and calibration of the system or other written procedures that provide adequate assurance that the equipment will monitor accurately.
§ 63.8(c)(4)	Continuous Monitoring System Requirements.	Yes	
§ 63.8(c)(5)	COMS Minimum Procedures.	Yes	
§ 63.8(c)(6)	CMS Requirements	Yes	
§ 63.8(c)(7)–(8)	CMS Requirements	Yes	
§ 63.8(d)(1)–(2)	Quality Control Program for CMS.	Yes	
§ 63.8(d)(3)	Written Procedures for CMS.	No	
§ 63.8(e)	CMS Performance Evaluation.	Yes	Except that results are to be submitted as part of the Notification Compliance Status due 150 days after the compliance date.
§ 63.8(f)(1)–(5)	Alternative Monitoring Methods.	Yes	Except that subpart UUU specifies procedures for requesting alternative monitoring systems and alternative parameters.
§ 63.8(f)(6)	Alternative to Relative Accuracy Test.	Yes	Applicable to continuous emission monitoring systems if performance specification requires a relative accuracy test audit.
§ 63.8(g)(1)–(4)	Reduction of Monitoring Data.	Yes	Applies to continuous opacity monitoring system or continuous emission monitoring system.

TABLE 44 TO SUBPART UUU OF PART 63—APPLICABILITY OF NESHAP GENERAL PROVISIONS TO SUBPART UUU—Continued

Citation	Subject	Applies to subpart UUU	Explanation
§ 63.8(g)(5)	Data Reduction	No	Subpart UUU specifies requirements.
§ 63.9(a)	Notification Requirements—Applicability.	Yes	Duplicate Notification of Compliance Status report to the Regional Administrator may be required.
§ 63.9(b)(1)–(2)	Initial Notifications	Yes	Except that notification of construction or reconstruction is to be submitted as soon as practicable before startup but no later than 30 days after the effective date if construction or reconstruction had commenced but startup had not occurred before the effective date.
§ 63.9(b)(3)	[Reserved]	Not applicable	
§ 63.9(b)(4)–(5)	Initial Notification Information.	Yes	Except § 63.9(b)(4)(ii)–(iv), which are Reserved and do not apply.
§ 63.9(c)	Request for Extension of Compliance.	Yes	
§ 63.9(d)	New Source Notification for Special Compliance Requirements.	Yes	
§ 63.9(e)	Notification of Performance Test.	Yes	Except that notification is required at least 30 days before test.
§ 63.9(f)	Notification of VE/Opacity Test.	Yes	
§ 63.9(g)	Additional Notification Requirements for Sources with Continuous Monitoring Systems.	Yes	
§ 63.9(h)	Notification of Compliance Status.	Yes	Except that subpart UUU specifies the notification is due no later than 150 days after compliance date, and except that the reference to § 63.5(d)(1)(ii)(H) in § 63.9(h)(5) does not apply.
§ 63.9(i)	Adjustment of Deadlines	Yes	
§ 63.9(j)	Change in Previous Information.	Yes	
63.10(a)	Recordkeeping and Reporting Applicability.	Yes	
§ 63.10(b)(1)	General Recordkeeping Requirements.	Yes	
§ 63.10(b)(2)(i)	Recordkeeping of Occurrence and Duration of Startups and Shutdowns.	No	
§ 63.10(b)(2)(ii)	Recordkeeping of Malfunctions.	No	See § 63.1576(a)(2) for recordkeeping of (1) date, time and duration; (2) listing of affected source or equipment, and an estimate of the volume of each regulated pollutant emitted over the standard; and (3) actions taken to minimize emissions and correct the failure.
§ 63.10(b)(2)(iii)	Maintenance Records	Yes	
§ 63.10(b)(2)(iv)–(v)	Actions Taken to Minimize Emissions During SSM.	No	
§ 63.10(b)(2)(vi)	Recordkeeping for CMS Malfunctions.	Yes	
§ 63.10(b)(2)(vii)–(xiv)	Other CMS Requirements	Yes	
§ 63.10(b)(3)	Recordkeeping for Applicability Determinations..	Yes	
§ 63.10(c)(1)–(6)	Additional Records for Continuous Monitoring Systems.	Yes	Except § 63.10(c)(2)–(4), which are Reserved and do not apply.
§ 63.10(c)(7)–(8)	Additional Recordkeeping Requirements for CMS—Identifying Exceedances and Excess Emissions.	Yes	
§ 63.10(c)(9)	[Reserved]	Not applicable	
§ 63.10(c)(10)	Recording Nature and Cause of Malfunctions.	No	See § 63.1576(a)(2) for malfunctions recordkeeping requirements.
§ 63.10(c)(11)	Recording Corrective Actions.	No	See § 63.1576(a)(2) for malfunctions recordkeeping requirements.
§ 63.10(c)(12)–(14)	Additional CMS Recordkeeping Requirements.	Yes	
§ 63.10(c)(15)	Use of SSM Plan	No	
§ 63.10(d)(1)	General Reporting Requirements.	Yes	

TABLE 44 TO SUBPART UUU OF PART 63—APPLICABILITY OF NESHAP GENERAL PROVISIONS TO SUBPART UUU—Continued

Citation	Subject	Applies to subpart UUU	Explanation
§ 63.10(d)(2)	Performance Test Results	No	Subpart UUU requires performance test results to be reported as part of the Notification of Compliance Status due 150 days after the compliance date.
§ 63.10(d)(3)	Opacity or VE Observations.	Yes	
§ 63.10(d)(4)	Progress Reports	Yes	
§ 63.10(d)(5)	SSM Reports	No	See § 63.1575(d) for CPMS malfunction reporting and § 63.1575(e) for COMS and CEMS malfunction reporting.
§ 63.10(e)(1)–(2)	Additional CMS Reports	Yes	Except that reports of performance evaluations must be submitted in Notification of Compliance Status.
§ 63.10(e)(3)	Excess Emissions/CMS Performance Reports.	No	Subpart UUU specifies the applicable requirements.
§ 63.10(e)(4)	COMS Data Reports	Yes	
§ 63.10(f)	Recordkeeping/Reporting Waiver.	Yes	
§ 63.11(a)	Control Device and Work Practice Requirements—Applicability.	Yes	
§ 63.11(b)	Flares	Yes	Except that flares complying with § 63.670 are not subject to the requirements of § 63.11(b).
§ 63.11(c)-(e)	Alternative Work Practice for Monitoring Equipment for Leaks.	Yes	
§ 63.12	State Authority and Delegations.	Yes	
§ 63.13	Addresses	Yes	
§ 63.14	Incorporation by Reference	Yes	
§ 63.15	Availability of Information and Confidentiality.	Yes	
§ 63.16	Performance Track Provisions.	Yes	

■ 88. Appendix A to subpart UUU of part 63 is amended by:

■ a. Revising the first sentence of section 2.1; and

■ b. Revising section 7.1.3.

The revisions read as follows:

Appendix A to Subpart UUU of Part 63—Determination of Metal Concentration on Catalyst Particles (Instrumental Analyzer Procedure)

* * * * *

2.1 A representative sample of catalyst particles is collected, prepared, and analyzed for analyte concentration using either energy or wavelength dispersive X-ray fluorescent (XRF) spectrometry instrumental analyzers. * * *

* * * * *

7.1.3 Low-Range Calibration Standard. Concentration equivalent to 1 to 20 percent of the span. The concentration of the low-range calibration standard should be selected so that it is less than either one-fourth of the applicable concentration limit or of the lowest concentration anticipated in the catalyst samples.

* * * * *

Appendix A to Part 63—[AMENDED]

■ 89. Appendix A to part 63 is amended by adding Method 325A and Method 325B to read as follows:

Method 325A—Volatile Organic Compounds From Fugitive and Area Sources

Sampler Deployment and VOC Sample Collection

1.0 Scope and Application

1.1 This method describes collection of volatile organic compounds (VOCs) at a facility property boundary or from fugitive and area emission sources using passive (diffusive) tube samplers (PS). The concentration of airborne VOCs at or near these potential fugitive- or area-emission sources may be determined using this method in combination with Method 325B. Companion Method 325B (Sampler Preparation and Analysis) describes preparation of sampling tubes, shipment and storage of exposed sampling tubes, and analysis of sampling tubes collected using either this passive sampling procedure or alternative active (pumped) sampling methods.

1.2 This method may be used to determine the average concentration of the select VOCs and corresponding uptake rates listed in Method 325B, Table 12.1. Additional compounds or alternative sorbents must be evaluated as described in Addendum A of Method 325B unless the compound or sorbent has already been validated and reported in one of the following national/international standard methods: ISO 16017–2:2003 (incorporated by reference—see § 63.14), ASTM D6196–03(2009) (incorporated by reference—see § 63.14), or BS EN 14662–4:2005 (incorporated by reference—see § 63.14), or in the peer-reviewed open literature.

1.3 Methods 325A and 325B are valid for the measurement of benzene. Supporting literature (References 1–8) indicates that benzene can be measured by flame ionization detection or mass spectrometry over a concentration range of approximately 0.5 micrograms per cubic meter (μg/m^3) to at least 500 μg/m^3 when industry standard (3.5 inch long x 0.25 inch outside diameter (o.d.) x 5 mm inner diameter (i.d.)) stainless steel sorbent tubes packed with Carbograph 1 TD™, Carbopack B™, or Carbopack X® or equivalent are used and when samples are accumulated over a period of 14 days.

1.4 This method may be applied to screening average airborne VOC concentrations at facility property boundaries over an extended period of time using multiple sampling episodes (*e.g.,* 26 x 14-day sampling episodes). The duration of each sampling period must be 14 days.

1.5 This method requires the collection of local meteorological data (wind speed and direction, temperature, and barometric pressure). Although local meteorology is a component of this method, non-regulatory applications of this method may use regional meteorological data. Such applications risk that the results may not identify the precise source of the emissions.

2.0 Summary of the Method

2.1 *Principle of the Method.* The diffusive passive sampler collects VOC from air for a measured time period at a rate that is proportional to the concentration of vapor in the air at that location.

2.1.1 This method describes the deployment of prepared passive samplers, including determination of the number of passive samplers needed for each survey and placement of samplers along the fenceline or facility boundary depending on the size and shape of the site or linear length of the boundary.

2.1.2 The rate of sampling is specific to each compound and depends on the diffusion constants of that VOC and the sampler dimensions/characteristics as determined by prior calibration in a standard atmosphere (Reference 1).

2.1.3 The gaseous VOC target compounds migrate through a constant diffusion barrier (*e.g.,* an air gap of fixed dimensions) at the sampling end of the diffusion sampling tube and adsorb onto the sorbent.

2.1.4 Heat and a flow of inert carrier gas are then used to extract (desorb) the retained VOCs back from the sampling end of the tube and transport/transfer them to a gas chromatograph (GC) equipped with a chromatographic column to separate the VOCs and a detector to determine the quantity of target VOCs.

2.1.5 Gaseous or liquid calibration standards loaded onto the sampling ends of clean sorbent tubes must be used to calibrate the analytical equipment.

2.1.6 This method requires the use of field blanks to ensure sample integrity associated with shipment, collection, and storage of the passive samples. It also requires the use of field duplicates to validate the sampling process.

2.1.7 At the end of each sampling period, the passive samples are collected, sealed, and shipped to a laboratory for analysis of target VOCs by thermal desorption gas chromatography, as described in Method 325B.

2.2 *Application of Diffusive Sampling.*

2.2.1 This method requires deployment of passive sampling tubes on the facility fenceline or property boundaries and collection of local meteorological data. It may be used to determine average concentration of VOC at a facility fenceline or property boundaries using time integrated passive sampling (Reference 2).

2.2.2 Collecting samples and meteorological data at progressively higher frequencies may be employed to resolve shorter term concentration fluctuations and wind conditions that could introduce interfering emissions from other sources.

2.2.3 This passive sampling method provides a low cost approach to screening of fugitive or area emissions compared to active sampling methods that are based on pumped sorbent tubes or time weighted average canister sampling.

2.2.3.1 Additional passive sampling tubes may be deployed at different distances from the facility property boundary or from the geometric center of the fugitive emission source.

2.2.3.2 Additional meteorological measurements may also be collected as needed to perform preliminary gradient-based assessment of the extent of the pollution plume at ground level and the effect of ''background'' sources contributing to airborne VOC concentrations at the location.

2.2.4 Time-resolved concentration measurements coupled with time-resolved meteorological monitoring may be used to generate data needed for source apportionment procedures and mass flux calculations.

3.0 Definitions

(See also Section 3.0 of Method 325B.)

3.1 *Fenceline* means the property boundary of a facility.

3.2 *Passive sampler (PS)* means a specific type of sorbent tube (defined in this method) that has a fixed dimension air (diffusion) gap at the sampling end and is sealed at the other end.

3.3 *Passive sampling* refers to the activity of quantitatively collecting VOC on sorbent tubes using the process of diffusion.

3.4 PS_i is the annual average for all PS concentration results from location *i.*

3.5 PS_{i3} is the set of annual average concentration results for PS_i and two sorbent tubes nearest to the PS location *i.*

3.6 PS_{ip} is the concentration from the sorbent tube at location *i* for the test period or episode p.

3.7 *Retention volume* is the maximum mass of VOC that can be collected before the capacity of the sorbent is exceeded and back diffusion of the VOC from the tube occurs.

3.8 *Sampling episode* is the length of time each passive sampler is exposed during field monitoring. The sampling episode for this method is 14 days.

3.9 *Sorbent tube* (Also referred to as tube, PS tube, sorbent tube, and sampling tube) is a stainless steel or inert coated stainless steel tube. Standard PS tube dimensions for this method are 3.5-inch (89 mm) long x 0.25-inch (6.4 mm) o.d. stainless steel tubes with an i.d. of 5 mm, a cross-sectional area of 19.6 mm^2 and an air gap of 15 mm. The central portion of the tube is packed with solid adsorbent material contained between 2 x 100-mesh stainless steel gauzes and terminated with a diffusion cap at the sampling end of the tube. These axial passive samplers are installed under a protective hood during field deployment.

Note: Glass and glass- (or fused silica-) lined stainless steel sorbent tubes (typically 4 mm i.d.) are also available in various lengths to suit different makes of thermal desorption equipment, but these are rarely used for passive sampling because it is more difficult to adequately define the diffusive air gap in glass or glass-line tubing. Such tubes are not recommended for this method.

4.0 Sampling Interferences

4.1 *General Interferences.* Passive tube samplers should be sited at a distance beyond the influence of possible obstructions such as trees, walls, or buildings at the monitoring site. General guidance for siting can be found in EPA–454/B–13–003, Quality Assurance Handbook for Air Pollution Measurement Systems, Volume II: Ambient Air Quality Monitoring Program, May 2013 (Reference 3) (incorporated by reference—see § 63.14). Complex topography and physical site obstructions, such as bodies of water, hills, buildings, and other structures that may prevent access to a planned PS location must be taken into consideration. You must document and report siting interference with the results of this method.

4.2 *Background Interference.* Nearby or upwind sources of target emissions outside the facility being tested can contribute to background concentrations. Moreover, because passive samplers measure continuously, changes in wind direction can cause variation in the level of background concentrations from interfering sources during the monitoring period. This is why local meteorological information, particularly wind direction and speed, is required to be collected throughout the monitoring period. Interfering sources can include neighboring industrial facilities, transportation facilities, fueling operations, combustion sources, short-term transient sources, residential sources, and nearby highways or roads. As PS data are evaluated, the location of potential interferences with respect to PS locations and local wind conditions should be considered, especially when high PS concentration values are observed.

4.3 *Tube Handling.* You must protect the PS tubes from gross external contamination during field sampling. Analytical thermal desorption equipment used to analyze PS tubes must desorb organic compounds from the interior of PS tubes and excludes contamination from external sampler surfaces in the analytical/sample flow path. If the analytical equipment does not comply with this requirement, you must wear clean, white, cotton or powder-free nitrile gloves to handle sampling tubes to prevent contamination of the external sampler surfaces. Sampling tubes must be capped with two-piece, brass, 0.25 inch, long-term storage caps fitted with combined polytetrafluoroethylene ferrules (see Section 6.1 and Method 325B) to prevent ingress of airborne contaminants outside the sampling period. When not being used for field monitoring, the capped tubes must be stored in a clean, air-tight, shipping container to prevent the collection of VOCs (see Section 6.4.2 of Method 325B).

4.4 *Local Weather Conditions and Airborne Particulates.* Although air speeds are a constraint for many forms of passive samplers, axial tube PS devices have such a slow inherent uptake rate that they are largely immune to these effects (References 4,5). Passive samplers must nevertheless be deployed under non-emitting weatherproof hoods to moderate the effect of local weather conditions such as solar heating and rain. The cover must not impede the ingress of ambient air. Sampling tubes should also be orientated vertically and pointing downwards, to minimize accumulation of particulates.

4.5 *Temperature.* The normal working range for field sampling for sorbent packing is 0–40 °C (References 6,7). Note that most published passive uptake rate data for sorbent tubes is quoted at 20 °C. Note also that, as a rough guide, an increase in temperature of 10 °C will reduce the retention

volume (i.e., collection capacity) for a given analyte on a given sorbent packing by a factor of 2, but the uptake rate will not change significantly (Reference 4).

5.0 Safety

This method does not purport to include all safety issues or procedures needed when deploying or collecting passive sampling tubes. Precautions typical of field air sampling projects are required. Tripping, falling, electrical, and weather safety considerations must all be included in plans to deploy and collect passive sampling tubes.

6.0 Sampling Equipment and Supplies, and Pre-Deployment Planning

This section describes the equipment and supplies needed to deploy passive sampling monitoring equipment at a facility fenceline or property boundary. Details of the passive sampling tubes themselves and equipment required for subsequent analysis are described in Method 325B.

6.1 *Passive Sampling Tubes.* The industry standard PS tubes used in this method must meet the specific configuration and preparation described in Section 3.0 of this method and Section 6.1 of Method 325B.

Note: The use of PS tubes packed with various sorbent materials for monitoring a wide variety of organic compounds in ambient air has been documented in the literature (References 4–10). Other sorbents that may be used in standard passive sampling tubes for monitoring additional target compound(s) once their uptake rate and performance has been demonstrated following procedures in Addendum A to Method 325B. Guidance on sorbent selection can also be obtained from relevant national and international standard methods such as ASTM D6196–03 (2009) (Reference 14) (incorporated by reference—see § 63.14) and ISO 16017–2:2003 (Reference 13) (incorporated by reference—see § 63.14).

6.2 *Passive or Diffusive Sampling Cap.* One diffusive sampling cap is required per PS tube. The cap fits onto the sampling end of the tube during air monitoring. The other end of the tube remains sealed with the long-term storage cap. Each diffusive sampling cap is fitted with a stainless steel gauze, which defines the outer limit of the diffusion air gap.

6.3 *Sorbent Tube Protection Cover.* A simple weatherproof hood, suitable for protecting passive sampling tubes from the worst of the weather (see Section 4.4) consists of an inverted cone/funnel constructed of an inert, non-outgassing material that fits over the diffusive tube, with the open (sampling) end of the tube projecting just below the cone opening. An example is shown in Figure 6.1 (Adapted from Reference 13).

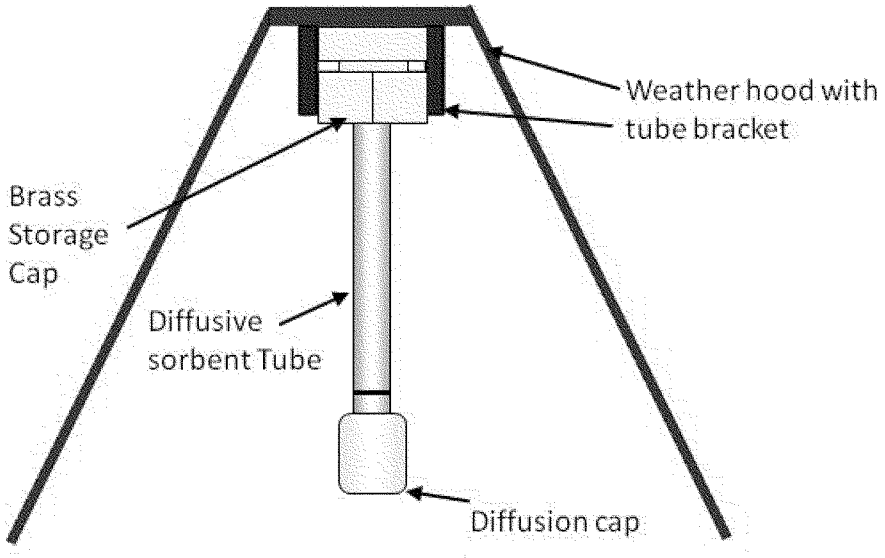

Figure 6.1. PS Tube with Weather Protector

6.4 Thermal Desorption Apparatus. If the analytical thermal desorber that will subsequently be used to analyze the passive sampling tubes does not meet the requirement to exclude outer surface contaminants from the sample flow path (see Section 6.6 of Method 325B), then clean, white, cotton or powder-free nitrile gloves must be used for handling the passive sampling tubes during field deployment.

6.5 *Sorbent Selection.* Sorbent tube configurations, sorbents or other VOC not listed in this method must be evaluated according to Method 325B, Addendum A or ISO 16017–2:2003 (Reference 13) (incorporated by reference—see § 63.14). The supporting evaluation and verification data described in Method 325B, Addendum A for configurations or compounds different from the ones described in this method must meet the performance requirements of Method 325A/B and must be submitted with the test plan for your measurement program.

7.0 Reagents and Standards

No reagents or standards are needed for the field deployment and collection of passive sampling tubes. Specifications for sorbents, gas and liquid phase standards, preloaded standard tubes, and carrier gases are covered in Section 7 of Method 325B.

8.0 Sample Deployment, Recovery, and Storage

Pre-deployment and planning steps are required before field deployment of passive sampling tubes. These activities include but are not limited to conducting a site visit, determining suitable and required monitoring locations, and determining the monitoring frequency to be used.

8.1 *Conducting the Site Visit.*

8.1.1 Determine the size and shape of the facility footprint in order to determine the required number of monitoring locations.

8.1.2 Identify obstacles or obstructions (buildings, roads, fences), hills and other terrain issues (*e.g.,* bodies of water or swamp land) that could interfere with air parcel flow to the sampler or that prevent reasonable access to the location. You may use the general guidance in Section 4.1 of this method during the site visit to identify sampling locations. You must evaluate the placement of each passive sampler to determine if the conditions in this section are met.

8.1.3 Identify to the extent possible and record potential off-site source interferences

(*e.g.,* neighboring industrial facilities, transportation facilities, fueling operations, combustion sources, short-term transient sources, residential sources, nearby highways).

8.1.4 Identify the closest available meteorological station. Identify potential locations for one or more on-site or near-site meteorological station(s) following the guidance in EPA–454/B–08–002, Quality Assurance Handbook for Air Pollution Measurement Systems, Volume IV: Meteorological Measurements, Version 2.0 (Final), March 2008 (Reference 11) (incorporated by reference—see § 63.14).

8.2 *Determining Sampling Locations (References 2, 3).*

8.2.1 The number and placement of the passive samplers depends on the size, the shape of the facility footprint or the linear distance around the facility, and the proximity of emission sources near the property boundaries. Aerial photographs or site maps may be used to determine the size (acreage) and shape of the facility or the length of the boundary. You will place passive samplers on the facility property boundary at different angles circling the geometric center of the facility based on the size of the area (or subarea) or at different distances based on the size and boundary length of the facility.

Note: In some instances, permanent air monitoring stations may already be located in close proximity to the facility. These stations may be operated and maintained by the site, or local or state regulatory agencies. If access to the station is possible, a PS may be deployed adjacent to other air monitoring instrumentation. A comparison of the pollutant concentrations measured with the PS to concentrations measured by site instrumentation may be used as an optional data quality indicator to assess the accuracy of PS.

8.2.2 *Option 1 for Determining Sampling Locations.*

8.2.2.1 For facilities with a regular (circular, triangular, rectangular, or square) shape, determine the geographic center of the facility.

8.2.2.1.1 For regularly shaped facilities with an area of less than or equal to 750 acres, measure angles around the center point of 30 degrees for a total of twelve 30 degree measurements.

8.2.2.1.2 For regularly shaped facilities covering an area greater than 750 acres but less than or equal to 1,500 acres, measure from the center point angles of 20 degrees for a total of eighteen 20 degree measurements. Figure 8.1 shows the monitor placement around the property boundary of a facility with an area between 750 and 1,500 acres. Monitor placements are represented with black dots along the property boundary.

8.2.2.1.3 For facilities covering an area greater than 1,500 acres, measure angles of 15 degrees from the center point for a total of twenty-four 15 degree measurements.

8.2.2.1.4 Place samplers securely on a pole or supporting structure at 1.5 to 3 meters above ground level at each point just beyond the intersection where the measured angle intersects the property boundary.

8.2.2.1.5 Extra samplers must be placed near known sources of VOCs at the test facility. In the case that a potential emission source is within 50 meters of the property boundary and the source location is between two monitors, measure the distance (x) between the two monitors and place another monitor halfway between (x/2) the two monitors. For example, in Figure 8.1 the facility added three additional monitors (*i.e.,* light shaded sampler locations) to provide sufficient coverage of all area sources.

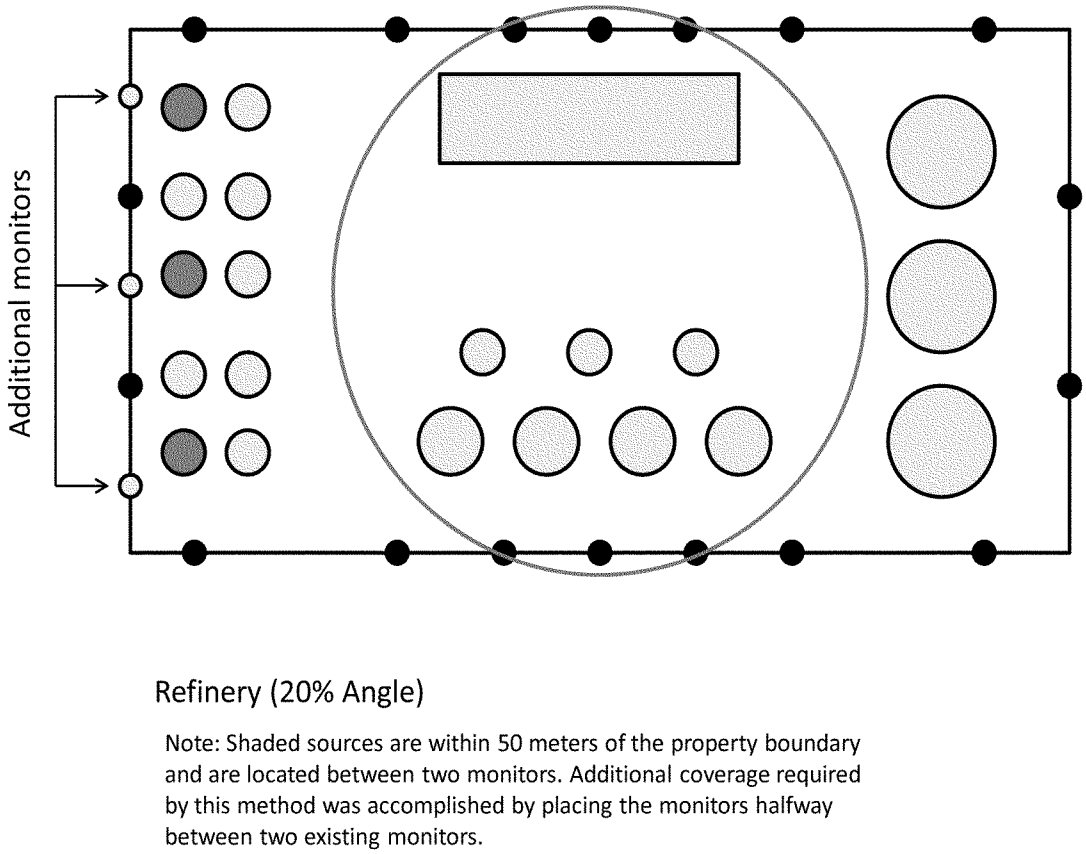

Figure 8.1. Facility with a Regular Shape Between 750 and 1,500 Acres in Area

8.2.2.2 For irregularly shaped facilities, divide the area into a set of connecting subarea circles, triangles or rectangles to determine sampling locations. The subareas must be defined such that a circle can reasonably encompass the subarea. Then

determine the geometric center point of each of the subareas.

8.2.2.2.1 If a subarea is less than or equal to 750 acres (*e.g.,* Figure 8.2), measure angles of 30 degrees from the center point for a total of twelve 30 degree measurements.

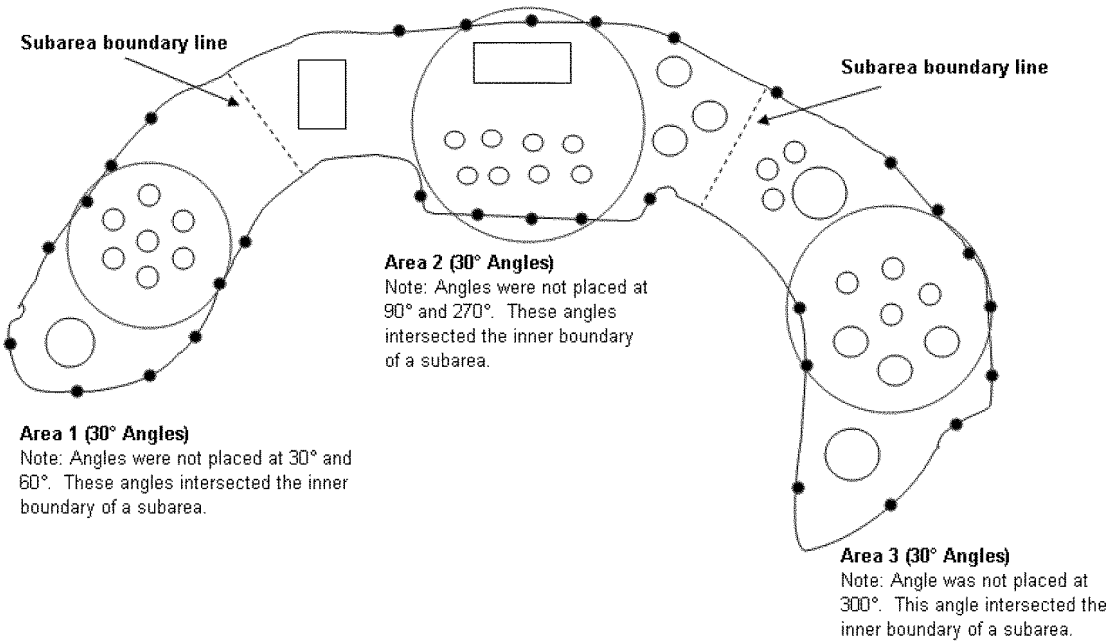

Figure 8.2. Facility Divided into Three Subareas

8.2.2.2.2 If a subarea is greater than 750 acres but less than or equal to 1,500 acres (*e.g.,* Figure 8.3), measure angles of 20 degrees from the center point for a total of eighteen 20 degree measurements.

8.2.2.2.3 If a subarea is greater than 1,500 acres, measure angles of 15 degrees from the center for a total of twenty-four 15 degree measurements.

8.2.2.3 Locate each sampling point just beyond the intersection of the measured angle and the outer property boundary.

8.2.2.4 Sampling sites are not needed at the intersection of an inner boundary with an adjacent subarea. The sampling location must be sited where the measured angle intersects more than one point along the subarea's outer boundary.

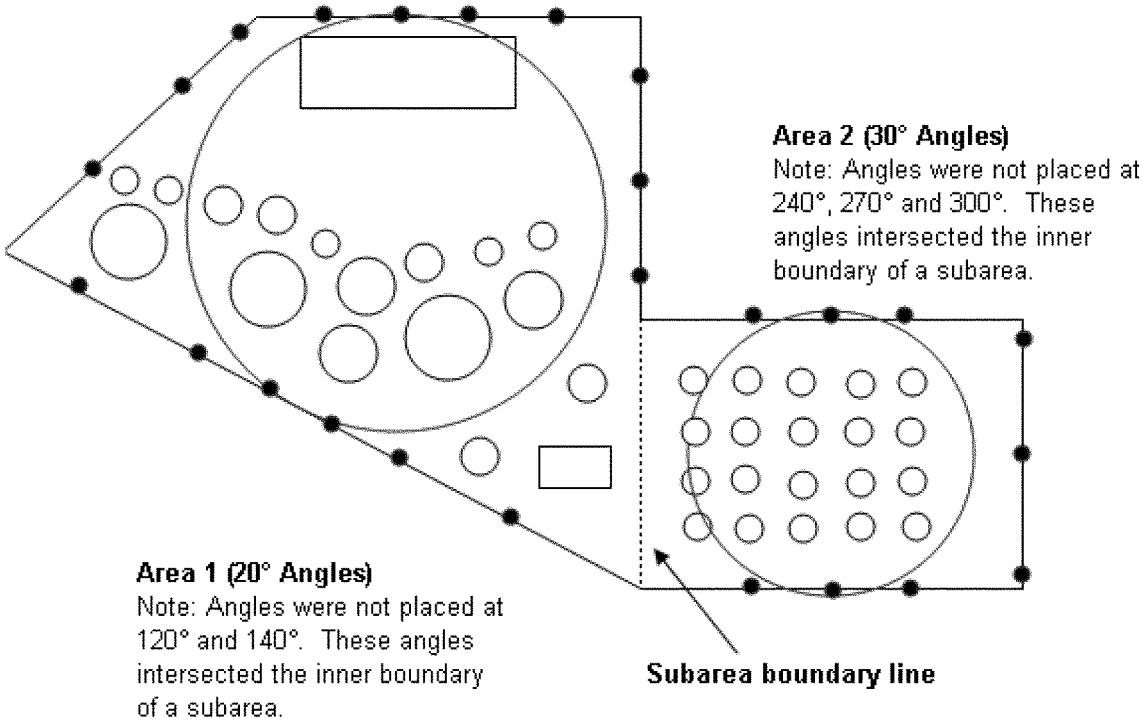

Figure 8.3. Facility Divided into Two Subareas

8.2.3 *Option 2 for Determining Sampling Locations.*

8.2.3.1 For facilities with a boundary length of less than 24,000 feet, a minimum of twelve sampling locations evenly spaced ± 10 percent of the location interval is required.

8.2.3.2 For facilities with a boundary length greater than 24,000 feet, sampling locations are spaced 2,000 ±250 feet apart.

8.2.3.4 Place samplers securely on a pole or supporting structure at 1.5 to 3 meters above ground level.

8.2.3.5 Extra samplers must be placed near known sources of VOCs at the test facility. In the case that a potential emission source is within 50 meters of the property boundary and the source location is between two monitors, measure the distance (x) between the two monitors and place another monitor halfway between (x/2) the two monitors. For example, in Figure 8.4, the facility added three additional monitors (*i.e.,* light shaded sampler locations) to provide sufficient coverage of all area sources.

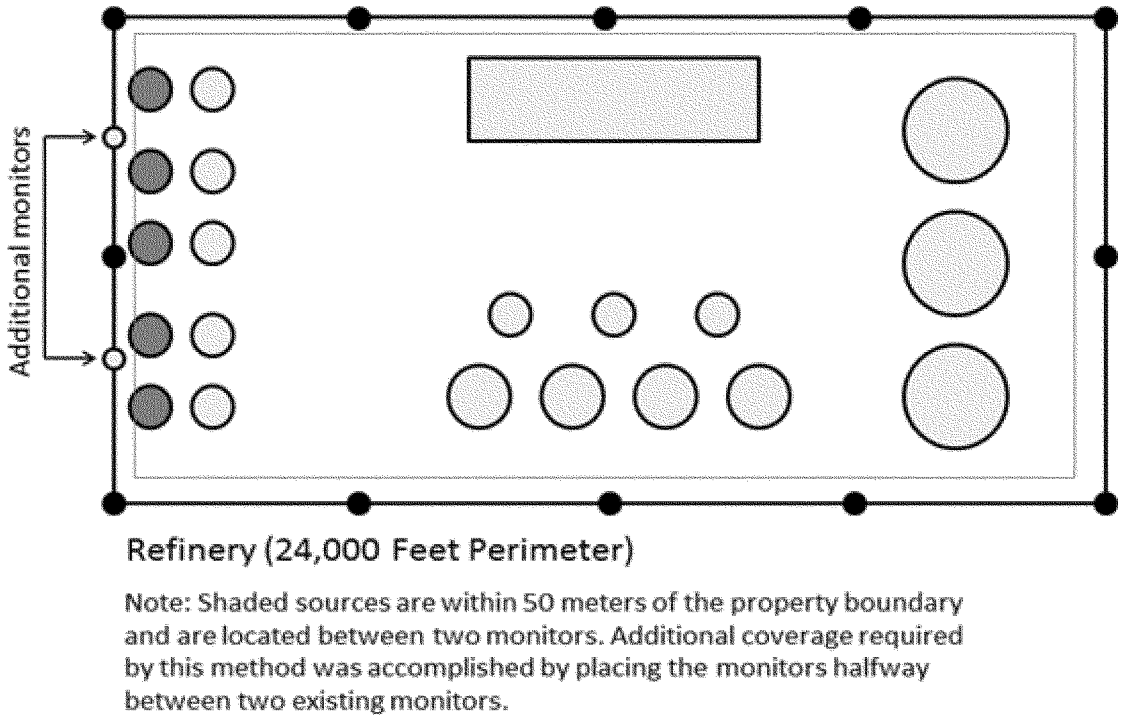

Figure 8.4. Facility with a Boundary Length of 24,000 feet

8.3 *Siting a Meteorological Station.* A dedicated meteorological station is required at or near the facility you are monitoring. A number of commercially available meteorological stations can be used. Information on meteorological instruments can be found in EPA–454/R–99–005, Meteorological Monitoring Guidance for Regulatory Modeling Applications, February 2000 (Reference 11) (incorporated by reference—see § 63.14). Some important considerations for siting of meteorological stations are detailed below.

8.3.1 Place meteorological stations in locations that represent conditions affecting the transport and dispersion of pollutants in the area of interest. Complex terrain may require the use of more than one meteorological station.

8.3.2 Deploy wind instruments over level, open terrain at a height of 10 meters. If possible, locate wind instruments at a distance away from nearby structures that is equal to at least 10 times the height of the structure.

8.3.3 Protect meteorological instruments from thermal radiation and adequately ventilate them using aspirated shields. The temperature sensor must be located at a distance away from any nearby structures that is equal to at least four times the height of the structure. Temperature sensors must be located at least 30 meters from large paved areas.

8.3.4 Collect and record meteorological data, including wind speed, wind direction, and temperature and average data on an hourly basis. Collect daily unit vector wind direction data plus average temperature and barometric pressure measurements of the sampled air to enable calculation of concentrations at standard conditions.

8.3.5 Identify and record the location of the meteorological station by its GPS coordinate.

8.4 *Monitoring Frequency.*

8.4.1 Sample collection may be performed for periods from 48 hours up to 14 days.

8.4.2 A site screening protocol that meets method requirements may be performed by collecting samples for a year where each PS accumulates VOC for a 14-day sampling period. Study results are accumulated for the sampling periods (typically 26) over the course of one calendar year. The sampling tubes must be changed at approximately the same time of day at each of the monitoring sites.

8.5 *Passive Sampler Deployment.*

8.5.1 Clean (conditioned) sorbent tubes must be prepared and packaged by the laboratory as described in Method 325B and must be deployed for sampling within 30 days of conditioning.

8.5.2 Allow the tubes to equilibrate with ambient temperature (approximately 30 minutes to 1 hour) at the monitoring location before removing them from their storage/shipping container for sample collection.

8.5.3 If there is any risk that the analytical equipment will not meet the requirement to exclude contamination on outer tube surfaces from the sample flow path (see Section 6.6 of Method 325B), sample handlers must wear clean, white, cotton or powder-free nitrile gloves during PS deployment and collection and throughout any other tube handling operations.

8.5.4 Inspect the sampling tubes immediately prior to deployment. Ensure that they are intact, securely capped, and in good condition. Any suspect tubes (*e.g.,* tubes that appear to have leaked sorbent) should be removed from the sampling set.

8.5.5 Secure passive samplers at a height of 1.5 to 2 meters above ground using a pole or other secure structure at each sampling location. Orient the PS vertically and with the sampling end pointing downward to avoid ingress of particulates.

Note: Duplicate sampling assemblies must be deployed at at least one monitoring location during each field monitoring exercise.

8.5.6 Protect the PS from rain and excessive wind velocity by placing them under the type of protective hood described in Section 6.1.3 or equivalent.

8.5.7 Remove the storage cap on the sampling end of the tube and replace it with a diffusive sampling cap at the start of the sampling period. Make sure the diffusion cap is properly seated and store the removed storage caps in the empty tube shipping container.

8.5.8 Record the start time and location details for each sampler on the field sample data sheet (see example in Section 17.0.)

8.5.9 Expose the sampling tubes for the 14-day sampling period.

8.5.10 Field blank tubes (see Section 9.3 of Method 325B) are stored outside the shipping container at representative sampling locations around the site, but with both long-term storage caps kept in place throughout the monitoring exercise. One field blank tube is required for every 10 sampled tubes on a monitoring exercise. No

less than two field blanks should be collected, regardless of the size of the monitoring study. Record the tube number(s) for the field blank(s) on the field sample data sheet.

8.6 *Sorbent Tube Recovery and Meteorological Data Collection.* Recover deployed sampling tubes and field blanks as follows:

8.6.1 After the sampling period is complete, immediately replace the diffusion end cap on each sampled tube with a long-term storage end cap. Tighten the seal securely by hand and then tighten an additional quarter turn with an appropriate tool. Record the stop date and time and any additional relevant information on the sample data sheet.

8.6.2 Place the sampled tubes, together with the field blanks, in the storage/shipping container. Label the storage container, but do not use paints, markers, or adhesive labels to identify the tubes. TD-compatible electronic (radio frequency identification (RFID)) tube labels are available commercially and are compatible with some brands of thermal desorber. If used, these may be programmed with relevant tube and sample information, which can be read and automatically transcribed into the sequence report by the TD system.

Note: Sampled tubes must not be placed in the same shipping container as clean conditioned sampling tubes.

8.6.3 Sampled tubes may be shipped at ambient temperature to a laboratory for sample analysis.

8.6.4 Specify whether the tubes are field blanks or were used for sampling and document relevant information for each tube using a Chain of Custody form (see example in Section 17.0) that accompanies the samples from preparation of the tubes through receipt for analysis, including the following information: Unique tube identification numbers for each sampled tube; the date, time, and location code for each PS placement; the date, time, and location code for each PS recovery; the GPS reference for each sampling location; the unique identification number of the duplicate sample (if applicable); and problems or anomalies encountered.

8.6.5 If the sorbent tubes are supplied with electronic (e.g., RFID) tags, it is also possible to allocate a sample identifier to each PS tube. In this case, the recommended format for the identification number of each sampled tube is AA–BB–CC–DD–VOC, where:

AA = Sequence number of placement on route (01, 02, 03 . . .)
BB = Sampling location code (01, 02, 03 . . .)
CC = 14-day sample period number (01 to 26)
DD = Sample code (SA = sample, DU = duplicate, FB = field blank)
VOC = 3-letter code for target compound(s) (*e.g.,* BNZ for benzene or BTX for benzene, toluene, and xylenes)

Note: Sampling start and end times/dates can also be logged using RFID tube tags.

8.6.6 Collect daily unit vector wind direction data plus average temperature and barometric pressure measurements to enable calculation of concentrations at standard conditions. You must supply this information to the laboratory with the samples.

9.0 Quality Control

9.1 Most quality control checks are carried out by the laboratory and associated requirements are in Section 9.0 of Method 325B, including requirements for laboratory blanks, field blanks, and duplicate samples.

9.2 Evaluate for potential outliers the laboratory results for neighboring sampling tubes collected over the same time period. A potential outlier is a result for which one or more PS tube does not agree with the trend in results shown by neighboring PS tubes—particularly when data from those locations have been more consistent during previous sampling periods. Accidental contamination by the sample handler must be documented before any result can be eliminated as an outlier. Rare but possible examples of contamination include loose or missing storage caps or contaminated storage/shipping containers. Review data from the same and neighboring monitoring locations for the subsequent sampling periods. If the anomalous result is not repeated for that monitoring location, the episode can be ascribed to transient contamination and the data in question must be flagged for potential elimination from the dataset.

9.3 *Duplicates and Field Blanks.*

9.3.1 Collect at least one co-located/duplicate sample for every 10 field samples to determine precision of the measurements.

9.3.2 Collect at least two field blanks sorbent samples per sampling period to ensure sample integrity associated with shipment, collection, and storage. You must use the entire sampling apparatus for field blanks including unopened sorbent tubes mounted in protective sampling hoods. The tube closures must not be removed. Field blanks must be placed in two different quadrants (*e.g.,* 90° and 270°) and remain at the sampling location for the sampling period.

10.0 Calibration and Standardization

Follow the calibration and standardization procedures for meteorological measurements in EPA–454/B–08–002, Quality Assurance Handbook for Air Pollution Measurement Systems, Volume IV: Meteorological Measurements, Version 2.0 (Final), March 2008 (Reference 11) (incorporated by reference—see § 63.14). Refer to Method 325B for calibration and standardization procedures for analysis of the passive sampling tubes.

11.0 Analytical Procedures

Refer to Method 325B, which provides details for the preparation and analysis of sampled passive monitoring tubes (preparation of sampling tubes, shipment and storage of exposed sampling tubes, and analysis of sampling tubes).

12.0 Data Analysis, Calculations and Documentation

12.1 *Calculate Annual Average Fenceline Concentration.* After a year's worth of sampling at the facility fenceline (for example, 26 14-day samples), the average (PS_i) can be calculated for any specified period at each PS location using Equation 12.1.

$$PS_i = \frac{\sum PS_{ip}}{N} \qquad \text{Eq. 12.1}$$

Where:

PS_i = Annual average for location *i.*
PS_{ip} = Sampling period specific concentration from Method 325B.
i = Location of passive sampler (0 to 360°).
p = The sampling period.
N = The number of sampling periods in the year (*e.g.,* for 14-day sampling periods, from 1 to 26).

Note: PS_{ip} is a function of sampling location-specific factors such as the contribution from facility sources, unusual localized meteorological conditions, contribution from nearby interfering sources, the background caused by integrated far-field sources and measurement error due to deployment, handling, siting, or analytical errors.

12.2 *Identify Sampling Locations of Interest.* If data from neighboring sampling locations are significantly different, then you may add extra sampling points to isolate background contributions or identify facility-specific ''hot spots.''

12.3 *Evaluate Trends.* You may evaluate trends and patterns in the PS data over multiple sampling episodes to determine if elevated concentrations of target compounds are due to operations on the facility or if contributions from background sources are significant.

12.3.1 Obtain meteorological data including wind speed and wind direction or unit vector wind data from the on-site meteorological station. Use this meteorological data to determine the prevailing wind direction and speed during the periods of elevated concentrations.

12.3.2 As an option you may perform preliminary back trajectory calculations (*http://ready.arl.noaa.gov/HYSPLIT.php*) to aid in identifying the source of the background contribution to elevated target compound concentrations.

12.3.3 Information on published or documented events on- and off-site may also be included in the associated sampling episode report to explain elevated concentrations if relevant. For example, you

would describe if there was a chemical spill on site, or an accident on an adjacent road.

12.3.4 Additional monitoring for shorter periods may be necessary to allow better discrimination/resolution of contributing emission sources if the measured trends and associated meteorology do not provide a clear assessment of facility contribution to the measured fenceline concentration.

13.0 Method Performance

Method performance requirements are described in Method 325B.

14.0 Pollution Prevention

[Reserved]

15.0 Waste Management

[Reserved]

16.0 References

1. Ambient air quality—Standard method for measurement of benzene concentrations—Part 4: Diffusive sampling followed by thermal desorption and gas chromatography, BS EN 14662–4:2005.
2. Thoma, E.D., Miller, C.M., Chung, K.C., Parsons, N.L. and Shine, B.C. Facility Fence Line Monitoring using Passive Samplers, J. Air & Waste Mange. Assoc. 2011, 61:834–842.
3. Quality Assurance Handbook for Air Pollution Measurement Systems, Volume II: Ambient Air Quality Monitoring Program, EPA–454/B–13–003, May 2013. Available at *http://www.epa.gov/ttnamti1/files/ambient/pm25/qa/QA-Handbook-Vol-II.pdf.*
4. Brown, R.H., Charlton, J. and Saunders, K.J.: The development of an improved diffusive sampler. Am. Ind. Hyg. Assoc. J. 1981, 42(12): 865–869.
5. Brown, R. H. Environmental use of diffusive samplers: evaluation of reliable diffusive uptake rates for benzene, toluene and xylene. J. Environ. Monit. 1999, 1 (1), 115–116.
6. Ballach, J.; Greuter, B.; Schultz, E.; Jaeschke, W. Variations of uptake rates in benzene diffusive sampling as a function of ambient conditions. Sci. Total Environ. 1999, 244, 203–217.
7. Brown, R. H. Monitoring the ambient environment with diffusive samplers: theory and practical considerations. J Environ. Monit. 2000, 2(1), 1–9.
8. Buzica, D.; Gerboles, M.; Plaisance, H. The equivalence of diffusive samplers to reference methods for monitoring O_3, benzene and NO_2 in ambient air. J. Environ. Monit. 2008, 10 (9), 1052–1059.
9. Woolfenden, E. Sorbent-based sampling methods for volatile and semi-volatile organic compounds in air. Part 2. Sorbent selection and other aspects of optimizing air monitoring methods. J. Chromatogr. A 2010, 1217, (16), 2685–94.
10. Pfeffer, H. U.; Breuer, L. BTX measurements with diffusive samplers in the vicinity of a cokery: Comparison between ORSA-type samplers and pumped sampling. J. Environ. Monit. 2000, 2 (5), 483–486.
11. US EPA. 2000. Meteorological Monitoring Guidance for Regulatory Modeling Applications. EPA–454/R–99–005. Office of Air Quality Planning and Standards, Research Triangle Park, NC. February 2000. Available at *http://www.epa.gov/scram001/guidance/met/mmgrma.pdf.*
12. Quality Assurance Handbook for Air Pollution Measurement Systems. Volume IV: Meteorological Measurements Version 2.0 Final, EPA–454/B–08–002 March 2008. Available at *http://www.epa.gov/ttnamti1/files/ambient/met/Volume%20IV_Meteorological_Measurements.pdf.*
13. ISO 16017–2:2003, Indoor, ambient and workplace air—Sampling and analysis of volatile organic compounds by sorbent tube/thermal desorption/capillary gas chromatography. Part 2: Diffusive sampling.
14. ASTM D6196–03(2009): Standard practice for selection of sorbents, sampling, and thermal desorption analysis procedures for volatile organic compounds in air.

17.0 Tables, Diagrams, Flowcharts and Validation Data

Method 325 A/B

EXAMPLE FIELD TEST DATA SHEET (FTDS) AND CHAIN OF CUSTODY

I. GENERAL INFORMATION

SITE NAME:

_____

SITE LOCATION ADDRESS:

_____

CITY: _____ STATE: _____ ZIP: _____

II. SAMPLING DATA

Sample ID (Tube) #	Sorbent	Sample or blank	Start Date	Start Time	Stop Date	Stop Time	Location (gps)	Ambient Temp. (°F)	Barometric Pressure (in. Hg)

III. CUSTODY INFORMATION

COLLECTED BY: _____

Relinquished to Shipper -

Name: _____ Date: _____ Time _____

Received by Laboratory -

Name _____ Date: _____ Time _____

Sample condition upon receipt:

_____

Analysis Required:

_____

_____

Comments:

_____

_____

_____

Figure 17.1. Example Field Data Form and Chain of Custody

Method 325B—Volatile Organic Compounds From Fugitive and Area Sources

Sampler Preparation and Analysis

1.0 Scope and Application

1.1 This method describes thermal desorption/gas chromatography (TD/GC) analysis of volatile organic compounds (VOCs) from fugitive and area emission sources collected onto sorbent tubes using passive sampling. It could also be applied to the TD/GC analysis of VOCs collected using active (pumped) sampling onto sorbent tubes. The concentration of airborne VOCs at or near potential fugitive- or area-emission sources may be determined using this method in combination with Method 325A. Companion Method 325A (Sampler Deployment and VOC Sample Collection) describes procedures for deploying the sorbent tubes and passively collecting VOCs.

1.2 The preferred GC detector for this method is a mass spectrometer (MS), but flame ionization detectors (FID) may also be used. Other conventional GC detectors such as electron capture (ECD), photoionization (PID), or flame photometric (FPD) may also be used if they are selective and sensitive to the target compound(s) and if they meet the method performance criteria provided in this method.

1.3 There are 97 VOCs listed as hazardous air pollutants in Title III of the Clean Air Act Amendments of 1990. Many of these VOC are candidate compounds for this method. Compounds with known uptake rates for Carbopack X or equivalent are listed in Table 12.1. This method provides performance criteria to demonstrate acceptable performance of the method (or modifications of the method) for monitoring a given compound or set of the compounds listed in Table 12.1. If standard passive sampling tubes are packed with other sorbents or used for other analytes than those listed in Table 12.1, then method performance and relevant uptake rates should be verified according to Appendix A to this method unless the compound or sorbent has already been validated and reported in one of the following national/international standard methods: ISO 16017–2:2003(incorporated by reference—see § 63.14), ASTM D6196–03(2009) (incorporated by reference—see § 63.14), or BS EN 14662–4:2005 (incorporated by reference—see § 63.14), or in the peer-reviewed open literature.

1.4 The analytical approach using TD/GC/MS is based on previously published EPA guidance in Compendium Method TO–17 (*http://www.epa.gov/ttnamti1/airtox.html#compendium*) (Reference 1), which describes active (pumped) sampling of VOCs from ambient air onto tubes packed with thermally stable adsorbents.

1.5 Inorganic gases not suitable for analysis by this method include oxides of carbon, nitrogen and sulfur, ozone (O_3), and other diatomic permanent gases. Other pollutants not suitable for this analysis method include particulate pollutants, (*i.e.,* fumes, aerosols, and dusts), compounds too labile (reactive) for conventional GC analysis, and VOCs that are more volatile than propane.

2.0 Summary of Method

2.1 This method provides procedures for the preparation, conditioning, blanking, and shipping of sorbent tubes prior to sample collection.

2.2 Laboratory and field personnel must have experience of sampling trace-level VOCs using sorbent tubes (References 2, 5) and must have experience operating thermal desorption/GC/multi-detector instrumentation.

2.3 Key steps of this method as implemented for each sample tube include: Stringent leak testing under stop flow, recording ambient temperature conditions, adding internal standards, purging the tube, thermally desorping the sampling tube, refocusing on a focusing trap, desorping and transferring/injecting the VOCs from the secondary trap into the capillary GC column for separation and analysis.

2.4 Water management steps incorporated into this method include: (a) selection of hydrophobic sorbents in the sampling tube; (b) optional dry purging of sample tubes prior to analysis; and (c) additional selective elimination of water during primary (tube) desorption (if required) by selecting trapping sorbents and temperatures such that target compounds are quantitatively retained while water is purged to vent.

3.0 Definitions

(See also Section 3.0 of Method 325A).

3.1 *Blanking* is the desorption and confirmatory analysis of conditioned sorbent tubes before they are sent for field sampling.

3.2 *Breakthrough volume and associated relation to passive sampling.* Breakthrough volumes, as applied to active sorbent tube sampling, equate to the volume of air containing a constant concentration of analyte that may be passed through a sorbent tube at a given temperature before a detectable level (5 percent) of the input analyte concentration elutes from the tube. Although breakthrough volumes are directly related to active rather than passive sampling, they provide a measure of the strength of the sorbent-sorbate interaction and therefore also relate to the efficiency of the passive sampling process. The best direct measure of passive sampling efficiency is the stability of the uptake rate. Quantitative passive sampling is compromised when back diffusion becomes significant—*i.e.,* when the concentration of a target analyte immediately above the sorbent sampling surface no longer approximates to zero. This causes a reduction in the uptake rate over time. If the uptake rate for a given analyte on a given sorbent tube remains relatively constant—*i.e.,* if the uptake rate determined for 48 hours is similar to that determined for 7 or 14 days—the user can be confident that passive sampling is occurring at a constant rate. As a general rule of thumb, such ideal passive sampling conditions typically exist for analyte:sorbent combinations where the breakthrough volume exceeds 100 L (Reference 4).

3.3 *Calibration verification sample.* Single level calibration samples run periodically to confirm that the analytical system continues to generate sample results within acceptable agreement to the current calibration curve.

3.4 *Focusing trap* is a cooled, secondary sorbent trap integrated into the analytical thermal desorber. It typically has a smaller i.d. and lower thermal mass than the original sample tube allowing it to effectively refocus desorbed analytes and then heat rapidly to ensure efficient transfer/injection into the capillary GC analytical column.

3.5 *High Resolution Capillary Column Chromatography* uses fused silica capillary columns with an inner diameter of 320 µm or less and with a stationary phase film thickness of 5 µm or less.

3.6 *h* is time in hours.

3.7 *i.d.* is inner diameter.

3.8 *min* is time in minutes.

3.9 *MS–SCAN* is the mode of operation of a GC quadrupole mass spectrometer detector that measures all ions over a given mass range over a given period of time.

3.10 *MS–SIM* is the mode of operation of a GC quadrupole mass spectrometer detector that measures only a single ion or a selected number of discrete ions for each analyte.

3.11 *o.d.* is outer diameter.

3.12 *ppbv* is parts per billion by volume.

3.13 *Retention volume* is the volume of gas required to move an analyte vapor plug through the sorbent tube at a given temperature during active (pumped) sampling. Note that retention volume provides another measure of the strength of sorbent:sorbate (analyte) affinity and is closely related to breakthrough volume—See discussion in Section 3.2 above.

3.14 *Thermal desorption* is the use of heat and a flow of inert (carrier) gas to extract volatiles from a solid matrix. No solvent is required.

3.15 *Total ion chromatogram* is the chromatogram produced from a mass spectrometer detector collecting full spectral information.

3.16 *Two-stage thermal desorption* is the process of thermally desorbing analytes from a sorbent tube, reconcentrating them on a focusing trap (see Section 3.4), which is then itself rapidly heated to ''inject'' the concentrated compounds into the GC analyzer.

3.17 *VOC* means volatile organic compound.

4.0 Analytical Interferences

4.1 *Interference from Sorbent Artifacts.* Artifacts may include target analytes as well as other VOC that co-elute chromatographically with the compounds of interest or otherwise interfere with the identification or quantitation of target analytes.

4.1.1 Sorbent decomposition artifacts are VOCs that form when sorbents degenerate, *e.g.,* when exposed to reactive species during sampling. For example, benzaldehyde, phenol, and acetophenone artifacts are reported to be formed via oxidation of the polymer Tenax® when sampling high concentration (100–500 ppb) ozone atmospheres (Reference 5).

4.1.2 Preparation and storage artifacts are VOCs that were not completely cleaned from the sorbent tube during conditioning or that are an inherent feature of that sorbent at a given temperature.

4.2 *Humidity.* Moisture captured during sampling can interfere with VOC analysis.

Passive sampling using tubes packed with hydrophobic sorbents, like those described in this method, minimizes water retention. However, if water interference is found to be an issue under extreme conditions, one or more of the water management steps described in Section 2.4 can be applied.

4.3 *Contamination from Sample Handling.* The type of analytical thermal desorption equipment selected should exclude the possibility of outer tube surface contamination entering the sample flow path (see Section 6.6). If the available system does not meet this requirement, sampling tubes and caps must be handled only while wearing clean, white cotton or powder free nitrile gloves to prevent contamination with body oils, hand lotions, perfumes, etc.

5.0 Safety

5.1 This method does not address all of the safety concerns associated with its use. It is the responsibility of the user of this standard to establish appropriate field and laboratory safety and health practices prior to use.

5.2 Laboratory analysts must exercise extreme care in working with high-pressure gas cylinders.

5.3 Due to the high temperatures involved, operators must use caution when conditioning and analyzing tubes.

6.0 Equipment and Supplies

6.1 *Tube Dimensions and Materials.* The sampling tubes for this method are 3.5-inches (89 mm) long, ¼ inch (6.4 mm) o.d., and 5 mm i.d. passive sampling tubes (see Figure 6.1). The tubes are made of inert-coated stainless steel with the central section (up to 60 mm) packed with sorbent, typically supported between two 100 mesh stainless steel gauze. The tubes have a cross sectional area of 19.6 square mm (5 mm i.d.). When used for passive sampling, these tubes have an internal diffusion (air) gap (DG) of 1.5 cm between the sorbent retaining gauze at the sampling end of the tube, and the gauze in the diffusion cap.

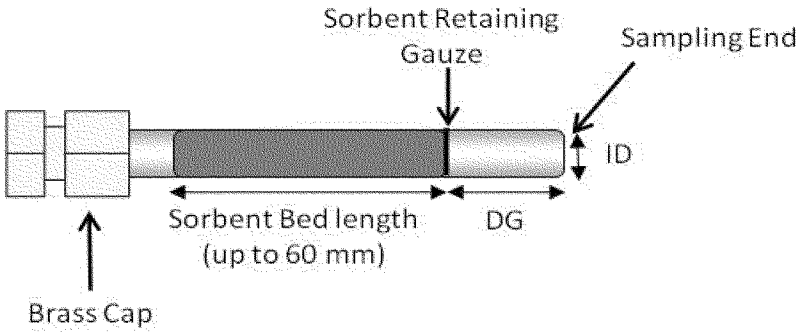

Figure 6.1. Cross Section View of Passive Sorbent Tube

6.2 *Tube Conditioning Apparatus.*

6.2.1 Freshly packed or newly purchased tubes must be conditioned as described in Section 9 using an appropriate dedicated tube conditioning unit or the thermal desorber. Note that the analytical TD system should only be used for tube conditioning only if it supports a dedicated tube conditioning mode in which effluent from contaminated tubes is directed to vent without passing through key parts of the sample flow path such as the focusing trap.

6.2.2 Dedicated tube conditioning units must be leak-tight to prevent air ingress, allow precise and reproducible temperature selection (±5 °C), offer a temperature range at least as great as that of the thermal desorber, and support inert gas flows in the range up to 100 mL/min.

Note: For safety and to avoid laboratory contamination, effluent gases from freshly packed or highly contaminated tubes should be passed through a charcoal filter during the conditioning process to prevent desorbed VOCs from polluting the laboratory atmosphere.

6.3 *Tube Labeling.*

6.3.1 Label the sample tubes with a unique permanent identification number and an indication of the sampling end of the tube. Labeling options include etching and TD-compatible electronic (radio frequency identification (RFID)) tube labels.

6.3.2 To avoid contamination, do not make ink markings of any kind on clean sorbent tubes or apply adhesive labels.

Note: TD-compatible electronic (RFID) tube labels are available commercially and are compatible with some brands of thermal desorber. If used, these may be programmed with relevant tube and sample information, which can be read and automatically transcribed into the sequence report by the TD system (see Section 8.6 of Method 325A).

6.4 *Blank and Sampled Tube Storage Apparatus.*

6.4.1 Long-term storage caps. Seal clean, blank and sampled sorbent tubes using inert, long-term tube storage caps comprising non-greased, 2-piece, 0.25-inch, metal SwageLok®-type screw caps fitted with combined polytetrafluoroethylene ferrules.

6.4.2 Storage and transportation containers. Use clean glass jars, metal cans or rigid, non-emitting polymer boxes.

Note: You may add a small packet of new activated charcoal or charcoal/silica gel to the shipping container for storage and transportation of batches of conditioned sorbent tubes prior to use. Coolers without ice packs make suitable shipping boxes for containers of tubes because the coolers help to insulate the samples from extreme temperatures (*e.g.,* if left in a parked vehicle).

6.5 *Unheated GC Injection Unit for Loading Standards onto Blank Tubes.* A suitable device has a simple push fit or finger-tightening connector for attaching the sampling end of blank sorbent tubes without damaging the tube. It also has a means of controlling carrier gas flow through the injector and attached sorbent tube at 50–100 ml/min and includes a low emission septum cap that allows the introduction of gas or liquid standards via appropriate syringes. Reproducible and quantitative transfer of higher boiling compounds in liquid standards is facilitated if the injection unit allows the tip of the syringe to just touch the sorbent retaining gauze inside the tube.

6.6 *Thermal Desorption Apparatus.* The manual or automated thermal desorption system must heat sorbent tubes while a controlled flow of inert (carrier) gas passes through the tube and out of the sampling end. The apparatus must also incorporate a focusing trap to quantitatively refocus compounds desorbed from the tube. Secondary desorption of the focusing trap should be fast/efficient enough to transfer the compounds into the high resolution capillary GC column without band broadening and without any need for further pre- or on-column focusing. Typical TD focusing traps comprise small sorbent traps (Reference 16) that are electrically-cooled using multistage Peltier cells (References 17, 18). The direction of gas flow during trap desorption should be the reverse of that used for focusing to extend the compatible analyte volatility range. Closed cycle coolers offer another cryogen-free trap cooling option. Other TD system requirements and operational stages are described in Section 11 and in Figures 17–2 through 17–4.

6.7 *Thermal Desorber—GC Interface.*

6.7.1 The interface between the thermal desorber and the GC must be heated uniformly and the connection between the transfer line insert and the capillary GC analytical column itself must be leak tight.

6.7.2 A portion of capillary column can alternatively be threaded through the heated transfer line/TD interface and connected directly to the thermal desorber.

Note: Use of a metal syringe-type needle or unheated length of fused silica pushed

through the septum of a conventional GC injector is not permitted as a means of interfacing the thermal desorber to the chromatograph. Such connections result in cold spots, cause band broadening and are prone to leaks.

6.8 *GC/MS Analytical Components.*

6.8.1 The GC system must be capable of temperature programming and operation of a high resolution capillary column. Depending on the choice of column (*e.g.,* film thickness) and the volatility of the target compounds, it may be necessary to cool the GC oven to subambient temperatures (*e.g.,* −50 °C) at the start of the run to allow resolution of very volatile organic compounds.

6.8.2 All carrier gas lines supplying the GC must be constructed from clean stainless steel or copper tubing. Non-polytetrafluoroethylene thread sealants. Flow controllers, cylinder regulators, or other pneumatic components fitted with rubber components are not suitable.

6.9 *Chromatographic Columns.* High-resolution, fused silica or equivalent capillary columns that provide adequate separation of sample components to permit identification and quantitation of target compounds must be used.

Note: 100-percent methyl silicone or 5-percent phenyl, 95-percent methyl silicone fused silica capillary columns of 0.25- to 0.32-mm i.d. of varying lengths and with varying thicknesses of stationary phase have been used successfully for non-polar and moderately polar compounds. However, given the diversity of potential target lists, GC column choice is left to the operator, subject to the performance criteria of this method.

6.10 *Mass Spectrometer.* Linear quadrupole, magnetic sector, ion trap or time-of-flight mass spectrometers may be used provided they meet specified performance criteria. The mass detector must be capable of collecting data from 35 to 300 atomic mass units (amu) every 1 second or less, utilizing 70 volts (nominal) electron energy in the electron ionization mode, and producing a mass spectrum that meets all the instrument performance acceptance criteria in Section 9 when 50 ηg or less of p-bromofluorobenzene is analyzed.

7.0 Reagents and Standards

7.1 *Sorbent Selection.*

7.1.1 Use commercially packed tubes meeting the requirements of this method or prepare tubes in the laboratory using sieved sorbents of particle size in the range 20 to 80 mesh that meet the retention and quality control requirements of this method.

7.1.2 This passive air monitoring method can be used without the evaluation specified in Addendum A if the type of tubes described in Section 6.1 are packed with 4–6 cm (typically 400–650 mg) of the sorbents listed in Table 12.1 and used for the respective target analytes.

Note: Although Carbopack X is the optimum sorbent choice for passive sampling of 1,3-butadiene, recovery of compounds with vapor pressure lower than benzene may be difficult to achieve without exceeding sorbent maximum temperature limitations (see Table 8.1). See ISO 16017–2:2003 (incorporated by reference—see § 63.14) or ASTM D6196–03(2009) (incorporated by reference—see § 63.14) for more details on sorbent choice for air monitoring using passive sampling tubes.

7.1.3 If standard passive sampling tubes are packed with other sorbents or used for analytes other than those tabulated in Section 12.0, method performance and relevant uptake rates should be verified according to Addendum A to this method unless the compound or sorbent has already been validated and reported in one of the following national/international standard methods: ISO 16017–2:2003 (incorporated by reference—see § 63.14), ASTM D6196–03(2009) (incorporated by reference—see § 63.14), or BS EN 14662–4:2005 (incorporated by reference—see § 63.14)—or in the peer-reviewed open literature. A summary table and the supporting evaluation data demonstrating the selected sorbent meets the requirements in Addendum A to this method must be submitted to the regulatory authority as part of a request to use an alternative sorbent.

7.1.4 Passive (diffusive) sampling and thermal desorption methods that have been evaluated at relatively high atmospheric concentrations (*i.e.,* mid-ppb to ppm) and published for use in workplace air and industrial/mobile source emissions testing (References 9–20) may be applied to this procedure. However, the validity of any shorter term uptake rates must be verified and adjusted if necessary for the longer monitoring periods required by this method by following procedures described in Addendum A to this method.

7.1.5 Suitable sorbents for passive sampling must have breakthrough volumes of at least 20 L (preferably >100 L) for the compounds of interest and must quantitatively release the analytes during desorption without exceeding maximum temperatures for the sorbent or instrumentation.

7.1.6 Repack/replace the sorbent tubes or demonstrate tube performance following the requirements in Addendum A to this method at least yearly or every 50 uses, whichever occurs first.

7.2 *Gas Phase Standards.*

7.2.1 Static or dynamic standard atmospheres may be used to prepare calibration tubes and/or to validate passive sampling uptake rates and can be generated from pure chemicals or by diluting concentrated gas standards. The standard atmosphere must be stable at ambient pressure and accurate to ±10 percent of the target gas concentration. It must be possible to maintain standard atmosphere concentrations at the same or lower levels than the target compound concentration objectives of the test. Test atmospheres used for validation of uptake rates must also contain at least 35 percent relative humidity.

Note: Accurate, low-(ppb-) level gas-phase VOC standards are difficult to generate from pure materials and may be unstable depending on analyte polarity and volatility. Parallel monitoring of vapor concentrations with alternative methods, such as pumped sorbent tubes or sensitive/selective on-line detectors, may be necessary to minimize uncertainty. For these reasons, standard atmospheres are rarely used for routine calibration.

7.2.2 Concentrated, pressurized gas phase standards. Accurate (±5 percent or better), concentrated gas phase standards supplied in pressurized cylinders may also be used for calibration. The concentration of the standard should be such that a 0.5–5.0 mL volume contains approximately the same mass of analytes as will be collected from a typical air sample.

7.2.3 Follow manufacturer's guidelines concerning storage conditions and recertification of the concentrated gas phase standard. Gas standards must be recertified a minimum of once every 12 months.

7.3 *Liquid Standards.* Target analytes can also be introduced to the sampling end of sorbent tubes in the form of liquid calibration standards.

7.3.1 The concentration of liquid standards must be such that an injection of 0.5–2 µl of the solution introduces the same mass of target analyte that is expected to be collected during the passive air sampling period.

7.3.2 *Solvent Selection.* The solvent selected for the liquid standard must be pure (contaminants <10 percent of minimum analyte levels) and must not interfere chromatographically with the compounds of interest.

7.3.3 If liquid standards are sourced commercially, follow manufacturer's guidelines concerning storage conditions and shelf life of unopened and opened liquid stock standards.

Note: Commercial VOC standards are typically supplied in volatile or non-interfering solvents such as methanol.

7.3.4 Working standards must be stored at 6 °C or less and used or discarded within two weeks of preparation.

7.4 *Gas Phase Internal Standards.*

7.4.1 Gas-phase deuterated or fluorinated organic compounds may be used as internal standards for MS-based systems.

7.4.2 Typical compounds include deuterated toluene, perfluorobenzene and perfluorotoluene.

7.4.3 Use multiple internal standards to cover the volatility range of the target analytes.

7.4.4 Gas-phase standards must be obtained in pressurized cylinders and containing vendor certified gas concentrations accurate to ±5 percent. The concentration should be such that the mass of internal standard components introduced is similar to those of the target analytes collected during field monitoring.

7.5 *Preloaded Standard Tubes.* Certified, preloaded standard tubes, accurate within ±5 percent for each analyte at the microgram level and ±10 percent at the nanogram level, are available commercially and may be used for auditing and quality control purposes. (See Section 9.5 for audit accuracy evaluation criteria.) Certified preloaded tubes may also be used for routine calibration.

Note: Proficiency testing schemes are also available for TD/GC/MS analysis of sorbent tubes preloaded with common analytes such as benzene, toluene, and xylene.

7.6 *Carrier Gases.* Use inert, 99.999-percent or higher purity helium as carrier

gas. Oxygen and organic filters must be installed in the carrier gas lines supplying the analytical system according to the manufacturer's instructions. Keep records of filter and oxygen scrubber replacement.

8.0 Sorbent Tube Handling (Before and After Sampling)

8.1 *Sample Tube Conditioning.*

8.1.1 Sampling tubes must be conditioned using the apparatus described in Section 6.2.

8.1.2 New tubes should be conditioned for 2 hours to supplement the vendor's conditioning procedure. Recommended temperatures for tube conditioning are given in Table 8.1.

8.1.3 After conditioning, the blank must be verified on each new sorbent tube and on 10 percent of each batch of reconditioned tubes. See Section 9.0 for acceptance criteria.

TABLE 8.1—EXAMPLE SORBENT TUBE CONDITIONING PARAMETERS

Sampling sorbent	Maximum temperature (°C)	Conditioning temperature (°C)	Carrier gas flow rate
Carbotrap C®	>400	350	100 mL/min.
Carbopack C®			
Anasorb® GCB2			
Carbograph 1 TD			
Carbotrap®			
Carbopack B®			
Anasorb® GCB1			
Tenax® TA	350	330	100 mL/min.
Carbopack® X			

8.2 *Capping, Storage and Shipment of Conditioned Tubes.*

8.2.1 Conditioned tubes must be sealed using long-term storage caps (see Section 6.4) pushed fully down onto both ends of the PS sorbent tube, tightened by hand and then tighten an additional quarter turn using an appropriate tool.

8.2.2 The capped tubes must be kept in appropriate containers for storage and transportation (see Section 6.4.2). Containers of sorbent tubes may be stored and shipped at ambient temperature and must be kept in a clean environment.

8.2.3 You must keep batches of capped tubes in their shipping boxes or wrap them in uncoated aluminum foil before placing them in their storage container, especially before air freight, because the packaging helps hold caps in position if the tubes get very cold.

8.3 *Calculating the Number of Tubes Required for a Monitoring Exercise.*

8.3.1 Follow guidance given in Method 325A to determine the number of tubes required for site monitoring.

8.3.2 The following additional samplers will also be required: Laboratory blanks as specified in Section 9.3.2 (two per sampling episode minimum), field blanks as specified in Section 9.3.4 (two per sampling episode minimum), calibration verification tubes as specified in Section 10.9.4. (at least one per analysis sequence or every 24 hours), and paired (duplicate) samples as specified in Section 9.4 (at least one pair of duplicate samples is required for every 10 sampling locations during each monitoring period).

8.4 *Sample Collection.*

8.4.1 Allow the tubes to equilibrate with ambient temperature (approximately 30 minutes to 1 hour) at the monitoring location before removing them from their storage/shipping container for sample collection.

8.4.2 Tubes must be used for sampling within 30 days of conditioning (Reference 4).

8.4.3 During field monitoring, the long-term storage cap at the sampling end of the tube is replaced with a diffusion cap and the whole assembly is arranged vertically, with the sampling end pointing downward, under a protective hood or shield—See Section 6.1 of Method 325A for more details.

8.5 *Sample Storage.*

8.5.1 After sampling, tubes must be immediately resealed with long-term storage caps and placed back inside the type of storage container described in Section 6.4.2.

8.5.2 Exposed tubes may not be placed in the same container as clean tubes. They should not be taken back out of the container until ready for analysis and after they have had time to equilibrate with ambient temperature in the laboratory.

8.5.3 Sampled tubes must be inspected before analysis to identify problems such as loose or missing caps, damaged tubes, tubes that appear to be leaking sorbent or container contamination. Any and all such problems must be documented together with the unique identification number of the tube or tubes concerned. Affected tubes must not be analyzed but must be set aside.

8.5.4 Intact tubes must be analyzed within 30 days of the end of sample collection (within one week for limonene, carene, bis-chloromethyl ether, labile sulfur or nitrogen-containing compounds, and other reactive VOCs).

Note: Ensure ambient temperatures stay below 23 °C during transportation and storage. Refrigeration is not normally required unless the samples contain reactive compounds or cannot be analyzed within 30 days. If refrigeration is used, the atmosphere inside the refrigerator must be clean and free of organic solvents.

9.0 Quality Control

9.1 *Analytical System Blank.* The analytical system must be demonstrated to be contaminant free by carrying out an analysis without a sorbent tube—*i.e.,* by desorbing an empty tube or by desorbing the focusing trap alone. Since no internal standards can be added directly to the empty tube, the system blank must have less than or equal to 0.2 ppbv or three times the detection limit for each target compound, whichever is larger based on the response factors for the continuing calibration verification sample. Perform a system blank analysis at the beginning of each analytical sequence to demonstrate that the secondary trap and TD/GC/MS analytical equipment are free of any significant interferents. Flag all sample data from analytical sequences that fail the system blank check and provide a narrative on how the failure affects the data use.

9.2 *Tube Conditioning.*

9.2.1 Conditioned tubes must be demonstrated to be free of contaminants and interference by running 10 percent of the blank tubes selected at random from each conditioned batch (see Section 8.1).

9.2.2 Confirm that artifacts and background contamination are ≤ 0.2 ppbv or less than three times the detection limit of the procedure or less than 10 percent of the target compound(s) mass that would be collected if airborne concentrations were at the regulated limit value, whichever is larger. Only tubes that meet these criteria can be used for field monitoring, field or laboratory blanks, or for system calibration.

9.2.3 If unacceptable levels of VOCs are observed in the tube blanks, then the processes of tube conditioning and checking the blanks must be repeated.

9.3 *Field and Laboratory Blanks.*

9.3.1 Field and laboratory blank tubes must be prepared from tubes that are identical to those used for field sampling—*i.e.,* they should be from the same batch, have a similar history, and be conditioned at the same time.

9.3.2 At least two laboratory blanks are required per monitoring episode. These laboratory blanks must be stored in the laboratory under clean controlled ambient temperature conditions throughout the monitoring period. Analyze one laboratory blank at the beginning and one at the end of the associated field sample runs.

9.3.3 Laboratory blank/artifact levels must meet the requirements of Section 9.2.2 (see also Table 17.1). Flag all data that do not meet this criterion with a note that associated results are estimated, and likely to be biased high due to laboratory blank background.

9.3.4 Field blanks must be shipped to the monitoring site with the sampling tubes and must be stored at the sampling location throughout the monitoring exercise (see Method 325B). The long-term storage caps must be in place and must be stored outside the shipping container at the sampling location (see Method 325B). The field blanks are then shipped back to the laboratory in the same container as the sampled tubes. One field blank tube is required for every 10 sampled tubes on a monitoring exercise and no less than two field blanks should be collected, regardless of the size of the monitoring study.

9.3.5 Field blanks must contain no greater than one-third of the measured target analyte or compliance limit for field samples (see Table 17.1). Flag all data that do not meet this criterion with a note that the associated results are estimated and likely to be biased high due to field blank background.

9.4 *Duplicate Samples.* Duplicate (collocated) samples collected must be analyzed and reported as part of method quality control. They are used to evaluate sampling and analysis precision. Relevant performance criteria are given in Section 9.9.

9.5 *Method Performance Criteria.* Unless otherwise noted, monitoring method performance specifications must be demonstrated for the target compounds using the procedures described in Addendum A to this method and the statistical approach presented in Method 301.

9.6 *Limit of Detection.* Determine the limit of detection under the analytical conditions selected (see Section 11.3) using the procedure in Section 15 of Method 301. The limit of detection is defined for each system by making seven replicate measurements of a concentration of the compound of interest within a factor of five of the detection limit. Compute the standard deviation for the seven replicate concentrations, and multiply this value by three. The results should demonstrate that the method is able to measure analytes such as benzene at concentrations as low as 10 ppt or 1/3rd (preferably 1/10th) of the lowest concentration of interest, whichever is larger.

Note: Determining the detection limit may be an iterative process as described in 40 CFR part 136, Appendix B.

9.7 *Analytical Bias.* Analytical bias must be demonstrated to be within ±30 percent using Equation 9.1. Analytical bias must be demonstrated during initial setup of this method and as part of the routine, single-level calibration verification carried out with every sequence of 10 samples or less (see Section 9.14). Calibration standard tubes (see Section 10.0) may be used for this purpose.

$$Analytical\ Bias = \frac{(Spiked\ Value - Measured\ Value)}{Spiked\ Value} \times 100 \qquad \text{Eq. 9.1}$$

Where:

Spiked Value = A known mass of VOCs added to the tube.

Measured Value = Mass determined from analysis of the tube.

9.8 *Analytical Precision.* Demonstrate an analytical precision within ±20 percent using Equation 9.2. Analytical precision must be demonstrated during initial setup of this method and at least once per year. Calibration standard tubes may be used (see Section 10.0) and data from daily single-level calibration verification checks may also be applied for this purpose.

$$Analytical\ Precision = \frac{(|A1 - A2|)}{\bar{A}} \times 100 \qquad \text{Eq. 9.2}$$

Where:

A1 = A measurement value taken from one spiked tube.

A2 = A measurement value taken from a second spiked tube.

$\bar{A}$ = The average of A1 and A2.

9.9 *Field Replicate Precision.* Use Equation 9.3 to determine and report replicate precision for duplicate field samples (see Section 9.4). The level of agreement between duplicate field samples is a measure of the precision achievable for the entire sampling and analysis procedure. Flag data sets for which the duplicate samples do not agree within 30 percent.

$$Field\ Precision = \frac{(|F1 - F2|)}{\bar{F}} \times 100 \qquad \text{Eq. 9.3}$$

Where:

F1 = A measurement value (mass) taken from one of the two field replicate tubes used in sampling.

F2 = A measurement value (mass) taken from the second of two field replicate tubes used in sampling.

$\bar{F}$ = The average of F1 and F2.

9.10 *Desorption Efficiency and Compound Recovery.* The efficiency of the thermal desorption method must be determined.

9.10.1 Quantitative (>95 percent) compound recovery must be demonstrated by repeat analyses on a same standard tube.

9.10.2 Compound recovery through the TD system can be demonstrated by comparing the calibration check sample response factor obtained from direct GC injection of liquid standards with that obtained from thermal desorption analysis response factor using the same column under identical conditions.

9.10.3 If the relative response factors obtained for one or more target compounds introduced to the column via thermal desorption fail to meet the criteria in Section 9.10.1, you must adjust the TD parameters to meet the criteria and repeat the experiment. Once the thermal desorption conditions have been optimized, you must repeat this test each time the analytical system is recalibrated to demonstrate continued method performance.

9.11 *Audit Samples.* Certified reference standard samples must be used to audit this procedure (if available). Accuracy within 30 percent must be demonstrated for relevant ambient air concentrations (0.5 to 25 ppb).

9.12 *Mass Spectrometer Tuning Criteria.* Tune the mass spectrometer (if used) according to manufacturer's specifications. Verify the instrument performance by analyzing a 50 ηg injection of bromofluorobenzene. Prior to the beginning of each analytical sequence or every 24 hours during continuous GC/MS operation for this method demonstrate that the bromofluorobenzene tuning performance criteria in Table 9.1 have been met.

TABLE 9.1—GC/MS TUNING CRITERIA [1]

Target mass	Rel. to mass	Lower limit %	Upper limit %
50	95	8	40
75	95	30	66
95	95	100	100
96	95	5	9
173	174	0	2
174	95	50	120
175	174	4	9
176	174	93	101
177	176	5	9

[1] All ion abundances must be normalized to m/z 95, the nominal base peak, even though the ion abundance of m/z 174 may be up to 120 percent that of m/z 95.

9.13 *Routine Calibrations Checks at the Start of a Sequence.* Run single-level calibration checks before each sequence of analyses and after every tenth sample to ensure that the previous multi-level calibration (see Section 10.6.3) is still valid.

9.13.1 The sample concentration used for the routine calibration check should be near the mid-point of the multi-level calibration range.

9.13.2 Quantitation software must be updated with response factors determined from the daily calibration standard. The percent deviation between the initial calibration and the daily calibration check for all compounds must be within 30 percent.

9.14 *Calibration Verification at the End of a Sequence.* Run another single level standard after running each sequence of samples. The initial calibration check for a subsequent set of samples may be used as the final calibration check for a previous analytical sequence, provided the same analytical method is used and the subsequent set of samples is analyzed immediately (within 4 hours) after the last calibration verification.

9.15 *Additional Verification.* Use a calibration check standard from a second, separate source to verify the original calibration at least once every three months.

9.16 *Integration Method.* Document the procedure used for integration of analytical data including field samples, calibration standards and blanks.

9.17 *QC Records.* Maintain all QC reports/records for each TD/GC/MS analytical system used for application of this method. Routine quality control requirements for this method are listed below and summarized in Table 17.1.

10.0 Calibration and Standardization

10.1 Calibrate the analytical system using standards covering the range of analyte masses expected from field samples.

10.2 Analytical results for field samples must fall within the calibrated range of the analytical system to be valid.

10.3 Calibration standard preparation must be fully traceable to primary standards of mass and/or volume, and/or be confirmed using an independent certified reference method.

10.3.1 Preparation of calibration standard tubes from standard atmospheres.

10.3.1.1 Subject to the requirements in Section 7.2.1, low-level standard atmospheres may be introduced to clean, conditioned sorbent tubes in order to produce calibration standards.

10.3.1.2 The standard atmosphere generator or system must be capable of producing sufficient flow at a constant rate to allow the required analyte mass to be introduced within a reasonable time frame and without affecting the concentration of the standard atmosphere itself.

10.3.1.3 The sampling manifold may be heated to minimize risk of condensation but the temperature of the gas delivered to the sorbent tubes may not exceed 100 °F.

10.3.1.4 The flow rates passed through the tube should be in the order of 50–100 ml/min and the volume of standard atmosphere sampled from the manifold or chamber must not exceed the breakthrough volume of the sorbent at the given temperature.

10.4 Preparation of calibration standard tubes from concentrated gas standards.

10.4.1 If a suitable concentrated gas standard (see Section 7.2.2) can be obtained, follow the manufacturer's recommendations relating to suitable storage conditions and product lifetime.

10.4.2 Introduce precise 0.5 to 5.0 ml aliquots of the standard to the sampling end of conditioned sorbent tubes in a 50–100 ml/min flow of pure carrier gas.

Note: This can be achieved by connecting the sampling end of the tube to an unheated GC injector (see Section 6.6) and introducing the aliquot of gas using a suitable gas syringe. Gas sample valves could alternatively be used to meter the standard gas volume.

10.4.3 Each sorbent tube should be left connected to the flow of gas for 2 minutes after standard introduction. As soon as each spiked tube is removed from the injection unit, seal it with long-term storage caps and place it in an appropriate tube storage/transportation container if it is not to be analyzed within 24 hours.

10.5 Preparation of calibration standard tubes from liquid standards.

10.5.1 Suitable standards are described in Section 7.3.

10.5.2 Introduce precise 0.5 to 2 µl aliquots of liquid standards to the sampling end of sorbent tubes in a flow of carrier gas using a precision syringe and an unheated injector (Section 6.6). The flow of gas should be sufficient to completely vaporize the liquid standard.

Note: If the analytes of interest are higher boiling than n-decane, reproducible analyte transfer to the sorbent bed is optimized by allowing the tip of the syringe to gently touch the sorbent retaining gauze at the sampling end of the tube.

10.5.3 Each sorbent tube is left connected to the flow of gas for 5 minutes after liquid standard introduction.

10.5.3.1 As soon as each spiked tube is removed from the injection unit, seal it with long-term storage caps and place it in an appropriate tube storage container if it is not to be analyzed within 24 hours.

Note: In cases where it is possible to selectively purge the solvent from the tube while all target analytes are quantitatively retained, a larger 2 µL injection may be made for optimum accuracy. However, if the solvent cannot be selectively purged and will be present during analysis, the injection volume should be as small as possible (*e.g.,* 0.5 µL) to minimize solvent interference.

Note: This standard preparation technique requires the entire liquid plug including the tip volume be brought into the syringe barrel. The volume in the barrel is recorded, the syringe is inserted into the septum of the spiking apparatus and allowed to warm to the temperature of the injection body. The liquid is then quickly injected. The result is the cool liquid contacts the hot syringe tip and the sample is completely forced into the injector and onto the sorbent cartridge. A bias occurs with this method when sample is drawn continuously up into the syringe to the specified volume and the calibration solution in the syringe tip is ignored.

10.6 Preparation of calibration standard tubes from multiple standards.

10.6.1 If it is not possible to prepare one standard containing all the compounds of interest (*e.g.,* because of chemical reactivity or the breadth of the volatility range), standard tubes can be prepared from multiple gas or liquid standards.

10.6.2 Follow the procedures described in Sections 10.4 and 10.5, respectively, for introducing each gas and/or liquid standard to the tube and load those containing the highest boiling compounds of interest first and the lightest species last.

10.7 Additional requirements for preparation of calibration tubes.

10.7.1 Storage of Calibration Standard Tubes.

10.7.1.1 Seal tubes with long-term storage caps immediately after they have been disconnected from the standard loading manifold or injection apparatus.

10.7.1.2 Calibration standard tubes may be stored for no longer than 30 days and

should be refrigerated if there is any risk of chemical interaction or degradation.

10.8 Keep records for calibration standard tubes to include the following:

10.8.1 The stock number of any commercial liquid or gas standards used.

10.8.2 A chromatogram of the most recent blank for each tube used as a calibration standard together with the associated analytical conditions and date of cleaning.

10.8.3 Date of standard loading.

10.8.4 List of standard components, approximate masses and associated confidence levels.

10.8.5 Example analysis of an identical standard with associated analytical conditions.

10.8.6 A brief description of the method used for standard preparation.

10.8.7 The standard's expiration date.

10.9 TD/GC/MS using standard tubes to calibrate system response.

10.9.1 Verify that the TD/GC/MS analytical system meets the instrument performance criteria given in Section 9.1 and relevant parts of Section 9.5.

10.9.2 The prepared calibration standard tubes must be analyzed using the analytical conditions applied to field samples (see Section 11.0) and must be selected to ensure quantitative transfer and adequate chromatographic resolution of target compounds, surrogates, and internal standards in order to enable reliable identification and quantitation of compounds of interest. The analytical conditions should also be sufficiently stringent to prevent buildup of higher boiling, non-target contaminants that may be collected on the tubes during field monitoring.

10.9.3 Calibration range. Each TD/GC/MS system must be calibrated at five concentrations that span the monitoring range of interest before being used for sample analysis. This initial multi-level calibration determines instrument sensitivity under the analytical conditions selected and the linearity of GC/MS response for the target compounds. One of the calibration points must be within a factor of five of the detection limit for the compounds of interest.

10.9.4 One of the calibration points from the initial calibration curve must be at the same concentration as the daily single-level calibration verification standard (*e.g.,* the mass collected when sampling air at typical concentrations).

10.9.5 Calibration frequency. Each GC/MS system must be recalibrated with a full 5-point calibration curve following corrective action (*e.g.,* ion source cleaning or repair, column replacement) or if the instrument fails the daily calibration acceptance criteria.

10.9.5.1 Single-level calibrations checks must be carried out on a regular routine basis as described in Section 9.6.

10.9.5.2 Quantitation ions for the target compounds are shown in Table 10.1. Use the primary ion unless interferences are present, in which case you should use a secondary ion.

TABLE 10.1—CLEAN AIR ACT VOLATILE ORGANIC COMPOUNDS FOR PASSIVE SORBENT SAMPLING

Compound	CAS No.	BP (°C)	Vapor pressure (mmHg)[a]	MW[b]	Characteristic ion(s)	
					Primary	Secondary
1,1-Dichloroethene	75–35–4	32	500	96.9	61	96
3-Chloropropene	107–05–1	44.5	340	76.5	76	41, 39, 78
1,1,2-Trichloro-1,2,2-trifluoroethane						
1,1-Dichloroethane	75–34–3	57.0	230	99	63	65, 83, 85, 98, 100.
1,2-Dichloroethane	107–06–2	83.5	61.5	99	62	98
1,1,1-Trichloroethane	71–55–6	74.1	100	133.4	97	99, 61
Benzene	71–43–2	80.1	76.0	78	78	
Carbon tetrachloride	56–23–5	76.7	90.0	153.8	117	119
1,2-Dichloropropane	78–87–5	97.0	42.0	113	63	112
Trichloroethene	79–01–6	87.0	20.0	131.4	95	97, 130, 132
1,1,2-Trichloroethane	79–00–5	114	19.0	133.4	83	97, 85
Toluene	108–88–3	111	22.0	92	92	91
Tetrachloroethene	127–18–4	121	14.0	165.8	164	129, 131, 166
Chlorobenzene	108–90–7	132	8.8	112.6	112	77, 114
Ethylbenzene	100–41–4	136	7.0	106	91	106
m,p-Xylene	108–38–3, 106–42–3	138	6.5	106.2	106	91
Styrene	100–42–5	145	6.6	104	104	78
o-Xylene	95–47–6	144	5.0	106.2	106	91
p-Dichlorobenzene	106–46–7	173	0.60	147	146	111, 148

[a] Pressure in millimeters of mercury.
[b] Molecular weight.

11.0 Analytical Procedure

11.1 *Preparation for Sample Analysis.*

11.1.1 Each sequence of analyses must be ordered as follows:

11.1.1.1 A calibration verification.

11.1.1.2 A laboratory blank.

11.1.1.3 Field blank.

11.1.1.4 Sample(s).

11.1.1.5 Field blank.

11.1.1.6 A single-level calibration verification standard tube after 10 field samples.

11.1.1.7 A single-level calibration verification standard tube at the end of the sample batch.

11.2 *Pre-desorption System Checks and Procedures.*

11.2.1 Ensure all sample tubes and field blanks are at ambient temperature before removing them from the storage container.

11.2.2 If using an automated TD/GC/MS analyzer, remove the long-term storage caps from the tubes, replace them with appropriate analytical caps, and load them into the system in the sequence described in Section 11.1. Alternatively, if using a manual system, uncap and analyze each tube, one at a time, in the sequence described in Section 11.1.

11.2.3 The following thermal desorption system integrity checks and procedures are required before each tube is analyzed.

Note: Commercial thermal desorbers should implement these steps automatically.

11.2.3.1 Tube leak test: Each tube must be leak tested as soon as it is loaded into the carrier gas flow path before analysis to ensure data integrity.

11.2.3.2 Conduct the leak test at the GC carrier gas pressure, without heat or gas flow applied. Tubes that fail the leak test should not be analyzed, but should be resealed and stored intact. On automated systems, the instrument should continue to leak test and analyze subsequent tubes after a given tube has failed. Automated systems must also store and record which tubes in a sequence have failed the leak test. Information on failed tubes should be downloaded with the batch of sequence information from the analytical system.

11.2.3.3 Leak test the sample flow path. Leak check the sample flow path of the thermal desorber before each analysis without heat or gas flow applied to the

sample tube. Stop the automatic sequence of tube desorption and GC analysis if any leak is detected in the main sample flow path. This process may be carried out as a separate step or as part of Section 11.2.3.2.

11.2.4 Optional dry purge.

11.2.4.1 Tubes may be dry purged with a flow of pure dry gas passing into the tube from the sampling end, to remove water vapor and other very volatile interferents if required.

11.2.5 Internal standard (IS) addition.

11.2.5.1 Use the internal standard addition function of the automated thermal desorber (if available) to introduce a precise aliquot of the internal standard to the sampling end of each tube after the leak test and shortly before primary (tube) desorption).

Note: This step can be combined with dry purging the tube (Section 11.2.4) if required.

11.2.5.2 If the analyzer does not have a facility for automatic IS addition, gas or liquid internal standard can be manually introduced to the sampling end of tubes in a flow of carrier gas using the types of procedure described in Sections 10.3 and 10.4, respectively.

11.2.6 Pre-purge. Each tube should be purged to vent with carrier gas flowing in the desorption direction (*i.e.,* flowing into the tube from the non-sampling end) to remove oxygen before heat is applied. This is to prevent analyte and sorbent oxidation and to prevent deterioration of key analyzer components such as the GC column and mass spectrometer (if applicable). A series of schematics illustrating these steps is presented in Figures 17.2 and 17.3.

11.3 *Analytical Procedure.*

11.3.1 *Steps Required for Thermal Desorption.*

11.3.1.1 Ensure that the pressure and purity of purge and carrier gases supplying the TD/GC/MS system, meet manufacturer specifications and the requirements of this method.

11.3.1.2 Ensure also that the analytical method selected meets the QC requirements of this method (Section 9) and that all the analytical parameters are at set point.

11.3.1.3 Conduct predesorption system checks (see Section 11.2).

11.3.1.4 Desorb the sorbent tube under conditions demonstrated to achieve >95 percent recovery of target compounds (see Section 9.5.2).

Note: Typical tube desorption conditions range from 280–350 °C for 5–15 minutes with a carrier gas flow of 30–100 mL/min passing through the tube from the non-sampling end such that analytes are flushed out of the tube from the sampling end. Desorbed VOCs are concentrated (refocused) on a secondary, cooled sorbent trap integrated into the analytical equipment (see Figure 17.4). The focusing trap is typically maintained at a temperature between −30 and +30 °C during focusing. Selection of hydrophobic sorbents for focusing and setting a trapping temperature of +25 to 27 °C aid analysis of humid samples because these settings allow selective elimination of any residual water from the system, prior to GC/MS analysis.

Note: The transfer of analytes from the tube to the focusing trap during primary (tube) desorption can be carried out splitless or under controlled split conditions (see Figure 17.4) depending on the masses of target compounds sampled and the requirements of the system—sensitivity, required calibration range, column overload limitations, etc. Instrument controlled sample splits must be demonstrated by showing the reproducibility using calibration standards. Field and laboratory blank samples must be analyzed at the same split as the lowest calibration standard. During secondary (trap) desorption the focusing trap is heated rapidly (typically at rates > 40 °C/s) with inert (carrier) gas flowing through the trap (3–100 mL/min) in the reverse direction to that used during focusing.

11.3.1.5 The split conditions selected for optimum field sample analysis must also be demonstrated on representative standards.

Note: Typical trap desorption temperatures are in the range 250–360 °C, with a ''hold'' time of 1–3 minutes at the highest temperature. Trap desorption automatically triggers the start of GC analysis. The trap desorption can also be carried out under splitless conditions (*i.e.,* with everything desorbed from the trap being transferred to the analytical column and GC detector) or, more commonly, under controlled split conditions (see Figure 17.4). The selected split ratio depends on the masses of target compounds sampled and the requirements of the system—sensitivity, required calibration range, column overload limitations, etc. If a split is selected during both primary (trap) desorption and secondary (trap) desorption, the overall split ratio is the product of the two. Such 'double' split capability gives optimum flexibility for accommodating concentrated samples as well as trace-level samples on the TD/GC/MS analytical system. High resolution capillary columns and most GC/MS detectors tend to work best with approximately 20–200 ng per compound per tube to avoid saturation. The overall split ratio must be adjusted such that, when it is applied to the sample mass that is expected to be collected during field monitoring, the amount reaching the column will be attenuated to fall within this range. As a rule of thumb this means that ~20 ng samples will require splitless or very low split analysis, ~2 µg samples will require a split ratio in the order of ~50:1 and 200 µg samples will require a double split method with an overall split ratio in the order of 2,000:1.

11.3.1.6 Analyzed tubes must be resealed with long-term storage caps immediately after analysis (manual systems) or after completion of a sequence (automated systems). This prevents contamination, minimizing the extent of tube reconditioning required before subsequent reuse.

11.3.2 *GC/MS Analytical Procedure.*

11.3.2.1 Heat/cool the GC oven to its starting set point.

11.3.2.2 If using a GC/MS system, it can be operated in either MS-Scan or MS–SIM mode (depending on required sensitivity levels and the type of mass spectrometer selected). As soon as trap desorption and transfer of analytes into the GC column triggers the start of the GC/MS analysis, collect mass spectral data over a range of masses from 35 to 300 amu. Collect at least 10 data points per eluting chromatographic peak in order to adequately integrate and quantify target compounds.

11.3.2.3 Use secondary ion quantitation only when there are sample matrix interferences with the primary ion. If secondary ion quantitation is performed, flag the data and document the reasons for the alternative quantitation procedure.

11.3.2.4 Whenever the thermal desorption—GC/MS analytical method is changed or major equipment maintenance is performed, you must conduct a new five-level calibration (see Section 10.6.3). System calibration remains valid as long as results from subsequent routine, single-level calibration verification standards are within 30 percent of the most recent 5-point calibration (see Section 10.9.5). Include relevant routine, single-level calibration data in the supporting information in the data report for each set of samples.

11.3.2.5 Document, flag and explain all sample results that exceed the calibration range. Report flags and provide documentation in the analytical results for the affected sample(s).

12.0 Data Analysis, Calculations, and Reporting

12.1 *Recordkeeping Procedures for Sorbent Tubes.*

12.1.1 Label sample tubes with a unique identification number as described in Section 6.3.

12.1.2 Keep records of the tube numbers and sorbent lots used for each sampling episode.

12.1.3 Keep records of sorbent tube packing if tubes are manually prepared in the laboratory and not supplied commercially. These records must include the masses and/or bed lengths of sorbent(s) contained in each tube, the maximum allowable temperature for that tube and the date each tube was packed. If a tube is repacked at any stage, record the date of tube repacking and any other relevant information required in Section 12.1.

12.1.4 Keep records of the conditioning and blanking of tubes. These records must include, but are not limited to, the unique identification number and measured background resulting from the tube conditioning.

12.1.5 Record the location, dates, tube identification and times associated with each sample collection. Record this information on a Chain of Custody form that is sent to the analytical laboratory.

12.1.6 Field sampling personnel must complete and send a Chain of Custody to the analysis laboratory (see Section 8.6.4 of Method 325A for what information to include and Section 17.0 of this method for an example form). Duplicate copies of the Chain of Custody must be included with the sample report and stored with the field test data archive.

12.1.7 Field sampling personnel must also keep records of the daily unit vector wind direction, daily average temperature, and daily average barometric pressure for the sample collection period. See Section 8.6.5 of Method 325A.

12.1.8 Laboratory personnel must record the sample receipt date, and analysis date.

12.1.9 Laboratory personnel must maintain records of the analytical method and sample results in electronic or hardcopy in sufficient detail to reconstruct the calibration, sample, and quality control results from each sampling episode.

12.2 *Calculations.*

12.2.1 Complete the calculations in this section to determine compliance with calibration quality control criteria (see also Table 17.1).

12.2.1.1 Response factor (RF). Calculate the RF using Equation 12.1:

$$RF = \frac{[A_s \times M_{is}]}{[A_{is} \times M_s]} \qquad \text{Eq. 12.1}$$

Where:

A_s = Peak area for the characteristic ion of the analyte.

A_{is} = Peak area for the characteristic ion of the internal standard.

M_s = Mass of the analyte.

M_{is} = Mass of the internal standard.

12.2.1.2 Standard deviation of the response factors (SD_{RF}). Calculate the SD_{RF} using Equation 12.2:

$$SD_{RF} = \sqrt{\frac{\sum_{i=1}^{n}\left(RF_i - \overline{RF}\right)^2}{(n-1)}} \qquad \text{Eq. 12.2}$$

Where:

RF_i = RF for each of the calibration compounds.

RF = Mean RF for each compound from the initial calibration.

n = Number of calibration standards.

12.2.1.3 Percent deviation (%DEV). Calculate the %DEV using Equation 12.3:

$$\%DEV = SD_{RF} \div \overline{RF} \times 100 \qquad \text{Eq. 12.3}$$

Where:

SD_{RF} = Standard deviation.

RF = Mean RF for each compound from the initial calibration.

12.2.1.4 Relative percent difference (RPD). Calculate the RPD using Equation 12.4:

$$RPD = \frac{R1 - R2}{[(R1 + R2)/2]} \times 100 \qquad \text{Eq. 12.4}$$

Where:

R1, R2 = Values that are being compared (*i.e.,* response factors in calibration verification).

12.2.2 Determine the equivalent concentration of compounds in atmospheres as follows.

12.2.3 For passive sorbent tube samples, calculate the concentration of the target compound(s) in the sampled air, in μg/m³ by using Equation 12.5 (Reference 21).

$$C_m = \frac{m_{meas}}{U \times t} \times 10^6 \qquad \text{Eq. 12.5}$$

Where:

C_m = The concentration of target compound in the air sampled (μg/m³).

m_{meas} = The mass of the compound as measured in the sorbent tube (μg).

U = The diffusive uptake rate (sampling rate) (mL/min).

t = The exposure time (minutes).

Note: Diffusive uptake rates for common VOCs, using carbon sorbents packed into sorbent tubes of the dimensions specified in Section 6.1, are listed in Table 12.1. Adjust analytical conditions to keep expected sampled masses within range (see Sections 11.3.1.3 to 11.3.1.5). Best possible limits of detection are typically in the order of 0.1 ppb for 1,3-butadiene and 0.05 ppb for volatile aromatics such as benzene for 14-day monitoring. However, actual detection limits will depend upon the analytical conditions selected.

TABLE 12.1—VALIDATED SORBENTS AND UPTAKE RATES FOR SELECTED CLEAN AIR ACT COMPOUNDS

Compound	Carbopack X uptake rate (ml/min) [a]
1,1-Dichloroethene	0.57±0.14
3-Chloropropene	0.51±0.3
1,1-Dichloroethane	0.57±0.1
1,2-Dichloroethane	0.57±0.08
1,1,1-Trichloroethane	0.51±0.1
Benzene	0.66±0.06
Carbon tetrachloride	0.51±0.06
1,2-Dichloropropane	0.52±0.1

TABLE 12.1—VALIDATED SORBENTS AND UPTAKE RATES FOR SELECTED CLEAN AIR ACT COMPOUNDS—Continued

Compound	Carbopack X uptake rate (ml/min) [a]
Trichloroethene	0.5±0.05
1,1,2-Trichloroethane	0.49±0.13
Toluene	0.52±0.14
Tetrachloroethene	0.48±0.05
Chlorobenzene	0.51±0.06
Ethylbenzene	0.46±0.07
m,p-Xylene	0.46±0.09
Styrene	0.5±0.14
o-Xylene	0.46±0.12

TABLE 12.1—VALIDATED SORBENTS AND UPTAKE RATES FOR SELECTED CLEAN AIR ACT COMPOUNDS—Continued

Compound	Carbopack X uptake rate (ml/min) [a]
p-Dichlorobenzene	0.45±0.05

[a] Reference 3, McClenny, J. Environ. Monit. 7:248–256.

12.2.4 Correct target concentrations determined at the sampling site temperature and atmospheric pressure to standard conditions (25 °C and 760 mm mercury) using Equation 12.6 (Reference 22).

$$U_{NTP} = U \times \left(\frac{298.2}{t_{ss}}\right)^{\frac{3}{2}} \times \left(\frac{P_{ss}}{760}\right) \qquad \text{Eq. 12.6}$$

Where:

t_{ss} = The temperature at the sampling site (K).

P_{ss} = The pressure at the sampling site (mm Hg).

13.0 Method Performance

The performance of this procedure for VOC not listed in Table 12.1 is determined using the procedure in Addendum A of this Method.

13.1 The valid range for measurement of VOC is approximately 0.5 µg/m³ to 5 mg/m³ in air, collected over a 14-day sampling period. The upper limit of the useful range depends on the split ratio selected (Section 11.3.1) and the dynamic range of the analytical system. The lower limit of the useful range depends on the noise from the analytical instrument detector and on the blank level of target compounds or interfering compounds on the sorbent tube (see Section 13.3).

13.2 Diffusive sorbent tubes compatible with passive sampling and thermal desorption methods have been evaluated at relatively high atmospheric concentrations (*i.e.,* mid-ppb to ppm) and published for use in workplace air and industrial/mobile source emissions (References 15–16, 21–22).

13.3 Best possible detection limits and maximum quantifiable concentrations of air pollutants range from sub-part-per-trillion (sub-ppt) for halogenated species such as CCl_4 and the freons using an electron capture detector (ECD), SIM Mode GC/MS, triple quad MS or GC/TOF MS to sub-ppb for volatile hydrocarbons collected over 72 hours followed by analysis using GC with quadrupole MS operated in the full SCAN mode.

13.3.1 Actual detection limits for atmospheric monitoring vary depending on several key factors. These factors are:

- Minimum artifact levels.
- GC detector selection.
- Time of exposure for passive sorbent tubes.
- Selected analytical conditions, particularly column resolution and split ratio.

14.0 Pollution Prevention

This method involves the use of ambient concentrations of gaseous compounds that post little or no danger of pollution to the environment.

15.0 Waste Management

Dispose of expired calibration solutions as hazardous materials. Exercise standard laboratory environmental practices to minimize the use and disposal of laboratory solvents.

16.0 References

1. Winberry, W.T. Jr., et al., Determination of Volatile Organic Compounds in Ambient Air Using Active Sampling onto Sorbent Tubes: Method TO–17r, Second Edition, U.S. Environmental Protection Agency, Research Triangle Park, NC 27711, January 1999. *http://www.epa.gov/ttnamti1/airtox.html#compendium.*
2. Ciccioli, P., Brancaleoni, E., Cecinato, A., Sparapini, R., and Frattoni, M., ''Identification and Determination of Biogenic and Anthropogenic VOCs in Forest Areas of Northern and Southern Europe and a Remote Site of the Himalaya Region by High-resolution GC–MS,'' J. of Chrom., 643, pp 55–69, 1993.
3. McClenny, W.A., K.D. Oliver, H.H. Jacumin, Jr., E.H. Daughtrey, Jr., D.A. Whitaker. 2005. 24 h diffusive sampling of toxic VOCs in air onto Carbopack X solid adsorbent followed by thermal desorption/GC/MS analysis— laboratory studies. J. Environ. Monit. 7:248–256.
4. Markes International (*www.markes.com/publications*): Thermal desorption Technical Support Note 2: Prediction of uptake rates for diffusive tubes.
5. Ciccioli, P., Brancaleoni, E., Cecinato, A., DiPalo, C., Brachetti, A., and Liberti, A., ''GC Evaluation of the Organic Components Present in the Atmosphere at Trace Levels with the Aid of Carbopack™ B for Preconcentration of the Sample,'' J. of Chrom., 351, pp 433–449, 1986.
6. Broadway, G.M., and Trewern, T., ''Design Considerations for the Optimization of a Packed Thermal Desorption Cold Trap for Capillary Gas Chromatography,'' Proc. 13th Int'l Symposium on Capil. Chrom., Baltimore, MD, pp 310–320, 1991.
7. Broadway, G.M., ''An Automated System for use Without Liquid Cryogen for the Determination of VOC's in Ambient Air,'' Proc. 14th Int'l. Symposium on Capil. Chrom., Baltimore, MD, 1992.
8. Gibitch, J., Ogle, L., and Radenheimer, P., ''Analysis of Ozone Precursor Compounds in Houston, Texas Using Automated Continuous GCs,'' in Proceedings of the Air and Waste Management Association Conference: Measurement of Toxic and Related Air Pollutants, Air and Waste Management Association, Pittsburgh, PA, May 1995.
9. Vandendriessche, S., and Griepink, B., ''The Certification of Benzene, Toluene and m-Xylene Sorbed on Tenax TA in Tubes,'' CRM–112 CEC, BCR, EUR12308 EN, 1989.
10. MDHS 2 (Acrylonitrile in Air), ''Laboratory Method Using Porous Polymer Adsorption Tubes, and Thermal Desorption with Gas Chromatographic Analysis,'' Methods for the Determination of Hazardous Substances (MDHS), UK Health and Safety Executive, Sheffield, UK.
11. MDHS 22 (Benzene in Air), ''Laboratory Method Using Porous Polymer Adsorbent Tubes, Thermal Desorption and Gas Chromatography,'' Method for the Determination of Hazardous Substances (MDHS), UK Health and Safety Executive, Sheffield, UK.
12. MDHS 23 (Glycol Ether and Glycol Acetate Vapors in Air), ''Laboratory Method Using Tenax Sorbent Tubes, Thermal Desorption and Gas Chromatography,'' Method for the Determination of Hazardous Substances (MDHS), UK Health and Safety Executive, Sheffield, UK.
13. MDHS 40 (Toluene in air), ''Laboratory Method Using Pumped Porous Polymer Adsorbent Tubes, Thermal Desorption and Gas Chromatography,'' Method for the Determination of Hazardous Substances (MDHS), UK Health and Safety Executive, Sheffield, UK.
14. MDHS 60 (Mixed Hydrocarbons (C to C) in Air), ''Laboratory Method Using Pumped Porous Polymer 3 10 and Carbon Sorbent Tubes, Thermal Desorption and Gas Chromatography,'' Method for the Determination of Hazardous Substances (MDHS), UK

Health and Safety Executive, Sheffield, UK.
15. Price, J. A., and Saunders, K. J., ''Determination of Airborne Methyl tert-Butyl Ether in Gasoline Atmospheres,'' Analyst, Vol. 109, pp. 829–834, July 1984.
16. Coker, D. T., van den Hoed, N., Saunders, K. J., and Tindle, P. E., ''A Monitoring Method for Gasoline Vapour Giving Detailed Composition,'' Ann. Occup, Hyg., Vol 33, No. 11, pp. 15–26, 1989.
17. DFG, ''Analytische Methoden zur prufing gesundheitsschadlicher Arbeistsstoffe,'' Deutsche Forschungsgemeinschaft, Verlag Chemie, Weinheim FRG, 1985.
18. NNI, ''Methods in NVN Series (Luchtkwaliteit; Werkplekatmasfeer),'' Nederlands Normailsatie—Institut, Delft, The Netherlands, 1986–88.
19. ''Sampling by Solid Adsorption Techniques,'' Standards Association of Australia Organic Vapours, Australian Standard 2976, 1987.
20. Woolfenden, E. A., ''Monitoring VOCs in Air Using Pumped Sampling onto Sorbent Tubes Followed by Thermal Desorption-capillary GC Analysis: Summary of Reported Data and Practical Guidelines for Successful Application,'' J. Air & Waste Manage. Assoc., Vol. 47, 1997, pp. 20–36.
21. ASTM D4597–10, Standard Practice for Sampling Workplace Atmospheres to collect Gases or Vapors with Solid Sorbent Diffusive Samplers.
22. Validation Guidelines for Air Sampling Methods Utilizing Chromatographic Analysis, OSHA T–005, Version 3.0, May 2010, *http://www.osha.gov/dts/sltc/methods/chromguide/chromguide.pdf.*
23. Martin, *http://www.hsl.gov.uk/media/1619/issue14.pdf.*
24. BS EN 14662–4:2005, Ambient air quality—Standard method for the measurement of benzene concentrations—Part 4: Diffusive sampling followed by thermal desorption and gas chromatography.
25. ISO 16017–2:2003: Indoor, ambient and workplace air—Sampling and analysis of volatile organic compounds by sorbent tube/thermal desorption/capillary gas chromatography—Part 2: Diffusive sampling.

17.0 Tables, Diagrams, Flowcharts and Validation Data

TABLE 17.1—SUMMARY OF GC/MS ANALYSIS QUALITY CONTROL PROCEDURES

Parameter	Frequency	Acceptance criteria	Corrective action
Bromofluorobenzene Instrument Tune Performance Check.	Daily [a] prior to sample analysis	Evaluation criteria presented in Section 9.5 and Table 9.2.	1) Retune and or 2) Perform Maintenance.
Five point calibration bracketing the expected sample concentration.	Following any major change, repair or maintenance or if daily CCV does not meet method requirements. Recalibration not to exceed three months.	1) Percent Deviation (%DEV) of response factors ±30%.	1) Repeat calibration sample analysis.
		2) Relative Retention Times (RRTs) for target peaks ±0.06 units from mean RRT.	2) Repeat linearity check
			3) Prepare new calibration standards as necessary and repeat analysis.
Calibration Verification (CCV Second source calibration verification check).	Following the calibration curve	The response factor ±30% DEV from calibration curve average response factor.	1) Repeat calibration check
			2) Repeat calibration curve.
System Blank Analysis	Daily [a] following bromofluorobenzene and calibration check; prior to sample analysis.	1) ≤0.2 ppbv per analyte or ≤3 times the LOD, whichever is greater.	1) Repeat analysis with new blank tube.
		2) Internal Standard (IS) area response ±40% and IS Retention Time (RT) ±0.33 min. of most recent calibration check.	2) Check system for leaks, contamination.
			3) Analyze additional blank.
Blank Sorbent Tube Certification	One tube analyzed for each batch of tubes cleaned or 10 percent of tubes whichever is greater.	<0.2 ppbv per VOC targeted compound or 3 times the LOD, whichever is greater.	Reclean all tubes in batch and reanalyze.
Samples—Internal Standards	All samples	IS area response ±40% and IS RT ±0.33 min. of most recent calibration validation.	Flag Data for possible invalidation.

[a] Every 24 hours.

Method 325 A/B

EXAMPLE FIELD TEST DATA SHEET (FTDS)
AND
CHAIN OF CUSTODY

I. GENERAL INFORMATION

SITE NAME:

_____

SITE LOCATION ADDRESS:

_____

CITY: _____ STATE: _____ ZIP: _____

II. SAMPLING DATA

Sample ID (Tube) #	Sorbent	Sample or blank	Start Date	Start Time	Stop Date	Stop Time	Location (gps)	Ambient Temp. (°F)	Barometric Pressure (in. Hg)

III. CUSTODY INFORMATION

COLLECTED BY: _____
Relinquished to Shipper -
Name: _____ Date: _____ Time _____
Received by Laboratory -
Name _____ Date: _____ Time _____
Sample condition upon receipt:

_____

Analysis Required:

_____

_____

Comments:

_____

_____

_____

Figure 17.1. Example Field Data From and Chain of Custody

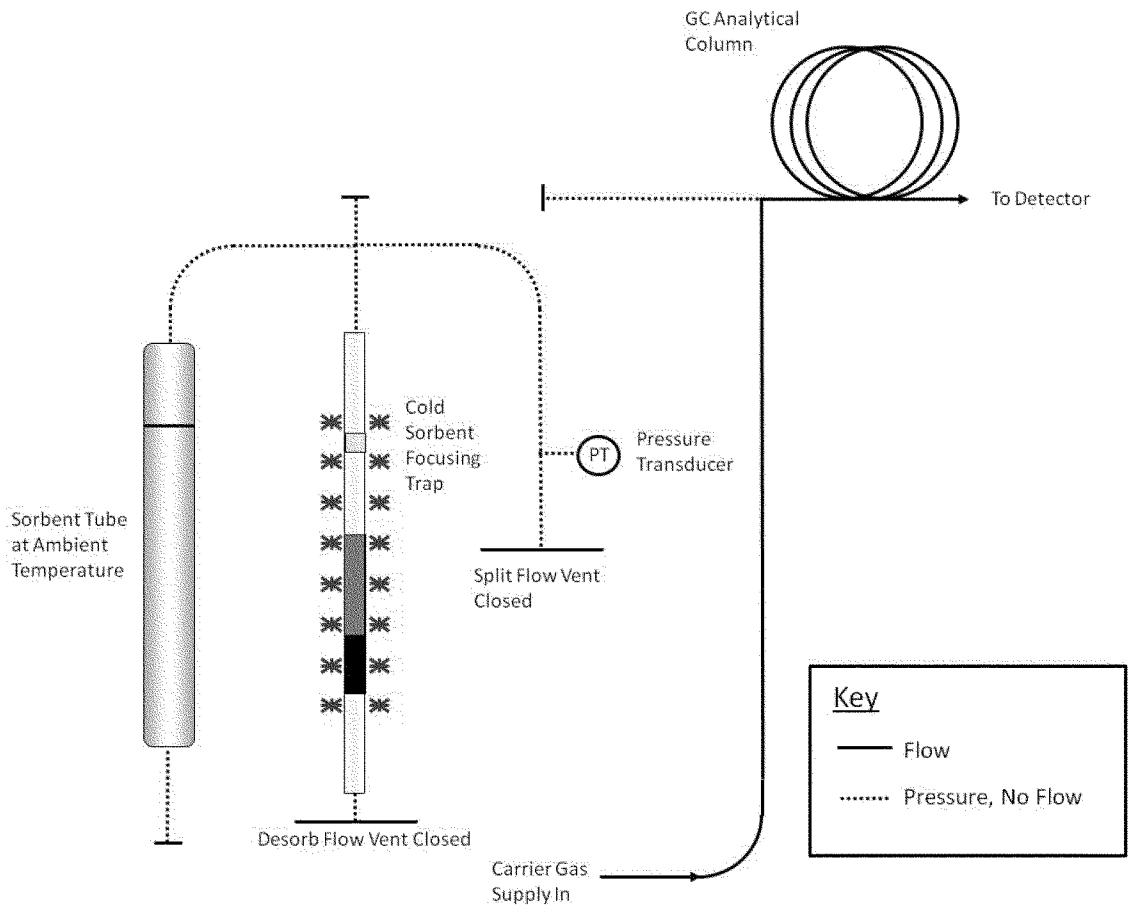

Figure 17.2. Schematic of Thermal Desorption Flow Path During Leak Testing

BILLING CODE 6560–50–P

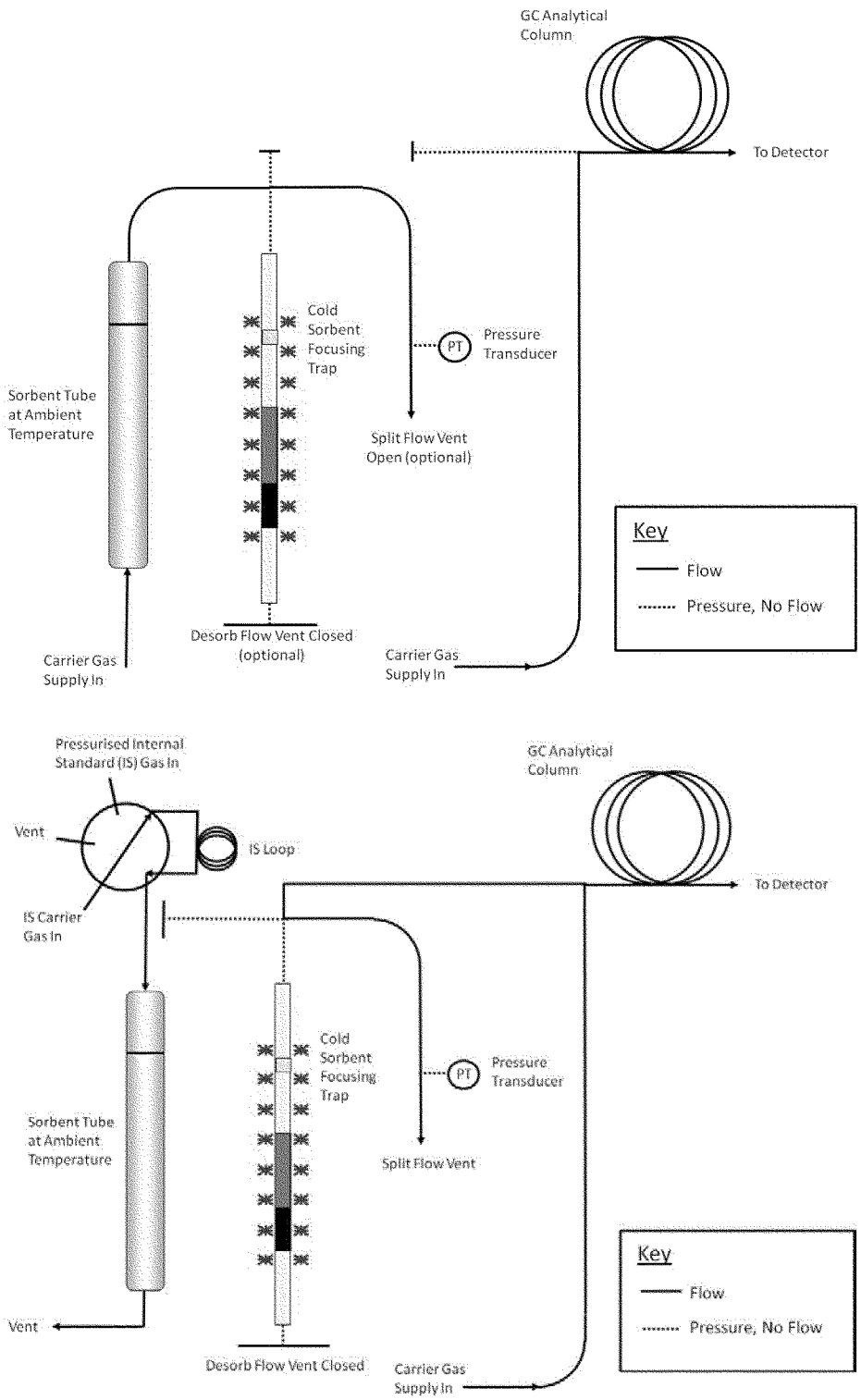

Figure 17.3. Schematic of Thermal Desorption Flow During Purge of Air (Top) and Addition of IS Gas to the Sorbent Tube (Bottom)

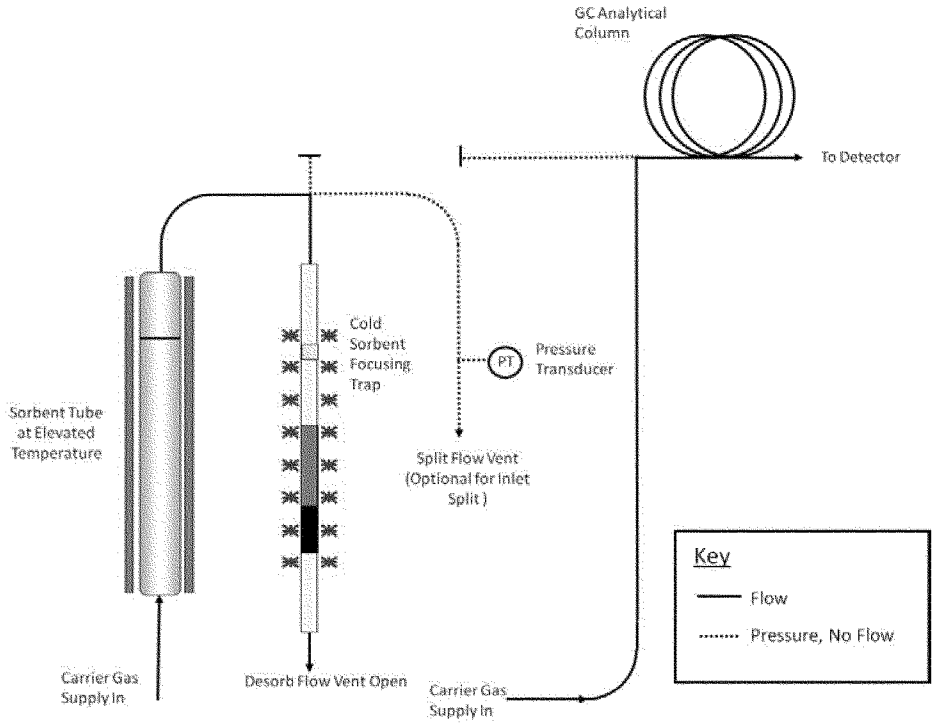

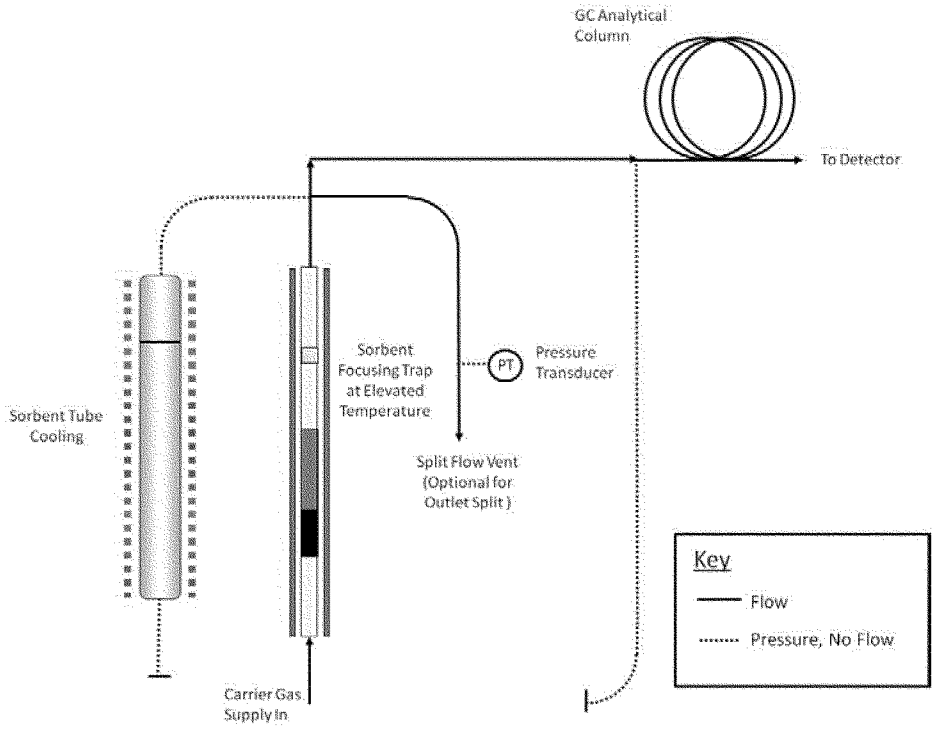

Figure 17.4. Schematic of Thermal Desorption Flow Path During Primary (Tube) Desorption (Top) and Secondary (Trap) Desorption and Transfer to the GC (Bottom)

BILLING CODE 6560–50–C

Addendum A to Method 325B—Method 325 Performance Evaluation

A.1 Scope and Application

A.1.1 To be measured by Methods 325A and 325B, each new target volatile organic compound (VOC) or sorbent that is not listed in Table 12.1 must be evaluated by exposing the selected sorbent tube to a known concentration of the target compound(s) in an exposure chamber following the procedure in this Addendum, unless the compound or

sorbent has already been validated and reported in one of the following national/international standard methods: ISO 16017–2:2003 (incorporated by reference—see § 63.14), ASTM D6196–03(2009) (incorporated by reference—see § 63.14), or BS EN 14662–4:2005 (incorporated by reference—see § 63.14), or in peer-reviewed open literature.

A.1.2 You must determine the uptake rate and the relative standard deviation compared to the theoretical concentration of volatile material in the exposure chamber for each of the tests required in this method. If data that meet the requirement of this Addendum are available in the peer reviewed open literature for VOCs of interest collected on your passive sorbent tube configuration, then such data may be submitted in lieu of the testing required in this Addendum.

A.1.3 You must expose sorbent tubes in a test chamber to parts per trillion by volume (pptv) and low parts per billion by volume (ppbv) concentrations of VOCs in humid atmospheres to determine the sorbent tube uptake rate and to confirm compound capture and recovery.

A.2 Summary of Method

A.2.1 Known concentrations of VOC are metered into an exposure chamber containing sorbent tubes filled with media selected to capture the volatile organic compounds of interest (see Figure A.1 for an example exposure chamber). VOC are diluted with humid air and the chamber is allowed to equilibrate for 6 hours. Clean passive sampling devices are placed into the chamber and exposed for a measured period of time. The passive uptake rate of the passive sampling devices is determined using the standard and dilution gas flow rates. Chamber concentrations are confirmed with active SUMMA canister sampling.

A.2.2 An exposure chamber and known gas concentrations must be used to challenge and evaluate the collection and recovery of target compounds from the sorbent and tube selected to perform passive measurements of VOC in atmospheres.

A.3 Definitions

A.3.1 *cc* is cubic centimeter.

A.3.2 *ECD* is electron capture detector.

A.3.3 *FID* is flame ionization detector.

A.3.4 *LED* is light-emitting diode.

A.3.5 *MFC* is mass flow controller.

A.3.6 *MFM* is mass flow meter.

A.3.7 *min* is minute.

A.3.8 *ppbv* is parts per billion by volume.

A.3.9 *ppmv* is parts per million by volume.

A.3.10 *PSD* is passive sampling device.

A.3.11 *psig* is pounds per square inch gauge.

A.3.12 *RH* is relative humidity.

A.3.13 *VOC* is volatile organic compound.

A.4 Interferences

A.4.1 VOC contaminants in water can contribute interference or bias results high. Use only distilled, organic-free water for dilution gas humidification.

A.4.2 Solvents and other VOC-containing liquids can contaminate the exposure chamber. Store and use solvents and other VOC-containing liquids in the exhaust hood when exposure experiments are in progress to prevent the possibility of contamination of VOCs into the chamber through the chamber's exhaust vent.

Note: Whenever possible, passive sorbent evaluation should be performed in a VOC free laboratory.

A.4.3 PSDs should be handled by personnel wearing only clean, white cotton or powder free nitrile gloves to prevent contamination of the PSDs with oils from the hands.

A.4.4 This performance evaluation procedure is applicable to only volatile materials that can be measured accurately with SUMMA canisters. Alternative methods to confirm the concentration of volatile materials in exposure chambers are subject to Administrator approval.

A.5 Safety

A.5.1 This procedure does not address all of the safety concerns associated with its use. It is the responsibility of the user of this standard to establish appropriate field and laboratory safety and health practices and determine the applicability of regulatory limitations prior to use.

A.5.2 Laboratory analysts must exercise appropriate care in working with high-pressure gas cylinders.

A.6 Equipment and Supplies

A.6.1 You must use an exposure chamber of sufficient size to simultaneously generate a minimum of four exposed sorbent tubes.

A.6.2 Your exposure chamber must not contain VOC that interfere with the compound under evaluation. Chambers made of glass and/or stainless steel have been used successfully for measurement of known concentration of selected VOC compounds.

A.6.3 The following equipment and supplies are needed:

- Clean, white cotton or nitrile gloves;
- Conditioned passive sampling device tubes and diffusion caps; and
- NIST traceable high resolution digital gas mass flow meters (MFMs) or flow controllers (MFCs).

A.7 Reagents and Standards

A.7.1 You must generate an exposure gas that contains between 35 and 75 percent relative humidity and a concentration of target compound(s) within 2 to 5 times the concentration to be measured in the field.

A.7.2 Target gas concentrations must be generated with certified gas standards and diluted with humid clean air. Dilution to reach the desired concentration must be done with zero grade air or better.

A.7.3 The following reagents and standards are needed:

- Distilled water for the humidification;
- VOC standards mixtures in high-pressure cylinder certified by the supplier (**Note:** The accuracy of the certified standards has a direct bearing on the accuracy of the measurement results. Typical vendor accuracy is ±5 percent accuracy but some VOC may only be available at lower accuracy (*e.g.,* acrolein at 10 percent); and
- Purified dilution air less than 0.2 ppbv of the target VOC.

A.8 Sample Collection, Preservation and Storage

A.8.1 You must use certified gas standards diluted with humid air. Generate humidified air by adding distilled organic free water to purified or zero grade air. Humidification may be accomplished by quantitative addition of water to the air dilution gas stream in a heated chamber or by passing purified air through a humidifying bubbler. You must measure the relative humidity in the test gas as part of the record of the passive sorbent sampler evaluation.

Note: The RH in the exposure chamber is directly proportional to the fraction of the purified air that passes through the water in the bubbler before entering the exposure chamber. Achieving uniform humidification in the proper range is a trial-and-error process with a humidifying bubbler. You may need to heat the bubbler to achieve sufficient humidity. An equilibration period of approximately 15 minutes is required following each adjustment of the air flow through the humidifier. Several adjustments or equilibration cycles may be required to achieve the desired RH level.

Note: You will need to determine both the dilution rate and the humidification rate for your design of the exposure chamber by trial and error before performing method evaluation tests.

A.8.2 Prepare and condition sorbent tubes following the procedures in Method 325B Section 7.0.

A.8.3 You must verify that the exposure chamber does not leak.

A.8.4 You must complete two evaluation tests using a minimum of eight passive sampling tubes in each test with less than 5-percent depletion of test analyte by the samplers.

A.8.4.1 Perform at least one evaluation at five times the estimated analytical detection limit or less.

A.8.4.2 Perform second evaluation at a concentration equivalent to the middle of the analysis calibration range.

A.8.5 You must evaluate the samplers in the test chamber operating between 35 percent and 50 percent RH, and at 25 ±5 °C. Allow the exposure chamber to equilibrate for 6 hours before starting an evaluation.

A.8.6 The flow rate through the chamber must equal 100 percent of the volume of the chamber per minute (*i.e.,* one chamber air change per minute) and be ≤ 0.5 meter per second face velocity across the sampler face.

A.8.7 Place clean, ready to use sorbent tubes into the exposure chamber for predetermined amounts of time to evaluate collection and recovery from the tubes. The exposure time depends on the concentration of volatile test material in the chamber and the detection limit required for the sorbent tube sampling application. Exposure time should match sample collection time. The sorbent tube exposure chamber time may not be less than 24 hours and should not be longer than 2 weeks.

A.8.7.1 To start the exposure, place the clean PSDs equipped with diffusion caps on the tube inlet into a retaining rack.

A.8.7.2 Place the entire retaining rack inside the exposure chamber with the diffusive sampling end of the tubes facing

into the chamber flow. Seal the chamber and record the exposure start time, chamber RH, chamber temperature, PSD types and numbers, orientation of PSDs, and volatile material mixture composition (see Figure A.2).

A.8.7.3 Diluted, humidified target gas must be continuously fed into the exposure chamber during cartridge exposure. Measure the flow rate of target compound standard gas and dilution air to an accuracy of 5 percent.

A.8.7.4 Record the time, temperature, and RH at hourly intervals or at the beginning, middle, and end of the exposure time, whichever is greater.

A.8.7.5 At the end of the exposure time, remove the PSDs from the exposure chamber. Record the exposure end time, chamber RH, and temperature.

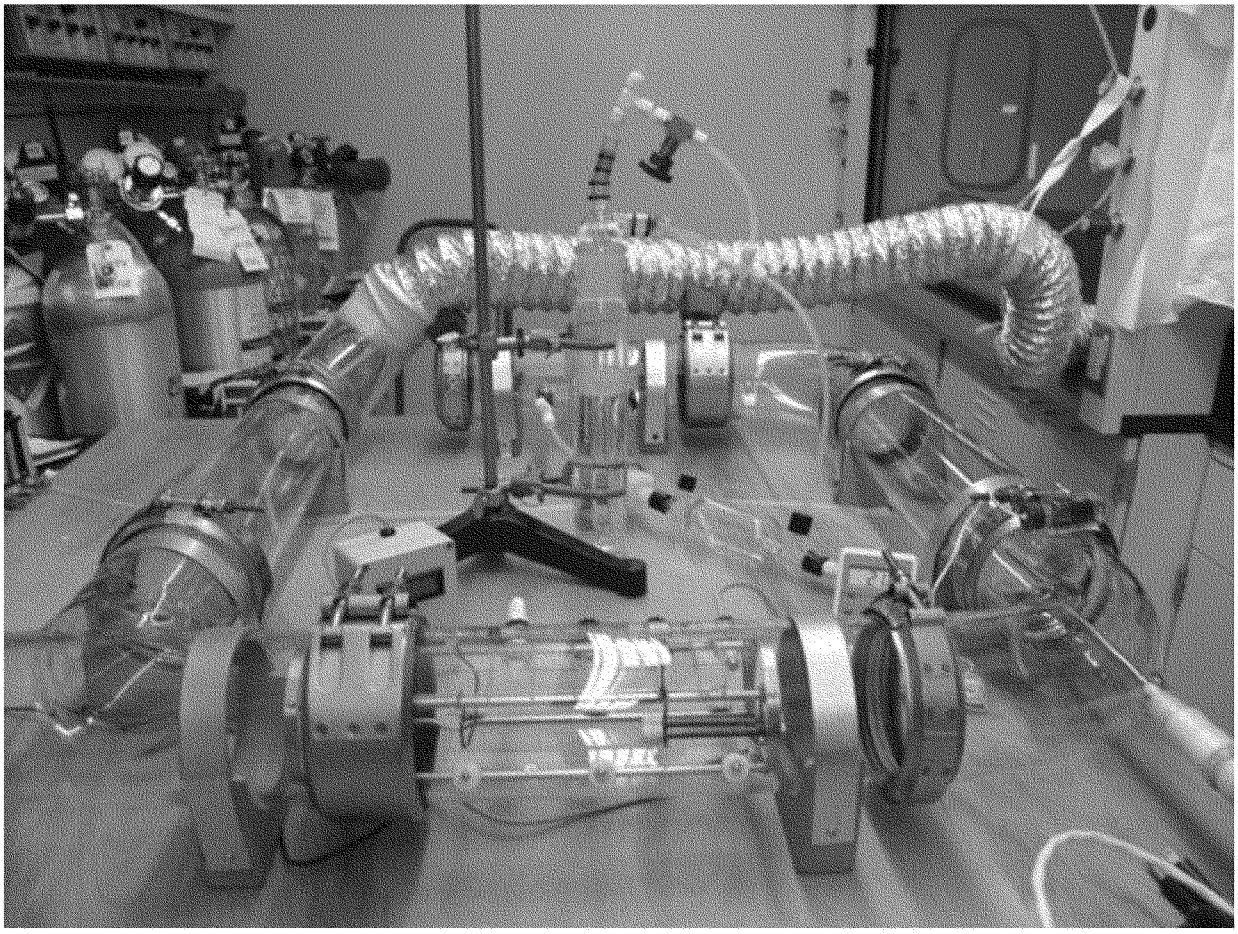

Figure A.1. Example Sorbent Tube Exposure Chamber

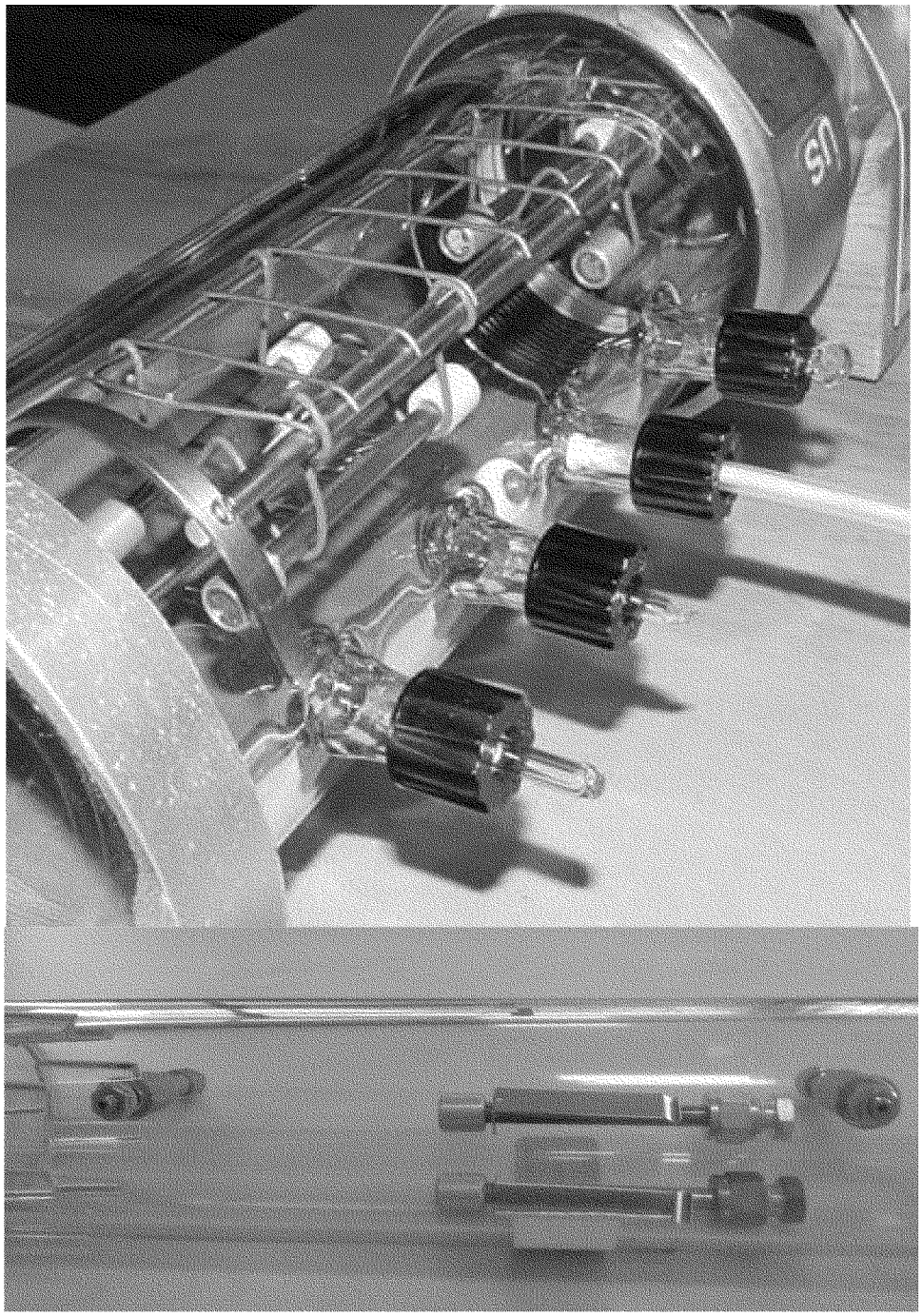

Figure A.2. Example Tube Retaining Rack in Exposure Chamber

A.9 Quality Control

A.9.1 Monitor and record the exposure chamber temperature and RH during PSD exposures.

A.9.2 Measure the flow rates of standards and purified house air immediately following PSD exposures.

A.10 Calibration and Standardization

A.10.1 Follow the procedures described in Method 325B Section 10.0 for calibration.

A.10.2 Verify chamber concentration by direct injection into a gas chromatograph calibrated for the target compound(s) or by collection of an integrated SUMMA canister followed by analysis using a preconcentration gas chromatographic method such as EPA Compendium Method TO–15, Determination of VOCs in Air Collected in Specially-Prepared Canisters and Analyzed By GC/MS.

A.10.2.1 To use direct injection gas chromatography to verify the exposure chamber concentration, follow the procedures in Method 18 of 40 CFR part 60, Appendix A–6.

A.10.2.2 To verify exposure chamber concentrations using SUMMA canisters, prepare clean canister(s) and measure the concentration of VOC collected in an integrated SUMMA canister over the period used for the evaluation (minimum 24 hours). Analyze the TO–15 canister sample following EPA Compendium Method TO–15.

A.10.2.3 Compare the theoretical concentration of volatile material added to the test chamber to the measured concentration to confirm the chamber operation. Theoretical concentration must

agree with the measured concentration within 30 percent.

A.11 Analysis Procedure

Analyze the sorbent tubes following the procedures described in Section 11.0 of Method 325B.

A.12 Recordkeeping Procedures for Sorbent Tube Evaluation

Keep records for the sorbent tube evaluation to include at a minimum the following information:

A.12.1 Sorbent tube description and specifications.

A.12.2 Sorbent material description and specifications.

A.12.3 Volatile analytes used in the sampler test.

A.12.4 Chamber conditions including flow rate, temperature, and relative humidity.

A.12.5 Relative standard deviation of the sampler results at the conditions tested.

A.12.6 95 percent confidence limit on the sampler overall accuracy.

A.12.7 The relative accuracy of the sorbent tube results compared to the direct chamber measurement by direct gas chromatography or SUMMA canister analysis.

A.13 Method Performance

A.13.1 Sorbent tube performance is acceptable if the relative accuracy of the passive sorbent sampler agrees with the active measurement method by ±10 percent at the 95 percent confidence limit and the uptake ratio is greater than 0.5 mL/min (1 ng/ppm-min).

Note: For example, there is a maximum deviation comparing Perkin-Elmer passive type sorbent tubes packed with Carbopack X of 1.3 to 10 percent compared to active sampling using the following uptake rates.

	1,3-butadiene uptake rate mL/min	Estimated detection limit (2 week)	Benzene uptake rates mL/min	Estimated detection limit (2 week)
Carbopack X (2 week)	0.61 ± 0.11 [a]	0.1 ppbv	0.67 [a]	0.05 ppbv

[a] McClenny, W.A., K.D. Oliver, H.H. Jacumin, Jr., E.H. Daughtrey, Jr., D.A. Whitaker. 2005. 24 h diffusive sampling of toxic VOCs in air onto Carbopack X solid adsorbent followed by thermal desorption/GC/MS analysis—laboratory studies. J. Environ. Monit. 7:248–256.

A.13.2 Data Analysis and Calculations for Method Evaluation

A.13.2.1 Calculate the theoretical concentration of VOC standards using Equation A.1.

$$C_f = \left[\frac{FR_i}{FR_t + FR_a}\right] \times C_s \qquad \text{Eq. A.1}$$

Where:

C_f = The final concentration of standard in the exposure chamber (ppbv).

FR_i = The flow rate of the target compound I (mL/min).

FR_t = The flow rate of all target compounds from separate if multiple cylinders are used (mL/min).

FR_a = The flow rate of dilution air plus moisture (mL/min).

C_s = The concentration of target compound in the standard cylinder (parts per million by volume).

A.13.2.3 Determine the uptake rate of the target gas being evaluated using Equation A.2.

$$U = \frac{M_x}{C_e \times T_t} \qquad \text{Eq. A.2}$$

Where:

M_x = The mass of analyte measured on the sampling tube (ηg).

C_e = The theoretical exposure chamber concentration (ηg/mL).

T_t = The exposure time (minutes).

A.13.2.4 Estimate the variance (relative standard deviation (RSD)) of the inter-sampler results at each condition tested using Equation A.3. RSD for the sampler is estimated by pooling the variance estimates from each test run.

$$S^2 = \sum_i^n \frac{\left(X_i - \overline{X}\right)^2}{n-1} \qquad \text{Eq. A.3}$$

Where:

X_i = The measured mass of analyte found on sorbent tube *i*.

$\overline{X}_i$ = The mean value of all X_i.

n = The number of measurements of the analyte.

A.13.2.4 Determine the percent relative standard deviation of the inter-sampler results using Equation A.4.

$$\%RSD_x = 100 \times \frac{\sqrt{S^2}}{\overline{X}} \qquad \text{Eq. A.4}$$

A.13.2.5 Determine the 95 percent confidence interval for the sampler results using Equation A.5. The confidence interval is determined based on the number of test runs performed to evaluate the sorbent tube and sorbent combination. For the minimum test requirement of eight samplers tested at two concentrations, the number of tests is 16 and the degrees of freedom are 15.

$$\Delta_{95\%} = \frac{\%RSD \times t_{0.95} \times f}{\sqrt{n}} \qquad \text{Eq. A.5}$$

Where:

$\Delta_{95\%}$ = 95 percent confidence interval.
%RSD = percent relative standard deviation.
$t_{0.95}$ = The Students t statistic for f degrees of freedom at 95 percent confidence.
f = The number of degrees of freedom.
n = Number of samples.

A.13.2.6 Determine the relative accuracy of the sorbent tube combination compared to the active sampling results using Equation A.6.

$$RA = \overline{X_i} - \overline{X_A} \pm \Delta_{95\%} \qquad \text{Eq. A.6}$$

Where:

RA = Relative accuracy.
$\overline{X}_i$ = The mean value of all X_i.
$\overline{X}_A$ = The average concentration of analyte measured by the active measurement method.
$\Delta_{95\%}$ = 95 percent confidence interval.

A.14 Pollution Prevention

This method involves the use of ambient concentrations of gaseous compounds that post little or no pollution to the environment.

A.15 Waste Management

Expired calibration solutions should be disposed of as hazardous materials.

A.16 References

1. ISO TC 146/SC 02 N 361 Workplace atmospheres—Protocol for evaluating the performance of diffusive samplers.

[FR Doc. 2014–12167 Filed 6–26–14; 8:45 am]

BILLING CODE 6560–50–P