AUTHENTICATED
U.S. GOVERNMENT
INFORMATION
GPO

12–13–93
Vol. 58 No. 237

federal register

Monday
December 13, 1993

United States
Government
Printing Office
SUPERINTENDENT
OF DOCUMENTS
Washington, DC 20402

OFFICIAL BUSINESS
Penalty for private use, $300

SECOND CLASS NEWSPAPER
Postage and Fees Paid
U.S. Government Printing Office
(ISSN 0097–6326)

12–13–93
Vol. 58 No. 237
Pages 65099–65276

federal register

Monday
December 13, 1993

Briefings on How To Use the Federal Register
For information on briefings in Washington, DC, see announcement on the inside cover of this issue.

FEDERAL REGISTER Published daily, Monday through Friday, (not published on Saturdays, Sundays, or on official holidays), by the Office of the Federal Register, National Archives and Records Administration, Washington, DC 20408, under the Federal Register Act (49 Stat. 500, as amended; 44 U.S.C. Ch. 15) and the regulations of the Administrative Committee of the Federal Register (1 CFR Ch. I). Distribution is made only by the Superintendent of Documents, U.S. Government Printing Office, Washington, DC 20402.

The **Federal Register** provides a uniform system for making available to the public regulations and legal notices issued by Federal agencies. These include Presidential proclamations and Executive Orders and Federal agency documents having general applicability and legal effect, documents required to be published by act of Congress and other Federal agency documents of public interest. Documents are on file for public inspection in the Office of the Federal Register the day before they are published, unless earlier filing is requested by the issuing agency.

The seal of the National Archives and Records Administration authenticates this issue of the **Federal Register** as the official serial publication established under the Federal Register Act. 44 U.S.C. 1507 provides that the contents of the **Federal Register** shall be judicially noticed.

The **Federal Register** is published in paper, 24x microfiche format and magnetic tape. The annual subscription price for the **Federal Register** paper edition is $375, or $415 for a combined **Federal Register**, Federal Register Index and List of CFR Sections Affected (LSA) subscription; the microfiche edition of the **Federal Register** including the Federal Register Index and LSA is $353; and magnetic tape is $37,500. Six month subscriptions are available for one-half the annual rate. The charge for individual copies in paper form is $4.50 for each issue, or $4.50 for each group of pages as actually bound; or $1.50 for each issue in microfiche form; or $175.00 per magnetic tape. All prices include regular domestic postage and handling. International customers please add 25% for foreign handling. Remit check or money order, made payable to the Superintendent of Documents, or charge to your GPO Deposit Account, VISA or MasterCard. Mail to: New Orders, Superintendent of Documents, P.O. Box 371954, Pittsburgh, PA 15250–7954.

There are no restrictions on the republication of material appearing in the **Federal Register.**

How To Cite This Publication: Use the volume number and the page number. Example: 58 FR 12345.

SUBSCRIPTIONS AND COPIES

PUBLIC

Subscriptions:

Paper or fiche	202–783–3238
Magnetic tapes	512–1530
Problems with public subscriptions	512–2303

Single copies/back copies:

Paper or fiche	783–3238
Magnetic tapes	512–1530
Problems with public single copies	512–2457

FEDERAL AGENCIES

Subscriptions:

Paper or fiche	523–5243
Magnetic tapes	512–1530
Problems with Federal agency subscriptions	523–5243

For other telephone numbers, see the Reader Aids section at the end of this issue.

THE FEDERAL REGISTER
WHAT IT IS AND HOW TO USE IT

FOR: Any person who uses the Federal Register and Code of Federal Regulations.

WHO: The Office of the Federal Register.

WHAT: Free public briefings (approximately 3 hours) to present:

1. The regulatory process, with a focus on the Federal Register system and the public's role in the development of regulations.
2. The relationship between the Federal Register and Code of Federal Regulations.
3. The important elements of typical Federal Register documents.
4. An introduction to the finding aids of the FR/CFR system.

WHY: To provide the public with access to information necessary to research Federal agency regulations which directly affect them. There will be no discussion of specific agency regulations.

WASHINGTON, DC
(TWO BRIEFINGS)

WHEN: January 13 at 9:00 am and 1:30 pm

WHERE: Office of the Federal Register, 7th Floor Conference Room, 800 North Capitol Street NW, Washington, DC (3 blocks north of Union Station Metro)

RESERVATIONS: 202–523–4538

Printed on recycled paper containing 100% post consumer waste

Contents

Federal Register

Vol. 58, No. 237

Monday, December 13, 1993

Agricultural Marketing Service
RULES
Kiwifruit grown in California, 65101
PROPOSED RULES
Milk marketing orders:
Georgia, 65135

Agriculture Department
See Agricultural Marketing Service
See Animal and Plant Health Inspection Service
See Commodity Credit Corporation
See Food Safety and Inspection Service

Alcohol, Tobacco and Firearms Bureau
RULES
Alcohol, viticultural area designations:
Mt. Veeder, CA, 65123

Animal and Plant Health Inspection Service
RULES
Exportation and importation of animals and animal products:
Bovine spongiform encephalopathy (BSE); animal products and byproducts prohibitions and restrictions—
Portugal added to list, 65103

Arts and Humanities, National Foundation
See National Foundation on the Arts and the Humanities

Coast Guard
RULES
Vessel documentation and measurement:
Vessel documentation, instruments recording practices, and fees
Correction, 65130, 65243
PROPOSED RULES
Anchorage regulations:
Wisconsin, 65140

Commerce Department
See Foreign-Trade Zones Board
See International Trade Administration
See National Oceanic and Atmospheric Administration

Committee for the Implementation of Textile Agreements
NOTICES
Cotton, wool, and man-made textiles:
Guatemala, 65158
Malaysia, 65159
Oman, 65160
Sri Lanka, 65161
United Arab Emirates, 65160

Commodity Credit Corporation
RULES
Loan and purchase programs:
Upland and extra long staple cotton; bale packaging materials specifications, 65102

Customs Service
PROPOSED RULES
Entry process:
Entry documentation prefiling, 65135
NOTICES
Merchandise, special classes:
China; importation of convict, forced, or indentured labor made goods—
Beijing Qinghe Hosiery Factory, 65235

Defense Department
See Navy Department
NOTICES
Federal Acquisition Regulation (FAR):
Agency information collection activities under OMB review, 65162
Meetings:
Wage Committee, 65161

Employment and Training Administration
NOTICES
Adjustment assistance:
Carborundum Co., 65196
General Dynamics, 65194
JC & Me et al., 65194
Jones & Lamson Waterbury Farrell Corp., 65195
Leslie Fay, 65195
Meetings:
Unemployment Compensation Advisory Council, 65196

Energy Department
See Federal Energy Regulatory Commission
See Western Area Power Administration
NOTICES
Electricity export and import authorizations, permits, etc.:
San Diego Gas & Electric Co., 65163
Public Utility Regulatory Policies Act:
Gas and electric utilities covered in 1994; list, 65169

Environmental Protection Agency
NOTICES
Agency information collection activities under OMB review, 65181, 65182
Superfund; response and remedial actions, proposed settlements, etc.:
Capitol Assay Laboratories Site, MD, 65182
Endicott Wellfield Site, NY, 65183

Executive Office of the President
See Management and Budget Office
See Presidential Documents

Federal Aviation Administration
RULES
Airworthiness directives:
Piper, 65104, 65115
NOTICES
Exemption petitions; summary and disposition, 65223
Passenger facility charges; applications, etc.:
Metropolitan Oakland International Airport, CA, 65225
Richmond International Airport, VA, 65226

Federal Communications Commission
RULES
Radio stations; table of assignments:
Georgia, 65132
Oklahoma, 65132
Tennessee, 65133
Television broadcasting:
Financial interest and syndication rules, 65132
PROPOSED RULES
Common carrier services:
Toll fraud; policies and rules, 65153
Radio stations; table of assignments:
Alabama et al., 65155
California, 65155

Federal Deposit Insurance Corporation
NOTICES
Foreclosure consent and redemption rights:
Liquidation update list, 65183
Meetings; Sunshine Act, 65238

Federal Emergency Management Agency
NOTICES
Offsite radiological emergency preparedness program; service fees, 65274

Federal Energy Regulatory Commission
NOTICES
Electric rate, small power production, and interlocking directorate filings, etc.:
New York State Electric & Gas Corp. et al., 65164
Hydroelectric applications, 65165
Meetings; Sunshine Act, 65238
Natural gas certificate filings:
Columbia Gas Transmission Co. et al., 65167
Preliminary permits surrender:
Ida-West Energy Co., 65168
Applications, hearings, determinations, etc.:
Algonquin Gas Transmission Co., 65168

Federal Maritime Commission
NOTICES
Agreements filed, etc., 65184

Federal Reserve System
NOTICES
Meetings; Sunshine Act, 65241

Federal Trade Commission
NOTICES
Meetings; Sunshine Act, 65242

Food and Drug Administration
PROPOSED RULES
Food additives:
Substances used in food-contact articles; regulation threshold, 65139
Food for human consumption:
Enriched grain product identity standards; folic acid addition; correction, 65276
NOTICES
Prescription Drug User Fee Act:
Prescription drug user fee revenues and rates, 1994 FY; establishment, 65184

Food Safety and Inspection Service
RULES
Meat and poultry inspection:
Accreditation fees, standards, and procedures for FSIS accredited laboratories, 65254

Foreign-Trade Zones Board
NOTICES
Applications, hearings, determinations, etc.:
Connecticut, 65157

General Services Administration
NOTICES
Federal Acquisition Regulation (FAR):
Agency information collection activities under OMB review, 65162
Meetings:
African Burial Ground Steering Committee, 65184

Health and Human Services Department
See Food and Drug Administration
See Health Care Financing Administration
See National Institutes of Health
See Social Security Administration

Health Care Financing Administration
RULES
Medicare:
Intermediary and carrier checks that are lost, stolen, defaced, mutilated, destroyed or paid on forged endorsements, 65126
PROPOSED RULES
Medicare:
Interest expense and income from zero coupon bonds; reporting by providers, 65150
NOTICES
Medicare:
Peer review organizations—
Contract obligation performance evaluation general criteria and standards, 65186

Indian Affairs Bureau
RULES
Heritage preservation:
Archaeological resources; protection, 65246
NOTICES
Tribal-State Compacts approval; Class III (casino) gambling:
St. Regis Mohawk Tribe, NY, 65272

Interior Department
See Indian Affairs Bureau
See Land Management Bureau
See National Park Service

International Trade Administration
NOTICES
Applications, hearings, determinations, etc.:
Agriculture Department et al., 65157

Labor Department
See Employment and Training Administration
NOTICES
NAFTA transitional adjustment assistance program; agency information collection activities under OMB review, 65194

Land Management Bureau
RULES
Public land orders:
Alaska, 65130

NOTICES
Environmental statements; availability, etc.:
Cyprus Casa Grande Mine, AZ, 65191
General Land Office; automated records project; patent data availability, 65191

Legal Services Corporation
NOTICES
Meetings; Sunshine Act, 65242

Management and Budget Office
NOTICES
Balanced Budget and Emergency Deficit Control Reaffirmation Act (Gramm-Rudman-Holings):
Sequestration update report; transmittal to President and Congress, 65201

National Aeronautics and Space Administration
NOTICES
Federal Acquisition Regulation (FAR):
Agency information collection activities under OMB review, 65162

National Foundation on the Arts and the Humanities
NOTICES
Meetings:
Humanities Panel, 65196

National Highway Traffic Safety Administration
PROPOSED RULES
Motor vehicle safety standards:
Air and hydraulic brake systems—
Stability and control of medium and heavy vehicles during braking, 65156

National Institutes of Health
NOTICES
Meetings:
National Cancer Institute, 65189

National Oceanic and Atmospheric Administration
RULES
Fishery conservation and management:
Summer flounder, 65134
Marine mammals:
Taking and importing; moratorium waiver, 65133
NOTICES
Permits:
Marine mammals, 65158

National Park Service
PROPOSED RULES
National Park System; solid waste disposal sites; restriction on new sites, 65141
NOTICES
Grants and cooperative agreements; availability, etc.:
Urban park and recreation recovery rehabilitation and innovation program, 65191
Meetings:
National Park System Advisory Board, 65193

Navy Department
NOTICES
Environmental statements; availability, etc.:
Base realignment and closures—
Naval Air Station Lemoore, CA, 65162

Nuclear Regulatory Commission
NOTICES
Environmental statements; availability, etc.:
Cleveland Electric Illuminating Co. et al., 65197
Memorandums of understanding:
NRC emergency response data system utilization—
Arkansas, 65197
Applications, hearings, determinations, etc.:
Gulf States Utilities Co. et al., 65200
Northeast Nuclear Energy Co., 65200

Office of Management and Budget
See Management and Budget Office

Peace Corps
NOTICES
Agency information collection activities under OMB review, 65201

Personnel Management Office
RULES
Retirement:
Civil Service Retirement System—
Law enforcement officers and firefighters; correction, 65243

Presidential Documents
ADMINISTRATIVE ORDERS
Soviet Union, former, Independent States of, assistance program (Presidential Determination No. 94-6 of December 6, 1993), 65099

Public Health Service
See Food and Drug Administration
See National Institutes of Health

Research and Special Programs Administration
NOTICES
Applications, hearings, determinations, etc.:
Chemical Waste Transportation Institute, 65226

Securities and Exchange Commission
NOTICES
Self-regulatory organizations; proposed rule changes:
American Stock Exchange, Inc., 65201
Chicago Board Options Exchange, Inc., 65204, 65207
Midwest Securities Trust Co., 65209
National Association of Securities Dealers, Inc., 65210, 65214
New York Stock Exchange, Inc., 65215
Pacific Stock Exchange, Inc., 65218
Philadelphia Stock Exchange, Inc., 65221

Social Security Administration
RULES
Social security benefits:
Disability and blindness determinations—
Various body system listings; expiration date extension; correction, 65243
NOTICES
Social security rulings:
Child beneficiary disappearance; restriction against payment to missing beneficiary, 65190

State Department
RULES
Longshore work by U.S. nationals; foreign prohibitions, 65118

Textile Agreements Implementation Committee
See Committee for the Implementation of Textile Agreements

Transportation Department
See Coast Guard
See Federal Aviation Administration
See National Highway Traffic Safety Administration
See Research and Special Programs Administration

Treasury Department
See Alcohol, Tobacco and Firearms Bureau
See Customs Service
NOTICES
Agency information collection activities under OMB review, 65228, 65232, 65233, 65234

United States Information Agency
NOTICES
Art objects; importation for exhibition:
Currency of Fame: Portrait Medals of the Renaissance, 65235
Meetings:
Public Diplomacy, U.S. Advisory Commission, 65235

Veterans Affairs Department
NOTICES
Agency information collection activities under OMB review
Daily report of workman and material—daily log-formal contract, 65237
Inquiry concerning applicant for employment, 65235
Manufactured home unit; loan amount computation, 65236
Notice for election to convey and/or invoice for transfer of property, 65236

Western Area Power Administration
NOTICES
Salt Lake City Area/Integrated Projects; Provo River Project inclusion, 65180

Separate Parts In This Issue

Part II
Department of the Interior, Bureau of Indian Affairs, 65246

Part III
Department of Agriculture, Food Safety and Inspection Service, 65254

Part IV
Department of Agriculture, Food Safety and Inspection Service, 65272

Part V
Federal Emergency Management Agency, 65274

Part VI
Department of Health and Human Services, Food and Drug Administration 65276

Reader Aids
Additional information, including a list of public laws, telephone numbers, and finding aids, appears in the Reader Aids section at the end of this issue.

Electronic Bulletin Board
Free **Electronic Bulletin Board** service for Public Law numbers and **Federal Register** finding aids is available on 202–275–1538 or 275–0920.

CFR PARTS AFFECTED IN THIS ISSUE

A cumulative list of the parts affected this month can be found in the Reader Aids section at the end of this issue.

3 CFR
Administrative Orders:
Presidential Determinations:
No. 94–6 of December 6, 1993.....65099

5 CFR
831.....65243

7 CFR
920.....65101
1427.....65102
Proposed Rules:
1007.....65135

9 CFR
94.....65103
318.....65254
381.....65254
391.....65254

14 CFR
39 (2 documents).....65104, 65115

19 CFR
Proposed Rules:
141.....65135
142.....65135

20 CFR
404.....65243

21 CFR
Proposed Rules:
5.....65139
25.....65139
170.....65139
171.....65139
174.....65139

22 CFR
89.....65118

25 CFR
262.....65246

27 CFR
9.....65123
Proposed Rules:

33 CFR
110.....65140

36 CFR
Proposed Rules:
6.....65141

42 CFR
424.....65126
Proposed Rules:
413.....65150

43 CFR
Public Land Orders:
7021.....65130

46 CFR
1.....65130
67 (2 documents).....65130, 65243

47 CFR
73 (4 documents).....65132, 65133
Proposed Rules:
68.....65153
73 (2 documents).....65155

49 CFR
Proposed Rules:
571.....65156

50 CFR
216.....65133
625.....65134

Federal Register
Vol. 58, No. 237
Monday, December 13, 1993

Presidential Documents

Title 3—

The President

Presidential Determination No. 94–6 of December 6, 1993

Assistance Program for Independent States of the Former Soviet Union

Memorandum for the Secretary of State

Pursuant to section 560 and 577 of the Foreign Operations, Export Financing, and Related Programs Appropriations Act, 1994 (Titles I–V of Public Law 103–87) (the "Act"), I hereby determine that it is in the national interest of the United States to make available funds appropriated under the Act without regard to the restriction contained in section 560(g) of the Act, and certify that Russia and the Commonwealth of Independent States continue to make substantial progress toward the withdrawal of their armed forces from Latvia and Estonia.

You are authorized and directed to notify the Congress of this determination and certification, and to publish it in the **Federal Register.**

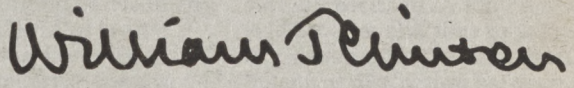

THE WHITE HOUSE,
Washington, December 6, 1993.

[FR Doc. 93–30493
Filed 12–9–93; 2:36 pm]
Billing code 4710–10–M

Rules and Regulations

Federal Register
Vol. 58, No. 237
Monday, December 13, 1993

This section of the FEDERAL REGISTER contains regulatory documents having general applicability and legal effect, most of which are keyed to and codified in the Code of Federal Regulations, which is published under 50 titles pursuant to 44 U.S.C. 1510.

The Code of Federal Regulations is sold by the Superintendent of Documents. Prices of new books are listed in the first FEDERAL REGISTER issue of each week.

DEPARTMENT OF AGRICULTURE

Agricultural Marketing Service

7 CFR Part 920

[Docket No. FV92–920–1FR]

Kiwifruit Grown in California; Clarification in the Definition of the Term Kiwifruit

AGENCY: Agricultural Marketing Service, USDA.

ACTION: Final rule.

SUMMARY: This rule terminates an obsolete portion of the provision of the California kiwifruit marketing order defining the term "kiwifruit." The purpose of this rule is to bring the order into conformity with the currently accepted scientific definition of the commodity covered by the marketing order.

EFFECTIVE DATE: January 12, 1994.

FOR FURTHER INFORMATION CONTACT: Caroline C. Thorpe, Marketing Order Administration Branch, F&V, AMS, USDA, room 2522–S, P.O. Box 96456, Washington, DC 20090–6456; telephone: (202) 720–5127; or Rose M. Aguayo, California Marketing Field Office, Marketing Order Administration Branch, F&V, AMS, USDA, 2202 Monterey Street, suite 102B, Fresno, California 93721; telephone: (209) 487–5901.

SUPPLEMENTARY INFORMATION: This rule is issued under Marketing Agreement and Order No. 920 (7 CFR part 920), as amended, regulating the handling of kiwifruit grown in California, hereinafter referred to as the "order." The order is effective under the Agricultural Marketing Agreement Act of 1937, as amended (7 U.S.C. 601–674), hereinafter referred to as the "Act."

The Department is issuing this rule in conformance with Executive Order 12866.

This action has been reviewed under Executive Order 12778, Civil Justice Reform. This action is not intended to have retroactive effect. This action will not preempt any state or local laws, regulations, or policies, unless they present an irreconcilable conflict with this rule.

The Act provides that administrative proceedings must be exhausted before parties may file suit in court. Under section 8c(15)(A) of the Act, any handler subject to an order may file with the Secretary a petition stating that the order, any provision of the order, or any obligation imposed in connection with the order is not in accordance with law and requesting a modification of the order or to be exempted therefrom. A handler is afforded the opportunity for a hearing on the petition. After the hearing the Secretary would rule on the petition. The Act provides that the district court of the United States in any district in which the handler is an inhabitant, or has his or her principal place of business, has jurisdiction in equity to review the Secretary's ruling on the petition, provided a bill in equity is filed not later than 20 days after date of the entry of the ruling.

Pursuant to requirements set forth in the Regulatory Flexibility Act (RFA), the Administrator of the Agricultural Marketing Service (AMS) has considered the economic impact of this action on small entities.

The purpose of the RFA is to fit regulatory actions to the scale of business subject to such actions in order that small businesses will not be unduly or disproportionately burdened. Marketing orders issued pursuant to the Act, and rules issued thereunder, are unique in that they are brought about through group action of essentially small entities acting on their own behalf. Thus, both statutes have small entity orientation and compatibility.

There are approximately 65 handlers of California kiwifruit subject to regulation under the order, and approximately 600 producers in the regulated area. Small agricultural producers have been defined by the Small Business Administration (13 CFR 121.601) as those having annual receipts of less than $500,000, and small agricultural service firms are defined as those whose annual receipts are less than $3,500,000. The majority of producers and a majority of handlers of California kiwifruit may be classified as small entities.

This rule terminates a portion of an order provision defining the term "kiwifruit." This rule was unanimously recommended by the Kiwifruit Administrative Committee (committee), the agency responsible for local administration of the order.

At the time the order was promulgated in 1984, the accepted botanical classification for kiwifruit grown in California was *Actinidia chinensis*, Planch. and was based on the work of C.F. Liang in 1975. As a result, kiwifruit was initially defined in § 920.5 [7 CFR 920.5] under the botanical name *A. chinensis*, Planch. Shortly thereafter, the scientific community determined that the botanical nomenclature used to classify California kiwifruit should be changed. It was found that the nomenclature for kiwifruit had been earlier described by the French botanist A. Chevalier and thus took precedence. A. Chevalier first made a detailed botanical distinction between the variants of *A. chinensis* in 1946. These were described as *A. chinensis* Planch. *var. deliciosa* and *A. chinensis* Planch. *var. chinensis.*

Subsequently, based on comprehensive studies of *A. chinensis* by three other taxonomic botanists (H.L. Li, C.F. Liang, and A.R. Ferguson), it was determined that enough difference existed between the variants to warrant raising them to separate species status. Thus in 1984 or 1985, botanical nomenclature was revised to reflect three separate species: *A. chinensis*, *A. deliciosa*, and *A. setosa.*

Under the new botanical nomenclature, *A. chinensis* is seldom found outside of China and *A. setosa* is seldom found outside of Taiwan. The prevalent commercial variety grown in California is the Hayward variety. Other varieties commercially grown include Abbott, Allison, Monty, and Bruno. All of these varieties are now classified under the species *A. deliciosa var. deliciosa.*

Thus, the language "*Actinidia chinensis*, Planch., commonly called" found in § 920.5 (7 CFR 920.5) of the marketing order is obsolete. Terminating this language eliminates any confusion caused by the change in nomenclature by the scientific community. The intent of the marketing order is to cover all varieties of kiwifruit, including any new

varieties, that are commercially produced in California. Therefore, it has been determined that the generic term "kiwifruit" is sufficient to define the commodity covered under the marketing order.

A proposed rule to terminate the obsolete portion of § 920.5 (7 CFR 920.5) was published in the **Federal Register** June 15, 1993, (58 FR 33035) with a 15-day comment period ending June 30, 1993. One comment was received.

Mr. Roger Meyer of Fountain Valley, California, filed a comment requesting that the terminology in the order be more specific to be more consistent with scientific language. Mr. Meyer suggested that the generic term "kiwifruit" may be interpreted to include other members of the genus *Actinidia* and should be further defined by the species *A. deliciosa var. deliciosa*. For example, he mentioned the species *A. arguta*, a common garden variety, that may fall under the generic term "kiwifruit" since it is often referred to as "hardy kiwifruit." Such fruit is green and smooth unlike commercial varieties grown in California that are brown, fuzzy, and larger in size. Such a species is not regularly sold in the fresh market to consumers, and thus is not encompassed by this definition. The intent of the order, as promulgated, is to cover fruit commonly recognized in the market place as kiwifruit of the genus *Actinidia* and the species grown in the marketing area for the fresh market. As discussed earlier, it was commonly accepted when the order was promulgated, that such fruit be known as *A. chinensis*. Although the scientific community has changed this terminology, the general appearance, size, and other characteristics of kiwifruit which has been subject to regulation has not changed. Therefore, there should be no confusion regarding the commodity covered. In the event this should occur, however, the agency will take further steps to clarify the scope of the order through rulemaking. Mr. Meyer's request is therefore denied.

This rule will not have a significant economic impact on small producers or handlers. The rule updates the definition of "kiwifruit" to include the same varieties that are covered under the order.

Based on available information, the Administrator of the AMS has determined that this action will not have a significant economic impact on a substantial number of small entities.

After consideration of all relevant matter presented, the information and recommendations submitted by the committee, and other information, it is found that the definition of the term "kiwifruit" in § 920.5 of the order has become obsolete and that retaining such definition does not tend to effectuate the declared policy of the Act. Therefore, this termination rule removes the language "*Actinidia chinensis*, Planch., commonly called" from such definition in order to bring it into conformity with the currently accepted scientific definition of the covered commodity.

List of Subjects in 7 CFR Part 920

Kiwifruit, Marketing agreements.

For the reasons set forth in the preamble, 7 CFR part 920 is amended as follows:

PART 920—KIWIFRUIT GROWN IN CALIFORNIA

1. The authority citation for 7 CFR part 920 is revised to read as follows:

Authority: 7 U.S.C. 601–674.

2. Section 920.5 is revised to read as follows:

§ 920.5 Kiwifruit.

Kiwifruit means all varieties of kiwifruit, or kiwi grown in the production area.

Dated: December 7, 1993.

Patricia Jensen,

Deputy Assistant Secretary, Marketing and Inspection Services.

[FR Doc. 93–30297 Filed 12–10–93; 8:45 am]

BILLING CODE 3410–02–P

Commodity Credit Corporation

7 CFR Part 1427

RIN 0560–AD44

1993 Specifications for Cotton Bale Packaging Materials

AGENCY: Commodity Credit Corporation, USDA.

ACTION: Final rule.

SUMMARY: On October 6, 1993, the Commodity Credit Corporation (CCC) issued an interim rule with respect to the cotton price support program which is conducted by the CCC in accordance with The Agricultural Act of 1949, as amended (the 1949 Act). The interim rule provided greater clarity, enhanced the administration of CCC programs by providing uniformity between CCC price support programs, eliminated obsolete provisions, and more appropriately reflected loan eligibility quality requirements for the 1993 and subsequent year crops. This rule adopts as final the interim rule published on October 6, 1993.

EFFECTIVE DATE: December 13, 1993. The incorporation by reference of a certain publication listed in the regulations is approved by the Director of the Federal Register as of December 13, 1993.

FOR FURTHER INFORMATION CONTACT: Philip Sharp, Program Specialist, Cotton, Grain, and Rice Price Support Division, Agricultural Stabilization and Conservation Service, United States Department of Agriculture (USDA), P.O Box 2415, Washington, DC 20013–2415; telephone 202–720–7988.

SUPPLEMENTARY INFORMATION:

Executive Order 12866

This final rule is issued in conformance with Executive Order 12866. Based on information compiled USDA, it has been determined that this final rule:

(1) Would have an annual effect on the economy of less than $100 million;

(2) Would not adversely affect in a material way the economy, a sector of the economy, productivity, competition, jobs, the environment, public health or safety, or State, local, or tribal governments or communities;

(3) Would not create a serious inconsistency or otherwise interfere with an action taken or planned by another agency;

(4) Would not alter the budgetary impact of entitlements, grants, user fees, or loan programs or rights and obligations of recipients thereof; and

(5) Would not raise novel legal or policy issues arising out of legal mandates, the President's priorities, or principles set forth in Executive Order 12866.

Regulatory Flexibility Act

It has been determined that the Regulatory Flexibility Act is not applicable to this interim rule since the CCC is not required by 5 U.S.C. 553 or any other provision of law to publish a notice of proposed rulemaking with respect to the subject matter of these determinations.

Environmental Evaluation

It has been determined by an environmental evaluation that this action will not have a significant impact on the quality of human environment. Therefore, neither an Environmental Assessment nor an Environmental Impact Statement is needed.

Federal Assistance Program

The title and number of the Federal Assistance Program, as found in the Catalog of Federal Domestic Assistance, to which this rule applies are: Commodity Loans and Purchases—10.051.

Executive Order 12778

This final rule has been reviewed in accordance with Executive Order 12778, Civil Justice Reform. The provisions of this final rule do not preempt State laws and are not retroactive. Before any judicial action may be brought with respect to the provisions of this final rule, administrative appeal remedies at 7 CFR part 780 must be exhausted.

Executive Order 12372

This program is not subject to the provisions of Executive Order 12372, which requires intergovernmental consultation with State and local officials. See the Notice related to 7 CFR part 3015, subpart V, published at 48 FR 29115 (June 24, 1983).

Paperwork Reduction Act

The amendments to 7 CFR part 1427 set forth in this final rule do not contain any new or revised information collection requirements that require clearance through the Office of Management and Budget (OMB) under the provisions of 44 U.S.C. chapter 35. The information collection requirements contained in the current regulations at 7 CFR part 1427 have been approved through August 31, 1994, by the OMB under the provisions of 44 U.S.C. chapter 35, and assigned OMB Nos. 0560–0074, 0560–0087, and 0560–0029. Public reporting burden for these collections is estimated to average 15 minutes per response, including the time for reviewing instructions, searching existing data sources, gathering and maintaining the data needed, and completing and reviewing the collection of information. Send comments regarding this burden estimate or any other aspect of the information collection requirements, including suggestions for reducing the burden, to the Department of Agriculture, Clearance Office, OIRM, AG Box 7630, Washington DC 20250; and to the Office of Management and Budget, Paperwork Reduction Project (OMB Nos. 0560–0074, 0560–0087, and 0560–0129), Washington DC 20503.

Discussion of Comments

One letter was timely received in response to the interim rule published on October 6, 1993, requesting public comments on the interim regulations for implementing the price support loan programs for upland cotton and extra long staple cotton which are conducted by the CCC.

The respondent supported the adoption of the interim rule as published.

Accordingly, under the authority of 7 U.S.C. 1421, 1423, 1425, 1444, and 1444–2; 15 U.S.C. 714b and 714c, the interim rule amending 7 CFR part 1427 that was published at 58 FR 51986 on October 6, 1993, is adopted as a final rule without change.

Signed in Washington, DC on December 3, 1993.

Bruce R. Weber,

Acting Executive Vice President, Commodity Credit Corporation.

[FR Doc. 93–30378 Filed 12–10–93; 8:45 am]

BILLING CODE 3410–05–P

Animal and Plant Health Inspection Service

9 CFR Part 94

[Docket No. 93–149–1]

Importation of Animal Products and Byproducts From Countries Where BSE Exists; Addition of Portugal

AGENCY: Animal and Plant Health Inspection Service, USDA.

ACTION: Interim rule and request for comments.

SUMMARY: We are amending our regulations by adding Portugal to the list of countries where bovine spongiform encephalopathy (BSE) exists, because the disease has been diagnosed in cattle in that country. The effect of this action is to prohibit or restrict the importation of certain fresh, chilled, and frozen meat, and certain other animal products and animal byproducts from ruminants which have been in Portugal. This action is necessary to reduce the risk that BSE could be introduced into the United States.

DATES: Interim rule effective December 7, 1993. Consideration will be given only to comments received on or before February 11, 1994.

ADDRESSES: Please send an original and three copies of your comments to Chief, Regulatory Analysis and Development, PPD, APHIS, USDA, room 804, Federal Building, 6505 Belcrest Road, Hyattsville, MD 20782. Please state that your comments refer to Docket No. 93–149–1. Comments received may be inspected at USDA, room 1141, South Building, 14th Street and Independence Avenue SW., Washington, DC, between 8 a.m. and 4:30 p.m., Monday through Friday, except holidays. Persons wishing to inspect comments are encouraged to call ahead on (202) 690–2817 to facilitate entry into the comment reading room.

FOR FURTHER INFORMATION CONTACT: Dr. John Cougill, Staff Veterinarian, Import-Export Products Staff, National Center for Import-Export, Veterinary Services, APHIS, USDA, room 759, Federal Building, 6505 Belcrest Road, Hyattsville, MD 20782 (301) 436–7834.

SUPPLEMENTARY INFORMATION:

Background

The regulations in 9 CFR parts 94 and 95 (referred to below as the regulations) govern the importation of meat, animal products, animal byproducts, hay, and straw into the United States in order to prevent the introduction of various animal diseases, including bovine spongiform encephalopathy (BSE).

Bovine spongiform encephalopathy is a neurological disease of bovine animals and other ruminants. At the present time, BSE is not known to exist in the United States. Prior to this action, BSE was known to exist in France, Great Britain, Northern Ireland, the Republic of Ireland, Oman, and Switzerland.

The major means of spread of BSE appears to be through the use of ruminant feed containing protein and other products from ruminants infected with BSE. Therefore, BSE could become established in the United States if materials carrying the BSE agent, such as certain meat, animal products, and animal byproducts from ruminants in countries in which BSE exists, are imported into the United States and are fed to ruminants in the United States.

Sections 94.18 and 95.4 of the regulations prohibit and restrict the importation of certain meat, animal products, and animal byproducts from ruminants which have been in countries in which BSE exists. These countries are listed in § 94.18 of the regulations.

Portuguese government veterinarians with the National Veterinary Laboratory in Lisbon reported to the Office of International Epizootics that BSE has been detected in cattle imported into Portugal from Great Britain. Cases of BSE were confirmed by histopathological analysis of microscopic slides according to standardized procedures for the diagnosis of BSE. In order to reduce the risk of introducing BSE into the United States, we are, therefore, adding Portugal to the list of countries where BSE is known to exist. Thus, we are prohibiting or restricting the importation of certain fresh, chilled, and frozen meat, and certain other animal products and animal byproducts from ruminants which have been in Portugal.

Immediate Action

The Administrator of the Animal and Plant Health Inspection Service (APHIS) has determined that there is good cause for publishing this interim rule without prior opportunity for public comment.

BSE is a serious animal disease that has caused great loss to the cattle industry of Great Britain, and the introduction of this disease into the United States would cause great harm to the U.S. cattle industry. BSE has been diagnosed in cattle in Portugal. The restrictions contained in this interim rule must be implemented immediately to reduce the risk that BSE could be introduced into the United States through importation of certain meat, animal products, and animal byproducts from ruminants that have been in Portugal.

Because prior notice and other public procedures with respect to this action are impracticable and contrary to the public interest under these conditions, we find good cause under 5 U.S.C. 553 to make it effective upon signature. We will consider comments that are received within 60 days of publication of this interim rule in the **Federal Register**. After the comment period closes, we will publish another document in the **Federal Register**. It will include discussion of any comments we receive and any amendments we are making to the rule as a result of the comments.

Executive Order 12866 and Regulatory Flexibility Act

We are issuing this rule in conformance with Executive Order 12866. Based on information compiled by the Department, we have determined that this rule: (1) Will have an effect on the economy of less than $100 million; (2) will not adversely affect in a material way the economy, a sector of the economy, productivity, competition, jobs, the environment, public health or safety, or State, local, or tribal governments or communities; (3) will not create a serious inconsistency or otherwise interfere with an action taken or planned by another agency; (4) will not alter the budgetary impact of entitlements, grants, user fees, or loan programs or rights and obligations of recipients thereof; and (5) will not raise novel legal or policy issues arising out of legal mandates, the President's priorities, or principles set forth in Executive Order 12866.

For this action, the Office of Management and Budget has waived its review process required by Executive Order 12866.

As an alternative to the provisions of this rule, we have considered taking no action and enforcing the current import regulations. This alternative was rejected because it would allow meat, animal products, and animal byproducts that might spread BSE to be imported into the United States.

Placing Portugal on the list of countries in which BSE is known to exist restricts the importation of some animal products and prohibits the importation of others. Currently, natural sausage casings are the only affected commodity imported from Portugal in quantities sufficient to cause any economic impact. This rule will prohibit imports of natural sausage casings of ruminant origin from Portugal.

The only businesses affected will be about 20 small U.S. entities that import natural sausage casings from Portugal. None of the companies is totally dependent on Portugal for sausage casings. Further, Portugal only supplies 2.5 percent of natural sausage casings imported into the United States and importers can substitute other sources to supply their total requirement. This rule will have a negligible economic impact on these small entities. Additionally, price and competition in the United States will not be affected.

Under these circumstances, the Administrator of the Animal and Plant Health Inspection Service has determined that this action will not have a significant economic impact on a substantial number of small entities.

Executive Order 12778

This rule has been reviewed under Executive Order 12778, Civil Justice Reform. This rule: (1) Preempts all State and local laws and regulations that are inconsistent with this rule; (2) has no retroactive effect; and (3) does not require administrative proceedings before parties may file suit in court challenging this rule.

Paperwork Reduction Act

This interim rule contains no information collection or recordkeeping requirements under the Paperwork Reduction Act of 1980 (44 U.S.C. 3501 *et seq.*).

List of Subjects in 9 CFR Part 94

Animal diseases, Imports, Livestock, Meat and meat products, Milk, Poultry and poultry products, Reporting and recordkeeping requirements.

Accordingly, 9 CFR part 94 is amended as follows:

PART 94—RINDERPEST, FOOT-AND-MOUTH DISEASE, FOWL PEST (FOWL PLAGUE), VELOGENIC VISCEROTROPIC NEWCASTLE DISEASE, AFRICAN SWINE FEVER, HOG CHOLERA, AND BOVINE SPONGIFORM ENCEPHALOPATHY: PROHIBITED AND RESTRICTED IMPORTATIONS

1. The authority citation for part 94 continues to read as follows:

Authority: 7 U.S.C. 147a, 150ee, 161, 162, and 450; 19 U.S.C. 1306; 21 U.S.C. 111, 114a, 134a, 134b, 134c, and 134f; 31 U.S.C. 9701; 42 U.S.C. 4331, 4332; 7 CFR 2.17, 2.51, and 371.2(d).

2. In § 94.18, paragraph (a) is revised to read as follows:

§ 94.18 Ruminant meat and edible products from ruminants that have been in countries where bovine spongiform encephalopathy exists.

(a) Bovine spongiform encephalopathy exists in the following countries: France, Great Britain, Northern Ireland, the Republic of Ireland, Oman, Portugal, and Switzerland.

* * * * *

Done in Washington, DC, this 7th day of December 1993.

Patricia Jensen,

Assistant Secretary, Marketing and Inspection Services.

[FR Doc. 93–30298 Filed 12–10–93; 8:45 am]

BILLING CODE 3410–34–P

DEPARTMENT OF TRANSPORTATION

Federal Aviation Administration

14 CFR Part 39

[Docket No. 93–CE–56–AD; Amendment 39–8763; AD 93–21–12]

Airworthiness Directives: Piper Aircraft Corporation Models PA25 (PA25–150), PA25–235, and PA25–260 Airplanes

AGENCY: Federal Aviation Administration, DOT.

ACTION: Final rule; request for comments.

SUMMARY: This document publishes in the **Federal Register** an amendment adopting Airworthiness Directive (AD) 93–21–12, which was sent previously to all known U.S. owners and operators of Piper Aircraft Corporation (Piper) Models PA25–150, PA25–235, and PA25–260 airplanes. This AD requires inspecting (one-time) the wing forward spar fuselage attachment assembly for cracks or corrosion, and replacing or repairing any cracked or corroded part.

A recent accident of a Piper Model PA25–235 airplane where the wing forward spar fuselage attachment fittings were cracked and corroded prompted this AD. The actions specified by this AD are intended to prevent possible in-flight separation of the wing from the airplane caused by a cracked or corroded wing forward spar fuselage attachment assembly.

DATES: Effective December 30, 1993, to all persons except those to whom it was made immediately effective by priority letter AD 93–21–12, issued October 26, 1993, which contained the requirements of this amendment.

Comments for inclusion in the Rules Docket must be received on or before February 21, 1994.

ADDRESSES: Submit comments in triplicate to the Federal Aviation Administration (FAA), Central Region, Office of the Assistant Chief Counsel, Attention: Rules Docket 93–CE–56–AD, Room 1558, 601 E. 12th Street, Kansas City, Missouri 64106.

Information that relates to this AD may be examined at the Rules Docket at the address above.

FOR FURTHER INFORMATION CONTACT: Christina Marsh, Aerospace Engineer, FAA, Atlanta Aircraft Certification Office, 1669 Phoenix Parkway, Suite 210C, Atlanta, Georgia 30349; telephone (404) 991–2910; facsimile (404) 991–3606.

SUPPLEMENTARY INFORMATION: On August 31, 1993, the FAA issued a notice of proposed rulemaking (NPRM) (58 FR 47227, September 8, 1993) that would apply to Piper Models PA25–150, PA25–235, and PA25–260 airplanes. That document (Docket No. 92–CE–63–AD) proposes to require repetitively inspecting the wing forward spar fuselage attachment assembly for cracks or corrosion, and replacing or repairing any cracked or corroded part.

Investigation of the affected airplane revealed corrosion and cracks in the wing forward spar fuselage attachment fittings. The forward clevis ear of the left wing forward spar fuselage attach fitting assembly of the referenced airplane fractured at the base of the clevis ear and contained extensive corrosion. Some of the fractures were along flat transverse planes, indicating progressive cracking. A strong oxidation layer between the sections of the fitting assembly indicates that the corrosion occurred over a long period of time. The referenced airplane had over 10,000 hours time-in-service (TIS) accrued at the time of the accident.

The aft clevis ear of the left wing forward spar fuselage attach fitting assembly was extensively deformed and had broken through at the wing attachment bolt hole. The fracture of the forward clevis ear caused severe stress upon the aft clevis ear, which resulted in the left wing separating from the airplane.

A similar accident on a Piper Model PA25–150 airplane prompted the FAA to issue priority letter AD 93–21–12. This AD requires inspecting (one-time) the wing forward spar fuselage attachment assembly for cracks or corrosion on Piper Models PA25–150, PA25–235, and PA25–260 airplanes, and replacing or repairing any cracked or corroded part. The airplane involved in the referenced incident had accrued over 5,000 hours TIS.

Because of the wide variation in hours TIS accrued on the two airplanes involved in the referenced accidents (over 10,000 and over 5,000), the FAA determined that expeditious action was necessary and that an immediate safety of flight situation existed that required bypassing normal rulemaking procedures involving the existing NPRM (Docket No. 92–CE–63–AD).

Since an unsafe condition has been identified that is likely to exist or develop in other Piper Models PA25–150, PA25–235, and PA25–260 airplanes of the same type design, the FAA issued priority letter AD 93–21–12 to prevent possible in-flight separation of the wing from the airplane caused by a cracked or corroded wing forward spar fuselage attachment assembly. The AD requires inspecting (one-time) the wing forward spar fuselage attachment assembly for cracks or corrosion, and replacing or repairing any cracked or corroded part.

The FAA, at a later date, will issue a supplementary NPRM to propose retaining the initial inspection required by this action and adding the repetitive inspection requirement that was proposed in Docket No. 92–CE–63–AD.

The compliance time for this AD is presented in calendar time instead of hours TIS. The FAA has determined that a calendar time for compliance is the most desirable method because the unsafe condition described by the required AD is caused by corrosion. Corrosion can occur on airplanes regardless of whether the airplane is in service or in storage. Therefore, to ensure that corrosion is detected and corrected on all airplanes within a reasonable period of time without inadvertently grounding any airplanes, a compliance schedule based upon calendar time instead of hours TIS is utilized.

Since it was found that immediate corrective action was required, notice and opportunity for prior public comment thereon were impracticable and contrary to the public interest, and good cause existed to make the AD effective immediately by individual letters issued on October 26, 1993, to all known U.S. operators of Piper Models PA25–150, PA25–235, and PA25–260 airplanes. These conditions still exist, and the AD is hereby published in the **Federal Register** as an amendment to Section 39.13 of part 39 of the Federal Aviation Regulations (FAR) to make it effective as to all persons.

Comments Invited

Although this action is in the form of a final rule that involves requirements affecting immediate flight safety and, thus, was not preceded by notice and opportunity to comment, comments are invited on this rule. Interested persons are invited to comment on this rule by submitting such written data, views, or arguments as they may desire. Communications should identify the Rules Docket number and be submitted in triplicate to the address specified above. All communications received on or before the closing date for comments will be considered, and this rule may be amended in light of the comments received. Factual information that supports the commenter's ideas and suggestions is extremely helpful in evaluating the effectiveness of the AD action and determining whether additional rulemaking action would be needed.

Comments are specifically invited on the overall regulatory, economic, environmental, and energy aspects of the rule that might suggest a need to modify the rule. All comments submitted will be available, both before and after the closing date for comments, in the Rules Docket for examination by interested persons. A report that summarizes each FAA-public contact concerned with the substance of this AD will be filed in the Rules Docket.

Commenters wishing the FAA to acknowledge receipt of their comments submitted in response to this notice must submit a self-addressed, stamped postcard on which the following statement is made: "Comments to Docket No. 93–CE–56–AD." The postcard will be date stamped and returned to the commenter.

The regulations adopted herein will not have substantial direct effects on the States, on the relationship between the national government and the States, or on the distribution of power and responsibilities among the various levels of government. Therefore, in accordance with Executive Order 12612, it is determined that this final rule does not have sufficient federalism

implications to warrant the preparation of a Federalism Assessment.

The FAA has determined that this regulation is an emergency regulation that must be issued immediately to correct an unsafe condition in aircraft, and is not a "significant regulatory action" under Executive Order 12866. It has been determined further that this action involves an emergency regulation under DOT Regulatory Policies and Procedures (44 FR 11034, February 26, 1979). If it is determined that this emergency regulation otherwise would be significant under DOT Regulatory Policies and Procedures, a final regulatory evaluation will be prepared and placed in the Rules Docket. A copy of it, if filed, may be obtained from the Rules Docket at the location provided under the caption "ADDRESSES".

List of Subjects in 14 CFR Part 39

Air transportation, Aircraft, Aviation safety, Safety.

Adoption of the Amendment

Accordingly, pursuant to the authority delegated to me by the Administrator, the Federal Aviation Administration amends 14 CFR part 39 of the Federal Aviation Regulations as follows:

PART 39—AIRWORTHINESS DIRECTIVES

1. The authority citation for part 39 continues to read as follows:

Authority: 49 U.S.C. App. 1354(a), 1421 and 1423; 49 U.S.C. 106(g); and 14 CFR 11.89.

§ 39.13 [Amended]

2. Section 39.13 is amended by adding the following new airworthiness directive:

93-21-12 Piper Aircraft Corporation: Amendment 39-8763; Docket No. 93-CE-56-AD.

Applicability: Models PA25 (PA25-150), PA25-235, and PA25-260 airplanes (all serial numbers), certificated in any category.

Compliance: Required within the next 30 calendar days after the effective date of this AD, unless already accomplished.

To prevent possible in-flight separation of the wing from the airplane caused by a cracked or corroded wing forward spar fuselage attachment assembly, accomplish the following:

Note 1: The paragraph structure of this AD is as follows:

Level 1: (a), (b), (c), etc.

Level 2: (1), (2), (3), etc.

Level 2 structures are designations of the Level 1 paragraph they immediately follow.

(a) Gain access to the left and right wing forward spar fuselage attach fittings by removing the screws retaining the wing fairing. On later models, dismantle the wing fillet by removing the screws on the aft edge top and bottom and removing the wing fairing (see FIGURE 1 of this AD).

BILLING CODE 4910-13-M

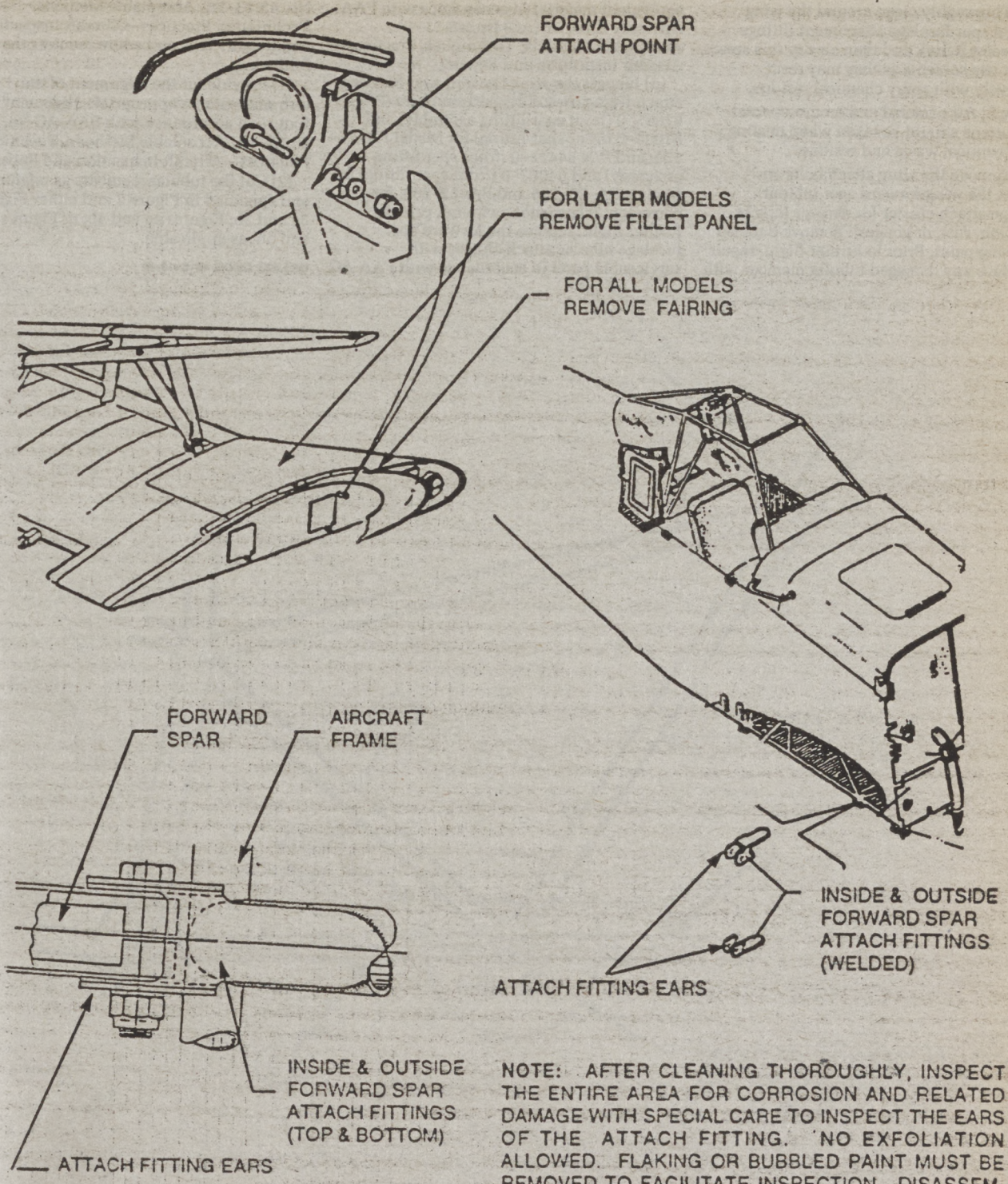

NOTE: AFTER CLEANING THOROUGHLY, INSPECT THE ENTIRE AREA FOR CORROSION AND RELATED DAMAGE WITH SPECIAL CARE TO INSPECT THE EARS OF THE ATTACH FITTING. NO EXFOLIATION ALLOWED. FLAKING OR BUBBLED PAINT MUST BE REMOVED TO FACILITATE INSPECTION. DISASSEMBLY WILL BE AS REQUIRED BASED ON CONDITION. RETURN TO SERVICE INCLUDES PRIME, PAINT AND RUST INHIBITOR.

Figure 1

BILLING CODE 4910-13-C

(b) Thoroughly clean around the wing forward spar fuselage attachment fittings with water (only), and then air dry this area. Do not use solvents as they may react negatively with spray chemical residue.

Note 2: All personal and environmental precautions should be taken when dealing with chemical waste and residue.

(c) Remove the wing attach bolts and inspect the wing forward spar tubular fuselage attach cluster for damage (cracks, corrosion, rust, or gouges). Remove bubbled or flaking paint. Prior to further flight, repair or replace any damaged tubular member with equivalent material in accordance with FAA Advisory Circular (AC) No. 43.13–1A, Acceptable Methods, Techniques, Practices—Aircraft Inspection and Repair.

(d) Inspect the wing forward spar fuselage attach fitting assembly, part numbers (P/N) 61005–0 (front spar fitting assembly) and 61006–0 (front spar fitting) for Model PA–25–150; and P/N 64412–0 (front spar fitting assembly) and 64003–0 (front spar fitting) for Models PA–25–235 and PA–25–260, for corrosion. If corrosion is found, prior to further flight, replace the forward spar fuselage tubular attach cluster with serviceable parts in accordance with FAA AC No. 43.13–1A, Acceptable Methods, Techniques, Practices—Aircraft Inspection and Repair. This procedure requires the following:

(1) Provide for the alignment of the airframe with an appropriate alignment fixture in accordance with FAA AC No. 43.13–1A, Acceptable Methods, Techniques, Practices—Aircraft Inspection and Repair.

(2) Cut the tubular members as referenced and specified in Figure 2 and either Figures 3a and 3b; Figures 4a and 4b; or Figures 5a and 5b, as applicable.

BILLING CODE 4910–13–M

PA-25
Side View of the Front Wing Fitting
and Landing Gear Fittings

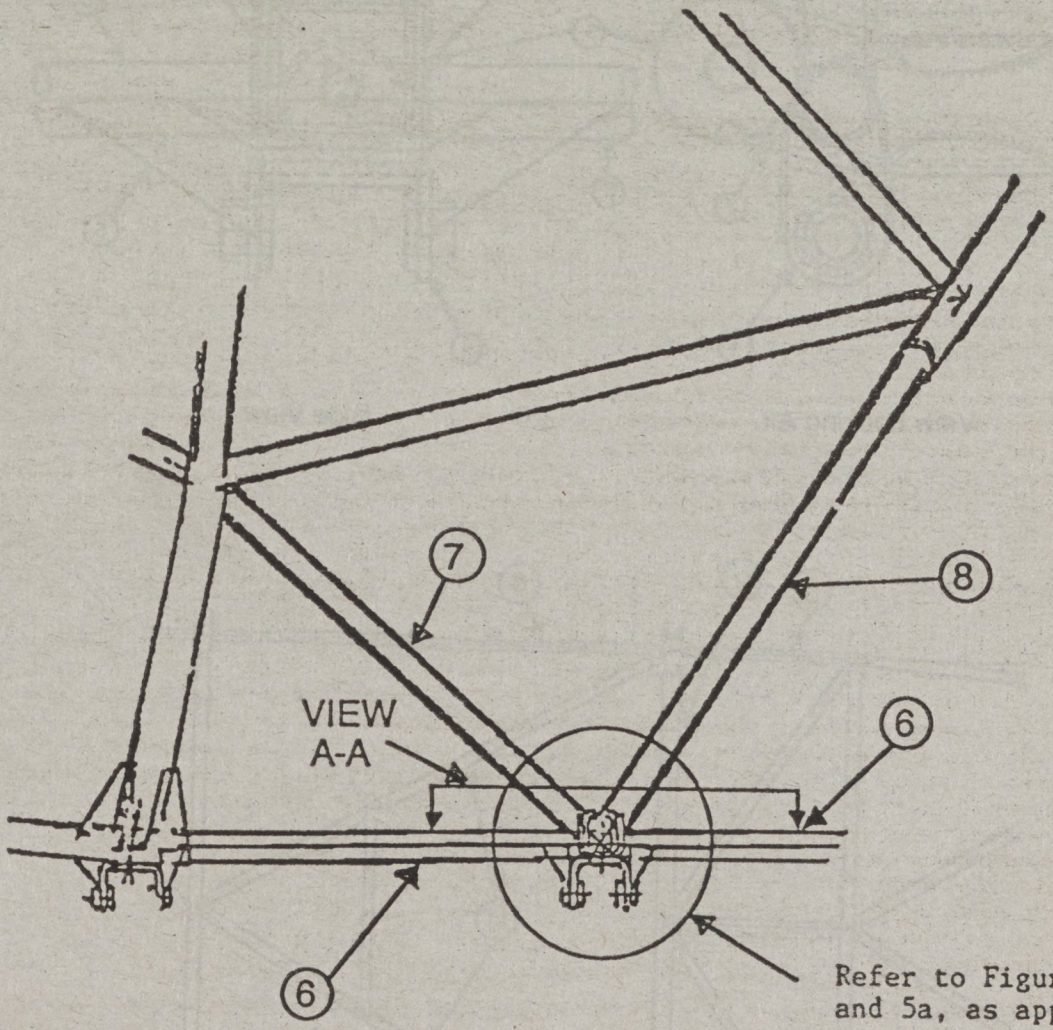

Figure 2

PA-25-150
S/N - ALL

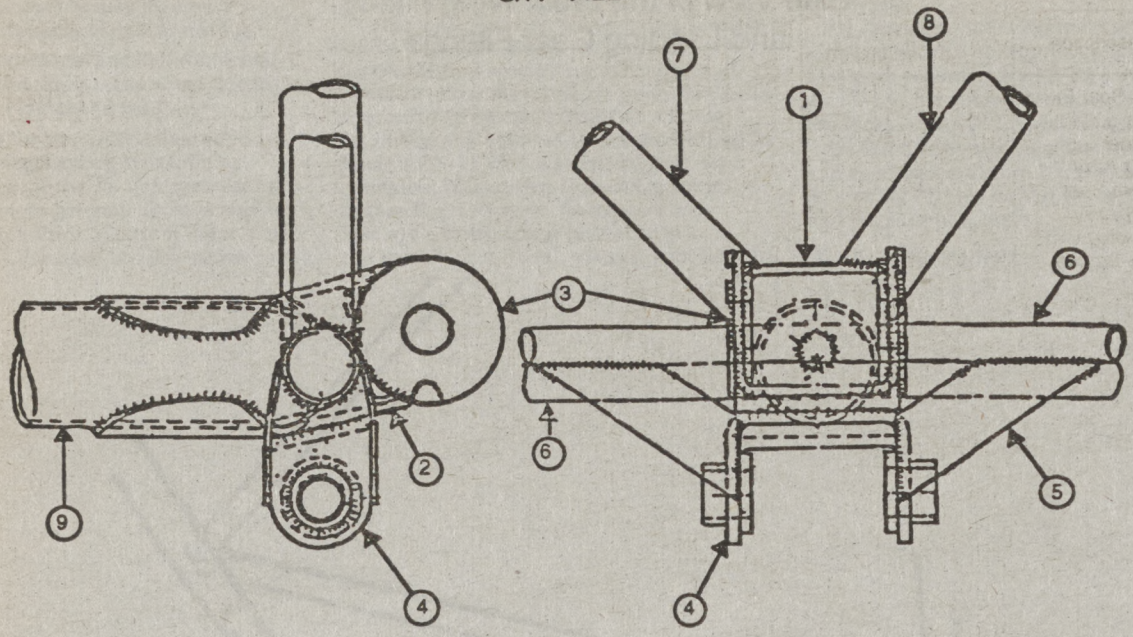

View Looking Aft

Side View

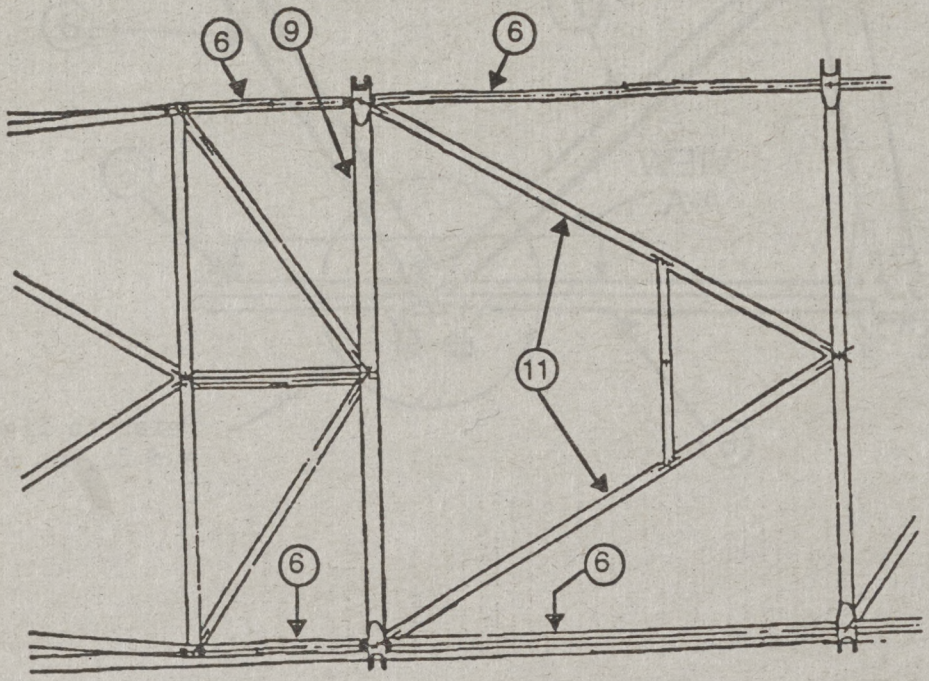

Bottom View (View A-A)
(Both Sides)

Figure 3a

BILLING CODE 4910-13-C

PA–25–150, S/N–ALL, Front Wing Spar Attachment Fittings and Tubes

[Figure 3b]

No.	Description	Part No. /Tube Dimensions
1	Front Spar Fitting	61006–0.
2	Channel	61007–0.
3	Fitting Assy-Front Spar	61005–0.
4	Fitting Assy-Landing Gear	21242–2.
5	Brace-Bracket	11994–28.

PA–25–150, S/N–ALL, Front Wing Spar Attachment Fittings and Tubes—Continued

[Figure 3b]

No.	Description	Part No. /Tube Dimensions
6	Tube	.75×.035 (4130) N.**
7	Tube	.625×.035 (4130) N.**
8	Tube	.75×.035 (4130) N.**

PA–25–150, S/N–ALL, Front Wing Spar Attachment Fittings and Tubes—Continued

[Figure 3b]

No.	Description	Part No. /Tube Dimensions
9	Tube	1.25×.058 (4130) N.**
11	Tube	.625×.028 (1025).

**MIL–T–6736 Type 1.

BILLING CODE 4910–13–M

PA-25-235
(S/N - 25-2000 To 25-2985)

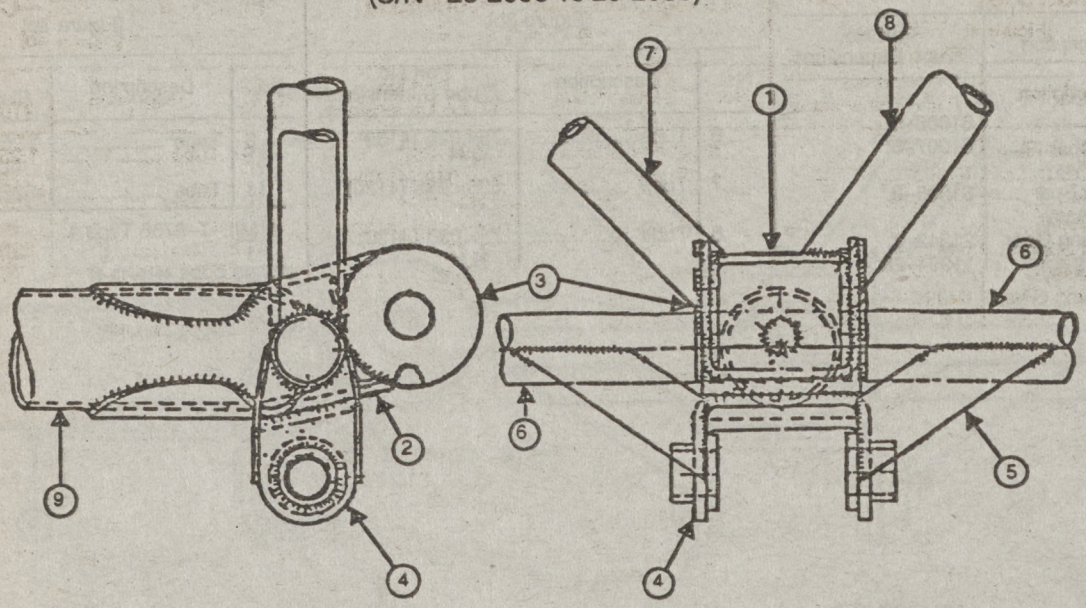

View Looking Aft

Side View

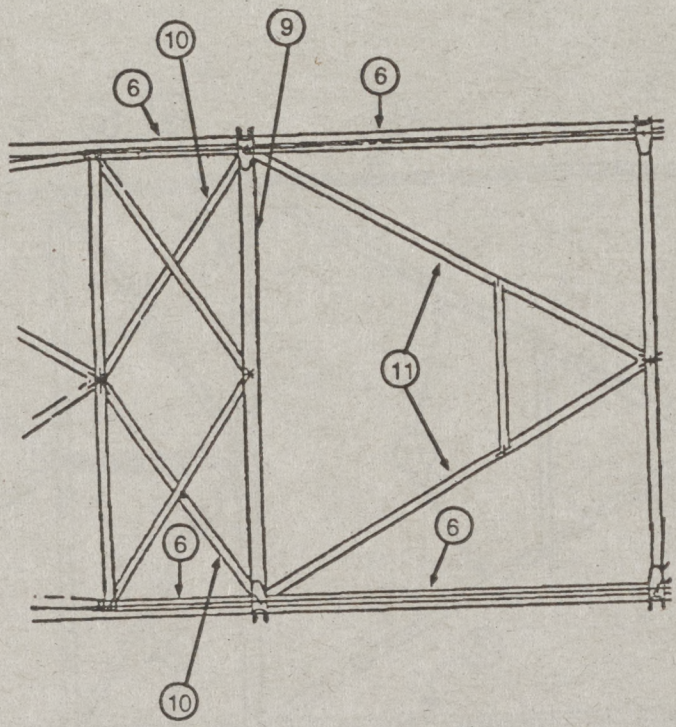

Bottom View (View A-A)
(Both Sides)

Figure 4a

BILLING CODE 4910–13–C

PA–25–235, S/N–25–2000 to 25–2985, Front Wing Spar Attachment Fittings and Tubes

[Figure 4b]

No.	Description	Part No. /Tube Dimensions
1	Front Spar Fitting	64003–0.
2	Channel	64175–0.
3	Fitting Assy-Front Spar	64412–0.
4	Fitting Assy-Landing Gear	64005–0 (L), 64005–1 (R).

PA–25–235, S/N–25–2000 to 25–2985, Front Wing Spar Attachment Fittings and Tubes—Continued

[Figure 4b]

No.	Description	Part No. /Tube Dimensions
5	Brace-Bracket	11994–28.
6	Tube	.75×.049 (4130) N.**
7	Tube	.625×.049 (4130) N.**
8	Tube	.875×.065 (4130) N.**

PA–25–235, S/N–25–2000 to 25–2985, Front Wing Spar Attachment Fittings and Tubes—Continued

[Figure 4b]

No.	Description	Part No. /Tube Dimensions
9	Tube	1.25×.095 (4130) N.**
10	Tube	.75×.049 (4130) N.**
11	Tube	.625×.028 (1025).

**MIL–T–6736 Type 1.

BILLING CODE 4910–13–M

PA-25-235, PA-25-260
S/N - 25-2986 and Up

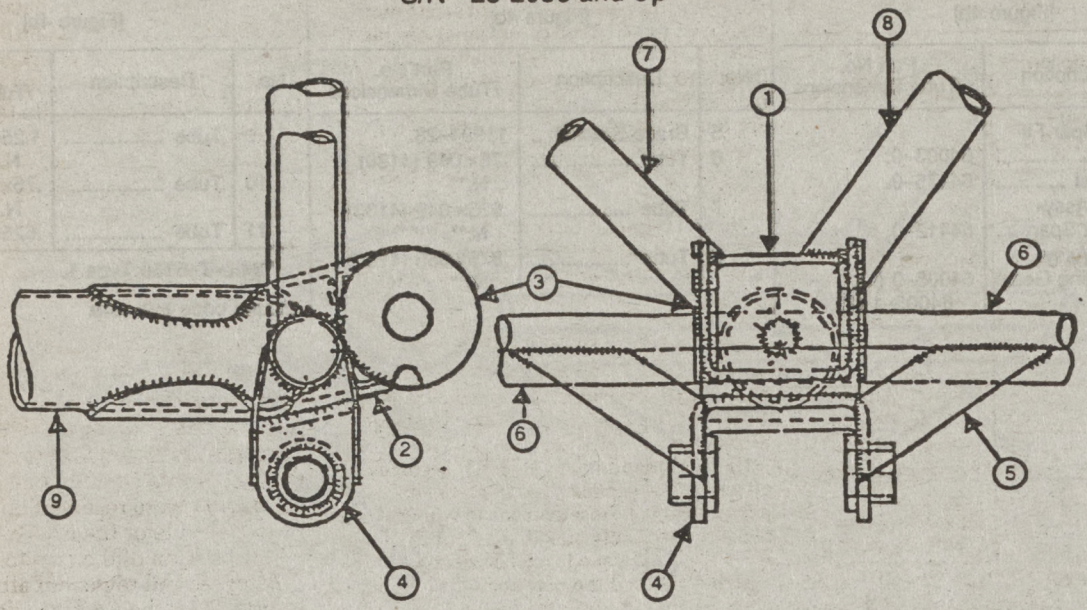

View Looking Aft

Side View

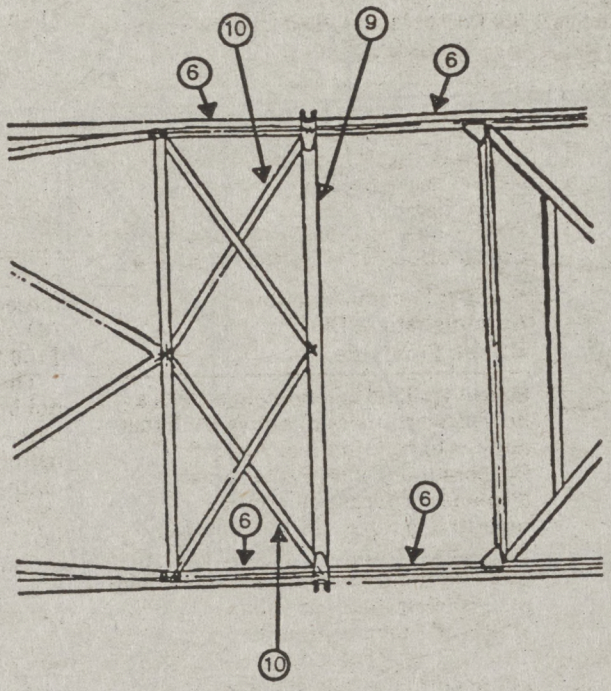

Bottom View (View A-A)
(Both Sides)

Figure 5a

BILLING CODE 4910–13–C

PA–25–235,–260, S/N—25–2986 and Up, Front Wing Spar Attachment Fittings and Tubes

[Figure 5b]

No.	Description	Part No./Tube Dimensions
1	Front Spar Fitting	64003–0.
2	Channel	64175–0.
3	Fitting Assy-Front Spar	64412–0.
4	Fitting Assy-Landing Gear	64005–0 (L), 64005–1 (R).
5	Brace-Bracket	11994–28.
6	Tube	.75×.049 (4130) N.**
7	Tube	.625×.049 (4130) N.**
8	Tube	.875×.065 (4130) N.**
9	Tube	1.25×0.95 (4130) N.**
10	Tube	.75×.049 (4130) N.**

**MIL–T–6736 Type 1.

(3) Fabricate a cluster using all applicable part numbers referenced in Figures 3b, 4b, or 5b, as applicable; and

(4) Splice the new cluster into the fuselage frame.

Note 3: The inner and outer fitting areas are very susceptible to corrosion and extreme care should be given in inspecting these areas.

(e) Inspect the wing forward spar fuselage attach fitting assembly for cracks using FAA-approved dye penetrant methods. If any cracks are found, prior to further flight, replace the forward spar fuselage tubular attach cluster with serviceable parts in accordance with FAA AC No. 43.13–1A, Acceptable Methods, Techniques, Practices—Aircraft Inspection and Repair. This procedure requires the following:

(1) Provide for the alignment of the airframe with an appropriate alignment fixture in accordance with FAA AC No. 43.13–1A, Acceptable Methods, Techniques, Practices—Aircraft Inspection and Repair.

(2) Cut the tubular members as referenced in Figure 2 and either Figures 3a and 3b; Figures 4a and 4b; or Figures 5a and 5b, as applicable.

(3) Fabricate a cluster using all applicable part numbers referenced in Figures 3b, 4b, or 5b, as applicable; and

(4) Splice the new cluster into the fuselage frame.

(f) Replacement parts required by this AD shall be of those referenced and specified in either Figures 3a and 3b, 4a and 4b, or 5a and 5b, as applicable.

(g) Prime and paint all areas where parts were replaced or where paint is bubbled or gone. Use epoxy paint and primer, and, after paint has cured, rust inhibit the entire area.

(h) Reinstall all items that were removed.

(i) Special flight permits may be issued in accordance with FAR 21.197 and 21.199 to operate the airplane to a location where the requirements of this AD can be accomplished.

(j) An alternative method of compliance or adjustment of the compliance time that provides an equivalent level of safety may be approved by the Manager, Atlanta Aircraft Certification Office, 1669 Phoenix Parkway, Suite 210C, Atlanta, Georgia 30349. The request shall be forwarded through an appropriate FAA Maintenance Inspector, who may add comments and then send it to the Manager, Atlanta Aircraft Certification Office.

Note 4: Information concerning the existence of approved alternative methods of compliance with this AD, if any, may be obtained from the Atlanta Aircraft Certification Office.

(k) Information that relates to this AD may be inspected at the FAA, Central Region, Office of the Assistant Chief Counsel, Room 1558, 601 E. 12th Street, Kansas City, Missouri.

(l) This amendment (39–8763) becomes effective on December 30, 1993, to all persons except those persons to whom it was made immediately effective by priority letter AD 93–21–12, issued October 26, 1993, which contained the requirements of this amendment.

Issued in Kansas City, Missouri, on December 6, 1993.

Barry D. Clements,

Manager, Small Airplane Directorate, Aircraft Certification Service.

[FR Doc. 93–30313 Filed 12–10–93; 8:45 am]

BILLING CODE 4910–13–U

14 CFR Part 39

[Docket No. 93–CE–17–AD; Amendment 39–8762; AD 93–24–14]

Airworthiness Directives: Piper Aircraft Corporation PA34 Series Airplanes

AGENCY: Federal Aviation Administration, DOT.

ACTION: Final rule.

SUMMARY: This amendment adopts a new airworthiness directive (AD) that applies to certain Piper Aircraft Corporation (Piper) PA34 series airplanes. This action requires repetitively replacing the bolt that connects the upper drag link to the nose gear trunnion. Several incidents where the nose landing gear collapsed on the affected airplanes prompted this action. The actions specified by this AD are intended to prevent the nose landing gear from collapsing because of failure of this bolt, which could lead to airplane damage.

EFFECTIVE DATE: January 28, 1994.

ADDRESSES: Service information that relates to this AD may be examined at the Federal Aviation Administration (FAA), Central Region, Office of the Assistant Chief Counsel, room 1558, 601 E. 12th Street, Kansas City, Missouri 64106.

FOR FURTHER INFORMATION CONTACT: Christina Marsh, Aerospace Engineer, FAA, Atlanta Aircraft Certification Office, 1669 Phoenix Parkway, suite 210C, Atlanta, Georgia 30349; telephone (404) 991–2910; facsimile (404) 991–3606.

SUPPLEMENTARY INFORMATION: A proposal to amend part 39 of the Federal Aviation Regulations to include an AD that would apply to certain Piper PA34 series airplanes was published in the **Federal Register** on August 11, 1993. The action proposed to require repetitively replacing the bolt that connects the upper drag link to the nose gear trunnion.

Interested persons have been afforded an opportunity to participate in the making of this amendment. No comments were received on the proposed rule or the FAA's determination of the cost to the public.

After careful review of all available information, the FAA has determined that air safety and the public interest require the adoption of the rule as proposed except for minor editorial corrections. The FAA has determined that these minor corrections will not change the meaning of the AD nor add any additional burden upon the public than was already proposed.

The FAA estimates that 1,893 airplanes in the U.S. registry will be affected by this AD, that it will take approximately 1 workhour per airplane to accomplish the required action, and that the average labor rate is approximately $55 an hour. Parts cost approximately $3 per airplane. Based on these figures, the total cost impact of the AD on U.S. operators is estimated to be $109,974.

The regulations adopted herein will not have substantial direct effects on the States, on the relationship between the national government and the States, or on the distribution of power and responsibilities among the various levels of government. Therefore, in accordance with Executive Order 12612, it is determined that this final rule does not have sufficient federalism implications to warrant the preparation of a Federalism Assessment.

For the reasons discussed above, I certify that this action (1) is not a "significant regulatory action" under Executive Order 12886; (2) is not a "significant rule" under DOT Regulatory Policies and Procedures (44 FR 11034, February 26, 1979); and (3) will not have a significant economic impact, positive or negative, on a substantial number of small entities

under the criteria of the Regulatory Flexibility Act. A copy of the final evaluation prepared for this action is contained in the Rules Docket. A copy of it may be obtained by contacting the Rules Docket at the location provided under the caption "ADDRESSES".

List of Subjects in 14 CFR Part 39

Air transportation, Aircraft, Aviation safety, Safety.

Adoption of the Amendment

Accordingly, pursuant to the authority delegated to me by the Administrator, the Federal Aviation Administration amends 14 CFR part 39 of the Federal Aviation Regulations as follows:

PART 39—AIRWORTHINESS DIRECTIVES

1. The authority citation for part 39 continues to read as follows:

Authority: 49 U.S.C. App. 1354(a), 1421 and 1423; 49 U.S.C. 106(g); and 14 CFR 11.89.

§ 39.13 [Amended]

2. Section 39.13 is amended by adding the following new AD:

93-24-14 Piper Aircraft Corporation: Amendment 39-8762; Docket No. 93-CE-17-AD.

Applicability: PA34 Series airplanes (all models and serial numbers), certificated in any category.

Compliance: Required within the next 100 hours time-in-service (TIS) after the effective date of this AD, unless already accomplished within the last 400 hours TIS prior to the effective date of this AD, and thereafter at intervals not to exceed 500 hours TIS.

To prevent the nose landing gear from collapsing because of failure of the bolt that connects the upper drag link to the nose gear trunnion, which could lead to airplane damage, accomplish the following:

(a) Replace the bolt and stack up that connects the upper drag link to the nose gear trunnion with new parts of the following in accordance with Figure 1 of this AD:

(1) Piper part number (P/N) 400 274 (AN7-35) bolt.

(2) Piper P/N 407 591 (AN960-716L) washer, as applicable.

(3) Piper P/N 407 568 (AN960-716) washer, as applicable.

(4) Piper P/N 404 396 (AN320-7) nut; and

(5) Piper P/N 424 085 cotter pin.

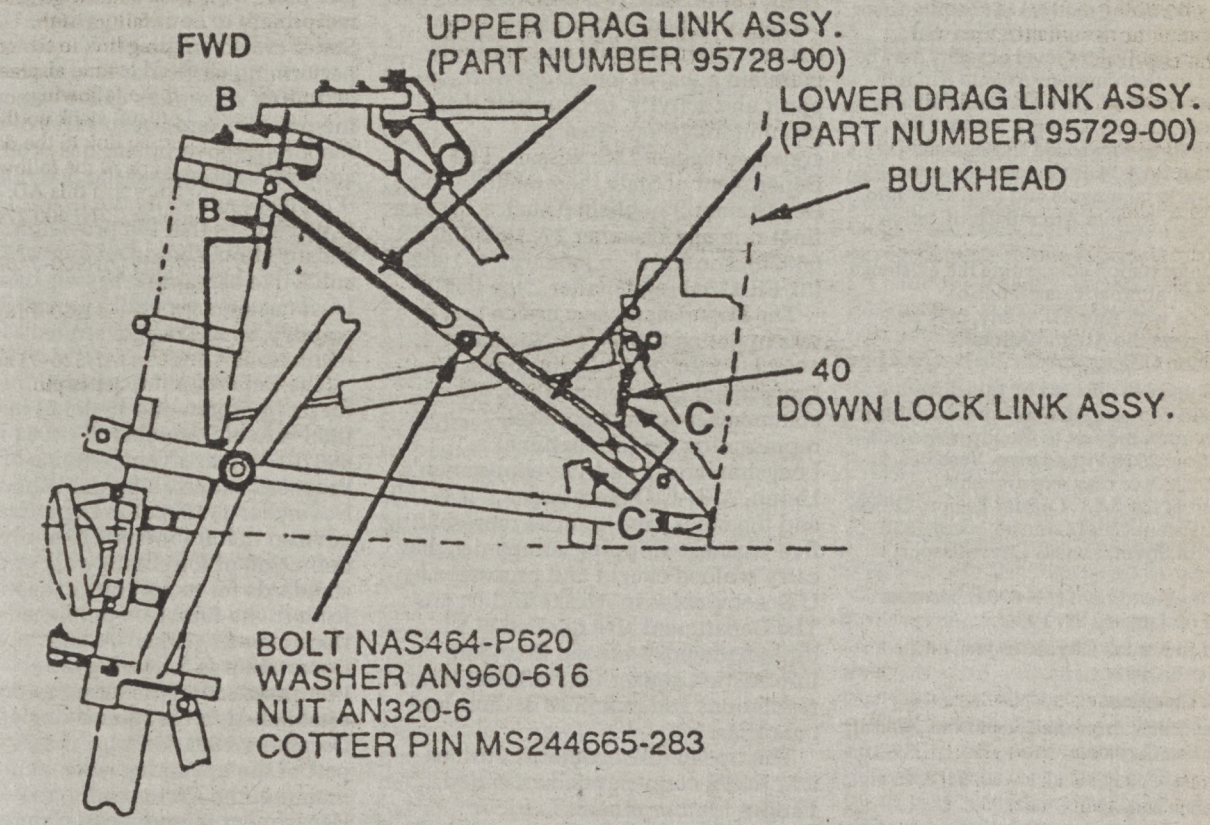

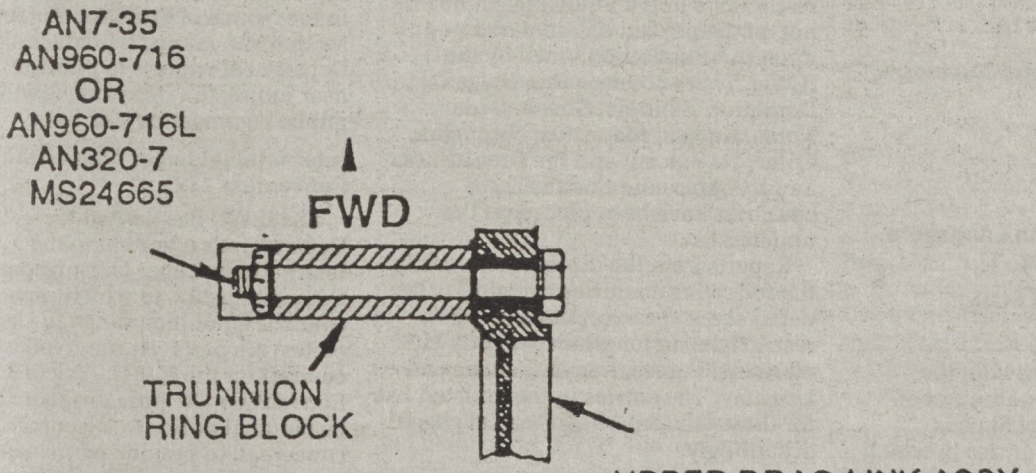

SECTION B-B

"UPPER" DRAG LINK - TO - GEAR CONNECTION

Figure 1

(b) Special flight permits may be issued in accordance with FAR 21.197 and 21.199 to operate the airplane to a location where the requirements of this AD can be accomplished.

(c) An alternative method of compliance or adjustment of the compliance time that provides an equivalent level of safety may be approved by the Manager, Atlanta Aircraft Certification Office, 1669 Phoenix Parkway, Suite 210C, Atlanta, Georgia 30349. The request shall be forwarded through an appropriate FAA Maintenance Inspector, who may add comments and then send it to the Manager, Atlanta Aircraft Certification Office.

Note: Information concerning the existence of approved alternative methods of compliance with this AD, if any, may be obtained from the Atlanta Aircraft Certification Office.

(d) All persons affected by this directive may obtain copies of the document referred to herein upon request to the Piper Aircraft Corporation, 2926 Piper Drive, Vero Beach, Florida 32960; or may examine this document at the FAA, Central Region, Office of the Assistant Chief Counsel, room 1558, 601 E. 12th Street, Kansas City, Missouri 64106.

(e) This amendment (39–8762) becomes effective on January 28, 1994.

Issued in Kansas City, Missouri, on December 6, 1993.

Barry D. Clements,

Manager, Small Airplane Directorate, Aircraft Certification Service.

[FR Doc. 93–30312 Filed 12–10–93; 8:45 am]

BILLING CODE 4910–13–U

DEPARTMENT OF STATE

Bureau of Economic and Business Affairs

[Public Notice 1915]

22 CFR Part 89

Foreign Prohibitions on Longshore Work by U.S. Nationals

AGENCY: Department of State.

ACTION: Final rule.

SUMMARY: In accordance with the Immigration and Nationality Act of 1952, the Department of State is updating the list of countries in which longshore work by crewmembers aboard U.S. vessels is prohibited with regard to particular activities.

DATES: Effective date: December 13, 1993.

ADDRESSES: Office of Maritime and Land Transport (EB/TRA/MA), room 5828, Department of State, Washington, DC 20520–5816.

FOR FURTHER INFORMATION CONTACT: Stephen M. Miller, Office of Maritime and Land Transport, Department of State, (202) 647–6961.

SUPPLEMENTARY INFORMATION: Section 258(d) of the Immigration and Nationality Act of 1952, 8 U.S.C. 1288, as added by the Immigration Act of 1990, Public Law 101–649, requires the Secretary of State (hereinafter, "the Secretary") to compile and annually maintain a list, of longshore work by particular activity, of countries that prohibit longshore work by crewmembers of U.S. vessels. The Department of State (hereinafter, "the Department") published such a list as a final rule on December 27, 1991 (56 FR 66970), corrected on January 14, 1992 (57 FR 1384) (hereinafter, "the list").

The Department gave notice that it was updating the list on November 4, 1992 (57 FR 52600). In response, the Department received two sets of comments, one from counsel representing the International Longshoremen's and Warehousemen's Union, AFL–CIO (hereinafter, "ILWU"), and the other from counsel representing five Japanese shipping companies that carry seafood caught and processed by U.S. companies in Alaska and Japan. The Department also queried U.S. diplomatic posts abroad to update information concerning relevant laws, regulations and practices of their host countries.

The updated list contains thirteen additional countries and amended listings for four others.

U.S. diplomatic posts have identified restrictions in the following countries not on the present list, in part based upon information provided by the ILWU. Those countries are Bulgaria, Dominica, Ethiopia, Ghana, Jordan, Korea, Kuwait, Mauritius, Nicaragua, Qatar, St. Vincent and the Grenadines, Saudi Arabia, and Sudan. These countries have been placed on the updated list.

Reports from the diplomatic posts in the following countries contain further detail about the exceptions to the restrictions on longshore work by U.S. mariners: France, Kenya, Tunisia and Uruguay. The entries in the updated list for those countries have been changed accordingly.

ILWU Comments

Standards for Reciprocity

The ILWU reiterates its disagreement with the Department's interpretation of the reciprocity exception. The ILWU submits that the Department's interpretation of the term "in practice" misconstrues the purpose and scope of the reciprocity exception. The Union believes that the reciprocal exception in section 258(d) was only intended for vessels registered in and owned by nationals of countries where crewmen aboard U.S. vessels may perform longshore activities. In the opinion of the ILWU, the use of the term "in practice" was intended to bar reciprocity to countries where "United States crewmen are prevented from performing particular longshore activities, *regardless* of the reason for the practice, and irrespective of whether the foreign government has prompted, adopted or approved the practice." (Emphasis added by the ILWU.) The ILWU argues that the provision, by its construction, should encompass private collective bargaining agreements and local customs generally prevailing in the country, as well as government laws and regulations.

The Department explained the basis for its interpretation in detail in the final rule of December 27, 1991 (56 FR 66970). In its Advance Notice of Proposed Rulemaking published on November 4, 1992, the Department advised that it "intends to apply the definition of longshore work and the standards for reciprocity exception set forth in the final rule published on December 27, 1991." Accordingly, the Department is following the interpretation of the term "in practice" established in the rulemaking of December 1991 for this Final Rule. As part of the upcoming rulemaking to maintain the list annually, the Department intends to reexamine standards for the reciprocity exception. In the Notice of Proposed Rulemaking for that annual update, which the Department expects to publish in the near future, the Department will seek public comment on this issue.

International Labor Organization Convention 137

The ILWU has invited the Department's attention to the International Labor Organization (ILO) Convention 137, to which some 21 countries (not including the United States) are party. As observed by counsel for the ILWU, Article 2 of Convention 137 provides that "It shall be national policy to encourage all concerned to provide permanent or regular employment for dockworkers insofar as practicable." The ILWU submits that this clause requires contracting parties to preserve existing work for local longshore workers, so that being party to the Convention is itself sufficient cause for including a country on the list. In the Department's view, nothing in Convention 137, in fact, requires contracting parties to restrict longshore work by the crews of foreign vessels in order to satisfy the very general obligations of the

Convention. It is a party's actions in implementing the Convention, rather than the Convention itself, that are relevant to determining whether the restrictions of Section 258(d) of the Act apply in respect of that country. The Department therefore examined the situation in each of the contracting parties to determine whether the crews of U.S. ships may perform these activities.

Status of Individual Countries

In its comments, counsel for the ILWU implies that practices in the following countries preclude U.S. crewmen from performing longshore work, without providing any further information: Canada, Denmark, Ecuador, Ethiopia, Liberia, New Zealand, and Panama.

Canada: On the basis of investigations by the U.S. Embassy in Ottawa and consular posts in Montreal, Toronto, and Vancouver, the Department concluded that the Canadian Government does not impose or approve restrictions on longshore work by U.S. mariners. In comments submitted to the Department's Notice of Proposed Rulemaking of February 27, 1991, U.S.-flag carriers reported that Canadian laws, regulations and practices do not prohibit their crews from performing longshore work. In the absence of specific information to the contrary, Canada will not be placed on the updated list.

Denmark: The U.S. Embassy in Copenhagen reported that the Danish Government does not have any laws, regulations or practices prohibiting longshore work by U.S. mariners. At the Department's request, the Embassy confirmed this finding after the Department received additional reports from interested members of the public alleging restrictions in Denmark. In the absence of specific information to the contrary, Denmark will not be placed on the updated list.

Ecuador: Longshore activities are governed by collective bargaining agreements between the National Association of Shipping Agents (ASONAVE) and the Federation of Maritime and Port Workers (FEMAPOR). Neither organization is government affiliated and the Ecuadorian Government does not require or approve of nationality restrictions. In the absence of specific information to the contrary, Ecuador will not be placed on the updated list.

Ethiopia: Reports received from the U.S. Embassy in Addis Ababa indicate that Ethiopian law and regulation prohibit U.S. Mariners from performing longshore work. Ethiopia is being placed on the updated list.

Liberia: The Department did not include Liberia on the initial list because no U.S. ships had called in Liberian ports during the previous year and consequently had not been subject to any restrictions on longshore work. In its 1992 update, the U.S. Embassy in Monrovia reports that the ports are controlled by competing political administrations and that there is not any law, regulation or government practice restricting crews of U.S. vessels from performing any type of longshore activity normally performed in the country. Liberia is therefore not being placed on the updated list.

New Zealand: Collective bargaining agreements with the two waterside unions do not permit any crewmembers to perform longshore work. These restrictions, however, are not approved or imposed by the New Zealand Government. In the absence of specific information to the contrary, New Zealand is not being placed on the updated list.

Panama: After extensive discussions with the Panamanian Bureau of Maritime and Consular Affairs and the Panamanian Port Authority, the U.S. Embassy in Panama advises that there are no rules, regulations, or practices that prohibit U.S. mariners from performing longshore work in Panama. In the absence of specific information to the contrary, Panama is not being placed on the updated list.

In its comments, counsel for the ILWU also refers to reports filed in 1991 by U.S. diplomatic posts about restrictive laws or regulations in the following countries, which were not included in the initial list: Bulgaria, Cyprus, Ghana, Mexico, Nicaragua, Norway, Saudi Arabia and Sudan. After reviewing those reports and updated information from U.S. diplomatic missions and the comments of counsel for the ILWU, the Department has placed Bulgaria, Ghana, Nicaragua, Saudi Arabia and Sudan on the updated list.

As noted by the comments submitted on behalf of the ILWU, the early reports from the U.S. Embassy left some doubt about Mexico's status. Accordingly, the Department contacted U.S. carriers engaged in the trade with Mexico. These carriers report that the Mexican Government does not have any rules, regulations or practices that prohibit their crews from doing longshore work. Mexico is not being placed on the updated list.

In regard to Cyprus and Norway, counsel for the ILWU contests the Department's conclusion that rules and regulations prohibiting longshore work by foreign mariners should not disqualify these countries for reciprocal exceptions because their governments do not apply these restrictions in practice. The ILWU compares this situation to the Department's treatment of private practices restricting the longshore work of U.S. mariners. The Department remains of the opinion that a country should not be denied a reciprocal exception if it does not in fact prohibit U.S. mariners from performing longshore work, notwithstanding laws or regulations to the contrary.

Counsel for ILWU further questions the reciprocal exceptions for Bangladesh, Barbados, Finland, Haiti and Ireland because "government agencies" in those countries are parties to collective bargaining agreements which prohibit U.S. mariners from doing longshore work. The government agencies in question are port authorities. The Department, in consultation with U.S. diplomatic missions, examined the degree of control exercised by each of the countries' central governments over their respective port authorities, including, for example, whether the port authority had a distinct corporate entity. The Department has determined that the port authorities in these countries operate independently from the central government in these matters and that the central governments do not require collective bargaining agreements to contain such restrictions or require submission of the agreements for their approval. Consequently, these countries have not been placed on the updated list.

Finally, the ILWU forwarded a report from the Korean Federation of Port and Transport Workers' Union that the Korean Port Transportation Law only allows companies holding a license from the Chief of Port Administration to perform longshore work. The Department confirmed this report through the U.S. Embassy in Seoul and is consequently placing Korea on the updated list.

Japanese Carriers: Status of Japan

Counsel representing five Japanese shipping companies that carry seafood caught and processed by U.S. companies in Alaska to Japan ("the Carriers") have requested deletion of Japan from the list or alternatively, that the Department find that Japanese law, regulation, and practice do not prohibit crews of U.S. vessels in small Japanese ports from performing longshore activities aboard their own vessels under conditions that correspond to those in small, remote Alaskan ports.

The Carriers report that their crews have traditionally carried out longshore work because their loading operations occur offshore from Alaska or in remote parts of the state where U.S. longshore labor is unavailable. According to the Carriers, the addition of Japan to the list forced them to make use of the prevailing practice exception under section 258(c) of the Act in order to avoid disruption of their export services for U.S. processors. The Carriers underscore the cost and unpredictability in filing the required attestations.

The Carriers note that the Department's finding on Japan is based on the Japanese Port Transportation Business Law of May 29, 1951, Law No. 161 (hereinafter "the Port Law"). The Carriers believe that the Port Law merely establishes a requirement for a license to engage in port transport business or related business in a covered port. They submit that the Port Law does not impose any nationality requirement on applicants and is neutral regarding the country of registry or ownership of vessels.

The Carriers maintain that the Port Law does not constitute general practice prevailing throughout Japan. They state that the law applies to 96 specifically designated ports and is silent on longshore activities in other Japanese ports or outside designated boundaries of the 96 affected ports. The Carriers cite Japanese laws which they believe demonstrate that foreign ships may call on a large number of ports not covered by the Port Law. They point to cases where foreign crewmen have carried out longshore activities in Japanese ports, and refer to cases where foreign crews have engaged in unloading activities in ports covered by the Port Law, with the prior consent of licensed Japanese stevedoring companies.

In the event that the Department concludes that Japanese vessels are not entitled to the reciprocity exception, the Carriers propose modifying the listing for Japan to create an exception for small ports. The Carriers relate comments from the Japanese Ministry of Transport that the Port Law is intended to maintain fair competition and to protect smaller stevedoring companies. The Carriers report that the Japanese Ministry of Transport, in designating ports covered by the Port Law, takes into account the volume of cargo, number of stevedoring companies and other factors. According to the Carriers, local governments, industry groups or businesses propose particular ports for designation. The real presence of port transportation companies is a condition for designation by the Ministry of Transport. Drawing a parallel to the situation in Alaska, the Carriers observe that there are few ports in the state with regular stevedoring services. Consequently, they recommend revising the listing to provide an exception for ports "where bona fide contract stevedoring companies do not provide the services of sufficient numbers of qualified U.S. longshore workers."

The information supplied by the Carriers does not, in the Department's opinion, establish a case that U.S. mariners may perform longshore activities in Japan. As observed in the final rule of December 1991, the conference report establishes "general practice" as a test for reciprocity exception. The Department is listing countries where restrictions on U.S. mariners generally prevail throughout the country. The Port Law as presently applied in Japan meets this condition. The 96 designated ports which account for a vast majority of the cargoes shipped into and out of Japan are not confined to a particular region of the country. Though the Port Law does not apply beyond the boundaries of designated ports, this exception does not have any practical effect on allowing U.S. mariners to perform any longshore work in Japan. With respect to the Carriers' proposed "small ports" exception, in the Department's view such an exception, even if technically supportable, would be inconsistent with the "general practice" criteria applied to other nations' practices.

The Department understands that foreign crewmembers may unload cargoes of live fish, with the prior approval of licensed Japanese stevedores, or transfer cargoes between ships outside of the limits of ports designated for the purposes of the Port Law. The Department notes that the prevailing practice exception in section 258(c) of the Act offers foreign crewmembers a similar opportunity to carry out longshore activities with the approval of U.S. longshore workers. The merits of the attestation process for obtaining a prevailing practice exception fall outside of the scope of this rule.

List of Subjects in 22 CFR Part 89

Aliens, Crewmembers, Immigration, Labor, Longshore work.

For the reasons set out in the preamble, 22 CFR chapter I is amended as follows.

PART 89—PROHIBITIONS ON LONGSHORE WORK BY U.S. NATIONALS

1. The authority for part 89 is revised to read as follows:

Authority: 8 U.S.C. 1288, Public Law 101-649, 104 Stat. 4878.

2. Part 89 is amended by revising § 89.1 to read as follows:

§ 89.1 Prohibitions on Longshore work by U.S. nationals; listing by country.

The Secretary of State has determined that, in the following countries, longshore work by crewmembers aboard United States vessels is prohibited by law, regulation, or in practice, with respect to the particular activities noted:

Algeria

(a) All longshore activities.

Argentina

(a) Loading and discharge of cargo.

Australia

(a) Handling of cargo or ballast in connection with the loading or discharge of a ship, including rigging of ship's gear, unless there is insufficient shore labor.

(b) Exceptions: Operation of self discharging equipment and other automatic loading/unloading mechanisms.

Belgium

(a) Cargo loading and discharge.

(b) Exception: operation of cargo-related machinery on board the ship.

Belize

(a) Loading and unloading cargo vessels and handling of containers.

(b) Exception: operation of shipboard cranes.

Brazil

(a) Movement of cargo.

(b) Lashing of unlashing of containers.

(c) Operation of cargo related equipment, whether or not on board the ship.

(d) Activities performed by cargo checkers, tally clerks, watchmen, and coopers.

Bulgaria

(a) All longshore activities.

Burma

(a) Loading and discharge of cargo from and in any sea-going vessels coming to any dock, wharf, quay, stage, jetty or pier.

(b) Handling of mooring lines.

(c) Exceptions: Shipboard activities including opening hatches and rigging ship's gear; loading or discharge of cargo when the equipment or cargoes special handling; and loading or discharge of other cargoes, by special agreement with port authorities.

Chile

(a) Any and all functions relating to the loading and unloading of cargo and other tasks appropriate to a port, whether on board boats and ships in the port or in the dock area, including the operation of cargo-related equipment, whether or not integral to the vessel, including hatches and rigging of ship's gear.

(b) Exceptions: (1) Placement and removal of mooring ropes from dock bitts and operation of the capstans abroad the vessels,

when under the control of the harbor pilot; and

(2) Doing a vessel's mess and purveying alongside the ship with the provisions, loading and placement of the provisions in the ship's larder or stores.

China, Peoples Republic of

(a) All longshore activities.

Colombia

(a) All activities related to the loading and discharge of cargo, including operation of cargo-related equipment integral to the vessel.

Congo

(a) All longshore activities.

Costa Rica

(a) Operation of loading and unloading equipment affixed to the pier.

Cote d'Ivoire

(a) All longshore activities.

Dominica

(a) All longshore activities.

Egypt

(a) Cargo loading and unloading activities not on board the ship.

El Salvador

(a) Port operations, including the loading and discharge of cargo, the operation of equipment, whether on the ship or not, and the handling of lines.

Ethiopia

(a) All longshore activities.

France

(a) All loading and unloading of ocean-going ships.

(b) Exceptions:

(1) Movement of personal belongings and machinery belonging to the ship.

(2) Loading or discharge of ship's own supplies or provisions by the ship's equipment,

(3) Operations associated with shipbuilding and repair, and

(4) Offloading fish.

Germany

(a) All longshore activities on shore without a labor permit.

Ghana

(a) All longshore activities.

(b) Exceptions, with permission in writing from the port authority:

(1) Cargo requiring specialized handling which the Port and Harbor Authority cannot perform, and

(2) Cargo handling with the vessel's crew and equipment, if turnaround time is lessened.

Guatemala

(a) All port operations except for the opening of hatches and entrances to ship storage areas.

Guinea

(a) All longshore activities.

Honduras

(a) All longshore activities, including loading and discharge of cargo, handling of containers, operation of cranes, hoisting machinery and roll-on/roll-off equipment.

(b) Exception: handling of toxic or hazardous materials, with clearances obtained through the national port authority prior to entry into port.

India

(a) All on-board activities relating to loading and discharge of cargo and operation of cargo-related equipment, including rigging of derricks, and opening and closing of hatches.

(b) All movement of cargo on shore.

(c) Berthing vessels and handling of mooring lines on dock when the vessel is made fast or let go.

Indonesia

(a) All longshore activities, including opening of hatches, rigging of ship's gear and line handling, as long as there are Indonesian longshoremen available.

(b) Exceptions: activities for which local workers lack the requisite skills; in an emergency situation, duties ordinarily performed by longshoremen; and loading and discharge of hazardous chemicals at industrial ports if no Indonesian workers are available for the job.

Israel

(a) All longshore activities, including loading and unloading of cargo, operation of cargo-related equipment, and handling of mooring lines.

(b) Exception: jobs related to the maintenance of the ship itself.

Italy

(a) All longshore activities, including operation of onboard equipment and the loading and discharge of new automobiles.

(b) Exceptions: (1) Operation of automated loading and discharge equipment on board the vessel and associated manual activities, including loading and discharging containers from container vessels manually or with automatic or semi-automatic spreaders,

(2) Operation and movement of fixed or mobile mechanical equipment owned or leased by port companies and used for operations,

(3) Ancillary activities connected with documenting goods,

(4) Restoration of packaging,

(5) All activities, including moving goods, carried out within areas operated under a concession granted by the port authority,

(6) Activities strictly connected with the operation and security of navigation, or otherwise within the competence of the crew,

(7) Handling of the lifts on ferries,

(8) Preparation of onboard derricks, winches and cranes,

(9) Opening and closing of hatches,

(10) Loading and discharge operations related to barges from LASH vessels,

(11) Installation of bulkheads to secure cargo,

(12) Lashing and unlashing operations, and

(13) Securing of cargo.

Jamaica

(a) Activities normally carried out by stevedores, linesmen, gangmen or longshoremen, including:

(1) All on-shore activities dealing with the handling and placement of cargo;

(2) All movement of cargo from or onto ships whether by gangplank or crane;

(3) All stacking and slinging of pallets within the ship's cargo holds;

(4) Mooring and unmooring of ships, including handling of mooring lines aboard ships; and

(5) Any other activity involving the discharge of cargo into Jamaica.

(b) All activities associated with the discharge of grain and loading of grain products, with the exception of handling of on-board machinery to keep the ship righted.

(c) Exception: Direction of supervisors by the ship's officers only insofar as necessary to identify which cargo is to be palletized, shifted, or off-loaded.

Japan

(a) All longshore activities.

Jordan

(a) All longshore activities.

Kenya

(a) All longshore activities.

(b) Exceptions: (1) Emergencies declared by the Port Authority, and

(2) Transfer of cargo between ships.

Korea

(a) All longshore activities.

Kuwait

(a) All longshore activities.

Madagascar

(a) All longshore activities.

Mauritania

(a) All longshore activities.

(b) Exception: Supervision by the vessel's master or loadmaster.

Mauritius

(a) All longshore activities.

Morocco

(a) Handling of any product, crates, boxes, bales or containers destined for unloading.

(b) Exception: Any shipboard activities not relating to loading or discharge operations and not having any commercial character, including opening hatches, rigging of ship's gear and line handling.

Mozambique

(a) All longshore activities.

Namibia

(a) Port services and cargo loading and discharge.

(b) Exception: Handling of cargo only while it remains on the vessel.

Nicaragua

(a) All longshore activities.

Oman

(a) Longshore work without a labor permit, including loading or discharge of cargo, handling of containers or any other activity

not related to a crewman's job on the ship or to basic ship repair.

(b) Exceptions: Opening of hatches, rigging of the ship's gear and handling of lines aboard ship.

Pakistan

(a) All longshore activities.

(b) Exceptions: Shipboard activities other than opening of hatches; with prior approval from Ministry of Communications officials, loading or discharge of special cargoes with on-board equipment in cases where dockside equipment operated by longshoremen cannot safely move the cargoes.

Philippines

(a) All longshore activities.

Portugal

(a) All operations associated with loading or unloading cargo and complementary operations within the port area, including lashing.

(b) Exceptions: (1) Opening and closing of hatches;

(2) Rigging of ship's gear;

(3) Handling of lines;

(4) Military vessels or the operation of military material in areas under military jurisdiction;

(5) The supply of bulk operating fuels and lubricating oils to a ship;

(6) The movement of spare parts, supplies, ship's stores, fuels and lubricants when the quantities to be moved are less than three tons per vessel;

(7) The loading, unloading and transfer of fuels and bulk liquid petroleum products;

(8) The loading, unloading and transfer of chemical products whose characteristics require special handling;

(9) The loading, unloading and packing of fresh, refrigerated or frozen fish from a fishing vessel, except when such cargo is listed on manifest; and

(10) the movement of goods and materials within naval construction and repair yards or petroleum terminals.

Quatar

(a) All longshore activities.

Romania

(a) All longshore activities not on board the ship.

St. Lucia

(a) All longshore activities.

St. Vincent and the Grenadines

(a) All longshore activities.

Saudi Arabia

(a) All longshore activities.

Sierra Leone

(a) All longshore activities on shore.

South Africa

(a) Cargo handling without a license issued by the port authority.

Spain

(a) Longshore operations, including any loading, offloading, stowage and transfer of goods within port intended for maritime transport by ship.

(b) Exceptions include: (1) Handling of goods, material, and machinery belonging to the port authorities;

(2) Material of the Ministry of Defense unless operations are carried out by a stowage company;

(3) Mail loading and offloading;

(4) Private vehicles offloaded by owners or drivers and complementary grip tasks carried out by ship's crew;

(5) Offloading, transport to storage and complementary work of fresh fish from ships of less than 100 gross tons capacity or those above this size under special contract when carried out by the crew;

(6) Operations carried out within the port directly related to processing plants, industrial zones or canning factories, as long as they are not carried out by a stowage company;

(7) Handling of personal belongings of passengers and crewmembers;

(8) Loading and offloading of maintenance goods as long as it does not require hiring additional personnel or operations carried out by pipelines;

(9) The use of cranes and tractor devices not assigned to port operations as long as they are used by their regular personnel; and

(10) Driving, coupling and coupling tractor devices to load and unload trailers as long as transport is carried out without interruption from outside of the port area until their loading, or from the ship to the outside of the port area.

Sri Lanka

(a) All longshore activities.

(b) Exceptions: With a waiver granted by the Minister of Ports and Shipping upon application through the ports authority, handling of long lines of ships awaiting unloading and other activities under exceptional circumstances.

Sudan

(a) All longshore activities.

Taiwan

(a) Loading and discharge activities, including opening of hatches and rigging of ship's gear.

(b) Handling of mooring lines on the dock for all vessels.

(c) Exceptions: landing and discharge of cargo if the longshoremen cannot handle the cranes of a particular ship; and operation of automatic hatch opening equipment that longshoremen are unable to operate.

Thailand

(a) All longshore activities, including opening of hatches, rigging ship's gear and line handling once the ship has berthed.

(b) Exception: operation of onboard cargo machinery integral to the ship.

Togo

(a) Handling of mooring lines on the dock.

Trinidad and Tobago

(a) All longshore activities, including loading and discharge of cargo; lashing and unlashing of containers; operation of cargo-related equipment, unless the required skill is unavailable at port; and activities normally performed by cargo checkers, tally clerks and watchmen.

Tunisia

(a) All longshore or dock activities on public facilities, including the operation of on-board hoists.

(b) Exception: operation of onboard equipment which local dock workers do not know how to operate.

Turkey

(a) Work done on the pier, including mooring, cargo handling, crane operations and ground vehicle transportation.

(b) Exceptions: activities on board vessels to assist in loading and discharge of cargo.

Uruguay

(a) Stowing, unstowing, loading, unloading and related activities on board ships alongside docks, wharfs, outer harbors and bays of commercial ports.

(b) All activities involving handling of package cargo on their docks and piers directly related to the activities listed in section (a),

(c) Exceptions: (1) Fuels and other bulk liquid products,

(2) Provisions and supplies for ships when provided by the Port Authority or suppliers of such specific provisions,

(3) Operations with explosives carried out in the bay,

(4) Operations, which due to their handling method, automation or mechanization characteristics do not require the use of port workers,

(5) Activities usually performed by the ship's crew,

(6) Activities carried out within port warehouses,

(7) Operation of machinery on board or on shore which belong to the National Port Administration or to any third party,

(8) Stowing and unstowing on board ships of refrigerated and frozen uncontainerized meat products,

(9) Loading and discharge of mail,

(10) Lashing and unlashing of goods and containers,

(11) Loading and unloading of live animals when using a ramp or similar,

(12) Cleaning or preparing of holds, tanks and bilges, and

(13) Force majeure.

Yemen

(a) All longshore activities.

(8 U.S.C. 1288, Pub. L. 010–649, 104 Stat. 4878)

November 10, 1993.

Daniel K. Tarullo,

Assistant Secretary, Economic and Business Affairs, Department of State.

[FR Doc. 93–30252 Filed 12–10–93; 8:45 am]

BILLING CODE 4710–07–M

DEPARTMENT OF THE TREASURY

Bureau of Alcohol, Tobacco and Firearms

27 CFR Part 9

[T.D. ATF-351; Re: Notice No. 777, T.D. ATF-295, 92F-080P]

RIN AA07

Realignment of the Northern Boundary of the Mt. Veeder Viticultural Area

AGENCY: Bureau of Alcohol, Tobacco and Firearms (ATF), Treasury.

ACTION: Final rule, Treasury decision.

SUMMARY: This final rule revises the northern boundary of the Mt. Veeder viticultural area to include vineyard land that is similar to land in the current Mt. Veeder viticultural area which was established on February 20, 1990, by the issuance of Treasury Decision ATF-295 [55 FR 5842]. The boundary revision adds approximately 360 acres, of which 30 acres are being planted to vineyards. The addition to the Mt. Veeder viticultural area is located northwest of the city of Napa in Napa County, on the eastern slope of the Mayacamas Mountains, adjacent to the current northern boundary of the viticultural area.

EFFECTIVE DATE: January 12, 1994.

FOR FURTHER INFORMATION CONTACT: David W. Brokaw, Wine and Beer Branch, Bureau of Alcohol, Tobacco and Firearms, 650 Massachusetts Ave., NW., Washington, DC 20226 (202) 927-8230.

SUPPLEMENTARY INFORMATION:

Background

On October 2, 1979, ATF published Treasury Decision ATF-60 [44 FR 56692] which added a new part 9 to 27 CFR, providing for the listing of approved American viticultural areas, the names of which may be used as appellations of origin. Section 4.25a(e)(l), title 27, CFR, defines an American viticultural area as a delimited grape-growing region distinguishable by geographic features, the boundaries of which have been delineated in subpart C of part 9.

Section 4.25a(e)(2), title 27, CFR, outlines the procedure for proposing an American viticultural area. Any interested person may petition ATF to establish a grape-growing region as a viticultural area. The petition should include:

(a) Evidence that the name of the proposed viticultural area is locally and/or nationally known as referring to the area specified in the petition;

(b) Historical or current evidence that the boundaries of the viticultural area are as specified in the petition;

(c) Evidence relating to the geographical characteristics (climate, soil, elevation, physical features, etc.) which distinguish the viticultural features of the proposed area from surrounding areas;

(d) A description of the specific boundaries of the viticultural area, based on features which can be found on United States Geological Survey (U.S.G.S.) maps of the largest applicable scale, and;

(e) A copy (or copies) of the appropriate U.S.G.S. map(s) with the proposed boundaries prominently marked.

Petition

ATF received a petition from Mr. Robin Williams for a revision of the northern boundary of the Mt. Veeder viticultural area to include vineyard land that was not included when the viticultural area was established by Treasury Decision ATF-295 on February 20, 1990.

The petitioner stated that the vineyards located in the extension area were planted after the viticultural area was established, and he believes the omission of this area was an oversight. As evidence, the petitioner presented documentation supporting the boundary revision from the original petitioner for the Mt. Veeder viticultural area, the present Chairperson of the Mt. Veeder Appellation Council, and the same experts in soil and climate who reviewed the original petition.

The addition to the Mt. Veeder viticultural area is located in Napa County, California, on the eastern slope of the Mayacamas Mountains that separate Napa Valley and Sonoma Valley. Situated contiguous to the northernmost boundary of the current viticultural area, the addition contains approximately 360 acres, of which 30 acres are being planted to vineyards, a project that began in 1990.

As far as can be ascertained, no vineyards are situated or planned north of the proposed boundary on the eastern slope of the Mayacamas Mountains for a distance of four miles, and the likelihood of new vineyards immediately north of the new boundary is remote, due to the extreme ruggedness of terrain, the difficulty of access, and a lack of appropriate soils.

Notice of Proposed Rulemaking

In response to the petition, ATF published Notice No. 777 in the **Federal Register** on August 19, 1993 [58 FR 44152], proposing to revise the northern boundary of the Mt. Veeder viticultural area to include vineyard land that is similar to land in the current Mt. Veeder viticultural area which was established on February 20, 1990, by the issuance of Treasury Decision ATF-295. This notice requested comments from all interested persons. Written comments were to be received on or before October 4, 1993. No comments were received in response to Notice No. 777.

Evidence That the Name of the Area Is Locally or Nationally Known

The derivation of the name "Mt. Veeder," as well as evidence of the region's local and national renown, were detailed in the Mt. Veeder viticultural area petition submitted to the Bureau of Alcohol, Tobacco and Firearms in January of 1988, and summarized in the Treasury decision for the Mt. Veeder viticultural area, published in the **Federal Register** on February 20, 1990.

A statement from long-time resident Duane Wall indicates that Wall Road in its entirety (including the northern portion that extends into the addition) is recognized as being part of Mt. Veeder by those who live there and the statement indicates that such recognition existed as early as the 1920's.

An article which appeared in The Napa Daily Register of March 26, 1880, tends to support Mr. Wall's statement. The article states, "At the distance of ten or eleven miles an elevated point is reached where the views of mountain masses and ridges near at hand, and of Napa Valley with the bay and Mt. Diablo in the distance, are most charming. The wooded plateau of Howell Mountain to the northeast of Napa Valley and the great mass of Mt. Veeder with its rocky and partially wooded crest and summit and its finely varied slopes descending eastward down to Dry Creek, will particularly attract the eye."

Additional name evidence submitted by the petitioner shows that the Mt. Veeder area does not extend beyond Dry Creek. The LaJoya quicksilver mine (originally called the Summit mine), which operated sporadically from 1865 to 1942, is located approximately 6/10 mile north of Dry Creek, yet has never been associated with the Mount Veeder region in print.

An article published in the California Journal of Mines and Geology of January, 1949, entitled, "Quicksilver Deposits of the Oakville District, Napa County, California," clearly identifies this mine with Mount St. John, not Mt. Veeder. The article states that, "The old 1,000 by 2,400-foot Summit claim was

located March 27, 1865 by M. S. Whitton, C. I. Whitton, R. I. Whitton, I. M. Whitton, W.T. Whitton, W.H. Whitton, and F.I. (?) Corning of Yountville, apparently on the summit of the mountain ridge that extends northwest from Mount St. John." Moreover, the earthquake fault that runs east/west along the southern slope of Mount St. John north of the proposed boundary is known as the Mount St. John's Fault. The use of Mount St. John as both a landmark and the name source for features immediately north of the proposed Dry Creek boundary indicates that the Mt. Veeder viticultural area does not extend north of Dry Creek.

Historical or Current Evidence That the Boundaries of the Viticultural Area Are as Specified in the Petition

Primary access to the addition is from the Mt. Veeder viticultural area by way of Wall Road. The statement from Mr. Duane Wall shows that the northern terminus of Wall Road, which the revised boundary incorporates into the Mt. Veeder viticultural area, is served by two local organizations that encompass virtually all of Mt. Veeder: The Dry Creek—Lokoya Fire District, and the Hill and Dale Club (a local social club). That these two local organizations should independently include the full length of Wall Road in their activities and memberships indicates that the addition is within the area known as Mt. Veeder.

The expansion of the Mt. Veeder viticultural area is supported by vintners and growers currently within the viticultural area. The petition contains a letter from Mr. Donald Hess and Mr. Clement Firko of The Hess Collection, the winery that led the effort to establish the Mt. Veeder viticultural area in 1988, and Ms. Ariel Rubissow, chairperson of the Mt. Veeder Appellation Council. These letters reflect the general support that this proposed boundary revision has received from within the Mt. Veeder viticultural community.

Evidence Relating to the Geographical Features (Climate, Soil, Elevation, Physical Features, etc.) Which Distinguish Viticultural Features of the Proposed Area From Surrounding Areas

The addition to the Mt. Veeder viticultural area contains the same geographical features that distinguish the viticultural area as currently established. The geographical elements of soil, climate, elevation and exposure found in the addition to the Mt. Veeder viticultural area are detailed and compared to those in the current viticultural area in two reports submitted with the petition and discussed below. Both reports were prepared by the same experts who studied and reported on Mt. Veeder in the initial rulemaking. As such, the experts are already familiar with the geographic features of the present viticultural area and have the best possible background to compare and contrast the addition.

The soil report on the addition to the Mt. Veeder viticultural area was prepared by Eugene L. Begg. Mr. Begg has been a member of the California Soil Survey Committee since 1974 and has reviewed new and revised soil series descriptions for the National Cooperative Soil Survey since 1970. Mr. Begg's writings on soil and vegetation have been widely published. He has served as an expert consultant on a variety of soil matters in both regulatory hearings and legal cases.

The climatic overview of the viticultural area addition was prepared by Michael Pechner. Since 1968, Mr. Pechner has headed Golden West Meteorology of Fairfield, California. In that capacity, he has served as staff meteorologist for KCBS Radio in San Francisco, weather consultant for KTW Television in Oakland, and consulting meteorologist for Associated Press in San Francisco.

Soils

The northern extension boundary is a line of demarcation between different soil compositions and of aspect (*i.e.*, direction of the slope) and slope. A review of the supplementary information in T.D. ATF–295, indicates that the soil discussion basically focused on two points. First, it focused on the differences between the soils of the Napa Valley and the Mt. Veeder viticultural area. Second, it discussed in detail the soil differences between the northeast slope towards Napa County and the southwestern slope towards Sonoma County. None of the soil discussion in the supplementary information directly applied to the northern boundary. The background information supporting the original petition does state:

> The soils of the proposed viticultural area are much different from the deep, alluvial soils of Napa Valley proper and the Los Carneros region and are equally differentiated from the soils in Sonoma Valley and to the north by geology and composition.

(Page 18 of original petition.)

However, as noted, this reference to the "north" was not carried over into the supplementary information. Additionally, this reference to the north was included in the "Conclusion" portion of the original petition and the more lengthy soil portion of the original petition does not clearly draw this distinction (pages 11–14 of original petition). Thus, the following soil evidence for the proposed addition is not in direct conflict with the substantive soil information in the original petition or the description in the supplementary information in T.D. ATF–295.

The soils in the addition are residual upland soils from Pliocene volcanic rocks (andesite and rhyolite) and Cretaceous sedimentary rocks (sandstone and shales). All the soils in the addition are mapped in the Mt. Veeder viticultural area. These soils are: Boomer-Forward-Felta complexes, from andesite and rhyolite; Hambright-Rock Outcrop, from basic volcanic rocks; and Bressa-Dibble complexes and Maymen-Los Gatos complexes, from sandstone and shales. The Boomer-Forward-Felta and Maymen-Los Gatos extend from the original viticultural area into the addition.

Because the soils in the addition are also mapped in the Mt. Veeder viticultural area, locations appropriate to grapes have the soils with the same moderate depth to bedrock (30 to 60 inches) and the same limited available water holding capacity (four to ten inches) as those in the current viticultural area.

In the area beyond the boundary of the addition to the north and northeast, a greater degree of dissection and downcutting has entirely removed the volcanic capping of andesites and rhyolites to expose a large area of serpentine and older sandstone and shales of the Franciscan formation. The soils formed from serpentine are Henneke, while those from sandstone and shales are Bressa, Dibble, Felton, Lodo, Los Gatos, Maymem and Millsholm. The soils from sedimentary rocks are also mapped in the Mt. Veeder viticultural area and the addition, but in these areas, they are formed from younger sandstone and shales of the Cretaceous formation. With the exception of one small pocket of Henneke soils located near its southwestern boundary, no serpentine soils are mapped in the current Mt. Veeder viticultural area.

Aspect and Slope

In addition to geologic differences, the current Mt. Veeder viticultural area and the addition contrast sharply from land to the north and northeast in matters of aspect and slope. The aspect of the Mt. Veeder viticultural area proper and the addition is generally east-to-

northeasterly, far different from the generally southerly aspect of the land beyond the revised boundary. The slopes to the north of the revised boundary are also significantly steeper (30 percent to more than 70 percent) than those found in the current Mt. Veeder viticultural area or its addition, a difference which increases the speed of runoff and associated erosion. The differences in aspect and slope in the land north of the revised boundary are reflected in soils that are shallower and drier, with very different associated vegetation.

Climate

The addition's upland location on the eastern slope of the Mayacamas Mountains and range of elevations within the addition area are consistent with the current Mt. Veeder viticultural area. Both areas share the same characteristic cool, moist winters and warm, dry summers. Due to the similarity in location and relief, both areas also experience the same natural temperature inversion where the minimum temperature is higher than that on the floor of the Napa Valley during the summer and winter. This inversion keeps the addition, as well as the currently approved Mt. Veeder viticultural area, relatively frost free during the spring, when grape vines emerge from dormancy.

The location and elevation also give the addition the same rainfall profile as the current Mt. Veeder viticultural area. In describing the climate of the current Mt. Veeder viticultural area, T.D. ATF–295 states, "The region receives more rainfall than the land east, south and north of it due to the terrain forcing the moist air masses of winter storms upward as they move inland along a southeasterly path from the coast, causing condensation." This is the only climatic statement expressly concerning the northern boundary. A review of the background material in the rulemaking file on T.D. ATF–295, suggests that this comment is a very general comment about the rainfall in the Mt. Veeder viticultural area and was not intended to mean that the proposed northern boundary was a specific demarcation point for a change in the rainfall pattern (pages 15–17 of original petition).

The amount of rainfall throughout the current Mt. Veeder viticultural area varies significantly (that is, 25–65 inches of winter rainfall), so rainfall was not a major distinguishing factor in drawing the original boundaries of the area. Based on isohetal maps of Napa Valley, rainfall in the addition averages roughly 40 inches per year, well within the range of average annual rainfall found within the current Mt. Veeder viticultural area. Thus, the boundary extension does not conflict with the previous climate data.

The predominantly eastern and northeastern exposures within the addition are similar to those in the current Mt. Veeder viticultural area. Such exposures enable the addition area to support the same mixed hardwood (oak, madrone, and laurels) and conifer (douglas fir and redwood) forest found in the current Mt. Veeder viticultural area at similar elevations.

In sharp contrast to the land in the addition, the region immediately north of the revised boundary, on the slopes Mount St. John and the ridge extending northeast from Mount St. John to the main crest of the Mayacamas Mountains, has primarily southern exposures. The microclimate created by this southern exposure, distinguished by warmer temperatures and lower humidities than those found in the current Mt. Veeder viticultural area or the addition, has resulted in quite different vegetation, dominated by brush and digger pine.

Summary of Geographic Features

In summary, the residual upland soils in the addition are the same sedimentary and volcanic types found in the current Mt. Veeder viticultural area. The soils are characterized by their moderate depth to bedrock and limited water holding capacity. The soils in the current viticultural area and the addition are differentiated from soils found to the north of the proposed boundary by geology, composition, depth and vegetation.

The climate in the addition is consistent with that in the current Mt. Veeder viticultural area, with the same cool, moist winters and warm, dry summers. Due to the similarity of location and relief, the addition experiences the same natural inversion as the current viticultural area, which keeps both relatively frost free during the spring, when grape vines emerge from dormancy and set their crop. The average annual rainfall in the addition is likewise within the range found in the current Mt. Veeder viticultural area.

The current Mt. Veeder viticultural area and the addition both have predominantly eastern and northeastern exposures, which support a mixed hardwood and conifer forest. In contrast, the land to the north of the addition has a predominantly southern exposure, with a microclimate of warm temperatures and low humidities that is reflected in very different vegetation, primarily brush and digger pine.

Miscellaneous

ATF does not wish to give the impression by approving the northern extension to the Mt. Veeder viticultural area that it is approving or indorsing the quality of the wine from this area. ATF is approving this area as being distinct from surrounding areas, not better than other areas. By approving this area, ATF will allow wine producers to claim a distinction on labels and advertisements as to origin of the grapes. Any commercial advantage gained can only come from consumer acceptance of Mt. Veeder wines.

Regulatory Flexibility Act

It is hereby certified that this document will not have a significant economic impact on a substantial number of small entities. Any benefit derived by a small proprietor from the new options provided in this rule will be the result of the proprietor's own promotional efforts and consumer acceptance of the specific product. No new reporting, recordkeeping or other administrative requirements are imposed by this rule. Accordingly, a regulatory flexibility analysis is not required.

Executive Order 12866

It has been determined that this rule is not a significant regulatory action, because: (1) It will not have an annual effect on the economy of $100 million or more, or adversely affect in a material way the economy, a sector of the economy, productivity, competition, jobs, the environment, public health or safety, or State, local or tribal governments or communities; (2) Create a serious inconsistency or otherwise interfere with an action taken or planned by another agency; (3) Materially alter the budgetary impact of entitlements, grants, or user fees, or loan programs or the rights and obligations of recipients thereof; or (4) Raise novel legal or policy issues arising out of legal mandates, the President's priorities, or the principles set forth in Executive Order 12866.

Paperwork Reduction Act

The provisions of the Paperwork Reduction Act of 1980, Public Law 96–511, 44 U.S.C. Chapter 35, and its implementing regulations, 5 CFR Part 1320, do not apply to this final rule because no requirement to collect information is imposed.

Drafting Information

The principal author of this document is David W. Brokaw, Wine and Beer Branch, Bureau of Alcohol, Tobacco and Firearms.

List Of Subjects In 27 CFR Part 9

Administrative practice and procedure, Consumer protection, Viticultural areas, Wine.

Authority and Issuance

Title 27, Code of Federal Regulations Part 9, American Viticultural Areas, is amended as follows:

PART 9—[AMENDED]

Paragraph 1. The authority citation for part 9 continues to read as follows:

Authority: 27 U.S.C. 205.

Par. 2. Section 9.123 is amended by revising paragraphs (c)(1) and (c)(9) through (c)(11) and adding new paragraph (c)(12) to read as follows:

§ 9.123 Mt. Veeder.

* * * * *

(c) * * *

(1) Beginning at unnamed peak, elevation 1,820, on the common boundary between Napa County and Sonoma County in section 23, Township 7 North, Range 6 West, Mount Diablo Base and Meridian on the Rutherford, Calif. U.S.G.S. map;

* * * * *

(9) Thence northwesterly along Dry Creek through Sections 3 and 4 of Township 6 North, Range 5 West, and Sections 32 and 31 of Township 7 North, Range 5 West, to the fork of Dry Creek near the center of Section 25 of Township 7 North, Range 6 West;

(10) Continuing along the northern fork of Dry Creek through Sections 25 and 24 of Township 7 North, Range 6 West, to the point at which the main channel of Dry Creek ends and divides into three tributaries;

(11) Thence following the middle tributary of Dry Creek through Sections 24 and 23 of Township 7 North, Range 6 West, to its source at the intersection with a trail indicated on the map;

(12) Thence following a straight line west approximately 1/10 mile to the top of unnamed peak, elevation 1,820, the beginning point.

Signed: November 10, 1993.

Daniel R. Black,

Acting Director.

Approved: November 29, 1993.

John P. Simpson,

Deputy Assistant Secretary, Regulatory, Tariff and Trade Enforcement.

[FR Doc. 93–30320 Filed 12–10–93; 8:45 am]

BILLING CODE 4810–31–U

DEPARTMENT OF HEALTH AND HUMAN SERVICES

Health Care Financing Administration

42 CFR Part 424

[BPO–114–FC]

RIN 0938–AG16

Medicare Program; Intermediary and Carrier Checks That Are Lost, Stolen, Defaced, Mutilated, Destroyed or Paid on Forged Endorsements

AGENCY: Health Care Financing Administration (HCFA), HHS.

ACTION: Final rule with comment period.

SUMMARY: This rule revises the Medicare regulations governing the procedures for replacing checks issued by our fiscal intermediaries and carriers that are lost, stolen, defaced, mutilated, destroyed, or paid on forged endorsements.

Each State already has an established legal process for pursuing a claim for recovery of the amount of a check paid on a forged endorsement, and it is inefficient and ineffective to provide duplicative Federal requirements. These regulations stipulate that any replacement or reclamation proceedings will be carried out in accordance with the applicable State law and that a replacement check will not be issued until Medicare has made recovery on the proceeds of the original check. However, we will continue to reissue checks that have not been negotiated.

DATES: Effective date: These regulations are effective on January 12, 1994.

Comment date: Written comments will be considered if we receive them at the appropriate address, as provided below, no later than 5 p.m. on February 11, 1994.

ADDRESSES: Mail written comments (an original and 3 copies) to the following address: Health Care Financing Administration, Department of Health and Human Services, Attention: BPO–114–FC, P.O. Box 26676, Baltimore, MD 21207.

If you prefer, you may deliver your written comments (an original and 3 copies) to one of the following addresses:

Room 309–G, Hubert H. Humphrey Building, 200 Independence Avenue, SW., Washington, DC 20201, or

Room 132, East High Rise Building, 6325 Security Boulevard, Baltimore, MD 21207.

Because of staffing and resource limitations, we cannot accept comments by facsimile (FAX) transmission. In commenting, please refer to file code BPO–114–FC. Comments received timely will be available for public inspection as they are received, generally beginning approximately 3 weeks after publication of a document, in room 309–G of the Department's offices at 200 Independence Avenue, SW., Washington, DC, on Monday through Friday of each week from 8:30 a.m. to 5 p.m. (phone: (202) 690–7890).

FOR FURTHER INFORMATION CONTACT: Sam Guida, (410) 966–7495.

SUPPLEMENTARY INFORMATION:

I. Background

Under sections 1816(a) and 1842(a) of the Social Security Act (the Act), public or private organizations and agencies may participate in the administration of the Medicare program under agreements or contracts entered into with the Secretary. These Medicare contractors are known as fiscal intermediaries (section 1816(a) of the Act) and carriers (section 1842(a) of the Act). Intermediaries perform bill processing and benefit payment functions for Part A of the program (Hospital Insurance) and carriers perform claims processing and benefit payment functions for Part B of the program (Supplementary Medical Insurance). When bills or claims are submitted, intermediaries and carriers are responsible for making appropriate benefit payments to the proper party.

Intermediaries and carriers, under the terms of their contracts with HCFA (acting for the Secretary), execute agreements for the processing of payments they issue and for the drawing of funds to cover those checks with commercial banks. The bank must be a member of the Federal Reserve System or insured by the Federal Deposit Insurance Corporation. These bank agreements, to which HCFA is also a party, provide for the establishment of a special account within the bank known as the Federal Health Insurance Benefits Account (the Account). Intermediaries and carriers may use the funds in the Account only for the purpose of making Medicare payments.

When a benefit check issued by the intermediary or carrier on the Account is presented to the bank, the bank processes the payment (pays the check). At the end of each business day, the bank presents a voucher to the Federal Reserve Bank in the amount of all checks drawn against the Account that day for credit to the Account. Intermediaries and carriers must submit monthly statements to HCFA showing the disbursements made from the Account.

Occasionally, payments to beneficiaries, physicians, providers and suppliers of services entitled to payment

are lost or misplaced, and the payee is unaware that the claim was processed and payment issued. To ensure that claimants receive payments to which they are entitled, and to better estimate monthly expenditures and payments from the Account, current HCFA manual instructions require intermediaries and carriers to establish written policies, procedures, and controls (consistent with local banking procedures) for contacting payees when checks have been outstanding over 6 months. Based on general commercial banking practice, our existing manual instructions require intermediaries and carriers to cancel (void) any check not presented for payment within 1 year from the date of issue. (Detailed requirements regarding Medicare checks are in section 4412 of the Medicare Carriers Manual, Part I, Fiscal Administration and section 1412 of the Medicare Intermediary Manual, Part I, Fiscal Administration.)

II. Current Regulations

On occasion, intermediaries and carriers are notified, either directly by the payee or during the routine contacts on outstanding checks, that a benefit check has been lost, stolen, defaced, mutilated, destroyed, or paid on a forged endorsement. Regulations regarding the replacement and reclamation of intermediary and carrier checks that are lost, stolen, defaced, mutilated, destroyed or paid on forged endorsements are located at 42 CFR 424.352 and 424.354. The Medicare statutes do not contain requirements regarding replacement and reclamation of Medicare payments. Our regulations were intended as an administrative mechanism to protect the beneficiary from incurring any loss resulting from a lost, stolen, or forged check.

Under current regulations at 42 CFR 424.352, we are responsible for coordinating the investigation and settlement of claims in connection with intermediary and carrier checks, including the determination that a check has been forged. If a check issued by an intermediary or carrier is lost or stolen and has not been paid, the intermediary or carrier must stop payment on the check and issue another check. If the check has been defaced, mutilated, or destroyed, the intermediary or carrier must recover any available remains of the check and issue a substitute check. In a case that involves a possible forged endorsement, we are responsible for analyzing the check to determine the authenticity of the endorsement, granting an independent administrative review to any payee dissatisfied with the determination, and forwarding a report to the appropriate intermediary or carrier. When we determine that a check has been paid on a forged endorsement, we instruct the intermediary or carrier to make settlement in favor of the payee if—(1) The facts show that the payee did not participate, directly or indirectly, in the proceeds of the payment; and (2) the payee, or the payee's authorized representative, after examining the check or a copy of the check, states in writing that to the best of his or her knowledge or belief, the endorsement is not the payee's. Under current § 424.352(d), the replacement check is issued before the intermediary or carrier pursues recovery of the amount of the check. Section 424.354 states that since checks issued by intermediaries and carriers are drawn on commercial banks, the intermediaries and carriers must take appropriate action to recover the amount of the check paid on a forged endorsement in accordance with applicable State law.

III. Program Experience

Our current regulations were developed to protect beneficiaries from loss when Medicare benefit checks were lost, stolen, defaced, mutilated, destroyed, or paid on forged endorsements. The regulations were not intended to override existing State law governing the negotiation and processing of commercial checks. Our previously cited manual instructions stipulate that all policies, procedures, and controls developed by the intermediaries and carriers should be consistent with local banking procedures.

Recently, some providers and suppliers of Medicare services have begun asking intermediaries and carriers to cover losses incurred as a result of checks paid on an endorsement executed by an employee or agent of the provider or supplier in the course of the provider's or supplier's business. These providers and suppliers argue that the language of § 424.352(d) obligates Medicare to make settlement in their favor, since they did not personally sign the check.

Replacement of checks in cases of larceny after trust, conversion, embezzlement, and other similar situations are beyond the intended scope of the regulations. To view the regulations as an alternative pathway for providers and suppliers to recover their business losses without seeking restitution through the appropriate State law incorrectly interjects HCFA into existing State processes for investigating criminal behavior and fixing liability for checks paid on forged endorsements. The final determination that a forgery has occurred is more appropriately decided in accordance with the individual State laws. This includes any Federal laws and regulations governing the banking process that may be applicable to any such State proceeding. Reclamation proceedings, though they are State mechanisms, must of course acknowledge any Federal oversight of the banking process as it affects those proceedings.

Accordingly, we have determined that certain procedures currently set forth in 42 CFR 424.352 and 424.354 are unnecessary, overly broad, and need to be clarified because they duplicate services already provided to payees under State law. Checks issued by Medicare intermediaries and carriers are drawn on commercial banks and are under the jurisdiction of applicable State banking laws and procedures. They are not checks issued by the U.S. Treasury Department and are therefore not subject to the overriding Federal laws or Treasury Department regulations that govern Treasury checks. State law governing and affecting commercial transactions is adequate to determine the legal issues, rights and objections of the parties involved in the final disposition of claims resulting from intermediary and carrier checks that are lost, stolen, defaced, mutilated, destroyed, or paid on a forged endorsement. A well-developed system for the fixing of liability on commercial paper already exists in title 3, part 4, of the Uniform Commercial Code (UCC) or successor provisions. Virtually all States have adopted similar versions of the UCC. The fixing of liability for a forged check under the UCC is dependent upon the circumstances of each case. Generally, liability could be fixed upon three entities: The forger, the entity that made payment to the forger (usually a bank, called the bank of first presentment or first deposit), or the bank in which the payor's funds are kept (the drawee or issuing bank).

We believe checks issued by Medicare intermediaries and carriers should be negotiated and processed in accordance with the State laws and banking procedures which regulate other checks drawn on commercial banks. Neither HCFA nor the intermediaries and carriers should be required to duplicate services (required by State law) already provided to all payees. We are, therefore, amending the procedures relating to replacement and reclamation of checks paid on forged endorsements as specified in 42 CFR 424.350, 424.352 and 424.354 to state that recovery claims should be pursued in accordance with the appropriate State laws and

banking regulations, including any Federal laws and regulations governing the banking process that may affect the appropriate State proceeding. Once the bank of first deposit or presentment settles on the forged check, the intermediary or carrier will reissue a check to the payee. A more detailed explanation follows.

IV. Provisions of the Regulations

Section 424.350, Replacement of U.S. Government checks that are lost, stolen, defaced, mutilated, destroyed, or paid on forged endorsements, is revised to redesignate the current language relating to replacement of U.S. Government checks as paragraph (a), and to add a new paragraph (b) relating to checks issued by intermediaries and carriers. This paragraph explains that because checks issued by intermediaries and carriers are not subject to the Federal laws and Treasury Department regulations governing Treasury checks, replacement procedures are carried out in accordance with § 424.352 under applicable State law. This language was previously found in § 424.354, Reclamation proceedings: Checks issued by carriers or intermediaries. This section, describing the reclamation proceedings intermediaries and carriers follow when HCFA determines that a check has been paid on a forged endorsement, is being removed. Under the regulation as revised, reclamation proceedings are not being eliminated, but will instead be provided solely under the jurisdiction and established procedures of the applicable State law.

We are amending our regulations at 42 CFR 424.352, Replacement of intermediary and carrier checks that are lost, stolen, defaced, mutilated, destroyed, or paid on forged endorsement. The revised regulation provides that when the payee alleges that a check issued by an intermediary or carrier has been lost, stolen, defaced, mutilated, destroyed, or paid on a forged endorsement, the intermediary or carrier will contact its designated commercial bank and determine whether the check has been negotiated.

If the check has been negotiated, the intermediary or carrier will not initially replace the check but will provide the legitimate payee, upon request, a copy of the check and other pertinent information (a claim form, affidavit or questionnaire to be completed by the payee) required to pursue his or her claim and recovery rights in accordance with State law and commercial banking regulations. However, claims must be filed within 1 year or such longer period as may be provided in applicable State law.

To pursue a claim, the payee (or authorized representative) must examine the check, complete the claim form, and state in writing that the endorsement is not the payee's.The claim form and other pertinent information is sent to the intermediary or carrier for review and processing of the claim. The intermediary or carrier reviews the claim form and if it determines that the claim appears to be valid, it will forward the claim form along with a copy of the check to the issuing bank.

The proceedings that follow will be conducted in accordance with State law and bank regulations. The role of the Medicare intermediary or carrier in these proceedings will be fixed by such State law. Throughout the process, the Medicare intermediary or carrier will be expected to track the status of claims and be responsive to questions from payees, particularly beneficiary payees. While this process may differ somewhat across States, we are providing, for informational purposes, a general description of how these claims are resolved.

The issuing bank generally sends the forgery documents via certified mail to the bank of first deposit. The bank of first deposit will generally conduct an investigation before it settles on the forged endorsement and in some cases could refuse to settle on the forged check. For example, the bank of first deposit might discover that the particular check was credited to the beneficiary's or provider's account at that bank or the beneficiary had endorsed the check over to his or her doctor, etc.

In some cases the bank of first deposit may request that the payee file a police report and certify that the endorsement is a forgery before the bank makes restitution. The payee may also need to certify that the check was not cashed by an agent of the payee.

In most instances, the bank of first deposit will make settlement in favor of the payee and send a cashier's check to the issuing (Medicare) bank. Upon receipt of the cashier's check, the issuing bank will credit the Federal Health Insurance Benefits Account for the intermediary or carrier. If settlement is made with the bank of first deposit, an advice (notice) of deposit will be sent to the intermediary or carrier. This notification will reflect both the amount and date of the deposit into the Federal Health Insurance Benefits Account. Our revised regulations provide that once the bank of first deposit settles on the forged check, the intermediary or carrier will reissue the check to the payee.

In those cases where the payee's agent commits the forgery, or in other instances where the bank of first deposit refuses to settle the original check because it determines, in accordance with State law, that there is good cause to believe that the endorsement was not improper, the intermediary or carrier will reject the payee's claim for a replacement check.

A replacement check will not be issued until recovery is made on the original check. This will assure that no duplicate payments are made to the same payee.

If the check has not been negotiated, the intermediary or carrier will ask the bank to stop payment and will reissue the check. Consistent with local banking practice and our current manual instructions to intermediaries and carriers, the revised regulation also requires that, in general, any claim for a replacement check must be received by the intermediary or carrier no later than 1 year from the date of issuance of the original check or such longer period as may be provided in applicable State law. Intermediaries and carriers will not reissue a check to a payee who makes a claim after this deadline has passed.

V. Waiver of Notice of Proposed Rulemaking

We ordinarily publish a notice of proposed rulemaking in the **Federal Register** and invite prior public comment on a proposed rule. The rule includes a reference to the legal authority under which it is proposed, and the terms and substance of the proposed rule or a description of the subjects and issues involved. However, this procedure can be waived when an agency finds good cause that a notice-and-comment procedure is impracticable, unnecessary, or contrary to the public interest, and incorporates a statement of the finding and its reasons in the rule issued. This final rule clarifies that State law procedural requirements are to be followed by a payee when a check issued by a Medicare intermediary or carrier is lost, stolen, defaced, mutilated, destroyed, or paid on a forged endorsement. This rule continues to ensure quick replacement of funds when a check has not been endorsed, but provides that the recovery and reclamation activities of endorsed checks will be carried out in accordance with applicable State law.

It is not in the public interest to commit Federal funds as an alternative manner of satisfying a claim that should be pursued under State law or as a substitute for readily available remedies under State law. Moreover, Medicare intermediaries and carriers are removed

from the facts in these matters and less able to investigate and resolve forgeries than are those directly involved. The applicability of State law is clear and no useful purpose would be served by publishing a proposed rule. Therefore, we conclude that it would be impracticable, unnecessary, and contrary to the public interest to publish a proposed rule and solicit comments. We, therefore, find good cause to waive notice of proposed rulemaking.

VI. Response to Comments

Because of the large number of items of correspondence we normally receive on a final rule with comment, we are not able to acknowledge or respond to them individually. However, we will consider all comments that we receive by the date and time specified in the "Dates" section of this preamble, and if we conclude that revision of this final rule is necessary, we will respond to the comments in a subsequent **Federal Register** publication.

VII. Collection of Information Requirements

This final rule contains no information collection requirements. Consequently, this rule need not be reviewed by the Office of Management and Budget under the authority of the Paperwork Reduction Act of 1980 (44 U.S.C. 3501 *et seq.*).

VIII. Regulatory Impact Statement

We generally prepare a regulatory flexibility analysis that is consistent with the Regulatory Flexibility Act (RFA) (5 U.S.C. 601 through 612) unless the Secretary certifies that a final rule will not have a significant economic impact on a substantial number of small entities. For purposes of the RFA, providers and suppliers are considered to be small entities. However, all States, individuals, intermediaries and carriers are not considered to be small entities.

Also, section 1102(b) of the Act requires the Secretary to prepare a regulatory impact analysis if a final rule may have a significant impact on the operations of a substantial number of small rural hospitals. This analysis must conform to the provisions of section 604 of the RFA. For purposes of section 1102(b) of the Act, we define a small rural hospital as a hospital that is located outside of a Metropolitan Statistical Area and has fewer than 50 beds.

This final rule with comment revises the regulations governing the replacement of carrier or intermediary checks that are lost, stolen, defaced, mutilated, destroyed or paid on forged endorsements. This final rule will not affect any claims pending on the date of publication.

We do not believe that this final rule with comment period will significantly impact either the workload, costs, or responsibilities of the States or commercial banks. The States already bear prime responsibility for the regulation of commercial banking transactions and prosecution of cases involving forged checks. The issue of forged endorsements on Medicare checks arises in only a relatively small number of cases. Medicare intermediaries and carriers have no direct knowledge of the facts in these situations and must rely on parties that are directly involved to provide the necessary evidence for effective reclamation. Further, the banks already conduct the type of investigative work required in these cases.

As a result of this final rule, HCFA and the Medicare intermediaries and carriers will have somewhat fewer responsibilities with respect to endorsed checks. The Medicare contractor will continue to reissue checks to payees in cases where the original check has not been negotiated once a stop payment order has been executed. This duplicates current practice.

This rule also requires that the claim for a replacement check be received by the Medicare intermediary or carrier within 1 year (or such longer period as may be provided in applicable State law) from the date of issuance of the original check. This new limitation on a claim for a replacement check is in accordance with current commercial banking practice and also reflects the Treasury Department's practice with respect to U.S. Government checks. It is also consistent with the current Medicare contractor practice of voiding any check not presented for payment within 1 year from the date of issuance. This rule will not require any revision in intermediary or carrier contracts with Medicare.

When an intermediary or carrier check has been negotiated, Medicare beneficiaries, providers and suppliers will experience a procedural change; that is, Medicare contractors will not automatically reissue a check prior to pursuing recovery of the alleged improperly negotiated funds. Instead, the payee must review the check and complete a claim form or affidavit furnished by the Medicare contractor, which will be used as evidence in recovering the proceeds of the check with the servicing bank or other responsible party in accordance with applicable State law and regulations. We do not believe that this change will significantly disadvantage legitimate payees, since it conforms to general banking and Treasury Department practice which is to first recover the funds before issuing a replacement check in cases of alleged forgery. Most forgery cases are settled quickly. After recovery of the funds by the issuing bank which has the Medicare account, the intermediary or carrier reissues the check to the payee. If the bank of presentment refuses to settle (for good cause), then the payee must pursue the claim on his or her own. In this situation, a replacement check will not be issued by Medicare to the payee.

We are not preparing analyses for either the RFA or section 1102(b) of the Act since we have determined, and the Secretary certifies, that this final rule with comment period will not result in a significant economic impact on a substantial number of small entities and will not have a significant economic impact on the operations of a substantial number of small rural hospitals.

List of Subjects in 42 CFR Part 424

Emergency medical services, Health facilities, Health professions, Medicare.

42 CFR part 424 is amended as set forth below:

PART 424—CONDITIONS FOR MEDICARE PAYMENT

1. The authority citation for part 424 continues to read as follows:

Authority: Secs. 216(j), 1102, 1814, 1815(c), 1835, 1842(b), 1861, 1866(d), 1870 (e) and (f), 1871 and 1872 of the Social Security Act (42 U.S.C. 416(j), 1302, 1395f, 1395g(c), 1395n, 1395u(b), 1395x, 1395cc(d), 1395gg (e) and (f), 1395hh and 1395ii).

Subpart M—Replacement and Reclamation of Medicare Payments

2. Section 424.350 is revised to read as follows:

§ 424.350 Replacement of checks that are lost, stolen, defaced, mutilated, destroyed, or paid on forged endorsements.

(a) *U.S. Government checks*—(1) *Responsibility.* The Treasury Department is responsible for the investigation and settlement of claims in connection with Treasury checks issued on behalf of HCFA.

(2) *Action by HCFA.* HCFA forwards reports of lost, stolen, defaced, mutilated, destroyed, or forged Treasury checks to the Treasury Department disbursing center responsible for issuing checks.

(3) *Action by the Treasury Department.* The Treasury Department will replace and begin reclamation of Treasury checks in accordance with Treasury Department regulations (31 CFR parts 235, 240, and 245).

(b) *Intermediary and carrier benefit checks.* Checks issued by intermediaries and carriers are drawn on commercial banks and are not subject to the Federal laws and Treasury Department regulations that govern Treasury checks. Replacement procedures are carried out in accordance with § 424.352 under applicable State law (including any Federal banking laws or regulations that may affect the relevant State proceedings).

3. Section 424.352 is revised to read as follows:

§ 424.352 Intermediary and carrier checks that are lost, stolen, defaced, mutilated, destroyed or paid on forged endorsements.

(a) When an intermediary or carrier is notified by a payee that a check has been lost, stolen, defaced, mutilated, destroyed, or paid on forged endorsement, the intermediary or carrier contacts the commercial bank on whose paper the check was drawn and determines whether the check has been negotiated.

(b) If the check has been negotiated—

(1) The intermediary or carrier provides the payee with a copy of the check and other pertinent information (such as a claim form, affidavit or questionnaire to be completed by the payee) required to pursue his or her claim in accordance with State law and commercial banking regulations.

(2) To pursue the claim, the payee must examine the check and certify (by completing the claim form, questionnaire or affidavit) that the endorsement is not the payee's.

(3) The claim form and other pertinent information is sent to the intermediary or carrier for review and processing of the claim.

(4) The intermediary or carrier reviews the payee's claim. If the intermediary or carrier determines that the claim appears to be valid, it forwards the claim and a copy of the check to the issuing bank. The intermediary or carrier takes further action to recover the proceeds of the check in accordance with the State law and regulations.

(5) Once the intermediary or carrier recovers the proceeds of the initial check, the intermediary or carrier issues a replacement check to the payee.

(6) If the bank of first deposit refuses to settle on the check for good cause, the payee must pursue the claim on his or her own and the intermediary or carrier will not reissue the check to the payee.

(c) If the check has not been negotiated—

(1) The intermediary or carrier arranges with the bank to stop payment on the check; and

(2) Except as provided in paragraph (d), the intermediary or carrier reissues the check to the payee.

(d) No check may be reissued under (c)(2) unless the claim for a replacement check is received by the intermediary or carrier no later than 1 year from the date of issuance of the original check, unless State law (including any applicable Federal banking laws or regulations that may affect the relevant State proceeding) provides a longer period which will control.

§ 424.354 [Removed]

4. Section 424.354 is removed.

(Catalog of Federal Domestic Assistance Program No. 93.773, Medicare—Hospital Insurance; and Program No. 93.774, Medicare—Supplementary Medical Insurance Program)

Dated: June 11, 1993.

Bruce Vladeck,

Administrator, Health Care Financing Administration.

Dated: August 31, 1993.

Donna E. Shalala,

Secretary.

[FR Doc. 93–30088 Filed 12–10–93; 8:45 am]

BILLING CODE 4120–01–P

DEPARTMENT OF THE INTERIOR

Bureau of Land Management

43 CFR Public Land Order 7021

[AK–932–4210–06; J–010160]

Partial Revocation of Public Land Order No. 1731 for Selection of Land by the State of Alaska; Alaska

AGENCY: Bureau of Land Management, Interior.

ACTION: Public land order.

SUMMARY: This order revokes a public land order insofar as it affects 75.67 acres of National Forest System land withdrawn for use by the Forest Service, Department of Agriculture, for the Upper Trail Lake Recreation Area. The land is no longer needed for the purpose for which it was withdrawn. This action also opens the land for selection by the State of Alaska, if such land is otherwise available. Any land described herein that is not conveyed to the State will be subject to the terms and conditions of the national forest reservation and any other withdrawal of record.

EFFECTIVE DATE: December 13, 1993.

FOR FURTHER INFORMATION CONTACT: Sandra C. Thomas, BLM Alaska State Office, 222 W. 7th Avenue, No. 13, Anchorage, Alaska 99513–7599, 907–271–5477.

By virtue of the authority vested in the Secretary of the Interior by Section 204 of the Federal Land Policy and Management Act of 1976, 43 U.S.C. 1714 (1988), it is ordered as follows:

1. Public Land Order No. 1731, which withdrew lands for use by the Forest Service, is hereby revoked insofar as it affects the following described land:

Seward Meridian

Chugach National Forest

Located within T. 5 N., R. 1 W., more particularly describe as: Lot 3, U.S. Survey No. 7371.

The area described contains 75.67 acres.

2. Subject to valid existing rights, the land described above is hereby opened for selection by the State of Alaska under the Alaska Statehood Act of July 7, 1958, 48 U.S.C. note prec. 21 (1988).

3. The State of Alaska application for selection made under Section 6(a) of the Alaska Statehood Act of July 7, 1958, and under Section 906(e) of the Alaska National Interest Lands Conservation Act, 43 U.S.C. 1635(e)(1988), becomes effective without further action by the State upon publication of this public land order in the **Federal Register**, if such land is otherwise available. Land not conveyed to the State will be subject to the terms and conditions of the Chugach National Forest reservation and any other withdrawal of record.

Dated: November 30, 1993.

Bob Armstrong,

Assistant Secretary of the Interior.

[FR Doc. 93–30291 Filed 12–10–93; 8:45 am]

BILLING CODE 4310–JA–M

DEPARTMENT OF TRANSPORTATION

Coast Guard

46 CFR Parts 1 and 67

[CGD 89–007; CGD 89–007a]

RIN 2115–AD60

Documentation of Vessels; Recording of Instruments; Fees

AGENCY: Coast Guard, DOT.

ACTION: Final rule; correction.

SUMMARY: This document contains corrections to the final rule that was published Monday, November 15, 1993 (58 FR 60256). The rules related to recording practices and procedures for the documentation of vessels, and user fees for vessel documentation services.

EFFECTIVE DATE: December 13, 1993.

FOR FURTHER INFORMATION CONTACT: Mrs. Patricia J. Williams, Chief, Vessel Documentation Section, Vessel

Documentation and Tonnage Survey Branch at (202) 267–1492.

SUPPLEMENTARY INFORMATION: The final rule that this document corrects amended 46 CFR part 1 and revised 46 CFR part 67. The final rule established new recording practices to fully implement the provisions of the codification of the Ship Mortgage Act, 1920; revised existing user fees and established new fees for vessel documentation services; and simplified and streamlined the vessel documentation process. As published, the final rule contains several errors which this document corrects.

Correction

In rule document 93–27840 beginning on page 60256 in the issue of Monday, November 15, 1993, make the following corrections:

1. On page 60256, in the 2nd column, in the last paragraph, in the 8th line from the end, "U.S.C. 2210." is corrected to read "U.S.C. 2110."

2. On page 60258, in the 1st column, in the last paragraph, in the 11th and 12th lines from the end, the parenthetical "First Proviso" and "Second Provison")" is corrected to read "(First Proviso" and "Second Proviso")".

3. On page 60258, in the 1st column, in the last paragraph, in the 5th line from the end, "Both Coast" is corrected to read "Both the Coast".

4. On page 60258, in the 2nd column, in the first full paragraph, in line 4, "which as the subject" is corrected to read "which was the subject".

5. On page 60259, in the 1st column, in line 4 from the top, "an presumptions" is corrected to read "any presumptions".

6. On page 60259, in the 1st column, in the 1st full paragraph, the next to last line of the paragraph, "citizenship requirements of 2 of the" is corrected to read "citizenship requirements of section 2 of the".

7. On page 60259, in the 1st column, in the 2nd full paragraph, in the 12th line, "U.S.C. 121102(a)(4)," is corrected to read "U.S.C. 12102(a)(4),".

8. On page 60259, in the 2nd column, in the 1st full paragraph, in the 19th and 20th lines, "Also as noted the NPRM" is corrected to read "Also as noted in the NPRM".

9. On page 60260, in the 1st column, in the 3rd full paragraph, in the 12th and 13th lines, "issuance of duplicate Builder's Certification." is corrected to read "issuance of duplicate Builder's Certifications."

10. On page 60260, in the 1st column, in the 3rd full paragraph, in the 22nd line, "central registry of" is corrected to read "central registry or".

11. On page 60260, in the 1st column, in the 4th full paragraph, in the last line, "will rarely, if even" is corrected to read "will rarely, if ever".

12. On page 60260, in the 2nd column, in the 1st full paragraph, in the 5th line, "Subpart of" is corrected to read "Subpart G of".

13. On page 60260, in the 2nd column, in the 2nd full paragraph, in the 27th line, "jurisdiction as a foreclosure action." is corrected to read "jurisdiction in a foreclosure action."

14. On page 60261, in the 2nd column, in the last full paragraph, in the 19th line, "Certificate of Documentations." is corrected to read "Certificate of Documentation."

15. On page 60261, in the 3rd column, in the last paragraph, in the 8th line from the bottom, "30-day grade period" is corrected to read "30-day grace period".

16. On page 60264, in the 1st column, in the last paragraph, in the 6th line, "restrictions attached" is corrected to read "restrictions attach".

§ 67.19 [Corrected]

17–18. On page 60269, in the 3rd column, in § 67.19(c)(2), "vessel" is corrected to read "vessels".

§ 67.43 [Corrected]

19. On page 60270, in the 3rd column, in § 67.43, "Application for Initial Issue, Exchange, or Replacement Certificate of Documentation; or Redocumentation" is corrected to read "Application for Initial Issue, Exchange, or Replacement of Certificate of Documentation; or Redocumentation".

§ 67.111 [Corrected]

20. On page 60274, in the 1st column, in § 67.111(a) introductory text, "Application for Initial Issue, Exchange, or Replacement Certificate of Documentation; or Redocumentation" is corrected to read "Application for Initial Issue, Exchange, or Replacement of Certificate of Documentation; or Redocumentation".

§ 67.113 [Corrected]

21. On page 60274, in the 1st column, in the introductory text of § 67.113, "Application for Documentation, Exchange or Replacement of Document; or Redocumentation" is corrected to read "Application for Initial Issue, Exchange, or Replacement of Certificate of Documentation; or Redocumentation".

§ 67.117 [Corrected]

22. On page 60274, in the 3rd column, in § 67.117(a) introductory text, "Application for Initial Issue, Exchange, or Replacement Certificate of Documentation; or Redocumentation" is corrected to read "Application for Initial Issue, Exchange, or Replacement of Certificate of Documentation; or Redocumentation."

§ 67.141 [Corrected]

23. On page 60276, in the 1st column, in § 67.141(a)(1), "Application for Initial Issue, Exchange, or Replacement Certificate of Documentation; or Redocumentation" is corrected to read "Application for Initial Issue, Exchange, or Replacement of Certificate of Documentation; or Redocumentation."

§ 67.143 [Corrected]

24. On page 60276, in the 1st column, in § 67.143, "Consent of Mortgagee to Exchange of Certificate of Documentation or Withdrawal of Application for Documentation" is corrected to read "Application, Consent, and Approval for Withdrawal of Application for Documentation or Exchange of Certificate of Documentation".

§ 67.145 [Corrected]

25. On page 60276, in the 2nd column, in § 67.145(d), "Abstract of Title" is corrected to read "General Index or Abstract of Title".

§ 67.165 [Corrected]

26. On page 60277, in the 1st column, in § 67.165(a), "paragraph § 67.9(c)" is corrected to read "paragraph (c) of § 67.9".

§ 67.173 [Corrected]

27. On page 60278, in the 2nd column, in the first sentence of § 67.173, the cross-reference to § 67.167 is corrected to refer to § 67.161.

§ 67.217 [Corrected]

28. On page 60279, in the 3rd column, in § 67.217(a)(3), "replacement" is corrected to read "Replacement".

§ 67.217 [Corrected]

29. On page 60280, in the 1st column, in § 67.217(a)(4), "Application, Consent and Approval" is corrected to read "Application, Consent, and Approval."

Subpart Y—[Corrected]

30. On page 60282, in the 3rd column, "Subpart Y—[Reserved]" is corrected to read "Subpart Y—Fees".

§ 67.500 [Corrected]

31. On page 60282, in the 3rd column, in § 67.500(a), "specifics" is corrected to read "specifies".

Appendix A to Part 67—[Corrected]

32. On page 60284, in Appendix A to Part 67—Ports of Documentation, in the entry for Houston, TX, the line under CG district served which reads "Eighth District: Texas and Mexico only." is corrected to read "Eighth District: Texas and New Mexico only.".

Dated: December 6, 1993.

R.C. North,

Captain, U.S. Coast Guard, Acting Chief, Office of Marine Safety, Security and Environmental Protection.

[FR Doc. 93–30386 Filed 12–10–93; 8:45 am]

BILLING CODE 4910–14–M

FEDERAL COMMUNICATIONS COMMISSION

47 CFR Part 73

[MM Docket No. 90–162; DA 93–1462]

Broadcast Service; Financial Interest and Syndication Rule

AGENCY: Federal Communications Commission.

ACTION: Final rule; confirmation of effective date.

SUMMARY: This document confirms the effective date for amendments to § 73.661, concerning financial interest and syndication reporting rules which were published at 58 FR 62547, November 29, 1993.

EFFECTIVE DATE: The regulations are effective December 29, 1993.

FOR FURTHER INFORMATION CONTACT: David E. Horowitz, Policy and Rules Division, Mass Media Bureau (202) 632–7792.

SUPPLEMENTARY INFORMATION:

December 6, 1993.

Financial Interest and Syndication Rule Reporting Requirements Effective December 29, 1993

On September 23, 1993, the Commission adopted a *Memorandum Opinion and Order (MO&O)* in MM Docket No. 90–162, FCC 93–458 (released Oct. 22, 1993), 58 FR 62547 (Nov. 29, 1993). This *MO&O*, inter alia, amended § 73.661 of the Commission's Rules (the financial interest and syndication rule reporting requirements). In the *MO&O*, we stated that the amendments to § 73.661 would become effective 30 days after publication in the **Federal Register** or upon approval by the Office of Management and Budget (OMB), whichever is later. OMB approved the amendments on November 22, 1993 (OMB Control No. 3060–0479). The *MO&O* was published thereafter in the **Federal Register** on November 29, 1993. Accordingly, the amendments to Section 73.661, as promulgated in the *MO&O*, will become effective on December 29, 1993.

Federal Communications Commission.

William F. Caton,

Acting Secretary.

[FR Doc. 93–30286 Filed 12–10–93; 8:45 am]

BILLING CODE 6712–01–M

47 CFR Part 73

[MM Docket No. 93–205; RM–8270]

Radio Broadcasting Services; Donalsonville, GA

AGENCY: Federal Communications Commission.

ACTION: Final rule.

SUMMARY: This document allots Channel 271A to Donalsonville, Georgia, as that community's second local FM service, at the request of Seminole-Decatur Radio Company. See 58 FR 39494, July 23, 1993. Channel 271A can be allotted to Donalsonville in compliance with the Commission's minimum distance separation requirements with a site restriction of 7.2 kilometers (4.5 miles) northwest, in order to avoid short-spacings to a construction permit for Station WWSG(FM), Channel 271A, Sylvester, Georgia, and the licensed site of Station WPHK(FM), Channel 272A, Blountstown, Florida. The coordinates for Channel 271A at Donalsonville are North Latitude 31–05–32 and West Longitude 84–55–55. With this action, this proceeding is terminated.

DATES: Effective January 24, 1994. The window period for filing applications for Channel 271A at Donalsonville, Georgia, will open on January 25, 1994 and close on February 24, 1994.

FOR FURTHER INFORMATION CONTACT: Nancy J. Walls, Mass Media Bureau, (202) 634–6530.

SUPPLEMENTARY INFORMATION: This is a synopsis of the Commission's Report and Order, MM Docket No. 93–205, adopted November 3, 1993, and released December 8, 1993. The full text of this Commission decision is available for inspection and copying during normal business hours in the FCC Reference Center (room 239), 1919 M Street, NW., Washington, DC. The complete text of this decision may also be purchased from the Commission's copy contractors, International Transcription Service, Inc., (202) 857–3800, 1919 M Street, NW., room 246, or 2100 M Street, NW., Suite 140, Washington, DC 20037.

List of Subjects in 47 CFR Part 73

Radio broadcasting.

Part 73 of title 47 of the Code of Federal Regulations is amended as follows:

PART 73—[AMENDED]

1. The authority citation for part 73 continues to read as follows:

Authority: 47 U.S.C. 154, 303.

§ 73.202 [Amended]

2. Section 73.202(b), the Table of FM Allotments under Georgia, is amended by adding Donalsonville, Channel 271A.

Federal Communications Commission.

Victoria M. McCauley,

Assistant Chief, Allocations Branch, Policy and Rules Division, Mass Media Bureau.

[FR Doc. 93–30324 Filed 12–10–93; 8:45 am]

BILLING CODE 6712–01–M

47 CFR Part 73

[MM Docket No. 93–138; RM–8225]

Radio Broadcasting Services; Lahoma, OK

AGENCY: Federal Communications Commission.

ACTION: Final rule.

SUMMARY: The Commission, at the request of Donald W. McCoy, substitutes Channel 239C3 for Channel 239A at Lahoma, Oklahoma, and modifies Station KMKZ's construction permit to specify operation on the higher class channel. Channel 239C3 can be allotted to Lahoma in compliance with the Commission's minimum distance separation requirements with a site restriction of 4.8 kilometers (3 miles) northeast, at coordinates North Latitude 36–25–00 and West Longitude 98–03–00, to accommodate petitioner's desired transmitter site. With this action, this proceeding is terminated.

EFFECTIVE DATE: January 24, 1994.

FOR FURTHER INFORMATION CONTACT: Leslie K. Shapiro, Mass Media Bureau, (202) 634–6530.

SUPPLEMENTARY INFORMATION: This is a synopsis of the Commission's Report and Order, MM Docket No. 93–138, adopted November 4, 1993, and released December 8, 1993. The full text of this Commission decision is available for inspection and copying during normal business hours in the FCC Reference Center (room 239), 1919 M Street, NW., Washington, DC. The complete text of this decision may also be purchased from the Commission's copy contractor, International Transcription Service, Inc., (202) 857–3800, 2100 M Street, NW., Suite 140, Washington, DC 20037.

List of Subjects in 47 CFR Part 73

Radio broadcasting.

Part 73 of title 47 of the Code of Federal Regulations is amended as follows:

PART 73—[AMENDED]

1. The authority citation for part 73 continues to read as follows:

Authority: 47 U.S.C. 154, 303.

§ 73.202 [Amended]

2. Section 73.202(b), the Table of FM Allotments under Oklahoma, is amended by removing Channel 239A and adding Channel 239C3 at Lahoma.

Federal Communications Commission.

Victoria M. McCauley,

Assistant Chief, Allocations Branch, Policy and Rules Division, Mass Media Bureau.

[FR Doc. 93–30325 Filed 12–10–93; 8:45 am]

BILLING CODE 6712–01–M

47 CFR Part 73

[MM Docket No. 93–122; RM–8216, RM–8300]

Radio Broadcasting Services; Clarkrange and Monterey, TN

AGENCY: Federal Communications Commission.

ACTION: Final rule.

SUMMARY: The Commission, at the request of New Hope Radio (RM–8300), allots Channel 284A to Monterey, Tennessee. Channel 284A can be allotted to Monterey in compliance with the Commission's minimum distance separation requirements with a site restriction of 14.6 kilometers (9.0 miles) northeast in order to avoid a short-spacing to Station WSGM–FM, Channel 284A, Coalmont, Tennessee. The coordinates for the allotment of Channel 284A at Monterey are 36–15–29 and 85–10–48. The proposal filed by New Radio (RM–8216), see 58 FR 31184, June 1, 1993, requesting the allotment of Channel 284A to Clarkrange, Tennessee, is denied because Clarkrange is not a community for allotment purposes. With this action, this proceeding is terminated.

DATES: Effective January 24, 1994. The window period for filing applications will open on January 25, 1994, and close on February 24, 1994.

FOR FURTHER INFORMATION CONTACT: Pamela Blumenthal, Mass Media Bureau, (202) 634–6530.

SUPPLEMENTARY INFORMATION: This is a synopsis of the Commission's Report and Order, MM Docket No. 93–122, adopted November 3, 1993, and released December 8, 1993. The full text of this Commission decision is available for inspection and copying during normal business hours in the FCC Reference Center (room 239), 1919 M Street, NW., Washington, DC. The complete text of this decision may also be purchased from the Commission's copy contractor, ITS, Inc., (202) 857–3800, 2100 M Street, NW., Suite 140, Washington, DC 20037.

List of Subjects in 47 CFR Part 73

Radio broadcasting.

Part 73 of title 47 of the Code of Federal Regulations is amended as follows:

PART 73—[AMENDED]

1. The authority citation for part 73 continues to read as follows:

Authority: 47 U.S.C. 154, 303.

§ 73.202 [Amended]

2. Section 73.202(b), the Table of FM Allotments under Tennessee, is amended by adding Monterey, Channel 284A.

Federal Communications Commission.

Victoria M. McCauley,

Assistant Chief, Allocations Branch, Policy and Rules Division, Mass Media Bureau.

[FR Doc. 93–30328 Filed 12–10–93; 8:45 am]

BILLING CODE 6712–01–M

DEPARTMENT OF COMMERCE

National Oceanic and Atmospheric Administration

50 CFR Part 216

[Docket No. 931109–3309; I.D. 110293A]

Taking and Importing of Marine Mammals; Waiver of the Moratorium

AGENCY: National Marine Fisheries Service (NMFS), National Oceanic and Atmospheric Administration (NOAA), Commerce.

ACTION: Final rule; technical amendment.

SUMMARY: NMFS issues this final rule to remove expired and duplicative regulations governing the return of marine mammal management to states. This rule is to provide uniform and updated regulations.

EFFECTIVE DATE: This rule is effective on December 13, 1993.

FOR FURTHER INFORMATION CONTACT: Kenneth R. Hollingshead, fishery biologist, Office of Protected Resources, National Marine Fisheries Service, 1335 East West Highway, Silver Spring, MD 20910.

SUPPLEMENTARY INFORMATION: On January 15, 1974 (39 FR 1851), NMFS promulgated implementing regulations governing the taking and importing of marine mammals. Included in this rulemaking at 50 CFR 216.4, were provisions concerning state laws and regulations. On August 31, 1976 (41 FR 36659), NMFS promulgated additional regulations establishing a new subpart H to part 216 that implemented a procedure for the review and approval of state laws and regulations governing the taking and importing of marine mammals (i.e., return of management authority). Subpart H was subsequently removed on May 6, 1983 (48 FR 20614) when new regulations governing the transfer of marine mammals management were promulgated in part 403 of title 50.

In the 1976 rulemaking, an error was made that left duplicative and unnecessary regulatory text. The preamble to the 1976 regulations stated that: "Section 216.4(a) is retained and § 216.4(b) is replaced by a cross-reference to Subpart H. All other paragraphs of § 216.4 are deleted since they are duplicated in § 216.103." However, these paragraphs were inadvertently not deleted from § 216.4. In addition, because subpart H to part 216 has now been replaced by part 403, the cross reference to subpart H is no longer appropriate.

On January 11, 1979 (44 FR 2547), NMFS promulgated regulations at subpart I of 50 CFR part 216 governing the waiver of the moratorium on taking marine mammals for the State of Alaska. The preamble to these regulations noted that the provisions of subpart I would become effective when the Administrator, NOAA, determines (in accordance with section 109(a)(2) of the Marine Mammal Protection Act of 1972 (MMPA), and 50 CFR part 216, subpart H) that Alaskan laws and regulations are consistent with the MMPA. (It should be noted that as a result of the 1981 amendments to MMPA, section 109(a)(2) was renumbered as section 109(b)(1)). As that determination has never been made, and because the conditions under which the original waiver request was submitted no longer exist, these regulations are considered invalid and are hereby removed.

Classification

This technical amendment is issued as a final rule under 50 CFR part 216 and complies with E.O. 12866. Because this rule only removes duplicative, unnecessary and outdated text, the Assistant Administrator for Fisheries, NOAA, under section 553 (b)(B) and (d) of the Administrative Procedure Act (5 U.S.C. 553 *et seq.*), for good cause finds that it is unnecessary to provide notice and public comment on this rule, or to delay for 30 days its effective date. Because this rule is being issued

without prior public comment, a regulatory flexibility analysis is not required under the Regulatory Flexibility Act, and none has been prepared. This final rule is expected to result in no economic costs to the public.

This action is categorically excluded from the requirement to prepare an environmental assessment by section 6.02b.3(b)(ii)(aa) of NOAA Administrative order 216–6 as revised.

This final rule does not contain a collection-of-information requirement for purposes of the Paperwork Reduction Act.

This final rule does not contain policies with federalism implications sufficient to warrant preparation of a federalism assessment under E.O. 12612.

This rule does not directly affect the coastal zone of any state with an approved coastal zone management program.

List of Subjects in 50 CFR Part 216

Administrative practice and procedure, Imports, Indians, Marine mammals, Penalties, Reporting and recordkeeping requirements, Transportation.

Dated: December 7, 1993.

Nancy Foster,

Deputy Assistant Administrator for Fisheries, National Marine Fisheries Service.

For the reasons set out in the preamble, 50 CFR part 216 is amended as follows:

PART 216—TAKING AND IMPORTING OF MARINE MAMMALS

1. The authority citation for part 216 continues to read as follows:

Authority: 16 U.S.C. 1361 *et seq.*, unless otherwise noted.

2. In § 216.4, paragraphs (b)(1) through (h) are removed and paragraph (b) introductory text is revised to read as follows:

§ 216.4 Other laws and regulations.

* * * * *

(b) State laws or regulations. See part 403 of this chapter.

3. In part 216, §§ 216.110 through 216.113 (subpart I) are removed.

[FR Doc. 93–30346 Filed 12–10–93; 8:45 am]

BILLING CODE 3510–22–M

50 CFR Part 625

[Docket No. 921230–3020; I.D. 112693C]

Summer Flounder Fishery

AGENCY: National Marine Fisheries Service (NMFS), National Oceanic and Atmospheric Administration (NOAA), Commerce.

ACTION: Notification of commercial quota harvest.

SUMMARY: NMFS issues this notification to announce that the summer flounder commercial quotas available to the States of New Jersey and Maryland have been harvested. Vessels issued a Federal fisheries permit for the summer flounder fishery may no longer land summer flounder in the States of New Jersey or Maryland for the remainder of calendar year 1993. Regulations governing the Fishery Management Plan for the Summer Flounder Fishery (FMP) require publication of this notice to advise the States of New Jersey and Maryland that their quotas have been harvested and to advise vessel and dealer permit holders that no commercial quota is available for landing summer flounder in either State.

EFFECTIVE DATE: December 10, 1993 through December 31, 1993.

FOR FURTHER INFORMATION CONTACT: Hannah Goodale, 508–281–9101.

SUPPLEMENTARY INFORMATION: Regulations governing the FMP are found at 50 CFR part 625 (December 4, 1992, 57 FR 57358). The regulations require annual specification of a commercial quota that is apportioned among the coastal states from North Carolina through Maine. The process to set the annual commercial quota and the percent allocated to each state are described in § 625.20.

The commercial quota for summer flounder for the 1993 calendar year is set equal to 12.35 million pounds (5.6 million kg) (January 22, 1993, 58 FR 5658). The quota allocated to vessels landing summer flounder in New Jersey is currently 2,073,354 pounds (940,467 kg) (November 23, 1993; 58 FR 224); and 251,829 pound (114,228 kg) in Maryland.

Section 625.21(c) requires the Regional Director, Northeast Region, NMFS (Regional Director), to monitor state commercial quotas based on dealer reports and other available information, and to determine the date when a state commercial quota will be harvested. The Regional Director is further required to publish a notice in the **Federal Register** advising a state and notifying Federal vessel and dealer permit holders that, effective upon a specific date, the state's commercial quota has been harvested and no commercial quota is available for landing summer flounder in that state.

The Regional Director has determined, based on dealer reports and other available information, that the New Jersey and Maryland commercial quotas will be harvested by the effective date of this notification. The regulations at § 625.4(a)(3) provide that Federal permit holders agree as a condition of the permit not to land summer flounder in any state that the Regional Director has determined no longer has commercial quota available. Therefore, further landings in that state by Federally permitted vessels are prohibited for the remainder of the 1993 calendar year, unless a notification of additional quota availability is published in the **Federal Register.** Federally permitted dealers are advised that they may not purchase summer flounder from Federally permitted vessels that land in New Jersey or Maryland, for the remainder of the calendar year.

Classification

This action is required by 50 CFR part 625.

Authority: 16 U.S.C. 1801 *et seq.*

List of Subjects in 50 CFR Part 625

Fisheries, reporting and recordkeeping requirements.

Dated: December 7, 1993.

David S. Crestin,

Acting Director, Office of Fisheries Conservation and Management, National Marine Fisheries Service.

[FR Doc. 93–30307 Filed 12–10–93; 8:45 am]

BILLING CODE 3510–22–M

Proposed Rules

Federal Register
Vol. 58, No. 237
Monday, December 13, 1993

This section of the FEDERAL REGISTER contains notices to the public of the proposed issuance of rules and regulations. The purpose of these notices is to give interested persons an opportunity to participate in the rule making prior to the adoption of the final rules.

DEPARTMENT OF AGRICULTURE

Agricultural Marketing Service

7 CFR Part 1007

[DA-94-04]

Milk in the Georgia Marketing Area; Notice of Proposed Suspension of Certain Provisions of the Order

AGENCY: Agricultural Marketing Service, USDA.

ACTION: Proposed suspension of rule.

SUMMARY: This document invites written comments on a proposal to suspend for the months of July and August 1994 provisions of the Georgia Federal milk marketing order that provide for payments to producers on the basis of a base and excess payment plan.

DATES: Comments are due no later than January 12, 1994.

ADDRESSES: Comments (two copies) should be filed with the USDA/AMS/Dairy Division, Order Formulation Branch, Room 2968, South Building, P.O. Box 96456, Washington, DC 20090-6456.

FOR FURTHER INFORMATION CONTACT: Nicholas Memoli, Marketing Specialist, USDA/AMS/Dairy Division, Order Formulation Branch, Room 2968, South Building, P.O. Box 96456, Washington, DC 20090-6456, (202) 690-1932.

SUPPLEMENTARY INFORMATION: This notice of proposed suspension is issued pursuant to the provisions of the Agricultural Marketing Agreement Act of 1937, as amended (7 U.S.C. 601-674) (the Act).

The Regulatory Flexibility Act (5 U.S.C. 601-612) requires the Agency to examine the impact of a proposed rule on small entities. Pursuant to 5 U.S.C. 605(b), the Administrator of the Agricultural Marketing Service has certified that this proposed action would not have a significant economic impact on a substantial number of small entities. This action will encourage milk production during the months of July and August, which are months of declining milk production.

The Department is issuing this proposed rule in conformance with Executive Order 12866.

This proposed suspension has been reviewed under Executive Order 12778, Civil Justice Reform. This action is not intended to have a retroactive effect. If adopted, this proposed action will not preempt any state or local laws, regulations, or policies, unless they present an irreconcilable conflict with the rule.

The Agricultural Marketing Agreement Act provides that administrative proceedings must be exhausted before parties may file suit in court. Under § 608c(15)(A) of the Act, any handler subject to an order may file with the Secretary a petition stating that the order, any provisions of the order, or any obligation imposed in connection with the order is not in accordance with law and requesting a modification of the order or to be exempted from the order. A handler is afforded the opportunity for a hearing on the petition. After a hearing, the Secretary would rule on the petition. The Act provides that the district court of the United States in any district in which the handler is an inhabitant, or has its principal place of business, has jurisdiction in equity to review the Secretary's ruling on the petition, provided a bill in equity is filed not later than 20 days after the date of the entry of the ruling.

Notice is hereby given that, pursuant to the provisions of the Act, the suspension of the following provisions of the order regulating the handling of milk in the Georgia marketing area is being considered for the months of July and August 1994:

1. In § 1007.32, paragraph (a).
2. In § 1007.61 (a), the words "of September through January".
3. In § 1007.61, paragraph (b).

All persons who want to send written data, views or arguments about the proposed suspension should send two copies of them to the USDA/AMS/Dairy Division, Order Formulation Branch, Room 2968, South Building, P.O. Box 96456, Washington, DC 20090-6456, by the 30th day after publication of this notice in the **Federal Register**.

The comments that are sent will be made available for public inspection in the Dairy Division during normal business hours (7 CFR 1.27(b)).

Statement of Consideration

The proposed suspension would make inoperative the requirement that producers be paid on the basis of the base and excess plan for the months of July and August 1994. The proposal was submitted by Carolina/Virginia Milk Producers Association, Inc., Dairymen, Inc., and Southern Milk Sales, Inc. These cooperative associations have a substantial amount of milk pooled on the Georgia milk market. In support of their proposal, the cooperative associations state that the suspension is needed because in recent years milk in this area has been in short supply during July and August. Without the suspension, the cooperatives contend the market's base and excess plan would discourage production in those months. They further state that it is necessary to take this action well before the proposed suspension takes effect to address the desire of individual dairy farmers to have knowledge of the base payment period prior to any base purchases.

List of Subjects in 7 CFR Part 1007

Milk marketing orders.

The authority citation for 7 CFR part 1007 continues to read as follows:

Authority: Secs. 1-19, 48 Stat. 31, as amended; 7 U.S.C. 601-674.

Dated: December 7, 1993.

Lon Hatamiya,

Administrator.

[FR Doc. 93-30296 Filed 12-10-93; 8:45 am]

BILLING CODE 3410-02-P

DEPARTMENT OF THE TREASURY

Customs Service

19 CFR Parts 141 and 142

RIN 1515-AB21

Prefiling of Entry Documentation

AGENCY: U.S. Customs Service, Department of the Treasury.

ACTION: Notice of proposed rulemaking.

SUMMARY: This document proposes to amend the Customs Regulations to limit the privilege of prefiling entry documentation. The purpose of these proposals is twofold. The proposals are intended to eliminate a window of enforcement vulnerability which exists when selectivity results are released before shipments are loaded at the

foreign port of export. If adopted, the proposals also will provide incentive for carriers to automate.

DATES: Comments must be received on or before February 11, 1994.

ADDRESSES: Written comments (preferably in triplicate) may be addressed to the Regulations Branch, U.S. Customs Service, Franklin Court, 1301 Constitution Avenue NW., Washington, DC 20229 and may be inspected at Franklin Court, 1099 14th Street NW., Washington, DC.

FOR FURTHER INFORMATION CONTACT: Ernest Cunningham, Office of Inspection and Control, (202) 927–0167.

SUPPLEMENTARY INFORMATION:

Background

Generally, merchandise for which entry is required shall be entered by the consignee within 5 working days after the entry of the importing vessel or aircraft, report of the vehicle, or arrival at the port of destination in the case of merchandise transported in bond. After the merchandise is entered, Customs generally determines, after examining the entry documentation, whether the merchandise merits examination and whether to release the merchandise.

Pursuant to section 142.2(b), Customs Regulations (19 CFR 142.2(b)), Customs has permitted entry documentation to be submitted before the merchandise arrives within the limits of the port where the entry is to be made. This is called prefiling. In these cases, Customs reviews the submitted documentation and determines whether the merchandise is releasable even before the merchandise arrives. The merchandise is actually released at the time it arrives within the port limits. Currently any filer may prefile entries arriving on any carrier.

The advantage of prefiling is that before the merchandise actually arrives, the carrier is able, by receiving a provisional release by Customs, to make decisions on staging the cargo, and the importer is enabled to arrange for examination or release and further distribution of the merchandise.

On November 6, 1991, in a document published in the **Federal Register** (56 FR 56608), Customs announced in an Advance Notice of Proposed Rulemaking that it was considering amending the Customs Regulations to limit prefiling privileges to entries filed by entry filers who are participants in the Automated Broker Interface (ABI) and to entries filed by non-ABI entry filers for merchandise that is transported on carriers that are participants in the Automated Manifest System (AMS). The document further gave advance notice that if the proposal is adopted, within 6 months of its adoption, selectivity results (determination whether a general or intensive examination of merchandise is necessary) will be released prior to carriers' arrival only to entry filers whose merchandise is transported on carriers that are participants in AMS. This would mean, in effect, that while entry filers who are participants in ABI may continue to prefile, provisional releases will only be issued by Customs for merchandise transported on AMS carriers.

It should be noted that no regulatory change is necessary to implement Customs proposed action to release selectivity results prior to carriers' arrival only to entry filers whose merchandise is transported on carriers that are participants in AMS. It is solely within Customs enforcement discretion to determine when imported merchandise should be released.

The purposes of these actions would be to provide incentive for carriers to automate as well as to improve enforcement by eliminating a window of vulnerability which currently exists when selectivity results are released before shipments are loaded at the foreign port of export. In addition, limiting prefiling privileges to automated carriers and brokers would make Customs more efficient. There would be less keystroking, less manual tracking and less paper releases required.

The Advance Notice of Proposed Rulemaking solicited comments. Thirty-six letters were received, many of them setting forth similar comments. A discussion of the comments follows.

Discussion of Comments

Comment: Although Customs states that participation in AMS is voluntary, it is forcing carriers to automate.

Response: Participation in AMS is voluntary; however, Customs obviously would greatly prefer total participation. Customs has stated that its goal is to accept only electronically transmitted cargo manifests via AMS by 1996. While each carrier must determine on its own whether it wishes to participate, Customs will continue to provide incentives for automating. Customs is proceeding with a variety of statutory and regulatory changes that will provide the needed legal mechanisms for electronic data exchange and continues to develop incentives to encourage automation. Customs believes that limiting the privilege of prearrival notifications to those shipments carried by automated carriers is a legitimate tool to encourage automation.

Comment: Customs originally used the prefiling privilege as an incentive to get Customs brokers to invest in ABI. Taking away this privilege is unfair as ABI filers have no control over whether a carrier uses AMS.

Response: ABI brokers will still be able to prefile entries via ABI. This privilege is not being taken away. This proposal will limit prefiling of entry documentation to ABI entries and those non-ABI entries which are filed against shipments being carried by AMS carriers or Air AMS Express Consignment Module participants. Results of cargo selectivity processing will only be released before arrival when the shipment is reported in AMS. Although brokers may prefile entries electronically for shipments not reported in AMS, results will not be returned to the broker or carrier until the conveyance carrying the shipment has arrived. While Customs expects that this proposal will provide strong incentive for carrier automation, this proposal is also intended to eliminate a window of vulnerability which currently exists when selectivity results are released before shipments are loaded at the foreign port of export. Customs will provide selectivity results to the trade as soon as it is reasonably sure that the shipment cannot be manipulated. AMS enables Customs to do this prior to arrival due to the fact that manifest data is provided to Customs before the freight arrives. For non-AMS carriers, Customs first receives notice of the actual importation of a shipment when the paper manifest is presented to Customs after arrival. These timeframe differences are the primary reason why selectivity results will be delayed for shipments arriving on non-AMS carriers under this proposal.

Comment: Customs is proposing to create an administrative nightmare for itself and its constituency by having to distinguish merchandise that is entered by an ABI participant from that which is entered by a non-ABI participant and merchandise that is carried by an AMS carrier from that which is carried by a non-AMS carrier.

Response: Customs believes that the distinctions that are proposed for determining which entries may be prefiled can be implemented through programming changes, and that there would be no ensuing administrative nightmare. Further, if there is any disruption of administrative procedures caused by this proposal, the long-term benefits of automation will vastly outweigh the short-term costs of any disruption. Customs firmly believes that only through automation will Customs

be able to meet the reality of increased workload with static resources. Only through AMS will Customs efficiently and effectively be able to meet its mission of enforcing laws and regulations while facilitating the movement of cargo.

Comment: The 6 months notice proposed in the advance notice between when prefiling will be permitted for merchandise not carried on AMS participating carriers that is entered by ABI brokers and when selectivity results no longer will be released to ABI brokers when merchandise is carried on carriers that are not participants in AMS is not sufficient notice for carriers and importers to automate. Most firms will not make the required investment to automate until the rule is adopted. A 24-month postponement to develop effective air manifest options in software and more cost effective service centers is suggested.

Response: Customs believes that postponement would serve no purpose as one can always hope for more cost effective measures to be available in the future. By publishing an advance notice and a notice, Customs believes it is giving carriers and importers an adequate heads-up.

Comment: The cost of automation through direct interface and software packages is prohibitive. It is suggested that due to cost, carriers send their manifests to Customs or to a port authority for input for a fee.

Response: Customs has no control over the cost of automation. Cost is determined by the method of interface chosen by the participant. The cost of direct interface is determined in part by the level of automation of the participant. The cost of software packages is determined by the software vendors. It should be noted, however, that Customs is always looking for ways to encourage automation. Accordingly, Customs has developed alternate means of communications such as direct interface on a dedicated LU 6.2 protocol line, network interface on a dedicated LU 6.2 protocol line, direct interface on an LU 6.2 dial-up, and direct interface on a remote job entry dial-up. Also, along the lines of the suggestion that carries send manifests to Customs or port authorities for input for a fee, Customs does allow the use of service centers which permit users to share the costs of ACS/AMS interface. In addition, Customs is exploring the possibility of developing public use terminals for those carriers who do not automate or choose not to use a service center. Customs agrees that the cost of automation may appear high in the short term, but believes that in the long term, the costs will be worth it. To paraphrase an old adage, Customs believes that when considering the costs of automation, one should not be penny-wise and pound foolish.

Comment: If Customs desires to induce more carriers to participate in AMS, any proposal toward this end should confine its impact to the carriers, each of which bears ultimate responsibility for its decision to automate, and not to the release of the cargo, which affects the broker and the importer.

Response: If the importation process were clearly departmentalized, Customs would be able to create incentives for carriers to automate that would not affect other parties. However, in the real world, all aspects of the importation process are interrelated. If prefiling privileges were to continue to be granted to ABI brokers when merchandise is carried on carriers not participating in AMS, there would be little incentive for those carriers to automate. Customs ultimate goal is to encourage as much automation as possible in the import arena, and to offer incentives to parties whose entire transactions are automated.

Comment: The goal of Customs advance notice will not be achieved because the selection of a carrier will not be determined by whether or not the carrier is an AMS participant. The primary factors in determining what carrier to use is the freight forwarder chosen, the freight rate quoted, and the speed of delivery to the U.S.

Response: Customs is expecting that the advantages that derive from prefiling will encourage importers to include AMS participation in the equation when determining what carrier to use.

Comment: Customs should seek to add participants to its automated systems by making the programs attractive and not by punitive action. Incentives may be in order, but accepted practices, such as allowing prefiling for all, should not be changed.

Response: Any incentive that Customs develops to make a program attractive would ultimately give an advantage to one party over another; that is the nature of an incentive. Customs does not perceive its proposal as punitive; it perceives it as a method within its decision to encourage automation. As stated previously, prefiling is a privilege. Customs has been very generous in granting the privilege in the past and one could argue that the advantages of prefiling have been taken for granted by many entry filers. Customs has determined that its ability to grant or withhold prefiling privileges is a powerful incentive to encourage automation and that it is within Customs discretion, by following rulemaking procedure, to establish new criteria for the granting of the prefiling privilege.

Comment: A limited exception should be made to the advance notice to permit prefiling of import documents by importers of self-propelled aircraft and parts needed to support aircraft on the ground (AOG) even though such importations do not involve participation in AMS or ABI.

Response: It is not Customs goal to develop a rule with exceptions. Customs is proposing to allow prefiling privileges based on whether a conveyance is on AMS. Customs believes that it would be opening Pandora's box and would create an administrative nightmare if it were to recognize specific types of cargo as being exempt from its prefiling limitation.

Comment: The 4-hour deadline for AMS filing by all parties is a very strong deterrent for forwarders who would be required to staff offices at premium pay during nighttime hours to ensure that an AMS filing was timely for air freighter arrivals.

Response: This issue was raised by 15 commenters, which surprised Customs because there was no mention in the advance notice of any 4-hour deadline. In fact, there is no 4-hour deadline to supply or change manifest information. Customs can receive updated manifest data anytime prior to or after the arrival of a conveyance. If, however, there is updated information, Customs requires the information in a different format with the reason for the update given.

Comment: The proposal is inconsistent in its references to filing privileges. Customs alternately refers to ABI filers *and* AMS filers, ABI filers *or* AMS filers, and AMS filers *only* as being subject to the proposal.

Response: Eleven comments were received that noted this apparent inconsistency. Yet, upon rereading the advance notice or proposed rulemaking, we fail to see any reference to or use of the term "AMS filer." The advance notice and this notice discuss that those who will be entitled to prefile are entry filers who are participants in the Automated Broker Interface, regardless of whether the merchandise being entered is transported on a carrier which is a participant in AMS, and entry filers who file entries manually for merchandise which is being transported on carriers that are participants in AMS. If this proposal is adopted, within 6 months after its adoption, prefiling will still be permitted for both of these types of entry filers; however, selectivity results will be released prior to carriers'

arrival only to entry filers whose merchandise is transported on carriers that are participants in AMS.

Comment: The proposal should be modified to recognize that AMS transmissions through the Express Consignment Module of Air AMS will be accepted for purposes of prefiling entry documentation and obtaining express clearance status regardless of the AMS status of the actual carrier.

Response: Customs agrees. Customs does not intend to affect the express consignment module of Air AMS either through the proposed amendment or by withholding selectivity results until a carrier's arrival if there is an AMS transmission through the Express Consignment Module of Air AMS regarding that carrier. Express consignment facilities, pursuant to Part 128 of the Customs Regulations, may process and receive pre-arrival notifications regardless of whether the carrier is an AMS participant. Accordingly, this modification is referenced in the regulatory language that is proposed below.

Comment: If the proposal is adopted, it will delay cargo, disrupt carrier operations, and interfere with normal competition between carriers and ports. Further, the proposal would negatively impact bulk trade as well as many small general cargo carriers as agents of such carriers as bulk cargo and oil vessels do not have the resources in which to automate.

Response: Customs is aware that the proposal may disrupt the operations of non-automated carriers and entry filers who elect to use these carriers to transport their merchandise. However, after considering future workload increases and a presumably static workforce, Customs must make changes to its policy on the prefiling of entries. If Customs is to fully automate its cargo processing procedures by 1996, as stated in our 5-Year Plan, a change to the prefile policy is necessary. An important milestone in the achievement of our 5-Year Plan is the creation of the Automated Manifest System (AMS). As an incentive for carriers, deconsolidators, and freight forwarders to participate in AMS, changes to the privileges associated with prefiling entries are necessary.

Many entities (carriers, freight forwarders, port authorities, deconsolidators and service centers) involved in the movements of international cargo have realized the benefits of AMS participation. Some of these benefits are: Faster release of low-risk shipments; the ability to file or amend manifest or waybill data electronically; standardized billing, accounting, delivery and traffic control information; receipt of exam notifications; confidentiality of data; and reduced paper costs. Customs charges no fee for participation in AMS and assistance is provided during development by a Customs representative.

The costs incurred for developing or purchasing software and hardware are the AMS participant's responsibility. However, these costs can be lessened for bulk and small general cargo carriers by purchasing existing approved systems or by using a service center or port authority to provide the automated interface. To further minimize communication costs Customs offers a direct (800 number) dial-up access feature, available to both air and sea users.

Comment: It is necessary for Customs to fine-tune the AMS system before Customs makes more demand on the industry to enlist in the program. There is an expense that all of industry should not have to bear until the system is substantially developed to a more effective and stable level, leaving only limited adjustments. As evidence of how inadequate Air AMS is operationally, it is pointed out that the Air AMS module is not currently being used except by a few carriers in two locations, JFK and LAX Airports.

Response: Customs disagrees with this comment. AMS has developed into an effective and stable automated tool. As with any automated system, we strive to constantly improve it, and at times changes are made to better serve the importing community.

However, these changes are minor and are not disruptive to the daily operations of its users. Proof of the system's effectiveness is evidenced by the fact that approximately 65 percent of all ocean bills are transmitted in AMS by nearly 80 carriers. The system's effectiveness is further evidenced by the fact that several participants in AMS have voluntarily spoken before Customs-sponsored trade seminars and meetings to expound the benefits of the system.

The commenter is incorrect regarding the usage of Air AMS. As of July 1, 1993, Air AMS is currently operational at 17 locations: JFK, Anchorage, Chicago, St. Louis, Miami, Los Angeles, Washington, DC, San Francisco, Boston, Philadelphia, Atlanta, Louisville, Charlotte, Newark, Honolulu, Memphis and Seattle. Twenty-one air carriers are currently participating in AMS. Additionally, a total of 20 freight forwarders and deconsolidators are participating. Several others are testing data transmissions. When completed, they will come on line. Air AMS currently processes over 65,000 shipments per week, including more than half of all shipments that pass through JFK International Airport in New York, one of Customs largest ports.

Comment: A carrier should not be required to test and qualify at each new port of entry. This practice increases the carriers' cost and somewhat discourages them from participating in the AMS program.

Response: There was no mention in the advance notice of any such requirement and, in fact, an AMS carrier is not required to test at each new port.

Comment: Customs has not worked out such air manifest issues as split shipments and house and sub-house bill numbers in addition to master bill numbers.

Response: Customs disagrees with this comment. Customs, in its design of Air AMS, specifically adopted and built in measures to account for the handling of split shipments and house and sub-house bill numbers. These issues pose no problem in the processing of Air AMS shipments.

Comment: Customs should not require an AMS participant to have all flights that arrive within a particular port be reported through AMS.

Response: There are two reasons for requiring that all shipments of an AMS carrier within an automated port be included. First, having only part of the shipments in AMS causes an administrative burden on Customs field personnel in determining whether AMS or paper processing is needed. Second, the shell record notifications currently sent to ABI brokers would be rendered useless as a problem resolution tool since a shell record would be created for every bill not part of AMS.

Comment: This proposal is an attempt by Customs to cover up past mistakes in the administration of AMS by forcing carriers to participate in the program.

Response: While Customs is the first to admit that it is not infallible, this proposal stems from our attempts to rectify a legitimate enforcement concern and to implement the Customs Five Year Plan drafted in 1991, which attempts to achieve an almost totally electronic exchange of information. Our goal is to protect the integrity of Customs processing while encouraging those parties in the import process to automate.

Comments

Before adopting this proposal, consideration will be given to any written comments (preferably in triplicate) that are timely submitted to Customs. Comments submitted will be

available for public inspection in accordance with the Freedom of Information Act (5 U.S.C. 552), section 1.4, Treasury Department Regulations (31 CFR 1.4), and section 103.11(b), Customs Regulations (19 CFR 103.11(b)), on regular business days between the hours of 9 a.m. and 4:30 p.m. at the Regulations Branch, U.S. Customs, Franklin Court, suite 4000, 1099 14th Street NW., Washington, DC.

Executive Order 12866

This document does not meet the criteria for a "significant regulatory action" as specified in E.O. 12866.

Regulatory Flexibility Analysis

For the reasons set forth in the preamble, pursuant to the provisions of the Regulatory Flexibility Act (5 U.S.C. 601 *et seq.*), it is certified that the proposed amendment will not have a significant economic impact on a substantial number of small entities. Accordingly, it is not subject to the regulatory analysis or other requirements of 5 U.S.C. 603 and 604.

Drafting Information

The principal author of this document was Harold M. Singer, Regulations Branch, U.S. Customs Service. However, personnel from other offices participated in its development.

List of Subjects in 19 CFR Parts 141 and 142

Customs duties and inspection, Imports, Reporting and recordkeeping requirements.

Proposed Amendments

It is proposed to amend parts 141 and 142, Customs Regulations (19 CFR parts 141, 142) as set forth below:

PART 141—ENTRY OF MERCHANDISE

1. The general authority citation for part 141 and the specific authority citation for § 141.68 continue to read as follows:

Authority: 19 U.S.C. 66, 1448, 1484, 1624.

* * * * *

§ 141.68 also issued under 19 U.S.C. 1315;

* * * * *

2. It is proposed to amend § 141.68(a)(3) to read as follows:

§ 141.68 Time of entry.

(a) *When entry documentation is filed without entry summary.* * * *

(3) The time the merchandise arrives within the port limits, if the entry documentation is submitted before arrival in accordance with § 142.2(b)(1) of this chapter, and if requested by the importer on the entry documentation at the time of submission.

* * * * *

PART 142—ENTRY PROCESS

1. The authority citation for part 142, Customs Regulations (19 CFR part 142) continues to read as follows:

Authority: 19 U.S.C. 66, 1448, 1484, 1624.

2. It is proposed to amend § 142.2(b)(1) to read as follows:

§ 142.2 Time for filing entry.

* * * * *

(b) *Before arrival of merchandise—*

(1) *Entry.* The time of entry shall be the time specified in § 141.68(a) if entry documentation required by § 142.3(a) is submitted before the merchandise arrives within the limits of the port where entry is to be made. Entry documentation may be so submitted only if:

(i) Entry documentation is submitted electronically through the Automated Broker Interface; or

(ii) The merchandise for which the entry documentation is being filed, whether the documentation is filed through the Automated Broker Interface or manually, is transported by a carrier that participates in the Automated Manifest System; or

(iii) Regardless of whether the carrier transporting the merchandise for which the entry documentation is filed is an AMS participant, there is an AMS transmission through the Express Consignment Module of Air AMS regarding that carrier.

* * * * *

Samuel H. Banks,

Acting Commissioner of Customs.

Approved: December 7, 1993.

John P. Simpson,

Deputy Assistant Secretary of the Treasury.

[FR Doc. 93-30292 Filed 12-10-93; 8:45 am]

BILLING CODE 4820-02-P

DEPARTMENT OF HEALTH AND HUMAN SERVICES

Food and Drug Administration

21 CFR Parts 5, 25, 170, 171, and 174

[Docket No. 92N-0181]

RIN 0905-AD86

Food Additives; Threshold of Regulation for Substances Used in Food-Contact Articles; Extension of Comment Period

AGENCY: Food and Drug Administration, HHS.

ACTION: Proposed rule; extension of comment period.

SUMMARY: The Food and Drug Administration (FDA) is extending to February 11, 1994 the comment period for the proposed rule published in the **Federal Register** of October 12, 1993 (58 FR 52719). The document proposed to establish a process for determining when the likelihood or extent of migration to food of a substance used in food-contact articles is so trivial as not to require regulation of the substance as a food additive. The closing date for submission of comments was December 13, 1993. FDA is taking this action in response to a request for additional time for public comment.

DATES: Written comments by February 11, 1994.

ADDRESSES: Submit written comments to the Dockets Management Branch, (HFA-305), Food and Drug Administration, rm. 1-23, 12420 Parklawn Dr., Rockville, MD 20857.

FOR FURTHER INFORMATION CONTACT: Edward J. Machuga, Center for Food Safety and Applied Nutrition (HFS-216), Food and Drug Administration, 200 C St. SW., Washington, DC 20204, 202-254-9511.

SUPPLEMENTARY INFORMATION: In the **Federal Register** of October 12, 1993 (58 FR 52719), FDA published a proposed rule that would establish a threshold of regulation for substances used in food-contact articles. Interested persons were given until December 13, 1993, to comment on the proposal.

The agency has received a request to extend the comment period to permit an additional 60 days for public comment. The request stated that the complexity of the proposed regulation and the effect on future approvals of food-contact materials clearly require that additional time be provided for the submission of comments. After careful consideration, the agency has concluded that it is in the public interest to allow additional time for interested persons to submit comments on the proposed rule. Accordingly, the agency is extending the comment period until February 11, 1994.

Interested persons may, on or before February 11, 1994, submit to the Dockets Management Branch (address above) written comments regarding the proposal. Two copies of any comments are to be submitted, except that individuals may submit one copy. Comments are to be identified with the docket number found in brackets in the heading of this document. Received comments may be seen in the office

above between 9 a.m. and 4 p.m., Monday through Friday.

Dated: December 8, 1993.

Michael R. Taylor,

Deputy Commissioner for Policy.

[FR Doc. 93–30426 Filed 12–9–93; 11:03 am]

BILLING CODE 4160–01–F

DEPARTMENT OF TRANSPORTATION

Coast Guard

33 CFR Part 110

[CGD 09–93–033]

Special Anchorage Area, Lake Superior, La Pointe Harbor, Madeline Island, WI

AGENCY: Coast Guard, DOT.

ACTION: Notice of proposed rulemaking.

SUMMARY: The Coast Guard is considering a proposal to establish a Special Anchorage Area on Lake Superior, La Pointe Harbor, Madeline Island, Wisconsin. Several boats already use this area for permanent anchorage. Use of the area for anchorage has been growing steadily over the years and it has become apparent there is a significant public need for this Special Anchorage Area. The intended effect of this Special Anchorage Area is to reduce risk of vessel collisions within the designated area.

DATES: Comments must be received on or before January 27, 1994.

ADDRESSES: Comments and supporting materials should be mailed or delivered to Commander (oan), Ninth Coast Guard District, 1240 East 9th Street, Cleveland, Ohio 44199–2060. Comments and materials received will be available for public inspection at the above location from 8 a.m. to 4 p.m. Monday through Friday, except holidays.

FOR FURTHER INFORMATION CONTACT: Lieutenant Junior Grade Scott J. Smith, Coast Guard, Aids to Navigation Branch and Waterways Management Branch, Ninth Coast Guard District, room 2083, 1240 East Ninth Street, Cleveland, Ohio, 44199–2060, (216) 522–3990.

SUPPLEMENTARY INFORMATION: Interested persons are invited to participate in this proposed rulemaking by submitting written views, data or arguments to the office listed under **ADDRESSES** in this preamble. Commenters should include their names and addresses, identify the docket number for the regulations (CGD 09–93–033), the specific section of the proposal to which their comments apply, and give reasons for each comment. Receipt of comments will be acknowledged if a stamped, self-addressed postcard or envelope is enclosed. The regulations may be changed in light of comments received. All comments received before the expiration of the comment period will be considered before final action is taken on this proposal. No public hearing is planned, but one may be held if written requests for a hearing are received and it is determined that the opportunity to make oral presentations will aid the rulemaking process.

Drafting Information

The drafters of this regulation are Captain Roderick A. Schultz, U.S. Coast Guard, project officer, Chief, Ninth Coast Guard District Aids to Navigation Branch & Waterways Management Branch, and Lieutenant Karen E. Lloyd, U.S. Coast Guard, project attorney, Ninth Coast Guard District Legal Office.

Discussion of Proposed Regulations

A "special anchorage area" is an area on the water in which vessels less than 20 meters (approximately 65 feet, 7.4 inches) in length are allowed to anchor without displaying the navigation lights which are otherwise required for anchored vessels under Rule 30 of the Inland Navigational Rules, codified at 33 U.S.C. 2030. The Coast Guard is considering a proposal to establish a Special Anchorage Area on Lake Superior, La Pointe Harbor, Madeline Island, Wisconsin. This Special Anchorage Area would be established from the Madeline Island Marina North Entrance Light (LLNR 15445) northwest to latitude 46°46.6′ N., longitude 090°47.2′ W., thence north to a point on the shoreline at latitude 46°46.7′ N., longitude 090°47.2′ W., thence southeast along the shoreline and structures to the point of origin.

Federalism Implications

This action has been analyzed in accordance with the principles and criteria contained in Executive Order 12612, and it has been determined that the rulemaking does not have sufficient federalism implications to warrant the preparation of a Federalism Assessment. These regulations do not impose any new regulatory requirements in an area not heretofore regulated by the Federal Government, and do not impose any requirements or restrictions on State or local authorities.

Environment

The Coast Guard has considered the environmental impact of these regulations and concluded that, under section 2.B.2.c of Coast Guard Commandant Instruction M16475.1B, they are categorically excluded from further environmental documentation.

Economic Assessment and Certification

This proposal is not considered a significant regulatory action under Executive Order 12866 and is not significant under Department of Transportation regulatory policies and procedures (44 FR 11034 of February 26, 1979). The impact of these regulations is expected to be minimal, and the Coast Guard therefore certifies that, if adopted, they will not have a significant economic impact on a substantial number of small entities under the Regulatory Flexibility Act, 5 U.S.C. 601 *et seq.*

Collection of Information

These regulations will impose no collection of information requirements under the Paperwork Reduction Act, 44 U.S.C. 3501 *et seq.*

List of Subjects in 33 CFR Part 110

Anchorage grounds.

Proposed Regulations

In consideration of the foregoing, the Coast Guard Proposes to amend part 110 of title 33, Code of Federal Regulations, as follows:

PART 110—[AMENDED]

1. The authority citation for part 110 continues to read as follows:

Authority: 33 U.S.C. 471, 2030, 2035 and 2071; 49 CFR 1.46 and 33 GFR 1.05–1(g). Section 110.1a and each section listed in 110.1a are also issued under 33 U.S.C. 1223 and 1231.

2. In part 110, a new § 110.77b is added to read as follows:

§ 110.77b Madeline Island, WI

The water area in La Pointe Harbor, Madeline Island, Wisconsin, enclosed by:

Latitude	Longitude
46°46.3′ N.	090°47.1′ W, to
46°46.6′ N.	090°47.2′ W, to
46°46.7′ N.	090°47.2′ W, thence along the natural shoreline and structures to:
46°46.3′ N.	090°47.1′ W.

Dated: November 29, 1993.

Rudy K. Peschel,

Read Admiral, U.S. Coast Guard, Commander, Ninth Coast Guard District.

[FR Doc. 93–30384 Filed 12–10–93; 8:45 am]

BILLING CODE 4910–14–M

DEPARTMENT OF THE INTERIOR

National Park Service

36 CFR Part 6

RIN 1024–AB95

Solid Waste Disposal Sites in Units of the National Park System

AGENCY: National Park Service, Interior.

ACTION: Proposed rule.

SUMMARY: The National Park Service (NPS) proposes to restrict, in accordance with Public Law 98–506, the creation of new solid waste disposal sites in units of the National Park System and control the operations of such sites, in existence as of September 1, 1984, so as to minimize adverse effects to the environment and visitor enjoyment in units of the National Park System. In that Act, the Congress directed the Secretary of the Interior to promulgate implementing regulations that prohibit establishing solid waste disposal sites within the boundaries of units of the National Park System except under very narrow circumstances.

DATES: Comments must be filed on or before February 11, 1994

ADDRESSES: All comments should be addressed to National Park Service, Engineering and Safety Services Division, Mail Stop 2431, Washington, D.C. 20240.

FOR FURTHER INFORMATION CONTACT: Frank Buono, Box 477, Grand Canyon, Arizona 86023, (602) 638–2691; or John Donahue, Environmental Quality Division, P.O. Box 37127, Washington, D.C. 20013–7127, (202) 208–3163.

SUPPLEMENTARY INFORMATION:

Background

In 1984, the Congress enacted legislation, Public Law 98–506 (98 stat. 2338) codified at 16 U.S.C. 460*l*–22(c) (the Act), to prohibit the operation of "solid waste disposal sites" within units of the National Park System except for those "operating as of September 1, 1984," or those "used only for disposal of wastes generated within that unit so long as such site will not degrade any of the natural or cultural resources" of the unit. The Act went on to direct the Secretary of the Interior to promulgate regulations to "carry out the provisions of this subsection, including reasonable regulations to mitigate the adverse effects of solid waste disposal sites in operation as of September 1, 1984, upon the property of the United States." The proposed regulations are intended to implement those statutory provisions.

On September 11, 1984, the United States House of Representatives Subcommittee on Public Lands and National Parks conducted a hearing on solid waste disposal sites in National Park System units. The hearing examined the issue of three prominent commercial waste disposal sites then operating in units of the National Park System: At Gateway National Recreation Area, Gettysburg National Military Park, and Cape Cod National Seashore. The sites existed as a consequence of reservations of use rights or under permits granted by the National Park Service. The Subcommittee also examined proposals to establish new waste disposal sites in other units, including the Cuyahoga Valley National Recreation Area. Since the enactment of the statute, the site at Gateway is no longer in use for solid waste disposal. However, the Service has since become aware of other solid waste disposal sites within unit boundaries in Alaska and in Santa Monica Mountains National Recreation Area. The most prominent solid waste disposal site in the System today is at Calabasas, California. Proposals to establish new solid waste disposal sites in Cuyahoga Valley and Santa Monica Mountains National Recreation Areas continue to surface.

Section-by-Section Analysis

Section 6.1 Purpose

The purpose of these regulations is to implement Public Law 98–506, 98 stat. 2338 regarding the operation of solid waste disposal sites within the boundaries of any unit of the National Park System.

Section 6.2 Applicability and Scope

The proposed regulations are applicable to any solid waste disposal site operated in, or proposed for operation in, units of the National Park System. The States, under the overall aegis of the United States Environmental Protection Agency (EPA), are the primary regulatory authorities for solid waste disposal sites. This proposed rule was conceived with the specific intention of supplementing, not supplanting, the existing regulatory controls for solid waste disposal sites in units of the National Park System.

The NPS is concerned with the disposal of all solid wastes on all lands and waters within unit boundaries. It does not, however, propose that all persons who either reside or farm within the exterior boundaries of a National Park System unit submit a request and obtain a permit from the National Park Service for the disposal of residential or agricultural wastes on their lands. Paragraph (c) provides that a person residing within the boundaries of a unit of the National Park System, who has no practicable alternative for the disposal of residential or agricultural solid wastes, may dispose of certain solid wastes without a permit or penalty, unless a State or local permit or license is required for the disposal of solid waste. The proposed rule enumerates conditions under which such persons may dispose of waste. This exemption does not apply to the disposal of agricultural pesticides, pesticide equipment or containers.

This proposed exception is intended to minimize the solid waste stream by providing an alternative disposal means for agricultural or residential solid wastes that are compostible.

If the Superintendent of the affected unit determines that the disposal of agricultural or residential solid wastes poses a reasonable probability of threat to public health or the environment, as described in the regulations at 40 CFR part 257, the Superintendent will notify the Regional Director and the resident that the request, permit, and penalty provisions of part 6 would be applicable.

Paragraph 6.2(d) explains the effect of the proposed regulations on NPS operated sites. Existing and new solid waste disposal sites operated or proposed by the NPS for administration of the National Park System, must meet the standards prescribed in 40 CFR, Subpart I, specifically at 40 CFR part 241, Guidelines for the Land Disposal of Solid Waste; part 257, Criteria for Classification of Solid Waste Disposal Facilities and Practices, and part 258 Criteria for Municipal Solid Waste Landfills, and by appropriate State laws. The procedural, administrative, financial assurance and penalty provisions of the proposed regulations do not apply to NPS operated landfills. However, the NPS will adhere to the conditions of § 6.4 to establish a new, or expand an existing, solid waste disposal site for NPS activities. The NPS will also adhere to the conditions of § 6.5 to continue operations at existing NPS operated solid waste disposal sites. In addition, the NPS will comply with the National Environmental Policy Act (42 U.S.C. 4321, et seq.) and, at a minimum, prepare an environmental assessment for any new, or expansion of any existing, solid waste disposal site that the NPS proposes.

Section 6.3 Definitions

The definitions section of the proposed rule applies to terms that are not otherwise defined in 36 CFR part 1. The terms defined in the proposed rule either come from the legislation on which the rule is based or are included

to enhance the clarity and accuracy of the rule. The primary purposes of the definitions are to make clear the reach and applicability of the proposed rule for the NPS and the regulated community and to ensure that actions taken under the rule are consistent and predictable. In most cases, other statutes serve as the bases for the precise wording selected. These statutes are referred to in the discussions of the definitions.

The term "boundaries of any unit of the National Park System" comes from the language of the statute. It is defined in the proposed rule to include all lands within units of the National Park System, regardless of jurisdictional status or ownership. Many units of the National Park System include non-federal lands and, under the proposed rule, solid waste disposal on both federal and non-federal lands within National Park System unit boundaries would come under the purview of this rule.

Because there are no limitations on applicability to any class or type of lands in the statutory language, the proposed rule defines the term broadly. The proposed definition includes waters as well as lands because of the breadth of the statutory language and because the effects of such solid waste disposal sites are not limited to lands, but can also affect waters, particularly groundwater.

Also defined is the term "National Park Service activities." It is explained for two reasons: First, to clarify the fact that there must be a necessary connection between the NPS and the establishment of solid waste disposal sites after the passage of the Act. Second, because beginning one year after the effective date of the regulations, only persons engaged in "National Park Service activities," as defined herein, may dispose of solid waste in an NPS operated solid waste disposal site. "National Park Service activities" thus includes activities conducted by NPS contractors, concessionaires, and commercial use licensees. Such persons, under agreement with the NPS, provide eating, lodging, transportation, and other services to park visitors. Since new solid waste disposal sites may be established in National Park System units for NPS activities only, such sites may accept for disposal waste generated by these persons. NPS contractors, concessionaires and commercial use licensees may also dispose of solid waste in existing NPS operated sites. "National Park Service activities" do not include activities engaged in by Special Use Permittees (Form 10–114). Waste disposal by Special Use Permittees is governed by all the substantive, procedural, financial assurance, and penalty provisions of proposed section § 6.4 for a new waste disposal site, or § 6.5 for an existing site. Nor may such persons dispose of solid waste in an NPS operated site beginning one year after the effective date of the regulations under proposed § 6.8(a).

The term "degrade" also comes from the statute and is defined as "to lessen in quantity, quality, or value." It is included in the terms defined in the proposed rule for the sake of clarity and predictability. Since the statutorily mandated standard for any solid waste disposal site operating in a park unit is that the operation not "degrade" park resources, this section provides guidance as to how the term degrade is to be used by the NPS in determining such effects.

The terms "agricultural solid waste," "residential solid waste," and "leachate" are defined as they are in the regulations that govern solid waste under the authority of the Resource Conservation and Recovery Act (42 U.S.C. 6901 *et seq.*) (RCRA) and implemented at 40 CFR part 243, Guidelines for the Storage and Collection of Residential, Commercial, and Institutional Solid Waste.

The term "hazardous waste" refers to the definition of such solid waste prescribed at 40 CFR Part 261, Identification and Listing of Hazardous Wastes.

"Natural resources" is defined here so as to provide a comprehensive inventory of the inherent attributes of National Park System units that may be affected by solid waste disposal sites. The detailed listing of resource attributes is designed to enable the agency and the regulated community sufficient consistency and specificity to evaluate potential effects to the parks. The Report of the House Committee on Interior and Insular Affairs (House Report 98–1069) that accompanied the Act said, "the conditions of noise, air pollution, waste disposal in surrounding lands, rat and other pest problems, and area disruption due to heavy truck use that are created by these waste disposal sites have resulted in a deep concern over the degradation of park values." In another section, the Report stated, "[t]he Committee notes that the operation of solid waste disposal sites within units of the National Park System causes deterioration of air and water quality, increases levels of mechanical noise, and has the potential to degrade land and water areas that are in relatively natural condition and areas containing significant cultural values, and that the operation of such disposal sites renders adjacent lands, and waters, unfit for full public use and enjoyment." In light of the Committee's broad findings concerning what may constitute natural resources affected by solid waste disposal sites, the drafters have chosen to provide a broad definition for this term.

The definition of the term "National Park System" mirrors the statutory language of 16 U.S.C. 1c. The purpose of including it here is that the term is used in the statute. Defining it in the proposed rule clarifies the applicability of the rule.

The definitions of the terms "PCBs and PCB items" and "post closure care" are the same as used by EPA. The terms "PCBs and PCB items" are defined by regulations at 40 CFR part 761, Polychlorinated Biphenyls (PCBs) Manufacturing, Distribution in Commerce, And Use Prohibitions. The terms "closure" and "post closure care" are described at 40 CFR part 258.

At the heart of this regulatory package are the management and control of "solid waste." The National Park Service defines the term substantially similar to that used in RCRA regulations at 40 CFR part 241. The broad definition of solid waste included here is intended to ensure that all potential sources of adverse effects to National Park System units from such sources come under the regulatory purview of the proposed rule. The proposed rule also defines two classes of solid waste—agricultural and residential—that may be exempt from the rule under clearly delineated circumstances. The proposed regulations do not govern solid waste transfer stations, recycling centers, sewage treatment plants, or septic systems.

Because the statute severely restricts the establishment of new "(solid waste) disposal sites" within units of the National Park System and because the term is central to any regulatory activities under the framework of the statute, it is defined in the proposed rule. The proposed definition is based on the statutory language in RCRA for the term "disposal." The definition explicitly states that such sites include land or waters where such solid waste may be placed.

Section 6.4 Solid Waste Disposal Sites Not in Operation on September 1, 1984

The proposed regulation permits establishing new solid waste disposal sites after September 1, 1984, within units of the National Park System, only with the approval of the Regional Director. This section does not apply to

solid waste disposal sites in operation on September 1, 1984.

The Regional Director may approve a request for a permit for a new solid waste disposal site only if an applicant can show that it meets the stringent conditions outlined in the proposed rule that are derived from the statute. The Act states that any new sites must be "* * * used only for disposal of wastes generated within that unit of the park system * * *" This is the basis for the first approval condition. The drafters have included the phrase "solely from National Park Service activities" in recognition of the fact that the Congress acknowledged that the National Park Service might need to operate solid waste disposal sites for its own management and associated activities. The drafters believe that the statutory language "wastes generated within that unit of the park system" was meant to convey a nexus between the disposal sites and activities of the NPS.

The second condition requires that there be no reasonable alternative for disposal outside the unit boundaries.

The third condition also is directly derived from the statute, which says "* * * so long as such site will not degrade any of the natural and cultural resources of such park unit." The operator must show that the site will not degrade park resources.

The fourth and fifth conditions ensure consistency and compliance with other Federal, State, and local regulatory programs.

The sixth condition, that hazardous wastes may not be stored, handled, or disposed of within NPS units, recognizes the unique resource values protected in the National Park System and the fundamental incompatibility of the placement of hazardous wastes with protecting those resources. Note that the EPA's definition of hazardous waste at 40 CFR part 261 excludes wastes generated by households (including single and multiple residences, hotels, and motels). Thus, the sixth condition does not restrict disposal of household wastes in NPS operated or other solid waste disposal sites in National Park System units. However, to minimize the amount of paints, solvents, cleaning agents, pesticides, and related materials disposed of in household waste, the regulations at section 6.8(b) direct the NPS to conduct special collection programs under which householders could dispose of such materials separately rather than discard them with other solid wastes.

The seventh condition, that such sites be located wholly on nonfederal lands, implements the policy of the National Park Service articulated in its *Management Policies* (1988), page 9:6. As a consequence, no such sites may be established or expanded on Federal lands within the boundaries of a unit.

The eighth condition implements Executive Orders 11988 and 11990. The ninth and tenth conditions seek to clearly specify precise categories of facilities and lands where solid waste disposal sites would be incompatible with NPS management and visitor enjoyment. The eleventh condition limits the size of such sites, and the twelfth condition seeks to ensure that such sites will not degrade park resources and visitor enjoyment at a future date.

The request for a permit forms the basis for the Regional Director's evaluation of whether the conditions for approval listed above may be met. The Act states that its general purpose is to "protect the air, land, water, natural and cultural values of the National Park System and the property of the United States therein." Section 6.4(b) of the proposed rule specifies the minimum amount of information necessary, in the professional judgment of the NPS, to evaluate whether the air, land, water, and cultural and natural resources of the National Park System can be protected if a proposed operation is permitted. The NPS welcomes any suggestions for additional information requirements or for streamlining the application process while assuring protection of park resources and values.

Finally, § 6.4(c) requires that the Regional Director reject the request if the conditions for approval detailed in paragraph (a) are not met. This section also requires that the Regional Director notify the requester of the rejection and the reasons for the rejection.

Section 6.5 Solid Waste Disposal Sites in Operation on September 1, 1984

The NPS believes that solid waste disposal sites are not an appropriate use of lands within National Park System unit boundaries. The long-term intent of the National Park Service is to eliminate, to the extent possible, such sites from within unit boundaries. In the interim, the requirements of § 6.5 are designed to insure that any solid waste disposal sites in operation on September 1, 1984 in units of the National Park System and continuously operated since that time meet minimum standards for operation and do not degrade park resources and values. An operator must submit a request for a permit to operate within 180 days of the effective date of these regulations. The information outlined in § 6.4 is required of such operations, except that there is no requirement that the waste be generated solely from NPS activities.

The conditions of approval for existing disposal sites differ from those in § 6.4 in recognition of the fact that sites in operation may not be able to meet the more stringent tests required of new sites. The approval conditions in this section are designed to implement the section of the Act that requires the Secretary to promulgate regulations "to mitigate the adverse effects of solid waste disposal sites in operation as of September 1, 1984 upon property of the United States." As a result of the statutory language, the first condition requires that there be adequate mitigation of adverse effects from the operation of the disposal site. The second condition requires compliance with all applicable Federal, State, and local laws and regulations. This section, like § 6.4, requires that there be no hazardous waste disposal at any such sites because such activities are incompatible with the values and purpose of the National Park System and each unit thereof.

Several solid waste disposal sites are currently operated by nonfederal parties in units of the National Park System. Most are on nonfederal lands within the unit boundaries, while others are on Federal lands within the units. The sites on Federal lands often exist because of agreements made as conditions to Federal acquisition of specific tracts of land. The regulations will not terminate any existing agreements that are in compliance with applicable local, State, and Federal laws.

Proposed § 6.5(c) prescribes the conditions under which the Regional Director may allow existing solid waste disposal sites to continue operations. However, the NPS intends that existing solid waste disposal sites operated by nonfederal parties will not operate indefinitely. Under proposed § 6.5(d), a site that reaches its capacity may continue operation only if the site meets the more stringent conditions applicable to new sites at § 6.4(a). For the purposes of these regulations, the capacity of a solid waste disposal site is that area, volume, or height prescribed in the State-issued permit or other instrument in existence as of September 1, 1984. Any proposal to extend the capacity of an existing solid waste disposal site beyond that specified in the permit will be treated as a proposal for a new solid waste disposal site. Such a proposal is subject to the approval conditions proposed in § 6.4.

It is conceivable that communities that lie wholly within the boundaries of a unit of the National Park System may exhaust the capacity of their existing

solid waste disposal sites and have no practical alternative for disposing of solid waste. Section 6.5(e)(2) provides that such communities may request that the Regional Director permit them to establish a new or expand an existing site within the unit. The Regional Director can evaluate the request under the conditions set out in § 6.5(c) if the operator can show that due to the isolated location of the solid waste disposal site there is no road, rail, or adequate water access available to any lands outside of the boundaries of the unit for solid waste disposal.

Section 6.6 Solid Waste Disposal Sites Within New Additions to the National Park System

This section is included in the proposed rule in recognition of the fact that solid waste disposal sites, either on Federal or nonfederal lands, may, by necessity, be added to the National Park System through addition of new units or the expansion of existing units. Consistent with the Management Policies that state that solid waste disposal sites are not compatible with the purpose of the National Park System and the intent of Congress to eliminate solid waste disposal sites from the National Park System in the future, the NPS will halt operations of such sites within one year of the establishment of a new or expansion of an existing park unit.

Unlike other provisions of the proposed regulations, paragraph (a) of this section applies only to lands and waters within the boundaries of units of the National Park System that are federally owned and/or administered. For any sites on nonfederally owned lands or waters within the boundaries, paragraph (b) directs the NPS to apply the conditions of proposed § 6.5(c). An operator wishing to continue solid waste disposal must request a permit within 180 days of the land's or water's designation as lying within the boundaries of a National Park System unit, rather than within 180 days of the effective date of these regulations, as required by § 6.5(a).

Section 6.7 Mining Wastes

This section is intended to clarify the relationship between the proposed regulations governing solid waste disposal and existing regulations at 36 CFR part 9, Minerals Management, that govern mineral operations. Without this section, the proposed regulations would govern solid waste disposal sites by all mineral operators. The NPS now regulates solid waste disposal by many mineral operators and does not intend to create a duplicate regulatory scheme for such operators. Thus, this section excludes from the permit and financial assurance provisions of the proposed regulations solid waste disposal sites by operators governed by NPS regulations at 36 CFR part 9 or by the terms of a Federal mineral lease.

The proposed regulations govern solid waste disposal by mineral operators to mitigate the adverse effects to unit resources that may result from existing, non-NPS regulated solid waste disposal sites in connection with mineral operations.

The proposed regulations allow new solid waste disposal sites by mineral operators within a unit only under the conditions that Congress prescribed at 16 U.S.C. 460*l*–22(c).

Proposed § 6.7(b) and (c) address solid waste disposal by persons conducting mineral operations on the date these regulations become effective. Proposed § 6.7(b) addresses existing mineral operations within a unit of the National Park System that are not governed by an NPS-approved Part 9 plan of operations or terms of a Federal mineral lease. Such a person may continue to operate a solid waste disposal site within a unit only after following the procedures and conditions prescribed in § 6.5, posting financial assurance prescribed by the Regional Director, and obtaining a permit from the Superintendent under § 6.9.

Proposed § 6.7(c) provides that an existing mineral operation, if governed by a plan of operations approved under 36 CFR part 9 or the terms of a Federal mineral lease, may continue to operate a solid waste disposal site within a unit of the National Park System pursuant to the approved plan of operations or lease. In approving the plan of operations, the Regional Director, under part 9, should have already prescribed conditions to "* * * mitigate the adverse effects of solid waste disposal on the property of the United States * * *" associated with the operation. Congress prescribed this standard as the basis for regulations that govern all existing solid waste disposal sites.

Proposed § 6.7(c) makes clear that where an existing mineral operation is governed by 36 CFR part 9 or the terms of a Federal mineral lease, the Regional Director's approval of the plan of operations constitutes the permit for operation of a solid waste disposal site in connection with the mineral operation. Nor is financial assurance required if a bond has been posted under 36 CFR part 9 or the Bureau of Land Management regulations that govern Federal mineral lessees.

Proposed § 6.7(d) addresses solid waste disposal sites operated by persons proposing mineral operations beginning after the effective date of these regulations. Such an operator is governed by the conditions at § 6.4(a) that preclude any new solid waste disposal sites within the boundaries of a unit of the National Park System, unless the waste is generated solely by National Park Service activities. Thus, persons who begin mineral operations after the effective date of the regulations, as all other persons, could not operate a new solid waste disposal site within the boundaries of a unit of the National Park System. Among the alternatives available to mineral operators are disposing of the solid waste in appropriate facilities outside the unit boundaries, or in an existing solid waste disposal site in a unit whose continued operation has been approved by the Regional Director under 6.5 and permitted under § 6.9.

Proposed § 6.7(d) applies to establishment of a solid waste disposal site by a prospective operator, whether or not governed by regulations at 36 CFR part 9 or the terms of a Federal mineral lease. Since these persons may not establish or operate a new solid waste disposal site within the boundaries of a unit, they need not submit a request, provide financial assurance, or obtain a permit for a solid waste disposal. Nonetheless, the Regional Director must ensure that all persons, including those beginning mineral operations within a unit, obey the prohibition on establishing new solid waste disposal sites on all lands within a unit's boundaries. This task will be relatively simple where an operator is governed by 36 CFR Part 9 or a Federal mineral lease. Where an operator is not so governed, the Regional Director must inform the operator of, and enforce, the conditions that govern establishment or operation of a new solid waste disposal site as prescribed in § 6.4(a).

Nothing in this proposed part prohibits the temporary storage, or stockpiling for return, or the return of mining overburden to the mine site for reclamation purposes. Such activity does not constitute creation of a solid waste disposal site and will not be governed by the need to request or possess a permit, the conditions at § 6.4 and § 6.5, or the financial assurance requirements of § 6.9. This exception applies only to mining overburden that is not hazardous under EPA regulations at 40 CFR part 261.

Section 6.8 National Park Service Solid Waste Responsibilities

Paragraph (a) prohibits the disposal of solid waste in NPS operated solid waste

disposal sites by persons other than those engaged in National Park Service activities. "National Park Service activities" are defined in section 6.3 to include NPS contractors, concessionaires, or commercial use licensees. In several instances, persons other than contractors, concessionaires, or commercial use licensees now dispose of solid waste in NPS operated solid waste disposal sites on Federal lands. Such continued disposal would require site expansion, or may prevent the site from being closed altogether. This is an inappropriate use of Federal park lands that the proposed regulations intend to terminate one year after the final promulgation of these regulations.

Paragraphs (b) and (c) direct the NPS to set up special collection programs to remove hazardous substances from the household waste stream where appropriate and to adhere strictly to the regulations at 40 CFR part 244, Solid Waste Management Guidelines for Beverage Containers.

Section 6.9 Permits

This section of the proposed rule requires that a person proposing to continue, or begin operating, a solid waste disposal site within the boundaries of a unit of the National Park System must possess a permit issued under this part. The regulations exempt only two classes of persons operating solid waste disposal sites from this permit requirement. They are certain residents under § 6.2(f) and existing mineral operators governed by § 6.7(c). The residents do not require a permit and the mineral operator's permit consists of an NPS-approved plan of operations or Federal lease terms. Also note that § 6.2(c)(3) and § 6.7 exclude certain substances from these regulations under certain conditions.

This section also governs the issuing of a permit for the operation of a solid waste disposal site and outlines the contents of such permits. Section 6.9(b) requires that the Regional Director comply with the National Environmental Policy Act (NEPA) and other pertinent laws and executive orders before issuing a permit.

The Regional Director may find that a proposal meets the conditions under which the NPS may approve a new, or continued operation of an existing, site. If a proposal meets the conditions, the Regional Director shall then determine, through preparation of an environmental assessment, whether the Service's approval constitutes a major Federal agency action significantly affecting the quality of the human environment. When the Regional Director finds such an effect, the NPS will prepare an Environmental Impact Statement on the proposal.

Section 6.9(d) makes clear that the issuance of a Special Use Permit is the method by which the Regional Director approves a request and environmental report and provides that the authority to approve a request resides with the Regional Director. The Superintendent may then issue the permit after the operator complies with § 6.10.

Paragraph (e) sets forth the minimum requirements a permit may prescribe for operating a solid waste disposal site. The requirements are aimed at reducing the potential adverse effects attributable to the operation of such sites on the property of the United States. The NPS welcomes comments on what additional requirements might be appropriate or how the listing of requirements could be improved to protect the values and purposes of the National Park System.

Section 6.10 Financial Assurance

This section prescribes the procedures for financial assurance from a solid waste disposal site operator in a unit of the National Park System. The regulations at 40 CFR part 258 require that an operator of a solid waste disposal site for household and certain other commercial and industrial solid wastes (not including hazardous wastes) must provide an estimate of costs related to closure and post-closure care responsibilities of the site, and establish sufficient financial assurance to meet those responsibilities. The NPS sees no need to require added financial assurance, in the form of cash or surety bond guaranteeing payment or performance, where the operator has provided such a bond under regulations at 40 CFR part 258.74(b). Nor shall the NPS require financial assurances from an owner or operator of a site that is a State entity whose debts and liabilities are the debts and liabilities of a State. There is also an exception that may apply to mineral operators under § 6.7(c).

The NPS will require financial assurances when issuing a permit for a new, or continued operation of an existing, solid waste disposal site if the operator has not posted a bond under 40 CFR 258.74(b).

Section 6.11 Appeals

This section establishes procedures under which an applicant for a new, or continued operation of an existing, solid waste disposal site may appeal a Regional Director's decision to the National Park Service Director. Among other issues, an aggrieved operator may appeal a Regional Director's rejection of a request for continued or new operations; or conditions that the Regional Director may attach to an approval; or the amount of the bond set by the Regional Director.

Section 6.12 Penalties

This section of the proposed rule clarifies that operating a solid waste disposal site within a unit of the National Park System without a permit is prohibited. Operating a site in violation of a term or condition of a permit is also prohibited. Violations of these two provisions subject operators to the penalty provisions of 36 CFR 1.3 or, where applicable, revocation of the permit, or forfeiture of bond or security deposit.

Public Participation

It is the policy of the NPS, whenever practicable, to afford the public an opportunity to participate in the rulemaking process. Accordingly, interested parties may submit written comments, suggestions, or objections regarding this proposed rule to the address noted at the beginning of this rule.

Federal Paperwork Reduction Act

The collections of information contained in §§ 6.4, 6.5 and 6.6 of this rule have been approved by the Office of Management and Budget under 44 U.S.C. 3501, *et seq.* and assigned clearance number 1024–0026. The information is required to obtain a benefit in accordance with 16 U.S.C. 460*l*–22(c).

Applicant reporting time for this collection of information is estimated to average 100 hours per response, including the time for reviewing the instructions, searching existing data sources, gathering and maintaining the data needed, and completing and reviewing the collection of information. Send comments regarding this burden estimate or any other aspect of this collection of information, including suggestions for reducing this burden, to Information Collection Officer, National Park Service, 800 North Capitol Street, Washington, DC 20002; and the Office of Management and Budget, Paperwork Reduction Project, Washington, DC 20503.

Compliance With Other Laws

In compliance with the National Environmental Policy Act of 1969 (42 U.S.C. 4321 *et seq.*), the NPS has prepared an environmental assessment (EA) of these proposed regulations. The EA examines whether the implementation of the proposed regulations would have a significant effect on the quality of the human

environment, requiring the preparation of an environmental impact statement. The EA will be available for public inspection and comment at the National Park Service Office of Environmental Quality, located in the Department of Interior Building in Washington, DC for a period running concurrently with the comment period for these proposed regulations.

In accordance with the Regulatory Flexibility Act (Pub. L. 96–511), the NPS is requested to perform a regulatory flexibility analysis for all rules that may have a significant impact on a substantial number of small entities. The NPS has determined that this action will not have a significant impact on a substantial number of small entities since the rule deals with the location of future solid waste disposal sites and the number of existing solid waste disposal sites is small. Consequently, there is no necessity for a regulatory flexibility analysis.

The rule has been reviewed under Executive Order 12866 signed September 30, 1993 (58 FR 51735).

The NPS has reviewed this rule as directed by Executive Order 12360, "Government Actions and Interference with Constitutionally Protected Property Rights," to determine if this rule has policies that have takings implications. The NPS has determined that this rule does not have takings implications because the rule will not deny any private property owner of other beneficial uses of their land, nor will it significantly reduce their land's value.

List of Subjects in 36 CFR Part 6

National parks, Natural resources, Penalties, Reporting and recordkeeping requirements, Waste treatment and disposal.

For reasons set out in the preamble, it is proposed to amend 36 CFR Chapter I by adding a new Part 6 to read as follows:

PART 6—SOLID WASTE DISPOSAL SITES IN UNITS OF THE NATIONAL PARK SYSTEM

Sec.

6.1 Purpose.
6.2 Applicability and scope.
6.3 Definitions.
6.4 Solid waste disposal sites not in operation on September 1, 1984.
6.5 Solid waste disposal sites in operation on September 1, 1984.
6.6 Solid waste disposal sites within new additions to the National Park System.
6.7 Mining wastes.
6.8 National Park Service solid waste responsibilities.
6.9 Permits.
6.10 Financial assurance.
6.11 Appeals.
6.12 Penalties.

Authority: 16 U.S.C. 1, 3, 460*l*–22(c).

§ 6.1 Purpose.

(a) The regulations contained in this part prohibit the operation of any solid waste disposal site, except as specifically provided for, and govern the continued use of any existing solid waste disposal site, within the boundaries of any unit of the National Park System.

(b) The purpose of the regulations in this part is to ensure that all activities within any unit of the National Park System resulting from the operation of a solid waste disposal site are conducted in a manner to prevent the deterioration of air and water quality, to prevent degradation of natural and cultural, including archeological, resources, and to reduce adverse effects to visitor enjoyment.

(c) The regulations in this part interpret and implement Public Law 98–506, 98 Stat. 2338 (16 U.S.C. 460*l*–22(c)).

§ 6.2 Applicability and scope.

(a) The regulations contained in this part apply to all lands and waters within the boundaries of all units of the National Park System, whether federally or nonfederally owned, and without regard to whether access to a solid waste disposal site requires crossing federally-owned or controlled lands or waters.

(b) The regulations contained in this part govern:

(1) The use of solid waste disposal sites not in operation on September 1, 1984, including the approval of new solid waste disposal sites;

(2) The continued use or closure of solid waste disposal sites that were in operation on September 1, 1984;

(3) The continued use or closure of solid waste disposal sites on lands or waters added to the National Park System after the effective date of this part.

(c) *Exceptions.* (1) The regulations contained in this part do not govern the disposal of residential or agricultural solid wastes in a site by a person who can show that he or she:

(i) Resides within the boundaries of the unit;

(ii) Generates the residential or agricultural solid waste within the boundaries of the unit;

(iii) Disposes of the solid waste only on lands or waters that he or she owns or leases within the unit;

(iv) Does not engage in a solid waste disposal practice that poses a reasonable probability of adverse effects on health or the environment, as described by the criteria in 40 CFR Part 257, Criteria For Classification Of Solid Waste Disposal Facilities and Practices, at 40 CFR 257.3–1 to 257.3–8;

(v) Has no practicable alternative site outside the boundaries of the unit for the disposal of agricultural or residential solid waste; and

(vi) Is not required to possess a State or local permit or license for the disposal of solid waste.

(2) The exemption in paragraph (c)(1) of this section does not apply to agricultural solid waste consisting of a chemical used as a pesticide, an item used to apply, or a container used to store, a pesticide.

(3) Manure and crop residue returned to the soil as a fertilizer or soil conditioner are not solid wastes for purposes of this part and do not require a request, environmental report, financial assurance, or permit issued under this part.

(d) The conditions in § 6.4(a) govern the establishment of new, or the expansion of existing, solid waste disposal sites operated by the National Park Service. The conditions in § 6.5(c) govern the continued use of existing solid waste disposal sites operated by the National Park Service. However, the procedural, financial assurance, administrative, and penalty provisions of this part do not apply to any solid waste disposal site operated by the National Park Service.

§ 6.3 Definitions.

The following definitions apply to this part:

Agricultural solid waste means solid waste that is generated by the rearing or harvesting of animals, or the producing or harvesting of crops or trees.

Boundaries means the precisely defined limits of lands or waters that constitute a unit of the National Park System as prescribed by act of Congress, Presidential Proclamation, Interagency Agreement or as published pursuant to law, proclamation or order in the **Federal Register**, or as filed or recorded by a State or political subdivision in accordance with applicable law.

Closure and *Post-closure care* mean all of the requirements prescribed by 40 CFR part 258, Criteria For Municipal Solid Waste Landfills, at 40 CFR 258.60 and 258.61.

Degrade means to lessen or diminish in quantity, quality or value.

Hazardous waste means solid waste defined by 40 CFR part 261, Identification And Listing Of Hazardous Waste, at 40 CFR 261.3. *Hazardous waste* does not include any solid waste listed under 40 CFR 261.4(b).

Leachate means liquid that has percolated through solid waste and has extracted, dissolved, or suspended materials in it.

Mining overburden means material overlying a mineral deposit that is removed to gain access to that deposit.

Mining wastes means residues that result from the extraction of raw materials from the earth.

National Park Service activities means operations conducted by the National Park Service or a National Park Service contractor, concessionaire, or commercial use licensee.

National Park System means any area of land or water now or hereafter administered by the Secretary of the Interior through the National Park Service for park, monument, historic, parkway, recreational, or other purposes.

Natural resource means the components of a park, both biotic and abiotic, including but not limited to, vegetation, wildlife, fish, water, including surface and ground water, air, soils, geological features, including subsurface strata, the natural processes and interrelationships that perpetuate such resources, and attributes that contribute to visitor enjoyment.

Operator means a person conducting or proposing to conduct the disposal of solid waste.

PCBs or PCB item means the same as defined in 40 CFR part 761, Polychlorinated Biphenyls (PCBs) Manufacturing, Processing, Distribution In Commerce, And Use Prohibitions, at 40 CFR 761.3.

Residential solid waste means waste generated by the normal activities of a household, including, but not limited to, food waste, yard waste, and ashes.

Solid waste means garbage, refuse, sludge from a waste treatment plant, water supply treatment plant, or air pollution control facility, and other discarded material, including solid, liquid, semisolid, and contained gaseous material resulting from industrial, commercial, mining, and agricultural operations or from community activities. *Solid waste* does not include a material listed under 40 CFR 261.4(a).

Solid waste disposal site means land or water where solid waste is discharged, deposited, injected, dumped, spilled, leaked, or placed so that such solid waste or a constituent thereof may enter the environment or be emitted into the air or discharged into waters, including ground waters. Solid waste disposal sites include facilities for the incineration of solid waste.

§ 6.4 Solid waste disposal sites not in operation on September 1, 1984.

(a) No person may operate a solid waste disposal site that was not in operation on September 1, 1984, unless the operator has shown and the Regional Director finds that:

(1) The solid waste is generated solely from National Park Service activities conducted within the boundaries of that unit of the National Park System;

(2) There is no reasonable alternative site outside the boundaries of the unit suitable for solid waste disposal;

(3) The site will not degrade any of the natural or cultural resources of the unit;

(4) The site meets all other applicable Federal, State and local laws and regulations, including permitting requirements;

(5) The site conforms to all of the restrictions and criteria in 40 CFR 257.3–1 to 257.3–8, and 40 CFR part 258, subparts B, C, D, E and F;

(6) The site will not be used for the storage, handling, or disposal of a solid waste containing:

(i) Hazardous waste;

(ii) Municipal solid waste incinerator ash;

(iii) Lead-acid batteries;

(iv) PCBs or a PCB Item;

(v) A material registered as a pesticide by the Environmental Protection Agency under the Federal Insecticide, Fungicide and Rodenticide Act (7 U.S.C. 136 *et seq.*);

(vi) Sludge from a waste treatment plant or a septic system;

(vii) Petroleum products, including used crankcase oil from a motor vehicle, or soil contaminated by such products;

(viii) Medical waste; or

(ix) Radioactive materials;

(7) The site is located wholly on nonfederal lands;

(8) The site is not located within the 500-year floodplain, or in a wetland;

(9) The site is not located within one mile of a National Park Service visitor center, campground, ranger station, entrance station, or similar public use facility, or a residential area;

(10) The site will not be detectable by the public by sight, sound or odor from a scenic vista, a public use facility, a designated or proposed wilderness area, a site listed on, or eligible for listing on, the National Register of Historic Places, or a road designated as open to public travel;

(11) The site will receive less than 5 tons per day of solid waste, on an average yearly basis; and

(12) The proposed closure and post-closure care is sufficient to protect the resources of the National Park System unit from degradation.

(b) A person proposing to operate a solid waste disposal site that was not in operation on September 1, 1984, shall submit a request for a permit to the proper Superintendent for review by the Regional Director demonstrating that the solid waste operation meets the criteria in paragraph (a) of this section. The following information must be included in a permit request:

(1) A map or maps, satisfactory to the Regional Director, that adequately shows the proposed area of solid waste disposal, size of the area in acres, existing roads and proposed routes to and from the area of operations and the location and description of surface facilities;

(2) The name and legal addresses of the following:

(i) Owners of record of the land; and

(ii) Any lessee, assignee or designee of the owner, if the proposed operator is not the owner of the land;

(3) The mode and frequency (in number of trips per day) of transport and size and gross weight of major vehicular equipment to be used;

(4) The amount of solid waste to be received, in average tons per day and average cubic yards per day;

(5) The estimated capacity of the site in cubic yards and tons;

(6) A detailed plan of the daily site operations;

(7) A plan for the reclamation and post closure care of the site after completion of solid waste disposal;

(8) Evidence that the proposed operator has obtained all other Federal, State and local permits necessary for solid waste disposal; and

(9) An environmental report that includes the following:

(i) A description of the natural and cultural resources and visitor uses to be affected;

(ii) An assessment of hydrologic conditions of the disposal site with projections of leachate generation, composition, flow paths and discharge areas and geochemical fate of leachate constituents;

(iii) An analysis of the quantitative and qualitative extent to which natural and cultural resources will be affected based on acceptable and appropriate monitoring of existing resource conditions;

(iv) Steps to be taken by the operator to prevent degradation of air and water quality, to manage pests and vermin, and to minimize noise, odor, feeding by native wildlife, and conflicts with visitor uses;

(v) An analysis of alternative locations and methods for the disposal of the solid waste; and

(vi) Any other information required by the Regional Director to effectively

analyze the effects that the proposed solid waste disposal site may have on the preservation, management, and public use of the unit.

(c) If the Regional Director finds that the permit request and environmental report do not meet the conditions of approval set forth in paragraph (a) of this section, the Regional Director shall reject the application and notify the proposed operator of the reasons for the rejection.

§ 6.5 Solid waste disposal sites in operation on September 1, 1984.

(a) The operator of a solid waste disposal site in operation as of September 1, 1984, having been in continuous operation on the effective date of this part, and who wishes to remain in operation, shall submit to the proper Superintendent for review by the Regional Director, within one hundred-eighty (180) calendar days of the effective date of this part, a permit request and an environmental report as described in § 6.4(b) (1) through (9).

(b) Any operator who fails to submit a request as described in paragraph (a) of this section shall not be allowed to continue operations and shall immediately fulfill all applicable closure and post-closure care requirements.

(c) The Regional Director may approve a request to allow the continued use of a solid waste disposal site only if the operator has shown and the Regional Director finds that:

(1) Adverse effects resulting from leachate, noise, odor, vehicular traffic, litter, and other activities upon natural and cultural resources will be adequately mitigated;

(2) The proposed operator meets all other applicable Federal, State, and local laws and regulations, including permit requirements;

(3) The site will no longer be used for the storage, handling, or disposal of a solid waste containing:

(i) Hazardous waste;

(ii) Municipal solid waste incinerator ash;

(iii) Lead-acid batteries;

(iv) PCBs or a PCB Item;

(v) A material registered as a pesticide by the Environmental Protection Agency under the Federal Insecticide, Fungicide and Rodenticide Act (7 U.S.C. 136 *et seq.*);

(vi) Sludge from a waste treatment plant or a septic system;

(vii) Petroleum products, including used crankcase oil from a motor vehicle, or soil contaminated by such products;

(viii) Medical waste; or

(ix) Radioactive materials;

(4) The proposed closure and post closure care is sufficient to protect the resources of the National Park System unit from degradation; and

(5) The site conforms to all of the restrictions and criteria applicable to the site under 40 CFR 257.3 and 40 CFR part 258.

(d) If the Regional Director finds that the permit request and the environmental report do not meet the conditions for approval set forth in paragraph (c) of this section, the Regional Director shall reject the request and notify the proposed operator of the reasons for the rejection. Within ninety (90) calendar days of such notice, the operator of the solid waste disposal site shall cease disposing of solid waste at the site. The operator may resume disposing of solid waste only upon submission and approval of a permit request and environmental report that the Regional Director determines meet the conditions set forth in paragraph (c) of this section.

(e) *Site expansions.* (1) A request for an existing solid waste disposal site to continue operations by expanding its capacity, horizontally or vertically, is considered a request for a new solid waste disposal site and is subject to the conditions of § 6.4(a), except as provided in paragraph (e)(2) of this section.

(2) A request for an existing solid waste disposal site to continue operations by expanding its capacity, horizontally or vertically, will be judged by the approval conditions of paragraph (c) of this section if the operator shows that: (i) The solid waste is generated solely from sources within the boundaries of the unit;

(ii) The area proposed for site expansion encompasses only nonfederal lands or waters owned or leased by the operator; and

(iii) The solid waste disposal site lacks road, rail, or adequate water access to any lands outside the unit.

§ 6.6 Solid waste disposal sites within new additions to the National Park System.

(a) An operator of a solid waste disposal site located on federally-owned lands or waters added to the National Park System by act of Congress or by proclamation after the effective date of this part shall cease operations beginning one year after the date of the land's or water's designation as lying within a National Park System unit's boundaries. The operator shall then immediately fulfill all applicable closure and post-closure care requirements.

(b) An operator of a solid waste disposal site located on nonfederal lands or waters designated as lying within the boundaries of a unit of the National Park System established or expanded after the effective date of this part, and who wishes to remain in operation, shall submit to the Superintendent, if assigned, or the Regional Director, within one hundred-eighty (180) calendar days of the land's or water's designation as lying within a National Park System unit's boundaries, a permit request and environmental report as described in § 6.4(b)(1) through (9).

(c) Any operator who fails to submit a request as described in paragraph (b) of this section shall not be allowed to continue operations and shall immediately fulfill all applicable closure and post-closure care requirements.

(d) The Regional Director shall apply the conditions of § 6.5(c) to a request and environmental report submitted under this section.

§ 6.7 Mining wastes.

(a) Solid waste from mining includes but is not limited to mining overburden, mining byproducts, solid waste from the extraction, processing and beneficiation of ores and minerals, drilling fluids, produced waters, and other wastes associated with exploration, development, or production of oil, natural gas or geothermal energy and any garbage, refuse or sludge associated with mining and mineral operations.

(b) A person conducting mining or mineral operations on the effective date of this part, and not governed by a plan of operations approved under 36 CFR part 9, Minerals Management, or pursuant to the terms of a Federal mineral lease, may continue to operate a solid waste disposal site within the boundaries of a unit only after complying with § 6.5 and § 6.10 and with a permit issued by the Superintendent under § 6.9.

(c) A person conducting mining or mineral operations on the effective date of this part and governed by a plan of operations approved under 36 CFR part 9 or pursuant to the terms of a Federal mineral lease may continue to operate a solid waste disposal site under the terms of their approved plan of operations, or lease. Where an existing mining or mineral operation is governed by 36 CFR part 9 or a Federal mineral lease, an NPS-approved plan of operations shall constitute the permit for solid waste disposal site operation otherwise required under § 6.9. A bond required under 36 CFR part 9 or by the Bureau of Land Management for Federal lessees shall satisfy the requirements of § 6.10.

(d) A person proposing to initiate mining or mineral operations after the

effective date of this part within the boundaries of a unit of the National Park System, whether or not governed by a plan of operations approved under 36 CFR part 9 or the terms of a Federal mineral lease, may establish or operate a solid waste disposal site within a unit only if the solid waste disposal sites meets the conditions of § 6.4(a).

(e) The temporary storage, stockpiling for return, or return of nonhazardous mining overburden to the mine site for the purpose of mine site reclamation do not require a request, environmental report, financial assurance or a permit issued under this part.

§ 6.8 National Park Service solid waste responsibilities.

(a) Beginning one year after the effective date of this part, a Superintendent shall not permit or allow a person to dispose of solid waste at a National Park Service operated solid waste disposal site except for waste generated by National Park Service activities.

(b) The Superintendent of a unit where the National Park Service operates a solid waste disposal site shall establish a hazardous waste collection program for National Park Service and concessionaire households within the unit. The Superintendent shall establish frequency and place of collection but such frequency shall be, at a minimum, every six months.

(c) Each Superintendent will ensure full compliance with regulations at 40 CFR part 244, Solid Waste Management Guidelines For Beverage Containers. Only those units of the National Park System where carbonated beverages in containers are not sold, or that have prepared formal documentation of nonimplementation under 40 CFR 244.100(f)(3) that has been approved by the Director and the Administrator of the Environmental Protection Agency are exempt from the deposit and container return program mandated in 40 CFR part 244.

§ 6.9 Permits.

(a) A permit issued under this section is required to operate a solid waste disposal site within the boundaries of a unit of the National Park System, except as specified in § 6.2(c) or § 6.7(c).

(b) Upon receipt of a request under § 6.4, § 6.5, or § 6.6, the Regional Director shall analyze whether a new site, or continued operation of an existing site, meets the approval conditions of § 6.4 or § 6.5, respectively. The Regional Director shall also review the request under appropriate laws and executive orders, including but not limited to, the National Historic Preservation Act (16 U.S.C. 470), the Endangered Species Act (16 U.S.C. 1531–1543), and E.O. 11988, Floodplain Management (3 CFR, 1978 Comp., p.117), and E.O. 11990 Wetland Protection, (3 CFR, 1978 Comp., p. 121).

(c) The Regional Director must approve or deny a solid waste disposal site request under this part within 180 calendar days of receipt of the request. The 180 calendar days do not include any days required for consultation with State or Federal agencies under, but not limited to, the Endangered Species Act, the National Historic Preservation Act, and the Coastal Zone Management Act, or days required to prepare an Environmental Impact Statement under the National Environmental Policy Act.

(d) If the Regional Director approves a solid waste disposal site request under § 6.4, § 6.5, or § 6.6, the Superintendent may issue, after operator compliance with § 6.10, a nontransferable permit, the term of which shall not exceed five years. The permittee may request a new five year permit upon expiration of an existing permit. The permit instrument shall be Form 10–114 (OMB No. 1024–0026), Special Use Permit, available from the park Superintendent.

(e) A permit for a solid waste disposal site shall prescribe the site capacity and the requirements under which the solid waste disposal site will be operated. The requirements shall include, but are not limited to:

(1) Hours of operation;

(2) Number, frequency, size, gross weight and types of vehicles used, and access routes;

(3) Type and height of perimeter fencing;

(4) Compliance with all applicable Federal, State and local laws and regulations, including permit requirements;

(5) Type and frequency of groundwater, surface water, explosive gas, and other pertinent natural resource monitoring;

(6) Rights and conditions of access for inspection by National Park Service and other responsible Federal, State or local officials;

(7) Closure and post closure care requirements;

(8) Methods of pest and vermin control;

(9) Methods of excluding hazardous waste, municipal solid waste incinerator ash, lead-acid batteries, PCBs and PCB Items, material registered by the Environmental Protection Agency as a pesticide, sludge from a waste treatment plant or septic system, petroleum products, including used crankcase oil from a motor vehicle, or soil contaminated by such products, medical waste, or radioactive materials;

(10) Acceptance of waste generated only from National Park Service activities, except for a solid waste disposal site approved under § 6.5 or § 6.7(c); and

(11) Methods of litter control.

(f) Any conflict between a requirement of the permit issued by the Superintendent and a requirement of State or local law shall be resolved in favor of the stricter of the two requirements.

§ 6.10 Financial assurance.

(a) The Regional Director shall not require a bond or security deposit for a solid waste disposal site for which the operator has established a bond under 40 CFR 258.74(b).

(b) The Regional Director shall not require a bond or security deposit for a solid waste disposal site whose owner or operator is a State entity whose debts and liabilities are the debts and liabilities of a State.

(c) Upon approval of a request to operate a new, or continue an existing, solid waste disposal site, an operator who is not described in paragraphs (a) or (b) of this section must file with the Regional Director a suitable performance bond with satisfactory surety, payable to the Secretary of the Interior or the Secretary's designee. The bond must be conditioned upon faithful compliance with all applicable laws and regulations and the permit requirements as approved. When bonds are to serve as security, an operator must provide a power of attorney to the Secretary or the Secretary's designee. The bond must be issued by a surety company listed and approved by the Department of the Treasury.

(d) In lieu of a performance bond, an operator may deposit with the Secretary or the Secretary's designee cash or negotiable bonds of the United States Government. The cash deposit or the market value of such securities shall be at least equal to the required sum of the bond(s).

(e) The bond or security deposit shall be established by the Regional Director in an amount equal to the estimated cost to accomplish all closure and post-closure care requirements as described in 40 CFR part 258, subpart F, but in no case less than $25,000.

(f) The responsibility and liability of the operator (and the surety, if any) under the bond or security deposit shall continue until the Regional Director determines that closure and post-closure care have been completed in accordance with the permit requirements. No portion of the performance bond or

security deposit may be released until such a determination has been made.

(g) Within 30 calendar days after the Regional Director determines that all closure and post-closure care requirements have been successfully completed according to the permit, the Regional Director shall notify the operator (and the surety, if any) that liability under the bond or security deposit has been terminated and the bond or security deposit released.

§ 6.11 Appeals.

(a) An applicant aggrieved by a decision of the Regional Director with regard to a permit request under this part may appeal, in writing, to the Director for reconsideration. The aggrieved applicant must file the appeal with the Director within 45 calendar days of notification to the applicant of the decision complained of. The appeal must set forth in detail the respects to which the decision of the Regional Director is contrary to, or in conflict with, the facts, the law, this part, or is otherwise in error.

(b)(1) Within 45 calendar days after receiving the written appeal of the aggrieved applicant, the Director shall make a decision in writing. The Director's decision shall include:

(i) A statement of facts;

(ii) A statement of conclusions; and

(iii) An explanation of the reasons upon which the conclusions are based.

(2) The decision of the Director shall constitute the final administrative action of the National Park Service.

§ 6.12 Penalties.

(a) The following are prohibited:

(1) Operating a solid waste disposal site without a permit issued under § 6.9 or, where applicable, without approval granted under § 6.7(c);

(2) Operating a solid waste disposal site without the proper amount or form of bond or security deposit, as prescribed by the Regional Director, when such a bond or security deposit is required by this part; or

(3) Operating a solid waste disposal site in violation of a term or a requirement of a National Park Service issued permit.

(b) A person who violates a provision of paragraph (a) of this section is subject to:

(1) The penalty provisions of 36 CFR 1.3;

(2) Revocation of the permit if a permit exists; and

(3) Forfeiture of a bond or security deposit if a bond or security deposit is required under § 6.10.

Dated: December 3, 1993.

Roger Kennedy,

Director, National Park Service.

[FR Doc. 93–29945 Filed 12–10–93; 8:45 am]

BILLING CODE 4310–70–P

DEPARTMENT OF HEALTH AND HUMAN SERVICES

Health Care Financing Administration

42 CFR Part 413

[BPD–647–P]

RIN 0938–AE

Medicare Program; Reporting of Interest From Zero Coupon Bonds

AGENCY: Health Care Financing Administration (HCFA), HHS.

ACTION: Proposed rule.

SUMMARY: Under this proposed rule, we would require that providers report all interest expense and interest income from zero coupon bonds in the cost reporting period in which the interest was accrued. This proposed rule is necessary to add provisions to the Medicare regulations that specifically address the reporting by providers of interest expense and income from zero coupon bonds.

DATES: Written comments will be considered if we receive them at the appropriate address, as provided below, no later than 5 p.m. on Febraury 11, 1994.

ADDRESSES: Mail written comments (an original and three copies) to the following address: Health Care Financing Administration, Department of Health and Human Services, Attention: BPD–647–P, P.O. Box 7517, Baltimore, MD 21207–0517.

If you prefer, you may deliver your written comments (an original and three copies) to one of the following addresses:

Room 309–G, Hubert H. Humphrey Building, 200 Independence Avenue SW., Washington, DC 20201, or

Room 132, East High Rise Building, 6325 Security Boulevard, Baltimore, MD 21207.

If comments concern information collection or recordkeeping requirements, please address a copy of the comments to: Office of Management and Budget, Office of Information and Regulatory Affairs, Room 3001, New Executive Office Building, Washington, DC 20503. Attention: Allison Herron Eydt.

Because of staffing and resource limitations, we cannot accept comments by facsimile (FAX) transmission. In commenting, please refer to file code BPD–647–P. Comments received timely will be available for public inspection as they are received, generally beginning approximately 3 weeks after publication of a document, in room 309–G of the Department's offices at 200 Independence Avenue, SW., Washington, DC, on Monday through Friday of each week from 8:30 a.m. to 5 p.m. (phone: (202) 690–7890).

Copies: To order copies of the **Federal Register** containing this document, send your request to: New Orders, Superintendent of Documents, P.O. Box 371954, Pittsburgh, PA 15250–7954. Specify the date of the issue requested and enclose a check or money order payable to the Superintendent of Documents, or enclose your Visa or Master Card number and expiration date. Credit card orders can also be placed by calling the order desk at (202) 783–3238 or by faxing to (202) 275–6802. The cost for each copy (in paper or microfiche form) is $4.50. As an alternative, you may view and photocopy the **Federal Register** document at most libraries designated as U.S. Government Depository Libraries and at many other public and academic libraries throughout the country that receive the **Federal Register**.

FOR FURTHER INFORMATION CONTACT: Ann Pash, (410) 966–4516.

SUPPLEMENTARY INFORMATION:

I. Background

Section 1861(v)(1)(A) of the Social Security Act (the Act) defines reasonable cost under Medicare as the cost actually incurred, excluding any cost unnecessary in the efficient delivery of needed health services. That section of the Act also provides that reasonable costs must be determined in accordance with regulations that establish the methods to be used and the items to be included for purposes of determining which costs are allowable for various types or classes of institutions, agencies, and services. In addition, section 1861(v)(1)(A) of the Act specifies that regulations implementing the principles of reasonable cost payment may provide for the use of different methods in different circumstances. This section of the Act is implemented by regulations at 42 CFR part 413. In particular, § 413.24 establishes the methods to be used and the adequacy of data needed to determine allowable costs for various types or classes of institutions, agencies, and services.

Under Medicare, providers are paid for inpatient and outpatient services that they furnish to beneficiaries under Part A (Hospital Insurance) or Part B (Supplementary Medical Insurance). Currently, most hospitals are paid for their hospital inpatient operating costs and capital-related costs under the prospective payment systems in accordance with section 1886 (d) and (g) of the Act and regulations at 42 CFR part 412. Under these systems, Medicare payment is made at a predetermined, specific rate for inpatient operating costs and inpatient capital-related costs for each hospital discharge based on the information contained in actual bills submitted. Section 1886(f)(1)(A) of the Act provides that the Secretary will maintain a system for reporting costs of hospitals paid under the prospective payment systems. This provision is implemented by § 412.52, which requires all prospective payment system hospitals to meet the cost reporting requirements of §§ 413.20 and 413.24, which include submitting a cost report for each 12-month period.

Hospital outpatient costs, hospitals and hospital units that are excluded from the prospective payment systems, as well as most other providers, are generally paid an amount based on the reasonable cost of items and services furnished to beneficiaries, in accordance with the regulations at 42 CFR part 413. These cost-based providers are subject to the same cost reporting requirements as prospective payment hospitals and thus are required by §§ 413.20 and 413.24 to maintain financial records and statistical data sufficient for the proper determination of costs payable under the Medicare program, and to submit cost reports on an annual basis.

For both prospective payment hospitals (during the capital prospective payment system transition period) and cost-based providers, interest expense on capital indebtedness such as loans for acquiring facilities and equipment, or for making capital improvements, is an allowable cost as set forth at §§ 413.130(a)(7) and 413.153. Interest must be necessary—that is, incurred on a loan made to satisfy the financial need of a provider, and for a purpose reasonably related to patient care. It must also be proper—that is, incurred at a rate not in excess of that which a prudent borrower would have to pay in the money market when the loan was made.

One source of financing for providers is the sale of zero coupon bonds. Similarly, one source of provider investment income is the purchase of zero coupon bonds. The name "zero coupon bond" is derived from the fact that there are no coupons issued with these bonds. Zero coupon bonds are issued by government agencies, corporations (including Medicare providers), and banks at a price substantially below the face value of the bond. The difference between the purchase price of a zero coupon bond and the face amount payable at maturity reflects the actual amount of interest and is neither a discount nor an adjustment to the interest rate as with most other bonds. All interest is actually paid when the bond is presented for redemption, at face value, on the date of maturity.

Before December 22, 1989, program policy was based on the policy guidelines in section 202.1 of the Medicare Provider Reimbursement Manual (Transmittal No. 279, January 1983), which states that interest accrued on zero coupon bonds could not be reported as an allowable expense or income offset until the cost reporting period in which the bonds mature (or are sold), since it was not actually paid out or received. Thus, under that policy, interest income from zero coupon bonds purchased by providers for investment purposes must be offset against all allowable interest expense as prescribed in § 413.130(g)(2). In addition, interest income must meet the definition of "necessary" in § 413.153(b)(2)(iii).

II. Recent Policy Changes

A. Interim Policy

As a result of inquiries received from several Medicare fiscal intermediaries and HCFA Regional Offices, we decided it was necessary to review program policy concerning interest from zero coupon bonds. Based on this review and the recognition that in the past neither Medicare regulations nor manual instructions specifically addressed the issue of whether interest from zero coupon bonds should be reported as it accrues, that is, is incurred or earned, we concluded that a more equitable approach than reporting all of the interest accrued at maturity would be to permit providers to claim the annual interest accrued on zero coupon bonds as an allowable expense or an income offset, as appropriate, for the cost reporting period during which it accrues.

Therefore, on December 22, 1989, we issued a Regional Office Memorandum for distribution to all intermediaries that allowed providers to choose which method they would use to report interest expense or income from zero coupon bonds—either at maturity in a lump sum, or each year as the interest accrues, as long as their treatment of interest expense is consistent with their treatment of interest income. If a provider chose to report the interest annually as it accrued, it must also use the "effective interest method," which is explained below. Whichever option the provider chose determines the cost reporting method for the life of that particular issuance of bonds.

B. Applicability of Interim Policy

In the December 22, 1989 memorandum, we stated that that this interim policy would apply to all zero coupon bonds issued or purchased by providers on or after December 22, 1989, and that we intended to issue a revision to the Provider Reimbursement Manual addressing this issue in the near future. In addition, we announced that this interim policy would also apply to any zero coupon bond interest reportable on a cost report that can be amended, or cost report determination that can be reopened, as of December 22, 1989, under the rules on reopening a determination or decision at § 405.1885(a). Thus, a provider's options under the interim policy are as follows:

Bonds Issued Before December 22, 1989

For interest from zero coupon bonds issued before December 22, 1989 that is reportable on cost reports that can be amended, or cost report determinations that can be reopened, on or after December 22, 1989, a provider could request amendment or reopening and specify the method to be used for reporting interest expense and income on zero coupon bonds. Conversely, by not requesting an amendment or reopening, a provider could choose to continue the method already in use.

Bonds Issued on or After December 22, 1989 and Before February 22, 1991

For all zero coupon bonds issued on or after December 22, 1989, but before February 22, 1991, a provider could choose the method it would use to report interest expense or income, as discussed above. Therefore, in cases where a provider's cost reports are not amended, or cost report determinations are not reopenable, on or after December 22, 1989, the provider's preference would be evidenced by the choice it exercises for the first zero coupon bonds issued or purchased on or after December 22, 1989 but before February 22, 1991. In either case, once the provider has exercised its choice, the method of reporting interest accrued on all zero coupon bonds issued or purchased from that date thru February 21, 1991 should be consistent with that choice.

C. Current Policy (Applicable to Bonds Issued on or After February 22, 1991)

In the course of developing the manual revision on this issue, we concluded that it was not appropriate to continue to permit the provider to report accrued interest in a lump sum at maturity because the interest accrues during the life of the bond. Therefore, in February 1991, we revised the Medicare Provider Reimbursement Manual (Transmittal No. 358) to establish our current policy. We now require that for zero coupon bonds issued or purchased by providers on or after February 22, 1991, all interest expense and income must be reported in the cost reporting period in which the interest accrues. Neither the policy enunciated in our December 22, 1989 Regional Office memo nor the one in the manual were ever set forth in regulation.

III. Provisions of the Proposed Rule

The purpose of this proposed rule is to add to the Medicare regulations provisions that specifically address the reporting by providers of interest expense and interest income from zero coupon bonds. This proposed rule would add the definition of "zero coupon bond" at § 413.153(b)(4).

Under new § 413.153(f)(1), for zero coupon bonds issued on or after the effective date of a final regulation, interest expense incurred to finance capital-related costs would be an allowable expense, and interest income earned for investment purposes would be an allowable offset, in the cost reporting period in which the interest accrues.

Under new § 413.153(f)(2), earned interest from zero coupon bonds must be offset against all allowable interest expense as set forth in § 413.130(g)(2). In addition, interest income must meet the definition of "necessary" in § 413.153(b)(2)(iii).

For cost reporting purposes, new § 413.153(f)(3) would require the use of the effective interest method (rather than the straight line method). Under the effective interest method, we would in each computation period (as specified by the bond instrument) apply the interest rate to the sum of the face amount and the accrued interest from prior periods. If the interest computation period involves portions of more than one cost reporting period, the amount of interest for that computation period would be apportioned to each cost reporting period. This method recognizes the actual accrual of interest expense or income for each interest computation period (as specified by the bond instrument) throughout the life of the bond to maturity. A constant effective yield rate is determined and applied to the book value (outstanding loan balance including prior accrued interest) of the bond at the beginning of each period to determine the total interest for the period.

The following is an example of the computation of interest using the effective interest method:

Facts

- Life of zero coupon bond: 15 years.
- Value at maturity: $50,000.
- Bondholder pays $6,996 for the bond.
- Annual interest rate of 13.5506% compounded semi-annually.

From the table below, interest for the first year would be $980.11 ($474.00 plus $506.11).

Col. 1	Col. 2	Col. 3	Col. 4
Six-month periods	Book value beginning of period	Effective interest[1]	Book value end of period (col. 2 and 3)
1	$6,996.00	$474.00	$7,470.00
2	7,470.00	506.11	7,976.11
3	7,976.11	540.40	8,516.51
4	8,516.51	577.02	9,093.53
29	43,855.94	2,971.37	46,827.31
30	46,827.31	3,172.69	50,000.00

[1] Computed by multiplying the book value at the beginning of each period (Col. 2) by 6.7753% (the annual interest rate of 13.5506%÷2=6.7753%).

IV. Impact Statement

We generally prepare a regulatory flexibility analysis that is consistent with the Regulatory Flexibility Act (RFA) (5 U.S.C. 601 through 612) unless the Secretary certifies that a proposed rule would not have a significant economic impact on a substantial number of small entities. For purposes of the RFA we consider all hospitals to be small entities.

Also, section 1102(b) of the Act requires the Secretary to prepare a regulatory impact analysis for any proposed rule that would have a significant impact on the operations of a substantial number of small rural hospitals. Such an analysis must conform to the provisions of section 603 of the RFA. For purposes of section 1102(b) of the Act, we define a small rural hospital as a hospital with fewer than 50 beds located outside a metropolitan statistical area.

We have determined, and the Secretary certifies, that this proposed rule would not have a significant economic impact on a substantial number of small entities, and would not have a significant impact on the operations of a substantial number of small rural hospitals. Therefore, we are not preparing analyses for either the RFA or section 1102(b) of the Act.

V. Other Required Information

A. Collection of Information Requirements

Section 413.153 of this proposed rule contains information collection and recordkeeping requirements that are subject to review by the Office of Management and Budget (OMB) under the Paperwork Reduction Act of 1980 (44 U.S.C. 3501 et seq.). The information collection requirements concern reporting by providers of interest expense and income from zero coupon bonds. There is no additional reporting burden on those providers who have zero coupon bonds. Since there is no discussion in Section 213 of the Provider Reimbursement Manual relating to the reporting of interest expense for zero coupon bonds, current practice is for providers to store the information relating to the bonds on its ledgers in the same manner as other types of bonds (see Section 212 of the Provider Reimbursement Manual). Organizations and individuals desiring to submit comments on the information collection requirements should direct them to the OMB official whose name appears in the "ADDRESS" section of this preamble.

B. Response to Comments

Because of the large number of items of correspondence that we normally receive on a proposed rule, we are not able to respond to them individually. However, we will consider all comments that we receive by the date and time specified in the "DATES" section of this preamble, and, if we proceed with a final rule, we will respond to the comments in the preamble of that rule.

List of Subjects in 42 CFR Part 413

Health facilities, Kidney diseases, Medicare, Puerto Rico, Reporting and recordkeeping requirements.

42 CFR chapter IV, part 413, is amended as follows:

PART 413—PRINCIPLES OF REASONABLE COST REIMBURSEMENT; PAYMENT FOR END-STAGE RENAL DISEASE SERVICES

A. The authority citation for part 413 continues to read as follows:

Authority: Secs. 1102, 1814(b), 1815, 1833(a), (i), and (n), 1861(v), 1871, 1881, 1883, and 1886 of the Social Security Act (42 U.S.C. 1302, 1395f(b), 1395g, 1395l(a), (i), and (n), 1395x(v), 1395hh, 1395rr, 1395tt, and 1395ww); sec. 104(c) of Pub. L. 100–360 as amended by sec. 608(d)(3) of Pub. L. 100–485 (42 U.S.C. 1395ww (note)); and sec. 101(c) of Pub. L. 101–234 (42 U.S.C. 1395ww (note)).

Subpart G—Capital Related Costs

B. Section 413.153 is amended by adding paragraphs (b)(4) and (f) to read as follows:

§ 413.153 Interest expense.

* * * * *

(b) *Definitions*—

* * * * *

(4) *Zero coupon bonds.* Zero coupon bonds are issued by government agencies, corporations, and banks at a price substantially below the face value. The difference between the purchase price and the face value reflects the actual amount of interest and is neither a discount nor an adjustment to the interest rate as with other bonds. Interest is paid at maturity when the bond is redeemed at face value.

* * * * *

(f) *Zero coupon bonds.*

(1) *Interest on bonds issued on or after [insert effective date of final rule].* For zero coupon bonds issued on or after [insert effective date of final rule], interest expense incurred to finance capital-related costs is an allowable expense, and interest income earned for investment purposes is an allowable offset, in the cost reporting period in which the interest accrues.

(2) *Interest income offset.* Earned interest from zero coupon bonds must be offset against all allowable interest expense as prescribed in § 413.130(g)(2) and must meet the definition of "necessary" in paragraph (b)(2) of this section.

(3) *Use of effective interest method.* (i) Interest expense and interest income from zero coupon bonds that is reported as it accrues must be amortized using the effective interest method. This method recognizes the actual accrual of interest expense or income for each interest computation period (as specified by the bond instrument) throughout the life of the bond.

(ii) A constant effective yield rate is determined and applied to the book value (outstanding loan balance including prior accrued interest) of the bond at the beginning of each period to determine the total interest for the period.

(iii) If the interest computation period involves portions of more than one cost reporting period, the amount of interest for that computation period shall be apportioned to each cost reporting period.

(iv) An example of the computation of interest using the effective interest method follows:

Facts

Life of zero coupon bond: 15 years.
Value at maturity: $50,000.
Bondholder pays $6,996 for the bond.
Annual interest rate is 13.5506% compounded semiannually.

From the table below, interest for the first year would be $980.11 ($474.00 plus $506.11).

Col. 1	Col. 2	Col. 3	Col. 4
Six-month periods	Book value beginning of period	Effective interest[9]	Book value end of period (columns 2+3)
1	$6,996.00	$474.00	$7,470.00
2	7,470.00	506.11	7,976.11
3	7,976.11	540.40	8,516.51
4	8,516.51	577.02	9,093.53
29	43,855.94	2,971.37	46,827.31
30	46,827.31	3,172.69	50,000.00

[9] Computed by multiplying the book value at the beginning of each period (Column 2) by 6.7753% (the annual interest rate of 13.5506%÷2=6.7753%).

(Catalog of Federal Domestic Assistance Program No. 93.773, Medicare—Hospital Insurance; and Program No. 93.774, Medicare—Supplementary Medical Insurance Program)

Dated: July 11, 1993.

Bruce Vladeck,

Administrator, Health Care Financing Administration.

Dated: August 31, 1993.

Donna E. Shalala,

Secretary.

[FR Doc. 93–30089 Filed 12–10–93; 8:45 am]

BILLING CODE 4120–01–P

FEDERAL COMMUNICATIONS COMMISSION

47 CFR Part 68

[CC Docket No. 93–292; FCC 93–496]

Policies and Rules Concerning Toll Fraud

AGENCY: Federal Communications Commission.

ACTION: Proposed rule.

SUMMARY: This Notice of Proposed Rulemaking (NPRM) seeks comment on proposals to: Achieve closer coordination between the industry, consumers, vendors, law enforcement agencies, Congress, and the Commission to aid in the detection and prevention of toll fraud; improve consumer education initiatives by the Commission, consumer groups, and the telecommunications industry; determine that tariff liability provisions that fail to recognize an obligation by the carrier to warn customers of risks of using carrier services are unreasonable; establish a Federal policy assigning

liability for payphone fraud; codify a requirement for written warnings for all telecommunications equipment registered under part 68; and determine measures to prevent cellular and Line Information Database (LIDB) fraud.

DATES: Comments due January 14, 1994, Reply Comments due February 10, 1994.

FOR FURTHER INFORMATION CONTACT: Linda Dubroof, Domestic Services Branch, Domestic Facilities Division, Common Carrier Bureau, (202) 634–1808.

SUPPLEMENTARY INFORMATION: This summarizes the Commission's NPRM in the matter of Policies and Rules concerning Toll Fraud. The item was adopted by the Commission on November 10, 1993, and released December 2, 1993, and bears the title of "Policies and Rules Concerning Toll Fraud, Notice of Proposed Rulemaking" (CC Docket 93–292, FCC 93–496). The NPRM and supporting file are available for inspection and copying during the weekday hours of 9 a.m. to 4:30 p.m. in the FCC Reference Center, room 239, 1919 M St., NW., Washington, DC, or copies may be purchased from the Commission's duplicating contractor, ITS, 2100 M St., NW., Suite 140, Washington, DC 20037, phone (202) 857–3800. The NPRM will be published in the FCC Record.

Analysis of Proceeding

This summarizes the Commission's NPRM in the matter of Policies and Rules Concerning Toll Fraud (CC Docket 93–292, FCC 93–496, adopted November 10, 1993, and released December 2, 1993). In the NPRM, the Commission proposed policies and rules regarding toll fraud in order to develop effective and efficient measures to address both existing and developing toll fraud problems. In this proceeding, the Commission tentatively concluded that carrier tariff provisions that historically have placed strict liability on customers that are victims of fraud without acknowledging any obligation by carriers to warn customers of risks of using carrier services are unreasonable. The Commission also tentatively found that where a payphone provider takes precautionary, anti-fraud steps, and is not a customer of the carrier, the payphone provider is not liable for the fraud. Further, the Commission proposed a rule that requires written warnings for all telecommunications equipment registered under part 68 of the Commission's rules. The Commission seeks comment on cellular fraud prevention, LIDB fraud issues, and ways to improve customer education initiatives by the Commission, customers, and the telecommunications industry.

This is a nonrestricted notice and comment rulemaking proceeding. Ex Parte presentations are permitted, except during the Sunshine Agenda period, provided they are disclosed as provided in Commission rules. See generally 47 CFR 1.1202, 1.1203 and 1.1206(a).

Objectives

This rulemaking proceeding is initiated to develop effective and efficient measures to address toll fraud problems. The Commission requests comment on proposals to achieve closer coordination between the industry, consumers, vendors, law enforcement agencies, Congress, and the Commission to aid in the detection and prevention of toll fraud; improve consumer education initiatives by the Commission, consumer groups, and the telecommunications industry; determine that tariff liability provisions that fail to recognize an obligation by the carrier to warn customers of risks of using carrier services are unreasonable; establish a Federal policy assigning liability for payphone fraud; and codify a requirement for written warnings for all telecommunications equipment registered under part 68.

Reporting, Recordkeeping and Other Compliance Requirements

The actions proposed in this Notice of Proposed Rulemaking may affect large and small common carriers, manufacturers of equipment registered under part 68, and CPE owners. It is not estimated that the burden of including warnings with the filing of part 68 registration applications will be a significant economic burden on manufacturers. It is not estimated that the burden of including warnings in tariff filings or in billing inserts will be a significant economic burden on subject common carriers.

Description, Potential Impact, and Number of Small Entities Involved

The proposals discussed in this Notice of Proposed Rulemaking primarily could affect the degree to which small businesses are responsible for charges associated with fraudulent calls made over their equipment. The Secretary shall send a copy of this Notice of Proposed Rulemaking including the certification to the Chief Counsel for Advocacy of the Small Business Administration in accordance with paragraph 603(A) of the Regulatory Flexibility Act. Public Law 96–354, 94 Stat. 1164, 5 U.S.C. section 601 et seq. (1981).

Any Significant Alternatives Minimizing the Impact of Small Entities Consistent with the Stated Objectives

The Notice of Proposed Rulemaking solicits comments on a variety of alternatives to achieve Commission objectives.

Paperwork Reduction

The proposals suggested impose filing requirements on entities already required to file part 68 and tariff filings.

Comment Dates

Pursuant to applicable procedures set forth in § § 1.415 and 1.419 of the Commission's rules, 47 CFR 1.415 and 1.419, interested parties may file comments on or before January 14, 1994, and reply comments on or before February 10, 1994. To file formally in this proceeding, interested parties must file an original and four copies of all comments, reply comments, and supporting documents with the reference number "CC Docket 93–292" on each document. If interested parties want each Commissioner to receive a personal copy of comments, interested parties must file an original plus nine copies. Interested parties should send comments and reply comments to the Office of the Secretary, Federal Communications Commission, Washington, DC 20554. Comments and reply comments will be available for public inspection during regular business hours in the FCC Reference Center, room 239, Federal Communications Commission, 1919 M Street, NW., Washington, DC. Copies of comments and reply comments are available through the Commission's duplicating contractor: International Transcription Service, Inc. (ITS, Inc), 2100 M Street, NW., suite 140, Washington, DC 20037, (202) 857–3800.

Ordering Clauses

Accordingly, it is ordered, Pursuant to 47 U.S.C. section 154(i) of the Communications Act of 1934, as amended, 47 U.S.C. section 154(i), that notice is hereby given, of the proposed regulatory action described below and that comment is sought on these proposals.

The Secretary shall serve a copy of this Notice of Proposed Rulemaking on the Small Business Administration.

List of Subjects in 47 CFR Part 68

Communications common carriers.

Federal Communications Commission.

William F. Caton,

Acting Secretary.

Proposed Rules

Part 68 of chapter I of title 47 of the Code of Federal Regulations is proposed to be amended as follows:

PART 68—CONNECTION OF TERMINAL EQUIPMENT TO THE TELEPHONE NETWORK

1. The authority citation for part 68 continues to read as follows:

Authority: Section 4, 5, 303, 48 Stat. 1066, 1068, 1082 as amended; 47 U.S.C. 154, 155, 303.

2. Section 68.200 is proposed to be amended by adding a new paragraph (1) to read as follows:

§ 68.200 Application for equipment registration.

* * * * *

(1) A prominent and conspicuous warning accompanying the equipment and included in any instruction manual or other literature accompanying the equipment and on the exterior packaging of the equipment which warns equipment users of the risks of toll fraud associated with the equipment and its specific features. The warning in the instructional manual or literature should discuss the customer's financial exposure and measures available to limit that exposure. In the case of PBX and similar equipment, if default codes are set by the manufacturer, vendor, or carrier, those codes must be fully explained in the instructional manual or literature and the warning required by this section must explain the risks of using the equipment without modifying these default codes.

[FR Doc. 93–30285 Filed 12–10–93; 8:45 am]

BILLING CODE 6712–01–M

---

47 CFR Part 73

[MM Docket No. 93–295, RM–8362]

Radio Broadcasting Services; San Clemente, CA

AGENCY: Federal Communications Commission.

ACTION: Proposed rule.

SUMMARY: This document requests comments on a petition for rule making initiated pursuant to a Commission directive, proposing the deletion of Channel 285A at San Clemente, California, based upon the unavailability of a transmitter site for use by a fully spaced station at that community. See, 8 FCC Rcd 3123 (1993). Coordinates specified for Channel 285A at San Clemente are 33–22–34 and 117–32–20.

DATES: Comments must be filed on or before January 31, 1994, and reply comments on or before February 15, 1994.

ADDRESSES: Secretary, Federal Communications Commission, Washington, DC 20554.

FOR FURTHER INFORMATION CONTACT: Nancy Joyner, Mass Media Bureau, (202) 634–6530.

SUPPLEMENTARY INFORMATION: This is a synopsis of the Commission's Notice of Proposed Rule Making, MM Docket No. 93–295, adopted November 5, 1993, and released December 8, 1993. The full text of this Commission decision is available for inspection and copying during normal business hours in the FCC's Reference Center (room 239), 1919 M Street NW., Washington, DC. The complete text of this decision may also be purchased from the Commission's copy contractors, International Transcription Service, Inc., (202) 857–3800, 2100 M Street NW., Suite 140, Washington, DC 20037.

Provisions of the Regulatory Flexibility Act of 1980 do not apply to this proceeding.

Members of the public should note that from the time a Notice of Proposed Rule Making is issued until the matter is no longer subject to Commission consideration or court review, all ex parte contacts are prohibited in Commission proceedings, such as this one, which involve channel allotments. See 47 CFR 1.1204(b) for rules governing permissible ex parte contacts.

For information regarding proper filing procedures for comments, See 47 CFR 1.415 and 1.420.

List of Subjects in 47 CFR Part 73

Radio Broadcasting.

Federal Communications Commission.

Victoria M. McCauley,

Assistant Chief, Allocations Branch Policy and Rules Division Mass Media Bureau.

[FR Doc. 93–30327 Filed 12–10–93; 8:45 am]

BILLING CODE 6712–01–M

---

47 CFR Part 73

[MM Docket No. 93–294, RM–8342]

Radio Broadcasting Services; Alexander City, AL and West Point, GA

AGENCY: Federal Communications Commission.

ACTION: Proposed rule.

SUMMARY: This document requests comments on a petition for rule making filed by Solar Broadcasting Company, Inc., licensee of Station WSTH–FM, Channel 291C1, Alexander City, Alabama, seeking the reallotment of Channel 291C1 to West Point, Georgia, and modification of its license accordingly. Petitioner proposes no reception change in the present technical facilities of Station WSTH–FM to accommodate its proposal, and is therefore requested to provide additional information to demonstrate the public interest benefits that would result from the proposed change in community of license. Coordinates for this proposal are 32–45–33 and 85–28–04.

DATES: Comments must be filed on or before January 31, 1994, and reply comments on or before February 15, 1994.

ADDRESSES: Secretary, Federal Communications Commission, Washington, DC 20554. In addition to filing comments with the FCC, interested parties should serve the petitioner, as follows: Allen Woodall, Jr., President, Solar Broadcasting Company, Inc., 1236 Broadway, Columbus, GA 31994.

FOR FURTHER INFORMATION CONTACT: Nancy Joyner, Mass Media Bureau, (202) 634–6530.

SUPPLEMENTARY INFORMATION: This is a synopsis of the Commission's Notice of Proposed Rule Making, MM Docket No. 93–294, adopted November 4, 1993, and released December 8, 1993. The full text of this Commission decision is available for inspection and copying during normal business hours in the FCC's Reference Center (room 239), 1919 M Street NW., Washington, DC. The complete text of this decision may also be purchased from the Commission's copy contractors, International Transcription Service, Inc., (202) 857–3800, 2100 M Street NW., suite 140, Washington, DC 20037.

Provisions of the Regulatory Flexibility Act of 1980 do not apply to this proceeding.

Members of the public should note that from the time a Notice of Proposed Rule Making is issued until the matter is no longer subject to Commission consideration or court review, all ex parte contacts are prohibited in Commission proceedings, such as this one, which involve channel allotments. See 47 CFR 1.1204(b) for rules governing permissible ex parte contacts.

For information regarding proper filing procedures for comments, see 47 CFR 1.415 and 1.420.

List of Subjects in 47 CFR Part 73

Radio broadcasting.

Federal Communications Commission.

Victoria M. McCauley,

Assistant Chief, Allocations Branch, Policy and Rules Division, Mass Media Bureau.

[FR Doc. 93–30326 Filed 12–10–93; 8:45 am]

BILLING CODE 6712–01–M

DEPARTMENT OF TRANSPORTATION

National Highway Traffic Safety Administration

49 CFR Part 571

[Docket No. 92–29; Notice 3]

RIN 2127–AA00

Federal Motor Vehicle Safety Standards; Stability and Control of Medium and Heavy Vehicles During Braking

AGENCY: National Highway Traffic Safety Administration (NHTSA), DOT.

ACTION: Notice of intent.

SUMMARY: The purpose of this notice is to announce that NHTSA will need an additional six months to complete the rulemaking which proposed to require medium and heavy vehicles to be equipped with antilock brake systems (ABS) to improve the lateral stability and control of these vehicles while braking. Accordingly, this notice extends the rulemaking period from December 8, 1993 to June 8, 1994. This notice is being issued pursuant to the Motor Carrier Act of 1991, a part of the Intermodal Surface Transportation Efficiency Act (ISTEA) of 1991.

FOR FURTHER INFORMATION CONTACT: Mr. George Soodoo, Office of Crash Avoidance, National Highway Traffic Safety Administration, 400 Seventh Street SW., Washington, DC 20590 (202) 366–5892.

SUPPLEMENTARY INFORMATION: The Motor Carrier Act of 1991 (the Act), a part of the Intermodal Surface Transportation Efficiency Act (ISTEA) of 1991, requires NHTSA to address several matters through rulemaking. One of these matters, set forth in Section 4012 of the Act, directs NHTSA to initiate rulemaking concerning methods for improving braking performance of new commercial motor vehicles (i.e., those vehicles with a gross vehicle weight rating of 26,001 or more pounds), including truck tractors, trailers, and their dollies. Congress directed that such a rulemaking must include an examination of antilock systems, means of improving brake compatibility, and methods of ensuring effectiveness of brake timing. The Act requires that the rulemaking be consistent with the Motor Carrier Safety Act of 1984 (49 U.S.C. 2519(b)) and be carried out pursuant to, and in accordance with, the National Traffic and Motor Vehicle Safety Act of 1966 (15 U.S.C. 1381).

Section 4012(d) of the Act generally provides that NHTSA complete the rulemaking within 18 months after its initiation. However, that section also provides that if the agency is unable to meet that deadline, it "may extend the period for an additional 6 months after giving notice in the **Federal Register** of the need for such an extension * * *."

Pursuant to section 4012(a), NHTSA has been conducting both rulemaking and research. The agency initiated a rulemaking concerning measures to improve medium and heavy vehicle braking performance by issuing an advance notice of proposed rulemaking (ANPRM) on June 8, 1992 (57 FR 24212). In addition, to more fully understand antilock brake systems, the agency has conducted extensive fleet testing of ABS-equipped truck tractors and trailers with respect to their reliability, maintainability, and durability. The agency has only recently completed the report on the portion of the fleet study program addressing Trailers.

The agency has also recently issued a notice of proposed rulemaking (NPRM) to amend Standard No. 105, Hydraulic Brake Systems, and Standard No. 121, Air Brake Systems, proposing that medium and heavy vehicles be equipped with antilock brake systems (ABS). (58 FR 50739, September 28, 1993). The NPRM specified a 60 day comment period that closed on November 29, 1993. The agency received comments to the proposal from a wide variety of interests, including safety advocacy organizations, heavy truck manufactures, trailer manufacturers, brake manufacturers, and others.

NHTSA will need additional time, beyond the initial 18 months specified by the Act, to complete this rulemaking. The large amount of interest, as evidenced by the docket comments, and the complexity of the issues related to the rulemaking have made the initial schedule impossible to meet. During the additional time, the agency will review the public comments and consider whether to promulgate a final rule to require ABS on medium and heavy vehicles. Among the issues being considered by the agency are:

(1) The need to require ABS;

(2) An appropriate definition for "ABS" that covers all ABS designs that significantly improve a vehicle's lateral stability and control by preventing wheel lockup, while screening out inferior systems that do not prevent wheel lockup or result in overly long stopping distances;

(3) The need to include supplemental tests, including a 30 mph braking-in-a-curve test on a low coefficient of friction surface using a full brake application;

(4) The specific test conditions in the braking-in-a-curve test;

(5) Compatibility issues between tractors and trailers, including the need to include malfunction lamps in the truck cab and on the trailer exterior;

(6) The need to regulate the electrical power source;

(7) The rulemaking's effect on intermediate and final stage manufacturers and trailer manufacturers;

(8) Harmonization with international standards;

(9) The appropriate implementation schedule for different types of medium and heavy vehicles;

(10) The costs associated with requiring medium and heavy vehicles to be equipped with ABS; and

(11) The rulemaking's benefits in preventing jackknifes and other collisions, including reducing the number of fatalities and other injuries as well as severity of property damage.

Based on the above considerations and consistent with section 4012(d) of the Act, the agency is issuing this notice to extend the rulemaking period for an additional six months from December 8, 1993 to June 8, 1994. The additional time will enable the agency to determine whether to issue a final rule after it completes its analysis of the comments responding to the NPRM. The agency currently anticipates making a final decision in the Spring of 1994.

Issued on: December 8, 1993.

Barry Felrice,

Associate Administrator for Rulemaking.

[FR Doc. 93–30371 Filed 12–8–93; 4:04 pm]

BILLING CODE 4910–59–M

Notices

Federal Register
Vol. 58, No. 237
Monday, December 13, 1993

This section of the FEDERAL REGISTER contains documents other than rules or proposed rules that are applicable to the public. Notices of hearings and investigations, committee meetings, agency decisions and rulings, delegations of authority, filing of petitions and applications and agency statements of organization and functions are examples of documents appearing in this section.

DEPARTMENT OF COMMERCE

Foreign-Trade Zones Board

[Docket 59–93]

Proposed Foreign-Trade Zone—New London, CT, (New London Customs Port of Entry) Application and Public Hearing

An application has been submitted to the Foreign-Trade Zones Board (the Board) by the New London Foreign-Trade Zone Commission, an agency of the City of New London, Connecticut, requesting authority to establish a general-purpose foreign-trade zone in New London, Connecticut, within the New London Customs port of entry. The application was submitted pursuant to the provisions of the Foreign-Trade Zones Act, as amended (19 U.S.C. 81a-81u), and the regulations of the Board (15 CFR Part 400). It was formally filed on November 26, 1993. The applicant is authorized to make the proposal under Connecticut Statutes, Chapter 97, Section 7–136d.

The proposed foreign-trade zone would consist of 3 sites (201 acres) all located in New London, Connecticut. *Site 1* (138 acres)—New London State Pier, State Pier Road; *Site 2* (43 acres)—"The Mills" industrial area, Maple and Pequot Avenues; and, *Site 3* (20 acres)—Shaw's Cove, Banks and Howard Streets. Each site involves several parcels with a mix of public and private ownership.

The application contains evidence of the need for zone services in the New London area. Interest has been expressed in using zone procedures for warehousing/distribution of pharmaceutical products. Specific manufacturing approvals are not being sought at this time. Requests would be made to the Board on a case-by-case basis.

In accordance with the Board's regulations (as revised, 56 FR 50790–50808, 10–8–91), an examiner has been designated to investigate the application and report to the Board.

As part of the investigation, the Commerce examiner will hold a public hearing on February 10, 1994, at 5 p.m., City Hall, City Council Chambers, 181 Captain's Walk/State Street, New London, Connecticut.

Public comment on the application is invited from interested parties. Submissions (original and 3 copies) shall be addressed to the Board's Executive Secretary at the address below. The closing period for their receipt is February 28, 1994. Rebuttal comments in response to material submitted during the foregoing period may be submitted during the subsequent 15-day period (to March 15, 1994).

A copy of the application and accompanying exhibits will be available during this time for public inspection at the following locations:

Office of Development and Planning, City of New London, 111 Union Street, New London, Connecticut 06320

Office of the Executive Secretary, Foreign-Trade Zones Board, room 3716, U.S. Department of Commerce, 14th & Pennsylvania Avenue, NW., Washington, DC 20230

Dated: December 6, 1993.

John J. Da Ponte, Jr.,

Executive Secretary.

[FR Doc. 93–30283 Filed 12–10–93; 8:45 am]

BILLING CODE 3510–DS–P

International Trade Administration

Applications for Duty-Free Entry of Scientific Instruments

Pursuant to section 6(c) of the Educational, Scientific and Cultural Materials Importation Act of 1966 (Pub. L. 89–651; 80 Stat. 897; 15 CFR 301), we invite comments on the question of whether instruments of equivalent scientific value, for the purposes for which the instruments shown below are intended to be used, are being manufactured in the United States.

Comments must comply with Subsections 301.5(a)(3) and (4) of the regulations and be filed within 20 days with the Statutory Import Programs Staff, U.S. Department of Commerce, Washington, DC 20230. Applications may be examined between 8:30 a.m. and 5 p.m. in room 4211, U.S. Department of Commerce, 14th Street and Constitution Avenue, NW, Washington, DC.

Docket Number: 93–139. *Applicant:* U.S.Department of Agriculture, Agricultural Research Service, Southern Regional Research Center, 1100 Robert E. Lee Boulevard, P.O. Box 19687, New Orleans, LA 70179. *Instrument:* Electron Microscope, Model CM12. *Manufacturer:* Philips, The Netherlands. *Intended Use:* The instrument will be used in research into the structural nature of the transformations from "in vivo" state to processed state, which is of fundamental interest in the nature and properties of agricultural products. *Application Received by Commissioner of Customs:* November 5, 1993.

Docket Number: 93–142. *Applicant:* Veterans Affairs Medical Center, Pathology Service (113 CDD), 2250 Leestown Road, Lexington, KY 40511–1093. *Instrument:* Electron Microscope, Model CM10. *Manufacturer:* Philips, The Netherlands. *Intended Use:* The instrument will be used for studies of human tissues in investigations to identify or clarify the cause and mechanisms of the disease process. The instrument will also be used to provide thorough training in the fields of anatomic pathology and laboratory medicine for pathology residents. *Application Received by Commissioner of Customs:* November 9, 1993.

Docket Number: 93–140. *Applicant:* Rutgers University, Procurement and Contracting, P.O. Box 1089, Piscataway, NJ 08854. *Instrument:* High Intensity Light Source Attachment. *Manufacturer:* Hi-Tech Scientific Limited, United Kingdom. *Intended Use:* The instrument will be used in investigations of biologically important enzymes, their substrates and inhibitors in experiments to determine the fundamental chemical mechanism of enzyme catalyzed reactions. *Application Received by Commissioner of Customs:* November 10, 1993.

Docket Number: 93–141. *Applicant:* University of California, Los Alamos National Laboratory, P.O. Box 990, Los Alamos, NM 87545. *Instrument:* Current Limiting Interrupting Device. *Manufacturer:* Calor-Emag AG, Germany. *Intended Use:* The instrument will be used to protect the power supplies of a magnet system producing very high magnetic fields during experiments related to metals,

superconducting materials and devices, semiconducting materials and devices and organic materials, magnetization, conductivity, Dehaas Van Alphen effect, magnetoresistance, electronic properties of metals and semiconductors. *Application Received by Commissioner of Customs:* November 9, 1993.

Docket Number: 93–143. *Applicant:* University of California, Berkeley, Department of Chemistry, Berkeley, CA 94720. *Instrument:* Electron Spin Resonance Spectrometer System, Model ESP300E-10/2.7. *Manufacturer:* Bruker Instruments, Germany. *Intended Use:* The instrument will be used for studies of spin labeled proteins investigating the protein conformational changes during transmembrane signal transduction and translocation across membranes. *Application Received by Commissioner of Customs:* November 10, 1993.

Docket Number: 93–144. *Applicant:* Duke University, Department of Geology, Box 90227, Durham, NC 27708–0227. *Instrument:* Electron Microprobe (Used), Model CAMEBAX. *Manufacturer:* Cameca, France. *Intended Use:* The instrument will be used in basic research of geological materials studying microcompositional information (on the scale of a few cubic microns) in order to further fundamental understanding of the earth's materials and geological processes. In addition, the instrument will be used for educational purposes in the course Geology 273, Analytical Techniques in which students learn the principles and applications of electron microbeam techniques. *Application Received by Commissioner of Customs:* November 10. 1993.

Frank W. Creel

Director, Statutory Import Programs Staff

[FR Doc. 93–30282 Filed 12–10–93; 8:45 am]

BILLING CODE 3510–DS–F

National Oceanic and Atmospheric Administration

Marine Mammals

AGENCY: National Marine Fisheries Service, NOAA, Commerce.

ACTION: Issuance of a Scientific Research Permit (P397A).

SUMMARY: Notice is hereby given that Dan R. Salden, Ph.D., Hawaii Whale Research Foundation, Box 1772, Southern Illinois University at Edwardsville, Edwardsville, IL 62026–1772, has been issued a permit to take humpback whales (*Megaptera novaeangliae*) for purposes of scientific research.

ADDRESSES: The permit and related documents are available for review upon written request or by appointment, in the following office(s);

Permits Division, Office of Protected Resources, National Marine Fisheries Service, East-West Highway, room 13130, Silver Spring, MD 20910 (301/713–2289);

Director, Southwest Region, NMFS, 501 W. Ocean Boulevard, Suite 4200, Long Beach, CA 90802–4213 (310/980–4016); and

Coordinator, Pacific Area Office, Southwest Region, NMFS, 2570 Dole Street, room 106, Honolulu, HI 96822–2396 (808/955–8831).

SUPPLEMENTARY INFORMATION: On August 31, 1993, notice was published in the **Federal Register** (58 FR 45881) that a request for a scientific research permit to take humpback whales (*Megaptera novaeangliae*), bottlenose dolphins (*Tursiops truncatus*), spinner dolphins (*Stenella longirostris*), spotted dolphins (*Stenella attenuata*), false killer whales (*Pseudorca crassidens*), and pilot whales (*Globicephala macrorhynchus*) had been submitted by the above-named individual. The requested permit has been issued, under the authority of the Marine Mammal Protection Act of 1972, as amended (16 U.S.C. 1361 *et seq.*), the Regulations Governing the Taking and Importing of Marine Mammals (50 CFR part 216), the Endangered Species Act (ESA) of 1973, as amended (16 U.S.C. 1531 *et seq.*), and the regulations governing the taking, importing, and exporting of endangered fish and wildlife (50 CFR part 222). Authorization for the Alaska component of the requested research was withheld, thus, the permit authorizes the conduct of activities in Hawaii only.

Issuance of this Permit as required by the ESA of 1973 was based on a finding that such Permit: (1) Was applied for in good faith; (2) will not operate to the disadvantage of the endangered species which is the subject of this permit; and (3) is consistent with the purposes and policies set forth in section 2 of the ESA.

Dated: December 6, 1993.

William W. Fox, Jr.,

Director, Office of Protected Resources, National Marine Fisheries Service.

[FR Doc. 93–30311 Filed 12–10–93; 8:45 am]

BILLING CODE 3510–22–M

Marine Mammals

AGENCY: National Marine Fisheries Service (NMFS), NOAA, Commerce.

ACTION: Issuance of public display Permit No. 881.

SUMMARY: On Friday, October 15, 1993, notice was published in the **Federal Register** (58 FR 53499) that an application (P196A) had been filed by James W. Tiebor, dba Leisure Connection, Leinenfelsstr. 26, 8000 Munich 60, Germany. A public display permit was requested to obtain the permanent care and custody of two castrated male California sea lions (*Zalophus californianus*) currently in the custody of the Dinnes Veterinary Memorial Hospital and maintained at Hawk's Cay Resort, Marathon, Florida, for the purposes of public display at Europa*Park, Rust, Germany.

The public comment period closed on November 15, 1993. No comments were received from the public.

Notice is hereby given that on December 6, 1993, as authorized by the provisions of the Marine Mammal Protection Act (MMPA), the NMFS issued a permit for the above activities subject to the special conditions set forth therein.

Issuance of this permit is based on a finding that the proposed taking is consistent with the purposes and policy of the MMPA. The NMFS has determined that Europa*Park offers an acceptable program for education or conservation purposes. Europa*Park is open to the public on a regularly scheduled basis and access to the facility is not limited or restricted other than by the charging of an admission fee.

The permit is available for review by appointment in the following offices:

Permits Division, Office of Protected Resources, NMFS, 1315 East-West Highway, room 13130, SSMC3, Silver Spring, MD 20910, (301) 713–2289; and

Director, Southeast Region, NMFS, NOAA, 9450 Koger Blvd., St. Petersburg, FL 37702 (813) 893–4131.

Dated: December 6, 1993.

William W. Fox., Jr.,

Director, Office of Protected Resources, National Marine Fisheries Service.

[FR Doc. 93–30310 Filed 12–10–93; 8:45 am]

BILLING CODE 3510–22–M

COMMITTEE FOR THE IMPLEMENTATION OF TEXTILE AGREEMENTS

Adjustment of Import Limits for Certain Cotton, Wool and Man-Made Fiber Textile Products Produced or Manufactured in Guatemala

December 6, 1993.

AGENCY: Committee for the Implementation of Textile Agreements (CITA).

ACTION: Issuing a directive to the Commissioner of Customs adjusting limits.

EFFECTIVE DATE: December 13, 1993.

FOR FURTHER INFORMATION CONTACT: Nicole Bivens Collinson, International Trade Specialist, Office of Textiles and Apparel, U.S. Department of Commerce, (202) 482–4212. For information on the quota status of these limits, refer to the Quota Status Reports posted on the bulletin boards of each Customs port or call (202) 927–5850. For information on embargoes and quota re-openings, call (202) 482–3715.

SUPPLEMENTARY INFORMATION:

Authority: Executive Order 11651 of March 3, 1972, as amended; section 204 of the Agricultural Act of 1956, as amended (7 U.S.C. 1854).

The current limit for Categories 340/640 is being increased for carryforward and swing. The limit for Category 448 is being reduced to account for the swing being applied.

A description of the textile and apparel categories in terms of HTS numbers is available in the CORRELATION: Textile and Apparel Categories with the Harmonized Tariff Schedule of the United States (see **Federal Register** notice 57 FR 54976, published on November 23, 1992). Also see 57 FR 59334, published on December 15, 1992.

The letter to the Commissioner of Customs and the actions taken pursuant to it are not designed to implement all of the provisions of the bilateral agreement, but are designed to assist only in the implementation of certain of its provisions.

Ronald I. Levin,

Acting Chairman, Committee for the Implementation of Textile Agreements.

Committee for the Implementation of Textile Agreements

December 6, 1993.

Commissioner of Customs,
Department of the Treasury, Washington, DC 20229.

Dear Commissioner: This directive amends, but does not cancel, the directive issued to you on December 9, 1992, by the Chairman, Committee for the Implementation of Textile Agreements. That directive concerns imports of certain cotton, wool and man-made fiber textile products, produced or manufactured in Guatemala and exported during the twelve-month period which began on January 1, 1993 and extends through December 31, 1993.

Effective on December 13, 1993, you are directed to amend further the December 9, 1992 directive to adjust the limits for cotton, wool and man-made fiber textile products in the following categories, as provided under the provisions of the current bilateral agreement between the Governments of the United Stataes and Guatemala:

Category	Adjusted twelve-month limit [1]
340/640	1,023,589 dozen.
448	10,269 dozen.

[1] The limit has not been adjusted to account for any imports exported after December 31, 1992.

The guaranteed access levels for Categories 340/640 and 448 remain unchanged.

The Committee for the Implementation of Textile Agreements has determined that these actions fall within the foreign affairs exception to the rulemaking provisions of 5 U.S.C. 553(a)(1).

Sincerely,

Ronald I. Levin,

Acting Chairman, Committee for the Implementation of Textile Agreements.

[FR Doc. 93–30208 Filed 12–10–93; 8:45 am]

BILLING CODE 3510–DR–F

Adjustment of Import Limits for Certain Cotton and Man-Made Fiber Textiles and Textile Products Produced or Manufactured in Malaysia

December 7, 1993.

AGENCY: Committee for the Implementation of Textile Agreements (CITA).

ACTION: Issuing a directive to the Commissioner of Customs adjusting limits.

EFFECTIVE DATE: December 7, 1993.

FOR FURTHER INFORMATION CONTACT: Jennifer Aldrich, International Trade Specialist, Office of Textiles and Apparel, U.S. Department of Commerce, (202) 482–4212. For information on the quota status of these limits, refer to the Quota Status Reports posted on the bulletin boards of each Customs port or call (202) 927–6712. For information on embargoes and quota re-openings, call (202) 482–3715.

SUPPLEMENTARY INFORMATION:

Authority: Executive Order 11651 of March 3, 1972, as amended; section 204 of the Agricultural Act of 1956, as amended (7 U.S.C. 1854).

The current limits for certain categories are being adjusted, variously, for swing, special shift, carryover and carryforward.

A description of the textile and apparel categories in terms of HTS numbers is available in the CORRELATION: Textile and Apparel Categories with the Harmonized Tariff Schedule of the United States (see **Federal Register** notice 57 FR 54976, published on November 23, 1992).

The letter to the Commissioner of Customs and the actions taken pursuant to it are not designed to implement all of the provisions of the bilateral agreement but are designed to assist only in the implementation of certain of their provisions.

D. Michael Hutchinson,

Acting Chairman, Committee for the Implementation of Textile Agreements.

Committee for the Implementation of Textile Agreements

December 7, 1993.

Commissioner of Customs,
Department of the Treasury, Washington, DC 20229.

Dear Commissioner: This directive amends, but does not cancel, the directive issued to you on November 17, 1992, by the Chairman, Committee for the Implementation of Textile Agreements. That directive concerns imports of certain cotton, wool and man-made fiber textiles and textile products and silk blend and other vegetable fiber apparel, produced or manufactured in Malaysia and exported during the twelve-month period which began on January 1, 1993 and extends through December 31, 1993.

Effective on December 7, 1993, you are directed to amend further the directive dated November 17, 1992 to adjust the limits for the following categories, as provided under the terms of the current bilateral agreement, as amended, between the Governments of the United States and Malaysia:

Category	Adjusted twelve-month limit [1]
218, 219, 220, 225–227, 313–315, 317, 326 and 613/614/615/617, as a group.	92,423,370 square meters equivalent.
Other specific limits	
300/301	914,567 kilograms.
333/334/335/835	149,096 dozen of which not more than 125,540 dozen each shall be in Categories 333, 334, 335 and 835.
336/636	305,941 dozen.
338/339	798,139 dozen.
340/640	1,153,236 dozen.
341/641	1,193,218 dozen of which not more than 459,666 dozen shall be in Category 341.
347/348	382,071 dozen of which not more than 347,634 shall be in Categories 347–W/348–W [2].
351/651	211,739 dozen.
634/635	688,750 dozen of which not more than 407,309 dozen shall be in Category 635.
638/639	344,720 dozen.

Category	Adjusted twelve-month limit [1]
647/648	1,390,004 dozen of which not more than 892,555 dozen each shall be in Categories 647–K [3] and 648–K [4].

[1] The limits have not been adjusted to account for any imports exported after December 31, 1991.

[2] Category 347–W: only HTS numbers 6203.19.1020, 6203.19.4020, 6203.22.3020, 6203.22.3030, 6203.42.4005, 6203.42.4010, 6203.42.4015, 6203.42.4025, 6203.42.4035, 6203.42.4045, 6203.42.4050, 6203.42.4060, 6203.49.3020, 6210.40.2033, 6211.20.1520, 6211.20.3010 and 6211.32.0040; Category 348–W: only HTS numbers 6204.12.0030, 6204.19.3030, 6204.22.3040, 6204.22.3050, 6204.29.4034, 6204.62.3000, 6204.62.4005, 6204.62.4010, 6204.62.4020, 6204.62.4030, 6204.62.4040, 6204.62.4050, 6204.62.4055, 6204.62.4065, 6204.69.3010, 6204.69.9010, 6210.50.2033, 6211.20.1550, 6211.20.6010, 6211.42.0030 and 6217.90.0050.

[3] Category 647–K: only HTS numbers 6103.23.0040, 6103.23.0045, 6103.29.1020, 6103.29.1030, 6103.43.1520, 6103.43.1540, 6103.43.1550, 6103.43.1570, 6103.49.1020, 6103.49.1060, 6103.49.3014, 6112.12.0050, 6112.19.1050, 6112.20.1060 and 6113.00.0044.

[4] Category 648–K: only HTS numbers 6104.23.0032, 6104.23.0034, 6104.29.1030, 6104.29.1040, 6104.29.2038, 6104.63.2010, 6104.63.2025, 6104.63.2030, 6104.63.2060, 6104.69.2030, 6104.69.2060, 6104.69.3026, 6112.12.0060, 6112.19.1060, 6112.20.1070, 6113.00.0052 and 6117.90.0046.

The Committee for the Implementation of Textile Agreements has determined that these actions fall within the foreign affairs exception to the rulemaking provisions of 5 U.S.C. 553(a)(1).

Sincerely,

D. Michael Hutchinson,

Acting Chairman, Committee for the Implementation of Textile Agreements.

[FR Doc. 93–30321 Filed 12–10–93; 8:45 am]

BILLING CODE 3510–DR–F

Establishment of an Import Limit for Certain Cotton Textile Products Produced or Manufactured in the United Arab Emirates

December 6, 1993.

AGENCY: Committee for the Implementation of Textile Agreements (CITA).

ACTION: Issuing a directive to the Commissioner of Customs establishing a limit.

EFFECTIVE DATE: December 13, 1993.

FOR FURTHER INFORMATION CONTACT: Jennifer Tallarico, International Trade Specialist, Office of Textiles and Apparel, U.S. Department of Commerce, (202) 482–4212. For information on the quota status of this limit, refer to the Quota Status Reports posted on the bulletin boards of each Customs port or call (202) 927–5850. For information on embargoes and quota re-openings, call (202) 482–3715. For information on categories on which consultations have been requested, call (202) 482-3740.

SUPPLEMENTARY INFORMATION:

Authority: Executive Order 11651 of March 3, 1972, as amended; section 204 of the Agricultural Act of 1956, as amended (7 U.S.C. 1854).

Inasmuch as consultations have not yet been held on a mutually satisfactory solution on Category 317, the United States Government has decided to control imports in this category for the twelve month period beginning on July 28, 1993 and extending through July 27, 1994 at a level of 23,303,171 square meters.

The United States remains committed to finding a solution concerning this category. Should such a solution be reached in consultations with the Government of the United Arab Emirates further notice will be published in the **Federal Register**.

A description of the textile and apparel categories in terms of HTS numbers is available in the CORRELATION: Textile and Apparel Categories with the Harmonized Tariff Schedule of the United States (see **Federal Register** notices 57 FR 54976, published on November 23, 1992; and 58 FR 62645, published on November 29, 1993). Also see 58 FR 42952, published on August 12, 1993.

Ronald I. Levin,

Acting Chairman, Committee for the Implementation of Textile Agreements.

Committee for the Implementation of Textile Agreements

December 6, 1993.

Commissioner of Customs,
Department of the Treasury, Washington, DC 20229.

Dear Commissioner: Under the terms of section 204 of the Agricultural Act of 1956, as amended (7 U.S.C. 1854), and the Arrangement Regarding International Trade in Textiles done at Geneva on December 20, 1973, as further extended on December 9, 1992; and in accordance with the provisions of Executive Order 11651 of March 3, 1972, as amended, you are directed to prohibit, effective on December 13, 1993, entry into the United States for consumption and withdrawal from warehouse for consumption of cotton textile products in Category 317, produced or manufactured in the United Arab Emirates and exported during the period beginning on July 28, 1993 and extending through July 27, 1994, in excess of 23,303,171 square meters.

Textile products in Category 317 which have been exported to the United States prior to July 28, 1993 shall not be subject to the limit established in this directive.

You are directed to retain the monitoring data for Category 317 (see directive dated August 6, 1993). This data shall be applied to the limit established in this directive. Charges for the period July 28, 1993 through August 15, 1993 are zero.

Textile products in Category 317 which have been released from the custody of the U.S. Customs Service under the provisions of 19 U.S.C. 1448(b) or 1484(a)(1) prior to the effective date of this directive shall not be denied entry under this directive.

In carrying out the above directions, the Commissioner of Customs should construe entry into the United States for consumption to include entry for consumption into the Commonwealth of Puerto Rico.

The Committee for the Implementation of Textile Agreements has determined that this action falls within the foreign affairs exception of the rulemaking provisions of 5 U.S.C. 553(a)(1).

Sincerely,

Ronald I. Levin,

Acting Chairman, Committee for the Implementation of Textile Agreements.

[FR Doc. 93–30304 Filed 12–10–93; 8:45 am]

BILLING CODE 3510–DR–F

Announcement of Import Restraint Limits for Certain Cotton and Man-Made Fiber Textile Products Produced or Manufactured in Oman

December 6, 1993.

AGENCY: Committee for the Implementation of Textile Agreements (CITA).

ACTION: Issuing a directive to the Commissioner of Customs establishing limits for the new agreement year.

EFFECTIVE DATE: January 1, 1994.

FOR FURTHER INFORMATION CONTACT: Jennifer Tallarico, International Trade Specialist, Office of Textiles and Apparel, U.S. Department of Commerce, (202) 482–4212. For information on the quota status of these limits, refer to the Quota Status Reports posted on the bulletin boards of each Customs port or call (202) 927–5850. For information on embargoes and quota re-openings, call (202) 482–3715.

SUPPLEMENTARY INFORMATION:

Authority: Executive Order 11651 of March 3, 1972, as amended; section 204 of the Agricultural Act of 1956, as amended (7 U.S.C. 1854).

The Memorandum of Understanding (MOU) dated October 6, 1993 between the Governments of the United States and the Sultanate of Oman establishes limits for the period beginning on January 1, 1994 and extending through December 31, 1994.

A description of the textile and apparel categories in terms of HTS numbers is available in the

CORRELATION: Textile and Apparel Categories with the Harmonized Tariff Schedule of the United States (see **Federal Register** notice 57 FR 54976, published on November 23, 1992). Information regarding the availability of the 1994 CORRELATION will be published in the **Federal Register** at a later date.

The letter to the Commissioner of Customs and the actions taken pursuant to it are not designed to implement all of the provisions of the MOU, but are designed to assist only in the implementation of certain of its provisions.

Ronald I. Levin,

Acting Chairman, Committee for the Implementation of Textile Agreements.

Committee for the Implementation of Textile Agreements

December 6, 1993.

Commissioner of Customs,
Department of the Treasury, Washington, DC 20229.

Dear Commissioner: Under the terms of section 204 of the Agricultural Act of 1956, as amended (7 U.S.C. 1854); pursuant to the Memorandum of Understanding dated October 6, 1993 between the Governments of the United States and the Sultanate of Oman; and in accordance with the provisions of Executive Order 11651 of March 3, 1972, as amended, you are directed to prohibit, effective on January 1, 1994, entry into the United States for consumption and withdrawal from warehouse for consumption of cotton and man-made fiber textile products in the following categories, produced or manufactured in Oman and exported during the twelve-month period beginning on January 1, 1994 and extending through December 31, 1994, in excess of the following levels of restraint:

Category	Twelve-month restraint limit
338/339	415,000 dozen.
340/640	200,000 dozen.
341/641	150,000 dozen.
347/348	715,000 dozen.

Imports charged to these category limits, except Categories 338/339, for the periods October 1, 1992 through December 31, 1993 (Categories 340/640) and January 1, 1993 through December 31, 1993 (Categories 341/641 and 347/348), shall be charged against those levels of restraint to the extent of any unfilled balances. In the event the limits established for those periods have been exhausted by previous entries, such goods shall be subject to the levels set forth in this directive.

In carrying out the above directions, the Commissioner of Customs should construe entry into the United States for consumption to include entry for consumption into the Commonwealth of Puerto Rico.

The Committee for the Implementation of Textile Agreements has determined that these actions fall within the foreign affairs exception of the rulemaking provisions of 5 U.S.C. 553(a)(1).

Sincerely,

Ronald I. Levin,

Acting Chairman, Committee for the Implementation of Textile Agreements.

[FR Doc. 93–30305 Filed 12–10–93; 8:45 am]

BILLING CODE 3510–DR–F

Announcing Adjustment of Import Limits and Import Charges for Certain Cotton and Man-Made Fiber Textile Products and Silk Blend and Other Vegetable Fiber Apparel Produced or Manufactured in Sri Lanka

December 6, 1993.

AGENCY: Committee for the Implementation of Textile Agreements (CITA).

ACTION: Announcing adjustment of import limits and import charges.

FOR FURTHER INFORMATION CONTACT: Jennifer Aldrich, International Trade Specialist, Office of Textiles and Apparel, U.S. Department of Commerce, (202) 482–4212. For information on the quota status of current limits, refer to the Quota Status Reports posted on the bulletin boards of each Customs port or call (202) 927–6708. For information on embargoes and quota re-openings, call (202) 482–3715.

SUPPLEMENTARY INFORMATION:

Authority: Executive Order 11651 of March 3, 1972, as amended; section 204 of the Agricultural Act of 1956, as amended (7 U.S.C. 1854).

In an unpublished letter dated December 6, 1993, the Chairman of CITA directs the Commissioner of Customs, effective on December 13, 1993, to increase the limit for Categories 347/348/847, for the restraint period July 1, 1992 through June 30, 1993, for special shift, and reduce the limit for Categories 647/648 to account for the increase. Consequently, 53,284 dozen, currently charged to Categories 347–T/348–T/847–T for the July 1, 1993 through June 30, 1994 restraint period, are being deducted from the current period and charged back to the corresponding categories for the July 1, 1992 through June 30, 1993 period.

A description of the textile and apparel categories in terms of HTS numbers is available in the CORRELATION: Textile and Apparel Categories with the Harmonized Tariff Schedule of the United States (see **Federal Register** notice 57 FR 54976, published on November 23, 1992 and 58 FR 62645, published on November 29, 1993). Also see 57 FR 29290, published on July 1, 1992; and 58 FR 34570, published on June 28, 1993.

Ronald I. Levin,

Acting Chairman, Committee for the Implementation of Textile Agreements.

[FR Doc. 93–30306 Filed 12–10–93; 8:45 am]

BILLING CODE 3510–DR–F

DEPARTMENT OF DEFENSE

Office of the Secretary

Department of Defense Wage Committee; Closed Meetings

Pursuant to the provisions of section 10 of Public Law 92–463, the Federal Advisory Committee Act, notice is hereby given that a meeting of the Department of Defense Wage Committee will be held on Tuesday, January 4, 1994; Tuesday, January 11, 1994; Tuesday, January 18, 1994; and Tuesday, January 25, 1994, at 2 p.m. in room 800, Hoffman Building #1, Alexandria, Virginia.

The Committee's primary responsibility is to consider and submit recommendations to the Assistant Secretary of Defense (Personnel and Readiness) concerning all matters involved in the development and authorization of wage schedules for federal prevailing rate employees pursuant to Public Law 92–392. At this meeting, the Committee will consider wage survey specifications, wage survey data, local wage survey committee reports and recommendations, and wage schedules derived therefrom.

Under the provisions of section 10(d) of Public Law 92–463, meetings may be closed to the public when they are "concerned with matters listed in 5 U.S.C. 552b." Two of the matters so listed are those "related solely to the internal personnel rules and practices of an agency," (5 U.S.C. 552b(c)(2)), and those involving "trade secrets and commercial or financial information obtained from a person and privileged or confidential" (5 U.S.C. 552b(c)(4)).

Accordingly, the Deputy Assistant Secretary of Defense (Civilian Personnel Policy/Equal Opportunity) hereby determines that all portions of the meeting will be closed to the public because the matters considered are related to the internal rules and practices of the Department of Defense (5 U.S.C. 552b(c)(2)), and the detailed wage data considered were obtained from officials of private establishments with a guarantee that the data will be held in confidence (5 U.S.C. 552b(c)(4)).

However, members of the public who may wish to do so are invited to submit

material in writing to the chairman concerning matters believed to be deserving of the Committee's attention.

Additional information concerning this meeting may be obtained by writing the Chairman, Department of Defense Wage Committee, room 3D264, The Pentagon, Washington, DC 20310.

Dated: December 8, 1993.

L.M. Bynum,

Alternate OSD Federal Register Liaison Officer, Department of Defense.

[FR Doc. 93–30323 Filed 12–10–93; 8:45 am]

BILLING CODE 5000–04–M

DEPARTMENT OF DEFENSE

GENERAL SERVICES ADMINISTRATION

NATIONAL AERONAUTICS AND SPACE ADMINISTRATION

[OMB Control No. 9000–0026]

Clearance Request for Change Order Accounting

AGENCIES: Department of Defense (DOD), General Services Administration (GSA), and National Aeronautics and Space Administration (NASA).

ACTION: Notice of request for an extension to an existing OMB clearance (9000–0026).

SUMMARY: Under the provisions of the Paperwork Reduction Act of 1980 (44 U.S.C. 3501), the Federal Acquisition Regulation (FAR) Secretariat has submitted to the Office of Management and Budget (OMB) a request to review and approve an extension of a currently approved information collection requirement concerning Change Order Accounting.

FOR FURTHER INFORMATION CONTACT: Beverly Fayson, Office of Federal Acquisition Policy, GSA (202) 501–4755.

SUPPLEMENTARY INFORMATION:

A. Purpose

FAR clause 52.243–6, Change Order Accounting, requires that, whenever the estimated cost of a change or series of related changes exceed $100,000, the contracting officer may require the contractor to maintain separate accounts for each change or series of related changes. The account shall record all incurred segregable, direct costs (less allocable credits) of work, both changed and unchanged, allocable to the change. These accounts are to be maintained until the parties agree to an equitable adjustment for the changes or until the matter is conclusively disposed of under the Disputes clause. This requirement is necessary in order to be able to account properly for costs associated with changes in supply and research and development contracts that are technically complex and incur numerous changes.

B. Annual Reporting Burden

Public reporting burden for this collection of information is estimated to average *5* minutes per response, including the time for reviewing instructions, searching existing data sources, gathering and maintaining the data needed, and completing and reviewing the collection of information. Send comments regarding this burden estimate or any other aspect of this collection of information, including suggestions for reducing this burden, to General Services Administration, FAR Secretariat, 18th & F Streets, NW, Room 4037, Washington, DC 20405, and to the FAR Desk Officer, Office of Information and Regulatory Affairs, Office of Management and Budget, Washington, DC 20503.

The annual reporting burden is estimated as follows: Respondents, *8,750*; responses per respondent, *18*; total annual responses, *157,500*; preparation hours per response, *.084*; and total response burden hours, *13,230*.

C. Annual Recordkeeping Burden

The annual recordkeeping burden is estimated as follows: Recordkeepers, *8,750*; hours per recordkeeper, *1.5*; total recordkeeping burden hours, *13,125*; and total burden hours *26,355*.

OBTAINING COPIES OF PROPOSALS: Requester may obtain copies of OMB application or justification from the General Services Administration, FAR Secretariat (VRS), Room 4037, Washington, DC 20405, telephone (202) 501–4755. Please cite OMB Control No. 9000–0026, Change Order Accounting, in all correspondence.

Dated November 30, 1993.

Beverly Fayson,

FAR Secretariat.

[FR Doc. 93–30287 Filed 12–10–93; 8:45 am]

BILLING CODE 6810–34–M

DEPARMENT OF DEFENSE

Department of the Navy

Notice of Intent To Prepare a Programmatic Environmental Impact Statement for Proposed Realignment of Naval Air Station Lemoore, California

Pursuant to section 102(2)(C) of the National Environmental Policy Act of 1969, as implemented by the Council on Environmental Quality regulations (40 CFR parts 1500–1508), the Department of the Navy announces its intent to prepare a Programmatic Environmental Impact Statement (EIS) to evaluate the environmental effects of the realignment of Naval Air Station (NAS) Lemoore, California. This action is being conducted in accordance with the Defense Base Closure and Realignment Act of 1990 (Pub. L. 101–510) and the specific 1993 base closure and realignment decisions approved by the Congress in September 1993.

The proposed action involves the relocation of Navy aircraft, personnel, and equipment from NAS Miramar, San Diego, California, to NAS Lemoore. Additional operational, training, maintenance, storage, administrative, bachelor quarters, community facilities, and utilities are required at NAS Lemoore to support the additional base loading. Several military construction projects are proposed to upgrade existing facilities and construct new facilities to support the increased operations. These projects are grouped into the following categories: (1) Hangar rehabilitation, (2) airfield operational facilities/operational airspace, (3) storage facilities, (4) utility upgrades (e.g., industrial waste, sanitary sewer, potable water supply, electrical, telephone/computer network, natural gas, compressed air, and storm water), (5) administrative facilities, (6) community support facilities, (7) personnel support facilities, (8) instructional facilities, (9) industrial facilities, and (10) airfield operational pavement.

Air operations will be expanded as a result of this relocation, with options to include adding new airspace over the central San Joaquin Valley, extending approximately 23 miles northwest of NAS Lemoore and 37 miles southeast. This new airspace will be in addition to existing airspace over the central coastal mountains, and the northern California desert area that is currently used for military training.

Alternatives addressed in the EIS will focus on means of meeting realignment requirements at NAS Lemoore on Navy-owned lands, including alternative construction site locations, use of current and proposed Military Operating Areas, and changing air operations. An airspace analysis is being conducted to identify alternative scenarios for additional aircraft operations and training. Cumulative impacts associated with the realignment of all personnel and activities to the region around NAS Lemoore will be considered. Major environmental issues that will be addressed in the EIS include, but are not limited to,

socioeconomic impacts, air and water quality, noise, wetlands, endangered species, cultural resources and local infrastructure impacts.

The Navy will initiate a scoping process for the purpose of determining the scope of issues to be addressed and for identifying the significant issues related to this action. The Navy will hold a public scoping meeting on January 13, 1994, at 7 p.m. at Veterans Memorial Hall in Lemoore, California. This meeting will be advertised in selected local newspapers.

A brief presentation will precede request for public comment. Navy representatives will be available at this meeting to receive comments from the public regarding issues of concern to the public. It is important that federal, state, and local agencies and interested individuals take this opportunity to identify environmental concerns that should be addressed during the preparation of the EIS. In the interest of available time, each speaker will be asked to limit their oral comments to five minutes.

Agencies and the public are also invited and encouraged to provide written comments in addition to, or in lieu of, oral comments at the public meeting. To be most helpful, scoping comments should clearly describe specific issues or topics which the commentor believes the EIS should address. Written statements and or questions regarding the scoping process should be mailed to: Commanding Officer, Western Division, Naval Facilities Engineering Command, 900 Commodore Drive, San Bruno, California 94066–2402 (Attn: Mr. Surinder Sikand, Code 09F2SU), telephone (415) 244–3721. All comments must be received no later than January 26, 1994.

Dated: December 8, 1993.

Michael P. Rummel,

LCDR, JAGC, USN, Federal Register Liaison Officer.

[FR Doc. 93–30385 Filed 12–10–93; 8:45 am]

BILLING CODE 3810–AE–W

DEPARTMENT OF ENERGY

Office of Fossil Energy

[Docket EA–100]

Application for Electricity Export Authorization by San Diego Gas & Electric Company

AGENCY: Office of Fossil Energy, Department of Energy.

ACTION: Notice of application.

SUMMARY: On November 9, 1993, the San Diego Gas & Electric Company (SDG&E), filed an application with the Department of Energy (DOE) for authorization to export electric energy to Canada pursuant to section 202(e) of the Federal Power Act. SDG&E proposes to export up to 400 megawatts (MW) of capacity and associated energy to British Columbia Hydro and Power Authority (BC Hydro).

DATES: Comments, protests or requests to intervene must be submitted on or before January 12, 1994.

ADDRESSES: Comments, protests or requests to intervene should be addressed as follows: Office of Coal & Electricity (FE–52), Office of Fuels Programs, Office of Fossil Energy, Department of Energy, 1000 Independence Avenue, SW., Washington, DC 20585.

Docket Number EA–100 should appear clearly on the envelope and the document contained therein.

FOR FURTHER INFORMATION CONTACT: William H. Freeman (Program Office) 202–586–5883 or Lise Howe (Program Attorney) 202–586–2900.

SUPPLEMENTARY INFORMATION: On November 9, 1993, SDG&E filed an application with the Office of Fossil Energy (FE) for authorization to export electric energy to Canada pursuant to section 202(e) of the Federal Power Act. Specifically, SDG&E has applied for authorization to transmit up to 400 MW of capacity and associated energy to BC Hydro. The electrical energy proposed for export would be delivered to BC Hydro over transmission facilities owned and operated by the Bonneville Power Administration (BPA) for which Presidential permits have been granted. These facilities consist of two 500-kilovolt (kV) lines between BPA's Custer Substation and the U.S.-Canadian border (PP–10), and two 230-kV lines extending from BPA's Boundary Substation to the U.S.-Canadian border (PP–36 and PP–46).

SDG&E, BPA, and BC Hydro are all parties to the Western Systems Power Pool Agreement (Agreement). In all 53 other electric utilities in 18 states and one Canadian province are parties to the Agreement.

The Agreement provides for sales of coordination power and transmission services among members so long as the price is below a cost-based ceiling.

SDG&E will deliver the power it sells to BC Hydro over BPA's transmission system. The portion of BPA's system used to transmit power to BC Hydro will be the Canadian (Northern) Intertie which consists of:

1. Two 500-kV lines between BPA's Custer Substation and the U.S.-Canadian border;
2. Two 230-kV lines from BPA's Boundary Substation to the U.S.-Canadian border, including the associated substation facilities.

SDG&E states in its application that it can affect the export by transmitting power from SDG&E's ownership-like entitlement on the Pacific AC or Pacific DC intertie onto BPA's facilities at the California-Oregon or Nevada-Oregon border.

Any person desiring to be heard or to protest said application should file a petition to intervene or protest with the address provided above in accordance with Rules 211 and 214 of the Rules of Practice and Procedure (18 CFR 385.211, 385.214).

Any such petitions and protests should be filed with the DOE no later than January 12, 1994. Additional copies of such petitions to intervene or protests also should be filed directly with Ms. Betty Cash Hunter, Power Contracts Administrator, San Diego Gas & Electric Company, P.O. Box 1831, San Diego, CA 92122.

Pursuant to 18 CFR 385.211, protests and comments will be considered by the DOE in determining the appropriate action to be taken, but will not serve to make protestants parties to the proceeding. Any person wishing to become a party must file a petition to intervene under 18 CFR 385.214. Section 385.214 requires that a petition to intervene must state, to the extent known, the position taken by the petitioner and the petitioner's interest in sufficient factual detail to demonstrate either that the petitioner has a right to participate because it is a State Commission; that it has or represents an interest which may be directly affected by the outcome of the proceeding, including any interest as a consumer, customer, competitor, or security holder of a party to the proceeding; or that the petitioner's participation is in the public interest.

A final decision will be made on this application after a determination is made by the DOE that the proposed transaction will not impair the sufficiency of electric supply within the United States or impede or tend to impede the coordination in the public interest of facilities subject to the jurisdiction of the DOE.

Before an export authorization may be issued or amended, the environmental impacts of the proposed DOE action must be evaluated pursuant to the National Environmental Policy Act of 1969.

Copies of this application will be made available, upon request, for public inspection and copying at the Department of Energy, room 3F–056, Forrestal Building, 1000 Independence Avenue, SW., Washington, DC, from 9 a.m. to 4 p.m., Monday through Friday.

Issued in Washington, D.C. on December 7, 1993.

Anthony J. Como,

Director, Office of Coal & Electricity, Office of Fuels Programs, Office of Fossil Energy.

[FR Doc. 93–30372 Filed 12–10–93; 8:45 am]

BILLING CODE 6450–01–P

Federal Energy Regulatory Commission

[Docket No. ER94–189–000, et al.]

New York State Electric & Gas Corp., et al.; Electric Rate, Small Power Production, and Interlocking Directorate Filings

December 7, 1993.

Take notice that the following filings have been made with the Commission:

1. New York State Electric & Gas Corporation

[Docket No. ER94–189–000]

Take notice that on November 26, 1993, New York State Electric & Gas Corporation (NYSEG) tendered for filing pursuant to § 35.12 of the Federal Energy Regulatory Commission's Regulations, 18 CFR 35.12, as an Initial Rate Schedule, an agreement with Delaware County Electric Cooperative, Inc. (Cooperative). The agreement provides for Cooperative's payments to NYSEG associated with NYSEG's efforts to operate, maintain, repair, and replace Substation Facilities required by the Cooperative and owned by NYSEG within the Axtell Road Substation. NYSEG requests an effective date of June 1, 1977, and, therefore, requests waiver of the Commission's notice requirements for good cause shown.

NYSEG states that a copy of this filing has been served by mail upon Cooperative and upon the Public Service Commission of New York.

Comment date: December 21, 1993, in accordance with Standard Paragraph E at the end of this notice.

2. Commonwealth Electric Company, Boston Edison Company, Montaup Electric Company

[Docket No. ER94–184–000]

Take notice that on November 24, 1993, Commonwealth Electric Company (Commonwealth) tendered for filing on behalf of itself, Montaup Electric Company and Boston Edison Company supplemental data pertaining to their applicable investments, and carrying charges including local tax rates, for the twelve-month period ending December 31, 1992. Commonwealth states that this supplemental data is submitted pursuant to a letter in Docket No. E–7981 dated April 26, 1973, accepting for filing Commonwealth's Rate Schedule FERC No. 21, Boston Edison Company's Rate Schedule FERC No. 67, and Montaup Electric Company's Rate Schedule No. 27.

Commonwealth states that these rate schedules have previously been similarly supplemented for the calendar years 1972 through 1991.

Copies of said filing have been served upon Boston Edison Company, Montaup Electric Company, New England Power Company and the Massachusetts Department of Public Utilities.

Comment date: December 21, 1993, in accordance with Standard Paragraph E at the end of this notice.

3. Northern States Power Company (Minnesota)

[Docket No. ER94–112–000]

Take notice that on November 29, 1993, Northern States Power Company tendered for filing an executed copy of Supplement No. 1 to the System Control and Load Dispatching Agreement between NSP and Cooperative Power Association in the above-referenced docket.

Comment date: December 21, 1993, in accordance with Standard Paragraph E at the end of this notice.

4. Wisconsin Public Service Corporation

[Docket No. ER94–182–000]

Take notice that on November 23, 1993, Wisconsin Public Service Corporation (WPSC) tendered for filing a new supplement to the existing Service Agreement between WPSC and Consolidated Water Power Company.

Comment date: December 21, 1993, in accordance with Standard Paragraph E at the end of this notice.

5. ESBI Energy O&M, Inc.

[Docket No. EG94–8–000]

On November 30, 1993, ESBI Energy O&M, Inc. ("ESBI"), a Delaware corporation, whose address is 10235 West Little York, Suite 430, Houston, Texas 77040, filed with the Federal Energy Regulatory Commission an application for determination of exempt wholesale generator status pursuant to part 365 of the Commission's regulations.

ESBI intends to operate an approximate 300 MW natural gas and oil-fired simple cycle peaking independent power production facility to be located near Hartwell, Hart County, Georgia (the "Facility"). The Facility is currently under development and will be owned by Hartwell Energy Limited Partnership ("Hartwell"). Electric energy produced by the Facility will be sold by Hartwell to Oglethorpe Power Corporation at wholesale.

Comment date: December 30, 1993, in accordance with Standard Paragraph E at the end of this notice.

6. Iowa Southern Utilities Company

[Docket No. ER94–181–000]

Take notice that Iowa Southern Utilities Company (ISU) on November 22, 1993, tendered for filing an Electric Service Agreement, dated May 30, 1989, between ISU and the City of Mount Pleasant, Iowa, and an Electric Service Agreement, dated July 17, 1989, between ISU and the City of Bloomfield, Iowa. Electrical service under these Agreements will be provided pursuant to ISU's FERC Electric Tariff and Rate No. 52 for Interruptible Wholesale Power. Both agreements were submitted pursuant to the amnesty provisions contained in the Final Order in docket PL93–2–002.

A copy of the filing was served upon Iowa State Utilities Board, Mount Pleasant and Bloomfield.

Comment date: December 21, 1993, in accordance with Standard Paragraph E at the end of this notice.

7. Washington Water Power Company

[Docket No. ER94–183–000]

Take notice that on November 23, 1993, The Washington Water Power Company (WWP), on behalf of itself and The Montana Power Company (MPC), tendered for filing with the Federal Energy Regulatory Commission pursuant to 18 CFR 35.11 a First Amendment to the Transmission Service Agreement (Amendment) between WWP and MPC.

A copy of the filing was served upon MPC.

Comment date: December 21, 1993, in accordance with Standard Paragraph E at the end of this notice.

8. Upper Peninsula Power Company

[Docket No. ER94–187–000]

Take notice that on November 24, 1993, Upper Peninsula Power Company (UPPCO) tendered for filing a Transmission Maintenance Agreement between UPPCO and Wisconsin Electric Power Company (WEPCO), pursuant to which UPPCO performs maintenance services on certain transmission facilities owned by WEPCO in the Upper Peninsula of Michigan.

UPPCO has stated that its filing is being made pursuant to the Final Order and the Appendix thereto issued July 30, 1993 in Prior Notice and Filing Requirements Under Part II of the Federal Power Act, Docket No. PL93–2–000. UPPCO requests that the FERC disclaim jurisdiction over the Transmission Maintenance Agreement or, in the alternative, that the FERC accept the Transmission Maintenance Agreement for filing and permit it to be made effective as a rate schedule as of January 1, 1988.

Comment date: December 21, 1993, in accordance with Standard Paragraph E at the end of this notice.

9. Upper Peninsula Power Company

[Docket No. ER94–188–000]

Take notice that on November 24, 1993, Upper Peninsula Power Company (UPPCO) tendered for filing a Presque Isle Power Plant Operating Agreement between UPPCO and Wisconsin Electric Power Company (WEPCO), pursuant to which UPPCO operates the Presque Isle Power Plant, a nine-unit coal-fired generating plant owed by WEPCO at Marquette, Michigan.

UPPCO has stated that its filing is being made pursuant to the Final Order and the Appendix thereto issued July 30, 1993, in *Prior Notice and Filing Requirements Under Part II of the Federal Power Act*, Docket No. PL93–2–000. UPPCO requests that the FERC disclaim jurisdiction over the Presque Isle Power Plant Operating Agreement for filing and permit it to be made effective as a rate schedule as of August 1, 1990.

Comment date: December 21, 1993, in accordance with Standard Paragraph E at the end of this notice.

10. United Illuminating Company

[Docket No. ER93–3–003]

Take notice that on November 5, 1993, United Illuminating Company (UI) tendered for filing corrected versions of Appendices B and C to its compliance filing filed on June 17, 1993, in the above-referenced docket.

Comment date: December 21, 1993, in accordance with Standard Paragraph E at the end of this notice.

11. Idaho Power Company

[Docket No. ER94–114–000]

Take notice that on November 24, 1993, Idaho Power Company (Idaho) tendered for filing a Certificate of Concurrence to Idaho's Exchange Agreement filed in the above-referenced docket.

Comment date: December 21, 1993, in accordance with Standard Paragraph E at the end of this notice.

Standard Paragraphs

E. Any person desiring to be heard or to protest said filing should file a motion to intervene or protest with the Federal Energy Regulatory Commission, 825 North Capitol Street, NE., Washington, DC. 20426, in accordance with Rules 211 and 214 of the Commission's Rules of Practice and Procedure (18 CFR 385.211 and 18 CFR 385.214). All such motions or protests should be filed on or before the comment date. Protests will be considered by the Commission in determining the appropriate action to be taken, but will not serve to make protestants parties to the proceeding. Any person wishing to become a party must file a motion to intervene. Copies of this filing are on file with the Commission and are available for public inspection.

Lois D. Cashell,

Secretary.

[FR Doc. 93–30347 Filed 12–10–93; 8:45 am]

BILLING CODE 6717–01–P

[Project Nos. 11445–000, *et al.*]

Hydroelectric Applications; Adirondack Hydro Development Corp. et al.

Take notice that the following hydroelectric applications have been filed with the Commission and are available for public inspection:

1a. Type of Application: Preliminary Permit.

b. Project No.: 11445–000.

c. Date Filed: November 2, 1993.

d. Applicant: Adirondack Hydro Development Corporation.

e. Name of Project: Delta Dam Hydroelectric Project.

f. Location: On the Mohawk River in the city of Rome in Oneida County, New York.

g. Filed Pursuant to: Federal Power Act 17 U.S.C. 791(a)–825(r).

h. Contact Person: Wilbur W. Krueger, Adirondack Hydro Development Corporation, Civic Center Plaza, suite 100, 5 Warren Street, Glen Falls, NY 12801, 518 761–3085.

i. FERC Contact: Mike Dees, (202) 219–2807.

j. Comment Date: January 27, 1994.

k. Description of Project: The proposed project would consist of: (1) An existing concrete gravity dam 1,016 feet long; (2) an existing 2,700 acre impoundment with 64,280 acre-feet of storage; (3) a proposed intake structure; (4) a proposed 12 foot diameter penstock; (5) a proposed underground powerhouse containing one hydropower unit with a capacity of 3,400 Kw; (6) a proposed tailrace; (7) a proposed 13.2 Kv transmission line 1,000 feet long; and (8) appurtenant facilities. The estimated annual energy production is 12.3 Gwh. Project power would be sold to Niagara Mohawk Power Corporation. Applicant estimates that the cost of the work to be performed under the preliminary permit would be $125,000.

l. This notice also consists of the following standard paragraphs: A5, A7, A9, A10, B, C, and D2.

2a. Type of Application: Declaration of Intention.

b. Docket No.: EL94–7–000.

c. Date Filed: October 29, 1993.

d. Applicant: Yesteryear Power & Equipment.

e. Name of Project: Brooklyn Dam Project (MI).

f. Location: Raisin River, Jackson County, Village of Brooklyn, Michigan.

g. Filed Pursuant to: Section 23(b) of the Federal Power Act, 16 U.S.C. 817(b).

h. Applicant Contact: Mr. Lee R. Keopke, Yesteryear Power and Equipment, 221 Mill Street, P.O. Box 217, Brooklyn, MI 49330, (517) 592–3373; Dana M. Dougherty, Ayres, Lewis, Norris & May, Inc., 3949 Research Park Drive, Ann Arbor, MI 48108, (313) 761–1010.

i. FERC Contact: Hank Ecton, (202) 219–2678.

j. Comment Date: January 7, 1994.

k. Description of Project: The proposed Brooklyn Dam Project will consist of: (1) An existing reservoir of 120 acres; (2) an existing 450-foot-long, 22.5 foot-high earthen dam with an unregulated 32-foot-wide concrete spillway; (3) a proposed Francis-type turbine and generator unit, generating approximately 50 KVA; and (4) appurtenant facilities.

When a Declaration of Intention is filed with the Federal Energy Regulatory Commission, the Federal Power Act requires the Commission to investigate and determine if the interests of interstate or foreign commerce would be affected by the project. The Commission also determines whether the project: (1) Would be located on a navigable waterway; (2) would occupy or affect public lands or reservations of the United States; (3) would utilize surplus water or water power from a government dam; or (4) if applicable, has involved or would involve any construction subsequent to 1935 that may have increased or would increase the project's head or generating capacity, or have otherwise significantly modified the project's pre-1935 design or operation.

l. Purpose of Project: Applicant intends to use energy produced at the

Yesteryear Museum and grounds, as part of the exhibits. Additional power requirements would be purchased from Consumers Power System as necessary.

m. This notice also consists of the following standard paragraphs: B, C1, and D2.

3a. Type of Application: Amendment of License.

b. Project No.: 3017–014.

c. Dated Filed: November 9, 1993.

d. Applicant: Armstrong-Keta, Inc.

e. Name of Project: Jetty Lake.

f. Location: The project is located on Jetty Lake in the borough of Sitka, Alaska.

g. Filed Pursuant to: Federal Power Act, 16 U.S.C. 791(a)–825(r).

h. Applicant Contact: R. Bartlett Watson, Executive Director, Armstrong-Keta, Inc., P.O. Box 21990, Juneau, Alaska 99802, (907) 586–3443.

i. FERC Contact: Buu T. Nguyen, (202) 219–2913.

j. Comment Date: January 12, 1994.

k. Description of Amendment: Armstrong-Keta, Inc. applied for an amendment of license to increase the project's installed capacity from 50 Kw to 230 Kw, and the hydraulic capacity from 5 cfs to 15 cfs. The increase is needed to allow for the additional electric power that will be available to the hatchery, and the expanded fish processing facilities.

l. This notice also consists of the following standard paragraphs: B, C1, and D2.

4a. Type of Application: Transfer of License.

b. Project No.: 6221–029.

c. Dated Filed: October 27, 1993.

d. Applicant: Black Creek Hydro, Inc. and Puget Sound Power and Light Company.

e. Name of Project: Black Creek Hydro Project.

f. Location: On Black Creek, King County, Washington.

g. Filed Pursuant to: Federal Power Act, 16 U.S.C. 791(a)–825(r).

h. Applicant Contact: Martin W. Thompson, Vice President, Black Creek Hydro, Inc., Suite 310, 19515 North Creek Parkway, Bothell, WA 98011, (206) 487–6541; R. G. Bailey, Vice President, Power Systems, Puget Sound Power and Light Company, 10608 N. E. 4th, Bellevue, WA 98004, (206) 462–3720.

i. FERC Contact: Patricia Massie, (202) 219–2681.

j. Comment Date: January 12, 1994.

k. Description of Transfer: Black Creek Hydro, Inc. (transferor), licensee for the Black Creek Hydro Project, and Puget Sound Power and Light Company (transferee) jointly and severally apply for written approval for the transfer of the project license from the transferor to the transferee. The purpose of the proposed transfer is to enable the transferee to assume ownership and operation of the project in conjunction with its other operating facilities.

l. This notice also consists of the following standard paragraphs: B, C1, and D2.

5a. Type of Application: Preliminary Permit.

b. Project No.: 11436–000.

c. Date Filed: September 22, 1993.

d. Applicant: Opekiska Hydro Associates.

e. Name of Project: Opekiska.

f. Location: On the Monongahela River in Marion County, West Virginia.

g. Filed Pursuant to: Federal Power Act 16 U.S.C. §§ 791 (a)–825(r).

h. Applicant Contact: V. James Dunlevy, 185 Genesee Street, Suite 1518, Utica, NY 13501, (315) 793–0366.

i. FERC Contact: Charles T. Raabe (tag), (202) 219–2811.

j. Comment Date: January 31, 1994.

k. Description of Project: The proposed project would utilize the existing Corps of Engineers' Opekiska Dam and Reservoir and would consist of: (1) A replacement for a portion of the old lock wall on the left abutment of the existing dam; (2) a powerhouse containing one 5 MW horizontal pit turbine-generator; (3) 4.16 kV generator leads; (4) 4.16/25-kV, 7/13 MVA transformer; (5) a 4,400-foot-long transmission line; and (6) appurtenant facilities.

Applicant estimates that the average annual generation would be 17,100 MWh and that the cost of the studies under the permit would be $75,000.

l. This notice also consists of the following standard paragraphs: A5, A7, A9, A10, B, C, D2.

6a. Type of Application: Surrender of Exemption.

b. Project No.: 9548–006.

c. Date Filed: August 29, 1993.

d. Applicant: Rhyne Mills, Inc.

e. Name of Project: Rhyne Mills No. 1.

f. Location: South Fork Catawba River, Lincoln County, North Carolina.

g. Filed Pursuant to: Federal Power Act 16 U.S.C. 791(a)–825(r).

h. Applicant Contact: Mr. Johnathan L. Rhyne, Jr., Chairman of the Board, South Fork Holdings, Inc., P.O. Box 70, Lincolnton, NC 28093–0070 (704) 732–5560.

i. FERC Contact: Hank Ecton (202) 219–2678.

j. Comment Date: January 20, 1994.

k. Description of Project Action: The exemption for this project, with a proposed capacity of 400 kilowatts (kW), was issued on June 30, 1986. The exemptee proposed to utilize an existing dam and powerhouse, and to install a 400-kW Francis generator.

The exemptee states that the project is not economically feasible at this time.

l. This notice also consists of the following standard paragraphs: B, C1, and D2.

7a. Type of Application: Subsequent License.

b. Project No.: 2438–007.

c. Date Filed: November 5, 1993.

d. Applicant: Seneca Falls Power Corporation.

e. Name of Project: Waterloo and Seneca Falls Project.

f. Location: On the Seneca River in Seneca County, New York.

g. Filed Pursuant to: Federal Power Act 16 U.S.C. 791 (a)–825(r).

h. Applicant Contact: Mr. Patrick Oot, President, Seneca Falls Power Corporation, 4450 Swissvale Drive, Manlius, NY 13104, (315) 637–4761.

i. FERC Contact: Robert Bell (202) 219–2806.

j. Comment Date: 60 days from the filing date in paragraph C. (January 4, 1994).

k. Description of Project: The proposed project consists of the following two developments:

Seneca Falls Development

(1) The existing 68-foot-high, 118-foot-long dam; (2) having an impoundment with a surface area of 135 acres with a storage capacity of 2,700 acre-feet, and a normal water surface elevation of 430.5 feet Barge Canal Datum (BCD); (3) an existing intake structure; (4) the existing powerhouse having 4 generating units with a total proposed capacity of 8,500-kW; (5) the existing tailrace; (6) the existing 300-foot-long, 34.5-kV transmission line; and (7) appurtenant facilities.

Waterloo Development

(1) The existing 16.5-foot-high, 251-foot-long dam; (2) having an impoundment with a surface area of 1.1 acre with negligible storage, and a normal water surface elevation of 446.3 feet BCD; (3) an existing intake structure; (4) the existing powerhouse having 4 generating units with a total proposed capacity of 2,260-kW; (5) the existing tailrace; (6) the existing 20-foot-long, 34.5-kV transmission; and (7) appurtenant facilities.

l. With this notice, we are initiating consultation with the New York State Historic Preservation Officer (SHPO), as required by sec. 106, National Historic Preservation Act, and the regulations of the Advisory Council on Historic Preservation, 36 CFR, at 800.4.

m. Pursuant to § 4.32(b)(7) of 18 CFR of the Commission's regulations, if any resource agency, Indian Tribe, or person believes that an additional scientific study should be conducted in order to form an adequate factual basis for a complete analysis of the application on its merit, the resource agency, Indian Tribe, or person must file a request for a study with the Commission not later than 60 days from the filing date and serve a copy of the request on the applicant.

Standard Paragraphs

A5. Preliminary Permit—Anyone desiring to file a competing application for preliminary permit for a proposed project must submit the competing application itself, or a notice of intent to file such an application, to the Commission on or before the specified comment date for the particular application (see 18 CFR 4.36). Submission of a timely notice of intent allows an interested person to file the competing preliminary permit application no later than 30 days after the specified comment date for the particular application. A competing preliminary permit application must conform with 18 CFR 4.30(b) (1) and (9) and 4.36.

A7. Preliminary Permit—Any qualified development applicant desiring to file a competing development application must submit to the Commission, on or before a specified comment date for the particular application, either a competing development application or a notice of intent to file such an application. Submission of a timely notice of intent to file a development application allows an interested person to file the competing application no later than 120 days after the specified comment date for the particular application. A competing license application must conform with 18 CFR 4.30(b) (1) and (9) and 4.36.

A9. Notice of intent—A notice of intent must specify the exact name, business address, and telephone number of the prospective applicant, and must include an unequivocal statement of intent to submit, if such an application may be filed, either a preliminary permit application or a development application (specify which type of application). A notice of intent must be served on the applicant(s) named in this public notice.

A10. Proposed Scope of Studies under Permit—A preliminary permit, if issued, does not authorize construction. The term of the proposed preliminary permit with be 36 months. The work proposed under the preliminary permit would include economic analysis, preparation of preliminary engineering plans, and a study of environmental impacts. Based on the results of these studies, the Applicant would decide whether to proceed with the preparation of a development application to construct and operate the project.

B. Comments, Protests, or Motions to Intervene—Anyone may submit comments, a protest, or a motion to intervene in accordance with the requirements of the Rules of Practice and Procedure, 18 CFR 385.210, .211, .214. In determining the appropriate action to take, the Commission will consider all protests or other comments filed, but only those who file a motion to intervene in accordance with the Commission's Rules may become a party to the proceeding. Any comments, protests, or motions to intervene must be received on or before the specified comment date for the particular application.

C. Filing and Service of Responsive Documents—Any filings must bear in all capital letters the title "Comments", "Notice of Intent to File Competing Application", "Competing Application", "Protest", "Motion to Intervene", as applicable, and the Project Number of the particular application to which the filing refers. Any of the above-named documents must be filed by providing the original and the number of copies provided by the Commission's regulations to: The Secretary, Federal Energy Regulatory Commission, 825 North Capitol Street, NE., Washington, DC 20426. An additional copy must be sent to Director, Division of Project Review, Federal Energy Regulatory Commission, room 1027, at the above-mentioned address. A copy of any notice of intent, competing application or motion to intervene must also be served upon each representative of the Applicant specified in the particular application.

C1. Filing and Service of Responsive Documents—Any filings must bear in all capital letters the title "Comments", "Recommendations for Terms and Conditions", "Protest", or "Motion to intervene", as applicable, and the Project Number of the particular application to which the filing refers. Any of the above-named documents must be filed by providing the original and the number of copies provided by the Commission's regulations to: The Secretary, Federal Energy Regulatory Commission, 825 North Capitol Street, NE., Washington, DC 20426. A copy of any motion to intervene must also be served upon each representative of the Applicant specified in the particular application.

D2. Agency Comments—Federal, state, and local agencies are invited to file comments on the described application. A copy of the application may be obtained by agencies directly from the Applicant. If an agency does not file comments within the time specified for filing comments, it will be presumed to have no comments. One copy of an agency's comments must also be sent to the Applicant's representatives.

Dated: December 7, 1993, Washington, DC.

Lois D. Cashell,

Secretary.

[FR Doc. 93–30301 Filed 12–10–93; 8:45 am]

BILLING CODE 6717–01–P

[Docket No. CP94–115–000, et al.]

Columbia Gas Transmission Co., et al.; Natural Gas Certificate Filings

December 7, 1993.

Take notice that the following filings have been made with the Commission:

1. Columbia Gas Transmission Corporation

[Docket No. CP94–115–000]

Take notice that on December 1, 1993, Columbia Gas Transmission Corporation (Columbia), 1700 MacCorkle Avenue, SE., Charleston, West Virginia 25314, filed in Docket No. CP94–115–000 a request pursuant to §§ 157.205 and 157.211 (18 CFR 157.205 and 157.211) of the Commission's Regulations under the Natural Gas Act (NGA), and Columbia's authorization in Docket No. CP83–76–000 seeking NGA section 7 certification to operate a new delivery point for transportation service under part 284 of 18 CFR to Ohio Cumberland Gas Company (OCG), in Holmes County, Ohio, all as more fully set forth in the request on file with the Commission and open to public inspection.

Columbia requests authorization to construct and operate a new point of delivery (POD) for transportation services, as follows:

Buyer	Rate schedule	MDQ (Dth/d)	Annual quantity (Dth)
OCG	ITS	100	36,500

Columbia states that the new POD was previously requested by OCG for interruptible transportation service under Rate Schedule ITS for commercial and industrial use to be provided under Columbia's blanket certificate issued in Docket No. CP86–240–000 under Subpart B, of the Commission's regulations and existing authorized

entitlements.[1] It is stated that Columbia is currently in the process of installing the POD under section 311 of the NGA to provide the requested service.

Columbia further states that it will comply with all of the environmental requirements of § 157.206(d) prior to the construction.

Comment date: January 21, 1994, in accordance with Standard Paragraph G at the end of this notice.

2. Arkla Energy Resources Company

[Docket No. CP94–107–000]

Take notice that on November 24, 1993, Arkla Energy Resources Company (AER), P.O. Box 21734, Shreveport, Louisiana 71151, filed in Docket No. CP94–107–000 an application pursuant to section 7(b) of the Natural Gas Act for permission and approval to abandon and transfer by sale to BCF Gas Ltd. (BCF) certain facilities and equipment in Arkansas, all as more fully set forth in the application on file with the Commission and open to public inspection.

AER proposes to abandon and transfer to BCF the following: AER's Line L–154 (approximately 7,292 feet of 6-inch pipe); Line L-174 (approximately 15,242 feet of 8-inch pipe; Dorcheat Compressor Station (consisting of a station lot, 530-hp compressor, meter and appurtenant equipment); and Macedonia Compressor Station (consisting of a station lot, 530-hp compressor, meter and appurtenant equipment), all located in Arkansas.

AER states that pursuant to an agreement it has transferred to BCF gathering facilities in the same areas and, upon receipt of the requested abandonment, would transfer the above facilities to BCF. The abandonment would not impair any services and BCF would continue to gather and deliver gas from the connected fields through the facilities.

Comment date: December 28, 1993, in accordance with Standard Paragraph F at the end of this notice.

Standard Paragraphs

F. Any person desiring to be heard or to make any protest with reference to said application should on or before the comment date, file with the Federal Energy Regulatory Commission, Washington, DC 20426, a motion to intervene or a protest in accordance with the requirements of the Commission's Rules of Practice and Procedure (18 CFR 385.214 or 385.211) and the Regulations under the Natural Gas Act (18 CFR 157.10). All protests filed with the Commission will be considered by it in determining the appropriate action to be taken but will not serve to make the protestants parties to the proceeding. Any person wishing to become a party to a proceeding or to participate as a party in any hearing therein must file a motion to intervene in accordance with the Commission's Rules.

Take further notice that, pursuant to the authority contained in and subject to the jurisdiction conferred upon the Federal Energy Regulatory Commission by sections 7 and 15 of the Natural Gas Act and the Commission's Rules of Practice and Procedure, a hearing will be held without further notice before the Commission or its designee on this application if no motion to intervene is filed within the time required herein, if the Commission on its own review of the matter finds that a grant of the certificate and/or permission and approval for the proposed abandonment are required by the public convenience and necessity. If a motion for leave to intervene is timely filed, or if the Commission on its own motion believes that a formal hearing is required, further notice of such hearing will be duly given.

Under the procedure herein provided for, unless otherwise advised, it will be unnecessary for applicant to appear or be represented at the hearing.

G. Any person or the Commission's staff may, within 45 days after issuance of the instant notice by the Commission, file pursuant to rule 214 of the Commission's Procedural Rules (18 CFR 385.214) a motion to intervene or notice of intervention and pursuant to § 157.205 of the Regulations under the Natural Gas Act (18 CFR 157.205) a protest to the request. If no protest is filed within the time allowed therefor, the proposed activity shall be deemed to be authorized effective the day after the time allowed for filing a protest. If a protest is filed and not withdrawn within 30 days after the time allowed for filing a protest, the instant request shall be treated as an application for authorization pursuant to section 7 of the Natural Gas Act.

Lois D. Cashell,

Secretary.

[FR Doc. 93–30348 Filed 12–10–93; 8:45 am]

BILLING CODE 6717–01–P

[Project No. 11098–001 Idaho]

Ida-West Energy Co.; Surrender of Preliminary Permit

December 7, 1993.

Take notice that Ida-West Energy Company, Permittee for the Hollister Project No. 11098, has requested that its preliminary permit be terminated. The preliminary permit for Project No. 11098 was issued June 25, 1991, and would have expired May 31, 1994. The project would have been located on lands administered by the Bureau of Land Management, on the Salmon Falls Creek in Twin Falls County, Idaho.

The Permittee filed the request on November 22, 1993, and the preliminary permit for Project No. 11098 shall remain in effect through the thirtieth day after issuance of this notice unless that day is a Saturday, Sunday or holiday as described in 18 CFR 385.2007, in which case the permit shall remain in effect through the first business day following that day. New applications involving this project site, to the extent provided for under 18 CFR part 4, may be filed on the next business day.

Lois D. Cashell,

Secretary.

[FR Doc. 93–30300 Filed 12–10–93; 8:45 am]

BILLING CODE 6717–01–P

[Docket Nos. RP93–14–000, RP93–126–000, RP87–14–000, RP86–41–000, et al.]

Algonquin Gas Transmission Co.; Informal Settlement Conference

December 7, 1993.

Take notice that an informal settlement conference will be convened in these proceedings on December 14, 1993, at 10 a.m. at the offices of the Federal Energy Regulatory Commission, 810 First Street, NE., Washington, DC, 20426, for the purpose of exploring the possible settlement of the issues in this proceeding.

Any party, as defined by 18 CFR 385.102(c), or any participant as defined by 18 CFR 385.102(b), is invited to attend. Persons wishing to become a party must move to intervene and receive intervenor status pursuant to the Commission's regulations (18 CFR 385.214).

For additional information, contact Marc G. Denkinger (202) 208–2215 or David R. Cain (202) 208–0917.

Lois D. Cashell,

Secretary.

[FR Doc. 93–30299 Filed 12–10–93; 8:45 am]

BILLING CODE 6717–01–M

---

[1] *Texas Eastern Transmission Corporation*, 62 FERC Paragraph 61,196 at p. 62,390–391 (1993).

Office of Fossil Energy

[Docket No. FE–R–79–43B]

Electric and Gas Utilities Covered in 1994 by Titles I and III of the Public Utility Regulatory Policies Act of 1978 and Requirements for State Regulatory Authorities to Notify the Department of Energy

AGENCY: Office of Fossil Energy, Department of Energy.

ACTION: Notice.

SUMMARY: Sections 102(c) and 301(d) of the Public Utility Regulatory Policies Act of 1978 (PURPA) require the Secretary of Energy to publish a list, before the beginning of each calendar year, identifying each electric utility and gas utility to which Titles I and III of PURPA apply during such calendar year. The 1994 list is published here as two separate tabulations. Appendix A lists the covered utilities by State, and Appendix B lists them alphabetically.

Each State regulatory authority is required, pursuant to sections 102(c) and 301(d) of PURPA, to notify the Secretary of Energy of each electric utility and gas utility on the list for which such State regulatory authority has ratemaking authority. In addition, written comments are requested on the accuracy of the list of electric utilities and gas utilities.

DATE: Notifications by State regulatory authorities and written comments must be received by no later than 4:30 p.m. on February 15, 1994.

ADDRESSES: Notifications and written comments should be forwarded to: Department of Energy, Office of Coal and Electricity, FE–52, 1000 Independence Avenue, SW., Room 3F–070, Docket No. FE–R–79–43B, Washington, DC 20585.

FOR FURTHER INFORMATION CONTACT: Steven Mintz, Office of Coal and Electricity, Fossil Energy, Department of Energy, 1000 Independence Avenue SW., Room 3F–070, FE–52, Washington, DC 20585, Telephone 202/586–9506

SUPPLEMENTARY INFORMATION:

I. Background

Pursuant to sections 102(c) and 301(d) of PURPA, Pub. L. 95–617, 92 Stat. 3117 *et seq.* (16 U.S.C. 2601 *et seq.*, hereinafter referred to as the Act) the Department of Energy (DOE) is required to publish a list of utilities to which Titles I and III of PURPA apply in 1994.

State regulatory authorities are required by the Act to notify the Secretary of Energy as to their ratemaking authority over the listed utilities. The inclusion or exclusion of any utility on or from the list does not affect the legal obligations of such utility or the responsible authority under the Act.

The term "State regulatory authority" means any State, including the District of Columbia and Puerto Rico, or a political subdivision thereof, and any agency or instrumentality, which has authority to fix, modify, approve, or disapprove rates with respect to the sale of electric energy or natural gas by any utility (other than such State agency). In the case of a utility for which the Tennessee Valley Authority (TVA) has ratemaking authority, the term "State regulatory authority" means the TVA.

Title I of PURPA sets forth ratemaking and regulatory policy standards with respect to electric utilities. Section 102(c) of Title I requires the Secretary of Energy to publish a list, before the beginning of each calendar year, identifying each electric utility to which Title I applies during such calendar year. An electric utility is defined as any person, State agency, or Federal agency that sells electric energy. An electric utility is covered by Title I for any calendar year if it had total sales of electric energy, for purposes other than resale, in excess of 500 million kilowatt-hours during any calendar year beginning after December 31, 1975, and before the immediately preceding calendar year. An electric utility is covered in 1994 if it exceeded the threshold in any year from 1976 through 1992.

Title III of PURPA addresses ratemaking and other regulatory policy standards with respect to natural gas utilities. Section 301(d) of Title III requires the Secretary of Energy to publish a list, before the beginning of each calendar year, identifying each gas utility to which Title III applies during such calendar year. A gas utility is defined as any person, State agency, or Federal agency, engaged in the local distribution of natural gas and the sale of natural gas to any ultimate consumer of natural gas. A gas utility is covered by Title III if it had total sales of natural gas, for purposes other than resale, in excess of 10 billion cubic feet during any calendar year beginning after December 31, 1975, and before the immediately preceding calendar year. A gas utility is covered in 1994 if it exceeded the threshold in any year from 1976 through 1992.

In compiling the list published today, the DOE revised the 1993 list (58 FR 94, January 4, 1993) upon the assumption that all entities included on the 1993 list are properly included on the 1994 list unless the DOE has information to the contrary. In doing this, the DOE took into account information included in public documents regarding entities which exceeded the PURPA thresholds for the first time in 1992. The DOE believes that it will become aware of any errors or omissions in the list published today by means of the comment process called for by this Notice. The DOE will, after consideration of any comment and other information available to the DOE, provide written notice of any further additions or deletions to the list.

II. Notification and Comment Procedures

No later than 4:30 p.m. on February 15, 1994, each State regulatory authority must notify the DOE in writing of each utility on the list over which it has ratemaking authority. Two copies of such notification should be submitted to the address indicated in the **ADDRESS** section of this Notice and should be identified on the outside of the envelope and on the document with the designation "Docket No. FE–R–79–43B." Such notification should include:

1. A complete list of electric utilities and gas utilities over which the State regulatory authority has ratemaking authority;
2. legal citations pertaining to the ratemaking authority of the State regulatory authority; and
3. for any listed utility known to be subject to other ratemaking authorities within the State for portions of its service area, a precise description of the portion to which such notification applies.

All interested persons, including State regulatory authorities, are invited to comment in writing, no later than 4:30 p.m. on February 15, 1994, on any errors or omissions with respect to the list. Two copies of such comments should be sent to the address indicated in the **ADDRESSES** section of this Notice and should be identified on the outside of the envelope and on the document with the designation "Docket No. FE–R–79–43B." Written comments should include the commenter's name, address, and telephone number.

All notifications and comments received by the DOE will be made available, upon request, for public inspection in the Freedom of Information Reading Room, room 1E–190, 1000 Independence Avenue SW., Washington, DC 20585, between the hours of 9 a.m. and 4 p.m., Monday through Friday, except Federal holidays.

III. List of Electric Utilities and Gas Utilities

Appendices A and B contain two different tabulations of the utilities that

meet PURPA coverage requirements. As stated above, the inclusion or exclusion of any utility on or from the lists does not affect its legal obligations or those of the responsible State regulatory authority under PURPA.

Appendix A contains a list of utilities which are covered by PURPA. These utilities are grouped by State and by the regulatory authority within each State. Also included in this list are utilities which are covered by PURPA but which are not regulated by the State regulatory authority. This tabulation, including explanatory notes, is based on information provided to the DOE by State regulatory authorities in response to the January 4, 1993, **Federal Register** notice (58 FR 94) requiring each State regulatory authority to notify the DOE of each utility on the list over which it has ratemaking authority, public comments received with respect to that notice, and information subsequently made available to the DOE.

The utilities classified in Appendix A as not regulated by the State regulatory authority in fact may be regulated by local municipal authorities. These municipal authorities would be State agencies as defined by PURPA and thus have responsibilities under PURPA identical to those of the State regulatory authority. Therefore, each such municipality is to notify the DOE of each utility on the list over which it has ratemaking authority.

In appendix B, the utilities are listed alphabetically, subdivided into electric utilities and gas utilities, and further subdivided by type of ownership: investor-owned utilities, publicly-owned utilities, and rural cooperatives.

The changes to the 1993 list of electric and gas utilities are as follows:

Additions

Cheyenne Light, Fuel and Power Company (WY)
Choptank Electric Cooperative, Inc. (MD)
City of Kaukauna Electric and Water Department (WI)
City of Menasha Electric and Water Utilities (WI)
Delaware Electric Cooperative, Inc. (DL)
Dickson Electric Department (TN)
EnergyNorth Natural Gas, Inc. (NH)
Getty Gas Gathering, Inc. (KS)
Mountain Fuel Supply (ID)
Ozarks Electric Cooperative Corporation (AR)
Paducah Power System (KY)
Wallingford DPU—Electric Division (CT)

(Public Utility Regulatory Policies Act of 1978, Pub. L. 95–617, 92 Stat. 3117 *et seq.* (16 U.S.C. 2601 *et seq.*))

Issued in Washington, DC on December 1, 1993.

Anthony J. Como,

Director, Office of Coal and Electricity, Office of Fuels Programs, Office of Fossil Energy.

Appendix A

All gas utilities listed below had natural gas sales, for purposes other than resale, in excess of 10 billion cubic feet in any year from 1976–1992.

All electric utilities listed below had electric energy sales, for purposes other than resale, in excess of 500 million kilowatt-hours in any year from 1976–1992.

State: Alabama

Regulatory Authority: Alabama Public Service Commission.

Gas Utilities

Investor-Owned:
Alabama Gas Corporation
Mobile Gas Service Corporation

Electric Utilities

Investor-Owned:
Alabama Power Company
The following covered utilities within the State of Alabama are not regulated by the Alabama Public Service Commission:

Electric Utilities

Publicly-Owned:
Athens Utilities
Decatur Electric Department
Dothan Electric Department
Florence Electric Department
Huntsville Utilities
Rural Electric Cooperatives:
Cullman Electric Cooperative
Joe Wheeler Electric Membership Corporation
Rural Electric System

State: Alaska

Regulatory Authority: Alaska Public Utilities Commission.

Gas Utilities

Investor-Owned:
Enstar Natural Gas Company

Electric Utilities

Rural Electric Cooperatives:
Chugach Electric Association
Publicly-Owned:
Anchorage Municipal Light & Power Department

State: Arizona

Regulatory Authority: Arizona Corporation Commission.

Gas Utilities

Investor-Owned:
Citizens Utilities Company
Southwest Gas Corporation

Electric Utilities

Investor-Owned:
Arizona Public Service Company
Citizens Utilities Company
Tucson Electric Power Company
Rural Electric Cooperative:
Duncan Valley Electric Cooperative, Inc.
Trico Electric Cooperative, Inc.

The following covered utility within the State of Arizona is not regulated by the Arizona Corporation Commission:

Electric Utilities

Publicly-Owned:
Salt River Project Agricultural Improvement and Power District

State: Arkansas

Regulatory Authority: Arkansas Public Service Commission.

Gas Utilities

Investor-Owned:
Arkansas-Louisiana Gas Company
Arkansas-Oklahoma Gas Corporation
Arkansas Western Gas Company

Electric Utilities

Investor-Owned:
Arkansas Power and Light Company
Empire District Electric Company
Oklahoma Gas and Electric Company
Southwestern Electric Power Company
Rural Electric Cooperatives:
Arkansas Valley Electric Cooperative Corporation
Carroll Electric Cooperative Corporation
First Electric Cooperative Corporation
Mississippi County Electric Cooperative, Inc.
Ozarks Electric Cooperative Corporation
The following covered utilities within the State of Arkansas are not regulated by the Arkansas Public Service Commission:

Electric Utilities

Publicly-Owned:
Jonesboro Water & Light
North Little Rock Electric Department

State: California

Regulatory Authority: California Public Utilities Commission.

Gas Utilities

Investor-Owned:
Pacific Gas and Electric Company
San Diego Gas and Electric Company
Southern California Gas Company
Southwest Gas Corporation

Electric Utilities

Investor-Owned:
Pacific Gas and Electric Company
Pacific Power and Light Company
San Diego Gas and Electric Company
Sierra Pacific Power Company
Southern California Edison Company
The following covered utilities within the State of California are not regulated by the California Public Utilities Commission:

Electric Utilities

Publicly-Owned:
Anaheim Public Utilities Department
Burbank Public Service Department
Glendale Public Service Department
Imperial Irrigation District
Los Angeles Department of Water and Power
Modesto Irrigation District
Palo Alto Electric Utility
Pasadena Water and Power Department
Riverside Public Utilities
Sacramento Municipal Utility District

Santa Clara Electric Department
Turlock Irrigation District
Vernon Municipal Light Department

Gas Utilities

Publicly-Owned:
Long Beach Gas Department

State: Colorado

Regulatory Authority: Colorado Public Utilities Commission.

Gas Utilities

Investor-Owned:
Citizens Utilities Company
ComFurT Gas, Incorporated
Eastern Colorado Utility Company
Greeley Gas Company
K N Energy, Incorporated
Peoples Natural Gas Company
Public Service Company of Colorado
Rocky Mountain Natural Gas Division of K N Energy, Inc.
Publicly-Owned:
City of Colorado Springs Department of Public Utilities
City of Fort Morgan Gas Department
Town of Ignacio Municipal Utilities
Town of Rangley Gas Department

Electric Utilities

Investor-Owned:
Public Service Company of Colorado
West Plains Energy
The following covered utilities within the State of Colorado are not regulated by the Colorado Public Utilities Commission:

Gas Utilities

Publicly-Owned:
Colorado Springs Department of Utilities (except sales to another gas utility)

Electric Utilities

Publicly-Owned:
Colorado Springs Department of Public Utilities
Rural Electric Cooperatives:
Holy Cross Electric Association
Intermountain Rural Association
Moon Lakes Electric Association

State: Connecticut

Regulatory Authority: Connecticut Department of Public Utility Control.

Gas Utilities

Investor-Owned:
Connecticut Natural Gas Corporation
Southern Connecticut Gas Company
Yankee Gas Service Company

Electric Utilities

Investor-Owned:
Connecticut Light and Power Company
United Illuminating Company
Publicly-Owned:
Groton Public Utilities
Wallingford DPU - Electric Division

State: Delaware

Regulatory Authority: Delaware Public Service Commission.

Gas Utilities

Investor-Owned:
Delmarva Power and Light Company

Electric Utilities

Investor-Owned:
Delmarva Power and Light Company
The following covered utility within the State of Delaware is not regulated by the Delaware Public Service Commission.

Electric Utilities

Rural Electric Cooperative:
Delaware Electric Cooperative, Inc.

State: District of Columbia

Regulatory Authority: Public Service Commission of the District of Columbia.

Gas Utilities

Investor-Owned:
Washington Gas Light Company

Electric Utilities

Investor-Owned:
Potomac Electric Power Company

State: Florida

Regulatory Authority: Florida Public Service Commission.

Gas Utilities

Investor-Owned:
City Gas Company of Florida
Peoples Gas System

Electric Utilities

Investor-Owned:
Florida Power and Light Company
Florida Power Corporation
Gulf Power Company
Tampa Electric Company
The Florida Public Service Commission has rate structure jurisdiction over the following utilities:
Publicly-Owned:
Gainesville Regional Utilities
Jacksonville Electric Company
Kissimmee Utility Authority
Lakeland Department of Electric and Water
Ocala Electric Authority
Orlando Utilities Commission
Tallahassee, City of
Rural Electric Cooperatives:
Clay Electric Cooperative
Lee County Electric Cooperative
Sumter Electric Cooperative, Inc.
Withlacoochee River Electric Cooperative

State: Georgia

Regulatory Authority: Georgia Public Service Commission.

Gas Utilities

Investor-Owned:
Atlanta Gas Light Company
United Cities Gas Company

Electric Utilities

Investor-Owned:
Georgia Power Company
Savannah Electric and Power Company
The following utilities within the State of Georgia are not regulated by the Georgia Public Service Commission:

Electric Utilities

Publicly-Owned:
Albany Water, Gas & Light Commission
Dalton Water, Light & Sink
Rural Electric Cooperatives:
Cobb Electric Membership Corporation
Flint Electric Membership Corporation
GreyStone Power Electric Membership Corporation
Jackson Electric Membership Corporation
North Georgia Electric Membership Corporation
Sawnee Electric Membership Corporation
Walton Electric Membership Corporation

State: Hawaii

Regulatory Authority: Hawaii Public Utilities Commission.

Electric Utilities

Investor-Owned:
Hawaii Electric Light Company, Inc.
Hawaiian Electric Company, Inc.
Maui Electric Company, Ltd.

State: Idaho

Regulatory Authority: Idaho Public Utilities Commission.

Gas Utilities

Investor-Owned:
Intermountain Gas Company
Mountain Fuel Supply
Washington Water Power Company

Electric Utilities

Investor-Owned:
Idaho Power Company
Pacific Power and Light Company
Utah Power and Light Company
Washington Water Power Company

State: Illinois

Regulatory Authority: Illinois Commerce Commission.

Gas Utilities

Investor-Owned:
Central Illinois Light Company
Central Illinois Public Service Company
Illinois Power Company
Iowa-Illinois Gas and Electric Company
North Shore Gas Company
Northern Illinois Gas Company
Panhandle Eastern Pipeline Company
Peoples Gas, Light, and Coke Company

Electric Utilities

Investor-Owned:
Central Illinois Light Company
Central Illinois Public Service Company
Commonwealth Edison Company
Interstate Power Company
Iowa-Illinois Gas and Electric Company
Union Electric Company
The following covered utility within the State of Illinois is not regulated by the Illinois Commerce Commission:

Electric Utilities

Publicly-Owned:
Springfield Water, Light and Power Department

State: Indiana

Regulatory Authority: Indiana Utility Regulatory Commission.

Gas Utilities

Investor-Owned:
Indiana Gas Company
Northern Indiana Public Service Company

Southern Indiana Gas and Electric Company
Publicly-Owned:
Citizens Gas and Coke Utility

Electric Utilities

Investor-Owned:
Indiana Michigan Power Company
Indianapolis Power and Light Company
Northern Indiana Public Service Company
PSI Energy
Southern Indiana Gas and Electric Company
Publicly-Owned:
Richmond Power and Light

State: Iowa

Regulatory Authority: Iowa Utilities Board.

Gas Utilities

Investor-Owned:
Interstate Power Company
Iowa Electric Light and Power Company
Iowa-Illinois Gas and Electric Company
Iowa Southern Utilities Company
Midwest Gas, Division of Midwest Power Systems, Inc.
Peoples Natural Gas Company, Division of Utilicorp United, Inc.
United Cities Gas Company, Great River Division

Electric Utilities

Investor-Owned:
Interstate Power Company
Iowa Electric Light and Power Company
Iowa-Illinois Gas and Electric Company
Iowa Southern Utilities Company
Midwest Power, Division of Midwest Power Systems, Inc.
Union Electric Company
Rural Electric Cooperatives:
Linn County RECA
The Iowa Utilities Board has service and safety regulation over the following utilities:
Publicly-Owned:
Muscatine Power and Water
Omaha Public Power District

State: Kansas

Regulatory Authority: Kansas State Corporation Commission.

Gas Utilities

Investor-Owned:
Anadarko Production Company
Arkansas-Louisiana Gas Company
Getty Gas Gathering Inc.
Greeley Gas Company
KN Energy, Incorporated
KPL Gas Service Company
Panhandle Eastern Pipeline Company
Peoples Natural Gas Company, Division of UtiliCorp United
United Cities Gas Company

Electric Utilities

Investor-Owned:
Empire District Electric Company
Kansas City Power and Light Company
Kansas Gas and Electric Company
KPL Gas Service Company
Southwestern Public Service Company
West Plains Energy, Division of UtiliCorp United
Rural Electric Cooperatives:
Midwest Energy Incorporated

The following covered utility within the State of Kansas is not regulated by the Kansas State Corporation Commission:

Electric Utilities

Publicly-Owned:
Kansas City Board of Public Utilities

State: Kentucky

Regulatory Authority: Kentucky Public Service Commission.

Gas Utilities

Investor-Owned:
Columbia Gas of Kentucky, Inc.
Louisville Gas and Electric Company
Union Light, Heat and Power Company
Western Kentucky Gas Company

Electric Utilities

Investor-Owned:
Kentucky Power Company
Kentucky Utilities Company
Louisville Gas and Electric Company
Union Light, Heat and Power Company
Rural Electric Cooperatives:
Green River Electric Corporation
Henderson-Union Rural Electric Cooperative Corporation
South Kentucky Rural Electric Cooperative
The following covered utilities within the State of Kentucky are not regulated by the Kentucky Public Service Commission:

Electric Utilities

Bowling Green Municipal Utilities
Owensboro Municipal Utilities
Paducah Power System
Pennyrile Rural Electric Cooperative Corporation
Warren Rural Electric Cooperative Corporation
West Kentucky Rural Electric Cooperative Corporation

State: Louisiana

Regulatory Authority: Louisiana Public Service Commission.

Gas Utilities

Investor-Owned:
Arkansas-Louisiana Gas Company
Entex, Inc.
Gulf States Utilities Company
Louisiana Gas Service Company
Trans Louisiana Gas Company
Publicly-Owned:
New Orleans Public Service, Inc.

Electric Utilities

Investor-Owned:
Central Louisiana Electric Company
Gulf States Utilities Company
Louisiana Power and Light Company (West Bank)
Southwestern Electric Power Company
Rural Electric Cooperatives:
Cajun Electric Power Cooperative
Dixie Electric Membership Corporation
Southwest Louisiana Electric Membership Corporation
The following covered utilities within the State of Louisiana are not regulated by the Louisiana Public Service Commission:

Electric Utilities

Publicly-Owned:
Lafayette Utilities System
New Orleans Public Service, Inc.

State: Maine

Regulatory Authority: Maine Public Utilities Commission.

Electric Utilities

Investor-Owned:
Bangor Hydro-Electric Company
Central Maine Power Company

State: Maryland

Regulatory Authority: Maryland Public Service Commission.

Gas Utilities

Investor-Owned:
Baltimore Gas and Electric Company
Washington Gas Light Company

Electric Utilities

Investor-Owned:
Baltimore Gas and Electric Company
Conowingo Power Company
Delmarva Power and Light—Company of Maryland
Potomac Edison Company
Potomac Electric Power Company
Rural Electric Cooperatives:
Choptank Electric Cooperative, Inc.
Southern Maryland Electric Cooperative, Inc.

State: Massachusetts

Regulatory Authority: Massachusetts Department of Public Utilities.

Gas Utilities

Investor-Owned:
Bay State Gas Company
Boston Gas Company
Colonial Gas Company
Commonwealth Gas Company

Electric Utilities

Investor-Owned:
Boston Edison Company
Cambridge Electric Light Company
Commonwealth Electric Company
Eastern Electric Company
Western Massachusetts Electric Company

State: Michigan

Regulatory Authority: Michigan Public Service Commission.

Gas Utilities

Investor-Owned:
Consumers Power Company
Michigan Consolidated Gas Company
Michigan Gas Company
Southeastern Michigan Gas Company
Wisconsin Public Service Corporation

Electric Utilities

Investor-Owned:
Consumers Power Company
Detroit Edison Company
Indiana and Michigan Electric Company
Michigan Power Company
Northern States Power
Upper Peninsula Power Company
Wisconsin Electric Power Company
Wisconsin Public Service Corporation
The following covered utilities within the State of Michigan are not regulated by the Michigan Public Service Commission:

Gas Utilities

Investor-Owned:
Battle Creek Gas Company

Electric Utilities

Publicly-Owned:
Lansing Board of Water and Light

State: Minnesota

Regulatory Authority: Minnesota Public Utility Commission.

Gas Utilities

Investor-Owned:
Interstate Power Company
Midwest Gas, Division of Iowa Public Service Company
Minnegasco—Division of Arkla, Inc.
Northern Minnesota Utilities—Division of UtiliCorp United, Inc.
Northern States Power Company
Peoples Natural Gas Company—Division of UtiliCorp United, Inc.

Electric Utilities

Investor-Owned:
Interstate Power Company
Minnesota Power and Light Company
Northern States Power Company
Otter Tail Power Company
Rural Electric Cooperative:
Dakota Electric Association
The following covered utilities within the State of Minnesota are not regulated by the Minnesota Public Utility Commission:

Electric Utilities

Publicly-Owned:
Rochester Department of Public Utilities
Rural Electric Cooperatives:
Anoka Electric Cooperative

State: Mississippi

Regulatory Authority: Mississippi Public Service Commission.

Gas Utilities

Investor-Owned:
Entex, Inc.
Mississippi Valley Gas Company

Electric Utilities

Investor-Owned:
Mississippi Power and Light Company
Mississippi Power Company
The following covered utilities within the State of Mississippi are not regulated by the Mississippi Public Service Commission:

Electric Utilities

Publicly-Owned:
Tupelo Water & Light Department
Rural Electric Cooperatives:
Alcorn County Electric Power Association
Coast Electric Power Association
4-County Electric Power Association
Singing River Electric Power Association
Southern Pine Electric Power Association
Tombigbee Electric Power Association

State: Missouri

Regulatory Authority: Missouri Public Service Commission.

Gas Utilities

Investor-Owned:
Associated Natural Gas Company
Gas Service, A Western Resources Company
Laclede Gas Company
Missouri Public Service Company
Union Electic Company

Electric Utilities

Investor-Owned:
Citizens Electric Corporation
Empire District Electric Company
Kansas City Power and Light Company
Missouri Public Service Company
St. Joseph Light and Power Company
Union Electric Company
The following covered utilities within the State of Missouri are not regulated by the Missouri Public Service Commission:

Gas Utilities

Investor-Owned:
Williams Natural Gas Company
Publicly-Owned:
Springfield City Utilities

Electric Utilities

Publicly-Owned:
Independence Power and Light Department
Springfield City Utilities

State: Montana

Regulatory Authority: Montana Public Service Commission.

Gas Utilities

Investor-Owned:
Montana-Dakota Utilities Company
Montana Power Company

Electric Utilities

Investor-Owned:
Black Hills Power and Light Company
Montana-Dakota Utilities Company
Montana Power Company
Pacific Power and Light Company
Washington Water Power Company

State: Nebraska

Regulatory Authority—Nebraska Public Service Commission.
The Commission does not regulate the rates and service of the gas and electric utilities of the State of Nebraska.
The following covered utilities within the State of Nebraska are not regulated by the Nebraska Public Service Commission:

Gas Utilities

Investor-Owned:
Gas Service Company
Midwest Gas, Division of Iowa Public Service Company
Minnegasco—Division of Arkla, Inc.
Northwestern Public Service Company
Peoples Natural Gas Company, Division of Utilicorp United, Inc.

Electric Utilities

Publicly-Owned:
Lincoln Electric System
Nebraska Public Power District
Omaha Public Power District
The governing body of each Nebraska municipality exercises ratemaking jurisdiction over gas utility rates, operations, and services provided by a gas utility within its city or town limits. These municipal authorities would be State agencies as defined by PURPA, and thus have responsibilities under PURPA identical to those of the State regulatory authority.
Publicly-Owned:
Metropolitan Utilities District of Omaha

State: Nevada

Regulatory Authority: Nevada Public Service Commission.

Gas Utilities

Investor-Owned:
Southwest Gas Corporation

Electric Utilities

Investor-Owned:
Idaho Power Company
Nevada Power Company
Sierra Pacific Power Company

State: New Hampshire

Regulatory Authority: New Hampshire Public Utilities Commission.

Gas Utilities

Investor-Owned:
EnergyNorth Natural Gas, Inc.

Electric Utilities

Investor-Owned:
Granite State Electric Company
Public Service Company of New Hampshire
Rural Electric Cooperatives:
New Hampshire Electric Cooperative, Inc.

State: New Jersey

Regulatory Authority: New Jersey Board of Public Utilities.

Gas Utilities

Investor-Owned:
Elizabethtown Gas Company
New Jersey Natural Gas Company
Public Service Electric and Gas Company
South Jersey Gas Company

Electric Utilities

Investor-Owned:
Atlantic City Electric Company
Jersey Central Power and Light Company
Public Service Electric and Gas Company
Rockland Electric Company

State: New Mexico

Regulatory Authority: New Mexico Public Service Commission.

Gas Utilities

Investor-Owned:
Gas Company of New Mexico

Electric Utilities

Investor-Owned:
El Paso Electric Company
Public Service Company of New Mexico
Southwestern Public Service Company
Texas-New Mexico Power Company
Rural Electric Cooperatives:
Duncan Valley Electric Cooperative, Inc.
Lea County Electric Cooperative, Inc.

State: New York

Regulatory Authority: New York Public Service Commission.

Gas Utilities

Investor-Owned:

Brooklyn Union Gas Company
Central Hudson Gas and Electric Corporation
Consolidated Edison Company of New York
Long Island Lighting Company
National Fuel Gas Distribution Corporation
New York State Electric and Gas Corporation
Niagara Mohawk Power Corporation
Orange and Rockland Utilities
Rochester Gas and Electric Corporation

Electric Utilities

Investor-Owned:
Central Hudson Gas and Electric Corporation
Consolidated Edison Company of New York
Long Island Lighting Company
New York State Electric and Gas Corporation
Niagara Mohawk Power Corporation
Orange and Rockland Utilities
Rochester Gas and Electric Corporation
The following covered utility within the State of New York is not regulated by the New York Public Service Commission:

Electric Utilities

Publicly-Owned:
Power Authority of New York

State: North Carolina

Regulatory Authority: North Carolina Utilities Commission.

Gas Utilities

Investor-Owned:
North Carolina Natural Gas Corporation
Piedmont Natural Gas Company
Public Service Company of North Carolina, Inc.

Electric Utilities

Investor-Owned:
Carolina Power and Light Company
Duke Power Company
Nantahala Power & Light Company
Virginia Electric and Power Company
The following covered utilities within the State of North Carolina are not regulated by the North Carolina Utilities Commission:

Electric Utilities

Publicly-Owned:
Fayetteville Public Works Commission
Greenville Utilities Commission
High Point Electric Utility Department
Rocky Mount Public Utilities
Wilson Utilities Department
Rural Electric Cooperatives:
Blue Ridge Electric Membership Corporation
Rutherford Electric Membership Corporation

State: North Dakota

Regulatory Authority: North Dakota Public Service Commission.

Gas Utilities

Investor-Owned:
Montana Dakota Utilities Company
Northern States Power Company

Electric Utilities

Investor-Owned:
Montana Dakota Utilities Company
Northern States Power Company
Otter Tail Power Company

State: Ohio

Regulatory Authority: Ohio Public Utilities Commission.

Gas Utilities

Investor-Owned:
Cincinnati Gas and Electric Company
Columbia Gas of Ohio, Inc.
Dayton Power and Light Company
East Ohio Gas Company
National Gas and Oil Company
West Ohio Gas Company

Electric Utilities

Investor-Owned:
Cincinnati Gas and Electric Company
Cleveland Electric Illuminating Company
Columbus and Southern Ohio Electric Company
Dayton Power and Light Company
Monongahela Power Company
Ohio Edison Company
Ohio Power Company
Toledo Edison Company
The following covered utilities within the State of Ohio are not regulated by the Ohio Public Utilities Commission:

Electric Utilities

Publicly-Owned:
Cleveland Division of Light and Power
Rural Electric Cooperative:
South Central Power Company

State: Oklahoma

Regulatory Authority: Oklahoma Corporation Commission.

Gas Utilities

Investor-Owned:
Arkansas-Louisiana Gas Company
Arkansas-Oklahoma Gas Corporation
KPL Gas Service Company
Oklahoma Natural Gas Company
Southern Union Gas Company

Electric Utilities

Investor-Owned:
Empire District Electric Company
Oklahoma Gas and Electric Company
Public Service Company of Oklahoma
Southwestern Public Service Company
Rural Electric Cooperative:
Cotton Electric Cooperative

State: Oregon

Regulatory Authority: Public Utility Commission of Oregon.

Gas Utilities

Investor-Owned:
Cascade Natural Gas Corporation
Northwest Natural Gas Company
Washington Water Power Company

Electric Utilities

Investor-Owned:
Idaho Power Company
Pacific Power and Light Company
Portland General Electric Company
The following covered utilities within the State of Oregon are not regulated by the Public Utility Commission of Oregon:

Electric Utilities

Publicly-Owned:
Central Lincoln People's Utility District
Clatskanie People's Utility District
Eugene Water and Electric Board
Springfield Utility Board
Rural Electric Cooperatives:
Oregon Trail Electric
Umatilla Electric Cooperative Association

State: Pennsylvania

Regulatory Authority: Pennsylvania Public Utility Commission.

Gas Utilities

Investor-Owned:
Carnegie Natural Gas Company
Columbia Gas of Pennsylvania, Inc.
Equitable Gas Company
National Fuel Gas Distribution Corporation
North Penn Gas Company
Pennsylvania Gas and Water Company
Peoples Natural Gas Company
Philadelphia Electric Company
T.W. Phillips Gas and Oil Company
UGI Corporation

Electric Utilities

Investor-Owned:
Duquesne Light Company
Metropolitan Edison Company
Pennsylvania Electric Company
Pennsylvania Power Company
Pennsylvania Power and Light Company
Philadelphia Electric Company
UGI—Luzerne Electric Company
West Penn Power Company
The following covered utility within the State of Pennsylvania is not regulated by the Pennsylvania Public Utility Commission:

Gas Utilities

Publicly-Owned:
Philadelphia Gas Works

State: Puerto Rico

Regulatory Authority: Puerto Rico Public Service Commission.
The following covered utility within Puerto Rico is not regulated by the Puerto Rico Public Service Commission:

Electric Utilities

Publicly-Owned:
Puerto Rico Electric Power Authority

State: Rhode Island

Regulatory Authority: Rhode Island Public Utilities Commission.

Gas Utilities

Investor-Owned:
Providence Gas Company

Electric Utilities

Investor-Owned:
Blackstone Valley Electric Company
Narragansett Electric Company

State: South Carolina

Regulatory Authority: South Carolina Public Service Commission.

Gas Utilities

Investor-Owned:
Carolina Pipeline Company
Piedmont Natural Gas Company

South Carolina Electric and Gas Company

Electric Utilities

Investor-Owned:
Carolina Power and Light Company
Duke Power Company
South Carolina Electric and Gas Company

The following covered utilities within the State of South Carolina are not regulated by the South Carolina Public Service Commission:

Electric Utilities

Publicly-Owned:
South Carolina Public Service Authority
Rural Electric Cooperatives:
Berkeley Electric Cooperatives, Inc.
Palmetto Electric Cooperatives, Inc.

State: South Dakota

Regulatory Authority: South Dakota Public Utilities Commission.

Gas Utilities

Investor-Owned:
Midwest Gas, Division of Iowa Public Service Company
Minnegasco, Inc.
Montana-Dakota Utilities Company
Northwestern Public Service Company

Electric Utilities

Investor-Owned:
Black Hills Power and Light Company
IPS Electric, Division of Iowa Public Service Company
Montana-Dakota Utilities Company
Northern States Power Company
Northwestern Public Service Company

The following covered utility within the State of South Dakota is not regulated by the South Dakota Public Service Commission:

Electric Utilities

Publicly-Owned:
Nebraska Public Power District

State: Tennessee

Regulatory Authority: Tennessee Public Service Commission.

Gas Utilities

Investor-Owned:
Chattanooga Gas Company
Nashville Gas Company

Electric Utilities

Investor-Owned:
Kingsport Power Company

The following covered utilities within the State of Tennessee are not regulated by the Tennessee Public Service Commission.

Gas Utilities

Publicly-Owned:
Memphis Light, Gas and Water Division

Electric Utilities

Publicly-Owned:
Bristol Tennessee Electric System
Chattanooga Electric Power Board
Clarksville Department of Electricity
Cleveland Utilities
Greeneville Light and Power System
Jackson Utility Division—Electric Department
Johnson City Power Board
Knoxville Utilities Board
Lenoir City Utilities Board
Memphis Light, Gas and Water Division
Murfreesboro Electric Department
Nashville Electric Service
Sevier County Electric System
Rural Electric Cooperatives:
Appalachian Electric Cooperative
Cumberland Electric Membership Corporation
Duck River Electric Membership Cooperative
Gibson County Electric Membership Corporation
Meriwether Lewis Electric Cooperative
Middle Tennessee Electric Membership Corporation
Southwest Tennessee Electric Membership Corporation
Tri-County Electric Membership Corporation
Upper Cumberland Electric Membership Corporation
Volunteer Electric Cooperative

State: Tennessee

Regulatory Authority: Tennessee Valley Authority.

Electric Utilities

Publicly-Owned:
Athens Utilities
Bowling Green Municipal Utilities
Bristol Tennessee Electric System
Chattanooga Electric Power Board
Clarksville Department of Electricity
Cleveland Utilities
Clinton Utilities Board
Decatur Electric Department
Dickson Electric Department
Dyersburg Electric System
Florence Electric Department
Greeneville Light and Power System
Huntsville Utilities
Jackson Utility Division—Electric Department
Johnson City Power Board
Knoxville Utilities Board
Lenoir City Utilities Board
Memphis Light, Gas and Water Division
Morristown Power System
Murfreesboro Electric Department
Nashville Electric Service
Paducah Power System
Sevier County Electric System
Tupelo Water and Light Department
Rural Electric Cooperatives:
Alcorn County Electric Company Association
Appalachian Electric Cooperative
Cullman Electric Cooperative
Cumberland Electric Membership Corporation
Duck River Electric Membership Corporation
4-County Electric Power Association
Gibson County Electric Membership Corporation
Holston Electric Cooperative
Joe Wheeler Electric Membership Corporation
Meriwether Lewis Electric Cooperative
Middle Tennessee Electric Membership Corporation
North Georgia Electric Membership Corporation
Pennyrile Rural Electric Cooperative Corporation
Sequachee Valley Electric Cooperative
Southwest Tennessee Electric Membership Corporation
Tombigbee Electric Power Association
Tri-County Electric Membership Corporation
Upper Cumberland Electric Membership Corporation
Volunteer Electric Cooperative
Warren Rural Electric Cooperative Corporation
West Kentucky Rural Electric Cooperative Corporation

State: Texas

Regulatory Authority: Texas Public Utility Commission.

Electric Utilities

Investor-Owned:
Central Power and Light Company
El Paso Electric Company
Gulf States Utilities Company
Houston Lighting and Power Company
Southwestern Electric Power Company
Southwestern Electric Service Company
Southwestern Public Service Company
Texas-New Mexico Power Company
TU Electric
West Texas Utilities Company
Publicly-Owned:
Lower Colorado River Authority
Rural Electric Cooperatives:
Bluebonnet Electric Cooperative, Inc.
Cap Rock Electric Cooperative, Inc.
Guadalupe Valley Electric Cooperative, Inc.
Pedernales Electric Cooperative, Inc.
Sam Houston Electric Cooperative, Inc.
Tri-County Electric Cooperative, Inc.

The governing body of each Texas municipality exercises exclusive original jurisdiction over electric utility rates, operations, and services provided by an electric utility (whether privately owned or publicly owned) within its city or town limits, unless the municipality has surrendered this jurisdiction to the Texas Public Utility Commission. The Commission hears *de novo* appeals from the decision of such municipalities. These municipal authorities would be State agencies as defined by PURPA and, thus, have responsibilities under PURPA identical to those of a State regulatory authority.

The municipally owned utilities listed below are not under the commission's original ratemaking jurisdiction:

Electric Utilities

Publicly-Owned:
Austin Electric Department
Brownsville PUB
Bryan, City of
Garland Electric Department
Lubbock Power and Light
San Antonio City Public Service Board

State: Texas

Regulatory Authority: Railroad Commission of Texas.

Gas Utilities

Investor-Owned:
Atmos Energy Corporation

Entex, Inc.
Lone Star Gas Company, a division of ENSERCH Corporation
Southern Union Company

The governing body of each Texas municipality exercises exclusive original ratemaking jurisdiction over gas utility rates, operations, and services provided by a gas utility within its city or town limits subject to appellate review by the Railroad Commission of Texas. These municipal authorities would be State agencies as defined by PURPA and, thus, have responsibilities under PURPA identical to those of a State regulatory authority.

The following covered utilities within the State of Texas are not regulated by the Railroad Commission of Texas. (The Railroad Commission's appellate authority does not extend to municipally owned gas utilities).

Gas Utilities

Publicly-Owned:
City Public Service Board (San Antonio)

State: Utah

Regulatory Authority: Utah Public Service Commission.

Gas Utilities

Investor-Owned:
Mountain Fuel Supply Company

Electric Utilities

Investor-Owned:
Utah Power and Light Company
Rural Electric Cooperatives:
Moon Lake Electric Association

State: Vermont

Regulatory Authority: Vermont Public Service Board.

Electric Utilities

Investor-Owned:
Central Vermont Public Service Corporation
Green Mountain Power Corporation
Public Service Company of New Hampshire

State: Virginia

Regulatory Authority: Virginia State Corporation Commission.

Gas Utilities

Investor-Owned:
Commonwealth Gas Services, Inc.
Virginia Natural Gas
Washington Gas Light Company

Electric Utilities

Investor-Owned:
Appalachian Power Company
Delmarva Power and Light Company
Kentucky Utilities Company
Potomac Edison Company
Virginia Electric and Power Company
Rural Electric Cooperatives:
Northern Virginia Electric Cooperative
Rappahannock Electric Cooperative

The following covered utilities within the State of Virginia are not regulated by the Virginia State Corporation Commission:

Gas Utilities

Publicly-Owned:
City of Richmond, Virginia, Department of Public Utilities

Electric Utilities

Publicly-Owned:
Danville Water, Gas & Electric

State: Washington

Regulatory Authority: Washington Utilities and Transportation Commission.

Gas Utilities

Investor-Owned:
Cascade Natural Gas Corporation
Northwest Natural Gas Company
Washington Natural Gas Company
Washington Water Power Company

Electric Utilities

Investor-Owned:
Pacific Power & Light Company
Puget Sound Power & Light Company
Washington Water Power Company

The following covered utilities within the State of Washington are not regulated by the Washington Utilities and Transportation Commission:

Electric Utilities

Publicly-Owned:
Port Angeles Light and Water Department
Public Utility District No. 1 of Benton County
Public Utility District No. 1 of Chelan County
Public Utility District No. 1 of Clark County
Public Utility District No. 1 of Cowlitz County
Public Utility District No. 1 of Douglas County
Public Utility District No. 1 of Franklin County
Public Utility District No. 1 of Grays County
Public Utility District No. 1 of Lewis County
Public Utility District No. 1 of Snohomish County
Public Utility District No. 2 of Grant County
Richland Energy Service Department
Seattle City Light Department
Tacoma Public Utilities—Light Division

State: West Virginia

Regulatory Authority: West Virginia Public Service Commission.

Gas Utilities

Investor-Owned:
Equitable Gas Company
Hope Gas Incorporated
Mountaineer Gas Company

Electric Utilities

Investor-Owned:
Appalachian Power Company
Monongahela Power Company
Potomac Edison Company
Wheeling Electric Company

State: Wisconsin

Regulatory Authority: Wisconsin Public Service Commission.

Gas Utilities

Investor-Owned:
Madison Gas and Electric Company
Northern States Power Company
Wisconsin Fuel and Light Company
Wisconsin Gas Company
Wisconsin Natural Gas Company
Wisconsin Power and Light Company
Wisconsin Public Service Corporation

Electric Utilities

Investor-Owned:
Madison Gas and Electric Company
Northern States Power Company
Wisconsin Electric Power Company
Wisconsin Power and Light Company
Wisconsin Public Service Corporation
Publicly-Owned:
City of Kaukauna Electric and Water Department
City of Menasha Electric and Water Utilities

State: Wyoming

Regulatory Authority: Wyoming Public Service Commission.

Gas Utilities

Investor-Owned:
Cheyenne Light, Fuel and Power Company
Kansas-Nebraska Natural Gas Company
Montana-Dakota Utilities Company
Mountain Fuel Supply Company

Electric Utilities

Investor-Owned:
Black Hills Power and Light Company
Cheyenne Light, Fuel and Power Company
Montana-Dakota Utilities Company
Pacific Power and Light Company
Utah Power and Light Company
Rural Electric Cooperative:
Tri-County Electric Association, Inc.

Appendix B

Electric Utilities

All utilities listed below had electric energy sales, for purposes other than resale, in excess of 500 million kilowatt hours in any year from 1976–1992. The utilities listed more than once have sales in more than one State, and those States are indicated by abbreviations in parentheses.

Investor-Owned:
Alabama Power Company
Appalachian Power Company (VA)
Appalachian Power Company (WV)
Arizona Public Service Company
Arkansas Power & Light Company
Atlantic City Electric Company
Baltimore Gas & Electric Company
Bangor Hydro-Electric Company
Black Hills Power & Light Company (MT)
Black Hills Power & Light Company (SD)
Black Hills Power & Light Company (WY)
Blackstone Valley Electric Company
Boston Edison Company
Cambridge Electric Light Company
Carolina Power & Light Company (NC)
Carolina Power & Light Company (SC)
Central Hudson Gas & Electric Corporation
Central Illinois Light Company
Central Illinois Public Service Company
Central Louisiana Electric Company
Central Maine Power Company
Central Power & Light Company
Central Vermont Public Service Corporation

Cheyenne Light, Fuel and Power Company
Cincinnati Gas & Electric Company
Citizens Electric Corporation
Citizens Utilities Company (AZ)
Cleveland Electric Illuminating Company
Columbus and Southern Ohio Electric Company
Commonwealth Edison Company
Commonwealth Electric Company
Connecticut Light & Power Company
Conowingo Power Company
Consolidated Edison Company of New York
Consumers Power Company
Dayton Power & Light Company
Delmarva Power & Light Company (DE)
Delmarva Power & Light Company (VA)
Delmarva Power & Light Company of Maryland
Detroit Edison Company
Duke Power Company (NC)
Duke Power Company (SC)
Duquesne Light Company
Eastern Electric Company
El Paso Electric Company (NM)
El Paso Electric Company (TX)
Empire District Electric Company (AR)
Empire District Electric Company (KS)
Empire District Electric Company (MO)
Empire District Electric Company (OK)
Florida Power Corporation
Florida Power & Light Company
Georgia Power Company
Granite State Electric Company
Green Mountain Power Corporation
Gulf Power Company
Gulf States Utilities Company (LA)
Gulf States Utilities Company (TX)
Hawaii Electric Light Company, Inc.
Hawaiian Electric Company, Inc.
Houston Lighting and Power Company
Idaho Power Company (ID)
Idaho Power Company (NV)
Idaho Power Company (OR)
Illinois Power Company
Indiana Michigan Power Company (IN)
Indiana Michigan Power Company (MI)
Indianapolis Power & Light Company
Interstate Power Company (IA)
Interstate Power Company (IL)
Interstate Power Company (MN)
Iowa Electric Light & Power Company
Iowa-Illinois Gas & Electric Company (IA)
Iowa-Illinois Gas & Electric Company (IL)
Iowa Southern Utilities Company
IPS Electric, Division of Iowa Public Service Co. (SD)
Jersey Central Power & Light Company
Kansas City Power & Light Company (KS)
Kansas City Power & Light Company (MO)
Kansas Gas & Electric Company
Kentucky Power Company
Kentucky Utilities Company (KY)
Kentucky Utilities Company (VA)
Kingsport Power Company
KPL Gas Service (KS)
Long Island Lighting Company
Louisiana Power & Light Company
Louisville Gas & Electric Company
Madison Gas & Electric Company
Massachusetts Electric Company
Maui Electric Company, Ltd.
Metropolitan Edison Company
Michigan Power Company
Midwest Power, Division of Midwest Power Systems, Inc. (IA)
Minnesota Power & Light Company
Mississippi Power Company
Mississippi Power & Light Company
Missouri Public Service Company
Monongahela Power Company (OH)
Monongahela Power Company (WV)
Montana-Dakota Utilities Company (MT)
Montana-Dakota Utilities Company (ND)
Montana-Dakota Utilities Company (SD)
Montana-Dakota Utilities Company (WY)
Montana Power Company
Nantahala Power & Light Company
Narragansett Electric Company
Nevada Power Company
New Orleans Public Service, Inc.
New York State Electric & Gas Corporation
Niagara Mohawk Power Company
Northern Indiana Public Service Company
Northern States Power Company (MI)
Northern States Power Company (MN)
Northern States Power Company (ND)
Northern States Power Company (SD)
Northern States Power Company (WI)
Northwestern Public Service Company
Ohio Edison Company
Ohio Power Company
Oklahoma Gas & Electric Company (AR)
Oklahoma Gas & Electric Company (OK)
Orange & Rockland Utilities
Otter Tail Power Company (MN)
Otter Tail Power Company (ND)
Pacific Gas & Electric Company
Pacific Power & Light Company (CA)
Pacific Power & Light Company (ID)
Pacific Power & Light Company (MT)
Pacific Power & Light Company (OR)
Pacific Power & Light Company (WA)
Pacific Power & Light Company (WY)
Pennsylvania Electric Company
Pennsylvania Power & Light Company
Pennsylvania Power Company
Philadelphia Electric Company
Portland General Electric Company
Potomac Edison Company (MD)
Potomac Edison Company (VA)
Potomac Edison Company (WV)
Potomac Electric Power Company (DC)
Potomac Electric Power Company (MD)
PSI Energy (IN)
Public Service Company of Colorado
Public Service Company of New Hampshire (NH)
Public Service Company of New Hampshire (VT)
Public Service Company of New Mexico
Public Service Company of Oklahoma
Public Service Electric and Gas Company
Puget Sound Power & Light Company
Rochester Gas & Electric Corporation
Rockland Electric Company
St. Joseph Light & Power Company
San Diego Gas & Electric Company
Savannah Electric & Power Company
Sierra Pacific Power Company (CA)
Sierra Pacific Power Company (NV)
South Carolina Electric & Gas Company
Southern California Edison Company
Southern Indiana Gas & Electric Company
Southwestern Electric Power Company (AR)
Southwestern Electric Power Company (LA)
Southwestern Electric Power Company (TX)
Southwestern Electric Service Company
Southwestern Public Service Company (KS)
Southwestern Public Service Company (NM)
Southwestern Public Service Company (OK)
Southwestern Public Service Company (TX)
Tampa Electric Company
Texas-New Mexico Power Company
Toledo Edison Company
TU Electric
Tucson Electric Power Company
UGI-Luzerne Electric Division
Union Electric Company (IA)
Union Electric Company (IL)
Union Electric Company (MO)
Union Light, Heat & Power Company
United Illuminating Company
Upper Peninsula Power Company
Utah Power & Light Company (ID)
Utah Power & Light Company (UT)
Utah Power & Light Company (WY)
Virginia Electric & Power Company (NC)
Virginia Electric & Power Company (VA)
Washington Water Power Company (ID)
Washington Water Power Company (MT)
Washington Water Power Company (WA)
West Penn Power Company
West Plains Energy (CO)
West Texas Utilities Company
Western Massachusetts Electric Company
West Plains Energy, Division of UtiliCorp United (KS)
Wheeling Electric Company
Wisconsin Electric Power Company (MI)
Wisconsin Electric Power Company (WI)
Wisconsin Power & Light Company
Wisconsin Public Service Corporation (MI)
Wisconsin Public Service Corporation (WI)

Publicly-Owned:

Albany Water, Gas & Light Commission (GA)
Anaheim Public Utilities Department (CA)
Anchorage Municipal Light & Power Department (AK)
Athens Utilities (AL)
Austin Electric Department (TX)
Bowling Green Municipal Utilities (KY)
Bristol Tennessee Electric System (TN)
Brownsville Public Utility Board (TX)
Bryan, City of (TX)
Burbank Public Service Department (CA)
Central Lincoln People's Utility District (OR)
Chattanooga Electric Power Board (TN)
City of Kaukauna Electric and Water Department (WI)
City of Menasha Electric and Water Utilities (WI)
Clarksville Department of Electricity (TN)
Clatskanie People's Utility District (OR)
Cleveland Division of Light & Power (OH)
Cleveland Utilities (TN)
Clinton Utilities Board (TN)
Colorado Springs Department of Public Utilities (CO)
Dalton Water, Light & Sink (CA)
Danville Water, Gas & Electric (VA)
Decatur Electric Department (AL)
Dickson Electric Department (TN)
Dothan Electric Department (AL)
Dyersburg Electric System (TN)
Eugene Water & Electric Board (OR)
Fayetteville Public Works Commission (NC)
Florence Electric Department (AL)
Gainesville Regional Utilities (FL)

Garland Electric Department (TX)
Glendale Public Service Department (CA)
Greeneville Light & Power System (TN)
Greenville Utilities Commission (NC)
Groton Public Utilities (CT)
High Point Electric Utility Dept. (NC)
Huntsville Utilities (AL)
Imperial Irrigation District (CA)
Independence Power & Light Department (MO)
Jackson Utility Division-Electric Department (TN)
Jacksonville Electric Authority (FL)
Johnson City Power Board (TN)
Jonesboro Water & Light (AR)
Kansas City Board of Public Utilities (KS)
Kissimmee Utility Authority (FL)
Knoxville Utilities Board (TN)
Lafayette Utilities System (LA)
Lakeland Department of Electric and Water (FL)
Lansing Board of Water & Light (MI)
Lenoir City Utilities Board (TN)
Lincoln Electric System (NE)
Los Angeles Department of Water and Power (CA)
Lower Colorado River Authority (TX)
Lubbock Power & Light (TX)
Memphis Light, Gas & Water Division (TN)
Modesto Irrigation District (CA)
Morristown Power System (TN)
Murfreesboro Electric Dept. (TN)
Muscatine Power & Water (IA)
Nashville Electric Service (TN)
Nebraska Public Power District (NE)
Nebraska Public Power District (SD)
North Little Rock Electric Department (AR)
Ocala Electric Authority (FL)
Omaha Public Power District (IA)
Omaha Public Power District (NE)
Orlando Utilities Commission (FL)
Owensboro Municipal Utilities (KY)
Paducah Power System (KY)
Palo Alto Electric Utility (CA)
Pasadena Water & Power Department (CA)
Port Angeles Light & Water Department (WA)
Power Authority of New York (NY)
Public Utility District No. 1 of Benton County (WA)
Public Utility District No. 1 of Chelan County (WA)
Public Utility District No. 1 of Clark County (WA)
Public Utility District No. 1 of Cowlitz County (WA)
Public Utility District No. 1 of Douglas County (WA)
Public Utility District No. 1 of Franklin County (WA)
Public Utility District No. 1 of Grays Harbor County (WA)
Public Utility District No. 1 of Lewis County (WA)
Public Utility District No. 1 of Snohomish County (WA)
Public Utility District No. 2 of Grant County (WA)
Puerto Rico Electric Power Authority
Richland Energy Services Department (WA)
Richmond Power & Light (IN)
Riverside Public Utilities (CA)
Rochester Department of Public Utilities (MN)
Rocky Mount Public Utilities (NC)
Sacramento Municipal Utility District (CA)
Salt River Project Agricultural Improvement and Power District (AZ)
San Antonio City Public Service Board (TX)
Santa Clara Electric Department (CA)
Seattle City Light Department (WA)
Sevier County Electric System (TN)
South Carolina Public Service Authority
Springfield City Utilities (MO)
Springfield Utility Board (OR)
Springfield Water, Light & Power Department (IL)
Tacoma Public Utilities—Light Division (WA)
Tallahassee, City of (FL)
Tupelo Water & Light Department (MS)
Turlock Irrigation District (CA)
Vernon Municipal Light Department (CA)
Wallingford DPU—Electric Division (CT)
Wilson Utilities Department (NC)

Rural Electric Cooperatives:
Alcorn County Electric Power Association (MS)
Anoka Electric Cooperative (MN)
Appalachian Electric Cooperative (TN)
Arkansas Valley Electric Cooperative Corporation (AR)
Berkeley Electric Cooperative (SC)
Bluebonnet Electric Cooperatives, Inc., (TX)
Blue Ridge Electric Membership Corporation (NC)
Cajun Electric Power Cooperative (LA)
Cap Rock Electric Cooperative, Inc. (TX)
Carroll Electric Cooperative Corporation (AR)
Choptank Electric Cooperative, Inc. (MD)
Chugach Electric Cooperative (AK)
Clay Electric Cooperative (FL)
Coast Electric Power Association (MS)
Cobb Electric Membership Corporation (GA)
Cotton Electric Cooperative (OK)
Cullman Electric Cooperative (AL)
Cumberland Electric Membership Corporation (TN)
Dakota Electric Association (MN)
Delaware Electric Cooperative, Inc. (DL)
Dixie Electric Membership Corporation (LA)
Duck River Electric Membership Corporation (TN)
Duncan Valley Electric Cooperative, Inc. (AZ, NM)
First Electric Cooperative Corporation (AR)
Flint Electric Membership Corporation (GA)
4-County Electric Power Association (MS)
Gibson County Electric Membership (TN)
Green River Electric Corporation (KY)
GreyStone Power Corporation (GA)
Guadalupe Valley Electric Cooperative, Inc. (TX)
Henderson—Union Rural Electric Cooperative Corporation
Holston Electric Cooperative (TN)
Holy Cross Electric Association (CO)
Intermountain Rural Electric (CO)
Jackson Electric Membership Corporation (GA)
Joe Wheeler Electric Membership Corporation (AL)
Lea County Electric Cooperative, Inc. (NM)
Lee County Electric Cooperative (FL)
Linn County Rural Electric Cooperative Association (IA)
Meriwether Lewis Electric Cooperative (TN)
Middle Tennessee Electric Membership Corporation (TN)
Midwest Energy Incorporated (KS)
Mississippi County ECC (AR)
Moon Lake Electric Association (CO)
New Hampshire Electric Cooperative, Inc. (NH)
Northern Virginia Electric Cooperative (VA)
North Georgia Electric Membership Corporation (GA)
Oregon Trail Electric
Ozarks Electric Cooperative Corporation (AR)
Palmetto Electric Cooperative, Inc. (SC)
Pedernales Electric Cooperative Corporation, Inc. (TX)
Pennyrile Rural Electric Cooperative Corporation (KY)
Rappahannock Electric Cooperative (VA)
Rural Electric System (AL)
Rutherford Electric Membership Corporation (NC)
Sam Houston Electric Cooperative, Inc. (TX)
Sawnee Electric Membership Corporation (GA)
Sequachee Valley Electric Cooperative (TN)
Singing River Electric Power Association (MS)
South Central Power Company (OH)
Southern Maryland Electric Cooperative, Inc. (MD)
Southern Pine Electric Power Association (MS)
South Kentucky Rural Electric Cooperative (KY)
Southwest Louisiana Electric Membership Corporation (LA)
Southwest Tennessee Electric Membership Corporation (TN)
Sumter Electric Cooperative (FL)
Tombigbee Electric Power Association (MS)
Tri-County Electric Association, Inc. (WY)
Tri-County Electric Cooperative, Inc. (TX)
Tri-County Electric Membership Corporation (TN)
Trico Electric Cooperative, Inc. (AZ)
Umatilla Electric Cooperative Association (OR)
Upper Cumberland Electric Membership Corporation (TN)
Volunteer Electric Cooperative (TN)
Walton Electric Membership Corporation (GA)
Warren Rural Electric Cooperative Corporation (KY)
West Kentucky Rural Electric Cooperative Corporation (KY)
Withlacoochee River Electric Cooperative (FL)

Federal Agencies:
Bonneville Power Administration (OR)
Tennessee Valley Authority (TN)
Western Area Power Administration (CO)

Gas Utilities

All gas utilities listed below had natural gas sales, for purposes other than resale, in excess of 10 billion cubic feet in any year from 1976–1992. The utilities listed more than once have sales in more than one State

and those States are indicated by abbreviations in parentheses.

Investor-Owned:
- Alabama Gas Corporation
- Anadarko Production Company
- Arkansas-Louisiana Gas Company (AR)
- Arkansas-Louisiana Gas Company (KS)
- Arkansas-Louisiana Gas Company (LA)
- Arkansas-Oklahoma Gas Corporation (OK)
- Arkansas-Oklahoma Gas Corporation (AR)
- Arkansas Western Gas Company
- Associated Natural Gas Company (MO)
- Atlanta Gas Light Company
- Baltimore Gas & Electric Company
- Battle Creek Gas Company
- Bay State Gas Company
- Boston Gas Company
- Brooklyn Union Gas Company
- Carnegie Natural Gas Company
- Carolina Pipeline Company
- Cascade Natural Gas Corporation (OR)
- Cascade Natural Gas Corporation (WA)
- Central Hudson Gas and Electric Corporation (NY)
- Central Illinois Light Company
- Central Illinois Public Service Company
- Chattanooga Gas Company (TN)
- Cheyenne Light, Fuel and Power Company
- Cincinnati Gas and Electric Company
- Citizens Utilities Company (AZ)
- Citizens Utilities Company (CO)
- City Gas Company of Florida
- Colonial Gas Company
- Columbia Gas of Kentucky, Inc.
- Columbia Gas of Ohio, Inc.
- Columbia Gas of Pennsylvania, Inc.
- ComFurT Gas Incorporated (CO)
- Commonwealth Gas Company
- Commonwealth Gas Service Incorporated
- Commonwealth Gas Services, Incorporated (VA)
- Connecticut Natural Gas Corporation
- Consolidated Edison Company of New York, Inc.
- Consumers Power Company
- Dayton Power & Light Company
- Delmarva Power & Light Company (DE)
- East Ohio Gas Company
- Eastern Colorado Utility Company
- Elizabethtown Gas Company
- EnergyNorth Natural Gas, Inc. (NH)
- Enstar Natural Gas Company
- Entex Inc. (LA)
- Entex Inc. (MS)
- Entex Inc. (TX)
- Equitable Gas Company (PA)
- Equitable Gas Company (WV)
- Gas Company of New Mexico
- Gas Service, A Western Resources Company (MO)
- Gas Service Company (NE)
- Getty Gas Gathering, Inc. (KS)
- Greeley Gas Company (CO)
- Greeley Gas Company (KS)
- Gulf States Utilities Company
- Hope Gas, Incorporated
- Illinois Power Company
- Indiana Gas Company
- Intermountain Gas Company
- Interstate Power Company (IA)
- Interstate Power Company (MN)
- Iowa Electric Light & Power Company
- Iowa-Illinois Gas & Electric Company (IA)
- Iowa-Illinois Gas & Electric Company (IL)
- Iowa Southern Utilities Company
- Kansas-Nebraska Natural Gas Company (WY)
- K N Energy, Inc. (CO)
- K N Energy, Inc. (KS)
- KPL Gas Service Company (KS)
- KPL Gas Service Company (OK)
- Laclede Gas Company Consolidated
- Lone Star Gas Company, a division of ENSERCH Corp. (TX)
- Long Island Lighting Company
- Louisiana Gas Service Company
- Louisville Gas & Electric Company
- Madison Gas & Electric Company
- Michigan Consolidated Gas Company
- Michigan Gas Company
- Midwest Gas, Division of Iowa Public Service Company (MN)
- Midwest Gas, Division of Iowa Public Service Company (NE)
- Midwest Gas, Division of Iowa Public Service Company (SD)
- Midwest Gas, Division of Midwest Power Systems, Inc. (IA)
- Minnegasco—Division of Arkla, Inc. (MN)
- Minnegasco—Division af Arkla, Inc. (NE)
- Minnegasco—Division of Arkla, Inc. (SD)
- Mississippi Valley Gas Company
- Missouri Public Service Company
- Mobile Gas Service Corporation
- Montana-Dakota Utilities Company (MT)
- Montana-Dakota Utilities Company (ND)
- Montana-Dakota Utilities Company (SD)
- Montana-Dakota Utilities Company (WY)
- Montana Power Company
- Mountaineer Gas Company
- Mountain Fuel Supply Company (ID)
- Mountain Fuel Supply Company (UT)
- Mountain Fuel Supply Company (WY)
- Nashville Gas Company
- National Fuel Gas Distribution Corporation (NY)
- National Fuel Gas Distribution Corporation (PA)
- National Gas and Oil Company
- New Jersey Natural Gas Company
- New Orleans Public Service, Inc.
- New York State Electric & Gas Corporation
- Niagara Mohawk Power Company
- North Carolina Natural Gas Corporation
- North Shore Gas Company
- Northern Illinois Gas Company
- Northern Indiana Public Service Company
- Northern Minnesota Utilities-Division of UtiliCorp United, Inc.
- Northern Natural Gas Company (KS)
- Northern Natural Gas Company (NE)
- Northern States Power Company (MN)
- Northern States Power Company (ND)
- Northern States Power Company (WI)
- North Penn Gas Company
- Northwest Natural Gas Company (OR)
- Northwest Natural Gas Company (WA)
- Northwestern Public Service Company (NE)
- Northwestern Public Service Company (SD)
- Oklahoma Natural Gas Company
- Orange & Rockland Utilities
- Pacific Gas & Electric Company
- Panhandle Eastern Pipeline Company (IL)
- Panhandle Eastern Pipeline Company (KS)
- Pennsylvania Gas & Water Company
- Peoples Gas, Light and Coke Company
- Peoples Gas System
- Peoples Natural Gas Company
- Peoples Natural Gas Company (CO)
- Peoples Natural Gas Company, Division of UtiliCorp United, Inc. (IA)
- Peoples Natural Gas Company, Division of UtiliCorp United, Inc. (KS)
- Peoples Natural Gas Company, Division of UtiliCorp United, Inc. (MN)
- Peoples Natural Gas Company, Division of UtiliCorp United, Inc. (NE)
- Philadelphia Electric Company
- Piedmont Natural Gas Company (NC)
- Piedmont Natural Gas Company (SC)
- Providence Gas Company
- Public Service Company of Colorado
- Public Service Company of North Carolina, Inc.
- Public Service Electric and Gas Company
- Rochester Gas & Electric Corporation
- Rocky Mountain Natural Gas Division of K N Energy, Inc.
- San Diego Gas & Electric Company
- South Carolina Gas & Electric Company
- South Jersey Gas Company
- Southwestern Michigan Gas Company
- Southern California Gas Company
- Southern Connecticut Gas Company
- Southern Indiana Gas & Electric Company
- Southern Union Company (TX)
- Southern Union Gas Company (OK)
- Southwest Gas Corporation (AZ)
- Southwest Gas Corporation (CA)
- Southwest Gas Corporation (NV)
- Trans Louisiana Gas Company
- T.W. Phillips Gas and Oil Company
- UGI Corporation
- Union Electric Company
- Union Light, Heat & Power Company (KY)
- United Cities Gas Company (KS)
- United Cities Gas Company (GA)
- United Cities Gas Company, Great River Division
- Virginia Natural Gas
- Washington Gas Light Company (DC)
- Washington Gas Light Company (MD)
- Washington Gas Light Company (VA)
- Washington Natural Gas Company
- Washington Water Power Company (ID)
- Washington Water Power Company (OR)
- Washington Water Power Company (WA)
- West Ohio Gas Company
- Western Kentucky Gas Company
- Williams Natural Gas Company
- Wisconsin Fuel & Light Company
- Wisconsin Gas Company
- Wisconsin Natural Gas Company
- Wisconsin Power & Light Company
- Wisconsin Public Service Corporation (MI)
- Wisconsin Public Service Corporation (WI)
- Yankee Gas Services Company (CT)

Publicly-Owned:
- Citizens Gas & Coke Utility (IN)
- City of Fort Morgan Gas Dept. (CO)
- City of Richmond, Department of Public Utilities (VA)
- City Public Services Board (San Antonio, TX)
- Colorado Springs, Department of Public Utilities (CO)
- Long Beach Gas Department (CA)
- Memphis Light, Gas & Water Division (TN)
- Metropolitan Utilities District of Omaha (NE)
- Philadelphia Gas Works (PA)
- Springfield City Utilities (MO)
- Town of Ignacio Municipal Utilities (CO)
- Town of Rangley Gas Department (CO)

[FR Doc. 93–30373 Filed 12–10–93; 8:45 am]
BILLING CODE 6450–01–P

Western Area Power Administration

Inclusion of the Provo River Project With the Salt Lake City Area/Integrated Projects

AGENCY: Western Area Power Administration, DOE.

ACTION: Western Area Power Administration proposes to formally include the Provo River Project with the Salt Lake City Area/Integrated Projects.

SUMMARY: Western Area Power Administration (Western) proposes to formally include the Provo River Project (PRP) with the Salt Lake City Area/Integrated Projects (SLCA/IP) to enhance marketing of excess PRP power to specific SLCA/IP customers. The PRP is a small water development project in northern Utah with two 2.475-megawatt generators at Deer Creek Dam. During winter months, a majority of PRP power is used to compensate PacifiCorp Electric Operations (PacifiCorp) for an irrigation-water diversion. Power generated during summer months, and excess winter generation, is sold to the Colorado River Storage Project (CRSP), a group of hydropower plants and a component of the SLCA/IP. Western treats the PRP power purchase as nonfirm energy.

With the proposed marketing changes, Western would sell PRP power to the Intermountain Consumer Power Association (ICPA) and Utah Municipal Power Agency (UMPA) on a firm basis in the summer and nonfirm in the winter. The integration would also ensure that revenue is available to assist meeting the repayment obligation of the Provo River Water Users' Association (Association), the operator of the dam.

The PRP marketing changes would not affect dam operations in any way. Integration of the PRP into the SLCA/IP and the marketing changes would begin on April 1, 1994, the beginning of the summer season.

DATES: Comments must be received on or before January 12, 1994. A public information/comment/scoping meeting is scheduled for January 4, 1994.

FOR FURTHER INFORMATION CONTACT: Mr. Lloyd Greiner, Area Manager, Salt Lake City Area Office, Western Area Power Administration, P.O. Box 11606, Salt Lake City, UT 84247–0606, (801) 524–6372.

SUPPLEMENTARY INFORMATION:

Background

The Provo River Project

The primary function of the PRP is to provide irrigation, municipal, and industrial water to users in Salt Lake and Utah Counties, Utah. The Bureau of Reclamation finished construction of the dam in 1938 and the powerplant came on line in 1958.

On June 27, 1936, the Bureau of Reclamation signed contract number Ilr-874 making the Association responsible for repayment of the irrigation project. The initial investment in the power facilities was repaid in 1984. Surplus power revenues may be used to aid in the repayment of the irrigation investment.

During the winter months of October 15 through March 15, water may be diverted from the adjacent Weber River Basin into the Provo River and stored in Deer Creek Reservoir for irrigation purposes. The diversion creates a loss of power generation at the Riverdale and Weber Powerplants on the Weber River, downstream from the diversion. As a result, PacifiCorp, the owner of the Riverdale and Weber Powerplants, is reimbursed for its winter energy losses with PRP energy. During this winter period PRP generation above the reimbursement amount is sold to CRSP as nonfirm energy.

In 1992, two member-based organizations and customers of the SLCA/IP requested PRP power. Both of these organizations have customers in the vicinity of the PRP.

The Salt Lake City Area/Integrated Projects

The Salt Lake City Area Office markets Federal hydropower from Rio Grande, Collbran, and CRSP dams. Collectively, these hydropower generation facilities are called SLCA/IP. Western did not include the PRP during the integration of SLCA/IP for two reasons: First, CRSP was currently purchasing PRP power. Second, there were unresolved questions concerning Western's assistance in the repayment of the PRP irrigation investment.

In previous **Federal Register** notices, Western stated its intent to integrate the PRP with SLCA/IP. In the **Federal Register** notice on August 23, 1983 (48 FR 38289–38298), Western formally stated its intent to integrate the CRSP, Collbran, Rio Grande, and PRP.

However, in a **Federal Register** notice on February 7, 1986 (51 FR 4844), Western announced that the integration of the PRP with the Collbran, Rio Grande, and CRSP had been deferred. The **Federal Register** notice stated, "The Provo River Project hydroelectric resource operated within the SLCA by the Bureau of Reclamation may become part of the SLCA Integrated Projects upon the development of appropriate arrangements among affected parties."

Although the PRP was not formally included as part of SLCA/IP, it has for all practical purposes been integrated through CRSP power purchases. At this time, Western wishes to solicit public participation and comment prior to the formal integration of the PRP and the SLCA/IP.

Marketing Criteria

a. Applicability

In response to requests from UMPA and ICPA to receive power produced by the PRP, Western has examined the merits of reorganizing the marketing of the PRP resource. Western believes these proposed marketing changes will benefit both Western's SLCA/IP customers and the Association.

b. Market Resource and Service Season

The PRP, like most hydropower resources, has summer and winter marketing seasons. From April through September, most PRP energy and capacity is firm. From October through March, when PacifiCorp is reimbursed for its lost generation, any energy generated above the reimbursement amount is considered nonfirm.

Historically, marketable energy averaged 23,000,000 kilowatthours (kWh), with 15,000,000 kWh generated during summer months and the remaining 8,000,000 kWh from winter surplus energy. Summer generation above this amount, and winter generation not required to compensate PacifiCorp for the Weber/Provo water exchange, will be marketed by the SLCA/IP as nonfirm energy. Typically, about 3,000,000 kWh are available in each of the three peak summer months of June, July, and August; approximately 1,000,000 kWh are available in April; 2,500,000 kWh in May; and another 2,500,000 kWh in September.

c. Market Area

Western proposes to market this resource to ICPA and UMPA, which have members in Utah and Wasatch Counties, near the PRP. Affected members of ICPA are the cities of Heber City, Lehi, Payson, Springville, and the Strawberry Electric Service District. Affected members of UMPA are the cities of Provo, Salem, and Spanish Fork. Marketing of the PRP resource to these customers assures that each would receive a beneficial amount of power.

d. Resource Allocation

Western proposes to allocate PRP resources in proportion to the historical sales of each ICPA and UMPA member to realize the maximum benefit of the PRP. UMPA serves approximately 70 percent of the load in the marketing area

and the city of Provo is by far its largest customer. ICPA serves approximately 30 percent of the marketing area load. Proportional allocation of the PRP's estimated summer season output of 15,000,000 kWh would give a total summer season entitlement of 10,500,000 kWh and 3,500 kilowatts (kW) of capacity to UMPA members, and 4,500,000 kWh and 1,500 kW of capacity to ICPA members.

e. Contract Terms

ICPA and UMPA would pay for the PRP resource according to the current SLCA/IP firm power rate schedule for their firm power entitlements. Western would amend the SLCA/IP firm power sales contracts with ICPA and UMPA to include the increased entitlements of firm power. Western would allocate winter season nonfirm energy in the same relative proportions. ICPA would receive 2,400,000 kWh each winter season, and UMPA would receive 5,600,000 kWh. The contractors would pay Western $100,000 per year for the 8,000,000 kWh average nonfirm energy produced by PRP. SLCA/IP would purchase any energy above this amount at the rate established by a PRP power repayment study.

National Environmental Policy Act

a. Compliance

Western will comply with the National Environmental Policy Act of 1969 through preparation of an environmental assessment (EA) on the impacts of the proposed marketing changes.

Western has no operational control over the PRP. Deer Creek Dam is operated primarily for the benefit of irrigation. Power production is a secondary benefit and does not influence dam operations in any manner. Therefore, the proposed PRP marketing changes will have no effect on dam operations.

The PRP–SLCA/IP integration will have little effect on Western's Electric Power Marketing Environmental Impact Statement (EIS). Like the Seedskadee and Collbran Projects, Western will include the PRP as part of the SLCA/IP but exclude it from the analysis because Western has no operational control over the resource.

b. Process

Western's process for the EA will include (1) identification of issues; (2) identification of any sensitive or critical environmental impacts; (3) identification of issues concerning repayment of the PRP irrigation project; (4) identification of any reasonable alternatives; and (5) notification of groups, individuals, and agencies to obtain additional information concerning these issues. Western will hold a meeting to receive comments on marketing its proposal and issues to be addressed in the EA on Tuesday, January 4, 1994, at 7 p.m., Thurber School, 40 South Main Street, Spanish Fork, Utah.

Regulatory Flexibility Analysis

Pursuant to the Regulatory Flexibility Act of 1980 (5 U.S.C. 601 *et seq.*), each agency, when publishing a proposed rule, is further required to prepare and make available for public comment an initial regulatory flexibility analysis to describe the impact of the rule on small entities. Western has determined that (1) this rulemaking relates to services offered by Western and, therefore, is not a rule within the purview of the Act, and (2) the impacts of an allocation from Western would not cause an adverse economic impact to such entities. The requirements of this Act can be waived if the head of the agency certifies that the rule will not, if promulgated, have a significant economic impact on a substantial number of small entities. By execution of this **Federal Register** notice, Western's Administrator certifies that no significant economic impact on a substantial number of small entities will occur.

Determination Under Executive Order 12866

DOE has determined that this is not a significant regulatory action because it does not meet the criteria of Executive Order 12866, 58 FR 51735. Western has an exemption from centralized regulatory review under Executive Order 12866; accordingly, no clearance of this notice by OMB is required.

Issued in Golden, Colorado, November 22, 1993.

William H. Clagett

Administrator

[FR Doc. 93–30263 Filed 12–10–93; 8:45 am]

BILLING CODE 6450–01–P

ENVIRONMENTAL PROTECTION AGENCY

[FRL–4813–2]

Agency Information Collection Activities Under OMB Review

AGENCY: Environmental Protection Agency (EPA).

ACTION: Notice.

SUMMARY: In compliance with the Paperwork Reduction Act (44 U.S.C. 3501 *et seq.*), this notice announces that the Information Collection Request (ICR) abstracted below has been forwarded to the Office of Management and Budget (OMB) for review and comment. The ICR describes the nature of the information collection and its expected cost and burden.

DATES: Comments must be submitted on or before January 12, 1994.

FOR FURTHER INFORMATION CONTACT: For further information or to obtain a copy of this ICR contact Sandy Farmer at EPA, (202) 260–2740.

SUPPLEMENTARY INFORMATION:

Office of Solid Waste and Emergency Response

Title: Oil Pollution Prevention National Survey (EPA ICR No. 1668.01).

Abstract: This is a new information collection in support of the activities of the EPA's Oil Pollution Prevention Program. This program, also known as the Spill Prevention, Control and Countermeasures (SPCC) Program, was established under the authority of section 311 of the Clean Water Act, as promulgated at 40 CFR 112. The survey will gather site-specific information from a random sample of facility owners/operators subject to the current SPCC regulation. The purpose of the survey is to gain a better understanding of the characteristics of regulated facilities in order to evaluate the existing SPCC regulations, support revisions to the regulations, and improve future program implementation and outreach efforts. Responses to this survey will be mandatory pursuant to section 308 of the Clean Water Act.

The survey population will be drawn from a random sample of facilities from each industry that EPA has determined to have a high probability of storing oil in sufficient quantities to be regulated by the Oil Pollution Prevention Regulation. A subset of respondents will be selected for a pilot test of the survey to validate the survey design. Survey recipients that are exempt from the Oil Pollution Prevention regulation must certify their exemption and return the exemption certification form to the EPA. Survey recipients that store oil in sufficient quantities to be subject to the Oil Pollution Prevention Regulation must complete the survey, providing information that includes: (1) The size, type and location of the facility; (2) the size, number, and type of oil storage tanks; (3) the types of spill prevention systems at the facility; and (4) the number and size of oil discharges that have occurred at the facility. There are no recordkeeping requirements associated with this ICR.

The EPA will enter the information from completed surveys into a computerized database and perform statistical analyses to identify trends and characteristics of the SPCC universe.

Burden Statement: Public reporting burden for all respondents (those completing either the survey or the exemption certification) is estimated to average 1 hour response. Public reporting burden for respondents completing the survey ranges between 2.7 to 12.1 hours, with an average of 5.7 hours per response; public reporting burden for respondents completing the exemption form ranges between 0.2 to 0.5 hours per response. This includes the time for reviewing instructions, gathering and compiling the data needed, and completing and reviewing the survey questionnaire or exemption certification form.

Respondents: Owners/Operators of facilities that store oil, as defined at 40 CFR 112.1.

Estimated no. of respondents: 3,318 owners/operators will complete the survey, 24,503 will complete the exemption form.

Estimated responses per respondent: 1

Frequency of collection: One-time.

Estimated total annual burden on respondents: 27,488 hours

Send comments regarding the burden estimate, or any other aspect of this collection of information, including suggestions for reducing the burden to:

Sandy Farmer, U.S. Environmental Protection Agency, Information Policy Branch (PM–223Y), 401 M Street SW., Washington, DC 20460.

and

Jonathan Gledhill, Office of Management and Budget, Office of Information and Regulatory Affairs, 725 17th Street NW., Washington, DC 20503.

Dated: December 6, 1993.

David Schwarz,

Acting Director, Regulatory Management Division.

[FR Doc. 93–30353 Filed 12–10–93; 8:45 am]

BILLING CODE 6560–50–M

[FRL–4813–1]

Agency Information Collection Activities Under OMB Review

AGENCY: Environmental Protection Agency (EPA).

ACTION: Notice.

SUMMARY: In compliance with the Paperwork Reduction Act (44 U.S.C. 3501 *et seq.*), this notice announces that a technical correction to the Information Collection Request (ICR) abstracted below, presently under review of the Office of Management and Budget (OMB), has been forwarded to OMB for review and comment. Public comments on this ICR will continue to be taken for an additional 30 days.

DATES: Comments must be submitted on or before January 12, 1994.

FOR FURTHER INFORMATION OR A COPY OF THIS REVISED ICR CONTACT:
Sandy Farmer at EPA, (202) 260–2740.

SUPPLEMENTARY INFORMATION:

Office of Solid Waste and Emergency Response

Title: Information Requirements for Boilers and Industrial Furnaces: General Hazardous Waste Facility Standards, Specific Unit Requirements, and Part B Permit Application and Modification Requirements (EPA ICR # 1361.04; OMB No. 2050–0073). This is a technical correction to an ICR presently under OMB review. Notice for this renewal ICR was published at 58 FR 58696 (11/3/93).

Abstract: This ICR provides a comprehensive description of the requirements applicable to owners and operators of boilers and industrial furnaces (BIFs) burning hazardous waste as fuel, including general facility and permitting requirements that apply to facilities with BIFs.

Based on ongoing discussions between the Agency and OMB, this ICR has been revised to more accurately reflect all data collection activities associated with the requirements covered in the ICR. Burden and cost estimates have also been updated to reflect these revisions.

Burden Statement: The revised estimated average annual public burden per respondent for this collection of information is: 1,716 hours for reporting and 2,695 hours for recordkeeping for newly permitted facilities; 1,500 reporting and 2,692 recordkeeping hours for existing permitted facilities; 306 reporting and 2,869 recordkeeping hours for existing interim status facilities; 2 reporting and 23 recordkeeping hours for metal recovery and smelting, melting, and refining furnaces; and 13 reporting and 11 recordkeeping hours for small quantity on-site burners. These estimates include all aspects of the information collection, including time for reviewing instructions, gathering and maintaining the data needed, and preparing, reviewing, and submitting the collection of information.

Respondents: Owners/operators of boilers and industrial furnaces burning hazardous waste.

Estimated Number of Respondents: 179.

Frequency of Collection: On occasion.

Estimated Number of Responses per Respondent: Varies.

Estimated Total Annual Burden on Respondents: 559,570.

Send comments regarding the burden estimate, or any other aspect of this collection of information, including suggestions for reducing the burden, to:

Sandy Farmer, U.S. Environmental Protection Agency, Information Policy Branch (PM–223Y), 401 M Street SW., Washington, DC 20460.

and

Jonathan Gledhill, Office of Management and Budget, Office of Information and Regulatory Affairs, 725 17th Street NW., Washington, DC 20503.

Dated: December 7, 1993.

Paul Lapsley,

Director, Regulatory Management Division.

[FR Doc. 93–30352 Filed 12–10–93; 8:45 am]

BILLING CODE 6560–50–M

[FRL–4813–3]

Proposed Administrative Settlement Pursuant to the Comprehensive Environmental Response, Compensation and Liability Act of 1980, as Amended by the Superfund Amendments and Reauthorization Act

AGENCY: U.S. Environmental Protection Agency.

ACTION: Notice; request for public comment.

SUMMARY: In accordance with Section 122(i) of the Comprehensive Environmental Response, Compensation and Liability Act of 1980, as amended by the Superfund Amendments and Reauthorization Act of 1986 ("CERCLA"), 42 U.S.C. 9622(i), notice is hereby given that a proposed administrative cost recovery settlement concerning the Capitol Assay Laboratories Site, Baltimore City, MD was issued by the Agency on November 24, 1993. The settlement resolves an EPA claim under Section 107 of CERCLA, 42 U.S.C. 9607, against Edward A. St. John, MIE Development Company, Inc. and MIE Investment Company ("Settlors"). The settlement requires the Settlors to pay $35,000 to the Hazardous Substances Superfund.

For thirty (30) days following the date of publication of this notice, the Agency will receive written comments relating to the settlement. The Agency's response to any comments received will be available for public inspection at the

U.S. Environmental Protection Agency, Region III, 841 Chestnut Building, Philadelphia, PA 19107.

DATES: Comments must be submitted on or before January 12, 1994.

ADDRESSES: *Availability:* The proposed settlement and additional background information relating to the settlement are available for public inspection at the U.S. Environmental Protection Agency, Region III, 841 Chestnut Building, Philadelphia, PA 19107. A copy of the proposed settlement may be obtained from Suzanne Canning, U.S. Environmental Protection Agency, Regional Docket Clerk (3RC00), 841 Chestnut Building, Philadelphia, PA 19107. Comments should reference the "Capitol Assay Laboratories Site" and "EPA Docket No. III–93–32–DC" and should be forwarded to Suzanne Canning at the above address.

FOR FURTHER INFORMATION CONTACT: Patricia C. Miller (3RC22), Assistant Regional Counsel, U.S. Environmental Protection Agency, 841 Chestnut Building, Philadelphia, PA 19107 (215) 597–3440.

Dated: November 24, 1993.

Stanley L. Laskowski,

Acting Regional Administrator, U.S. Environmental Protection Agency, Region III.

[FR Doc. 93–30354 Filed 12–10–93; 8:45 am]

BILLING CODE 6560–50–M

[FRL–4812–9]

Notice of Proposed Administrative De Minimis Settlement Under Section 122(g)(4) of the Comprehensive Environmental Response, Compensation, and Liability Act, Regarding the Endicott Wellfield Superfund Site, Endicott, Broome County, NY

AGENCY: Environmental Protection Agency.

ACTION: Notice of proposed settlement and opportunity for public comment.

SUMMARY: In accordance with section 122(i) of the Comprehensive Environmental Response, Compensation, and Liability Act of 1980, as amended ("CERCLA"), 42 U.S.C. 9622(i), the United States Environmental Protection Agency ("EPA"), Region II, announces a proposed administrative *de minimis* settlement pursuant to section 122(g)(4) of CERCLA, 42 U.S.C. 9622(g)(4), relating to the Endicott Wellfield Superfund Site (the "Site"), located in the Village of Endicott, Broome County, New York. This Site is on the National Priorities List established pursuant to section 105(a) of CERCLA. This notice is being published to inform the public of the proposed settlement and the opportunity to comment.

The settlement, memorialized in an Administrative Order on Consent ("*De Minimis* Order"), is being entered into by EPA and George Industries, Inc. and Thunder Projects, Inc. (hereinafter referred to as the "*De Minimis* Parties"). The settlement resolves an EPA claim under sections 106 and 107(a) of CERCLA against the *De Minimis* Parties with respect to the Site. Under the *De Minimis* Order, the *De Minimis* Parties shall pay EPA the sum of $50,000, each.

For thirty (30) days following the date of publication of this notice, the Agency will receive written comments relating to the settlement.

DATES: Comments must be submitted on or before January 12, 1994.

ADDRESSES: Comments should be sent to: Eric Schaaf, Chief, New York/Caribbean Superfund Branch, Office of Regional Counsel, U.S. Environmental Protection Agency, 26 Federal Plaza, room 437, New York, N.Y. 10278. Comments should reference the Endicott Wellfield Superfund Site, Endicott, New York and EPA Index No. II CERCLA–122–93–0204. The *De Minimis* Order is available for public inspection at the following information repositories:

U.S. Environmental Protection Agency, Region II Office, 26 Federal Plaza, room 2900, New York, NY 10278.

Endicott Village Clerk's Office, Municipal Building, Endicott, New York 13760.

A copy of the *De Minimis* Order may also be obtained from the contact person listed below. EPA's response to any comments received will be available for public inspection at the aforementioned information repositories.

FOR FURTHER INFORMATION CONTACT: Princina S. Watts, Assistant Regional Counsel, New York/Caribbean Superfund Branch, Office of Regional Counsel, U.S. Environmental Protection Agency, 26 Federal Plaza, room 437, New York, NY 10278, Telephone: (212) 264–4876.

Dated: November 26, 1993.

Kathleen C. Callahan,

Acting Regional Administrator, U.S. Environmental Protection Agency, Region II.

[FR Doc. 93–30355 Filed 12–10–93; 8:45 am]

BILLING CODE 6560–50–M

FEDERAL DEPOSIT INSURANCE CORPORATION

Update to Notice of Financial Institutions for Which the Federal Deposit Insurance Corporation Has Been Appointed Either Receiver, Liquidator, or Manager

AGENCY: Federal Deposit Insurance Corporation.

ACTION: Update listing of financial institutions in liquidation.

SUMMARY: The Federal Deposit Insurance Corporation (Corporation) has adopted a policy statement concerning 12 U.S.C. 1825(b)(2) of the Financial Institutions Reform, Recovery, and Enforcement Act of 1989 and 28 U.S.C. 2410(c). The policy statement and an initial listing of financial institutions in liquidation were published in the July 2, 1992 issue of the **Federal Register** (57 FR 29491). The following is a list of financial institutions which have been placed in liquidation since the September 28, 1993 (58 FR 50549) publication.

FEDERAL DEPOSIT INSURANCE CORPORATION ACTIVE INSTITUTIONS IN LIQUIDATION ALPHA LISTING (NAME)

Institution name, city/state	Date closed, region	Ref. No.
Brentwood Thrift and Loan Association, Los Angeles, CA.	10/15/93, San Francisco.	4600
Century Thrift and Loan, Los Angeles, CA.	11/05/93, Western SC.	4603
Mid City Bank National Association, Brea, CA.	10/21/93, Western SC.	4601
Plaza Bank, N.A. of New Braunfels, New Braunfels, TX.	10/14/93, Southwest SC.	4599
Regent Thrift & Loan Assoc., San Francisco, CA.	09/16/93, San Francisco.	4597
The Bank of San Diego, San Diego, CA.	10/29/93, Western SC.	4602
Western United National Bank, Los Angeles, CA.	09/24/93, Western SC.	4598

Dated: December 7, 1993.

Federal Deposit Insurance Corporation.

Hoyle L. Robinson,

Executive Secretary.

[FR Doc. 93–30308 Filed 12–10–93; 8:45 am]

BILLING CODE 6714–01–M

FEDERAL MARITIME COMMISSION

Agreement(s) Filed; Part of Oakland/International Transportation Service, Inc. Terminal Agreement, et al.

The Federal Maritime Commission hereby gives notice of the filing of the following agreement(s) pursuant to section 5 of the Shipping Act of 1984.

Interested parties may inspect and obtain a copy of each agreement at the Washington, DC Office of the Federal Maritime Commission, 800 North Capitol Street NW., 9th Floor. Interested parties may submit comments on each agreement to the Secretary, Federal Maritime Commission, Washington, DC 20573, within 10 days after the date of the **Federal Register** in which this notice appears. The requirements for comments are found in § 572.603 of title 46 of the Code of Federal Regulations. Interested persons should consult this section before communicating with the Commission regarding a pending agreement.

Agreement No.: 224–010974–013.

Title: Port of Oakland/International Transportation Service, Inc. Terminal Agreement.

Parties:

Port of Oakland

International Transportation Service, Inc.

Synopsis: The proposed amendment increases the minimum annual crane guarantee and the annual TEU breakpoint guarantee levels as well as providing for secondary use incentives, and rental adjustments.

Agreement No.: 232–011439.

Title: Space Charter and Cooperative Working Agreement Between NOSAC and the NOSAC/NYK (North/South) Joint Service.

Parties:

NOSAC/NYK (North/South) Joint Service

NOSAC ANS

Synopsis: The proposed Agreement authorizes the parties to charter space aboard each other's vessels, discuss, and agree upon vessel capacity, space requirements, equipment interchange, and rationalize sailings in the trade between U.S. ports and points (including Alaska and the Hawaiian Islands) and Mexican, Central American, South American and Caribbean ports and points.

Agreement No.: 232–011440.

Title: Space Charter and Cooperative Working Agreement Between NYK and the NOSAC/NYK (North/South) Joint Service.

Parties:

NOSAC/NYK (North/South) Joint Service

Nippon Yusen Kabushiki Kaisha

Synopsis: The proposed Agreement authorizes the parties to charter space aboard each other's vessels, discuss, and agree upon vessel capacity, space requirements, equipment interchange, and rationalize sailings in the trade between U.S. ports and points (including Alaska and the Hawaiian Islands) and Mexican, Central American, South American and Caribbean ports and points.

Dated: December 7, 1993.

By Order of the Federal Maritime Commission.

Joseph C. Polking,

Secretary.

[FR Doc. 93–30330 Filed 12–10–93; 8:45 am]

BILLING CODE 6730–01–M

GENERAL SERVICES ADMINISTRATION

Steering Committee for the African Burial Ground, New York, NY; Meeting

Notice is hereby given that the Steering Committee for the African Burial Ground, New York, NY (Steering Committee) has (1) revised the date of its previously noticed regular monthly meeting for December, 1993 from December 27, 1993 to December 20, 1993 and (2) has scheduled it a regular monthly meeting for January 24, 1994. Meetings are now scheduled on the following dates: December 20, 1993 and January 24, 1994.

All meetings will begin at 6 p.m. and will be held in the 2nd floor archives of the Schomburg Center for Research in Black Culture, New York Public Library, 515 Malcolm X Boulevard (at 135th Street), New York, NY. Meetings may be continued to the following day(s), if necessary, and shall be so announced during the meeting. Seating may be limited. Please call (212) 264–0456 prior to each meeting to confirm the date, time, and location of the meeting.

At the meetings the Steering Committee will consider such matters properly coming before it under its charter and its rules and regulations.

All meetings will be open to the public. Members of the public at large, as may be recognized by the Chairman of the Steering Committee, will be permitted to speak at the meetings at designated times as provided in the resolutions and rules of the Steering Committee. In addition, written comments by any person may be directed to any aspect of the Steering Committee's mission and other questions regarding the Steering Committee's meetings may be directed to: Chairman Howard Dodson, Chief, Schomburg Center for Research in Black Culture, New York Public Library, 515 Malcolm X Boulevard, New York, NY 10037–1801, Tel: (212) 491–2200.

Copies of such written comments may be sent to Robert W. Martin, Acting Regional Administrator, General Services Administration, Region 2, 26 Federal Plaza, New York, NY 10278.

Dated: December 2, 1993.

Robert W. Martin,

Acting Regional Administrator, General Services Administration, Region 2.

[FR Doc. 93–30288 Filed 12–10–93; 8:45 am]

BILLING CODE 6820–34–M

DEPARTMENT OF HEALTH AND HUMAN SERVICES

Food and Drug Administration

[Docket No. 93N–0449]

Establishment of Prescription Drug User Fee Revenues and Rates for Fiscal Year 1994

AGENCY: Food and Drug Administration, HHS.

ACTION: Notice.

SUMMARY: The Food and Drug Administration (FDA) is announcing that it is establishing user fee revenues and rates for Fiscal Year (FY) 1994. The Prescription Drug User Fee Act of 1992 (the PDUFA) authorizes FDA to collect user fees for certain applications for approval of drug and biological products, on establishments where the products are made, and on such marketed products. Fees for applications, establishments, and products for FY 1993 were established by the PDUFA. Fees for FY 1994 and later years are to be determined by FDA using criteria delineated in the statute.

FOR FURTHER INFORMATION CONTACT: Michael Roosevelt, Office of Financial Management (HFA–120), Food and Drug Administration, 5600 Fishers Lane, Rockville, MD 20857, 301–443–4872.

SUPPLEMENTARY INFORMATION:

I. Background

The PDUFA (Pub. L. 102–571) establishes three different kinds of user fees. Fees are assessed on: (1) Certain types of applications and supplements

for approval of drug and biologic products, (2) Certain establishments where such products are made, and (3) Certain marketed products (21 U.S.C. 379h(a)). When certain conditions are met, FDA may waive or reduce fees (21 U.S.C. 379h(d)). Under the PDUFA, one-third of the total user fee revenue for each FY must come from each of the three types of fees.

For FY 1993, the total revenues to be derived from fees and the fee rates for each of the categories were established in the PDUFA (21 U.S.C. 379h(b)(1)). For FY 1994 through 1997, however, the PDUFA establishes only target total fee revenues and fees. For these years, FDA is authorized to increase the total fee revenues and to establish new fee rates for each of the three categories so that the revised total fee revenues are realized (21 U.S.C. 379h(c)).

This notice establishes total fee revenues and sets application, establishment, and product fee rates for FY 1994. These fees are retroactive to October 1, 1993, and will remain in effect through September 30, 1994. For fees already paid on applications and supplements submitted on or after October 1, 1993, FDA will notify applicants by telephone of the difference between fees paid and fees due under the new fee schedules. For applications and supplements submitted after December 13, 1993 the new fee schedule should be used. Invoices for establishment and product fees for FY 1994 will be issued in December 1993, using the new fee schedules.

II. Revenue Increase and Fee Adjustment Process

The PDUFA provides that total fee revenues for each FY, as set out in the original fee schedule (see 21 U.S.C. 379h(b)(1)), shall be increased by notice in the **Federal Register**. The increase must reflect the greater of: (1) the total percentage increase that occurred during the preceding FY in the Consumer Price Index (all items; U.S. city average) (the CPI), or (2) the total percentage pay increase for that FY for Federal employees, as adjusted for any locality-based payment applicable to employees stationed in the District of Columbia (see 21 U.S.C. 379h(c)(1)). The PDUFA also provides that within 60 days after the end of each FY, FDA shall adjust the user fee rates in each of the three categories of fees (application, establishment, and product) to achieve the revised total fee revenues. The new individual user fees must be adjusted in a manner that maintains the proportions established in the original fee schedules, so that approximately one-third of the revenues will come each from application, establishment, and product fees (21 U.S.C. 379h(c)(2)).

III. Total Fee Revenue Adjustment

For FY 1993, the total percentage increase in the CPI was 2.689 percent, whereas the increase in applicable Federal salaries was 4.230 percent. Thus, for computing the total fee revenues for FY 1994, the latter percentage applies. The new adjusted total fee revenue is computed by applying the increase as a percentage (104.230 percent), to the FY 1994 target fee revenue amount from the PDUFA schedule ($54,000,000). The FY 1994 total adjusted fee revenue amount then totals $56,284,200.

IV. Fee Calculations for Application, Establishment, and Product Fees

The PDUFA provides that in making adjustments to the user fee rates, the one-third proportionality must be maintained among application, product, and establishment fees. Thus, the amount of revenues to be obtained from each category are $18,761,400 ($56,284,200 divided by 3).

A. Application Fees

Application fees are assessed on each "human drug application," as defined in the PDUFA (see 21 U.S.C. 379g(1)). Application fees are levied for: (1) Approval of certain new drug applications submitted after September 1, 1992, under section 505(b)(1) of the Federal Food, Drug, and Cosmetic Act (the act) (21 U.S.C. 355(b)(1)); (2) for approval of an application for certain molecular entities or indications for use submitted after September 30, 1992, under section 505(b)(2) of the act (21 U.S.C. 355(b)(2)); (3) for initial certifications or approvals of antibiotic drugs submitted after September 1, 1992, under section 507 of the act (21 U.S.C. 357); and (4) for licensure of certain biological products under section 351 of the Public Health Service Act (42 U.S.C. 262).

Fees are assessed at different rates for qualifying applications depending on whether the applications are accompanied by clinical data on safety and effectiveness (other than bioavailability or bioequivalence studies) (21 U.S.C. 379h(a)(1)(A), 379h(b)). Applications submitted with clinical data are subject to the full application fee. Applications without clinical data, and supplements with clinical data, are assessed one-half the fee of applications with clinical data.

In most cases, a first payment of 50 percent of an application or supplement fee is due at the time the application or supplement is submitted (21 U.S.C. 379h(a)(1)(B)(i)). The final payment is due 30 days from the date FDA issues an action letter for the application (see 21 U.S.C. 379g(6)(B)), or at the time an application is withdrawn, unless FDA waives this portion of the fee (21 U.S.C. 379h(a)(1)(A)(ii)). If FDA refuses to file an application or supplement, one-half of the first payment is refunded to the applicant (21 U.S.C. 379h(a)(1)(D)).

In setting the specific rate for each type of fee, FDA was required to estimate the numbers of applications, supplements, establishments, and products that it expects will qualify for fees in FY 1994. For FY 1993, the PDUFA set fee revenues from applications and supplements at $12,000,000. Application fees were set at $100,000 for qualifying applications with clinical data, and $50,000 for applications without clinical data and for supplements with clinical data (21 U.S.C. 379h(b)(1)).

For FY 1993 FDA received and filed 72 applications with clinical data, 16 applications without clinical data, and 59 supplements with clinical data. Because applications without clinical data and supplements with clinical data are assessed only one-half the full fee (that is, one-half the fee due on an application with clinical data), the equivalent number of these applications subject to the full fee is determined by summing these categories and dividing by 2. This amount is then added to the number of applications with clinical data to arrive at the equivalent number of applications subject to full application fees.

In addition, as of September 30, 1993, FDA refused to file, or there were withdrawn before filing, 22 applications with clinical data, and 6 applications without clinical data. After refunds, each of the former applications paid one-fourth the full application fee and are counted as one-fourth of an application. Similarly, after refunds each of the latter applications paid one-eighth of the full application fee rate and are counted as one-eighth of an application.

Using this methodology, the approximate equivalent number of applications with clinical data submitted in FY 1993 was 116, before any decisions were made on requests for waivers or reductions. FDA believes that the equivalent number of applications for FY 1994 will closely approximate the number submitted in FY 1993, after allowing for possible waivers or reductions. Thus, the FY 1994 application fee rate is determined by dividing the adjusted total fee revenue to be derived from applications

($18,761,400), by the equivalent number of applications projected to be submitted in FY 1994 (116), for a fee of $162,000 per application with clinical data (rounded to the nearest $1,000). A fee of one-half this amount or $81,000 applies to applications without clinical data and to supplements with clinical data. The following calculations summarize the determination of FY 1994 application fee rates:

- 72 applications with clinical data, + 16 + 2 applications without clinical data, + 59 + 2 supplements with clinical data, + 22 + 4 applications with clinical data refused to file/withdrawn before filing, + 6 + 8 other applications/supplements refused to file/withdrawn before filing = 116 (the estimated number of "full fee" applications for FY 1994 based on FY 1993 experience).
- $18,761,400 (FY 1994 estimated revenue to be derived from applications) + 116 (the estimated number of applications for FY 1994) = $162,000 per application (rounded to nearest $1,000).
- For applications without clinical data and supplements with clinical data the rate will be one-half the full application fee or $81,000.

B. Establishment Fees

The PDUFA FY 1993 establishment fee revenue of $12,000,000 was based on an estimate of 200 firms subject to establishment fees, at a fee rate of $60,000 per establishment. In FY 1993, 207 establishments qualified for fees, before any decisions on requests for waivers or reductions were made. FDA estimates that approximately 200 will qualify for fees in FY 1994, after allowing for possible waivers or reductions. Thus, the number 200 was used in setting the new establishment fee rate. The fee per establishment is determined by dividing the adjusted total fee revenue to be derived from establishments ($18,761,400), by the estimated 200 establishments, for an establishment fee rate for FY 1994 of $93,800 (rounded to the nearest $100).

C. Product Fees

The PDUFA FY 1993 product fee of $6,000 was based on an estimate that 2,000 products would be subject to product fees in FY 1993. For FY 1993, 2,200 products qualified for fees, before any decisions on requests for waivers or reductions were made. However, FDA estimates that only 2,000 products will qualify for product fees in FY 1994, after allowing for possible waivers or reductions. This estimate is based on information obtained by the agency that some applications will be withdrawn and some products will be withdrawn from the market and therefore not be subject to fees. Accordingly, the FY 1994 product fee rate was determined by dividing the adjusted total fee revenue to be derived from product fees ($18,761,400), by the estimated 2,000 products, for a product fee rate for FY 1994 of $9,400 (rounded to the nearest $100).

V. Adjusted Fee Schedules for FY Year 1994

The fee rates for FY 1994 are set out in the following table:

FEE CATEGORY	FEE RATES FOR FY 1994
APPLICATIONS	
With clinical data	$162,000
Without clinical data	81,000
Supplements with clinical data	81,000
ESTABLISHMENTS	93,800
PRODUCTS	9,400

VI. Implementation of Adjusted Fee Schedules

A. Application Fees

Any application or supplement subject to fees under the PDUFA that is submitted after December 13, 1993 must be accompanied by the appropriate application fee established in the new fee schedule. FDA will telephone applicants who submitted qualifying applications between October 1, 1993, and December 13, 1993 regarding any payment balance due as a result of the adjusted fee schedule. Such applications will be considered incomplete if appropriate fee payment is not made by January 12, 1994.

B. Establishment and Product Fees

By December 31, 1993, FDA will issue invoices for establishment and product fees for FY 1994 under the new fee schedules. Payment will be due by January 31, 1994. FDA will issue invoices in October 1994 for any products and establishments subject to fees for FY 1994 that qualify for fees after the December 1993 billing.

Dated: December 7, 1993.

Michael R. Taylor,

Deputy Commissioner for Policy.

[FR Doc. 93–30277 Filed 12–7–93; 3:22 pm]

BILLING CODE 4160–01–F

Health Care Financing Administration

[HSQ–200–NC]

RIN 0938–AF89

Medicare Program; Peer Review Organization, General Criteria and Standards for Evaluating Performance of Contract Obligations

AGENCY: Health Care Financing Administration (HCFA), HHS.

ACTION: Notice with comment period.

SUMMARY: This notice provides the general criteria and standards that will be used to determine if Group I Utilization and Quality Control Peer Review Organization (PRO) contracts should be noncompetitively renewed or extended on or after September 30, 1994. The Group I PROs include Delaware, Missouri, Montana, Nebraska, Nevada, Oklahoma, Rhode Island, South Carolina, Washington, and Wyoming. Section 1153(h)(2) of the Social Security Act requires that we publish these criteria and allow an opportunity for public comment.

DATES: Comments will be considered if we receive them at the appropriate address, as provided below, no later than 5 p.m. on February 11, 1994.

ADDRESSES: Mail written comments (1 original and 3 copies) to the following address: Health Care Financing Administration, Department of Health and Human Services, Attention: HSQ–200–NC, P.O. Box 7517–0517, Baltimore, MD 21207.

If you prefer, you may deliver your written comments (1 original and 3 copies) to one of the following addresses:

Room 309–G, Hubert H. Humphrey Building, 200 Independence Avenue SW., Washington, DC 20201, or

Room 132, East High Rise Building, 6325 Security Boulevard, Baltimore, MD 21207.

Because of staffing and resource limitations, we cannot accept comments

by facsimile (FAX) transmission. In commenting, please refer to file code HSQ–200–NC. Comments received timely will be available for public inspection as they are received, generally beginning approximately 3 weeks after publication of a document, in Room 309–G of the Department's offices at 200 Independence Avenue, SW., Washington, DC, on Monday through Friday of each week from 8:30 a.m. to 5 p.m. (phone: (202) 690–7890).

FOR FURTHER INFORMATION CONTACT: Kathleen Kelso, (410) 966–7214.

SUPPLEMENTARY INFORMATION:

I. Background

A. Program Description

The Peer Review Improvement Act of 1982 (title I, subtitle C of the Tax Equity and Fiscal Responsibility Act of 1982 (TEFRA), Pub. L. 97–248) amended part B of title XI of the Social Security Act (the Act) by establishing the PRO program. The PRO program was established in order to redirect, simplify and enhance the cost-effectiveness and efficiency of the medical peer review process. Sections 1153(b) and 1153(c) of the Act define the types of organizations eligible to become PROs and establish certain limitations and priorities regarding PRO contracting. In 42 CFR part 462, subpart C, of our regulations, we describe the types of organizations eligible to become PROs. In § 462.101, we require they (a) be either a physician-sponsored organization as described in § 462.102, or a physician access organization as described in § 462.103; and (b) demonstrate their ability to perform the review requirements set forth in § 462.104.

Section 1154 of the Act requires that PROs review those services furnished by physicians, other health care professionals, providers, and suppliers as specified in their contract with the Secretary. The Secretary enters into contracts with PROs to review certain health care services or proposed services paid for by the Federal Government to determine whether those services are reasonable, medically necessary, furnished in the appropriate setting, and of a quality that meets professionally recognized standards of health care.

HCFA began awarding contracts to PROs in June, 1984. We currently maintain 53 PRO contracts with organizations that provide medical review activities for 50 States, the District of Columbia, Puerto Rico, the Virgin Islands, American Samoa, Guam, and the Northern Mariana Islands.

Under section 1153(h)(2) of the Act, the Secretary is required to publish in the **Federal Register** the general criteria and standards that will be used to evaluate the efficient and effective performance of contract obligations by PROs and provide the opportunity for public comment. The criteria in this notice will be used to monitor formally PRO performance and capability and to determine whether the Group I PROs whose contracts end September, 1994 should have their contracts renewed on a non-competitive basis for another 3 years, extended for a shorter period, or non-renewed. The Group I PROs include Delaware, Missouri, Montana, Nebraska, Nevada, Oklahoma, Rhode Island, South Carolina, Washington, and Wyoming. (With respect to health maintenance organization (HMO) and competitive medical plan (CMP) review, the Secretary maintains the right to determine when competitive procurement of external quality review is in the best interest of the Government, as provided in Public Law 99–272 and Public Law 99–509. For example, the competitive procurement process may provide an incentive for development of new review systems.)

B. Measuring PRO Performance

We have developed criteria and standards for evaluating performance based on the Scope of Work (SOW) common to the Group I contracts. The standards and criteria focus on the following areas: communication, data management, cost management, medical review activities, quality review, management/responsiveness, and HMO/CMP reviews. Additional criteria, appropriate for work particular to a certain contract, may also be included as part of the PRO's negotiated contract agreement. We will use the evaluation criteria in this notice in several ways to monitor and assess contractor performance.

HCFA will use the criteria to determine whether the PRO contract should be renewed on a non-competitive basis, extended, or non-renewed and subsequently awarded through competitive bidding. (Performance will be one factor in determining if it is in the best interest of the Government to procure competitively contracts for HMO external quality review). HCFA will complete its review of PRO performance in early 1994 using the performance standards set forth in this notice, so that it can make a renewal or extension decision before the current Group I contracts expire in the fall of 1994. Contracts that are renewed or extended for 6 months or more will receive additional reviews if appropriate.

The HCFA regional offices, which are responsible for the daily oversight of PRO operations, use the criteria as a basis for monitoring PRO performance, identifying deficiencies in performance, and developing corrective action plans to improve performance to a satisfactory level. If a PRO is unable to improve its performance, HCFA may withhold contract payments or initiate termination actions.

HCFA will also use these standards to monitor the PROs' implementation of the Health Care Quality Improvement Initiative (HCQII). HCQII is being implemented by Group I PROs in April, July, or October, 1993. In implementing HCQII, PROs will place less emphasis on individual clinical concerns and focus more attention on helping physicians improve the overall quality of care. Under HCQII, PROs will share their analysis of patterns of care and outcomes with physicians and providers to improve care. This evaluation will serve as an early warning system to identify instances in which the PRO is not undertaking the basic activities necessary to be successful in performing HCQII activities.

C. Public Comments on New Incentives for Superior Performance

A major challenge of the PRO program is maintaining accountability for the efficient use of limited Federal resources and compliance with contractual standards without constraining program effectiveness. We are requesting comments on methods and mechanisms to identify, measure, and provide appropriate incentives for superior performance by PROs. Specifically, we request comments concerning:

- Ways to recognize, measure and encourage cost-effective PRO innovation and adaptation to unique and changing review environments;
- Introduction of HCFA-approved, cost-effective and innovative review methods and technologies as an additional criterion for evaluating PRO performance;
- Specific ways to strengthen the linkage of existing information systems and the coordination between certifying and monitoring entities;
- Specific ways to reduce redundant oversight and make more effective use of scarce resources at the local, State, and Federal levels; and
- Appropriate acknowledgments of and incentives for increased PRO effectiveness. For example, we are interested in comments covering:

—Increased contract flexibility;
—Pilot project funding;

—Greater flexibility in selecting review methodologies;
—Greater flexibility in targeting review resources; and
—Opportunities to train other PRO staff.

We will review these comments and will consider them in our ongoing effort to improve the effectiveness and efficiency of the PRO program.

II. General Criteria and Standards

A. Need for Group I Notice

This notice provides the general criteria and standards for the evaluation of the Group I PROs' performance for contracts that are scheduled to expire September, 1994. A separate notice is required for Group I PROs because they operate under a SOW unique to their contracts and therefore need to be evaluated based on a different set of criteria than other PROs. Between April and October of 1993, the Group I PROs are implementing HCQII. Since HCQII will be the next 3-year contract cycle, we believe the performance of these PROs in implementing HCQII is an important feature in determining if their contracts should be noncompetitively renewed or extended. Therefore, the performance criteria for Group I PROs include the ability to implement HCQII.

Additionally, a separate notice is required because these PROs operate under cost contracts (in previous contracts, the payment they received from Medicare was not affected by the costs they incurred). Thus, the standards and criteria set forth in this notice provide for evaluation of the ability of the Group I PROs to perform activities in a cost-effective manner. We will publish a separate **Federal Register** notice concerning revised criteria and standards for all 53 PROs entering into contracts beginning with the next contract cycle.

B. Satisfactory Performance

As noted above, section 1153(h)(2) of the Act requires that we publish the general criteria and standards and provide an opportunity for public comment. Individual contracts may require the inclusion of additional specific evaluation criteria and standards in selected contracts that are not set forth in this notice. The general criteria and standards provide the basis for all current contract monitoring activities. The evaluation criteria and performance standards used to assess the effectiveness and efficiency of PROs are based on our experience in evaluating PRO contract proposals and PRO contractor performance, as well as on our experience in evaluating other contractors. At this time, we are soliciting comments only on revisions to the general criteria and standards and not on any other aspect of our contractor performance review processes or methodologies.

HCFA has established standards to be evaluated to ensure that the PROs perform satisfactorily in accordance with the SOW and their signed contract. Failure to meet all of the standards may result in nonrenewal of the contract. HCFA will establish the satisfactory performance level for each of the evaluation areas. If the evaluation reveals that a PRO's performance is less than satisfactory, the PRO can still meet the performance standard if:

- The PRO successfully completes a HCFA-approved corrective action plan;
- The performance problem is corrected; and
- The above are accomplished in the required timeframe.

C. Evaluation Criteria and Standards

Two discrete criteria sets are presented. The first criteria set contains elements common to all Group I PRO contracts and applies to all Group I PROs. The second criteria set is a supplement for use in evaluating the contract performance of those PROs whose contracts include the review of services furnished to Medicare beneficiaries by HMOs and CMPs.

1. Evaluation Criteria Set I

The final evaluation period for Group I PROs began in April, 1993, but not all Group I PROs have begun implementation of HCQII activities at the same time. Some PROs began in April, or July 1993, and others will implement HCQII in October 1993. As a result, the emphasis of the final evaluation will differ depending on the date that the PRO began HCQII activities. For example, for those PROs implementing the new HCQII requirements early in the review period, HCFA will place greater weight on the implementation of HCQII, and may choose not to evaluate selected standards that are not as relevant to HCQII. However, in each case, HCFA will make its decision on contract renewal based on the information available at the time of the evaluation concerning the PRO's ability to be successful in another 3-year contract.

We will evaluate the following areas in assessing the fulfillment of contractual obligations by the Group I PROs:

- *Communication.* This area evaluates whether the PRO takes the necessary steps to ensure the support, understanding and participation of all of the constituencies that are affected by the PRO program to improve the quality of health care to Medicare beneficiaries. Specific standards include:

—The PRO successfully informs Medicare beneficiaries/enrollees about their rights and PRO activities, including where applicable, HMO/CMP review. This includes being responsive to requests from Medicare beneficiaries for meetings and presentations and acting appropriately as a result of comments to improve its communications processes.
—The PRO develops and implements effective educational feedback activities to ensure the support, understanding and participation of physicians, providers, HMOs/CMPs and other organizations affected by PRO activities.

- *Data Management.* This section reflects the PRO's ability to submit accurate reports and send adjustments to intermediaries in a timely manner. Specific standards include:

—The PRO submits acceptable reports, including reports of case review, as required in the current Data Users Guide. This includes the timely correction of errors detected by the PRO or the regional office.
—The PRO identifies the need for a payment adjustment and submits the adjustment to the Part A intermediary/carrier in a timely and accurate manner.

- *Cost Management.* This area measures the ability of the PRO to control costs. The evaluation standard is:

—The PRO operates efficiently in accomplishing its contract activities and remains within its approved budget.

- *Review Activities.* This area measures the PRO's performance in carrying out its medical review activities. The standards include:

—The PRO makes correct inpatient hospital review decisions. The PRO identifies quality and utilization problems and responsible parties.
—The PRO accurately validates Diagnosis Related Groups (DRGs) reported by hospitals.
—The PRO makes correct ambulatory surgery review decisions. The PRO determines if the procedure was medically necessary, identifies quality problems and responsible parties.
—The PRO accurately conducts review of beneficiary/enrollee complaints, reconsiderations of denials, re-reviews of DRG/Current Procedural Terminology–4 changes and final quality concerns in a timely manner

and notifies appropriate parties (including intermediaries and carriers of full and partial reversals) of the results. The PRO fulfills its responsibilities with respect to all levels of appeal including requests for Administrative Law Judge (ALJ) hearings.

—The PRO complies with SOW and PRO Manual requirements when requests are received for review of allegations of section 1867 violations (anti-dumping) or allegations of fraud and abuse.

• *Quality Review.* This area evaluates the PRO's performance in carrying out quality review activities.

—The PRO accurately profiles quality problems including documentation of appropriate action.

—The PRO implements timely and appropriate interventions as required by the SOW, evaluates their effectiveness, revises them if necessary, and issues letters clearly describing the nature of the problem and the action to be taken.

—The PRO complies with its HCFA-approved sanction plan. This includes the use of mandatory sanction notices, the approval of action plans that address the sanctionable problem, and the development of complete reports to the Office of Inspector General (OIG).

• *Management/Responsiveness.* This area evaluates the performance of the PRO in implementing HCQII, correcting problems identified by the regional office, and applying the limitation of liability provisions to denied services, as well as correctly reviewing cases involving hospital-issued notices of noncoverage (HINNs).

—The PRO responds appropriately and timely to HCFA requests for corrective action and performance improvement plans, and to HCFA and OIG requests for information.

—The PRO has put into place all mechanisms required for successful performance of HCQII activities (for example, maintaining adequate computer capacity and completing pre-existing corrective action plans).

—The PRO correctly applies the limitation of liability provision to denied services, including the determination and application of the presumptive limitation of liability status where swing bed hospital services are denied; correctly monitors hospitals' issuance of "An Important Message from Medicare" (the Message); and correctly reviews cases involving HINNs.

2. Evaluation Criteria Set II

We will evaluate PRO performance in HMO/CMP activities using Evaluation Criteria Set I as applicable, along with the two separate standards unique to HMO/CMP review that are described below:

• *HMO/CMP Review*

—The PRO makes correct decisions on HMO review including identifying quality problems (for example premature discharges or lack of access to care).

—The PRO performs an appropriate amount of reviews in accordance with its SOW requirements.

III. Regulatory Impact Statement

This notice with comment period complies with the requirement in section 1153(h)(2) of the Act that the Secretary publish performance criteria for PROs and provide an opportunity for public comment. The requirements set forth in this notice will not have an economic impact on PROs. Therefore, we have determined and the Secretary certifies that no analyses are required under the Regulatory Flexibility Act (5 U.S.C. 601 through 612), or section 1102(b) of the Act.

IV. Other Required Information

A. Reporting/Recordkeeping Requirements

This notice does not impose information collection requirements.

B. Response to Comments

Publication of the evaluation criteria provides notice to all affected and interested parties and affords them the opportunity to express their views. We expect that this process will result in evaluation criteria that provide a comprehensive and equitable evaluation system. Because of the large number of items of correspondence we normally receive as a result of a notice, we are not able to acknowledge or respond to public comments individually. If the evaluation criteria are revised as a result of this process, we will publish a subsequent notice explaining the changes and respond to public comments in that notice.

Authority: Section 1153 of the Social Security Act (42 U.S.C. 1320c–2).

(Catalog of Federal Domestic Assistance Program No. 93.773, Medicare—Hospital Insurance; and Program No. 93.774, Medicare—Supplementary Medical Insurance Program)

Dated: August 24, 1993.

Bruce C. Vladeck,

Administrator, Health Care Financing Administration.

[FR Doc. 93–30337 Filed 12–10–93; 8:45 am]

BILLING CODE 4120–01–P

National Institutes of Health

Developmental Therapeutics Contracts Review Committee; Meeting

Pursuant to Public Law 92–463, notice is hereby given of the meeting of the Developmental Therapeutics Contracts Review Committee, National Cancer Institute, National Institutes of Health, on January 6–7, 1994, at Building 31, Conference Room 6, 9000 Rockville Pike, Bethesda, Maryland 20892.

This meeting will be open to the public from 9 a.m. to 10 a.m. on January 6 to discuss administrative details. Attendance by the public will be limited to space available.

In accordance with provisions set forth in secs. 522b(c)(4) and 552b(c)(6), title 5, U.S.C. and sec. 10(d) of Public Law 92–463, the meeting will be closed to the public on January 6 from 10 a.m. to recess and on January 7 from 9 a.m. to adjournment for the review, discussion, and evaluation of individual contract proposals. These proposals and the discussions could reveal confidential trade secrets or commercial property such as patentable material and personal information concerning individuals associated with the proposals, disclosure of which would constitute a clearly unwarranted invasion of personal privacy.

The Committee Management Officer, National Cancer Institute, Executive Plaza North, room 630E, National Institutes of Health, 9000 Rockville Pike, Bethesda, Maryland 20892–9903, Tel. (301) 496–5708, will provide a summary of the meeting and a roster of the committee members upon request.

Dr. Harvey P. Stein, Scientific Review Administrator, Contracts Review Branch, Division of Extramural Activities, National Cancer Institute, National Institutes of Health, Executive Plaza North, room 601C, 9000 Rockville Pike, Bethesda, Maryland 20892–9903, Tel. (301) 496–7030, will furnish substantive program information.

Individuals who plan to attend and need special assistance such as sign language interpretation or other reasonable accommodations should contact Ms. Alma O. Carter on (301) 496–7523 in advance of the meeting.

(Catalog of Federal Domestic Assistance Program Numbers: 93.393, Cancer Cause and

Prevention Research; 93.394, Cancer Detection and Diagnosis Research; 93.395, Cancer Treatment Research; 93.396, Cancer Biology Research; 93.397, Cancer Centers Support; 93.398, Cancer Research Manpower; 93.399, Cancer Control)

Dated: December 7, 1993.

Susan K. Feldman,

Committee Management Officer, NIH.

[FR Doc. 93–30376 Filed 12–10–93; 8:45 am]

BILLING CODE 4140–01–M

Social Security Administration

Social Security Ruling SSR 93–3; Disappearance of a Child Beneficiary—Restriction Against Payment to a Missing Beneficiary

AGENCY: Social Security Administration, HHS.

ACTION: Notice of social security ruling.

SUMMARY: In accordance with 20 CFR 422.406(b)(1), the Commissioner of Social Security gives notice of Social Security Ruling 93–3. This Ruling concerns continuing to pay benefits to a child beneficiary who disappeared mysteriously and is still missing. The Social Security Administration (SSA) has no legal authority to pay benefits to individuals who are not entitled to them. SSA has an obligation to protect the Social Security Trust Funds. Therefore, SSA would be justified in suspending benefits until the status or whereabouts of the missing child has been determined.

EFFECTIVE DATE: December 13, 1993.

FOR FURTHER INFORMATION CONTACT: Joanne K. Castello, Office of Regulations, Social Security Administration, 6401 Security Boulevard, Baltimore, MD 21235 (410) 965–1711.

SUPPLEMENTARY INFORMATION: Although we are not required to do so pursuant to 5 U.S.C. 552 (a)(1) and (a)(2), we are publishing this Social Security Ruling in accordance with 20 CFR 422.406(b)(1).

Social Security Rulings make available to the public precedential decisions relating to the Federal old-age, survivors, disability, supplemental security income, and black lung benefits programs. Social Security Rulings may be based on case decisions made at all administrative levels of adjudication, Federal court decisions, Commissioner's decisions, opinions of the Office of the General Counsel, and other policy interpretations of the law and regulations.

Although Social Security Rulings do not have the force and effect of the law or regulations, they are binding on all components of the Social Security Administration, in accordance with 20 CFR 422.406(b)(1), and are to be relied upon as precedents in adjudicating other cases.

If this Social Security Ruling is later superseded, modified, or rescinded, we will publish a notice in the **Federal Register** to that effect.

(Catalog of Federal Domestic Assistance Programs Nos. 93.802 Social Security—Disability Insurance; 93.803 Social Security—Retirement Insurance; 93.805 Social Security—Survivors Insurance; 93.806 Special Benefits for Disabled Coal Miners; 93.807 Supplemental Security Income)

Dated: November 19, 1993.

Shirley S. Chater,

Commissioner of Social Security.

Sections 202(d) and 205 (i) and (j) of the Social Security Act (42 U.S.C. 402(d) and 405 (i) and (j)) Disappearance of a Child Beneficiary—Restriction Against Payment to a Missing Beneficiary

20 CFR 404.352(b), 404.705 and 404.2001

After a child beneficiary disappeared mysteriously, the Social Security Administration (SSA) suspended her benefits. The beneficiary's mother, also the representative payee for the child, protested on the basis that she needed the funds to help finance the search for her daughter and requested that benefits be reinstated. SSA reinstated the benefits pending further review.

Five years have now elapsed since the beneficiary disappeared. The question here is whether SSA should continue benefit payments for the missing beneficiary when it is not known whether she is still alive and entitled to the benefits.

Held, based on the circumstances in this case, further payment of benefits should be suspended until the beneficiary's whereabouts and continuing eligibility for benefits have been determined.

On June 3, 1988, the child beneficiary disappeared. At that time she was 7 years old. Her mother believes that she may have been abducted by an unknown person(s). Since that date there have been no reported sightings of her, she has not been in contact with any relatives, and it is not known whether she is still alive. No determination has been made by any Federal or State agency about the reason for her disappearance or whether she may be still alive.

SSA initially suspended benefits in 1988. SSA reinstated the benefits when the child's mother maintained that the benefits were being used on behalf of the beneficiary, that is, to search for her with the intent of restoring her to her family environment. However, despite the passage of a lengthy period of time, there is no information available as to whether the child remains alive and entitled to benefits.

Under the provisions of the Social Security Act (the Act) (section 202(d)), and its implementing regulation (20 CFR 404.352(b)), a minor child who is entitled to benefits is eligible to receive such benefits until the child marries, attains age 18 (unless a full-time student or disabled), or dies (whichever occurs first). Such payments are usually certified to a representative payee to be used for the child's interests.

The Act does not provide SSA with authority to expend Trust Funds in the form of benefit payments to individuals who are not entitled to those payments. Since the beneficiary who is missing may not continue to be eligible for benefits, SSA will suspend benefits until the beneficiary's eligibility can be determined. Social Security Ruling 90–6 (C.E 1990–1991, p. 39) explains:

> There is no authority for making representative payment if the beneficiary has disappeared or is believed to be deceased. * * * The Secretary was justified in suspending the beneficiary's benefits until such time as her status or whereabouts have been determined.

Furthermore, according to section 205(i) of the Act, SSA must certify to the Secretary of the Treasury the address of a person entitled to receive payments and the time when the payments shall be made. It is appropriate to suspend or terminate payment of benefits when SSA does not know the address of the beneficiary or whether payments should be made at a particular time due to uncertainty about eligibility.

In this case, the passage of time and lack of any contact with the missing child since 1988 create substantial doubt about her continuing eligibility for benefits. According to information from the Federal Bureau of Investigation, the longer the duration of an unresolved child abduction, the less likelihood there is that the child will be returned. Therefore, under the circumstances in this case, there is sufficient uncertainty about the child's continuing eligibility for benefits to justify the suspension of benefits until her status can be determined.

[FR Doc. 93–30331 Filed 12–10–93; 8:45 am]

BILLING CODE 4190–29–P

DEPARTMENT OF THE INTERIOR

Bureau of Land Management

[AZ-020-04-4140-05; LEAS]

Notice of Intent To Prepare an Environmental Impact Statement

AGENCY: Department of Interior, Bureau of Land Management.

ACTION: Rescheduled scoping meeting dates; notice of intent to prepare an environmental impact statement; Cyprus Casa Grande Mine; Tohono O'Odham Nation, Papago Indian Reservation, Arizona.

SUMMARY: Per the correction published in the November 24, 1993 edition of the Federal Register (page 62130), the public scoping meetings for determining issues regarding the proposed large scale open pit copper mine at Cyrpus Casa Grande Mine and the Notice of Intent to Prepare an Environmental Impact Statement are scheduled as follows:

January 8, 1994, Komelik, AZ, Saturday, 9 a.m., District Center
January 10, 1994, Sells, AZ, Monday, 6 p.m., Council Chambers
January 12, 1994, Santa Rosa, AZ, Wednesday, 6 p.m., District Center
January 13, 1994, Chui Chu, AZ, Thursday, 6 p.m., Elderly Center
January 18, 1994, Casa Grande, AZ, Tuesday, 6 p.m., Holiday Inn

A detailed summary regarding this proposal was published in the November 12, 1993, Federal Register (page 60048). Meeting times listed in that publication are superseded by the information listed.

For further information contact Moon Hom, Mining Engineer, Bureau of Land Management, 2015 West Deer Valley Road, Phoenix, Arizona 85027, phone (602) 780-8090.

Dated: December 3, 1993.

David J. Miller,

Acting District Manager.

[FR Doc. 93-30289 Filed 12-10-93; 8:45 am]

BILLING CODE 4310-32-M

[ES-940-5700-10-241A]

General Land Office Automated Records Project

AGENCY: Bureau of Land Management, Interior.

ACTION: Notice of availability.

SUMMARY: The Bureau of Land Management (BLM) gives notice that the BLM General Land Office (GLO) Automated Records Project is expanded to include the availability of the patent attribute data base on Compact Disk and remote access via computer terminals with modems.

DATES: December 13, 1993.

ADDRESSES: Information about the GLO Automated Records Project can be obtained by writing to: Bureau of Land Management, Eastern States, Attention: Public Services Section, 7450 Boston Boulevard, Springfield, Virginia 22153.

SUPPLEMENTARY INFORMATION: The BLM Eastern States maintains the original GLO tract books that show how, when, and to whom title to public domain lands passed from the United States—in the States of Alabama, Arkansas, Florida, Illinois, Indiana, Iowa, Louisiana, Michigan, Minnesota, Missouri, Mississippi, Wisconsin, and parts of Ohio. The tract books record land transactions dating back to 1778. The BLM also has responsibility for the 5 million land patent documents that the tract books recorded.

The BLM initiated the GLO Automated Records Project because it recognized the need to protect and preserve these patent records, and make them more accessible. The Project provides the capability to scan, index, store, update, and retrieve images and attribute data for the images of the GLO patent documents. To protect them from further deterioration, BLM retires the original patent documents from daily public use after entry into the GLO Automated Records System.

The automated database is now available for the States of Florida, Arkansas, Louisiana, Mississippi, Michigan, Minnesota, Ohio, and Wisconsin for patents issued for cash entries and homesteads before July 1, 1908. Queries to the database can be made in six areas: Patent authority, patentee name, land office, certificate number, legal land description, and county. As they are completed, the rest of the patents will come "on-line."

The attribute database for the automated patent documents are being recorded onto Compact Disks-Read Only Memory (CD-ROM).

Note: The CD-ROM will not operate on either MacIntosh computers or computers with monochrome screens.

Beginning in October 1993, the Government Printing Office (GPO) began selling the CD-ROMs of the patent attribute data base for the State of Arkansas. The CD-ROMs for the States of Florida, Louisiana, Mississippi, Ohio, Minnesota, Michigan, and Wisconsin will be available for sale in 1994 from GPO at the rate of one State CD-ROM every two or three months. Persons wishing to purchase the CD-ROMs should contact: Superintendent of Documents, Government Printing Office, P.O. Box 371954, Pittsburgh, Pennsylvania 15250-7954 (202) 512-1526.

Remote retrieval of the data base using a computer and modem is also available, 24 hours a day, for the States that are automated. Anyone wishing to access the GLO System by remote retrieval must contact the BLM Public Service Section at 703-440-1600 and establish a GLO System Remote Users' Account. System support is provided from 8 a.m. to 5 p.m. (Eastern time), Monday through Friday (excluding holidays) by the BLM's Eastern States Office in Springfield, Virginia. Paper copies of document images can be requested by remote access users via the modem and faxed or mailed to the user. Rates for using the system follow established BLM cost recovery guidelines (Reference **Federal Register** Volume 57, No. 243, page 60001).

When users of the CD-ROM request copies of documents, the following prices apply:

$1.25 for an uncertified copy of a one page document
$0.13 for each additional page of a multi-page document
$0.25 to certify a document

Please use the order form provided on the CD-ROM when ordering documents.

Note: The price schedule above replaces the prices given on the Arkansas CD-ROM Document Image Ordering Form, October 1993. This new price schedule is in effect for all GLO CD-ROM's.

FOR FURTHER INFORMATION CONTACT: The Public Service Section of BLM Eastern States at 703-440-1600.

Dated: December 3, 1993.

Carson W. Culp, Jr.,

State Director.

[FR Doc. 93-30290 Filed 12-10-93; 8:45 am]

BILLING CODE 4310-GJ-M

National Park Service

Urban Park and Recreation Recovery Program

AGENCY: National Park Service, Interior.

ACTION: Notice of FY-1994 Grant Round—UPARR Rehabilitation and Innovation Grants.

SUMMARY: This notice announces the availability of grant funds under the Rehabilitation and Innovation phases of the Urban Park and Recreation Recovery (UPARR) Program and provides information on the application process including eligible recipients and deadlines for submission of proposals.

FOR FURTHER INFORMATION CONTACT: "UPARR," Recreation Grants Division,

National Park Service, Department of the Interior, P.O. Box 37127, Washington, DC 20013–7127; (202) 343–3700.

SUPPLEMENTARY INFORMATION: Five million dollars ($5,000,000) has been appropriated by Congress for Fiscal Year 1994 funding of Rehabilitation and Innovation projects under the Urban Park and Recreation Recovery Act of 1978 (Pub. L. 95–625). NPS will consider proposals for funding projects with a dollar limit of $200,000 (Federal share of total project cost) under the Rehabilitation phase of the program and projects with a dollar limit of $50,000 (Federal share) under the Innovation phase. No more than ten percent ($500,000) of the total amount appropriated will go toward the funding of Innovation proposals. Preapplications must be received by the appropriate NPS Regional Office by no later than April 15, 1994.

Rehabilitation grants will be targeted to rehabilitate existing neighborhood recreation areas and facilities which have deteriorated to the point where health and safety are endangered or the community's range of quality recreation service is impaired. Proposals must be designed to provide recreation services for residents within a specified area identified by the applicant. Proposals may identify improvements at multiple sites or facilities, each of which must be individually addressed. Grants may be used to remodel, rebuild, expand, or develop existing outdoor or indoor recreation areas and facilities.

Innovation grants may generally cover the costs of personnel, training, facilities, recreation equipment, supplies or services associated with the development of cost-effective ideas, concepts, and approaches towards improving facility design, operations, or programming for the delivery of recreation services.

Innovation projects should contribute to a systems approach to recreation by linking recreation services with other critical community programs such as housing, transportation, health and public safety, water quality, energy conservation, crime prevention, etc. The project should demonstrate a concept that is untried, unique, and/or advances the state of the art for recreation at the national, regional or local level. Interested jurisdictions are directed to 36 CFR § 72.45 for more detailed discussion of fundable elements under the Innovation phase of the UPARR program.

Eligible Jurisdictions

Urban jurisdictions as listed in 36 CFR part 72 appendix B will be eligible. Additional jurisdictions meeting the criteria for eligibility described in 36 CFR part 72 appendix A, and having been approved as discretionary applicants by NPS, may also compete. All applicants must have a Recovery Action Program (RAP) which has been approved by NPS within the past five years, and all projects must be in accord with the priorities outlined in the approved RAPs.

Grant Implementation and Timing

Grantees must comply with all applicable Federal laws and regulations for the UPARR program, which include completion of a final grant agreement within 120 days of a grant offer (based on NPS evaluation of preapplications submitted for consideration).

Preapplication Requirements

Local Chief Executives applying for UPARR grants will be required to certify, in the preapplication, that the grantee will comply with all requirements of the UPARR program. Applicants must certify that they have adequate control and tenure over properties to be assisted through UPARR and must identify in their applications the type of control they have over those properties. Additional requirements are outlined in the UPARR Preapplication Handbook available from the Regional Offices of NPS.

Matching Requirements

UPARR Rehabilitation and Innovation grants are awarded on a 70/30 (Federal/local) matching basis. As an incentive for state involvement in the program, the Federal Government will match, dollar for dollar, state contributions to the local share of the total project cost, up to 15 percent of the approved grant. The Federal share is limited to no more than 85 percent of the approved grant cost and the overall dollar limitations established above for Rehabilitation and Innovation grants, respectively.

Pass-Through Funding

At the discretion of the applicant jurisdiction, grants may be transferred, in whole or in part, to independent general or special purpose local governments, private nonprofit agencies or community groups, and county or regional park authorities that provide recreation opportunities to the general population within the jurisdictional boundaries of the applicant jurisdiction. In such situations, the applicant jurisdiction will bear full legal responsibility and liability for passed-through funds.

Post-Completion Requirements

In accordance with Section 1010 of the UPARR Act of 1978, assisted properties may not be converted to other than public recreation use without the prior approval of NPS and the replacement of the converted site or facility with one of reasonably equivalent usefulness and location. This provision may not be applicable to funded Innovation projects depending upon the nature of the assistance provided.

FOR FURTHER INFORMATION CONTACT: Interested jurisdictions should consult their NPS Regional Office for further information including grant round schedule dates and for technical assistance in applying for funding. The NPS Regional Offices are listed below:

Mid-Atlantic:	
Chief, Planning & Grants Assistance Division, National Park Service, 200 Chestnut Street—room 502, Philadelphia, PA 19106, 215–597–7995.	CT, DC, DE, MA, MD, ME, NH, NJ, NY, PA, RI, VA, VT, WV.
Mid-West:	
Assistant Regional Director for Recreation Assistance Programs, National Park Service, 1709 Jackson Street, Omaha, NE 68102–2571, 402–221–3201.	IA, IL, IN, KS, MI, MN, MO, NE, OH, WI.
Pacific Northwest:	
Chief, Recreation Programs Division, National Park Service, 909 First Avenue, Seattle, WA 98104–1060, 206–220–4083.	AK, ID, OR, WA.
Rocky Mountain:	
Chief, Division of National Recreation Programs, National Park Service, P.O. Box 25287, Denver, CO 80225–0287, 303–969–2850.	CO, MT, ND, SD, UT, WY.
Southeast:	
Chief, Grants Division, National Park Service, 75 Spring Street, 10th Floor, Atlanta, GA 30303, 404–331–2610.	AL, FL, GA, KY, MS, NC, PR, SC, TN, VI.

Southwest:	
Assistant Regional Director for External Programs, National Park Service, P.O. Box 728, Santa Fe, NM 87501, 505–988–6705.	AR, LA, NM, OK, TX.
Western:	
Chief, Grants Branch, Division of Planning, Grants and Environmental Quality, National Park Service, 600 Harrison Street—suite 600, San Francisco, CA 94107–1372, 415–744–3972.	AS, AZ, CA, GU, HI, NV, CM.

(Catalog of Federal Domestic Assistance #15.919)

Authority: Title X, National Parks and Recreation Act of 1978, Pub. L. 95–625, 16 U.S.C. 2501–2514.

Dated: December 8, 1993.

Sam Hall,

Chief, Recreation Grants Division, National Park Service.

[FR Doc. 93–30383 Filed 12–10–93; 8:45 am]

BILLING CODE 4310–70–P

National Park System Advisory Board; Meeting

AGENCY: National Park Service, Interior.

ACTION: Notice of meeting of History Areas Committee of National Park System Advisory Board.

SUMMARY: Notice is hereby given in accordance with the Federal Advisory Commission Act that a meeting of the History Areas Committee of the Secretary of the Interior's National Park System Advisory Board will be held at 9 a.m. on the following date and at the following location.

DATES: January 11, 1994.

LOCATION: Department of the Interior, Conference Room 7000, Main Interior Building, 1849 C Street, NW., Washington, DC.

FOR FURTHER INFORMATION CONTACT: Ben Levy, Senior Historian, History Division, National Park Service, P.O. Box 37127, suite 310, Washington, DC 20013–7127. Telephone (202) 343–8164.

SUPPLEMENTARY INFORMATION: The purpose of the meeting of the History Areas Committee of the Secretary of the Interior's National Park System Advisory Board is to evaluate studies of historic properties in order to advise the full National Park System Advisory Board meeting on March 7, 1994, of the qualifications of properties being proposed for National Historic Landmark (NHL) designation, and to recommend to the full board those properties that the committee finds meet the criteria of the National Historic Landmarks Program. The members of the History Areas Committee are:

Dr. Holly Anglin Robinson, CHAIR
Mr. F. C. Duke Zeller, VICE CHAIR
Lt. Governor of Michigan Connie B. Binsfeld
Mr. Paul F. Cole
Ms. Carrel Cowan-Ricks
Dr. Stuart Kaufman
Mr. Karl A. Komatsu
Judge Robert Flynn Orr
Mr. Roger L. Williams, *ex officio*

The meeting will include presentations and discussions on the national historic significance and the historic integrity of a number of properties being nominated for National Historic Landmark designation. These nominations are:

Seven properties in the field of architecture:

First Presbyterian Church (Old Whalers), Sag Harbor, New York
Lanier Mansion, Madison, Indiana
Shrewsbury (Charles) House, Madison, Indiana
Sturges (Jonathan) House (The Cottage), Fairfield, Connecticut
Adams Academy, Quincy, Massachusetts
Vizcaya, Miami, Florida
Carew Tower-Netherland Hotel, Cincinnati, Ohio

Two properties in the field of art:

Austin (A. Everett) House, Hartford, Connecticut
Pollock (Jackson) House and Studio, East Hampton, New York

Five properties in the field of science and technology:

Montgomery Bell Tunnel, White Bluff, Tennessee
Union Canal Tunnel, Lebanon, Pennsylvania
Staple Bend Tunnel, Conemaugh Township, Pennsylvania
Detroit River Railroad Tunnel, Detroit, Michigan
Air Force Facility Missile Site 8 (Titan II ICBM Site 571–7), Green Valley, Arizona

One de-designation: Sourdough Lodge, Gakona, Alaska

Six individual properties:

Opana Radar Site, Honolulu County, Hawaii
Lukens Historic District, Coatesville, Pennsylvania
Little Tokyo Historic District, Los Angeles, California
Campbell Mansion, Bethany, West Virginia
Meridian Hill Park, Washington, District of Columbia
Tenement Building at 97 Orchard Street, New York, New York

Six properties in maritime history:

Adventure, Gloucester, Massachusetts
Nellie Crockett, Georgetown, Maryland
Edna E. Lockwood, St. Michaels, Maryland
William B. Tennison, Solomons, Maryland
Hilda M. Willing, Tilghman Island, Maryland
Kathryn, Tilghman Island, Maryland

Two properties relating to Civil War history:

Mill Springs Battlefield, Pulaski and Wade Counties, Kentucky
Camden Expedition Sites, Clark, Cleveland, Grant, Hempstead, Nevada, Ouachita, and Pulaski Counties, Arkansas

Three individual archeological properties:

Caparra Archeological Site, Guaynabo, Puerto Rico
Bottle Creek Site, Baldwin County, Alabama
Chucalissa Site, Shelby County, Tennessee

The committee will also review and may make recommendations on the following special resource studies:

New Bedford, Massachusetts
Quincy, Massachusetts

The committee may also review and make recommendations on various other special resource studies for sites in Kansas and Hawaii, in addition to status reports on the special resource studies program for fiscal year 1993.

The meeting will be open to the public. However, facilities and space for accommodating members of the public are limited. Any member of the public may file with the committee a written statement concerning matters to be discussed. Written statements may be submitted to Ben Levy, Manager, National Historic Landmarks Survey, History Division (418), National Park Service, P.O. Box 37127, suite 310, Washington, DC 20013–7127.

Dated: December 8, 1993.

Rowland T. Bowers,

Deputy Associate Director, Cultural Resources, National Park Service, Washington Office.

[FR Doc. 93–30382 Filed 12–10–93; 8:45 am]

BILLING CODE 4310–70–P

DEPARTMENT OF LABOR

Office of the Secretary

Petition and Data Collection Forms for NAFTA Transitional Adjustment Assistance Program

AGENCY: Office of the Secretary, Labor.

ACTION: Request for expedited review under the Paperwork Reduction Act.

SUMMARY: The Employment and Training Administration (ETA), Department of Labor, in carrying out its responsibilities under the Paperwork Reduction Act (44 U.S.C. chapter 35, 5 CFR part 1320 (53 FR 16618, May 10, 1988)), is submitting a request for approval to the Office of Management and Budget for a petition form and data collection forms to be used for the NAFTA Transitional Adjustment Assistance program. ETA has requested an expedited review of this submission under the Paperwork Reduction Act; this OMB review has been requested to be completed by December 20, 1993.

FOR FURTHER INFORMATION CONTACT: Comments and questions regarding the information collections should be directed to Kenneth A. Mills, Departmental Clearance Officer, Office of Information Management, U.S. Department of Labor, 200 Constitution Avenue, NW., room N–1301, Washington, DC 20210, (202) 219–5095.

Comments should also be sent to the Office of Information and Regulatory Affairs, Attn: OMB Desk Officer for ETA, Office of Management and Budget, room 3001, Washington, DC 20503, (202) 395–7316.

The North American Free Trade Agreement-Transitional Adjustment Assistance program (NAFTA–TAA) is intended to provide support and assistance for any workers whose employment is adversely affected as a result of the North American Free Trade Agreement Implementation Act. A petition for certification of eligibility to apply for NAFTA–TAA may be filed by a group of workers or by their authorized representative with the Governor of the State in which their firm is located. Within ten days, the Governor will make a preliminary finding as to whether the petition meets certain criteria of the NAFTA–TAA program. The Governor will then forward the petition to the Secretary of Labor who will make a determination of eligibility for adjustment assistance services. The NAFTA–TAA program will become operational on January 1, 1994. A petition form and data collection forms have been designed specifically for the NAFTA–TAA program to assist the Governor and the Secretary of Labor in determining whether workers meet the criteria for eligibility for adjustment assistance under the NAFTA–TAA program.

Any member of the public who wants to comment on the information collection clearance package which has been submitted to OMB should advise Mr. Mills of this intent at the earliest possible date.

Petition Form (ETA 9042)

Average Burden Hours: ¼ hour
Frequency of Response: As needed
Number of Respondents: 1,350
Annual Burden Hours: 338 hours
Annual Responses: One
Affected Public: Individuals or households; farms
Respondents Obligation To Reply: Voluntary

Confidential Data Forms (ETA 9043)

Average Burden Hours: 3 hours
Frequency of Response: As needed
Number of Respondents: 1,350
Annual Burden Hours: 4,050 hours
Annual Responses: One
Affected Public: Business or other for-profit; small businesses or organizations
Respondents Obligation To Reply: Mandatory

Customer Survey Form (ETA 9044)

Average Burden Hours: 1 hour
Frequency of Response: As needed
Number of Respondents: 9,315
Annual Burden Hours: 9,315 hours
Annual Responses: One
Affected Public: Business or other for-profit; small businesses or organizations
Respondents Obligation To Reply: Mandatory

Signed at Washington, DC, this 8th day of December 1993.

Kenneth A. Mills,

Departmental Clearance Officer.

[FR Doc. 93–30245 Filed 12–10–93; 8:45 am]

BILLING CODE 4510–30–M

Employment and Training Administration

[TA–W–26,062]

General Dynamics, Fort Worth Division, A/K/A Lockheed, Fort Worth Company, Fort Worth, TX; Amended Certification Regarding Eligibility To Apply for Worker Adjustment Assistance

In accordance with Section 223 of the Trade Act of 1974 (19 U.S.C. 2273) the Department of Labor issued a Certification of Eligibility To Apply for Worker Adjustment Assistance applicable to all workers of General Dynamics, Fort Worth Division, Fort Worth, Texas. The certification notice was issued on October 31, 1991 and published in the **Federal Register** on November 13, 1991 (56 FR 57667).

At the request of the State Agency, the Department reviewed the certification for workers of the subject firm. The investigation findings show that the Lockheed Corporation purchased the General Dynamics Fort Worth facility in 1993 and some of the claimants' wages are reported under a UI tax account for Lockheed Corporation.

Accordingly, the Department is amending the certification to properly reflect the correct worker group.

The amended notice applicable to TA–W–26,062 is hereby published as follows:

"All workers producing wire harnesses at General Dynamics, Fort Worth Division also known as (a/k/a) Lockheed, Fort Worth Company, Fort Worth, Texas who became totally or partially separated from employment on or after June 29, 1990 and before October 31, 1993 are eligible to apply for adjustment assistance under Section 223 of the Trade Act of 1974."

Signed at Washington, DC, this November 30, 1993.

Marvin M. Fooks,

Director, Office of Trade Adjustment Assistance.

[FR Doc. 93–30357 Filed 12–10–93; 8:45 am]

BILLING CODE 4510–30–M

Investigations Regarding Certifications of Eligibility to Apply for Worker Adjustment Assistance

Petitions have been filed with the Secretary of Labor under Section 221(a) of the Trade Act of 1974 ("the Act") and are identified in the Appendix to this notice. Upon receipt of these petitions, the Director of the Office of Trade Adjustment Assistance, Employment and Training Administration, has instituted investigations pursuant to Section 221(a) of the Act.

The purpose of each of the investigations is to determine whether the workers are eligible to apply for adjustment assistance under Title II, Chapter 2, of the Act. The investigations will further relate, as appropriate, to the determination of the date on which total or partial separations began or threatened to begin and the subdvision of the firm involved.

The petitioners or any other persons showing a substantial interest in the subject matter of the investigations may request a public hearing, provided such request is filed in writing with the

Director, Office of Trade Adjustment Assistance, at the address shown below, not later than December 23, 1993.

Interested persons are invited to submit written comments regarding the subject matter of the investigations to the Director, Office of Trade Adjustment Assistance, at the address shown below, not later than December 23, 1993.

The petitions filed in this case are available for inspection at the Office of the Director, Office of Trade Adjustment Assistance, Employment and Training Administration, U.S. Department of Labor, 200 Constitution Avenue, NW., Washington, DC 20210.

Signed at Washington, DC this 22nd day of November, 1993.

Marvin M. Fooks,

Director, Office of Trade Adjustment Assistance.

APPENDIX

Petitioner (union/workers/firm)	Location	Date received	Date of petition	Petition No.	Articles produced
JC & Me (ILGWU)	Holsopple, PA	11/22/93	11/10/93	29,233	Ladies' Sleepwear.
UNOCAL/Molycorp, Inc (Co)	Louviers, CO	11/22/93	11/08/93	29,234	Rare Earth Elements.
Natural Casing Co (Wkrs)	Peshtigo, WI	11/22/93	11/12/93	29,235	Sausage Casings.
F. Bruno Faceting, Inc (Co)	Union, NJ	11/22/93	11/12/93	29,236	Costume Jewelry.
Uniroyal Goodrich Tire Co (URW)	Ft. Wayne, IN	11/22/93	11/12/93	29,237	Light Truck Tires.
Slyter Chair, Inc (USWA)	Tacoma, WA	11/22/93	11/05/93	29,238	Home Furniture.
Alda Oil and Gas Corp (Co)	Oklahoma City, OK	11/22/93	10/20/93	29,239	Exploration, Production of Oil, & Gas.
The Aro Corp (Co)	Buffalo, NY	11/22/93	11/05/93	29,240	Aircraft Life Support Products & Oxygen.
Armco Advanced Materials (Wkrs)	Butler, PA	11/22/93	11/11/93	29,241	Steel Coils, Sheets, and Etc.
B-5 Welding Special Service (Wkrs)	Seminole, TX	11/22/93	11/11/93	29,242	Refined and Finished Petroleum.
Cinderella Knitting Mills (Co)	Leesport, PA	11/22/93	11/04/93	29,243	Knit T-Shirts and Men's Briefs.
Cinderella Knitting Mills (Co)	Gastonia, NC	11/22/93	11/04/93	29,244	Cloth for Lightweight Underwear.
E.I. Dupont DeNemours (Co)	Parlin, NJ	11/22/93	11/10/93	29,245	Graphic Arts Film.
General Glass Industries (ABGWIU)	Jeannette, PA	11/22/93	11/08/93	29,246	Sheet Glass.
Greenbrier Industries (Wkrs)	Clinton, TN	11/22/93	11/03/93	29,247	Military Products.
Hillside Sportswear (Wkrs)	Shamorin, PA	11/22/93	11/08/93	29,248	Ladies' Dresses.
MG Products (IBEW)	Independence, OH	11/22/93	11/08/93	29,249	Lighting Fixtures.
Isratex, Inc (Co)	Winfield, AL	11/22/93	10/29/93	29,250	Denim Jeans.
Jefferson City Zinc (USWA)	Jefferson City, TN	11/22/93	11/05/93	29,251	Zinc Ore and Concentrate.
Neste Oil, Inc (Wkrs)	Houston, TX	11/22/93	11/08/93	29,252	Oil and Gas.
Plains Petroleum Operating Co (Wkrs)	Lakewood, CO	11/22/93	11/08/93	29,253	Crude Oil.
Reed & Barton Silversmiths (RWDSU)	Taunton, MA	11/22/93	11/05/93	29,254	Holloware and Flatware.
Lamb Grays Harbor Co (Wkrs)	Hoquiam, WA	11/22/93	10/06/93	29,255	Machinery for Finishing Paper.
Fruehauf Corp, Delphos Parts Plant (UPIU).	Delphos, OH	11/22/93	11/01/93	29,256	Truck Trailer Parts.

[FR Doc. 93-30358 Filed 12-10-93; 8:45 am]

BILLING CODE 4510-30-M

[TA-W-28,496]

Jones & Lamson Waterbury Farrell Corporation; Cheshire, CT; Revised Determination on Reopening

On November 29, 1993, the Department reopened its investigation for workers and former workers of the subject firm. The initial investigation resulted in a denial for workers in Cheshire, Connecticut. The denial notice was published in the Federal Register on October 29, 1993 (58 FR 58187).

New investigation findings on reopening show that a major customer accounting for a significant portion of the decline in sales in fiscal year 1993 compared with fiscal year 1992 increased its purchases of imported metal working machinery in the relevant period.

The findings show that worker separations occurred at the subject firm in 1992 and the plant closed on April 30, 1993.

Conclusion

After careful consideration of the new facts obtained on reopening, it is concluded that increased imports of articles like or directly competitive with metal working machinery produced by Jones & Lamson Waterbury Farrell Corporation, Cheshire, Connecticut contributed importantly to the decline in sales and production and to the total or partial separation of workers at Jones & Lamson Waterbury Farrell Corporation, Cheshire, Connecticut.

In accordance with the provisions of the Trade Act of 1974, I make the following revised determination:

"All workers and former workers of Jones & Lamson Waterbury Farrell Corporation, Cheshire, Connecticut who became totally or partially separated from employment on or after March 17, 1992 are eligible to apply for adjustment assistance under Section 223 of the Trade Act of 1974."

Signed at Washington, DC this 2nd day of December 1993.

Marvin M. Fooks,

Director, Office of Trade Adjustment Assistance.

[FR Doc. 93-30359 Filed 12-10-93; 8:45 am]

BILLING CODE 4510-30-M

[TA-W-28,706]

Leslie Fay, Castlebrook Division, A/K/A Castleberry Division, New York, New York; Revised Determination of Reopening

On December 1, 1993, the Department, at the request of the petitioners reopened its investigation for the former workers of Leslie Fay's Castlebrook Division, a/k/a Castleberry Division in New York, New York. The initial investigation resulted in a negative determination on August 10, 1993 because the workers did not produce an article within the meaning of the Trade Act.

A review of the investigation files shows that the Castlebrook Division was merged into the Castleberry Division in 1992 which produces sample dresses.

Findings on reopening show that the Castleberry Division had decreased sales and employment in 1992 and 1993. Other findings show that Leslie Fay has increased imports of ladies' dresses which are like or directly competitive with those produced by Castleberry.

Conclusion

After careful consideration of the new facts obtained on reopening, it is concluded that increased imports of articles like or directly competitive with ladies' dresses produced by the Castleberry Division of Leslie Fay contributed importantly to the decline in sales or production and to the total or partial separation of workers at the subject facilities. In accordance with the provisions of the Trade Act of 1974, I make the following revised determination:

"All workers and former workers of Leslie Fay's Castlebrook Division, also known as (a/k/a) Castleberry Division, New York, New York who became totally or partially separated from employment on or after April 20, 1992 are eligible to apply for adjustment assistance under Section 223 of the Trade Act of 1974."

Signed at Washington, DC, this 2nd day of December 1993.

Marvin M. Fooks,

Director, Office of Trade Adjustment Assistance.

[FR Doc. 93–30360 Filed 12–10–93; 8:45 am]

BILLING CODE 4510–30–M

Advisory Council on Unemployment Compensation; Hearing

SUMMARY: The Advisory Council on Unemployment Compensation (ACUC) was established in accordance with the provisions of the Federal Advisory Committee Act on January 24, 1992, (**Federal Register**, February 3, 1992, pg. 4067). Public Law 102–164, the Emergency Unemployment Compensation Act of 1991, mandated the establishment of the Council to evaluate the overall unemployment insurance program, including the purpose, goals, counter-cyclical effectiveness, coverage, benefit adequacy, trust fund solvency, funding of State administrative costs, administrative efficiency, and other aspects of the program; and to make recommendations for improvement. The Council has also been directed to focus on specific subjects such as the use of regional or sub-state triggers for the Extended Benefit (EB) program, the work search requirement for the EB program, and eligibility and unemployment coverage for alien agricultural labor.

TIME AND PLACE: The hearing will be held from 1:30 p.m. to 5 p.m. on January 11, 1994 and from 1:30 p.m. to 5 p.m. on January 12, 1994 at the Sheraton Palace Hotel, Mendocino Room, 2 Montgomery Street, San Francisco, California.

PUBLIC PARTICIPATION: The hearing will be open to the public. Seating will be available to the public on a first-come, first-served basis. Seats will be reserved for the media. Handicapped individuals should contact the Designated Federal Official (DFO), listed below, if special accommodations are needed.

SUBMITTING WRITTEN STATEMENTS: Individuals or organizations wishing to submit written statements should send fifteen (15) copies to Esther R. Johnson, DFO, Advisory Council on Unemployment Compensation, U.S. Department of Labor, 200 Constitution Avenue, NW., room S–4231, Washington, DC 20210. Statements must be received not later than December 27, 1993.

PRESENTING ORAL STATEMENTS: Individuals or organizations wishing to present oral statements should send a written request to Ellen S. Calhoun, Advisory Council on Unemployment Compensation, U.S. Department of Labor, 200 Constitution Avenue, NW., room S–4206 Washington, DC 20210. Requests for presenting oral statements should indicate a preferred time slot and the request must contain a daytime phone number. All such requests must be received not later than December 27, 1993.

FOR ADDITIONAL INFORMATION CONTACT: Esther R. Johnson, DFO, Advisory Council on Unemployment Compensation, U.S. Department of Labor, 200 Constitution Avenue, NW., room S–4231, Washington, DC 20210. (202) 219–7831.

Signed at Washington, DC, this 6th day of December 1993.

Doug Ross,

Assistant Secretary of Labor.

[FR Doc. 93–30361 Filed 12–10–93; 8:45 am]

BILLING CODE 4510–30–M

[TA–W–28,827]

The Carborundum Company Monofrax Refractories Division Falconer, New York; Negative Determination on Reconsideration

On November 2, 1993, the Department issued an Affirmative Determination Regarding Application for Reconsideration for workers and former workers of the subject firm. The notice was published in the **Federal Register** on November 16, 1993 (58 FR 60464).

The petitioner stated that the Department should have investigated for imports of fused cast refractories instead of refractories.

The company submitted a list of customers for fusion cast refractories, sales of fusion cast refractories in tons for 1992 and 1993 and additional data on employment and worker separations for 1993.

The Department's denial was based on the fact that the decreased employment and the increased import criterion of the Worker Group Eligibility Requirements of the Trade Act were not met. U.S. imports of refractories declined in the June through May, 1992–1993, time period compared to the same time period one year earlier.

Average employment of production workers increased in the period relevant to the petition. Average employment in October, 1993 was at the highest for 1992 and 1993 as Carborundum recalled all its hourly employees previously laid off and hired additional production workers. The findings show that some salaried workers, however, were separated in 1993 because of departmental reorganizations.

A review of the customer list shows that Carborundum has a substantial export market. A loss of export sales would not provide a basis for a worker group certification.

The Department's survey of Carborundum's major domestic customers of fused cast refractories shows that most of the responding customers either did not import or had declining imports of fused cast refractories. Company officials indicated that the reduce demand for fused cast refractories by customers is the result of a weak economy and overcapacity of manufacturing capability in the glass industry. Several customers confirmed Carborundum's view by stating that their purchases are cyclic and follow the economy.

Conclusion

After reconsideration, I affirm the original notice of negative determination of eligibility to apply for adjustment assistance to workers and former workers of the Carborundum Company in Falconer, New York.

Signed at Washington, DC, this 1st day of December 1993.

Stephen A. Wandner,

Deputy Director, Office of Legislation & Actuarial Service, Unemployment Insurance Service.

[FR Doc. 93–30356 Filed 12–10–93; 8:45 am]

BILLING CODE 4510–30–M

NATIONAL FOUNDATION ON THE ARTS AND THE HUMANITIES

Humanities Panel; Meetings

AGENCY: National Endowment for the Humanities.

ACTION: Notice of meetings.

SUMMARY: Pursuant to the provisions of the Federal Advisory Committee Act (Public Law 92–463, as amended), notice is hereby given that the following meetings of the Humanities Panel will be held at the Old Post Office, 1100 Pennsylvania Avenue, NW., Washington, DC 20506.

FOR FURTHER INFORMATION CONTACT: David C. Fisher, Advisory Committee Management Officer, National Endowment for the Humanities, Washington, DC 20506; telephone (202) 606–8322. Hearing-impaired individuals are advised that information on this matter may be obtained by contacting the Endowment's TDD terminal on (202) 606–8282.

SUPPLEMENTARY INFORMATION: The proposed meetings are for the purpose of panel review, discussion, evaluation and recommendation on applications for financial assistance under the National Foundation on the Arts and the Humanities Act of 1965, as amended, including discussion of information given in confidence to the agency grant applicants. Because the proposed meetings will consider information that is likely to disclose: (1) Trade secrets and commercial or financial information obtained from a person and privileged or confidential; or (2) information of a personal nature the disclosure of which would constitute a clearly unwarranted invasion of personal privacy, pursuant to authority granted me by the Chairman's Delegation of Authority to Close Advisory Committee meetings, dated July 19, 1993, I have determined that these meetings will be closed to the public pursuant to subsections (c) (4), and (6) of section 552b of Title 5, United States Code.

1. *Date:* January 12, 1994.
Time: 9 a.m. to 5 p.m.
Room: 315
Program: This meeting will review applications for Reference Materials in Ancient and Medieval Studies, submitted to the Division of Research Programs, for projects beginning after April 1, 1994.

2. *Date:* January 13–14, 1994.
Time: 8:30 a.m. to 5 p.m.
Room: 415.
Program: This meeting will review applications for Humanities Projects in Museums and Historical Organizations Program received for the December 3, 1993 deadline, submitted to the Division of Public Programs, for projects beginning after July 1, 1994.

3. *Date:* January 18, 1994.
Time: 9 a.m. to 5 p.m.
Room: 315.
Program: This meeting will review applications for Reference Materials in American Studies I, submitted to the Division of Research Programs, for projects beginning after July 1, 1994.

4. *Date:* January 19, 1994.
Time: 9 a.m. to 5 p.m.
Room: 315.
Program: This meeting will review applications for projects in Humanities Studies of Science and Technology in Interpretive Research, submitted to the Division of Research Programs, for projects beginning after July 1, 1994.

5. *Date:* January 20–21, 1994.
Time: 8:30 a.m. to 5 p.m.
Room: 415.
Program: This meeting will review applications in Humanities Public Programs, for projects beginning after July 1, 1994.

6. *Date:* January 21, 1994.
Time: 9 a.m. to 5 p.m.
Room: 315.
Program: This meeting will review applications Reference Materials for African, Near Eastern & Asian Studies, submitted to the Division of Research Programs, for projects beginning after July 1, 1994.

7. *Date:* January 24, 1994.
Time: 9 a.m. to 5 p.m.
Room: 315.
Program: This meeting will review Reference Materials applications in American Studies II, submitted to the Division of Research Programs, for projects beginning after July 1, 1994.

8. *Date:* January 25, 1994.
Time: 9 a.m. to 5 p.m.
Room: 315.
Program: This meeting will review applications for projects in Humanities and Medicine in Interpretive Research, submitted to the Division of Research Programs, for projects beginning after July 1, 1994.

9. *Date:* January 27–28, 1994.
Time: 8:30 a.m. to 5 p.m.
Room: 415.
Program: This meeting will review applications for Humanities Projects in Museums and Historical Organizations program received during the December 3, 1993 deadline, submitted to the Division of Public Programs, for projects beginning after July 1, 1994.

10. *Date:* January 27, 1994.
Time: 9 a.m. to 5 p.m.
Room: 315.
Program: This meeting will review applications for projects in Philosophy, Religion, and the Social Sciences in Interpretive Research, submitted to the Division of Research Programs, for projects beginning after July 1, 1994.

11. *Date:* January 28, 1994.
Time: 9 a.m. to 5 p.m.
Room: 315.
Program: This meeting will review applications for Reference Materials in British Studies and General Reference Works, submitted to the Division of Research Programs, for projects beginning after July 1, 1994.

12. *Date:* January 31, 1994.
Time: 9 a.m. to 5 p.m.
Room: 315.
Program: This meeting will review applications in Reference Materials in European Studies, submitted to the Division of Research Programs, for projects beginning after July 1, 1994.

David C. Fisher,
Advisory Committee, Management Officer.

[FR Doc. 93–30284 Filed 12–10–93; 8:45 am]
BILLING CODE 7536–01–M

NUCLEAR REGULATORY COMMISSION

[Docket No. 50–440]

Cleveland Electric Illuminating Co., et al.; Perry Nuclear Power Plant, Unit 1 Environmental Assessment and Finding of No Significant Impact

The U.S. Nuclear Regulatory Commission (the Commission) is considering issuance of an amendment to Facility Operating License No. NPF–58 issued to the Cleveland Electric Illuminating Company, et al. (the licensee), for operation of the Perry Nuclear Power Plant, Unit 1, located in Lake County, Ohio.

Environmental Assessment

Identification of Proposed Action

The proposed amendment would revise the provisions in the Technical Specifications (TS) relating to the setpoints and limits associated with recirculation loop operation to permit plant operation with a single recirculation loop in operation.

The proposed action is in accordance with the licensee's application for amendment dated June 28, 1991.

The Need for the Proposed Action

The proposed change to the TS is required in order to provide the licensee with the capability to operate the reactor using one recirculation loop in the event that the second recirculation loop becomes inoperable.

Environmental Impact of the Proposed Action

The Commission has completed its evaluation of the proposed revision to the TS and concludes that operation of the reactor in single recirculation loop operation will remain within the bounds of the plant design-basis. Further, the proposed changes do not increase the probability or consequences of accidents, no changes are being made in the types of any effluents that may be released offsite, and there is no significant increase in the allowable individual or cumulative occupational radiation exposure. Accordingly, the Commission concludes that this proposed action would result in no significant radiological environmental impact.

With regard to potential nonradiological impacts, the proposed change to the TS involves systems located within the restricted areas as defined in 10 CFR part 20. It does not affect nonradiological plant effluents and has no other environmental impact. Therefore, the Commission concludes that there are no significant nonradiological environmental impacts associated with the proposed amendment.

The Notice of Consideration of Issuance of Amendment and Opportunity for Hearing in connection with this action was published in the **Federal Register** on July 8, 1992 (57 FR 30275). No request for hearing or petition for leave to intervene was filed following this notice.

Alternative to the Proposed Action

Since the Commission concluded that there are no significant environmental effects that would result from the proposed action, any alternatives with equal or greater environmental impacts need not be evaluated.

The principal alternative would be to deny the requested amendment. This would not reduce environmental impacts of plant operation and would result in reduced operational flexibility.

Alternative Use of Resources

This action does not involve the use of resources not previously considered in the Final Environmental Statement related to operation of the Perry Nuclear Power Plant, Units 1 and 2, dated August 1982.

Agencies and Persons Consulted

The NRC staff reviewed the licensee's request and did not consult other agencies or persons.

Finding of No Significant Impact

The Commission has determined not to prepare an environmental impact statement for the proposed license amendment.

Based upon the foregoing environmental assessment, the Commission concludes that the proposed action will not have a significant effect on the quality of the human environment.

For further details with respect to this action, see the licensee's application for amendment dated June 28, 1991, which is available for public inspection at the Commission's Public Document Room, Gelman Building, 2120 L Street, NW., Washington, DC 20555 and at the local public document room at the Perry Public Library, 3753 Main Street, Perry, Ohio 44081.

Dated at Rockville, Maryland, this 7th day of December 1993.

For the Nuclear Regulatory Commission.

John N. Hannon,

Director, Project Directorate III–3, Division of Reactor Project—III/IV/V, Office of Nuclear Reactor Regulation.

[FR Doc. 93–30316 Filed 12–10–93; 8:45 am]

BILLING CODE 7590–01–M

Final Memorandum of Understanding Between the U.S. Nuclear Regulatory Commission and the State of Arkansas

AGENCY: Nuclear Regulatory Commission.

ACTION: Notice.

SUMMARY: This notice is to advise the public of the issuance of a Final Memorandum of Understanding (MOU) between the U.S. Nuclear Regulatory Commission (NRC) and the State of Arkansas. The MOU provides the basis for mutually agreeable procedures whereby the State of Arkansas may utilize the NRC Emergency Response Data System (ERDS) to receive data during an emergency at a commercial nuclear power plant in Arkansas. Public comments were addressed in conjunction with the MOU with the State of Michigan published in the **Federal Register** Vol. 57, No. 28, February 11, 1992.

EFFECTIVE DATE: This MOU is effective November 17, 1993.

ADDRESSES: Copies of all NRC documents are available for public inspection and copying for a fee in the NRC Public Document Room, 2120 L Street, NW. (Lower Level), Washington, DC.

FOR FURTHER INFORMATION CONTACT:

John R. Jolicoeur or Eric Weinstein, Office for Analysis and Evaluation of Operational Data, U.S. Nuclear Regulatory Commission, Washington, DC 20555. Telephone (301) 492–4155 or (301) 492–7836.

This attached MOU is intended to formalize and define the manner in which the NRC will cooperate with the State of Arkansas to provide data related to plant conditions during emergencies at commercial nuclear power plants in Arkansas. Data at Rockville, Maryland, this 3rd day of December, 1993.

For the Nuclear Regulatory Commission.

James M. Taylor,

Executive Director for Operations.

Agreement Pertaining to the Emergency Response Data System Between the State of Arkansas and the U.S. Nuclear Regulatory Commission

I. Authority

The U.S. Nuclear Regulatory Commission (NRC) and the State of Arkansas enter into this Agreement under the authority of section 274i of the Atomic Energy Act of 1954, as amended.

Arkansas recognizes the Federal Government, primarily the NRC, as having the exclusive authority and responsibility to regulate the radiological and national security aspects of the construction and operation of nuclear production or utilization facilities, except for certain authority over air emissions granted to States by the Clean Air Act.

II. Background

A. The Atomic Energy Act of 1954, as amended, and the Energy Reorganization Act of 1974, as amended, authorizes the Nuclear Regulatory Commission (NRC) to license and regulate, among other activities, the manufacture, construction, and operation of utilization facilities (nuclear power plants) in order to assure common defense and security and to protect the public health and safety. Under these statutes, the NRC is the responsible agency regulating nuclear power plant safety.

B. NRC believes that its mission to protect the public health and safety can be served by a policy of cooperation with State governments and has formally adopted a policy statement on "Cooperation with States at Commercial Nuclear Power Plants and Other Nuclear Production or Utilization Facilities" (54 FR 7530, February 22, 1989). The policy statement provides that NRC will consider State proposals to enter into instruments of cooperation for certain programs when these programs have provisions to ensure close cooperation with NRC. This agreement is intended to be consistent with, and implement, the provisions of the NRC's policy statement.

C. NRC fulfills its statutory mandate to regulate nuclear power plant safety by, among other things, responding to emergencies at licensee's facilities and monitoring the status and adequacy of the licensees's responses to emergency situations.

D. Arkansas fulfills its statutory mandate to provide for preparedness,

response, mitigation and recovery in the event of an accident at a nuclear power plant through:

(1) Maintenance of the *State of Arkansas Emergency Operations Plan (EOP)* and the Emergency Response Plans of the various Counties in the planning zones surrounding Arkansas Nuclear One (ANO);

(2) Operation of an ongoing offsite Environmental Surveillance Program in the area surrounding ANO;

(3) Operation of an ongoing program which provides training for state and local emergency workers;

(4) Participation in emergency drills and exercises; and

(5) Responding to actual emergencies.

III. Scope

A. This Agreement defines the way in which NRC and Arkansas will cooperate in planning and maintaining the capability to transfer reactor plant data via the Emergency Response Data System (ERDS) during emergencies at nuclear power plants in the State of Arkansas.

B. It is understood by the NRC and the State of Arkansas that ERDS data will only be transmitted by a licensee during emergencies classified at the Alert level or above, during scheduled tests, or during exercises when available.

C. Nothing in this Agreement is intended to restrict or expand the statutory authority of NRC, the State of Arkansas, or to affect or otherwise alter the terms of any agreement in effect under the authority of section 274b of the Atomic Energy Act of 1954, as amended; nor is anything in this Agreement intended to restrict or expand the authority of the State of Arkansas on matters not within the scope of this Agreement.

D. Nothing in this Agreement confers upon the State of Arkansas authority to:

(1) Interpret or modify NRC regulations and NRC requirements imposed on the licensee;

(2) Take enforcement actions;

(3) Issue confirmatory letters;

(4) Amend, modify, or revoke a license issued by NRC; or

(5) Direct or recommend nuclear power plant employees to take or not to take any action.

Authority for all such actions is reserved exclusively to the NRC.

IV. NRC's General Responsibilities

Under this Agreement, NRC is responsible for maintaining the Emergency Response Data System (ERDS). ERDS is a system designed to receive, store, and retransmit data from in-plant data systems at nuclear power plants during emergencies. The NRC will provide user access to ERDS data to one user terminal for the State of Arkansas during emergencies at nuclear power plants which have implemented and ERDS interface and for which any portion of the plant's 10-mile Emergency Planning Zone (EPZ) lies within the State of Arkansas. The NRC agrees to provide unique software already available to NRC (not commercially available) that was developed under NRC contract for configuring an ERDS workstation.

V. The State of Arkansas' General Responsibilities

A. The State of Arkansas will, in cooperation with the NRC, establish a capability to receive ERDS data. To this end, Arkansas will provide the necessary computer hardware and commercially licensed software required for ERDS data transfer to users.

B. Arkansas agrees not to use ERDS to access data from nuclear power plants for which a portion of the 10 mile Emergency Planning Zone does not fall within its State boundary.

C. For the purpose of minimizing the impact on plant operators, clarification of ERDS data will be pursued through the NRC.

VI. Implementation

Arkansas and the NRC agree to work in concert to assure that the following communications and information exchange protocol regarding the NRC ERDS are followed.

A. Arkansas and the NRC agree in good faith to make available to each other information within the intent and scope of this Agreement.

B. NRC and Arkansas agree to meet as necessary to exchange information on matters of common concern pertinent to this Agreement. Unless otherwise agreed, such meetings will be held in the NRC Operations Center. The affected utilities will be kept informed of pertinent information covered by this Agreement.

C. To preclude the premature public release of sensitive information, NRC and Arkansas will protect sensitive information to the extent permitted by the Federal Freedom of Information Act, the State Freedom of Information Act, 10 CFR 2.790, and other applicable authority.

D. NRC will conduct periodic tests of licensee ERDS data links. A copy of the test schedule will be provided to Arkansas by the NRC. Arkansas may test its ability to access ERDS data during these scheduled tests, or may schedule independent tests of the State link with the NRC.

E. NRC will provide access to ERDS for emergency exercises with reactor units capable of transmitting exercise data to ERDS. For exercises in which the NRC is not participating, Arkansas will coordinate with NRC in advance to ensure ERDS availability. NRC reserves the right to preempt ERDS use for any exercise in progress in the event of an actual event at any licensed nuclear power plant.

VII. Contacts

A. The principal senior management contacts for this Agreement will be the Director, Division of Operational Assessment, Office for Analysis and Evaluation of Operational Data, and the Director, Division of Radiation Control and Emergency Management, Arkansas Department of Health. These individuals may designate appropriate staff representatives for the purpose of administering this Agreement.

B. Identification of these contacts is not intended to restrict communication between NRC and Arkansas' State staff members on technical and other day-to-day activities.

VIII. Resolution Disagreements

A. If disagreements arise about matters within the scope of this Agreement, NRC and Arkansas will work together to resolve these differences.

B. Resolution of differences between the State and NRC staff over issues arising out of this Agreement will be the initial responsibility of the NRC Division of Operational Assessment management.

C. Differences which cannot be resolved in accordance with Sections VIII.A and VIII.B will be reviewed and resolved by the Director, Office for Analysis and Evaluation of Operational Data.

D. The NRC's General Counsel has the final authority to provide legal interpretation of the Commission's regulations.

IX. Effective Date

This Agreement will take effect after it has been signed by both parties.

X. Duration

A formal review, not less than 1 year after the effective date, will be performed by the NRC to evaluate implementation of the Agreement and resolve any problems identified. This Agreement will be subject to periodic reviews and may be amended or modified upon written agreement by both parties, and may be terminated upon 30 days written notice by either party.

XI. Separability

If any provision(s) of this Agreement, or the application of any provision(s) to any person or circumstances is held invalid, the remainder of this Agreement and the application of such provisions to other persons or circumstances will not be affected.

* * * * *

For the U.S. Nuclear Regulatory Commission.

Dated: November 2, 1993.

James M. Taylor,

Executive Director for Operations.

* * * * *

For the State of Arkansas.

Dated: November 17, 1993.

Greta Joy Dicus,

Director, Division of Radiation Control and Emergency Management, Arkansas Department of Health.

[FR Doc. 93–30317 Filed 12–10–93; 8:45 am]

BILLING CODE 7590–01–M

[Docket No. 50–458]

Gulf States Utilities Company and Cajun Electric Power Cooperative, Inc., River Bend Station, Unit 1; Reevaluation of Antitrust Finding

Notice is hereby given that counsel for Cajun Electric Power Cooperative, Inc., the City of Lafayette, Louisiana, Louisiana Energy and Power Authority and Terrebonne Parish Consolidated Government have requested a reevaluation by the Director of the Office of Nuclear Reactor Regulation of the "Finding of No Significant Changes" pursuant to the antitrust review of the captioned nuclear unit. After further review, I have decided not to change my finding.

A copy of my finding, the request for reevaluation, and my reevaluation are available for public examination and copying, for a fee, at the Commission's Public Document Room, 2120 L Street, NW., Washington, DC 20555.

Dated at Rockville, Maryland, this 6th day of December 1993.

For the Nuclear Regulatory Commission.

Thomas E. Murley,

Director, Office of Nuclear Reactor Regulation.

[FR Doc. 93–30318 Filed 12–10–93; 8:45 am]

BILLING CODE 7590–01–M

[Docket No. 50–423]

Northeast Nuclear Energy Co.; Consideration of Issuance of Amendment to Facility Operating License and Opportunity for a Hearing

The U.S. Nuclear Regulatory Commission (the Commission) is considering issuance of an amendment to Facility Operating License No. NPF–49, issued to Northeast Nuclear Energy Company (the licensee), for operation of the Millstone Nuclear Power Station, Unit No. 3 located in New London County, Connecticut.

The proposed amendment would revise the technical specifications to reduce the minimum reactor coolant system flow rate from 387,480 gpm to 371,920 gpm, with corresponding changes in loop flow.

Before issuance of the proposed license amendment, the Commission will have made findings required by the Atomic Energy Act of 1954, as amended (the Act) and the Commission's regulations.

By January 12, 1994, the licensee may file a request for a hearing with respect to issuance of the amendment to the subject facility operating license and any person whose interest may be affected by this proceeding and who wishes to participate as a party in the proceeding must file a written request for a hearing and a petition for leave to intervene. Requests for a hearing and a petition for leave to intervene shall be filed in accordance with the Commission's "Rules of Practice for Domestic Licensing Proceedings" in 10 CFR part 2. Interested persons should consult a current copy of 10 CFR 2.714 which is available at the Commission's Public Document Room, the Gelman Building, 2120 L Street, NW., Washington, DC 20555 and at the local public document room located at the Learning Resources Center, Thames Valley State Technical College, 574 New London Turnpike, Norwich, Connecticut 06360. If a request for a hearing or petition for leave to intervene is filed by the above date, the Commission or an Atomic Safety and Licensing Board, designated by the Commission or by the Chairman of the Atomic Safety and Licensing Board Panel, will rule on the request and/or petition; and the Secretary or the designated Atomic Safety and Licensing Board will issue a notice of hearing or an appropriate order.

As required by 10 CFR 2.714, a petition for leave to intervene shall set forth with particularity the interest of the petitioner in the proceeding, and how that interest may be affected by the results of the proceeding. The petition should specifically explain the reasons why intervention should be permitted with particular reference to the following factors: (1) The nature of the petitioner's right under the Act to be made a party to the proceeding; (2) the nature and extent of the petitioner's property, financial, or other interest in the proceeding; and (3) the possible effect of any order which may be entered in the proceeding on the petitioner's interest. The petition should also identify the specific aspect(s) of the subject matter of the proceeding as to which petitioner wishes to intervene. Any person who has filed a petition for leave to intervene or who has been admitted as a party may amend the petition without requesting leave of the Board up to 15 days prior to the first prehearing conference scheduled in the proceeding, but such an amended petition must satisfy the specificity requirements described above.

Not later than 15 days prior to the first prehearing conference scheduled in the proceeding, a petitioner shall file a supplement to the petition to intervene which must include a list of the contentions which are sought to be litigated in the matter. Each contention must consist of a specific statement of the issue of law or fact to be raised or controverted. In addition, the petitioner shall provide a brief explanation of the bases of the contention and a concise statement of the alleged facts or expert opinion which support the contention and on which the petitioner intends to rely in proving the contention at the hearing. The petitioner must also provide references to those specific sources and documents of which the petitioner is aware and on which the petitioner intends to rely to establish those facts or expert opinion. Petitioner must provide sufficient information to show that a genuine dispute exists with the applicant on a material issue of law or fact. Contentions shall be limited to matters within the scope of the amendment under consideration. The contention must be one which, if proven, would entitle the petitioner to relief. A petitioner who fails to file such a supplement which satisfies these requirements with respect to at least one contention will not be permitted to participate as a party.

Those permitted to intervene become parties to the proceeding, subject to any limitations in the order granting leave to intervene, and have the opportunity to participate fully in the hearing, including the opportunity to present evidence and cross-examine witnesses.

A request for a hearing or a petition for leave to intervene must be filed with the Secretary of the Commission, U.S. Nuclear Regulatory Commission, Washington, DC 20555, Attention: Docketing and Services Branch, or may be delivered to the Commission's Public Document Room, the Gleman Building, 2120 L Street, NW., Washington, DC 20555, by the above date. Where petitions are filed during the last 10

days of the notice period, it is requested that the petitioner promptly so inform the Commission by a toll-free telephone call to Western Union at 1–(800) 248–5100 (in Missouri 1–(800 342–6700). The Western Union operator should be given Datagram Identification Number N1023 and the following message addressed to John F. Stolz: petitioner's name and telephone number; date petition was mailed; plant name; and publication date and page number of this **Federal Register** notice. A copy of the petition should also be sent to the Office of the General Counsel, U.S. Nuclear Regulatory Commission, Washington, DC 20555, and to Gerald Garfield, Esquire, Day, Berry & Howard, City Place, Hartford, Connecticut 06103–3499, attorney for the licensee.

Nontimely filings of petitions for leave to intervene, amended petitions, supplemental petitions and/or requests for hearing will not be entertained absent a determination by the Commission, the presiding officer or the presiding Atomic Safety and Licensing Board that the petition and/or request should be granted based upon a balancing of the factors specified in 10 CFR 2.712(a)(1)(i)–(v) and 2.714(d).

If a request for a hearing is received, the Commission's staff may issue the amendment after it completes its technical review and prior to the completion of any required hearing if it publishes a further notice for public comment of its proposed finding of no significant hazards consideration in accordance with 10 CFR 50.91 and 50.92.

For further details with respect to this action, see the application for amendment dated November 24, 1993, which is available for public inspection at the Commission's Public Document Room, the Gelman Building, 2120 L Street, NW., Washington, DC 20555, and at the local public document room located at the Learning Resources Center, Thames Valley State Technical College, 574 New London Turnpike, Norwich, Connecticut 06360.

Dated at Rockville, Maryland, this 6th day of December 1993.

For the Nuclear Regulatory Commission.

John F. Stolz,

Project Directorate, Division of Reactor Projects—Office of Nuclear Reactor Regulation.

[FR Doc. 93–30319 Filed 12–10–93; 8:45 am]

BILLING CODE 7590–01–M

OFFICE OF MANAGEMENT AND BUDGET

Budget Analysis Branch; Sequestration Update Report

AGENCY: Office of Management and Budget.

ACTION: Notice of transmittal of sequestration update report to the President and Congress.

SUMMARY: Pursuant to section 254(b) of the Balanced Budget and Emergency Deficit Control Act of 1985, as amended, the Office of Management and Budget hereby reports that it has submitted its Sequestration Update Report to the President, the Speaker of the House of Representatives, and the President of the Senate.

FOR FURTHER INFORMATION CONTACT: Anita Chellaraj, Budget Analysis Branch—202/395–3945.

Dated: December 3, 1993

James C. Murr,

Associate Director for Legislative Reference and Administration.

[FR Doc. 93–30104 Filed 12–10–93; 8:45 am]

BILLING CODE 3110–01–M

PEACE CORPS

Information Collection Request Under OMB Review

AGENCY: Peace Corps.

SUMMARY: In compliance with the Paperwork Reduction Act (44 U.S.C. 3502 et seq), this notice announces that the information collection request abstracted below has been forwarded to the Office of Management and Budget for review and is available for public review and comment. A copy of the information collection form may be obtained from Mr. Stephen Abbott, Office of Recruitment, Peace Corps, 1990 K Street, NW., Washington, DC 20526. Mr. Abbott may be reached at 202–606–3780. Comments on this information collection should be addressed to Mr. Jeff Hill, Desk Officer, Office of Management and Budget, Washington, DC 20503.

INFORMATION COLLECTION ABSTRACT:

Title: Request for Information Card.

Need for and use of the information: This card is a way for citizens to let Peace Corps know they wish information on the Agency and its programs.

Respondents: Citizens interested in receiving information about the Peace Corps.

Burden on the public:

a. Annual reporting burden: 1,108 hours.

b. Annual recordkeeping burden: 0 hours.

c. Estimated Average burden per response: 1.75 minutes.

d. Frequency of response: On occasion.

e. Estimated number of likely respondents: 38,000.

Stanley D. Suyat,

Associate Director for Management.

[FR Doc. 93–30293 Filed 12–10–93; 8:45 am]

BILLING CODE 6051–01–M

SECURITIES AND EXCHANGE COMMISSION

[Release No. 34–33285; File No. SR–Amex–93–27]

December 3, 1993.

Self-Regulatory Organizations; Filing and Order Granting Partial Accelerated Approval to a Proposed Rule Change by the American Stock Exchange, Inc., Relating to Increased Position and Exercise Limits on Individual Equity Options and Narrow-Based Index Options

Pursuant to section 19(b)(1) of the Securities Exchange Act of 1934 ("Act"), 15 U.S.C. 78s(b)(1), notice is hereby given that on October 14, 1993, the American Stock Exchange, Inc. ("Amex" or "Exchange") filed with the Securities and Exchange Commission ("Commission" or "SEC") the proposed rule change as described in Items I and II below, which Items have been prepared by the Amex. The Commission is publishing this notice to solicit comments on the proposed rule change from interested persons.

I. Self-Regulatory Organization's Statement of the Terms of Substance of the Proposed Rule Change

The Amex hereby proposes to increase position and exercise limits for individual equity options and narrow-based index options.

The text of the proposed rule change is available at the Office of the Secretary, Amex, and at the Commission.

II. Self-Regulatory Organization's Statement of the Purpose of, and Statutory Basis for, the Proposed Rule Change

In its filing with the Commission, the Amex included statements concerning the purpose of and basis for the proposed rule change and discussed any comments it received on the proposed rule change. The text of these statements may be examined at the places specified in Item IV below. The Amex has

prepared summaries, set forth in sections (A), (B), and (C) below, of the most significant aspects of such statements.

A. Self-Regulatory Organization's Statement of the Purpose of, and the Statutory Basis for, the Proposed Rule Change

(1) *Purpose.*

Individual Equity Options

Currently, Exchange rules provide for position and exercise limits for equity options of 3,000, 5,500, or 8,000 contracts. This three-tiered approach depends upon the volume in the underlying stock, the number of shares outstanding of the underlying stock, or a combination of both. The Exchange proposes to increase such position and exercise limits to 4,500, 7,500, or 10,500 contracts using the current volume and share outstanding criteria.

The Amex believes that the proposed limits of 4,500, 7,500, or 10,500 contracts will increase the depth and liquidity of the markets for individual equity options. Existing position limits are viewed to be overly restrictive by large investors and institutions and have caused such users to trade in the over-the-counter ("OTC") derivatives market in order to meet their liquidity and hedging needs. The exchange also believes that higher position limits will accommodate the hedging needs of its specialists and market makers who are also restricted by current levels in their obligation to maintain fair and orderly markets.[1]

According to the Exchange, these changes are expected to result in little or no attendant risk to the marketplace. A survey conducted by the Philadelphia Stock Exchange, Inc. ("Phlx") on January 6, 1993 with input from the Amex, Chicago Board Options Exchange, Inc. ("CBOE"), New York Stock Exchange, Inc. ("NYSE"), and Pacific Stock Exchange, Inc. ("PSE"), has shown that there has been no reported formal disciplinary actions by any national options exchange which serve to link, as a contributing factor, current position and exercise levels to a charge of manipulation or that insiders established positions near or at current limits in connection with alleged illegal insider activity (see File No. SR–Phlx–93–07). In addition, since the last change in position and exercise limits in 1985, there has been no further increases in position limits, despite an appreciable growth in equity options trading and more sophistication and automated surveillance procedures.

Narrow-Based Stock Index Options

The Amex currently trades options on six narrow-based indexes: (1) the Computer Technology Index ("XCI"); (2) the Oil Index ("XOI"); (3) the Pharmaceutical Index ("DRG") along with options on the reduced value Pharmaceutical Index ("DGL"); (4) the Biotechnology Index ("BTK") along with options on the reduced value Biotechnology Index ("BKL"); (5) the North American Telecommunications Index ("XTC"); and (6) the Retail Index ("RTL"). The existing three-tiered system for narrow-based index options is based on the degree of concentration of a component stock in the index. The three levels of position and exercise limits are currently 4,000, 6,000, and 8,000 contract. For the same reasons enumerated above respecting individual equity options, the Exchange proposes to increase these limits to 5,500, 7,500, and 10,500 contracts. In addition, position and exercise limits for reduced narrow-based indexes will remain at ten-times the position limits of the full-valued indexes and aggregation of position between full-valued and reduced-value narrow-based indexes will continue.

(2) *Basis.* The Exchange believes that the proposed rule change is consistent with Section 6(b) of the Act, in general, and Section 6(b)(5), in particular, in that it is designed to promote just and equitable principles of trade, remove impediments to and perfect the mechanism of a free and open market and a national market system.

B. Self-Regulatory Organization's Statement on Burden on Competition

The Amex believes that the proposed rule change will impose no burden on competition.

C. Self-Regulatory Organization's Statement on Comments on the Proposed Rule Change Received From Members, Participants or Others

No written comments were either solicited or received with respect to the proposed rule change.

III. Date of Effectiveness of the Proposed Rule Change and Timing for Commission Action

The Exchange has requested that the proposed rule changes be given accelerated effectiveness pursuant to Section 19(b)(2) of the Act.

The Commission finds that the proposed rule changes are consistent with the requirements of the Act and the rules and regulations thereunder applicable to a national securities exchange, and, in particular, the requirements of Section 6(b)(5).[2] Specifically, the Commission concludes that the proposed position and exercise limits of 4,500 contracts, 7,500 contracts, and 10,500 contracts for equity options, and 5,500 contracts, 7,500 contracts, and 10,500 contracts for narrow-based index options, will further increase the potential depth and liquidity of the options market as well as the underlying cash market without significantly increasing concerns regarding intermarket manipulations or disruptions of the market for the options or underlying securities.

Since the inception of standardized options trading, the options exchanges have had rules imposing limits on the aggregate number of options contracts that a member or customer could hold or exercise. These rules are intended to prevent the establishment of large options positions that can be used or might create incentives to manipulate or disrupt the underlying market so as to benefit the options position. In particular, position and exercise limits are designed to minimize the potential for mini-manipulations[3] and for corners or squeezes of the underlying market. They also impose a ceiling on the maximum position an investor with inside corporate or market information can establish through the use of options. In addition, they serve to reduce the possibility for disruption of the options market itself, especially in illiquid options classes.

In establishing position and exercise limits, the Commission has been careful to balance two competing concerns. First, the Commission has recognized that the limits must be sufficient to prevent investors from disrupting the market for the underlying security by acquiring and exercising a number of options contracts disproportionate to the deliverable supply and average trading volume of the underlying security. At the same time, the Commission has realized the limits must not be established at levels that are so low as to discourage participation in the options market by institutions and other investors with substantial hedging needs or to prevent specialists and market makers from adequately meeting

[1] As a result of hedge exemptions available for individual equity options, the proposed position limits for individual equity options would provide a maximum limit level (depending on the availability of the hedge exemption) of 9,000, 15,000, and 21,000 contracts, or twice the proposed position limits consistent with Commentary .09 to Amex Rule 904.

[2] 15 U.S.C. 78f(b)(5) (1982).

[3] Mini-manipulation is an attempt to influence, over a relatively small range, the price movement in a stock to benefit a previously established derivatives position.

their obligations to maintain a fair and orderly market.[4]

In October 1980, the Commission approved proposed rule changes by the options exchanges to increase position and exercise limits from 1,000 to 2,000 contracts for all individual equity options classes.[5] In conjunction with the approval, the Commission received commitments from the options exchanges to study the effects of the increased limits. The Commission indicated that the experience gained under the increased limits, if coupled with adequate monitoring and surveillance procedures, could serve as a basis for considering further position and exercise limit modifications.

In July 1983, the Commission approved a further increase in position and exercise limits for individual stock options based on a tiering approach.[6] Limits for options on stocks with the greatest trading volume and public float were increased to 4,000 contracts and limits on all other options classes were increased to 2,500 contracts.[7] In approving the increased limits under a two-tiered approach, the Commission recognized that securities with active and deep trading markets, as well as broad public ownership, were more difficult to manipulate or disrupt than securities having less active and deep markets and having smaller public floats.[8] Accordingly, the Commission believed that the tiering approach to position and exercise limits was appropriate because it would increase the depth and liquidity of the stock options markets without significantly increasing concerns regarding manipulation and disruption of the market for the underlying securities.[9] In addition, the Commission noted that tiering was consistent with the gradual, evolutionary approach that the Commission and the exchanges have adopted in increasing position and exercise limits.

The Commission in 1983 approved the Amex's existing position and exercise limit framework for narrow-based index options.[10] The Amex's narrow-based index options position limit requirements are identical to the rules imposed by the other options exchanges and provide for a three-tiered approach.[11] Specifically, position limits for narrow-based stock index options are either 4,000, 6,000, or 8,000 contracts, depending on the concentration of the stocks in the index.[12]

Lastly, the Commission approved the Amex's existing position and exercise limit framework for individual equity options in March 1985. This approval extended the tiering approach commenced by the options exchanges in 1983.[13] The Commission in its 1985 Release reiterated its prior findings maintaining that liberalizing position and exercise limits will further increase the potential depth and liquidity of the individual stock options market without significantly increasing concerns regarding intermarket manipulations or disruptions of the market for the options or underlying securities.[14]

The other options exchanges are also proposing a similar structure that would establish position and exercise limits for individual equity options of either 4,500, 7,500 or 10,500 contracts depending on certain criteria related to the trading volume of the underlying stock or a combination of both the trading volume and the number of shares outstanding of the underlying stock, as well as narrow-based stock index option position limits of 5,500, 7,500, and 10,500 depending on the concentration of the stocks included in the index.[15]

The Commission previously has noted that the markets for securities with active and deep trading markets, as well as broad public ownership, are more difficult to manipulate or disrupt than those securities that are less active with smaller public floats. The proposed increases recognize this by seeking to minimize the restraints on those options classes that can accommodate larger limits without significantly increasing manipulation concerns. In particular, the proposed limit of 10,500 contracts for options on the most actively traded, widely held securities, permits the Commission to avoid placing unnecessary restraints on those options where the manipulative potential is the least and the need for increased positions, both by traders and institutional investors, likely would be the greatest.[16]

Under the proposal, the current lowest tier of 3,000 contracts for individual equity options would be increased 50% to 4,500. An increase of 1,500 contracts or 50% for the lowest tier, 2,000 contracts or 36% for the middle tier, and 2,500 contracts or 31% for the highest tier, appears to be appropriate and consistent with the Commission's evolutionary approach to position and exercise limits.[17]

---

[4] See H.R. Rep. No. IFC–3, 96th Cong., 1st Sess. at 189–91 (Comm. Print 1978) ("Options Study").

[5] See Securities Exchange Act Release No. 17237 (October 22, 1980), 45 FR 71453, October 28, 1980 ("1980 Release").

[6] See Securities Exchange Act Release No. 19975 (July 15, 1983), 48 FR 33389 ("1983 Release").

[7] To be eligible for the 4,000 contract limit an underlying security must have had either (i) trading volume of at least 20,000,000 shares during the most recent six month trading period; or (ii) trading volume of at least 15,000,000 shares during the most recent six month trading period and at least 60,000,000 shares currently outstanding. All other options not meeting these requirements were subject to the 2,500 contract limits.

[8] While options are traded on some stocks with a public float of several hundred million shares, options exchange rules authorize options to be traded on stocks with as few as seven million shares outstanding. Similarly, while some options stocks have average daily trading volume of up to a million or more shares, exchange rules authorize options trading on stocks with annual trading volume as low as 2.4 million shares. Specifically, the quantitative listing and maintenance standards require: (1) A minimum of 7 and 6.3 million shares outstanding, respectively, which are owned by persons other than "insiders" as defined in Section 16 of the Act; (2) a minimum of 2,000 and 1,600 shareholders, respectively; (3) trading volume of at least 2.4 and 1.8 million shares, respectively, during the past 12 months; (4) for an original listing, the market price per share of the underlying security must have closed at or above $7.50 during the majority of business days over the preceding three months; and (5) to maintain its listing, the market price per share of the underlying security must have closed at or above $5 during the majority of business days over the preceding six months. See Amex Rule 915.

[9] In approving the higher two-tiered limits, the Commission also noted that the absence of discernible manipulation problems under the current limits were an indication that modest additional increases were justified.

[10] See Securities Exchange Act Release No. 20075 (August 12, 1983), 48 FR 37556.

[11] See Securities Exchange Act Release Nos. 20125 (August 26, 1983), 48 FR 40046; 20663 (February 17, 1984), 49 FR 7171; and 20437 (December 2, 1983), FR 55229; and 21032 (June 8, 1984), 49 FR 24964.

[12] See Amex Rule 904C.

[13] Specifically, the existing requirements approved by the Commission in the 1985 Release provide for: (1) A 8,000 contract limit for options on an underlying stock that has either (a) trading volume of at least 40 million shares during the most recent six month trading period, or (b) trading volume of at least 30 million shares during the most recent six month trading period and at least 120 million shares currently outstanding; (2) a 5,500 contract limit for options on an underlying stock that has either (a) trading volume of at least 20 million shares during the most recent six month trading period; or (b) trading volume of at least 15 million shares during the most recent six month trading period and at least 40 million shares currently outstanding; and (3) a 3,000 contract limit for all other options classes. See Securities Exchange Act Release No. 21907 (April 4, 1985), 50 FR 13440 ("1985 Release").

[14] See 1983 Release *supra* note 6 and 1985 Release *supra* note 13.

[15] See Securities Exchange Act Release Nos. 32310 (May 14, 1993), 58 FR 29675 (PSE) and 32309 (May 14, 1993), 58 FR 29653 (Phlx) and File Nos. SR–CBOE–93–43 and SR–NYSE–93–41.

[16] Options that would be eligible for the highest tier limit of 10,500 contracts currently have a 8,000 contract limit. Although a 2,500 contract limit increase (31%) for some options may appear to be substantial, the Commission believes that the qualifying criteria for the highest tier ensure that only options on the most actively traded and heavily capitalized securities will be eligible for the 10,500 contract limit.

[17] In the case of narrow-based stock index options, position and exercise limits will be

Continued

Finally, the absence of discernible manipulative problems under the current three-tiered limit system for individual equity and narrow-based index options leads the Commission to conclude that the increases being proposed by the Exchange are warranted.[18] The Commission recognizes that there are no ideal limits in the sense that options positions of any given size can be stated conclusively to be free of any manipulative concerns. The Amex and the Commission, however, have relied largely on the absence of discernible manipulation or disrupting problems under current limits as an indicator that additional increases can be safely considered. The Commission believes for these reasons that the liberalization of existing position and exercise limits is now appropriate.[19]

The Commission notes that the Exchange has had considerable experience monitoring the current three-tiered framework in individual equity options and narrow-based stock index options.[20]

The Commission has not found that differing position and exercise limit requirements based on the particular options product to have created programming or monitoring problems for securities firms, or to have led to significant customer confusion. Based on the current experience in handling position and exercise limits, the Commission believes that the increase in position and exercise limits for individual equity and narrow-based stock index will not cause significant problems.

Since the 1985 Release, the options exchanges, including the Amex, have been consistently updating and automating their surveillance systems. The Commission believes that the Exchange's surveillance programs will be adequate to detect and deter the use of illegal position limits by market participants as well as detect and deter attempted manipulative activity and other trading abuses.

The Commission finds good cause for approving the proposed rule change prior to the thirteeth day after the date of publication of notice thereof in the **Federal Register** because accelerating approval will permit the position and exercise limit framework for individual equity options and narrow-based stock index options across options exchanges to remain uniform.

IV. Solicitation of Comments

Interested persons are invited to submit written data, views and arguments concerning the foregoing. Persons making written submissions should file six copies thereof with the Secretary, Securities and Exchange Commission, 450 Fifth Street, NW., Washington, DC 20549. Copies of the submission, all subsequent amendments, all written statements with respect to the proposed rule change that are filed with the Commission, and all written communications relating to the proposed rule change between the Commission and any person, other than those that may be withheld from the public in accordance with the provisions of 5 U.S.C. 552, will be available for inspection and copying in the Commission's Public Reference Section, 450 Fifth Street NW., Washington, DC 20549. Copies of such filing will also be available for inspection and copying at the principal office of the Amex. All submissions should refer to File Number SR–Amex–93–27 and should be submitted by January 3, 1994.

V. Conclusion

For the foregoing reasons, the Commission finds that the amended proposed rule change of the Amex to increase position and exercise limits for individual equity options to 4,500, 7,500, or 10,500 contracts (depending on certain market related criteria) and narrow-based stock index options to either 5,500, 7,500, or 10,500 contracts (depending on the percentage stock concentration within the index) is consistent with the requirements of the Act and the rules and regulations thereunder applicable to a national securities exchange, and in particular, the requirements of Section 6,[21] and the rules thereunder.

It is therefore ordered, pursuant to section 19(b)(2) of the Act,[22] that the proposed rule change (SR–Amex–93–27) relating to an increase in position and exercise limits is approved.

For the Commission, by the Division of Market Regulation, pursuant to delegated authority.[23]

Margaret H. McFarland,

Deputy Secretary.

[FR Doc. 93–30339 Filed 12–10–93; 8:45 am]

BILLING CODE 8010–01–M

increased by 38%, 25%, and 19% for the lowest to highest limit tiers, respectively.

[18] The Commission believes that the proposed limits for narrow-based index options, when viewed in conjunction with margin requirements, address concerns with respect to the potential use of narrow-based index options to circumvent limits applicable to positions held in options on individual stocks. Currently, margin requirements for both individual equity and narrow-based index options are 100% of the option premium plus 20% of the underlying product value, less any out-of-the-money amount, with a minimum premium plus 10% of the underlying product value. In addition, positions in narrow-based index options are not required to be aggregated with positions in options on the individual stocks comprising the indexes.

[19] The Commission continues to believe that proposals to increase position limits and exercise limits must be justified and evaluated separately. After reviewing the proposed exercise limits, along with the eligibility criteria for each tier, the Commission has concluded that the exercise limit increases for the three-tiered framework, do not raise manipulation problems or increase concerns over market disruption in the underlying securities.

[20] Currently, for example, position and exercise limits for individual equity options are limited to positions of 8,000, 5,500, and 3,000 contracts, while narrow-based index option position limits have a similar three-tiered structure of 8,000, 6,000, and 4,000 contracts, depending on the concentration of a component stock in the index.

[21] 15 U.S.C. 78f (1982).

[22] 15 U.S.C. 78s(b)(2) (1982).

[23] 17 CFR § 200.30–3(a)(12) (1993).

[Release No. 34–33283; File No. SR–CBOE–93–43]

December 3, 1993.

Self-Regulatory Organizations; Filing and Order Granting Accelerated Approval to a Proposed Rule Change by the Chicago Board Options Exchange, Inc., Relating to Increased Position and Exercise Limits on Individual Equity Options and Narrow-Based Index Options

Pursuant to section 19(b)(1) of the Securities Exchange Act of 1934 ("Act"), 15 U.S.C. 78s(b)(1), notice is hereby given that on September 27, 1993, the Chicago Board Options Exchange, Inc. ("CBOE" or "Exchange") filed with the Securities and Exchange Commission ("Commission" or "SEC") the proposed rule change as described in Items I and II below, which Items have been prepared by the CBOE. The Commission is publishing this notice to solicit comments on the proposed rule change from interested persons.

I. Self-Regulatory Organization's Statement of the Terms of Substance of the Proposed Rule Change

The CBOE proposes to amend certain of its position and exercise limit rules to conform to certain of the increased limits proposed by other options exchanges, which proposals are pending with the Commission.[1]

The text of the proposed rule change is available at the Office of the Secretary, CBOE, and at the Commission.

[1] See Securities Exchange Act Release Nos. 32310 (May 14, 1993), 58 FR 29675 and 32309 (May 14, 1993), 58 FR 29653; File Nos. SR–Amex–93–27 and SR–NYSE–93–41.

II. Self-Regulatory Organization's Statement of the Purpose of, and Statutory Basis for, the Proposed Rule Change

In its filing with the Commission, the CBOE included statements concerning the purpose of and basis for the proposed rule change and discussed any comments it received on the proposed rule change. The text of these statements may be examined at the places specified in Item IV below. The Amex has prepared summaries, set forth in sections (A), (B), and (C) below, of the most significant aspects of such statements.

A. Self-Regulatory Organization's Statement of the Purpose of, and the Statutory Basis for, the Proposed Rule Change

The purpose of the proposed rule change is to increase the position and exercise limits under CBOE Rule 4.11 (equity options)[2] and under CBOE Rule 24.4A (industry index options) to the same levels and at the same time as corresponding limits are increased pursuant to proposed rule changes filed by the Philadelphia Stock Exchange, Inc. ("Phlx") and the Pacific Stock Exchange, Inc. ("PSE").[3] It is anticipated that the pending Phlx and PSE rule changes, as well as matching rule changes to be filed by other options exchanges, will be approved by the Commission in the near future. Accelerated approval, as requested by the Exchange, will enable the Commission to approve all rule changes regarding these position limits in a uniform and timely manner.

The CBOE requests approval of this proposed rule change concurrent with the approval of the other options exchanges' rule changes. Concurrent approvals will enable the CBOE to increase its position limits at the same time as the competing exchanges' limits are increased, thereby promoting fair competition. Concurrent approval also will eliminate the risk of investor confusion that could exist in a multiple options exchange trading environment concerning the position limits applicable to equity options and industry index options. Currently, Exchange rules provide for position and exercise limits for individual equity options of 3,000, 5,500, or 8,000 contracts. This three-tiered approach depends upon the volume in the underlying stock, the number of shares outstanding of the underlying stock, or a combination of both. The Exchange proposes to increase such position and exercise limits to 4,500, 7,500, or 10,500 contracts using the current volume and share outstanding criteria.

The CBOE believes that the proposed limits of 4,500, 7,500, or 10,500 contracts will increase the depth and liquidity of the markets for individual equity options. Existing position limits are viewed to be overly restrictive by large investors and institutions and have caused such users to trade in the over-the-counter ("OTC") derivatives market in order to meet their liquidity and hedging needs. The Exchange also believes that higher position limits will accommodate the hedging needs of its market markers who are also restricted by current levels.

These changes are expected to result in little or no attendant risk to the marketplace. A survey conducted by the Philadelphia Stock Exchange, Inc. ("Phlx") on January 6, 1993 with input from the American Stock Exchange, Inc. ("Amex"), CBOE, New York Stock Exchange, Inc. ("NYSE"), and Pacific Stock Exchange, Inc. ("PSE") has shown that there has been no reported formal disciplinary actions by any national options exchanges which serve to link, as a contributing factor, current position and exercise levels to a charge of manipulation or that insiders established positions near or at current limits in connection with alleged illegal insider activity (See SR–Phlx–93–07). In addition, since the last change in position and exercise limits in 1985, there has been no further increases in position limits, despite an appreciable growth in equity options trading and more sophistication and automated surveillance procedures.

The CBOE currently trades options on 9 full value and reduced value narrow-based indexes: (1) Environmental Index; (2) Computer Software Index; (3) Standard & Poor's ("S&P") Chemical Index; (4) S&P Transportation Index; (5) S&P Health Care Index; (6) S&P Retail Index; (7) S&P Banking Index; (8) S&P Insurance Index; and (9) Biotechnology Index. The existing three-tiered system for narrowbased index options is based on the degree of concentration of a component stock in the index. The three levels of position and exercise limits are currently 4,000, 6,000, and 8,000 contract. For the same reasons enumerated above respecting individual equity options, the Exchange proposes to increase these limits to 5,500, 7,500, and 10,500 contracts. In addition, position and exercise limits for reduced narrow-based indexes will remain at ten-times the position limits of the full-valued indexes and aggregation of position between full-valued and reduced-value narrow-based indexes will continue.

The Exchange believes that the proposed rule change is consistent with section 6(b) of the Act, in general, and section 6(b)(5), in particular, in that it is designed to promote just and equitable principles of trade, remove impediments to and perfect the mechanism of a free and open market and a national market system.

B. Self-Regulatory Organization's Statement on Burden on Competition

The CBOE does not believe that the proposed rule change will impose any burden on Competition.

C. Self-Regulatory Organization's Statement on Comments on the Proposed Rule Change Received From Members, Participants or Others

No written comments were either solicited or received with respect to the proposed rule change.

III. Date of Effectiveness of the Proposed Rule Change and Timing for Commission Action

The Exchange has requested that the proposed rule changes be given accelerated effectiveness pursuant to section 19(b)(2) of the Act.

The Commission finds that the proposed rule changes are consistent with the requirements of the Act and the rules and regulations thereunder applicable to a national securities exchange, and, in particular, the requirements of section 6(b)(5).[4] Specifically, the Commission concludes that the proposed position and exercise limits of 4,500 contracts, 7,500 contracts, and 10,500 contracts for equity options, and 5,500 contracts, 7,500 contracts, and 10,500 contracts for narrow-based index options, will further increase the potential depth and liquidity of the options market as well as the underlying cash market without significantly increasing concerns regarding intermarket manipulations or disruptions of the market for the options or underlying securities.

Since the inception of standardized options trading, the options exchanges have had rules imposing limits on the aggregate number of options contracts that a member or customer could hold or exercise. These rules are intended to prevent the establishment of large

[2] The Exchange's individual equity options exercise limits will conform to the proposed increases in positions limits as set forth in CBOE Rule 4.12. See letter from Michael L. Meyer, Schiff Hardin & Waite, to Jeffrey Burns, Attorney, Branch of Derivatives Regulation, Division of Market Regulation, SEC, dated November 24, 1993.

[3] See Securities Exchange Act Release Nos. 32310 (May 14, 1993), 58 FR 29675 (PSE) and 32309 (May 14, 1993), 58 FR 29653 (Phlx).

[4] 15 U.S.C. 78f(b)(5) (1982).

options positions that can be used or might create incentives to manipulate or disrupt the underlying market so as to benefit the options position. In particular, position and exercise limits are designed to minimize the potential for mini-manipulations[5] and for corners or squeezes of the underlying market. They also impose a ceiling on the maximum position an investor with inside corporate or market information can establish through the use of options. In addition, they serve to reduce the possibility for disruption of the options market itself, especially in illiquid options classes.

In establishing position and exercise limits, the Commission has been careful to balance two competing concerns. First, the Commission has recognized that the limits must be sufficient to prevent investors from disrupting the market for the underlying security by acquiring and exercising a number of options contracts disproportionate to the deliverable supply and average trading volume of the underlying security. At the same time, the Commission has realized that limits must not be established at levels that are so low as to discourage participation in the options market by institutions and other investors with substantial hedging needs or to prevent specialists and market makers from adequately meeting their obligations to maintain a fair and orderly market.[6]

In October 1980, the Commission approved proposed rule changes by the options exchanges to increase position and exercise limits from 1,000 to 2,000 contracts for all individual equity options classes.[7] In conjunction with the approval, the Commission received commitments from the options exchanges to study the effects of the increased limits. The Commission indicated that the experience gained under the increased limits, if coupled with adequate monitoring and surveillance procedures, could serve as a basis for considering further position and exercise limit modifications.

In July 1983, the Commission approved a further increase in position and exercise limits for individual stock options based on a tiering approach.[8] Limits for options on stocks with the greatest trading volume and public float were increased to 4,000 contracts and limits on all other options classes were increased to 2,500 contracts.[9] In approving the increased limits under a two-tiered approach, the Commission recognized that securities with active and deep trading markets, as well as broad public ownership, were more difficult to manipulate or disrupt than securities having less active and deep markets and having smaller public floats.[10]

Accordingly, the Commission believed that the tiering approach to position and exercise limits was appropriate because it would increase the depth and liquidity of the stock options markets without significantly increasing concerns regarding manipulation and disruption of the market for the underlying securities.[11] In addition, the Commission noted that tiering was consistent with the gradual, evolutionary approach that the Commission and the exchanges have adopted in increasing position and exercise limits.

The Commission in 1983 approved the CBOE's existing position and exercise limit framework for narrow-based index options.[12] The CBOE's narrow-based index options position limit requirements are identical to the rules imposed by the other options exchanges and provide for a three-tiered approach.[13] Specifically, position limits for narrow-based stock index options are either 4,000, 6,000, or 8,000 contracts, depending on the concentration of the stocks in the index.[14]

Lastly, the Commission approved the CBOE's existing position and exercise limit framework for individual equity options in March 1985. This approval extended the tiering approach commenced by the options exchanges in 1983.[15] The Commission in its 1985 Release reiterated its prior findings maintaining that liberalizing position and exercise limits will further increase the potential depth and liquidity of the individual stock options market without significantly increasing concerns regarding intermarket manipulations or disruptions of the market for the options or underlying securities.[16]

The other options exchanges are also proposing a similar structure that would establish position and exercise limits for individual equity options of either 4,500, 7,500 or 10,500 contracts depending on certain criteria related to the trading volume of the underlying stock or a combination of both the trading volume and the number of shares outstanding of the underlying stock, as well as narrow-based stock index option position limits of 5,500, 7,500, and 10,500 depending on the concentration of the stocks included in the index.[17]

The Commission previously has noted that the markets for securities with active and deep trading markets, as well as broad public ownership, are more difficult to manipulate or disrupt than those securities that are less active with

[5] Mini-manipulation is an attempt to influence, over a relatively small range, the price movement in a stock to benefit a previously established derivatives position.

[6] See H.R. Rep. No. IFC–3, 96th Cong., 1st Sess at 189–91 (Comm. Print 1978) ("Options Study").

[7] See Securities Exchange Act Release No. 17237 (October 22, 1980), 45 FR 71453, October 28, 1980 ("1980 Release").

[8] See Securities Exchange Act Release No. 19975 (July 15, 1983), 48 FR 33389 ("1983 Release").

[9] To be eligible for the 4,000 contract limit an underlying security must have had either (i) trading volume of at least 20,000,000 shares during the most recent six month trading period; or (ii) trading volume of at least 15,000,000 shares during the most recent six month trading period and at least 60,000,000 shares currently outstanding. All other options not meeting these requirements were subject to the 2,500 contract limits.

[10] While options are traded on some stocks with a public float of several hundred million shares, options exchange rules authorize options to be traded on stocks with as few as seven million shares outstanding. Similarly, while some options stocks have average daily trading volume of up to a million or more shares, exchange rules authorize options trading on stocks with annual trading volume as low as 2.4 million shares. Specifically, the quantitative listing and maintenance standards require: (1) A minimum of 7 and 6.3 million shares outstanding, respectively, which are owned by persons other than "insiders" as defined in Section 16 of the Act; (2) a minimum of 2,000 and 1,600 shareholders, respectively; (3) trading volume of at least 2.4 and 1.8 million shares, respectively, during the past 12 months; (4) for an original listing, the market price per share of the underlying security might have closed at or above $7.50 during the majority of business days over the preceding three months; and (5) to maintain its listing, the market price per share of the underlying security must have closed at or above $5 during the majority of business days over the preceding six months. *See* CBOE Rule 5.4, Interpretation .01.

[11] In approving the higher two-tiered limits, the Commission also noted that the absence of discernible manipulation problems under the current limits were an indication that modest additional increases were justified.

[12] See Securities Exchange Act Release No. 20125 (August 26, 1983), 48 FR 40046.

[13] See Securities Exchange Act Release Nos. 20075 (August 12, 1983), 48 FR 37556; 20663 (February 17, 1984), 49 FR 7171; and 20437 (December 2, 1983), 48 FR 55229; and 21032 (June 8, 1984), 49 FR 24964.

[14] See CBOE Rule 24.4A.

[15] Specifically, the existing requirements approved by the Commission in the 1985 Release provide for: (1) A 8,000 contract limit for options on an underlying stock that has either (a) trading volume of at least 40 million shares during the most recent six month trading period, or (b) trading volume of at least 30 million shares during the most recent six month trading period and at least 120 million shares currently outstanding; (2) a 5,500 contract limit for options on an underlying stock that has either (a) trading volume of at least 20 million shares during the most recent six month trading period; or (b) trading volume of at least 15 million shares during the most recent six month trading period and at least 40 million shares currently outstanding; and (3) a 3,000 contract limit for all other options classes. *See* Securities Exchange Act Release No. 21907 (April 4, 1985), 50 FR 13440 ("1985 Release").

[16] See 1983 Release *supra* note 8 and 1985 Release *supra* note 15.

[17] See *supra* note 1.

smaller public floats. The proposed increases recognize this by seeking to minimize the restraints on those options classes that can accommodate larger limits without significantly increasing manipulation concerns. In particular, the proposed limit of 10,500 contracts for options on the most actively traded, widely held securities, permits the Commission to avoid placing unnecessary restraints on those options where the manipulative potential is the least and the need for increased positions, both by traders and institutional investors, likely would be the greatest.[18]

Under the proposal, the current lowest tier of 3,000 contracts for individual equity options would be increased 50% to 4,500. An increase of 1,500 contracts or 50% for the lowest tier, 2,000 contracts or 36% for the middle tier, and 2,500 contracts or 31% for the highest tier, appears to be appropriate and consistent with the Commission's evolutionary approach to position and exercise limits.[19]

Finally, the absence of discernible manipulative problems under the current three-tiered limit system for individual equity and narrow-based index options leads the Commission to conclude that the increases being proposed by the Exchange are warranted.[20] The Commission recognizes that there are no ideal limits in the sense that options positions of any given size can be stated conclusively to be free of any manipulative concerns. The CBOE and the Commission, however, have relied largely on the absence of discernible manipulation or disruption problems under current limits as an indicator that additional increases can be safely considered. The Commission believes for these reasons that the liberalization of existing position and exercise limits is now appropriate.[21]

The Commission notes that the Exchange has had considerable experience monitoring the current three-tiered framework in individual equity options and narrow-based stock index options.[22] The Commission has not found that differing position and exercise limit requirements based on the particular options product to have created programming or monitoring problems for securities firms, or to have led to significant customer confusion. Based on the current experience in handling position and exercise limits, the Commission believes that the increase in position and exercise limits for individual equity and narrow-based stock index will not cause significant problems.

Since the 1985 Release, the options exchanges, including the CBOE, have been consistently updating and automating their surveillance systems. The Commission believes that the Exchange's surveillance programs will be adequate to detect and deter the use of illegal position limits by market participants as well as detect and deter attempted manipulative activity and other trading abuses.

The Commission finds good cause for approving the proposed rule change prior to the thirtieth day after the date of publication of notice thereof in the **Federal Register** because accelerating approval will permit the position and exercise limit framework for individual equity options and narrow-based stock index options across options exchanges to remain uniform.

IV. Solicitation of Comments

Interested persons are invited to submit written data, views and arguments concerning the foregoing. Persons making written submissions should file six copies thereof with the Secretary, Securities and Exchange Commission, 450 Fifth Street NW., Washington, DC 20549. Copies of the submission, all subsequent amendments, all written statements with respect to the proposed rule change that are filed with the Commission, and all written communications relating to the proposed rule change between the Commission and any person, other than those that may be withheld from the public in accordance with the provisions of 5 U.S.C. 552, will be available for inspection and copying in the Commission's Public Reference Section, 450 Fifth Street NW., Washington DC 20549. Copies of such filing will also be available for inspection and copying at the principal office of the CBOE. All submissions should refer to File Number SR–CBOE–93–43 and should be submitted by January 3, 1994.

V. Conclusion

For the foregoing reasons, the Commission finds that the amended proposed rule change of the CBOE to increase position and exercise limits for individual equity options to 4,500, 7,500, or 10,500 contracts (depending on certain market related criteria) and narrow-based stock index options to either 5,500, 7,500, or 10,500 contracts (depending on the percentage stock concentration within the index) is consistent with the requirements of the Act and the rules and regulations thereunder applicable to a national securities exchange, and in particular, the requirements of Section 6,[23] and the rules thereunder.

It is therefore ordered, pursuant to section 19(b)(2) of the Act,[24] that the proposed rule change (SR–CBOE–93–43) relating to an increase in position and exercise limits is approved.

For the Commission, by the Division of Market Regulation, pursuant to delegated authority.[25]

Margaret H. McFarland,

Deputy Secretary.

[FR Doc. 93–30340 Filed 12–10–93; 8:45 am]

BILLING CODE 8010–01–M

[18] Options that would be eligible for the highest tier limit of 10,500 contracts currently have a 8,000 contract limit. Although a 2,500 contract limit increase (31%) for some options may appear to be substantial, the Commission believes that the qualifying criteria for the highest tier ensure that only options on the most actively traded and heavily capitalized securities will be eligible for the 10,500 contract limit.

[19] In the case of narrow-based stock index options, position and exercise limits will be increased by 38%, 25%, and 19% for the lowest to highest limit tiers, respectively.

[20] The Commission believes that the proposed limits for narrow-based index options, when viewed in conjunction with margin requirements, address concerns with respect to the potential use of narrow-based index options to circumvent limits applicable to positions held in options on individual stocks. Currently, margin requirements for both individual equity and narrow-based index options are 100% of the option premium plus 20% of the underlying product value, less any out-of-the-money amount, with a minimum premium plus 10% of the underlying product value. In addition, positions in narrow-based index options are not required to be aggregated with positions in options on the individual stock comprising the indexes.

[21] The Commission continues to believe that proposals to increase position limits and exercise limits must be justified and evaluated separately. After reviewing the proposed exercise limits, along with the eligibility criteria for each tier, the Commission has concluded that the exercise limit increase for the three-tiered framework, do not raise manipulation problems or increase concerns over market disruption in the underlying securities.

[22] Currently, for example, position and exercise limits for individual equity options are limited to positions of 8,000, 5,500, and 3,000 contracts, while narrow-based index option position limits have a similar three-tiered structure of 8,000, 6,000, and 4,000 contracts, depending on the concentration of a component stock in the index.

[23] 15 U.S.C. 78f (1982).

[24] 15 U.S.C. 78s(b)(2) (1982).

[25] 17 CFR 200.30–3(a)(12) (1993).

[Release No. 34–33291; File No. SR–CBOE–93–48]

Self-Regulatory Organizations; Notice of Filing of Proposed Rule Change by the Chicago Board Options Exchange, Inc., Relating to Fines for Position Limit Infractions

December 6, 1993.

Pursuant to section 19(b)(1) of the Securities Exchange Act of 1934 ("Act"), 15 U.S.C. 78s(b)(1), notice is

hereby given that on October 25, 1993, the Chicago Board Options Exchange, Inc. ("CBOE" or "Exchange") filed with the Securities and Exchange Commission ("SEC" or "Commission") the proposed rule change as described in Items I, II, and III below, which Items have been prepared by the self-regulatory organization. The Commission is publishing this notice to solicit comments on the proposed rule change from interested persons.

I. Self-Regulatory Organization's Statement of the Terms of Substance of the Proposed Rule Change

Currently, paragraph (g)(1) of Exchange Rule 17.50, "Imposition of Fines for Minor Rule Violations," provides the following fine schedule for position limit violations: (1) A letter of caution plus $1 per contract over 5% of the applicable limit for one to three position limit violations within one calendar year; (2) $1 per contract over the limit for four to six position limit violations within one calendar year; and (3) $5 per contract over the applicable limit for seven or more position limit violations within one calendar year. The CBOE proposes to amend paragraph (g)(1) to establish a separate fine schedule for position limit violations which occur in non-CBOE member customer accounts carried by CBOE member firms, including the accounts of non-member broker-dealers. Specifically, the following fines, which will be imposed on CBOE member firms, will apply to position limit violations occurring in non-member customer accounts: (1) A letter of caution for position limit violations up to 5% in excess of the applicable limit plus $1 per contract above that level for one to six violations within one calendar year; (2) $1 per contract over the applicable limit for seven to 12 position limit violations within one calendar year; and (3) $5 per contract over the applicable limit for 13 or more position limit violations within one calendar year. In calculating the fine thresholds for each CBOE member, all non-member customer account position limit violations occurring within a single calendar year in all of the member's non-member customer accounts will be added together.

The text of the proposal is available at the Office of the Secretary, CBOE, and at the Commission.

II. Self-Regulatory Organization's Statement of the Purpose Of, and Statutory Basis For, the Proposed Rule Change

In its filing with the Commission, the self-regulatory organization included statements concerning the purpose of and basis for the proposed rule change and discussed any comments it received on the proposed rule change. The text of these statements may be examined at the places specified in Item IV below. The self-regulatory organization has prepared summaries, set forth in sections (A), (B), and (C) below, of the most significant aspects of such statements.

(A) Self-Regulatory Organization's Statement of the Purpose Of, and Statutory Basis For, the Proposed Rule Change

The CBOE states that the purpose of the proposal is to adopt a separate fine schedule for position limit violations occurring in non-member customer accounts that are carried by CBOE member firms (*i.e.*, accounts of customers who are not CBOE members). CBOE Rule 17.50(g)(1) authorizes the Exchange to impose specified fines on members and associated persons who violate the position limits established on CBOE Rules 4.11, "Position Limits," and 24.4, "Position Limits for Broad-Based Index Options." Generally, under CBOE Rule 17.50(g)(1), the fine amounts rise as the number of violations occurring within a single calendar year increases, and the rule does not distinguish between the fines applicable to position limit violations in non-member customer accounts and the fines applicable to position limit violations in members' own accounts and accounts carried for CBOE market makers.

Under the proposal, CBOE Rule 17.50(g)(1) would retain the same fine amounts for all types of accounts, but would increase the number of cumulative infractions that may occur in non-member customer accounts before the fine is triggered. For purposes of the amended rule, all accounts of a non-member broker-dealer would be treated as non-member customer accounts and all violations occurring in such accounts would be tallied cumulatively for each CBOE member. In addition, the Exchange proposes to rephrase the current language of paragraph (g)(1) to indicate more clearly that a letter of caution is given for position limit violations of up to 5% of the applicable limit for one to three position limit violations occurring within a single calendar year, and that a fine of $1 per contract applies to violations exceeding that limit.

The Exchange believes that the proposal accommodates key monitoring-related differences between non-member customer accounts and the accounts of members. The CBOE states that although CBOE members are well positioned generally to prevent, or to detect and promptly correct, position limit infractions in their own accounts or in accounts they carry for CBOE market makers, the CBOE and its members are positioned less effectively to monitor the aggregate trading commitments of non-CBOE broker-dealers or customers and to ensure the prompt correction of position limit violations by such persons. The CBOE states that factors such as customers trading through multiple firms, customers entering into Clearing Member Trade Assignment ("CMTA") agreements,[1] firms having multiple registered representatives, and investment advisors managing several accounts make it more difficult as a practical matter for member firms to prevent, or to detect and correct a position limit violation by a customer, including a broker-dealer "customer," that is not a CBOE member. As a result, the CBOE believes that the fine tiers suitable with respect to CBOE members' own accounts can be inappropriately strict when applied to firms carrying a number of non-member customer accounts. The proposed rule change is designed to eliminate that potential inequity.

The Exchange believes that the proposal will permit the effective enforcement of the Exchange's position limit rules while taking into account compliance and monitoring realities. The CBOE states that situations involving numerous violations and/or substantial overages will continue to be referred to the CBOE's Business Conduct Committee for appropriate sanctions on a case by case basis.

The CBOE believes that the proposed rule change is consistent with section 6(b) of the Act, in general, and with section 6(b)(5), in particular, in that it is designed to prevent fraudulent and manipulative acts and practices, to promote just and equitable principles of trade, and to protect investors and the public interest.

(B) Self-Regulatory Organization's Statement on Burden on Competition

The CBOE does not believe that the proposed rule change will impose any burden on competition.

[1] The CMTA is a process offered by the Options Clearing Corporation ("OCC") which enables an OCC clearing member to have trades executed on its behalf on an exchange without holding exchange membership. In order to participate in this process, the OCC clearing member who has authorized an exchange member to execute trades on its behalf must file a CMTA agreement with the OCC.

(C) Self-Regulatory Organization's Statement on Comments on the Proposed Rule Change Received From Members, Participants or Others

No written comments were solicited or received with respect to the proposed rule change.

III. Date of Effectiveness of the Proposed Rule Change and Timing for Commission Action

Within 35 days after the publication of this notice in the **Federal Register** or within such longer period (i) as the Commission may designate up to 90 days of such date if it finds such longer period to be appropriate and publishes its reason for so finding or (ii) as to which the self-regulatory organization consents, the Commission will:

(a) By order approve such proposed rule change, or

(b) Institute proceedings to determine whether the proposed rule change should be disapproved.

IV. Solicitation of Comments

Interested persons are invited to submit written data, views and arguments concerning the foregoing. Persons making written submissions should file six copies thereof with the Secretary, Securities and Exchange Commission, 450 Fifth Street, NW., Washington, DC 20549. Copies of the submission, all subsequent amendments, all written statements with respect to the proposed rule change that are filed with the Commission, and all written communications relating to the proposed rule change between the Commission and any person, other than those that may be withheld from the public in accordance with the provisions of 5 U.S.C. 552, will be available for inspection and copying at the Commission's Public Reference Section, 450 Fifth Street, NW., Washington, DC. Copies of such filing will also be available for inspection and copying at the principal office of the above-mentioned self-regulatory organization. All submissions should refer to the file number in the caption above and should be submitted by January 3, 1994.

For the Commission, by the Division of Market Regulation, pursuant to delegated authority.[2]

Jonathan G. Katz,

Secretary.

[FR Doc. 93–30295 Filed 12–10–93; 8:45 am]

BILLING CODE 8010–01–M

[2] 17 CFR 200.30–3(a)(12) (1993).

[Release No. 34–33278; File No. SR–MSTC–93–11]

Self-Regulatory Organizations; Midwest Securities Trust Co.; Filing and Immediate Effectiveness of Proposed Rule Change

December 3, 1993.

Pursuant to section 19(b)(1) of the Securities Exchange Act of 1934 ("Act"),[1] notice is hereby given that on October 20, 1993, the Midwest Securities Trust Company ("MSTC") filed with the Securities and Exchange Commission ("Commission") the proposed rule change (File No. SR–MSTC–93–11) as described in Items I, II, and III below, which items have been prepared primarily by MSTC. The Commission is publishing this notice to solicit comments on the proposed rule change from interested persons.

I. Self-Regulatory Organization's Statement of the Terms of Substance of the Proposed Rule Change

The proposed rule change will enable MSTC to accept for deposit securities, which are eligible for deposit at MSTC, in denominations of less than $1,000.

II. Self-Regulatory Organization's Statement of the Purpose of, and Statutory Basis for, the Proposed Rule Change

In its filing with the Commission, MSTC included statements concerning the purpose of and basis for the proposed rule change and discussed any comments it received on the proposed rule change. The text of these statements may be examined at the places specified in Item IV below. MSTC has prepared summaries, set forth in sections A, B, and C below, of the most significant aspects of such statements.

A. Self-Regulatory Organization's Statement of the Purpose of, and Statutory Basis for, the Proposed Rule Change

The purpose of the proposal is to enable MSTC to accept for deposit securities, which are eligible for deposit at MSTC, in denominations of less than $1,000 ("baby bonds").

The proposed rule change is consistent with the requirements of the Act, particularly section 17A of the Act,[2] in that it facilitates the prompt and accurate clearance and settlement of securities transactions and will assure the safeguarding of securities and funds which are in MSTC's custody and control or for which MSTC is responsible.

B. Self-Regulatory Organization's Statement on Burden on Competition

MSTC believes that no burden will be placed on competition as a result of the proposed rule change.

C. Self-Regulatory Organization's Statement on Comments on the Proposed Rule Change Received From Members, Participants or Others

MSTC has neither solicited nor received written comments on the proposed rule change.

III. Date of Effectiveness of the Proposed Rule Change and Timing for Commission Action

The foregoing rule change has become effective pursuant to section 19(b)(3)(A) of the Act[3] and subparagraph (e)(4) of Securities Exchange Act Rule 19b–4[4] because the proposed rule change effects changes in existing services of MSTC that: (i) Do not adversely affect the safeguarding of securities or funds in the custody or control of MSTC or for which it is responsible and (ii) do not significantly affect the respective rights or obligations of MSTC or persons using the services.

At any time within sixty days of the filing of such proposed rule change, the Commission may summarily abrogate such rule change if it appears to the Commission that such action is necessary or appropriate in the public interest, for the protection of investors, or otherwise in furtherance of the purposes of the Act.

IV. Solicitation of Comments

Interested persons are invited to submit written data, views, and arguments concerning the foregoing. Persons making written submissions should file six copies thereof with the Secretary, Securities and Exchange Commission, 450 Fifth Street, NW., Washington, DC 20549. Copies of the submission, all subsequent amendments, all written statements with respect to the proposed rule change that are filed with the Commission, and all written communications relating to the proposed rule change between the Commission and any person, other than those that may be withheld from the public in accordance with the provisions of 5 U.S.C. 552, will be available for inspection and copying in the Commission's Public Reference Room, 450 Fifth Street, NW.,

[1] 15 U.S.C. 78s(b)(1) (1988).

[2] 15 U.S.C. 78q–1 (1988).

[3] 15 U.S.C. 78s(b)(3)(A) (1988).

[4] 17 CFR 240.19b–4(e)(4) (1991).

Washington, DC 20549. Copies of such filing will also be available for inspection and copying at the principal office of MSTC. All submissions should refer to File No. SR–MSTC–93–11 and should be submitted by January 3, 1994.

For the Commission by the Division of Market Regulation, pursuant to delegated authority.[5]

Margaret H. McFarland,

Deputy Secretary.

[FR Doc. 93–30341 Filed 12–10–93; 8:45 am]

BILLING CODE 8010–01–M

[Release No. 34–33297; File No. SR–NASD–93–46]

Self-Regulatory Organizations; Filing of Proposed Rule Change by National Association of Securities Dealers, Inc. Relating to the Content and Review of Clearing Agreements

December 7, 1993.

Pursuant to section 19(b)(1) of the Securities Exchange Act of 1934 ("Act"),[1] notice is hereby given that on November 12, 1993 the National Association of Securities Dealers, Inc. ("NASD" or "Association") filed with the Securities and Exchange Commission ("SEC" or "Commission") the proposed rule change as described in Items I, II, and III below, which Items have been prepared by the NASD.[2] The Commission is publishing this notice to solicit comments on the proposed rule change from interested persons.

I. Self-Regulatory Organization's Statement of the Terms of Substance of the Proposed Rule Change

The NASD is proposing to add a new Section to Article III of the Rules of Fair Practice to require members entering into clearing or carrying agreements to specify the obligations and supervisory responsibilities of both the introducing and clearing firm. The proposed rule was published for member comment in Notice to Members 92–32 (June 1992), to which the NASD received 12 comment letters. In response to these comments, the NASD made certain changes to the proposed rule and published it for member vote in NASD Notice to Members 93–50 (Aug. 1993). The proposed rule was approved by the NASD membership.[3] Below is the text of the proposed rule changes. New language is italicized.

Clearing Agreements

Sec.

(a) All clearing or carrying agreements entered into by a member, except where any party to the agreement is also subject to a comparable rule of a national securities exchange, shall specify the respective functions and responsibilities of each party to the agreement and shall, at a minimum, specify the responsibility of each party with respect to each of the following matters:

(1) Opening, approving and monitoring customer accounts;

(2) Extension of credit;

(3) Maintenance of books and records;

(4) Receipt and delivery of funds and securities;

(5) Safeguarding of funds and securities;

(6) Confirmations and statements;

(7) Acceptance of orders and execution of transactions;

(8) Whether, for purposes of the Securities and Exchange Commission's financial responsibility rules adopted under the Securities Exchange Act of 1934, as amended, and the Securities Investor Protection Act, as amended, and regulations adopted thereunder, customers are customers of the clearing member; and

(9) The requirement to provide customer notification under Subsection (d) of this Section.

(b) Whenever a clearing member designated to the NASD for oversight pursuant to section 17 of the Securities Exchange Act of 1934, as amended, or a rule of the Securities and Exchange Commission adopted thereunder, amends any of its clearing or carrying agreements with respect to any item enumerated in Subsections (a)(1) through (a)(9) of this Section or enters in to a new clearing or carrying agreement with an introducing member, the clearing member shall submit the agreement to the NASD for review and approval.

(c) Whenever an introducing member designated to the NASD for oversight pursuant to section 17 of the Securities Exchange Act of 1934, as amended, or a rule of the Securities and Exchange Commission adopted thereunder, amends its clearing or carrying agreement with a clearing member designated to another self-regulatory organization for oversight with respect to any item enumerated in Subsections (a)(1) through (a)(9) of this Section or enters into a new clearing agreement with another clearing member, the introducing member shall submit the agreement to its local NASD district office for review.

(d) Each customer whose account is introduced on a fully disclosed basis shall be notified in writing upon the opening of his account of the existence of the clearing or carrying agreement.

II. Self-Regulatory Organization's Statement of the Purpose of, and Statutory Basis for, the Proposed Rule Change

In its filing with the Commission, the NASD included statements concerning the purpose of and basis for the proposed rule change and discussed any comments it received on the proposed rule change. The text of these statements may be examined at the places specified in Item IV below. The NASD has prepared summaries, set forth in Sections (A), (B), and (C) below, of the most significant aspects of such statements.

(A) Self-Regulatory Organization's Statement of the Purpose of, and Statutory Basis for, the Proposed Rule Change

The NASD does not currently require its members who enter into clearing or carrying agreements to specify the respective functions and responsibilities of each party. New York Stock Exchange ("NYSE") Rule 382 and American Stock Exchange ("Amex") Rule 400, which are identical, require respective Exchange members to submit carrying agreements to the Exchange for approval prior to becoming effective and to identify the party responsible for certain enumerated functions. The NASD believes it is important to adopt a standard for such agreements that is similar to these rules. The NASD is proposing to amend the Rules of Fair Practice to require that all clearing or carrying agreements entered into by a member specify the respective functions and responsibilities of each party to the agreement. The intent of the proposed rule is to clarify the obligations and supervisory responsibilities of clearing and introducing members.

At the time of the SEC's consideration of the NYSE's proposed rule, the NASD commented to the SEC that permitting certain functions to be allocated to the introducing firm may result in compliance failures and violations resulting from the inability of the introducing member to perform adequately those functions. The NASD urged that firms should not be permitted

---

[5] 17 CFR 200.30–3(a)(12) (1991).

[1] 15 U.S.C. 78s(b)(1) (1988).

[2] The NASD amended the proposed rule change once subsequent to its original filing on August 18, 1993. This amendment provided the result of the membership vote and responded to two comment letters received in response to the membership vote. Letter from Robert E. Aber, Vice President & General Counsel, Nasdaq Stock Market, Inc., to Selwyn Notelovitz, Branch Chief, SEC (Nov. 12, 1993).

[3] Out of 2045 ballots received, 1429 were in favor, 397 opposed, 8 did not vote and 211 ballots were unsigned.

to avoid obligations or responsibilities which would otherwise be theirs under the securities laws.[4] In approving NYSE Rule 382, the SEC recognized the NASD's concerns and stated "no contractual arrangement for the allocation of functions between an introducing and carrying organization can operate to relieve either organization from its respective responsibilities under federal securities laws and applicable SRO rules."[5] The NASD believes that the rule proposed herein reflects the principles previously asserted by the NASD and noted by the SEC.

The first seven provisions of new Subsection (a) of the proposed rule mirror the provisions of NYSE Rule 382(b) and Amex Rule 400(b) and require that all clearing or carrying agreements entered into by any member specify, at a minimum, the respective functions and responsibilities of the parties to the agreement with regard to: opening and approving customer accounts, extending credit, keeping books and records, receiving and delivering funds and securities, safeguarding funds and securities, preparing confirmations and statements, and accepting orders and executing transactions.

Since the proposed rule was published for member comment in Notice to Members 92–32 (June 1992), two new provisions have been added to Subsection (a). Proposed Subsection (a)(8) requires the agreement to address whether, for purposes of the Securities Investor Protection Act and the financial responsibility rules adopted under the Act, customers are customers of the clearing member. If an introducing member intends to qualify for lower net capital, then the clearing or carrying agreement must clearly state that the customers are customers of the clearing member. Absent such a provision, the SEC's net capital rule will treat the introducing member as a firm in possession of customer funds or securities subject to the higher net capital requirements of such a designation. Proposed subsection (a)(9) requires the allocation of compliance with the customer notification requirement of Subsection (d) of the proposed rule, discussed below. Finally, Subsection (a) provides that it does not apply to clearing or carrying agreements if either party to the agreement is also subject to a comparable rule of a national securities exchange.

Proposed Subsections (b) and (c) impose filing requirements with respect to new agreements and amendments to agreements. Subsection (b) requires any clearing member designated to the NASD for compliance oversight to file with the NASD for review and approval: (1) Any new clearing or carrying agreement entered into with an introducing member, and (2) any amended clearing or carrying agreement where any item enumerated in Subsections (a)(1) through (a)(9) has been revised.

Subsection (c) requires any introducing member designated to the NASD for compliance oversight to file with the introducing member's local NASD district office for review only: (1) Any new clearing or carrying agreement entered into with a clearing member, and (2) any amended clearing or carrying agreement entered into with a clearing member designated to another self-regulatory organization for oversight where any item enumerated in Subsections (a)(1) through (a)(9) has been revised. The submission by the introducing firm to the NASD District of either a new or amended agreement for review presumes that such agreement has already been submitted to the NASD or a national securities exchange by the clearing firm and approved.

Proposed Subsection (d) requires each customer whose account is introduced on a fully disclosed basis to be notified of the existence of the clearing agreement at the time the account is opened. As set forth above, proposed Subsection (d)(9) requires that the agreement specify whether the clearing or introducing member will be responsible for compliance with this provision.

The NASD believes that the proposed rule change is consistent with the provisions of section 15A(b)(6) of the Act,[6] which requires that the rules of the association be designed to prevent fraudulent and manipulative acts, promote just and equitable principles of trade, and protect investors and the public interest. The rule would create consistency and uniformity in the regulation of clearing agreements by all self-regulatory organizations on an industry-wide basis. In addition, the rule would also reduce confusion regarding the identity of the member responsible for certain introducing and clearing obligations by requiring that all clearing and carrying agreements (except those already subject to a similar rule of a national securities exchange) specify the functions and responsibilities of each party, and that agreements and amendments thereto be filed for review and approval by clearing members and for review by introducing members where the member is designated to the NASD for compliance oversight.

(B) Self-Regulatory Organization's Statement on Burden on Competition

The NASD does not believe that the proposed rule change will result in any burden on competition that is not necessary or appropriate in furtherance of the purposes of the Act, as amended.

(C) Self-Regulatory Organization's Statement on Comments on the Proposed Rule Change Received From Members, Participants, or Others

As noted above, the proposed rule change was published for comment by the NASD in Notice to Members 92–32 (June 1992). Twelve comments were received in response thereto. Of the 12 comment letters received, one favored the rule with no revisions, eight were in favor with suggested revisions, one was expressly opposed, and two were generally opposed and suggested revisions.

Consistency With NYSE and Amex—Subsections (a) and (d)

Rule 382 of the New York Stock Exchange and Rule 400 of the American Stock Exchange are identical (together, the "Exchange Rules") and require Exchange members to submit carrying agreements to the Exchange for approval prior to becoming effective.[7] Subsection (b) of the Exchange Rules requires agreements under which accounts are to be carried on a fully disclosed basis to identify specifically the allocation of seven enumerated functions between the carrying and introducing member. Similarly, Subsection (a) of the NASD's proposed rule would require clearing and carrying agreements of NASD members to identify the allocation of the same enumerated functions required by the Exchange Rules.[8] The most frequent

[4] See Letter from John E. Pinto, Jr., Vice President, Surveillance, NASD, to Nelson S. Kibler, Assistant Director, SEC (Dec. 31, 1981).

[5] Securities Exchange Act Release No. 18497 (Feb. 19, 1982), 47 FR 8284 (Feb. 25, 1982). See also Securities Exchange Act Release No. 18758 (May 24, 1982), 47 FR 24001 (Jun. 2, 1982) (Approving Amex Rule 400); Securities Exchange Act Release No. 18924 (July 26, 1982), 47 FR 33354 (Aug. 2, 1982) (clarifying that, under the appropriate circumstances, the phrase "applicable SRO Rules" was not intended to prohibit an SRO from relieving a party to a carrying agreement from certain responsibilities which would accrue to that party absent the agreement).

[6] 15 U.S.C. 78o–3(b)(6).

[7] See NYSE Rule 382(a) and Amex Rule 400(a).

[8] The Exchange Rules require and the proposed rule would require carrying agreements to identify, at a minimum, the following functions:

(1) Opening, approving and monitoring of accounts;

(2) Extension of credit;

Continued

comment made was that the proposed rule, being substantially similar to the Exchange Rules, would contribute to consistency and uniformity in the regulation of clearing arrangements by all self-regulatory organizations ("SROs") on an industry-wide basis. Some commenters said the proposed rule's requirement that clearing or carrying agreements specify responsibilities for certain enumerated functions would add burdensome administrative requirements and increase compliance costs with no real benefit to the customer. The NASD agrees with the majority of commenters that the allocation of responsibilities of clearing and introducing members in their agreements consistent with the Exchange Rules would contribute to consistency and uniformity of regulation and benefit customers.

Subsection (c) of the Exchange Rules requires that customers whose accounts are carried pursuant to an agreement on a fully disclosed basis be notified of the existence of the agreement and of the "relationship between the introducing and carrying organization." Subsection (d) of the NASD's proposed rule also requires notification to customers of the existence of an agreement under which accounts are introduced on a fully disclosed basis, but differs from the Exchange Rules in that it would additionally require disclosure of the terms of the agreement specified in the enumerated areas specified in Subsection (a) of the proposed rule. Three commenters suggested that the text of proposed Subsection (d) be revised to conform exactly to the text of the Exchange Rules' Subsection (c), arguing that since the history of NYSE Rule 383(c) shows the NYSE's intent concerning customer notification is the same as what is explicitly required by proposed Subsection (d)[9] and already enforced by the NYSE, there is no reason to make the requirements explicit. The same commenters further argued that mirroring the language of NYSE 382(c) would avoid confusion or the suggestion that different disclosure standards obtain among different SROs in the same area.

Two commenters suggested that the greater specificity of the disclosure requirement of proposed Subsection (d) would increase rather than decrease customer confusion, and result, according to one commenter, in extensive customer communication to clarify the disclosure. One of these commenters favored only a general disclosure requirement concerning the existence of the agreement, and the other commenter specifically requested that proposed Subsection (d) not require the term of the agreement as it relates to Subsection (a) be written, but that it be made available on request, both suggestions of which would be consistent with what is required by the Exchange Rules.

One commenter states that Subsection (d) of the proposed rule is ambiguous, specifying neither which firm is or ought to be the disclosing entity nor the scope of the disclosure beyond what is minimally required by the rule language. Finally, another commenter suggested that the proposed rule not mandate disclosure of responsibilities, but should require that information regarding the enumerated functions of Subsection (a) be made available on request.

In response to the comments above related to proposed Subsection (d), the NASD has amended Subsection (d) to make it consistent with the Exchange Rules and has added new Subsection (a)(9) to require that the agreement specify the member responsible for complying with the notification requirement of Subsection (d). As the commenters noted, current disclosure standards and practices already in place reflect the specific disclosure standards of Subsection (c) of the Exchange Rules, and have been implemented to prevent customer confusion. One commenter stated, for example, that the introducing firm with which she is associated currently sends customers and information guide disclosing the relationship with the clearing firm and generally describing the introducing firm's functions. Another commenter stated that, as a practical matter, all introducing brokers routinely inform customers if a clearing firm is involved and describe generally the clearing firm's functions in order to answer ahead of time questions that will inevitably occur absent such disclosure.

Filing Requirements—Subsections (b) and (c)

Commenters argued that the filing requirements of Subsections (b) and (c) of the proposed rule create duplicative, unnecessary filings of the same agreement by both the introducing firm and the clearing firm. One commenter stated that only the clearing firm ought to be required to submit the agreement or any changes to it. Another commenter, perceiving that Subsections (b) and (c) of the proposed rule may create duplicative filing requirements, made the following specific suggestions: (1) Require only the clearing firm to submit the clearing agreement for initial approval or for subsequent substantive changes; (2) require that the clearing firm demonstrate by documentation to each introducing firm with which it contracts that its clearing agreement has already been reviewed and approved by the NASD; and (3) require that an introducing firm submit for review and approval the clearing agreement only upon initial approval to transact a general securities business and thereafter maintain in its files copies of any clearing agreements.

Another commenter added that filing overlap would increase the NASD's routine examination workload and reduce the effectiveness of NASD oversight in more important areas.

The NASD has amended the language of Subsections (b) and (c) to clarify the operation of those provisions. The NASD has determined that the rule's filing requirements will not create a duplicative filing requirement that interferes with ongoing business operations or significantly increases administrative burdens of introducing firms. A clearing firm is required to submit to the NASD for review and approval a new clearing agreement or an amended clearing agreement that amends any of the enumerated functions, *unless* the clearing member is subject to review and approval pursuant to a comparable rule of a national securities exchange, in which case the clearing firm would not have to submit the same clearing agreement to the NASD for review and approval

While it is true that the proposed rule would create a new filing requirement for introducing firms, the filing would be a mere submission to an NASD District office not requiring approval by the NASD prior to becoming effective. Duplicative filings occur only where the clearing firm through which a member firm introduces accounts is not subject

(3) Maintenance of books and records;

(4) Receipt and delivery of funds and securities;

(5) Safeguarding of funds and securities;

(6) Confirmations and statements;

(7) Acceptance of orders and execution of transactions.

[9] See, comment letters of Broadcourt Capital Corp and the Securities Industry Association, which both cite NYSE Information Memo No. 82–18 (Mar. 5, 1982) wherein the Exchange is quoted as stating, in part, that the notice requirement of Subsection (c) of NYSE 382 shall be "'sufficiently meaningful'" such that there is a description of responsibilities to be assumed by the introducing and carrying organizations for "'extension of credit, furnishing of investment advice, monitoring of account activity to determine consistency with customer's stated investment objectives, delivery and receipt of customers funds/securities, confirmations and statements, where to address customer correspondence/complaints, etc.'" Both commenters argued that subsection (d) of the NASD proposed rule would make explicit what is already implicit and enforced under Subsection (c) of NYSE Rule 382.

to review and approval pursuant to a comparable rule of a national securities exchange, and only in the sense that the same clearing agreement is being submitted by the clearing member to the NASD for review and approval and by the introducing firm to an NASD District office for review only.

Application of the Proposed Rule to "Piggy-Back" Clearing Arrangements

A "piggy-back" clearing arrangement exists when an introducing broker-dealer, which maintains clearing contract with a clearing firm, enters into an agreement with a second broker-dealer in which the introducing broker-dealer performs "clearing" functions for the second broker-dealer by reintroducing the second broker-dealer's accounts to the clearing firm.

Two commenters requested that the applicability of the proposed rules to this situation be clarified and specifically suggested that the NASD: (1) Require the parties to a "piggy-back" contract to file the contracts with the NASD, unless already filed with another SRO, and (2) require that either the introducing broker-dealer or the second broker-dealer notify public customers of the contract between them and of the allocation of responsibilities contained in the agreement. One commenter further suggested that the NASD should refer to "piggy-back" arrangements in the commentary accompanying enactment of the new rule. The same commenter stated that it should not be the responsibility of the clearing firm to look beyond its contract with the introducing broker-dealer and that the clearing firm should be required to do no more than comply with the existing rules applicable to it.

The NASD believes that the language of the proposed rule is clear in requiring an agreement between each introducing member and the clearing member.[10]

Other Comments

One commenter supports the text of the proposed rule in this entirety with no changes stating that non-NYSE members will now be held accountable for the same rules as NYSE members with respect to clearing arrangements and that customers will now have a much clearer idea of the division of responsibilities under a clearing and introducing relationship.

Three commenters thought clearing agreements either are, or ought to be, reviewed during on-site compliance inspections by the NASD. The fact that clearing agreement may be reviewed during on-site inspections does not address the purpose behind the proposed rule, which is to require more specific disclosure of allocation of certain functions among introducing and clearing firms.

One commenter suggested that once the clearing firm's standard agreement has been approved, approval of subsequent agreements submitted by introducing firms using the standard agreement should not be delayed for approval. The same commenter also suggested that the NASD rule only require the agreement to contain certain enumerated functions, and not to whom they should be allocated.

The current language of the proposed rule is not inconsistent with the above suggestions since an introducing firm will only be submitting for review those clearing agreements that have already been submitted by the clearing firm and approved by the NASD or an Exchange.

As noted above, the proposed rule change was published for member vote in Notice to Members 93–50 (Aug. 1993). Two unsolicited comments were received in response thereto. Both of these commenters opposed to the proposed rule change.

One commenter opposed the proposed rule for being unclear concerning the sale of unregistered securities. The commenter stated that situations exist wherein a clearing broker knowingly allows an introducing firm to sell unregistered securities, then uses the clearing agreement, which places all the responsibility on the introducing firm, as a defense to any wrongdoing. The commenter stated that he could not vote in favor of the proposed rule if the NASD is going to allow clearing firms to absolve themselves of such obligations and responsibilities.

The proposed rule requires members entering into clearing or carrying agreements to specify certain obligations and supervisory responsibilities of each party to the agreement. However, as stated in the discussion of the proposed rule in Notice to Members 93–50 (Aug. 1993), no such agreement can operate to relieve either party from responsibilities under federal securities laws. Thus, the proposed rule neither augments nor diminishes the existing requirement prohibiting the sale of unregistered securities which are required to be registered under federal securities laws.

One commenter stated that "clearing firms will often mishandle clients' accounts after or on the eve of the introducing firm going out of business" by placing current "long positions in the introducing firm's proprietary accounts * * * in[to] clients' accounts in unauthorized trades and cash balances in the clients' accounts are used to pay for the unauthorized transaction." In addition, the commenter argues that "the clearing firms will liquidate good positions in the clients' accounts and use the proceeds to purchase unauthorized proprietary positions of the introducing broker in the clients' accounts" for the purpose of satisfying debits the introducing broker may have had.

Clearing firms that engage in unauthorized trading practices are subject to liability for such activities under existing securities laws. No clearing or carrying agreement between an introducing firm can serve to abrogate the requirement not to engage in unauthorized trading.

One commenter stated that if the intent of the rule is that clearing firms be responsible for safekeeping of customer funds and securities, then the existing customer protection rules should state so in more detailed language.

The intent of the proposed rule under subsection (a) is to require introducing and clearing firms to clarify, with respect to certain functions, their respective responsibilities and obligations. The NASD does not have the authority to amend customer protection rules promulgated by the SEC under authority of the Act.

One commenter objected to the proposed rule's implication that the clearing firm must be considered the owner of the introducing firm's accounts in order for the clearing firm to exercise its compliance responsibilities under the customer protection rules. The commenter stated that a clearing firm, by definition, is already obligated to follow such rules. The commenter stated that the proposed rule "would make an introducing broker feel that a path has been created for some future dominance of the accounts in question."

The proposed rule does not compel the clearing firm to be considered the owner of the introducing member's accounts. Subsection (a)(8) of the proposed rule requires identification of

[10] The SEC's recently amended net capital rule, SEC Rule 15c3–1, requires that to be considered a fully disclosed introducing firm, a member must have a clearing agreement that provides that, for purposes of the Securities Investors Protection Act and the SEC's financial responsibility rules, customers are customers of the clearing firm, not the introducing firm (See, Securities Exchange Act Release No. 31511 (Nov. 24, 1992); 57 FR 56963 (Dec. 2, 1992) (amending SEC Rule 15c3–1)). In addition, such introducing firms must not hold customer funds or securities. The clearing firm must issue account statements directly to the customers, and the statements must disclose that the customer's funds and securities are located at the clearing firm, not the introducing firm. The failure of the introducing firm to adhere to any of these requirements can subject it to higher net capital requirements.

whether customers are customers of the clearing firm for purposes of SEC financial responsibility rules and net capital computations.

Finally, one commenter stated that the possible notification by the introducing firm to its clients that they may in fact also be "someone else's customers" would be both embarrassing and insulting for the introducing member.

Subsection (d) of the proposed rule only requires that customers be notified of the existence of the clearing agreement, not its contents, nor does it require that the introducing firm characterize their relationship to the clearing firm as being that of a "customer."

The NASD does not believe that it is necessary to amend further the rule language in response to the two additional comments received in response to the membership vote and summarized above. The NASD believes that the proposed rule, by clarifying the allocation of responsibilities and obligations among clearing and introducing members, will reduce customer confusion regarding the identity of the responsible party when questions or concerns arise.

III. Date of Effectiveness of the Proposed Rule Change and Timing for Commission Action

Within 35 days of the date of publication of this notice in the **Federal Register** or within such longer period: (i) As the Commission may designate up to 90 days of such date if it finds such longer period to be appropriate and publishes its reasons for so finding or (ii) as to which the self-regulatory organization consents, the Commission will:

A. By order approve such proposed rule change, or

B. Institute proceedings to determine whether the proposed rule change should be disapproved.

IV. Solicitation of Comments

Interested persons are invited to submit written data, views, and arguments concerning the foregoing. Persons making written submissions should file six copies thereof with the Secretary, Securities and Exchange Commission, 450 Fifth Street, NW., Washington, DC 20549. Copies of the submission, all subsequent amendments, all written statements with respect to the proposed rule change that are filed with the Commission, and all written communications relating to the proposed rule change between the Commission and any person, other than those that may be withheld from the public in accordance with the provisions of 5 U.S.C. 552, will be available for inspection and copying in the Commission's Public Reference Room. Copies of such filing will also be available for inspection and copying at the principal office of the NASD. All submissions should refer to file number SR–NASD–93–46 and should be submitted by January 3, 1994.

For the Commission, by the Division of Market Regulation, pursuant to delegated authority.[11]

Margaret H. McFarland,

Deputy Secretary.

[FR Doc. 93–30342 Filed 12–10–93; 8:45 am]

BILLING CODE 8010–01–M

[Release No. 34–33292; File No. SR–NASD–93–70]

Self-Regulatory Organizations; National Association of Securities Dealers, Inc.; Notice of Filing and Order Granting Accelerated Approval of Proposed Rule Change Relating to Policy Statement on Market Closings

December 6, 1993.

Pursuant to section 19(b)(1) of the Securities Exchange Act of 1934" ("Act"), 15 U.S.C. 78s(b)(1), notice is hereby given that on November 22, 1993, the National Association of Securities Dealers, Inc. ("NASD") filed with the Securities and Exchange Commission ("SEC" or "Commission") the proposed rule change as described in Items I and II below, which Items have been prepared by NASD. The Commission is publishing this notice to solicit comments on the proposed rule change from interested persons.

I. Self-Regulatory Organization's Statement of the Terms of Substance of the Proposed Rule Change

The NASD is proposing to amend its Policy Statement on Market Closings ("Statement" or "Policy Statement"), adopted pursuant to Article VII, Section 3 of the NASD By-Laws,[1] to extend its expiration date one year to December 31, 1994. No other terms of the Policy Statement are proposed to be amended.

II. Self-Regulatory Organization's Statement of the Purpose of, and Statutory Basis for, the Proposed Rule Change

In its filing with the Commission, the NASD included statements concerning the purpose of and basis for the proposed rule change and discussed any comments it received on the proposed rule change. The text of these statements may be examined at the places specified in Item IV below. The NASD has prepared summaries, set forth in sections (A), (B), and (C) below, of the most significant aspects of such statements.

(A) Self-Regulatory Organization's Statement of the Purpose of, and Statutory Basis for, the Proposed Rule Change

The Policy Statement was adopted as a rule proposal of the NASD under Article VII, Section 3 of the NASD By-Laws which provides the Association authority, acting through a designated committee of the Board of Governors, to take appropriate action in the event of an emergency or extraordinary market conditions. Article VII, Section 3 was adopted by the NASD as a result of the events of October 1987. The provision was drafted to enable the NASD to respond to future crises with a maximum degree of flexibility, providing properly tailored responses to varying situations.[2]

The Commission requested the NASD to express its views on the "circuit breaker" proposal of the President's Working Group on Financial Markets and the Policy Statement was adopted in response to that request. The Policy Statement was approved on October 19, 1988.[3] As originally approved, the Policy Statement was to expire December 31, 1989, unless modified or extended prior thereto by the NASD. The expiration date of the Policy Statement has been extended a number of times.[4] On July 16, 1993, the Board again approved an extension of the expiration date of the Statement through December 31, 1994.

---

[11] 17 CFR 200.30–3(a)(12).

[1] NASD Manual, By-Laws, Art. VII, Sec. 3, (CCH) ¶1182A.

[2] The Release approving the Policy Statement stated that "the Commission believes the proposal provides the NASD with the flexibility to deal with extraordinary market conditions such as existed in October, 1987." *See* Securities Exchange Act Release No. 26072 (September 12, 1988), 53 FR 36143 (September 16, 1988).

[3] Securities Exchange Act Release No. 26198 (October 19, 1988), 53 FR 41673 (October 24, 1988) (approving File No. SR–NASD–88–46).

[4] See Securities Exchange Act Release No. 27370 (October 23, 1989), 54 FR 43881 (October 27, 1989) (approving File No. SR–NASD–89–46, extending expiration date through December 31, 1990); Securities Exchange Act Release No. 28694 (December 12, 1990), 55 FR 52119 (December 19, 1990) (approving File No. SR–NASD–90–60, extending expiration date through December 31, 1991); Securities Exchange Act Release No. 30113 (December 20, 1991), 56 FR 67341 (December 30, 1991) (File No. SR–NASD–91–70, extending expiration date through January 31, 1992); and Securities Exchange Act Release No. 30304 (January 29, 1992), 57 FR 4658 (February 6, 1992) (approving File No. SR–NASD–92–02, extending expiration date through December 31, 1993).

The policy Statement expresses the views of the NASD Board of Governors as of July 16, 1993, concerning progress made on the numerous proposals emanating from the October 1987 crisis. From time to time, the Board will review progress made on the recommendations set forth in the Statement as well as other developments as they may occur. The views of the Board may change and the NASD's proposed response to a specific set of circumstances. The Statement does not in any way preclude the NASD from taking any other action that may be appropriate under other circumstances. The NASD is proposing to extend the expiration date of the Statement one year to December 31, 1994. The request for only a one-year extension is because of concern regarding the diminishing percentage relationship between the 250 and 400 point thresholds to the increasing level of the Dow Jones Industrial Average which is at an historical high. It is the intention of the NASD to reevaluate the thresholds in the Policy Statement.

The NASD believes the proposed rule change is consistent with the provisions of section 15A(b)(6) of the Act, as the Policy Statement is designed to foster cooperation and coordination with the Commission and the other self-regulatory organizations engaged in regulating the United States securities markets.

B. Self-Regulatory Organization's Statement on Burden on Competition

The NASD does not believe that the proposed rule change will result in any burden on competition that is not necessary or appropriate in furtherance of the purposes of the Act, as amended.

C. Self-Regulatory Organization's Statement on Comments on the Proposed Rule Change Received From Members, Participants, or Others

Written comments were neither solicited nor received.

III. Date of Effectiveness of the Proposed Rule Change and Timing for Commission Action

The NASD has requested that the Commission find good cause pursuant to section 19(b)(2) for approving the proposed rule change prior to the 30th day after publication in the **Federal Register**. In support of its request, the NASD stated that the Policy Statement will expire on December 31, 1993, unless the proposed rule change is approved prior thereto and that the proposed rule change merely extends the Policy Statement and makes no other change to the terms of the Policy Statement.

The Commission finds that the proposed rule change is consistent with the requirements of the Act and the rules and regulations thereunder applicable to the NASD, and in particular, the requirements of section 15A.

The Commission finds good cause for approving the proposed rule change prior to the 30th day after the date of publication of notice of filing thereof in the **Federal Register** because there are no changes being made to the current provisions, which originally were subject to the full notice and comment procedures, and accelerated approval would enable the Policy Statement to continue on an uninterrupted basis. The Commission believes, therefore, that granting accelerated approval of the proposed rule change is appropriate and consistent with Sections 15A and 19(b) of the Act.[5]

IV. Solicitation of Comments

Interested persons are invited to submit written data, views, and arguments concerning the foregoing. Persons making written submissions should file six copies thereof with the Secretary, Securities and Exchange Commission, 450 Fifth Street, NW., Washington, DC 20549. Copies of the submission, all subsequent amendments, all written statements with respect to the proposed rule change that are filed with the Commission, and all written communications relating to the proposed rule change between the Commission and any person, other than those that may be withheld from the public in accordance with the provisions of 5 U.S.C. 552, will be available for inspection and copying in the Commission's Public Reference Room. Copies of such filing will also be available for inspection and copying at the principal office of the NASD. All submissions should refer to the file number in the caption above and should be submitted by January 3, 1994.

It is therefore ordered, pursuant to section 19(b)(2) of the Act, that the proposed rule change, SR–NASD–93–70 be, and hereby is, approved.

[5] The Commission reaffirms its request that the NASD implement its Policy Statement by implementing a trading halt as quickly as practicable whenever the New York Stock Exchange and other equity markets have suspended trading. See Securities Exchange Act Release No. 27370 (October 23, 1989), 54 FR 43881 (October 27, 1989).

For the Commission, by the Division of Market Regulation, pursuant to delegated authority, 17 CFR 200.30–3(a)(12).

Jonathan G. Katz,

Secretary.

[FR Doc. 93–30294 Filed 12–10–93; 8:45 am]

BILLING CODE 8010–01–M

[Release No. 34–33284; File No. SR–NYSE–93–41]

Self-Regulatory Organizations; Filing and Order Granting Partial Accelerated Approval of a Proposed Rule Change by the New York Stock Exchange, Inc. Relating to Position and Exercise Limits for Equity Options and Certain Index Options

December 3, 1993.

Pursuant to section 19(b)(1) of the Securities Exchange Act of 1934 ("Act"), 15 U.S.C. 78s(b)(1), notice is hereby given that on October 28, 1993, the New York Stock Exchange, Inc. ("NYSE" or "Exchange") filed with the Securities and Exchange Commission ("Commission") the proposed rule change as described in Items I, and II below, which Items have been prepared by the NYSE. The Commission is publishing this notice to solicit comments on the proposed rule change from interested persons.

I. Self-Regulatory Organization's Statement of the Terms of Substance of the Proposed Rule Change

The NYSE, pursuant to Rule 19b–4, proposes to amend NYSE Rule 704 and 705 for the purposes of increasing position and exercise limits [1] for individual equity and index options. The proposed position limit increases closely parallel proposals previously submitted by the other options exchanges.

The text of the proposed rule change is available at the Office of the Secretary, NYSE, and the Commission.

II. Self-Regulatory Organization's Statement of the Purpose of, and Statutory Basis for, the Proposed Rule Change

In its filing with the Commission, the self-regulatory organization included statements concerning the purpose of, and statutory basis for, the proposed rule change and discussed any

[1] Position limits impose a ceiling on the number of options contracts in each class on the same side of the market (i.e., aggregating long calls and short puts or long puts and short calls) that can be held or written by an investor or group of investors acting in concert. Exercise limits prohibit an investor or group of investors acting in concert from exercising more than a specified number of puts or calls in a particular class within five consecutive business days.

comments it received on the proposed rule change. The text of these statements may be examined at the places specified in Item IV below. The Exchange has prepared summaries, set forth in sections (A), (B), and (C) below, of the most significant aspects of such statements.

A. Self-Regulatory Organization's Statement of the Purpose of, and Statutory Basis for, the Proposed Rule Change

(1) Purpose

For equity options, the NYSE proposes to amend paragraph (b)(i) of Rule 704 to increase its three-tiered position limits from 8,000, 5,500, and 3,000 contracts to 10,500, 7,500, and 4,500 contracts, respectively.

For broad-based index options, the NYSE proposes to amend paragraph (c)(i) of Rule 704 to increase position limits from 45,000 contracts on the same side of the market covering the same underlying index stock group, no more than 25,000 of which may be of the series having the same expiration date, to 60,000 such contracts, no more than 35,000 of which may be of the series having the same expiration date. For reduced value index stock group options, the Exchange proposes to amend paragraph (c)(i) to increase the position limits from 450,000 contracts on the same side of the market covering the same underlying index stock group, no more than 250,000 of which may be of the series having the same expiration date, to 600,000 such contracts, no more than 350,000 of which may be of the series having the same expiration date.

In addition, the Exchange proposes to amend paragraph (c)(ii) of Rule 704 to increase the maximum allowable broad index option position (inclusive of that provision's hedging exemption) from 125,000 contracts to 170,000 contracts.

For industry index options, the Exchange proposes to amend paragraph (d)(i) of Rule 704 to increase its three-tiered position limits from 4,000, 6,000, and 8,000 contracts to 5,500, 7500, and 10,500 contracts, respectively.

Because the Exchange's equity and industry index option exercise limits are identical to their position limit counterparts, the Exchange is proposing exercise limit increases that are identical to the above-described position limit increases. Also, the Exchange proposes to increase the number of broad-based index option contracts that a holder may exercise from 25,000 to 35,000 (plus those exercisable pursuant to Rule 705's incorporation of the hedge exemption set forth in paragraph (c)(ii) of Rule 704).

In addition, the proposed rule change adds to Rule 704 a definition of "reduced value index stock group options." The definition had formerly resided (in identical form) in subparagraph (d) of Supplementary Material .30 to Rule 703 (Series of Options Open for Trading). However, the definition was deleted from that location in File No. SR–NYSE–93–03.

The proposed position and exercise limit increases would increase the flexibility available to institutional investors and broker-dealers in establishing their investment strategies. In addition, it would add depth and liquidity to the market, while improving the ability of Exchange specialists to make markets, as it improves their ability to hedge their positions. Furthermore, in the environment of multiple options trading, the Exchange believes it would be inconsistent for the options exchanges to have position and exercise limits that were anything other than uniform.

(2) Basis

The Exchange believes that the proposed rule change is consistent with the requirements under section 6(b)(5) of the Act, which provides that an exchange have rules that are designed to prevent fraudulent and manipulative acts and practices, to promote just and equitable principles of trade, to remove impediments to and perfect the mechanism of a free and open market and a national market system, and, in general, to protect investors and the public interest.

B. Self-Regulatory Organization's Statement on Burden on Competition

The NYSE does not believe that the proposed rule change will impose any burden on competition that is not necessary or appropriate in furtherance of the purposes of the Act.

C. Self-Regulatory Organization's Statement on Comments on the Proposed Rule Change Received From Members, Participants, or Others

The NYSE has not solicited, and does not intend to solicit, comments on the proposed rule change. The Exchange has not received any unsolicited written comments from members or other interested parties.

III. Date of Effectiveness of the Proposed Rule Change and Timing for Commission Action

The Exchange has requested that the proposed rule changes be given accelerated effectiveness pursuant to section 19(b)(2) of the Act.

The Commission finds that the proposed rule changes are consistent with the requirements of the Act and the rules and regulations thereunder applicable to a national securities exchange, and, in particular, the requirements of section 6(b)(5).[2] Specifically, the Commission concludes that the proposed position and exercise limits of 4,500 contracts, 7,500 contracts, and 10,500 contracts for equity options, and 5,500 contracts, 7,500 contracts, and 10,500 contracts for narrow-based index options, will further increase the potential depth and liquidity of the options market as well as the underlying cash market without significantly increasing concerns regarding intermarket manipulations or disruptions of the market for the options or underlying securities.[3]

Since the inception of standardized options trading, the options exchanges have had rules imposing limits on the aggregate number of options contracts that a member or customer could hold or exercise. These rules are intended to prevent the establishment of large options positions that can be used or might create incentives to manipulate or disrupt the underlying market so as to benefit the options position. In particular, position and exercise limits are designed to minimize the potential for mini-manipulations[4] and for corners or squeezes of the underlying market. They also impose a ceiling on the maximum position an investor with inside corporate or market information can establish through the use of options. In addition, they serve to reduce the possibility for disruption of the options market itself, especially in illiquid options classes.

In establishing position and exercise limits, the Commission has been careful to balance two competing concerns. First, the Commission has recognized that the limits must be sufficient to prevent investors from disrupting the market for the underlying security by

[2] 15 U.S.C. 78f(b)(5) (1982).

[3] This order partially approves the proposal with regard to increasing position and exercise limits for individual equity options and narrow-based stock index options. In partially approving the NYSE proposal, the Commission is deferring judgment on the position and exercise limit increase and corresponding hedge exemptions for broad-based stock index options pending further review. In addition, the Commission is also approving nonsubstantive additions to Rule 704 regarding the definition of "reduced value index stock group options" which formerly was found in Supplementary Material .30 to Rule 703.

[4] Mini-manipulation is an attempt to influence, over a relatively small range, the price movement in a stock to benefit a previously established derivatives position.

acquiring and exercising a number of options contracts disproportionate to the deliverable supply and average trading volume of the underlying security. At the same time, the Commission has realized the limits must not be established at levels that are so low as to discourage participation in the options market by institutions and other investors with substantial hedging needs or to prevent specialists and market makers from adequately meeting their obligations to maintain a fair and orderly market.[5]

In October 1980, the Commission approved proposed rule changes by the options exchanges to increase position and exercise limits from 1,000 to 2,000 contracts for all individual equity options classes.[6] In conjunction with the approval, the Commission received commitments from the options exchanges to study the effects of the increased limits. The Commission indicated that the experience gained under the increased limits, if coupled with adequate monitoring and surveillance procedures, could serve as a basis for considering further position and exercise limit modifications.

In July 1983, the Commission approved a further increase in position and exercise limits for individual stock options based on a tiering approach.[7] Limits for options on stocks with the greatest trading volume and public float were increased to 4,000 contracts and limits on all other options classes were increased to 2,500 contracts.[8] In approving the increased limits under a two-tiered approach, the Commission recognized that securities with active and deep trading markets, as well as broad public ownership, were more difficult to manipulate or disrupt than securities having less active and deep markets and having smaller public floats.[9] Accordingly, the Commission believed that the tiering approach to position and exercise limits was appropriate because it would increase the depth and liquidity of the stock options markets without significantly increasing concerns regarding manipulation and disruption of the market for the underlying securities.[10] In addition, the Commission noted that tiering was consistent with the gradual, evolutionary approach that the Commission and the exchanges have adopted in increasing position and exercise limits.

The Commission in 1984 approved the NYSE's existing position and exercise limit framework for narrow-based index options.[11] The NYSE's narrow-based index options position limit requirements are identical to the rules imposed by the other options exchanges and provide for a three-tiered approach.[12] Specifically, position limits for narrow-based stock index options are either 4,000, 6,000, or 8,000 contracts, depending on the concentration of the stocks in the index.[13]

Lastly, the Commission approved the NYSE's existing position and exercise limit framework for individual equity options in March 1985. This approval extended the tiering approach commenced by the options exchanges in 1983.[14] The Commission in its 1985 Release reiterated its prior findings maintaining that liberalizing position and exercise limits will further increase the potential depth and liquidity of the individual stock options market without significantly increasing concerns regarding intermarket manipulations or disruptions of the market for the options or underlying securities.[15]

The other options exchanges are also proposing a similar structure that would establish position and exercise limits for individual equity options of either 4,500, 7,500 or 10,500 contracts depending on certain criteria related to the trading volume of the underlying stock or a combination of both the trading volume and the number of shares outstanding of the underlying stock, as well as narrow-based stock index option position limits of 5,500, 7,500, and 10,500 depending on the concentration of the stocks included in the index.[16]

The Commission previously has noted that the markets for securities with active and deep trading markets, as well as broad public ownership, are more difficult to manipulate or disrupt than those securities that are less active with smaller public floats. The proposed increases recognize this by seeking to minimize the restraints on those options classes that can accommodate larger limits without significantly increasing manipulation concerns. In particular, the proposed limit of 10,500 contracts for options on the most actively traded, widely held securities, permits the commission to avoid placing unnecessary restraints on those options where the manipulative potential is the least and the need for increased positions, both by traders and institutional investors, likely would be the greatest.[17]

Under the proposal, the current lowest tier of 3,000 contracts for

---

[5] See H.R. Rep. No. IFC–3, 96th Cong., 1st Sess at 189–91 (Comm. Print 1978) ("Options Study").

[6] See Securities Exchange Act Release No. 17237 (October 22, 1980), 45 FR 71453, October 28, 1980 ("1980 Release").

[7] See Securities Exchange Act Release No. 19975 (July 15, 1983), 48 FR 33389 ("1983 Release").

[8] To be eligible for the 4,000 contract limit an underlying security must have had either (i) trading volume of at least 20,000,000 shares during the most recent six month trading period; or (ii) trading volume of at least 15,000,000 shares during the most recent six month trading period and at least 60,000,000 shares currently outstanding. All other options not meeting these requirements were subject to the 2,500 contract limits.

[9] While options are traded on some stocks with a public float of several hundred million shares, options exchange rules authorize options to be traded on stocks with as few as seven million shares outstanding. Similarly, while some options stocks have average daily trading volume of up to a million or more shares, exchange rules authorize options trading on stocks with annual trading volume as low as 2.4 million shares. Specifically, the quantitative listing and maintenance standards require: (1) A minimum of 7 and 6.3 million shares outstanding, respectively, which are owned by persons other than "insiders" as defined in section 16 of the Act; (2) a minimum of 2,000 and 1,600 shareholders, respectively; (3) trading volume of at least 2.4 and 1.8 million shares, respectively, during the past 12 months; (4) for an original listing, the market price per share of the underlying security must have closed at or above $7.50 during the majority of business days over the preceding three months; and (5) to maintain its listing, the market price per share of the underlying security must have closed at or above $5 during the majority of business days over the preceding six months. See NYSE Rule 716.

[10] In approving the higher two-tiered limits, the Commission also noted that the absence of discernible manipulation problems under the current limits were an indication that modest additional increases were justified.

[11] See Securities Exchange Act Release No. 20663 (February 17, 1984), 49 FR 7171.

[12] See Securities Exchange Act Release Nos. 20075 (August 12, 1983), 48 FR 37556; 20125 (August 26, 1983), 48 FR 40046; 20437 (December 2, 1983), 48 FR 55229; and 21032 (June 8, 1984), 49 FR 24964.

[13] See NYSE Rule 704.

[14] Specifically, the existing requirements approved by the Commission in the 1985 Release provide for: (1) A 8,000 contract limit for options on an underlying stock that has either (a) trading volume of at least 40 million shares during the most recent six month trading period, or (b) trading volume of at least 30 million shares during the most recently six month trading period and at least 120 million shares currently outstanding; (2) a 5,500 contract limit for options on an underlying stock that has either (a) trading volume of at least 20 million shares during the most recent six month trading period; or (b) trading volume of at least 15 million shares during the most recent six month trading period and at least 40 million shares currently outstanding; and (3) a 3,000 contract limit for all other options classes. See Securities Exchange Act Release No. 21907 (April 4, 1985), 50 FR 13440 ("1985 Release").

[15] See 1983 Release *supra* note 7 and 1985 Release *supra* note 14.

[16] See Securities Exchange Act Release Nos. 32310 (May 14, 1993), 58 FR 29675 (PSE) and 32309 (May 14, 1993), 58 FR 29653 (Phlx) and File Nos. SR–Amex–93–27 and SR–CBOE–93–43.

[17] Options that would be eligible for the highest tier limit of 10,500 contracts currently have a 8,000 contract limit. Although a 2,500 contract limit increase (31%) for some options may appear to be substantial, the Commission believes that the qualifying criteria for the highest tier ensure that only options on the most actively traded and heavily capitalized securities will be eligible for the 10,500 contract limit.

individual equity options would be increased 50% to 4,500. An increase of 1,500 contracts or 50% for the lowest tier, 2,000 contracts or 36% for the middle tier, and 2,500 contracts or 31% for the highest tier, appears to be appropriate and consistent with the Commission's evolutionary approach to position and exercise limits.[18]

Finally, the absence of discernible manipulative problems under the current three-tiered limit system for individual equity and narrow-based index options leads the Commission to conclude that the increases being proposed by the Exchange are warranted.[19] The Commission recognizes that there are no ideal limits in the sense that options positions of any given size can be stated conclusively to be free of any manipulative concerns. The NYSE and the Commission, however, have relied largely on the absence of discernible manipulation or disruption problems under current limits as an indicator that additional increases can be safely considered. The Commission believes for these reasons that the liberalization of existing position and exercise limits is now appropriate.[20]

The Commission notes that the Exchange has had considerable experience monitoring the current three-tiered framework in individual equity options and narrow-based stock index options.[21] The Commission has not found that differing position and exercise limit requirements based on the particular options product to have created programming or monitoring problems for securities firms, or to have led to significant customer confusion. Based on the current experience in handling position and exercise limits, the Commission believes that the increase in position and exercise limits for individual equity and narrow-based stock index will not cause significant problems.

Since the 1985 Release, the options exchanges, including the NYSE, have been consistently updating and automating their surveillance systems. The Commission believes that the Exchange's surveillance programs will be adequate to detect and deter the use of illegal position limits by market participants as well as detect and deter attempted manipulative activity and other trading abuses.

The Commission finds good cause for approving the proposed rule change prior to the thirtieth day after the date of publication of notice thereof in the **Federal Register** because accelerating approval will permit the position and exercise limit framework for individual equity options and narrow-based stock index options across options exchanges to remain uniform.

IV. Solicitation of Comments

Interested persons are invited to submit written data, views and arguments concerning the foregoing. Persons making written submissions should file six copies thereof with the Secretary, Securities and Exchange Commission, 450 Fifth Street, NW., Washington, DC 20549. Copies of the submission, all subsequent amendments, all written statements with respect to the proposed rule change that are filed with the Commission, and all written communications relating to the proposed rule change between the Commission and any person, other than those that may be withheld from the public in accordance with the provisions of 5 U.S.C. 552, will be available for inspection and copying in the Commission's Public Reference Section, 450 Fifth Street NW., Washington, DC 20549. Copies of such filing will also be available for inspection and copying at the principal office of the NYSE. All submissions should refer to File Number SR–NYSE–93–41 and should be submitted by January 3, 1994.

V. Conclusion

For the foregoing reasons, the Commission finds that the amended proposed rule change of the NYSE to increase position and exercise limits for individual equity options to 4,500, 7,500, or 10,500 contracts (depending on certain market related criteria) and narrow-based stock index options to either 5,500, 7,500, or 10,500 contracts (depending on the percentage stock concentration within the index) is consistent with the requirements of the Act and the rules and regulations thereunder applicable to a national securities exchange, and in particular, the requirements of section 6,[22] and the rules thereunder.

It is therefore ordered, Pursuant to section 19(b)(2) of the Act,[23] that the proposed rule change (SR–NYSE–93–41) relating to an increase in position and exercise limits is approved.

For the Commission, by the Division of Market Regulation, pursuant to delegated authority.[24]

Margaret H. McFarland,

Deputy Secretary.

[FR Doc. 93–30343 Filed 12–10–93; 8:45 am]

BILLING CODE 8010–01–M

[18] In the case of narrow-based stock index options, position and exercise limits will be increased by 38%, 25%, and 19% for the lowest to highest limit tiers, respectively.

[19] The Commission believes that the proposed limits for narrow-based index options, when viewed in conjunction with margin requirements, address concerns with respect to the potential use of narrow-based index options to circumvent limits applicable to positions held in options on individual stocks. Currently, margin requirements for both individual equity and narrow-based index options are 100% of the option premium plus 20% of the underlying product value, less any out-of-the-money amount, with a minimum premium plus 10% of the underlying product value. In addition, positions in narrow-based index options are not required to be aggregated with positions in options on the individual stocks comprising the indexes.

[20] The Commission continues to believe that proposals to increase position limits and exercise limits must be justified and evaluated separately. After reviewing the proposed exercise limits, along with the eligibility criteria for each tier, the Commission has concluded that the exercise limit increases for the three-tiered framework, do not raise manipulation problems or increase concerns over market disruption in the underlying securities.

[21] Currently, for example, position and exercise limits for individual equity options are limited to positions of 8,000, 5,500, and 3,000 contracts, while narrow-based index option position limits have a similar three-tiered structure of 8,000, 6,000, and 4,000 contracts, depending on the concentration of a component stock in the index.

[22] 15 U.S.C. 78f (1982).

[23] 15 U.S.C. 78s(b)(2) (1982).

[24] 17 CFR 200.30–3(a)(12) (1993).

[Release No. 34–33282; File No. SR–PSE–92–38]

Self-Regulatory Organizations; Pacific Stock Exchange Inc.; Order Partially Approving Proposed Rule Change Relating to Increasing Position and Exercise Limits for Individual Equity Options and Narrow-Based Stock Index Options

December 3, 1993.

I. Introduction

On November 1, 1992, the Pacific Stock Exchange, Inc. ("PSE" or "Exchange") submitted to the Securities and Exchange Commission ("Commission" or "SEC"), pursuant to Section 19(b)(1) of the Securities Exchange Act of 1934 ("Act")[1] and Rule 19b–4 thereunder,[2] a proposed rule change to amend its rules for the purpose of increasing position and exercise limits[3] applicable to equity and stock index options.[4] The position and

[1] 15 U.S.C. 78s(b)(1) (1982).

[2] 17 CFR 240.19b–4 (1993).

[3] Position limits impose a ceiling on the number of option contracts in each class on the same side of the market (i.e., aggregating long calls and short puts or long puts and short calls) that can be held or written by an investor or group of investors acting in concert. Exercise limits prohibit an investor or group of investors acting in concert from exercising more than a specified number of puts or calls in a particular class within five consecutive business days. Throughout this approval order, the terms "position limits" or "limits" will be used to refer to both position and exercise limits.

[4] The Exchange also proposed to amend the equity hedge exemption by allowing securities that

exercise limits applicable to a particular option contract would depend on certain criteria relating to the trading volume of the underlying stock or a combination of both the trading volume and the number of shares outstanding of the underlying stock.[5] In the case of narrow-based stock index options, the position and exercise limits applicable would depend upon the percentage capitalization of a single or specified group of stocks within the index.[6]

The PSE amended the proposal on December 4, 1992 and January 14, 1993.[7] The proposed rule change as amended was subsequently published for comment in the **Federal Register** on May 21, 1993.[8] No comments were received on the proposed rule change as amended. This order partially approves the proposal as amended with regard to increasing position and exercise limits for individual equity options and narrow-based stock index options.[9]

II. Background and Description

Since the inception of standardized options trading, the options exchanges have had rules imposing limits on the aggregate number of options contracts that a member or customer could hold or exercise. These rules are intended to prevent the establishment of large options positions that can be used or might create incentives to manipulate or disrupt the underlying market so as to benefit the options position. In particular, position and exercise limits are designed to minimize the potential for mini-manipulations[10] and for corners or squeezes of the underlying market. They also impose a ceiling on the maximum position an investor with inside corporate or market information can establish through the use of options. In addition, they serve to reduce the possibility for disruption of the options market itself, especially in illiquid options classes.

In establishing position and exercise limits, the Commission has been careful to balance two competing concerns. First, the Commission has recognized that the limits must be sufficient to prevent investors from disrupting the market for the underlying security by acquiring and exercising a number of options contracts disproportionate to the deliverable supply and average trading volume of the underlying security. At the same time, the Commission has realized the limits must not be established at levels that are so low as to discourage participation in the options market by institutions and other investors with substantial hedging needs or to prevent specialists and market makers from adequately meeting their obligations to maintain a fair and orderly market.[11]

In October 1980, the Commission approved proposed rule changes by the options exchanges to increase position and exercise limits from 1,000 to 2,000 contracts for all individual equity options classes.[12] In conjunction with the approval, the Commission received commitments from the options exchanges to study the effects of the increased limits. The Commission indicated that the experience gained under the increased limits, if coupled with adequate monitoring and surveillance procedures, could serve as a basis for considering further position and exercise limit modifications.

In July 1983, the Commission approved a further increase in position and exercise limits for individual stock options based on a tiering approach.[13] Limits for options on stocks with the greatest trading volume and public float were increased to 4,000 contracts and limits on all other options classes were increased to 2,500 contracts.[14] In approving the increased limits under a two-tiered approach, the Commission recognized that securities with active and deep trading markets, as well as broad public ownership, were more difficult to manipulate or disrupt than securities having less active and deep markets and having smaller public floats.[15] Accordingly, the Commission believed that the tiering approach to position and exercise limits was appropriate because it would increase the depth and liquidity of the stock options markets without significantly increasing concerns regarding manipulation and disruption of the market for the underlying securities.[16] In addition, the Commission noted that tiering was consistent with the gradual, evolutionary approach that the Commission and the exchanges have adopted in increasing position and exercise limits.

The Commission in 1984 approved the PSE's existing position and exercise limit framework for narrow-based index

---

are convertible into the underlying stocks to be a basis for the exemption. The Commission granted approval of this portion of the proposal on a pilot basis, on September 14, 1993. See Securities Exchange Act Release No. 32900 (September 14, 1993), 58 FR 49077.

[5] Specifically, the PSE proposal as amended would establish position and exercise limits of: (1) 10,500 contracts for options on an underlying stock that had either (a) trading volume of at least 40 million shares during the most recent six-month trading period, or (b) trading volume of at least 30 million shares during the most recent six-month trading period and at least 120 million shares outstanding; (2) 7,500 contracts for options on an underlying stock that had either (a) trading volume of at least 20 million shares during the most recent six-month trading period, or (b) trading volume of at least 15 million shares during the most recent six month trading period and at least 40 million shares currently outstanding; and (3) 4,500 contracts for all other options.

[6] Specifically, the PSE proposal as amended would establish position and exercise limits of: (1) 5,500 contracts if any single stock in the index accounted, on average, for 30% or more of the index value during the preceding 30-day period; (2) 7,500 contracts if any single stock in the index accounted, on average, for 20% or more of the index value or that any five stocks in the index in the aggregate, on average, accounted for more than 50% of the index value, but no single stock in the index, on average, accounted for 30% or more of the index value, during the preceding 30-day period; or (3) 10,500 contracts if the Exchange determines that the conditions specifying the lower limits have not been met. In addition, the PSE has also proposed that the standard position limit for broad-based stock index options be set at 19,500 contracts.

[7] Amendments submitted by the PSE to the original position limit proposal amended the position and exercise limit levels for individual equity options and narrow-based index options.

[8] See Securities Exchange Act Release No. 32310 (May 14, 1993), 58 FR 29675.

[9] In partially approving the PSE proposal, the Commission is deferring judgment on the position and exercise limit increase proposal for broad-based stock index options pending further review.

[10] Mini-manipulation is an attempt to influence, over a relatively small range, the price movement in a stock to benefit a previously established derivatives position.

[11] See H.R. Rep. No. IFC–3, 96th Cong., 1st Sess at 189–91 (Comm. Print 1978) ("Options Study").

[12] See Securities Exchange Act Release No. 17237 (October 22, 1980), 45 FR 71453, October 28, 1980 ("1980 Release").

[13] See Securities Exchange Act Release No. 19975 (July 15, 1983), 48 FR 33389 ("1983 Release").

[14] To be eligible for the 4,000 contract limit an underlying security must have had either (i) trading volume of at least 20,000,000 shares during the most recent six month trading period; or (ii) trading volume of at least 15,000,000 shares during the most recent six month trading period and at least 60,000,000 shares currently outstanding. All other options not meeting these requirements were subject to the 2,500 contract limits.

[15] While options are traded on some stocks with a public float of several hundred million shares, options exchange rules authorize options to be traded on stocks with as few as seven million shares outstanding. Similarly, while some options stocks have average daily trading volume of up to a million or more shares, exchange rules authorize options trading on stocks with annual trading volume as low as 2.4 million shares. Specifically, the quantitative listing and maintenance standards require: (1) A minimum of 7 and 6.3 million shares outstanding, respectively, which are owned by persons other than "insiders" as defined in Section 16 of the Act; (2) a minimum of 2,000 and 1,600 shareholders, respectively; (3) trading volume of at least 2.4 and 1.8 million shares, respectively, during the past 12 months; (4) for an original listing, the market price per share of the underlying security must have closed at or above $7.50 during the majority of business days over the preceding three months; and (5) to maintain its listing, the market price per share of the underlying security must have closed at or above $5 during the majority of business days over the preceding six months. See PSE Rule 3.6.

[16] In approving the higher two-tiered limits, the Commission also noted that the absence of discernible manipulation problems under the current limits were an indication that modest additional increases were justified.

options.[17] The PSE's narrow-based index options position limit requirements are identical to the rules imposed by the other options exchanges and provide for a three-tiered approach.[18] Specifically, position limits for narrow-based stock index options are either 4,000, 6,000, or 8,000 contracts, depending on the concentration of the stocks in the index.[19]

Lastly, the Commission approved the PSE's existing position and exercise limit framework for individual equity options in March 1985. This approval extended the tiering approach commenced by the options exchanges in 1983.[20] The Commission in its 1985 Release reiterated its prior findings maintaining that liberalizing position and exercise limits will further increase the potential depth and liquidity of the individual stock options market without significantly increasing concerns regarding intermarket manipulations or disruptions of the market for the options or underlying securities.[21]

The other options exchanges are also proposing a similar structure that would establish position and exercise limits for individual equity options of either 4,500, 7,500 or 10,500 contracts depending on certain criteria related to the trading volume of the underlying stock or a combination of both the trading volume and the number of shares outstanding of the underlying stock,[22] as well as narrow-based stock index option position limits of 5,500, 7,500, and 10,500 depending on the concentration of the stocks included in the index.[23]

[17] See Securities Exchange Act Release No. 21032 (June 8, 1984), 49 FR 24964.

[18] See Securities Exchange Act Release Nos. 20075 (August 12, 1983), 48 FR 37556; 20125 (August 26, 1983), 48 FR 40046; 20663 (February 17, 1984), 49 FR 7171; and 20437 (December 2, 1983), 48 FR 55229.

[19] See PSE Rule 7.6 and *supra* note 6.

[20] Specifically, the existing requirements approved by the Commission in the 1985 Release provide for: (1) A 8,000 contract limit for options on an underlying stock that has either (a) trading volume of at least 40 million shares during the most recent six month trading period, or (b) trading volume of at least 30 million shares during the most recent six month trading period and at least 120 million shares currently outstanding; (2) a 5,500 contract limit for options on an underlying stock that has either (a) trading volume of at least 20 million shares during the most recent six month trading period; or (b) trading volume of at least 15 million shares during the most recent six month trading period and at least 40 million shares currently outstanding; and (3) a 3,000 contract limit for all other options classes. See Securities Exchange Act Release No. 21907 (April 4, 1985), 50 FR 134400 ("1985 Release").

[21] See 1983 Release *supra* note 13 and 1985 Release *supra* note 20.

[22] See *supra* note 5.

[23] See *supra* note 6.

III. Discussion

The Commission concludes that the proposed position and exercise limits of 4,500 contracts, 7,500 contracts, and 10,500 contracts for equity options, and 5,500 contracts, 7,500 contracts, and 10,500 contracts for narrow-based index options, will further increase the potential depth and liquidity of the options market as well as the underlying cash market without significantly increasing concerns regarding intermarket manipulations or disruptions of the market for the options or underlying securities.

The Commission previously has noted that the markets for securities with active and deep trading markets, as well as broad public ownership, are more difficult to manipulate or disrupt than those securities that are less active with smaller public floats. The proposed increases recognize this by seeking to minimize the restraints on those options classes that can accommodate larger limits without significantly increasing manipulation concerns. In particular, the proposed limit of 10,500 contracts for options on the most actively traded, widely held securities, permits the Commission to avoid placing unnecessary restraints on those options where the manipulative potential is the least and the need for increased positions, both by traders and institutional investors, likely would be the greatest.[24]

Under the proposal, the current lowest tier of 3,000 contracts for individual equity options would be increased 50% to 4,500. An increase of 1,500 contracts or 50% for the lowest tier, 2,000 contracts or 36% for the middle tier, and 2,500 contracts or 31% for the highest tier, appears to be appropriate and consistent with the Commission's evolutionary approach to position and exercise limits.[25]

Finally, the absence of discernible manipulative problems under the current three-tiered limit system for individual equity and narrow-based index options leads the Commission to conclude that the increases being proposed by the Exchange are warranted.[26] The Commission recognizes that there are no ideal limits in the sense that options positions of any given size can be stated conclusively to be free of any manipulative concerns. The PSE and the Commission, however, have relied largely on the absence of discernible manipulative or disruption problems under current limits as an indicator that additional increases can be safely considered. The Commission believes for these reasons that the liberalization of existing position and exercise limits is now appropriate.[27]

The Commission notes that the Exchange has had considerable experience monitoring the current three-tiered framework in individual equity options and narrow-based stock index options.[28] The Commission has not found that differing position and exercise limit requirements based on the particular options product to have created programming or monitoring problems for securities firms, or to have led to significant customer confusion. Based on the current experience in handling position and exercise limits, the Commission believes that the increase in position and exercise limits for individual equity and narrow-based stock index will not cause significant problems.

Since the 1985 Release, the options exchanges, including the PSE, have been consistently updating and automating their surveillance systems. The Commission believes that the Exchange's surveillance programs will be adequate to detect and deter the use of illegal position limits by market participants as well as detect and deter

[24] Options that would be eligible for the highest tier limit of 10,500 contracts currently have a 8,000 contract limit. Although a 2,500 contract limit increase (31%) for some options may appear to be substantial, the Commission believes that the qualifying criteria for the highest tier ensure that only options on the most actively traded and heavily capitalized securities will be eligible for the 10,500 contract limit.

[25] In the case of narrow-based stock index options, position and exercise limits will be increased by 38%, 25%, and 19% for the lowest to highest limit tiers, respectively.

[26] The Commission believes that the proposed limits for narrow-based index options, when viewed in conjunction with margin requirements, address concerns with respect to the potential use of narrow-based index options to circumvent limits applicable to positions held in options on individual stocks. Currently, margin requirements for both individual equity and narrow-based index options are 100% of the option premium plus 20% of the underlying product value, less any out-of-the-money amount, with a minimum premium plus 10% of the underlying product value. In addition, positions in narrow-based index options are not required to be aggregated with positions in options on the individual stocks comprising the indexes.

[27] The Commission continues to believe that proposals to increase position limits and exercise limits must be justified and evaluated separately. After reviewing the proposed exercise limits, along with the eligibility criteria for each tier, the Commission has concluded that the exercise limit increases for the three-tiered framework, do not raise manipulation problems or increase concerns over market disruption in the underlying securities.

[28] Currently, for example, position and exercise limits for individual equity options are limited to positions of 8,000, 5,500, and 3,000 contracts, while narrow-based index option position limits have a similar three-tiered structure of 8,000, 6,000, and 4,000 contracts, depending on the concentration of a component stock in the index.

attempted manipulative activity and other trading abuses.

IV. Conclusion

For the foregoing reasons, the Commission finds that the amended proposed rule change of the PSE to increase position and exercise limits for individual equity options to 4,500, 7,500, or 10,500 contracts (depending on certain market related criteria) and narrow-based stock index options to either 5,500, 7,500, or 10,500 contracts (depending on the percentage stock concentration within the index) is consistent with the requirements of the Act and the rules and regulations thereunder applicable to a national securities exchange, and in particular, the requirements of section 6,[29] and the rules thereunder.

It is therefore ordered, Pursuant to section 19(b)(2) of the Act,[30] that the proposed rule change (SR–PSE–92–38) relating to an increase in position and exercise limits is approved.

For the Commission, by the Division of Market Regulation, pursuant to delegated authority.[31]

Margaret H. McFarland,

Deputy Secretary.

[FR Doc. 93–30344 Filed 12–10–93; 8:45 am]

BILLING CODE 8010–01–M

[Release No. 34–33288; File No. SR–Phlx–93–07]

Self-Regulatory Organizations; Philadelphia Stock Exchange, Inc.; Order Partially Approving Proposed Rule Change Relating to Increasing Position and Exercise Limits for Individuals Equity Options and Narrow-Based Stock Index Options

December 3, 1993.

I. Introduction

On March 2, 1993, the Philadelphia Stock Exchange, Inc. ("Phlx" or "Exchange") submitted to the Securities and Exchange Commission ("Commission" or "SEC"), pursuant to section 19(b)(1) of the Securities Exchange Act of 1934 ("Act")[1] and Rule 19b–4 thereunder,[2] a proposed rule change to amend its rules for the purpose of increasing position and exercise limits[3] applicable to individual equity options, narrow-based stock index options, and the National Over-the-Counter ("OTC") Index option. The position and exercise limits applicable to a particular option contract would depend on certain criteria relating to the trading volume of the underlying stock or a combination of both the trading volume and the number of shares outstanding of the underlying stock.[4] In the case of narrow-based stock index options, the position and exercise limits applicable would depend upon the percentage capitalization of a single or specified group of stock within the index.[5]

The proposed rule change was published for comment in the **Federal Register** on May 21, 1993.[6] No comments were received on the proposed rule change. This order approves the proposal increasing position and exercise limits for individual equity options and narrow-based stock index options.[7]

II. Background and Description

Since the inception of standardized options trading, the options exchanges have had rules imposing limits on the aggregate number of options contracts that a member or customer could hold or exercise. These rules are intended to prevent the establishment of large options positions that can be used or might create incentives to manipulate or disrupt the underlying market so as to benefit the options position. In particular, position and exercise limits are designed to minimize the potential for mini-manipulations[8] and for corners or squeezes of the underlying market. They also impose a ceiling on the maximum position an investor with inside corporate or market information can establish through the use of options. In addition, they serve to reduce the possibility for disruption of the options market itself, especially in illiquid options classes.

In establishing position and exercise limits, the Commission has been careful to balance two competing concerns. First, the Commission has recognized that the limits must be sufficient to prevent investors from disrupting the market for the underlying security by acquiring and exercising a number of options contracts disproportionate to the deliverable supply and average trading volume of the underlying security. At the same time, the Commission has realized the limits must not be established at levels that are so low as to discourage participation in the options market by institutions and other investors with substantial hedging needs or to prevent specialists and market makers from adequately meeting their obligations to maintain a fair and orderly market.[9]

In October 1980, the Commission approved proposed rule changes by the options exchanges to increase position and exercise limits from 1,000 to 2,000 contracts for all individual equity options classes.[10] In conjunction with the approval, the Commission received commitments from the options exchanges to study the effects of the increased limits. The Commission indicated that the experience gained under the increased limits, if coupled with adequate monitoring and surveillance procedures, could serve as a basis for considering further position and exercise limit modifications.

In July 1983, the Commission approved a further increase in position and exercise limits for individual stock

---

[29] 15 U.S.C. 78f (1982).

[30] 15 U.S.C. 78s(b)(2) (1982).

[31] 17 CFR 200.30–3(a)(12) (1993).

[1] 15 U.S.C. 78s(b)(1) (1982).

[2] 17 CFR 240.19b–4 (1983).

[3] Position limits impose a ceiling on the number of option contracts in each class on the same side of the market (i.e., aggregating long calls and short puts or long puts and short calls) that can be held or written by an investor or group of investors acting in concert. Exercise limits prohibit an investor or group of investors acting in concert from exercising more than a specified number of puts or calls in a particular class within five consecutive business days. Throughout this approval order, the terms "position limits" or "limits" will be used to refer to both position and exercise limits.

[4] Specifically, the Phlx proposal as amended would establish position and exercise limits of: (1) 10,500 contracts for options on an underlying stock that had either (a) trading volume of at least 40 million shares during the most recent six-month trading period, or (b) trading volume of at least 30 million shares during the most recent six-month trading period and at least 120 million shares outstanding; (2) 7,500 contracts for options on an underlying stock that had either (a) trading volume of at least 20 million shares during the most recent six-month trading period, or (b) trading volume of at least 15 million shares during the most recent six month trading period and at least 40 million shares currently outstanding; and (3) 4,500 contracts for all other options.

[5] Specifically, the Phlx proposal as amended would establish position and exercise limits of: (1) 5,500 contracts if any single stock in the index accounted, on average, for 30% or more of the index value during the preceding 30-day period; (2) 7,500 contracts if any single stock in the index accounted, on average, for 20% or more of the index value or that any five stocks in the index in the aggregate, on average, accounted for more than 50% of the index value, but no single stock in the index, on average, accounted for 30% or more of the index value, during the preceding 30-day period; or (3) 10,500 contracts if the Exchange determines that the conditions specifying the lower limits have not been met. In addition, the Phlx is also proposing to increase position and exercise limits from 10,000 to 15,000 contracts for its National OTC Index option.

[6] See Securities Exchange Act Release No. 32309 (May 14, 1993), 58 FR 29653.

[7] In partially approving the Phlx proposal, the Commission is deferring judgment on increasing position and exercise limits for National OTC Index option pending further review.

[8] Mini-manipulation is an attempt to influence, over a relatively small range, the price movement in a stock to benefit a previously established derivatives position.

[9] See H.R. Rep. No. IFC–3, 96th Cong., 1st Sess at 189–91 (Comm. Print 1978) ("Options Study").

[10] See Securities Exchange Act Release No. 17237 (October 22, 1980), 45 FR 71453, October 28, 1980 ("1980 Release").

options based on a tiering approach.[11] Limits for options on stocks with the greatest trading volume and public float were increased to 4,000 contracts and limits on all other options classes were increased to 2,500 contracts.[12] In approving the increased limits under a two-tiered approach, the Commission recognized that securities with active and deep trading markets, as well as broad public ownership, were more difficult to manipulate or disrupt than securities having less active and deep markets and having smaller public floats.[13] Accordingly, the Commission believed that the tiering approach to position and exercise limits was appropriate because it would increase the depth and liquidity of the stock options markets without significantly increasing concerns regarding manipulation and disruption of the market for the underlying securities.[14] In addition, the Commission noted that tiering was consistent with the gradual, evolutionary approach that the Commission and the exchanges have adopted in increasing position and exercise limits.

The Commission in 1983 approved the Phlx's existing position and exercise limit framework for narrow-based index options.[15] The Phlx's narrow-based index options position limit requirements are identical to the rules imposed by the other options exchanges and provide for a three-tiered approach.[16] Specifically, position limits for narrow-based stock index options are either 4,000, 6,000, or 8,000 contracts, depending on the concentration of the stocks in the index.[17]

Lastly, the Commission approved the Phlx's existing position and exercise limit framework for individual equity options in March 1985. This approval extended the tiering approach commenced by the options exchanges in 1983.[18] The Commission in its 1985 Release reiterated its prior findings maintaining that liberalizing position and exercise limits will further increase the potential depth and liquidity of the individual stock options market without significantly increasing concerns regarding intermarket manipulations or disruptions of the market for the options or underlying securities.[19]

The other options exchanges are also proposing a similar structure that would establish position and exercise limits for individual equity options of either 4,500, 7,500 or 10,500 contracts depending on certain criteria related to the trading volume of the underlying stock or a combination of both the trading volume and the number of shares outstanding of the underlying stock,[20] as well as narrow-based stock index option position limits of 5,500, 7,500, and 10,500 depending on the concentration of the stocks included in the index.[21]

III. Discussion

The Commission concludes that the proposed position and exercise limits of 4,500 contracts, 7,500 contracts, and 10,500 contracts for equity options, and 5,500 contracts, 7,500 contracts, and 10,500 contracts for narrow-based index options, will further increase the potential depth and liquidity of the options market as well as the underlying cash market without significantly increasing concerns regarding intermarket manipulations or disruptions of the market for the options or underlying securities.

The Commission previously has noted that the markets for securities with active and deep trading markets, as well as broad public ownership, are more difficult to manipulate or disrupt than those securities that are less active with smaller public floats. The proposed increases recognize this by seeking to minimize the restraints on those options classes that can accommodate larger limits without significantly increasing manipulation concerns. In particular, the proposed limit of 10,500 contracts for options on the most actively traded, widely held securities, permits the Commission to avoid placing unnecessary restraints on those options where the manipulative potential is the least and the need for increased positions, both by traders and institutional investors, likely would be the greatest.[22]

Under the proposal, the current lowest tier of 3,000 contracts for individual equity options would be increased 50% to 4,500. An increase of 1,500 contracts or 50% for the lowest tier, 2,000 contracts or 36% for the middle tier, and 2,500 contracts or 31% for the highest tier, appears to be appropriate and consistent with the Commission's evolutionary approach to position and exercise limits.[23]

Finally, the absence of discernible manipulative problems under the current three-tiered limit system for individual equity and narrow-based index options leads the Commission to conclude that the increases being proposed by the Exchange are

[11] See Securities Exchange Act Release No. 19975 (July 15, 1983), 48 FR 33389 ("1983 Release").

[12] To be eligible for the 4,000 contract limit an underlying security must have had either (i) trading volume of at least 20,000,000 shares during the most recent six month trading period, or (ii) trading volume of at least 15,000,000 shares during the most recent six month trading period and at least 60,000,000 shares currently outstanding. All other options not meeting these requirements were subject to the 2,500 contract limits.

[13] While options are traded on some stocks with a public float of several hundred million shares, options exchange rules authorize options to be traded on stocks with as few as seven million shares outstanding. Similarly, while some options stocks have average daily trading volume of up to a million or more shares, exchange rules authorize options trading on stocks with annual trading volume as low as 2.4 million shares. Specifically, the quantitative listing and maintenance standards require: (1) A minimum of 7 and 6.3 million shares outstanding, respectively, which are owned by persons other than "insiders" as defined in Section 16 of the Act; (2) a minimum of 2,000 and 1,600 shareholders, respectively; (3) trading volume of at least 2.4 and 1.8 million shares, respectively, during the past 12 months; (4) for an original listing, the market price per share of the underlying security must have closed at or above $7.50 during the majority of business days over the preceding three months, and (5) to maintain its listing, the market price per share of the underlying security must have closed at or above $5 during the majority of business days over the preceding six months. See Phlx 1009.

[14] In approving the higher two-tiered limits, the Commission also noted that the absence of discernible manipulation problems under the current limits were an indication that modest additional increases were justified.

[15] See Securities Exchange Act Release No. 20437 (December 2, 1983), 48 FR 55229.

[16] See Securities Exchange Act Release Nos. 20075 (August 12, 1983), 48 FR 37556; 20125 (August 26, 1993), 48 FR 40046; 20663 (February 17, 1984), 49 FR 7171; and 21032 (June 8, 1984), 49 FR 55229.

[17] See Phlx 1001A and *supra* note 6.

[18] Specifically, the existing requirements approved by the Commission in the 1985 Release provide for: (1) A 8,000 contract limit for options on an underlying stock that has either (a) trading volume of at least 40 million shares during the most recent six month trading period, or (b) trading volume of at least 30 million shares during the most recent six month trading period and at least 120 million shares currently outstanding; (2) a 5,500 contract limit for options on an underlying stock that has either (a) trading volume of at least 20 million shares during the most recent six month trading period; or (b) trading volume of at least 15 million shares during the most recent six month trading period and at least 40 million shares currently outstanding; and (3) a 3,000 contract limit for all other options classes. See Securities Exchange Act Release No. 21907 (April 4, 1985), 50 FR 13440 ("1985 Release").

[19] See 1983 Release *supra* note 11 and 1985 Release *supra* note 18.

[20] See *supra* note 4.

[21] See *supra* note 5.

[22] Options that would be eligible for the highest tier limit of 10,500 contracts currently have a 8,000 contract limit. Although a 2,500 contract limit increase (31%) for some options may appear to be substantial, the Commission believes that the qualifying criteria for the highest tier ensure that only options on the most actively traded and heavily capitalized securities will be eligible for the 10,500 contract limit.

[23] In the case of narrow-based stock index options, position and exercise limits will be increased by 38%, 25%, and 19% for the lowest to highest limit tiers, respectively.

warranted.[24] The Commission recognizes that there are no ideal limits in the sense that options positions of any given size can be stated conclusively to be free of any manipulative concerns. The Phlx and the Commission, however, have relied largely on the absence of discernible manipulation or disruption problems under current limits as an indicator that additional increases can be safely considered. The Commission believes for these reasons that the liberalization of existing position and exercise limits is now appropriate.[25]

The Commission notes that the Exchange has had considerable experience monitoring the current three-tiered framework in individual equity options and narrow-based stock index options.[26] The Commission has not found that differing position and exercise limit requirements based on the particular options product to have created programming or monitoring problems for securities firms, or to have led to significant customer confusion. Based on the current experience in handling position and exercise limits, the Commission believes that the increase in position and exercise limits for individual equity and narrow-based stock index will not cause significant problems.

Since the 1985 Release, the options exchanges, including the Phlx, have been consistently updating and automating their surveillance systems. The Commission believes that the Exchange's surveillance programs will be adequate to detect and deter the use of illegal position limits by market participants as well as detect and deter attempted manipulative activity and other trading abuses.

IV. Conclusion

For the foregoing reasons, the Commission finds that the amended proposed rule change of the Phlx to increase position and exercise limits for individual equity options to 4,500, 7,500, or 10,500 contracts (depending on certain market related criteria) and narrow-based stock index options to either 5,500, 7,500, or 10,500 contracts (depending on the percentage stock concentration within the index) is consistent with the requirements of the Act and the rules and regulations thereunder applicable to a national securities exchange, and in particular, the requirements of section 6,[27] and the rules thereunder.

It is therefore ordered, Pursuant to section 19(b)(2) of the Act,[28] that the proposed rule change (SR–Phlx–93–07) relating to an increase in position and exercise limits is approved.

For the Commission, by the Division of Market Regulation, pursuant to delegated authority.[29]

Margaret H. McFarland,

Deputy Secretary.

[FR Doc. 93–30345 Filed 12–10–93; 8:45 am]

BILLING CODE 8010–01–M

[24] The Commission believes that the proposed limits for narrow-based index options, when viewed in conjunction with margin requirements, address concerns with respect to the potential use of narrow-based index options to circumvent limits applicable to positions held in options on individual stocks. Currently, margin requirements for both individual equity and narrow-based index options are 100% of the option premium plus 20% of the underlying product value, less any out-of-the-money amount, with a minimum premium plus 10% of the underlying product value. In addition, positions in narrow-based index options are not required to be aggregated with positions in options on the individual stocks comprising the indexes.

[25] The Commission continues to believe that proposals to increase position limits and exercise limits must be justified and evaluated separately. After reviewing the proposed exercise limits, along with the eligibility criteria for each tier, the Commission has concluded that the exercise limit increases for the three-tiered framework, do not raise manipulation problems or increase concerns over market disruption in the underlying securities.

[26] Currently, for example, position and exercise limits for individual equity options are limited to positions of 8,000, 5,500, and 3,000 contracts, while narrow-based index option position limits have a similar three-tiered structure of 8,000, 6,000, and 4,000 contracts, depending on the concentration of a component stock in the index.

[27] 15 U.S.C. 78f (1982).

[28] 15 U.S.C. 78s(b)(2) (1982).

[29] 17 CFR 200.30-3(a)(12) (1993).

DEPARTMENT OF TRANSPORTATION

Federal Aviation Administration

[Summary Notice No. PE–93–52]

Petitions for Exemption; Summary of Petitions Received; Dispositions of Petitions Issued

AGENCY: Federal Aviation Administration (FAA), DOT.

ACTION: Notice of petitions for exemption received and of dispositions of prior petitions.

SUMMARY: Pursuant to FAA's rulemaking provisions governing the application, processing, and disposition of petitions for exemption (14 CFR part 11), this notice contains a summary of certain petitions seeking relief from specified requirements of the Federal Aviation Regulations (14 CFR chapter I), dispositions of certain petitions previously received, and corrections. The purpose of this notice is to improve the public's awareness of, and participation in, this aspect of FAA's regulatory activities. Neither publication of this notice nor the inclusion or omission of information in the summary is intended to affect the legal status of any petition or its final disposition.

DATES: Comments on petitions received must identify the petition docket number involved and must be received on or before January 3, 1994.

ADDRESSES: Send comments on any petition in triplicate to: Federal Aviation Administration, Office of the Chief Counsel, Attn: Rule Docket (AGC–200), Petition Docket No. _____, 800 Independence Avenue, SW., Washington, DC 20591.

The petition, any comments received, and a copy of any final disposition are filed in the assigned regulatory docket and are available for examination in the Rules Docket (AGC–19), room 915G, FAA Headquarters Building (FOB 10A), 800 Independence Avenue, SW., Washington, DC 20591; telephone (202) 267–3132.

FOR FURTHER INFORMATION CONTACT: Mr. Frederick M. Haynes, Office of Rulemaking (ARM–1), Federal Aviation Administration, 800 Independence Avenue, SW., Washington, DC 20591; telephone (202) 267–3939.

This notice is published pursuant to paragraphs (c), (e), and (g) of § 11.27 of part 11 of the Federal Aviation Regulations (14 CFR part 11).

Issued in Washington, DC, on December 7, 1993.

Danvers Long,

Acting Assistant Chief Counsel.

Petitions for Exemption

Docket No.: 26690.

Petitioner: AMR Eagle, Inc.

Sections of the FAR Affected: 14 CFR 121.411(a) (2), (3), & (b)(2); 121.413 (b), (c) & (d); 121, Appendix H; 135.303; 135.337(a)(2), (a)(3), & (b)(2); & 135.339 (a)(2) (b) & (c).

Description of Relief Sought/ Disposition: To permit AMR Eagle to use certain highly qualified AMR Eagle or AMR Eagle affiliated instructor pilots and check airmen, assigned to AMR Eagle, to train and check part 121 and 135 certificate holder's pilots.

Docket No.: 27407.

Petitioner: Charles W. Farmer.

Sections of the FAR Affected: 14 CFR 65.91(c) (1) & (2).

Description of Relief Sought/ Disposition: To permit the petitioner to take the Inspection Authorization exam without meeting the requirement to hold airframe and powerplant ratings that are currently effective and have been in effect for at least 3 years.

Docket No.: 27410.

Petitioner: Transport Aviation Directorate.

Sections of the FAR Affected: 14 CFR 129.14.

Description of Relief Sought: To allow Argentinean air taxi operators who operate N registered aircraft to continue to operate until they can obtain a maintenance program approved by the FAA.

Docket No.: 27502.

Petitioner: Bemidji Aviation.

Sections of the FAR Affected: 14 CFR 135.265(d).

Description of Relief Sought: To allow Bemidji Aviation Services, Inc. to provide its pilots 24 consecutive hours of rest within any consecutive 168 hours instead or within any 7 consecutive days.

Docket No.: 27507.

Petitioner: Henry A. Dwight.

Sections of the FAR Affected: 14 CFR 121.383(c).

Description of Relief Sought/ Disposition: To permit the petitioner to serve as a pilot in part 121 air carrier operations after his 60th birthday.

Docket No.: 27510.

Petitioner: James M. Rizor.

Sections of the FAR Affected: 14 CFR 121.383(c).

Description of Relief Sought/ Disposition: To permit the petitioner to serve as a pilot in part 121 air carrier operations after his 60th birthday.

Docket No.: 27514.

Petitioner: John F. Hagerty.

Sections of the FAR Affected: 14 CFR 121.383(c).

Description of Relief Sought/ Disposition: To permit the petitioner to serve as a pilot in part 121 air carrier operations after this 60th birthday.

Docket No.: 27515.

Petitioner: Billy C. Leonard.

Sections of the FAR Affected: 14 CFR 121.383(c).

Description of Relief Sought/ Disposition: To permit the petitioner to serve as a pilot in part 121 air carrier operations after his 60th birthday.

Dispositions of Petitions

Docket No.: 23336.

Petitioner: Simulator Training, Inc.

Sections of the FAR Affected: 14 CFR 61.55(b)(2); 61.56(c)(1); 61.57 (c) and (d); 61.58 (c)(1) and (d); 61.63 (c)(2) and (d)(2) and (3); 61.67(d)(2); 61.157(d) (1) and (2) and (3) (1) and (2); and part 61, appendix A.

Description of Relief Sought/ Disposition: To permit STI to use FAA-approved simulators to meet certain training and testing requirements.

Grant, November 23, 1993, Exemption No. 5232C

Docket No.: 23495.

Petitioner: The Department of the Army.

Sections of the FAR Affected: 14 CFR 91.209 (a) and (b).

Description of Relief Sought/ Disposition: To permit helicopter night training operations to be conducted at an altitude of 500 feet above ground level (AGL), instead of the maximum height restriction of 200 feet AGL as now allowed.

Grant, November 23, 1993, Exemption No. 3946D

Docket No.: 25245.

Petitioner: The Department of the Air Force.

Sections of the FAR Affected: 14 CFR 91.215(b).

Description of Relief Sought: To allow certain United States Air Force aircraft to conduct flight operations in designated airspace above 10,000 feet mean sea level (MSL) without having to operate their transponders, subject to certain conditions and limitations.

Grant, November 19, 1993, Exemption No. 4633E.

Docket No.: 25624.

Petitioner: McDonnell Douglas Airplane Company.

Sections of the FAR Affected: 14 CFR 121.411(a) (2), (3) and (b)(2); 121.413 (b), (c), and (d); and part 121, Appendix H.

Description of Relief Sought: To allow part 121 certificate holders to contract for training provided by McDonnell Douglas.

Grant, November 11, 1993, Exemption No. 5117B.

Docket No.: 23921.

Petitioner: Flight Safety International.

Sections of the FAR Affected: 14 CFR 61.55(b)(2); 61.56(b)(1); 61.57 (c) and (d); 61.58(c)(1) and (d); 61.63(c)(2) and (d) (2) and (3); 61.67(d)(2); 61.157(d) (1) and (2) and (e) (1) and (2); and part 61, Appendix A.

Description of Relief Sought: To permit FlightSafety International (FSI), and persons who contract for services from FSI, to use FAA-approved simulators to meet certain training and testing requirements.

Grant, November 11, 1993, Exemption No. 5317C

Docket No.: 24256.

Petitioner: Dalfort Corporation.

Sections of the FAR Affected: 14 CFR 61.55(b)(2); 61.56(c)(1); 61.57 (c) and (d); 61.58(c)(1); 61.63 (c)(2) and (d)(2) and (3); 61.67(d)(2); 61.157 (d)(1) and (2) and (e)(1) and (2); and part 61, Appendix A.

Description of Relief Sought/ Disposition: To allow: (1) Certain in-flight checking requirements of part 61 of the FAR to be accomplished in FAA-approved simulators; (2) approval of Dalfort's Boeing 727–200, Boeing 747–200, and Douglas DC–8 simulators without meeting the certificate-holding requirement of 121.407; (3) the use of instructors who have not been employed by Dalfort for at least 1 year in the capacity of an instructor, pilot in command (PIC), or second in command (SIC) of an airplane of the same group in which they are instructing or checking and without its pilot instructors participating in an FAA-approved line flying program or line observation program; (4) Dalfort to conduct Phase II training for airline operators using Dalfort's approved training programs.

Grant, November 23, 1993, Exemption No. 4955D

Docket No.: 26029.

Petitioner: ABX Air Inc.

Sections of the FAR Affected: 14 CFR 121.505(a).

Description of Relief Sought: To amend Exemption No. 5167 to continue to allow the petitioner's two-member flight crews to complete any flight schedule which satisfies the requirements of the affected FAR before being provided at least 16 hours of rest and deleting the requirement that the exemption apply exclusively to transcontinental coast-to-coast flights that terminate in an eastern coastal state.

Partial Grant, December 3, 1993, Exemption No. 5167B

Docket No.: 27231.

Petitioner: Delta Air Lines, Inc.

Sections of the FAR Affected: 14 CFR 121.481 (b), (c), and (d).

Description of Relief Sought: To allow Delta pilots to comply with the flight time limitations in 121.481 (a), (e), and (f) and 121.483(b) instead of the flight time limitations in the affected sections.

Denial, November 19, 1993, Exemption No. 5795

Docket No.: 27362.

Petitioner: Ventura Air Services, Inc.

Sections of the FAR Affected: 14 CFR 91.511(a)(2), 135.165 (a) (1), (6), and (b) (6) and (7).

Description of Relief Sought: To allow Ventura Air Services, Inc. to operate its turbojet airplanes equipped with one high frequency communication system and one long range navigation system (LRNS).

Partial Grant, November 22, 1993, Exemption No. 5792

Docket No.: 27372.

Petitioner: Fly BVI.

Sections of the FAR Affected: 14 CFR 61.89(a)(5).

Description of Relief Sought: To allow Fly BVI student pilots to fly between Beef Island Airport, Tortola, in the British Virgin Islands and the airports of the U.S. Virgin Islands and Puerto Rico, while fulfilling the cross country requirements for their private pilot certificate.

Grant, November 11, 1993, Exemption No. 5796

Docket No.: 27386.

Petitioner: Seawind, S.N.A., Inc.

Sections of the FAR Affected: 14 CFR 45.25(h).

Description of Relief Sought: To allow the petitioner to display aircraft markings of a size other than that prescribed by the regulations.

Withdrawn, December 1, 1993

Docket No.: 27405, 27435.

Petitioner: British Airways & Air France.

Sections of the FAR Affected: 14 CFR 129.18(a).

Description of Relief Sought: To allow BA and AF to operate Concorde aircraft in the U.S. without installing a Traffic Alert and Collision Avoidance System II (TCAS II) until July 1, 1994.

Grant, November 30, 1993, Exemption No. 5798, 5799

Docket No.: 27443.

Petitioner: Translift Airways Limited.

Sections of the FAR Affected: November 22, 1993, 14 CFR 129.18(a).

Description of Relief Sought: To allow Translift to operate a McDonnell Douglas DC–8–71 (DC–8) aircraft in the U.S. without a Traffic Alert and Collision Avoidance System (TCAS) between December 30, 1993, and March 31, 1994.

Denial, December 3, 1993, Exemption No. 5802

Docket No.: 27463.

Petitioner: Private Jet Expeditions, Inc.

Sections of the FAR Affected: 14 CFR 121.358.

Description of Relief Sought: To extend the compliance date requiring installation of airborne windshear detection systems in three McDonnell Douglas DC–9–83 aircraft.

Denial, December 3, 1993, Exemption No. 5800

Docket No.: 27505.

Petitioner: Worldwide Airlines, Inc. d/b/a Leisure Air.

Sections of the FAR Affected: 14 CFR 121.358 (b) and (c).

Description of Relief Sought: To permit the petitioner to submit a request for approval of a retrofit schedule after the June 1, 1990, deadline to the Flight Standards Division Manager in the region of the certificate holding district office.

Partial Grant, December 3, 1993, Exemption No. 5801

Docket No.: 27526.

Petitioner: Viking International Airlines, Inc. d/b/a Eagle Airlines.

Sections of the FAR Affected: 14 CFR 121.358(c)(1).

Description of Relief Sought: To permit Viking to submit a request for approval of a retrofit schedule for installing windshear equipment after the June 1, 1990, deadline to the Flight Standards Division Manager in the region of the certificate holding district office.

Grant, November 22, 1993, Exemption No. 5794

[FR Doc. 93–30368 Filed 12–10–93; 8:45 a.m.]

BILLING CODE 4910–13–M

Intent To Rule on Application To Impose and Use the Revenue From a Passenger Facility Charge (PFC) at Metropolitan Oakland International Airport, Oakland, CA

AGENCY: Federal Aviation Administration (FAA), DOT.

ACTION: Notice of intent to rule on application.

SUMMARY: The FAA proposes to rule and invites public comment on the application to impose and use the revenue from a PFC at Metropolitan Oakland International Airport under the provisions of the Aviation Safety and Capacity Expansion Act of 1990 (Title IX of the Omnibus Budget Reconciliation Act of 1990) (Pub. L. 101–508) and part 158 of the Federal Aviation Regulations (14 CFR part 158).

DATES: Comments must be received on or before January 12, 1994.

ADDRESSES: Comments on this application may be mailed or delivered in triplicate to the FAA at the following address:

Federal Aviation Administration, Airports Division, 15000 Aviation Blvd, Lawndale, CA. 90261, or

San Francisco Airports District Office, 831 Mitten Road, room 210, Burlingame, CA. 94010–1303.

In addition, one copy of any comments submitted to the FAA must be mailed or delivered to Mr. Charles R. Roberts, Executive Director of the Port of Oakland, at the following address: Post Office Box 2064, Oakland, California 94604–2064.

Air carriers and foreign air carriers may submit copies of written comments previously provided to the Port of Oakland under § 158.23 of part 158.

FOR FURTHER INFORMATION CONTACT: Mr. Joseph R. Rodriguez, Supervisor, Planning and Programming Section, Airports, District Office, 831 Mitten Road, room 210, Burlingame, CA. 94010–1303, Telephone: (415) 876–2805. The application may be reviewed in person at this same location.

SUPPLEMENTARY INFORMATION: The FAA proposes to rule and invites public comment on the application to impose and use the revenue from Metropolitan Oakland International Airport under the provisions of the Aviation Safety and Capacity Expansion Act of 1990 (Title IX of the Omnibus Budget Reconciliation Act of 1990) (Pub. L. 101–508) and part 158 of the Federal Aviation Regulations (14 CFR part 158).

On November 24, 1993, the FAA determined that the application to impose and use a PFC submitted by the Port of Oakland was substantially complete within the requirements of § 158.25 of part 158. The FAA will approve or disapproiate the application, in whole or in part, no later than February 24, 1994.

The following is a brief overview of the application.

Level of proposed PFC: $3.00

Proposed charge effective date: June 1, 1994

Proposed charge expiration date: April 30, 1995

5Total estimated PFC revenue: $9,239,000.00

Brief description of the proposed projects:

General Terminal Improvements in M101, Upgrade and Apply Ramp Sealer - Phase II, Install Security System at Runway 11 End of Dike, Relocate and Improve Taxiway 2, Overlay Airport Drive Phase III, Install Two Replacement Current Regulators, Upgrade Airport Fire Alarm System, Improvements to Earhart Road, Planning/Environmental Study for Runway Extension, Airport Signage and Access Planning Study, Land Records Management Update, In-Water ARFF Rescue, and AAAE Interactive Training.

Class or classes of air carriers which the public agency has requested not be required to collect PFCs: Air Taxi/Commercial Operators (ATCO) filing FAA Form 1800–31.

Any person may inspect the application in person at the FAA office listed above under **FOR FURTHER**

INFORMATION CONTACT and at the FAA Regional Airports Division located at: Federal Aviation Administration, Airports Division, 15000 Aviation Blvd, Lawndale, CA 90261.

In addition, any person may, upon request, inspect the application, notice, and other documents germane to the application in person at the Port of Oakland.

Issued in Hawthorne, California, on November 24, 1993.

Herman C. Bliss,

Western-Pacific Region, Manager, Airports Division.

[FR Doc. 93–30369 Filed 12–10–93; 8:45 am]

BILLING CODE 4910–13–M

Intent To Rule on Application To Impose and Use the Revenue From a Passenger Facility Charge (PFC) at Richmond International Airport, Richmond, VA

AGENCY: Federal Aviation Administration (FAA), DOT.

ACTION: Notice of intent to rule on application.

SUMMARY: The FAA proposes to rule and invites public comment on the application to impose and use the revenue from a PFC at Richmond International Airport under the provisions of the Aviation Safety and Capacity Expansion Act of 1990 (Title IX of the Omnibus Budget Reconciliation Act of 1990) (Pub. L. 101–508) and part 158 of the Federal Aviation Regulations (14 CFR part 158).

DATES: Comments must be received on or before January 12, 1994.

ADDRESSES: Comments on this application may be mailed or delivered in triplicate to the FAA at the following address: Washington Airports District Office, 101 West Broad Street, Suite 300, Falls Church, Virginia 22046.

In addition, one copy of any comments submitted to the FAA must be mailed or delivered to Mr. David L. Blackshear, Executive Director of the Capital Region Airport Commission, at the following address: Richmond International Airport, Box A–3, Richmond, Virginia 23231–5999.

Air carriers and foreign air carriers may submit copies of written comments previously provided to the Capital Region Airport Commission under § 158.23 of part 158.

FOR FURTHER INFORMATION CONTACT: Robert Mendez, Manager, Washington Airports District Office, 101, West Broad Street, Suite 300, Falls Church, Virginia 22046. The application may be reviewed in person at this same location.

SUPPLEMENTARY INFORMATION: The FAA proposes to rule and invites public comment on the application to impose and use the revenue from a PFC at Richmond International Airport under the provisions of the Aviation Safety and Capacity Expansion Act of 1990 (Title IX of the Omnibus Budget Reconciliation Act of 1990) (Pub. L. 101–508) and part 158 of the Federal Aviation Regulations (14 CFR part 158).

On October 27, 1993, the FAA determined that the application to impose and use the revenue from a PFC submitted by Capital Region Airport Commission was substantially complete within the requirements of § 158.25 of part 158. The FAA will approve or disapprove the application, in whole or in part, no later than February 3, 1994.

The following is a brief overview of the application.

Level of the proposed PFC: $3.00
Proposed charge effective date: April 1, 1994
Proposed charge expiration date: January 1, 2006
Total estimated PFC revenue: $32,435,337
Brief description of proposed project(s):
—Purchase Snow Displacement Equipment
—Overlay Runway 16/34 and overruns
—Overlay Taxiway "R"
—Construct Service Road
—Conduct Master Plan Study
—Purchase ARFF Vehicle
—Engineering For Cargo Apron Expansion
—Access Control System
—Airfield Guidance signs
—Wetland Delineation
—Expand Terminal Apron
—Mid-field Taxiway & North Extension "L"
—Snow Removal Trucks
—Rehabilitate Taxiway "A" North
—Construct New Partial Parallel Taxiway "A" North
—Rehabilitate Taxiway "F" and Extend "A" To Runway 2/20
—Rehabilitate Taxiway "S"
—Terminal Area Drainage Improvements
—Airfield Drainage Improvements

Class or classes of air carriers which the public agency has requested not be required to collect PFCs: On demand Air Taxi/commercial operators FAR part 135 operator.

Any person may inspect the application in person at the FAA office listed above under **FOR FURTHER INFORMATION CONTACT** and at the FAA regional Airports office located at: Fitzgerald Federal Building, John F. Kennedy International Airport, Jamaica, New York 11430.

In addition, any person may, upon request, inspect the application, notice and other documents germane to the application in person at Capital Region Airport Commission Airport.

Issued in New York City, New York, on December 1, 1993.

Louis P. DeRose,

Manager, Airports Division, Eastern Region.

[FR Doc. 93–30370 Filed 12–10–93; 8:45 am]

BILLING CODE 4910–13–M

Research and Special Programs Administration

[Docket No. PDA–13(R)]

Application by Chemical Waste Transportation Institute for a Preemption Determination as to New York Department of Environmental Conservation Requirements on the Transfer and Storage of Hazardous Wastes Incidental to Transportation

AGENCY: Research and Special Programs Administration (RSPA), DOT.

ACTION: Revision and Extension of Period for Public Comment.

SUMMARY: RSPA is granting the requests of four States to extend the comment period to allow the submission of further comments and information on the application by Chemical Waste Transportation Institute for a determination that the HMTA preempts certain requirements of the New York Department of Environmental Conservation (NYDEC) on the transfer and storage of hazardous wastes incidental to transportation. The period for rebuttal comments is also extended to permit interested parties an opportunity to respond to all comments submitted during the extended initial comment period, including any further submissions by these four States.

DATES: Further comments received on or before January 21, 1994, and rebuttal comments received on or before March 7, 1994, will be considered before an administrative ruling is issued by RSPA's Associate Administrator for Hazardous Materials Safety. Rebuttal comments may discuss only those issues raised by comments received during the initial comment period and may not discuss new issues.

ADDRESSES: The application and any comments received may be reviewed in the Dockets Unit, Research and Special Programs Administration, room 8421, Nassif Building, 400 Seventh Street, SW., Washington, DC 20590–0001 (Tel. No. 202–366–4453). Comments and rebuttal comments on the application may be submitted to the Dockets Unit at

the above address, and should include the Docket Number (PDA–13(R)). Three copies of each should be submitted. In addition, a copy of each comment and each rebuttal comment must also be sent to (1) Mr. Stephen C. Hansen, Chairman, Chemical Waste Transportation Institute, 1730 Rhode Island Avenue, NW., Suite 1000, Washington, DC 20036, and (2) Mr. Thomas C. Jorling, Commissioner, New York Department of Environmental Conservation, 50 Wolf Road, Albany, NY 12233. A certification that a copy has been sent to these persons must also be included with the comment. (The following format is suggested: "I hereby certify that copies of this comment have been sent to Messrs. Hansen and Jorling at the addresses specified in the **Federal Register**.")

FOR FURTHER INFORMATION CONTACT: Frazer C. Hilder, Office of the Chief Counsel, Research and Special Programs Administration, U.S. Department of Transportation, Washington, DC 20590–0001 (Tel. No. 202–366–4400).

SUPPLEMENTARY INFORMATION:

I. Background

On September 27, 1993, CWTI applied for a determination that the HMTA preempts certain NYDEC requirements in Title 6 of the New York Codes, Rules and Regulations (NYCRR), governing the transfer and storage of hazardous wastes incidental to transportation (hereinafter "NYDEC transfer and storage requirements"). The text of CWTI's application was published in the **Federal Register** on October 15, 1993, and interested parties were invited to submit comments by November 24, 1993, and rebuttal comments by January 14, 1994. Public Notice and Invitation to Comment, 58 FR 53614 (Oct. 15, 1993).

In its comments with a November 23, 1993 letter, NYDEC has stated that CWTI's application

> identifies nine specific regulations respecting hazardous waste management wherein hazardous wastes are currently regulated more stringently by New York State that at the Federal level. Of these nine regulations, all but one is proposed to be eliminated in draft regulations under the Part 370 series of Title 6 of the New York Code of Rules and Regulations (NYCRR). This rulemaking effort was initiated in September 1992, and will likely be completed near the end of 1994.

NYDEC has requested permission to file a copy of the draft regulations "once such draft rules are filed with the Secretary of State," which it anticipates will be by mid-January 1994 (the expiration of the period originally set for submission of rebuttal comments). NYDEC has also requested an opportunity to address comments to the current regulations that are proposed to be eliminated, if DOT intends to issue a ruling "on the entirety of CWTI's petition." While the comments of two private concerns indicate that NYDEC may not be enforcing all of the current regulations, NYDEC did not discuss the manner in which the current regulations are presently enforced and applied.

In addition, NYDEC has contended that, although CWTI's application seeks a determination that the HMTA preempts the secondary containment requirement in 6 NYCRR 373–1.1(d)(1)(xv)(c)(1), CWTI has not challenged a similar requirement in 6 NYCRR 373–1.1(d)(1)(xv)(i). NYDEC argued that CWTI may not "expand the scope of [its] petition" and is "estopped from challenging the secondary containment requirement found in 373–1.1(d)(1)(xv)(i)," but it then proceeded to discuss why it believed that requirement was not preempted by the HMTA.

Three other States have also expressed a desire to submit additional comments on CWTI's application, either explicitly or in their contention that the time originally allowed for comments was inadequate. In a brief statement submitted on November 24, 1993, the Massachusetts Department of Environmental Protection stated that it intends "to supplement its comments on this preemption application shortly and at that time will outline further its concerns that the New York regulations are not an obstacle to transportation but actually further the goals of HMTA."

Maryland and Pennsylvania have stated that their comments, under cover of a November 23, 1993 letter, are "by no means comprehensive, given the short time-frame involved." According to these States, "DOT apparently truncated the usual 45 day comment period," by providing that initial comments were due on the day before the Thanksgiving holiday, rather than the Monday after the Thanksgiving weekend. These two States also comment that they "only became aware of this filing on November 15," a full month after CWTI's application was published in the **Federal Register**.

II. Extension of Comment Periods

The initial comment period is hereby extended until January 21, 1994, in order to provide all interested parties, including these four States, ample opportunity to submit comments on this matter. This period of more than three months from the publication of CWTI's application in the **Federal Register** should allow all parties sufficient time to submit any comments they deem relevant and material concerning the NYDEC transfer and storage requirements. All parties submitting comments are encouraged to fully develop all positions and arguments in their initial comments, so that new contentions will not appear, for the first time, in rebuttal comments or in petitions for reconsideration.

RSPA grants NYDEC's request to submit a copy of the "draft regulations" which are intended to eliminate many of the specific requirements which CWTI's application asks RSPA to find preempted by the HMTA. NYDEC is also invited to address, in further comments, the following matters:

(1) The scope and history of all revisions to 6 NYCRR Parts 364, 370, 372 and 373 proposed since "[t]his rulemaking effort was initiated in September of 1992," as well as the status of such revisions as of the date NYDEC submits further comments (in this regard, NYDEC may submit with its comments copies of any materials published or publicly available since September 1992 that describe or explain the proposed revisions);

(2) Whether any regulations proposed to be eliminated are presently being enforced or will be enforced during the period before the "draft regulations" take effect;

(3) The present effect on hazardous waste transporters of the regulations proposed to be eliminated, in the context that these regulations are, or are not, being enforced; and

(4) Whether NYDEC contends it will be prejudiced if RSPA considers whether the HMTA preempts the secondary containment requirement in 6 NYCRR 373–1.1(d)(1)(xv)(i).

CWTI may supplement its application to discuss the differences, if any, between the secondary containment requirement in 6 NYCRR 373–1.1(d)(1)(xv)(c)(1) and that in 6 NYCRR 373–1.1(d)(1)(xv)(i), and whether both of these provisions are challenged in CWTI's application.

To allow interested parties an opportunity to respond to any further comments submitted, the period for rebuttal comments is hereby extended until March 7, 1994. Rebuttal comments may discuss only those issues raised by comments received during the initial comment period, now extended until January 21, 1994, and may not discuss new issues.

All comments should be limited to the issue of whether the NYDEC transfer and storage requirements are preempted by the HMTA. As stated in the October 15, 1993 Public Notice, all comments should:

(1) Specifically address (a) the preemption criteria ("substantively the same," "dual compliance," and "obstacle") described in Part I of the October 15, 1993 Public Notice, and (b) whether the NYDEC transfer and storage requirements are "otherwise authorized by Federal law";

(2) Set forth in detail the manner in which the NYDEC transfer and storage requirements are applied and enforced; and

(3) Discuss the definitions of "Storage Incidental to Transport" and "Transfer Incidental to Transport" in 6 NYCRR 364.1(c), including whether these definitions impose requirements on transporters of hazardous waste in New York and whether these definitions apply to the NYDEC transfer and storage requirements in 6 NYCRR Parts 372 and 373. Persons intending to comment should review the standards and procedures governing RSPA's consideration of applications for preemption determinations, set forth at 49 CFR 107.201–107.211.

Issued in Washington, DC, on December 6, 1993.

Alan I. Roberts,

Associate Administrator for Hazardous Materials Safety.

[FR Doc. 93–30303 Filed 12–10–93; 8:45 am]

BILLING CODE 4910–60–P

DEPARTMENT OF THE TREASURY

Public Information Collection Requirements Submitted to OMB for Review

December 3, 1993.

The Department of Treasury has submitted the following public information collection requirement(s) to OMB for review and clearance under the Paperwork Reduction Act of 1980, Public Law 96–511. Copies of the submission(s) may be obtained by calling the Treasury Bureau Clearance Officer listed. Comments regarding this information collection should be addressed to the OMB reviewer listed and to the Treasury Department Clearance Officer, Department of the Treasury, room 3171 Treasury Annex, 1500 Pennsylvania Avenue, NW., Washington, DC 20220.

SPECIAL REQUEST: The information being requested on the form described below was developed to implement President Clinton's memorandum of August 11, 1993 addressed to the Secretary of the Treasury. In particular, the form will implement objectives that are stated in the memorandum. The form is being submitted in draft because it is in the process of final composition. Therefore, the Department of the Treasury, on behalf of the Bureau of Alcohol, Tobacco and Firearms, is requesting Office of Management and Budget (OMB) review and approval by December 23, 1993. All comments must be received by close of business December 16, 1993.

Bureau of Alcohol, Tobacco and Firearms

OMB Number: New
Form Numbers: ATF F 5300.34
Type of Review: New collection
Title: Questionnaire for Responsible Persons
Description: This form is used by the public when applying for a Federal firearms license as a dealer, importer or manufacturer. The information requested on the form establishes eligibility for the license. It is also used when responsible persons are added to an existing license.
Respondents: Individuals or households, businesses or other for-profit, small businesses or organizations
Estimated Number of Respondents: 30,000
Estimated Burden Hours Per Respondent: 30 minutes
Frequency of Response: On occasion
Estimated Total Reporting Burden: 15,000 hours
Clearance Officer: Robert N. Hogarth (202) 927–8930, Bureau of Alcohol, Tobacco and Firearms, room 3200, 650 Massachusetts Avenue, NW., Washington, DC 20226.
OMB Reviewer: Milo Sunderhauf (202) 395–6880, Office of Management and Budget, room 3001, New Executive Office Building, Washington, DC 20503.

Lois K. Holland,

Departmental Reports Management Officer

Billing Code 4830–01–P

DEPARTMENT OF THE TREASURY
BUREAU OF ALCOHOL, TOBACCO AND FIREARMS
QUESTIONNAIRE FOR RESPONSIBLE PERSONS
(Complete in Triplicate)

1. NAME ( ) *(Last, first, middle)*

2. SOCIAL SECURITY NUMBER ( )

3. BIRTHPLACE ( ) *(City & State)*

4. DATE OF BIRTH ( )

5. ALIASES ( )

6. TELEPHONE NUMBER ( )

7. PRESENT ADDRESS ( ) *(No., street, city, State & Zip Code)*

8. RACE

☐ BLACK ☐ AMERICAN INDIAN OR ALASKAN NATIVE

☐ WHITE ☐ ASIAN OR PACIFIC ISLANDER

9. DESCRIPTION

SEX	HEIGHT	WEIGHT	HAIR COLOR	EYE COLOR

10. ALL DRIVER'S LICENSE NUMBERS

11. RESIDENCES DURING PAST TEN YEARS *(In columns (b) and (c) enter the month and year of residence.)*

ADDRESS *(Number, street, city, State, Zip Code)* (a)	FROM (b)	TO (c)

12. ARE YOU A CITIZEN OF THE UNITED STATES YES ☐ NO ☐

IF YOU ARE A NATURALIZED CITIZEN, SPECIFY DATE AND PLACE OF NATURALIZATION.

IF YOU ARE NOT A CITIZEN OF THE UNITED STATES, SPECIFY THE DATE AND PLACE YOU ENTERED THE UNITED STATES AND YOUR IMMIGRATION STATUS ON THAT DATE.

13. CONVICTIONS *(If pardoned for a conviction, write "yes" in column (e) and attach a copy of the pardon.)*

SPECIFIC CRIME (a)	NAME AND LOCATION OF COURT (b)	SENTENCE RECEIVED (c)	CONVICTION DATE (d)	PARDONED (e)

14. OTHER ARRESTS

CHARGE (a)	DATE AND PLACE OF ARREST (b)	DISPOSITION (c)

15. PROBATION OFFICER'S NAME, ADDRESS AND TELEPHONE NO.

16. PAROLE OFFICER'S NAME, ADDRESS AND TELEPHONE NO.

ATF F 5300.34 ( )

17. APPLICANT DATA *(All questions must be answered by a "YES" or "NO".)*

	YES	NO
(a) ARE YOU A FUGITIVE FROM JUSTICE?		
(b) ARE YOU AN UNLAWFUL USER OF OR ADDICTED TO MARIJUANA, ANY DEPRESSANT OR STIMULATING DRUG, OR ANY NARCOTIC DRUG?		
(c) HAVE YOU EVER RENOUNCED YOUR UNITED STATES CITIZENSHIP?		
(d) ARE YOU AN ALIEN ILLEGALLY IN THE UNITED STATES?		
(e) HAVE YOU EVER BEEN ADJUDICATED AS A MENTAL DEFECTIVE?		
(f) HAVE YOU EVER BEEN COMMITTED TO A MENTAL INSTITUTION?		
(g) HAVE YOU EVER BEEN ADJUDGED BY A COURT OF BEING MENTALLY INCOMPETENT?		
(h) ARE YOU NOW ON PROBATION OR PAROLE?		
(i) HAVE YOU EVER BEEN DISCHARGED FROM THE ARMED FORCES UNDER DISHONORABLE CONDITIONS?		
(k) ARE YOU NOW UNDER INDICTMENT OR INFORMATION IN ANY COURT FOR A CRIME PUNISHABLE BY IMPRISONMENT FOR A TERM EXCEEDING ONE YEAR? *(If "YES" show date, court, charges and current status.)*	☐	☐

18. HAVE YOU EVER APPLIED FOR A FEDERAL FIREARM LICENSE? *(If "YES" show date, and with whom filed.)* YES ☐ NO ☐

(j) HAVE YOU SERVED ON ACTIVE DUTY IN THE ARMED FORCES? *(If "YES" check Branch and complete following.)* YES ☐ NO ☐

☐ ARMY ☐ NAVY ☐ MARINES ☐ COAST GUARD

SERVICE SERIAL NUMBER	DATE ENTERED ACTIVE DUTY
KIND OF DISCHARGE	DATE OF DISCHARGE

PHOTOGRAPH

Affix 2" x 2" photograph here

1. Photo must have been taken within last six months.
2. Photo must show a full front view of the applicant with bare head.
3. The distance from the top of the head to the point of the chin is to be approximately 1-¼ inches.

21. COMPLETE THIS ITEM ONLY IF APPLICANT WAS EVER ISSUED A FEDERAL FIREARM LICENSE

BUSINESS NAME AND ADDRESS (LICENSE/PERMIT ISSUED UNDER)	LICENSE NUMBER	EXPIRATION DATE OF LATEST LICENSE

THE BUSINESS IS *(Check one)*

☐ INDIVIDUALLY OWNED ☐ A PARTNERSHIP ☐ A CORPORATION ☐ OTHER *(Specify)*

UNDER PENALTIES IMPOSED BY 18 U.S.C. 924, I DECLARE THAT I HAVE EXAMINED THE ENTRIES IN THIS APPLICATION AND, TO THE BEST OF MY KNOWLEDGE AND BELIEF, THEY ARE TRUE, CORRECT AND COMPLETE.

19. SIGNATURE OF APPLICANT	20. DATE

NOTE: A COMPLETED FD 258 (FINGERPRINT IDENTIFICATION CARD) MUST ACCOMPANY THIS APPLICATION

MAIL APPLICATION FORM TO: BUREAU OF ALCOHOL, TOBACCO AND FIREARMS
P.O. BOX 845219
DALLAS, TX 75284-5219

ATF F 5300.34 ( )

INSTRUCTION SHEET FOR QUESTIONNAIRE FOR RESPONSIBLE PERSONS

1. This form must accompany all submissions of an Application For License, Under 18 U.S.C. Chapter 44, Firearms, ATF F 7 (5310.12). It must be executed by all responsible persons as defined in item 2 of these instructions. This form will also be used to report any change in responsible persons occurring during the term of a Federal firearms license. It must be noted that a new sole proprietor must file an ATF F 7 and cannot be engaged in business until the new license is issued.

2. IN ADDITION TO A SOLE PROPRIETOR, A RESPONSIBLE PERSON IS:

   a. In the case of a corporation, partnership, or association, any individual possessing, directly or indirectly, the power to direct or cause the direction of the management, policies, and practices of the corporation, partnership, or association, insofar as they pertain to firearms: and,

   b. In the case of a corporation, association, or similar organization, any person owning ten percent or more of the outstanding shares of stock issued by the applicant: and, the officers and directors thereof.

3. If additional space is needed to respond to any question or request for information, use a separate sheet making sure that you number the question or item to which you are responding.

4. Item 17: Give full details on separate sheet for all "yes" answers to these questions.

PRIVACY ACT INFORMATION

The following information is provided pursuant to Section 3 of the Privacy Act of 1974 (5 U.S.C. §552a(e)(3)):

1. **AUTHORITY:** Solicitation of this information is authorized pursuant to 18 U.S.C. §923(a) of the Gun Control Act of 1968. Disclosure of this information is mandatory, if the applicant wishes to obtain a Federal firearms license.

2. **PURPOSE:** To determine the eligibility of the applicant to obtain a firearms license, to determine the ownership of the business, the type of firearms or ammunition to be dealt in, the business hours, the business history and the identity of the responsible person in the business.

3. **ROUTINE USES:** The information will be used by ATF to make determinations set forth in paragraph 2. In addition, information may be disclosed to other Federal, State, foreign and local law enforcement and regulatory agency personnel to verify information on the application and to aid in the performance of their duties with respect to the enforcement and regulation of firearms and/or ammunition where such disclosure is not prohibited by law. The information may further be disclosed to the Justice Department if it appears that the furnishing of false information may constitute a violation of Federal law. Finally, the information may be disclosed to members of the public in order to verify the information on the application when such disclosure is not prohibited by law.

4. **EFFECTS OF NOT SUPPLYING INFORMATION REQUESTED:** Failure to supply complete information will delay processing and may result in denial of the application.

The following information is provided pursuant to Section 7(b) of the Privacy Act of 1974:

Disclosure of the individual's social security number is voluntary. Under 18 U.S.C. §923(a), ATF has the authority to solicit this information. The number may be be used to verify the individual's identity.

PAPERWORK REDUCTION ACT NOTICE

This request is in accordance with the Paperwork Reduction Act of 1980. The information collection is used to determine the eligibility of the applicant to engage in certain operations, to determine location and extent of operations, and to determine whether the operations will be in conformity with Federal laws and regulations. The information requested is required to obtain or retain in a benefit and is mandatory by statute (18 U.S.C. 923).

The estimated average burden associated with this collection is 30 minutes per respondent or recordkeeper, depending on individual circumstances. Comments concerning the accuracy of this burden estimate and suggestions for reducing this burden should be directed to Reports Management Officer, Information Programs Branch, Room 3450, Bureau of Alcohol, Tobacco and Firearms, 650 Massachusetts Avenue, N.W., Washington D.C., 20226, or the Office of Management and Budget, Paperwork Reduction Project (1512-0042), Washington, D.C., 20503.

NAME OF APPLICANT *(Include last, first, and middle name and all aliases used)*	DATE OF BIRTH

PRESENT ADDRESS *(Number, street, city, State and Zip Code)*	TELEPHONE NUMBER *(Include area code)*

This release, when presented by a duly authorized representative of the Department of the Treasury, will constitute my consent and authority to examine and obtain copies and abstracts of records and to receive statements and information regarding my background. Specifically, I hereby authorized the release of the following data or records to the Department of the Treasury (BATF):

EMPLOYMENT INFORMATION, MILITARY INFORMATION/RECORDS, MEDICAL INFORMATION/RECORDS POLICE AND CRIMINAL RECORDS

SIGNATURE OF APPLICANT	DATE

ATF F 5300.34 ( )

[FR Doc. 93–30182 Filed 12–10–93; 8:45 am]
BILLING CODE 4810–31–C

Public Information Collection Requirements Submitted to OMB for Review

December 3, 1993.

The Department of Treasury has submitted the following public information collection requirement(s) to OMB for review and clearance under the Paperwork Reduction Act of 1980, Public Law 96–511. Copies of the submission(s) may be obtained by calling the Treasury Bureau Clearance Officer listed. Comments regarding this information collection should be addressed to the OMB reviewer listed and to the Treasury Department Clearance Officer, Department of the Treasury, room 3171 Treasury Annex, 1500 Pennsylvania Avenue, NW., Washington, DC 20220.

U.S. Customs Service

OMB Number: 1515–0093

Form Number: CF 300

Type of Review: Extension

Title: Bonded Warehouse Proprietor's Submission

Description: CF 300 is prepared by bonded warehouse proprietor's and submitted to the Customs Service annually. The document reflects all bonded merchandise entering, released and manipulated. This includes beginning and ending inventories

Respondents: Businesses or other for-profit

Estimated Number of Respondents/ Recordkeepers: 1,403

Estimated Burden Hours Per Respondent/Recordkeeper:

Frequency of Response: Annually

Estimated Total Reporting/ Recordkeeping Burden: 185,757 hours

Clearance Officer: Ralph Meyer (202) 927–1552, U.S. Customs Service, Paperwork Management Branch, room 6316, 1301 Constitution Avenue, NW., Washington, DC 20229

OMB Reviewer: Milo Sunderhauf (202) 395–6880, Office of Management and Budget, room 3001, New Executive Office Building, Washington, DC 20503

Lois K. Holland,

Departmental Reports Management Officer.

[FR Doc. 93–30183 Filed 12–10–93; 8:45 am]
BILLING CODE 4820–02–P

Public Information Collection Requirements Submitted to OMB for Review

December 3, 1993.

The Department of the Treasury has submitted the following public information collection requirement(s) to OMB for review and clearance under the Paperwork Reduction Act of 1980, Public Law 96–511. Copies of the submission(s) may be obtained by calling the Treasury Bureau Clearance Officer listed. Comments regarding this information collection should be addressed to the OMB reviewer listed and to the Treasury Department Clearance Officer, Department of the Treasury, room 3171 Treasury Annex, 1500 Pennsylvania Avenue, NW., Washington, DC 20220.

Internal Revenue Service

OMB Number: 1545–0916

Regulation ID Numbers: EE–63–84 TEMP and EE–96–85 NPRM

Type of Review: Extension

Title: Effective Dates and Other Issues Arising Under the Employee Benefit Provisions of the Tax Reform Act of 1984

Description: These temporary regulations provide rules relating to effective dates and other issues arising under sections 91, 223 and 511–561 of the Tax Reform Act of 1984

Respondents: Individual or households, farms, businesses or other for-profit, non-profit institutions

Estimated Number of Respondents: 12,800

Estimated Burden Hours Per Respondent: 3 hours, 27 minutes

Frequency of Response: On occasion

Estimated Total Reporting Burden: 6,500 hours

Clearance Officer: Garrick Shear (202) 622–3869, Internal Revenue Service, room 5571, 1111 Constitution Avenue, NW., Washington, DC 20224

OMB Reviewer: Milo Sunderhauf (202) 395–6880, Office of Management and Budget, room 3001, New Executive Office Building, Washington, DC 20503

Lois K. Holland,

Departmental Reports Management Officer.

[FR Doc. 93–30184 Filed 12–10–93; 8:45 am]
BILLING CODE 4830–01–P

Public Information Collection Requirements Submitted to OMB for Review

December 3, 1993.

The Department of the Treasury has submitted the following public information collection requirement(s) to OMB for review and clearance under the Paperwork Reduction Act of 1980, Public Law 96–511. Copies of the submission(s) may be obtained by calling the Treasury Bureau Clearance Officer listed. Comments regarding this information collection should be addressed to the OMB reviewer listed and to the Treasury Department Clearance Officer, Department of the Treasury, room 3171 Treasury Annex, 1500 Pennsylvania Avenue, NW., Washington, DC 20220.

Bureau of Alcohol, Tobacco and Firearms

OMB Number: 1512–0206

Form Numbers: ATF REC 5110/08 and ATF F 5110.41

Type of Review: Extension

Title: Application, Miscellaneous Requests and Notices for Distilled Spirits Plants

Description: The information provided by applicants assists ATF in determining eligibility and providing for registration. These eligibility requirements are for persons who wish to establish distilled spirits plants operations. However, both statutes and regulations allow for variances from the regulations and this information provides data to permit a variance

Respondents: Businesses or other for-profit, small businesses or organizations

Estimated Number of Respondents: 291

Estimated Burden Hours Per Respondent: 2 hours

Frequency of Response: On occasion

Estimated Total Reporting Burden: 1,596 hours

Clearance Officer: Robert N. Hogarth (202) 927–8930, Bureau of Alcohol, Tobacco and Firearms, room 3200, 650 Massachusetts Avenue, NW., Washington, DC 20226

OMB Reviewer: Milo Sunderhauf (202) 395–6880, Office of Management and Budget, room 3001, New Executive Office Building, Washington, DC 20503

Lois K. Holland,

Departmental Reports Management Officer.

[FR Doc. 93–30185 Filed 12–10–93; 8:45 am]
BILLING CODE 4810–31–P

Public Information Collection Requirements Submitted to OMB for Review.

December 3, 1993.

The Department of Treasury has submitted the following public information collection requirement(s) to OMB for review and clearance under the Paperwork Reduction Act of 1980,

Public Law 96–511. Copies of the submission(s) may be obtained by calling the Treasury Bureau Clearance Officer listed. Comments regarding this information collection should be addressed to the OMB reviewer listed and to the Treasury Department Clearance Officer, Department of the Treasury, Room 3171 Treasury Annex, 1500 Pennsylvania Avenue, NW., Washington, DC 20220.

Comptroller of the Currency

OMB Number: 1557–0184
Form Number: MSD, MSD-W, MSD–4, MSD–5, G–FIN, G–FIN–W, G–FIN–4, and G–FIN–5
Type of Review: Revision
Title: (MA)—Municipal and Government Securities Broker/Dealer Registration and Withdrawal
Description: The Government Securities Act of 1986 requires all financial institutions that act as government securities brokers and dealers to notify designated Federal regulatory agencies of their broker/dealer activities, unless exempted from the notice requirements by Treasury Department regulations. These forms are developed to meet the requirements of the act
Respondents: Businesses or other for-profit
Estimated Number of Respondents: 150
Estimated Burden Hours Per Respondent: 48 minutes
Frequency of Response: On occasion
Estimated Total Recordkeeping Burden: 6,247 hours
Clearance Officer: John Ference (202) 874–4697, Comptroller of the Currency, 250 E Street, SW., Washington, DC 20219
OMB Reviewer: Gary Waxman (202) 395–7340, Office of Management and Budget, room 3208, New Executive Office Building, Washington, DC 20503

Lois K. Holland,

Departmental Reports Management Officer.

[FR Doc. 93–30186 Filed 12–10–93; 8:45 am]

BILLING CODE 4810–33–P

Public Information Collection Requirements Submitted to OMB for Review.

December 3, 1993.

The Department of Treasury has submitted the following public information collection requirement(s) to OMB for review and clearance under the Paperwork Reduction Act of 1980, Public Law 96–511. Copies of the submission(s) may be obtained by calling the Treasury Bureau Clearance Officer listed. Comments regarding this information collection should be addressed to the OMB reviewer listed and to the Treasury Department Clearance Officer, Department of the Treasury, room 3171 Treasury Annex, 1500 Pennsylvania Avenue, NW., Washington, DC 20220.

Bureau of the Public Debt

OMB Number: 1535–0052
Form Number: PD F 1011
Type of Review: Extension
Title: Resolution Authorizing (1) Disposition of Securities Held by Organization, and (2) Execution and Delivery of Bonds Indemnity
Description: PD F 1011 is used by an organization to dispose of registered United States security and/or execute bonds of indemnity
Respondents: Individuals or households, businesses or other for-profit, non-profit institutions
Estimated Number of Respondents: 485
Estimated Burden Hours Per Response: 30 minutes
Frequency of Response: On occasion
Estimated Total Reporting Burden: 243 hours
Clearance Officer: Vicki S. Ott (304) 420–6553, Bureau of the Public Debt, 200 Third Street, Parkersburg, West VA 26106–1328
OMB Reviewer: Milo Sunderhauf (202) 395–6880, Office of Management and Budget, Room 3001, New Executive Office Building, Washington, DC 20503

Lois K. Holland,

Departmental Reports Management Officer.

[FR Doc. 93–30187 Filed 12–10–93; 8:45 am]

BILLING CODE 4810–40–P

Public Information Collection Requirements Submitted to OMB for Review

December 1, 1993.

The Department of Treasury has submitted the following public information collection requirement(s) to OMB for review and clearance under the Paperwork Reduction Act of 1980, Public Law 96–511. Copies of the submission(s) may be obtained by calling the Treasury Bureau Clearance Officer listed. Comments regarding this information collection should be addressed to the OMB reviewer listed and to the Treasury Department Clearance Officer, Department of the Treasury, room 3171 Treasury Annex, 1500 Pennsylvania Avenue, NW., Washington, DC 20220.

Bureau of Alcohol, Tobacco and Firearms

OMB Number: 1512–0192
Form Numbers: ATF REC 5110/02 and ATF F 5110.11
Type of Review: Extension
Title: Distilled Spirits Plants Warehousing Records and Reports
Description: The information collected is used to account for proprietor's tax liability, adequacy of bond coverage and protection of the revenue. The information also provides data to analyze trends audit plant operations, monitor industry activities and compliance to provide for efficient allocation of field personnel plus provide for economic analysis
Respondents: Businesses or other for-profit, small businesses or organizations
Estimated Number of Respondents/ Recordkeepers: 236
Estimated Burden Hours Per Respondent/Recordkeeper: 2 hours
Frequency of Response: Monthly
Estimated Total Reporting/ Recordkeeping Burden: 5,664 hours
OMB Number: 1512–0205
Form Numbers: ATF REC 5110/01 and ATF F 5110.40
Type of Review: Extension
Title: Distilled Spirits Records (ATF REC 5110/01) Monthly Report of Production Operations (ATF F 5110.40)
Description: The information collected is used to account for proprietor's tax liability, adequacy of bond coverage and protection of the revenue. The information also provides data to analyze trends in the industry, and plan efficient allocation of field resources, audit plant operations and compilation of statistics for government economic analysis
Respondents: Businesses or other for-profit
Estimated Number of Respondents: 143
Estimated Burden Hours Per Respondent: 2 hours
Frequency of Response: Monthly
Estimated Total Reporting Burden: 3,432 hours
OMB Number: 1512–0341
Form Numbers: ATF REC 5150/8
Type of Review: Extension
Title: Stills—Notices, Registration and Records
Description: The information collection requirement is used to account for and regulate the distillation of spirits. As there could be a substantial tax revenue loss that would be incurred through the illegal distillation of spirits, the data collected identifies the manufacturers, vendors, and users of spirits as well as providing an accounting of skills and other apparatus
Respondents: Businesses or other for-profit, small businesses or organizations

Estimated Number of Respondents/ Recordkeepers: 10
Estimated Burden Hours Per Respondent/Recordkeeper: 30 minutes
Frequency of Response: On occasion
Estimated Total Reporting/ Recordkeeping Burden: 21 hours
OMB Number: 1512–0461
Form Numbers: ATF REC 5110/11
Type of Review: Extension
Title: Marks and Labels on Containers of Distilled Spirits
Description: The marking, branding and labeling of containers of spirits by distilled spirits plants provide the data to identify, trace, and quantify the spirits
Respondents: Businesses or other for-profit, small businesses or organizations
Estimated Number of Respondents: 274
Estimated Burden Hours Per Respondent: 1 hour
Frequency of Response: Other (no recordkeeping or reporting)
Estimated Total Reporting Burden: 274 hours
Clearance Officer: Robert N. Hogarth (202) 927–8930, Bureau of Alcohol, Tobacco and Firearms, room 3200, 650 Massachusetts Avenue, NW., Washington, DC 20226
OMB Reviewer: Milo Sunderhauf (202) 395–6880, Office of Management and Budget, room 3001, New Executive Office Building, Washington, DC 20503

Lois K. Holland,

Departmental Reports Management Officer.

[FR Doc. 93–30188 Filed 12–10–93; 8:45 am]

BILLING CODE 4810–31–P

Public Information Collection Requirements Submitted to OMB for Review

December 1, 1993.

The Department of Treasury has submitted the following public information collection requirement(s) to OMB for review and clearance under the Paperwork Reduction Act of 1980, Public Law 96–511. Copies of the submission(s) may be obtained by calling the Treasury Bureau Clearance Officer listed. Comments regarding this information collection should be addressed to the OMB reviewer listed and to the Treasury Department Clearance Officer, Department of the Treasury, room 3171 Treasury Annex, 1500 Pennsylvania Avenue, NW., Washington, DC 20220.

Internal Revenue Service

OMB Number: 1545–0941
Form Number: IRS Form 8308
Type of Review: Extension
Title: Report of a Sale or Exchange of Certain Partnership Interests
Description: Form 8308 is an information return that gives the IRS the names of the parties involved in a section 751(a) exchange of a partnership interest. It is also used by the partnership as a statement to the transferor or transferee. It alerts the transferor that a portion of the gain on the sale of a partnership interest may be ordinary income
Respondents: Individual or households, farms, businesses or other for-profit, small businesses or organizations
Estimated Number of Respondents/ Recordkeeping: 200,000
Estimated Burden Hours Per Respondent/Recordkeeper:
Recordkeeping—2 hrs., 9 min
Learning about the law of the form—2 hrs., 41 min
Preparing and sending the form to the IRS—2 hrs., 50 min
Frequency of Response: On occasion
Estimated Total Reporting/ Recordkeeping Burden: 1,534,000 hours
Clearance Officer: Garrick Shear (202) 622–3869, Internal Revenue Service, room 5571, 1111 Constitution Avenue, NW., Washington, DC 20224
OMB Reviewer: Milo Sunderhauf (202) 395–6880, Office of Management and Budget, room 3001, New Executive Office Building, Washington, DC 20503

Lois K. Holland,

Departmental Reports Management Officer.

[FR Doc. 93–30189 Filed 12–10–93; 8:45 am]

BILLING CODE 4830–01–P

Public Information Collection Requirements Submitted to OMB for Review

December 7, 1993.

The Department of Treasury has submitted the following public information collection requirement(s) to OMB for review and clearance under the Paperwork Reduction Act of 1980, Public Law 96–511. Copies of the submission(s) may be obtained by calling the Treasury Bureau Clearance Officer listed. Comments regarding this information collection should be addressed to the OMB reviewer listed and to the Treasury Department Clearance Officer, Department of the Treasury, room 3171 Treasury Annex, 1500 Pennsylvania Avenue, NW., Washington, DC 20220.

Office of Thrift Supervision

OMB Number: 1550–0030
Form Number: OTS Form 1344
Type of Review: Extension
Title: Application for Issuance of Subordinated Debt Securities
Description: The information provided by OTS Form No. 1344 is evaluated by the OTS to determine the issuance of subordinated debt securities or mandatorily redeemable preferred stock complies with applicable state and Federal laws, OTS regulations and policies, and will not have an adverse effect on the institution.
Respondents: Businesses or other for-profit
Estimated Number of Respondents: 20
Estimated Burden Hours Per Respondent: 60 hours
Frequency of Response: Other (Submitted each time association applies to issue subordinated debt securities or mandatorily redeemable preferred stock.)
Estimated Total Reporting Burden: 1,200 hours
OMB Number: 1550–0037
Form Number: OTS Form 1240
Type of Review: Extension
Title: Trust Powers Application
Description: Section 550 of the Office of the Thrift Supervision ("OTS") regulations requires a Federal savings association, as defined in Section 1464 of the Home Owners Loan Act, that desires to exercise fiduciary powers, either as a trust department or through an affiliate, to file an application indicating which trust services it wishes to offer and providing the information necessary to make such determinations under Section 550.2(b).
Respondents: Businesses or other for-profit
Estimated Number of Respondents: 9
Estimated Burden Hours Per Respondent: 9 hours
Frequency of Response: Other (Submission is made by association proposing to utilize trust powers.)
Estimated Total Reporting Burden: 81 hours
OMB Number: 1550–0060
Form Number: OTS Form H-(b)11
Type of Review: Extension
Title: Savings and Loan Holding Company Report
Description: This report is used to determine a savings and loan holding company's adherence to the statutes, regulations and conditions of approval to acquire an insured institution and whether any of the company's activities would be injurious to the operation of any subsidiary savings association.
Respondents: Businesses or other for-profit
Estimated Number of Respondents: 587

Estimated Burden Hours Per Respondent: 15 hours, 30 minutes
Frequency of Response: Quarterly
Estimated Total Reporting Burden: 36,394 hours
Clearance Officer: Colleen Devine (202) 906–6025, Office of Thrift Supervision, 2nd Floor, 1700 G. Street, NW., Washington, DC 20552.
OMB Reviewer: Gary Waxman (202) 395–7340, Office of Management and Budget, room 3208, New Executive Office Building, Washington, DC 20503.

Lois K. Holland, Departmental Reports Management Officer.

[FR Doc. 93–30380 Filed 12–10–93; 8:45 am]
BILLING CODE 4810–25–P

Customs Service

[T.D. 93–94]

Determination That Maintenance of Determination/Finding of July 7, 1992, Pertaining to Certain Socks Imported From the PRC Is No Longer Necessary

AGENCY: U.S. Customs Service, Department of the Treasury.

ACTION: Determination that Merchandise is no longer Subject to 19 U.S.C. 1307.

SUMMARY: On July 7, 1992, the Commissioner of Customs, with the approval of the Secretary of the Treasury issued a determination/finding that certain child or infant and adult socks, possibly identified and/or marketed under the "Golden Double Horse" brand name, and manufactured at the Beijing Qinghe Hosiery Factory, People's Republic of China, with the use of convict labor and/or forced labor, and/or indentured labor, were being, or were likely to be imported into the United States. The Commissioner of Customs, pursuant to 19 CFR 12.42(f) has now determined, based upon additional Customs investigation, that such merchandise is no longer being, or is likely to be imported into the United States in violation of section 307 of the Tariff Act of 1930, as amended (19 U.S.C. 1307).

DATES: This determination shall take effect 5 days after the date of publication in the **Federal Register**.

FOR FURTHER INFORMATION CONTACT: Robert K. Neckel, Senior Special Agent, Office of Enforcement, Headquarters, U.S. Customs Service, 1301 Constitution Avenue, NW., Washington DC 20229 (202) 927–1510.

Determination

Pursuant to § 12.42(f), Customs Regulations (19 CFR 12.42(f)), it is hereby determined that certain articles of the People's Republic of China are no longer being, or likely to be, imported into the United States, which were being mined, produced or manufactured with the use of convict, forced, or indentured labor.

Articles schedule	Item number from the Harmonized Tariff (19 U.S.C. 1202)
Child or Infant Socks .	6115.93.20209 (Textile Category 632).
Adult Socks	6115.92.20004 (Textile Category 332).
(Manufactured by the Beijing Qinghe Hosiery Factory)	

Approved: November 15, 1993.

Samuel H. Banks.

Acting Commissioner of Customs.

Dated: November 18, 1993.

John P. Simpson,

Deputy Assistant Secretary (Enforcement).

[FR Doc. 93–30374 Filed 12–10–93; 8:45 am]
BILLING CODE 4820–02–M

UNITED STATES INFORMATION AGENCY

Culturally Significant Objects Imported for Exhibition; Determination

Notice is hereby given of the following determination: Pursuant to the authority vested in me by the Act of October 19, 1965 (79 Stat. 985, 22 U.S.C. 2459), Executive Order 12047 of March 27, 1978 (43 FR 13359, March 29, 1978), and Delegation Order No. 85–5 of June 27, 1985 (50 FR 27393, July 2, 1985), I hereby determine that the objects in the exhibit, "The Currency of Fame: Portrait Medals of the Renaissance" (see list [1]) imported from abroad for the temporary exhibition without profit within the United States, are of cultural significance. These objects are imported pursuant to a loan agreement with the foreign lender. I also determine that the temporary exhibition of the objects at the National Gallery of Art, Washington, DC, from on or about January 23, 1994, to on or about May 1, 1994 and The Frick Collection, New York, N.Y. from on or about May 24, 1994, to on or about August 22, 1994, is in the national interest.

[1] A copy of this list may be obtained by contracting Ms. Nelia Sheahan of the Office of the General Counsel of USIA. The telephone number is 202/619–6975, and the address is Room 700, U.S. Information Agency, 301 Fourth Street, SW., Washington, DC 20547.

Public notice of this determination is ordered to be published in the **Federal Register**.

Dated: December 8, 1993.

R. Wallace Stuart,

Acting General Counsel.

[FR Doc. 93–30364 Filed 12–10–93; 8:45 am]
BILLING CODE 8230–01–M

Advisory Commission on Public Diplomacy Meeting

AGENCY: United States Information Agency.

ACTION: Notice.

SUMMARY: A meeting of the U.S. Advisory Commission on Public Diplomacy will be held on December 15 in room 600, 301 4th Street, SW., Washington DC from 8:45 a.m. to 11 a.m.

At 8:45 a.m. there will be a panel discussion on VOA and television with Mr. Woody Demitz, Chief, Russian Service; VOA, Ms. Oksana Dragan, Chief, North European Division, VOA; Mr. Robert Knopes, Chief, East Asia & Pacific Division, VOA; Mr. Dan Sreebny, Chief, North Africa, Near East, & South Asia Division, VOA; and Mr. Alan Heil, Deputy Program Manager, VOA. At 10:15 a.m. the Commission will meet with Mr. Charles Fox, Director, Television and Film Service, USIA, for a discussion of USIA's television's policies and programs.

FOR FURTHER INFORMATION CONTACT: Please call Gloria Kalamets, (202) 619–4468, if you are interested in attending the meeting. Space is limited and entrance to the building is controlled.

Dated: December 8, 1993.

Rose Royal,

Management Analyst, Federal Register Liaison.

[FR Doc. 93–30365 Filed 12–10–93; 8:45 am]
BILLING CODE 8230–01–M

DEPARTMENT OF VETERANS AFFAIRS

Information Collection Under OMB Review: Inquiry Concerning Applicant for Employment, VA Form Letter 5–127

AGENCY: Department of Veterans Affairs.

ACTION: Notice.

The Department of Veterans Affairs has submitted to OMB the following proposal for the collection of information under the provisions of the Paperwork Reduction Act (44 U.S.C. Chapter 35). This document lists the following information: (1) The title of

the information collection, and the Department form number(s), if applicable; (2) a description of the need and its use; (3) who will be required or asked to respond; (4) an estimate of the total annual reporting hours, and recordkeeping burden, if applicable; (5) the estimated average burden hours per respondent; (6) the frequency of response; and (7) an estimated number of respondents.

ADDRESSES: Copies of the proposed information collection and supporting documents may be obtained from Patti Viers, Office of Information Resources Management (723), Department of Veterans Affairs, 810 Vermont Avenue, NW., Washington, DC 20420 (202) 233–3172.

Comments and questions about the items on the list should be directed to VA's OMB Desk Officer, Joseph Lackey, NEOB, room 3002, Washington, DC 20503, (202) 395–7316. Do not send requests for benefits to this address.

DATES: Comments on the information collection should be directed to the OMB Desk Officer by January 12, 1994.

Dated: December 1, 1993.

By direction of the Secretary.

B. Michael Berger,

Director, Records Management Service.

Extension

1. Inquiry Concerning Applicant or Employment, VA Form Letter 5–127.

2. The form letter is used to obtain information from individuals who have knowledge of applicant's past work record, performance, and character. The information is used by VA personnel officials to verify qualifications and determine suitability of applicants for VA employment.

3. Individuals or households—State or local governments—Businesses or other for-profit—Federal agencies or employees.

4. 3,125 hours.

5. 15 minutes.

6. On occasion.

7. 12,500 respondents.

[FR Doc. 93–30334 Filed 12–10–93; 8:45 am]

BILLING CODE 8320–01–M

Information Collection Under OMB Review: Notice for Election To Convey and/or Invoice for Transfer of Property, VA Form 26–8903

AGENCY: Department of Veterans Affairs.

ACTION: Notice.

The Department of Veterans Affairs has submitted to OMB the following proposal for the collection of information under the provisions of the Paperwork Reduction Act (44 U.S.C. Chapter 35). This document lists the following information: (1) The title of the information collection, and the Department form number(s), if applicable; (2) a description of the need and its use; (3) who will be required or asked to respond; (4) an estimate of the total annual reporting hours, and recordkeeping burden, if applicable; (5) the estimated average burden hours per respondent; (6) the frequency of response; and (7) an estimated number of respondents.

ADDRESSES: Copies of the proposed information collection and supporting documents may be obtained from Janet G. Byers, Veterans Benefits Administration (20A5), Department of Veterans Affairs, 810 Vermont Avenue, NW., Washington, DC 20420 (202) 233–3021.

Comments and questions about the items on the list should be directed to VA's OMB Desk Officer, Joseph Lackey, NEOB, room 3002, Washington, DC 20503, (202) 395–7316. Do not send requests for benefits to this address.

DATES: Comments on the information collection should be directed to the OMB Desk Officer by January 12, 1994.

Dated: December 1, 1993.

By direction of the Secretary.

B. Michael Berger,

Director, Records Management Service.

Extension

1. Notice for Election to Convey and/or Invoice for Transfer of Property, VA Form 26–8903.

2. The form is used by lenders to notify VA of the conveyance of a property to VA incident to foreclosure of a GI home loan. The form serves four purposes: lender's election to convey; invoice for the purchase price of the property; VA's voucher for authorizing payment to the lender; and establishment of VA's property records.

3. Businesses or other for-profit—Small businesses or organizations.

4. 5,000 hours.

5. 10 minutes.

6. On occasion.

7. 35,000 respondents.

[FR Doc. 93–30335 Filed 12–10–93; 8:45 am]

BILLING CODE 8320–01–M

Information Collection Under OMB Review: Computation of Loan Amount for Manufactured Home Unit, VA Form 26–8641a

AGENCY: Department of Veterans Affairs.

ACTION: Notice.

The Department of Veterans Affairs has submitted to OMB the following proposal for the collection of information under the provisions of the Paperwork Reduction Act (44 U.S.C. Chapter 35). This document lists the following information:

(1) The title of the information collection, and the Department form number(s), if applicable,

(2) A description of the need and its use,

(3) Who will be required or asked to respond;

(4) An estimate of the total annual reporting hours, and recordkeeping burden, if applicable;

(5) The estimated average burden hours per respondent;

(6) The frequency of response; and

(7) An estimated number of respondents.

ADDRESSES: Copies of the proposed information collection and supporting documents may be obtained from Janet G. Byers, Veterans Benefits Administration (20A5), Department of Veterans Affairs, 810 Vermont Avenue, NW., Washington, DC 20420 (202) 233–3021.

Comments and questions about the items on the list should be directed to VA's OMB Desk Officer, Joseph Lackey, NEOB, room 3002, Washington, DC 20503, (202) 395–7316. Do not send requests for benefits to this address.

DATES: Comments on the information collection should be directed to the OMB Desk Officer within 30 days of this notice.

Dated: December 1, 1993.

By direction of the Secretary.

B. Michael Berger,

Director, Records Management Service.

Revision

1. Computation of Loan Amount for Manufactured Home Unit, VA Form 26–8641a.

2. The form is completed by the lender for the purpose of showing how the loan amount is computed for manufactured home units. The information is used by VA to properly verify the computation of the loan amount upon which the amount of guaranty is based.

3. Business or other for-profit.

4. 25 hours.

5. 10 minutes.

6. On occasion.

7. 150 respondents.

[FR Doc. 93–30332 Filed 12–10–93; 8:45 am]

BILLING CODE 8320–01–M

Information Collection Under OMB Review: Daily Report of Workmen and Material—Daily Log—Formal Contract, VA Form 08–6131

AGENCY: Department of Veterans Affairs.

ACTION: Notice.

The Department of Veterans Affairs has submitted to OMB the following proposal for the collection of information under the provisions of the Paperwork Reduction Act (44 U.S.C. Chapter 35). This document lists the following information:

(1) The title of the information collection, and the Department form number(s), if applicable;

(2) A description of the need and its use;

(3) Who will be required or asked to respond;

(4) An estimate of the total annual reporting hours, and recordkeeping burden, if applicable;

(5) The estimated average burden hours per respondent;

(6) The frequency of response; and

(7) An estimated number of respondents.

ADDRESSES: Copies of the proposed information collection and supporting documents may be obtained from Patti Viers, Office of Information Resources Management (723), Department of Veterans Affairs, 810 Vermont Avenue, NW., Washington, DC 20420 (202) 233–3172.

Comments and questions about the items on the list should be directed to VA's OMB Desk Officer, Joseph Lackey, NEOB, room 3002, Washington, DC 20503, (202) 395–7316. Do not send requests for benefits to this address.

DATES: Comments on the information collection should be directed to the OMB Desk Officer within 30 days of this notice.

Dated: December 1, 1993.

By direction of the Secretary.

B. Michael Berger,

Director, Records Management Service.

Extension

1. Daily Report of Workmen and Material—Daily Log—Formal Contract, VA Form 08–6131.

2. The form is used by contractors to furnish daily reports verifying work progression and assure proper contract compliance. The information is used by VA to monitor the programs of the contractor.

3. Businesses or other for-profit—Small businesses or organizations.

4. 13,000 hours.

5. 10 minutes.

6. Every workday.

7. 300 respondents.

[FR Doc. 93–30333 Filed 12–10–93; 8:45 am]

BILLING CODE 8320–01–M

Sunshine Act Meetings

Federal Register
Vol. 58, No. 237
Monday, December 13, 1993

This section of the FEDERAL REGISTER contains notices of meetings published under the "Government in the Sunshine Act" (Pub. L. 94-409) 5 U.S.C. 552b(e)(3).

FEDERAL DEPOSIT INSURANCE CORPORATION

Notice of Agency Meeting

Pursuant to the provisions of the "Government in the Sunshine Act" (5 U.S.G. 552b), notice is hereby given that at 10:02 a.m. on Thursday, December 9, 1993, the Board of Directors of the Federal Deposit Insurance Corporation met in open session to consider the following matter:

Memorandum and resolution re: Proposed amendments to Part 345 of the Corporation's rules and regulations, entitled "Community Reinvestment," which would provide clearer guidance to financial institutions on the nature and extent of their Community Reinvestment Act obligation and the methods by which the obligation will be assessed and enforced.

In calling the meeting, the Board determined, on motion of Director Jonathan L. Fiechter (Acting Director, Office of Thrift Supervision), seconded by Director Eugene A. Ludwig (Comptroller of the Currency), concurred in by Acting Chairman Andrew C. Hove, Jr., that Corporation business required its consideration of the matter on less than seven days' notice to the public; and that no notice of the meeting earlier than December 6, 1993, was practicable.

The meeting was held in the Board Room on the sixth floor of the FDIC Building located at 550 17th Street, NW., Washington, DC.

Dated: December 9, 1993.

Federal Deposit Insurance Corporation.

Patti C. Fox,

Assistant Executive Secretary.

[FR Doc. 93–30516 Filed 12–9–93; 3:55 pm]

BILLING CODE 6714–01–M

FEDERAL DEPOSIT INSURANCE CORPORATION

Notice of Agency Meeting

Pursuant to the provisions of the "Government in the Sunshine Act" (5 U.S.C. 552b), notice is hereby given that at 10:11 a.m. on Thursday, December 9, 1993, the Board of Directors of the Federal Deposit Insurance Corporation met in closed session to consider recommendations concerning administrative enforcement proceedings; matters relating to the Corporation's corporate activities; and a personnel matter.

In calling the meeting, the Board determined, on motion of Director Jonathan L. Fiechter (Acting Director, Office of Thrift Supervision), seconded by Director Eugene A. Ludwig (Comptroller of the Currency), concurred in by Acting Chairman Andrew C. Hove, Jr., that Corporation business required its consideration of the matters on less than seven days' notice to the public; that no earlier notice of the meeting was practicable; that the public interest did not require consideration of the matters in a meeting open to public observation; and that the matters could be considered in a closed meeting by authority of subsections (c)(2), (c)(4), (c)(6), (c)(8), (c)(9)(A)(ii), (c)(9)(B), and (c)(10) of the "Government in the Sunshine Act" (5 U.S.C. 552b(c)(2), (c)(4), (c)(6), (c)(8), (c)(9)(A)(ii), (c)(9)(B), and (c)(10)).

The meeting was held in the Board Room of the FDIC Building located at 550 17th Street, NW., Washington, DC.

Dated: December 9, 1993.

Federal Deposit Insurance Corporation.

Patti C. Fox,

Assistant Executive Secretary.

[FR Doc. 93–30517 Filed 12–9–93; 3:55 pm]

BILLING CODE 6714–01–M

FEDERAL DEPOSIT INSURANCE CORPORATION

Notice of Changes in Time of Agency Meetings

Pursuant to the provisions of the "Government in the Sunshine Act" (5 U.S.C. 552b), notice is hereby given that the previously announced meetings of the Board of Directors of the Federal Deposit Insurance Corporation scheduled for 10:00 a.m. (open session) and 10:30 a.m. (closed session) on Tuesday, December 14, 1993, have been rescheduled for 2:00 p.m. and 2:30 p.m., respectively, that same day.

No earlier notice of the changes in the time of the meeting was practicable.

Dated: December 9, 1993.

Federal Deposit Insurance Corporation.

Robert E. Feldman,

Deputy Executive Secretary.

[FR Doc. 93–30518 Filed 12–9–93; 3:55 pm]

BILLING CODE 6714–01–M

DEPARTMENT OF ENERGY

FEDERAL ENERGY REGULATORY COMMISSION

The following notice of meeting is published pursuant to section 3(a) of the Government in the Sunshine Act (Pub. L. No. 94–409), U.S.C. 552b:

DATE AND TIME: December 15, 1993, 10:00 a.m.

PLACE: 825 North Capitol Street, NE., room 9306, Washington, DC. 20426.

STATUS: Open.

MATTERS TO BE CONSIDERED: Agenda

Note—Items listed on the agenda may be deleted without further notice.

CONTACT PERSON FOR MORE INFORMATION: Lois D. Cashell, Secretary, Telephone (202) 208–0400. For a recording listing items stricken from or added to the meeting, call (202) 208–1627.

This is a list of matters to be considered by the Commission. It does not include a listing of all papers relevant to the items on the agenda; however, all public documents may be examined in the Reference and Information Center.

Consent Agenda—Hydro, 991st Meeting—December 15, 1993, Regular Meeting (10:00 a.m.)

CAH–1.
Project No. 2523–009, Wisconsin Electric Power Company
CAH–2.
Project No. 3258–005, Joseph M. Keating
CAH–3.
Project No. 10661–004, Indiana Michigan Power Company
CAH–4.
Omitted
CAH–5.
Project No. 9401–017, Halecrest Company
CAH–6.
Docket No. 2445–005, OMYA, Inc.
CAH–7.
Docket No. 2299–024, Turlock Modesto Irrigation District
CAH–8.
Docket No. 2711–002, Northern States Power Company
CAH–9.
Omitted
CAH–10.
Docket No. 11330–001, South Fork Hydro Associates, dba Current Power Technologies, Inc.
Docket No. 11331–001, Upper Falls Hydro Associates, dba Current Power Technologies, Inc.

Consent Agenda—Electric

CAE–1.

Docket No. ER93–807–000, Northern States Power Company (Minnesota)
CAE–2.
Docket No. ER93–429–000, South Carolina Electric & Gas Company
CAE–3.
Docket No. ER79–009, Century Power Corporation
CAE–4.
Docket No. EL93–45–001, Metropolitan Dade County, Florida v. Energy Systems Division of Thermo Electron Corporation, *et al.*
Docket No. QF83–248–003, Energy Systems Division of Thermo Electron Corporation, *et al.*
CAE–5.
Docket No. ER82–616–037, System Energy Resources, Inc.
CAE–6.
Docket No. ER93–523–001 and ER93–533–001, Western Resources, Inc. and Kansas Gas & Gas & Electric Company
CAE–7.
Docket Nos. ER93–465–002 and ER93–922–001, Florida Power & Light Company
CAE–8.
Omitted
CAE–9.
Docket No. EL93–22–002 and EL93–38–000, Maine Yankee Atomic Power Company
CAE–10.
Docket No. EC93–6–001, Cincinnati Gas & Electric Company and PSI Energy, Inc.
CAE–11.
Docket No. ER93–327–001, Florida Power & Light Company
CAE–12.
Docket No. EG94–3–000, Northern Mindanao Power Corporation
CAE–13.
Docket No. EG94–2–000, Texas Cogeneration Limited Partnership
CAE–14.
Docket No. EG94–4–000, EPZ 93–1 Trust, Acting Through its Trustee, State Street Bank and Trust Company of Connecticut, National Association
CAE–15.
Docket No. EL90–48–000 and 003, City of New Orleans, Louisiana v. Entergy Corporation, Arkansas Power and Light Company, New Orleans Public Service, Inc., Louisiana Power and Light Company, Mississippi Power and Light Company, and System Energy Resources, Inc.
CAE–16.
Docket No. EL93–28–000, Seminole Electric Cooperative, Inc. v. Florida Power & Light Company
Docket No. EL93–40–000, Florida Municipal Power Agency v. Florida Power & Light Company
Docket Nos. ER93–465–000, ER93–922–000 and EL94–12–000, Florida Power & Light Company
CAE–17.
Docket Nos. EL94–3–000 and QF84–433–003, New Charleston Power I, L.P.
CAE–18.
Docket No. RM93–20–000, Electronic Filing of FERC Form No. 1 and Delegation to Chief Accountant
CAE–19.
Docket No. EL93–33–000, Louisiana Energy and Power Authority v. Central Louisiana Electric Company, Inc.
CAE–20.
Omitted
CAE–21.
Docket No. ER93–355–000, Tuscon Electric Power Company
CAE–22.
Docket Nos. TX93–4–001 and EL93–51–001, Florida Municipal Power Agency v. Florida Power & Light Company
CAE–23.
Docket No. ER93–920–002, New England Power Company
CAE–24.
Docket No. AC94–14–000, Century Power Corporation

Consent Agenda—Oil and Gas

CAG–1.
Docket No. RP94–55–000, Algonquin Gas Transmission Company
CAG–2.
Docket Nos. RP94–59–000 and RP94–46–001, Transcontinental Gas Pipe Line Corporation
CAG–3.
Docket No. RP93–36–006, Natural Gas Pipeline Company of America
CAG–4.
Docket No. TM94–2–59–000, Northern Natural Gas Company
CAG–5.
Docket Nos. RP92–73–000, 008 and RS92–21–000, National Fuel Gas Supply Corporation
CAG–6.
Docket Nos. RP92–185–003 and 005, El Paso Natural Gas Company
CAG–7.
Docket No. RP92–237–010, Alabama-Tennessee Natural Gas Company
CAG–8.
Omitted
CAG–9.
Docket No. RP93–187–005, Equitrans, Inc.
CAG–10.
Omitted
CAG–11.
Docket Nos. RP89–224–009, RP89–203–000, RP90–139–000 and RP92–69–000, Southern Natural Gas Company
CAG–12.
Docket No. RP92–134–005, Southern Natural Gas Company
CAG–13.
Docket No. PR93–13–000, Gulf States Pipeline Corporation
CAG–14.
Docket Nos. RP93–5–011 and 016, Northwest pipeline Corporation
CAG–15.
Docket No. RP91–104–007, Transwestern Pipeline Company
CAG–16.
Docket No. TM94–2–28–001, Panhandle Eastern Pipe Line Company
CAG–17.
Docket No. RP92–166–012, Panhandle Eastern Pipe Line Company
CAG–18.
Docket Nos. RP93–125–000 and 001, Texas Eastern Transmission Corporation
CAG–19.
Docket No. RP93–126–001, Algonquin Gas Transmission Company
CAG–20.
Omitted
CAG–21.
Omitted
CAG–22.
Docket Nos. RP85–203–013 and RP88–203–010, Panhandle Eastern Pipe Line Company
Docket No. RP85–202–011, Trunkline Gas Company
Docket Nos. RP93–127–001, 002 and RP93–102–002, Columbia Gas Transmission Corporation
CAG–23.
Docket No. RP93–14–013, Algonquin Gas Transmission Company
CAG–24.
Docket No. RP87–14–012, RP90–22–019 and RP93–14–012, Algonquin Gas Transmission Company
CAG–25.
Docket Nos. RP91–41–018 and RP91–90–010, Columbia Gas Transmission Corporation
CAG–26.
Docket No. RP85–170–009, Texas Eastern Transmission Corporation
CAG–27.
Docket No. RP85–181–006, Texas Gas Transmission Corporation
CAG–28.
Docket No. RP88–259–068, Northern Natural Gas Company
CAG–29.
Docket No. RM84–6–038, Refunds Resulting from BTU Measurement Adjustments
CAG–30.
Docket No. CP93–333–000, Meridian Oil, Inc. v. Southern California Gas Company and Pacific Gas and Electric Company
Docket No. RS92–60–000, El Paso Natural Gas Company
Docket No. RS92–87–000, Transwestern Pipeline Company
CAG–31.
Docket No. RO89–2–000, Cities Service Oil and Gas Corporation
CAG–32.
Omitted
CAG–33.
Docket No. RS92–40–003, Louisiana-Nevada Transit Company
CAG–34.
Docket No. RS92–67–002, Northern Border Pipeline Company
CAG–35.
Docket No. RS92–27–008, Alabama-Tennessee Natural Gas Company
CAG–36.
Docket No. RS92–30–007, Carnegie Natural Gas Company
CAG–37.
Docket No. RS92–33–005, East Tennessee Natural Gas Company
Docket No. RS92–41–007, Midwestern Gas Transmission Company
Docket No. RS92–23–015, Tennessee Gas Pipeline Company
CAG–38.
Docket No. RS92–8–007, Northern Natural Gas Company
CAG–39.

Docket Nos. CP92–165–004 and 005, Texas Eastern Transmission Corporation

CAG–40.
Docket Nos. CP91–732–003 and CP88–332–024, Indicated Shippers v. El Paso Natural Gas Company

CAG–41.
Docket No. CP93–41–002, K N Energy, Inc. and K N Interstate Gas Transmission Company
Docket No. CP93–42–002, K N Gas Gathering, Inc.

CAG–42.
Docket No. CP93–283–002, Williston Basin Interstate Pipeline Company

CAG–43.
Docket No. CP93–737–000, Transcontinental Gas Pipe Line Corporation

CAG–44.
Omitted

CAG–45.
Docket No. CP92–595–000, Great Lakes Gas Transmission Limited Partnership

CAG–46.
Docket No. CP92–606–000, Great Lakes Gas Transmission Limited Partnership

CAG–47.
Omitted

CAG–48.
Docket No. CP93–670–000, Questar Pipeline Company

CAG–49.
Docket Nos. CP93–690–000, CP93–691–000 and CP93–697–000, High Island Offshore System

CAG–50.
Docket No. CP91–1110–003, Colorado Interstate Gas Company

CAG–51.
Docket No. RP93–206–001, Northern Natural Gas Company

CAG–52.
Docket No. RP93–106–005, Texas Gas Transmission Corporation

CAG–53.
Docket No. RP94–18–002, Texas Eastern Transmission Corporation

CAG–54.
Docket Nos. RP91–203–037, RP92–132–036 and RS92–23–017, Tennessee Gas Pipeline Company

CAG–55.
Docket No. RP91–203–038, Tennessee Gas Pipeline Company

CAG–56.
Docket Nos. RP94–1–002 and RP93–161–002, Columbia Gas Transmission Corporation

CAG–57.
Docket Nos. RP94–16–001 and RP85–177–116, Texas Eastern Transmission Corporation

CAG–58.
Docket Nos. RP93–200–001, RP93–150–003 and RP94–8–001, Northern Natural Gas Company

CAG–59.
Docket Nos. RP94–3–001 and RP94–7–001, Northern Natural Gas Company

CAG–60.
Docket No. RP93–204–001, Texas Eastern Transmission Corporation

CAG–61.
Docket Nos. RP80–97–061, RP82–12–024 and RP91–203–039, Tennessee Gas Pipeline Company

CAG–62.
Docket Nos. RP85–177–117, TA91–1–17–010, TM91–2–17–005, TA92–1–17–011 and TA93–1–17–008, Texas Eastern Transmission Corporation

CAG–63.
Docket No. RS92–22–013, Panhandle Eastern Pipe Line Company

CAG–64.
Docket Nos. CP92–184–006 and CP92–459–005, Texas Eastern Transmission Corporation

CAG–65.
Omitted

CAG–66.
Docket Nos. RS92–15–010 and RP93–62–010, Equitrans, Inc.

CAG–67.
Docket No. RS92–1–009, ANR Pipeline Company

CAG–68.
Docket Nos. CP80–34–012 and CP93–558–001, Panhandle Eastern Pipe Line Company
Docket No. CP80–35–012, Colorado Interstate Gas Company

CAG–69.
Docket No. CP93–41–003, K N Energy, Inc. and K N Interstate Gas Transmission Company
Docket No. CP93–42–003, K N Gas Gathering, Inc.

CAG–70.
Docket No. CP93–79–001, Mid Louisiana Gas Company and North Louisiana Gathering Company

CAG–71.
Docket No. CP89–710–013, Transcontinental Gas Pipe Line Corporation
Docket No. CP88–171–029, Tennessee Gas Pipe Line Company

Hydro Agenda

H–1.
Docket No. RM93–7–000, Charges and Fees for Hydroelectric Projects. Notice of proposed rulemaking.

Electric Agenda

E–1.
Docket Nos. EC92–21–000 and ER92–806–000, Entergy Services, Inc. and Gulf States Utilities Company
Docket No. EL94–13–000, Entergy Services, Inc. Opinion and Order on Initial Decision.

E–2.
Docket No. RM94–7–000, Recovery of Stranded Costs in Transmission Rates. Notice of proposed rulemaking.

Oil and Gas Agenda

I. Pipeline Rate Matters

PR–1.
Docket No. RM87–5–012, Inquiry Into Alleged Anticompetitive Practices Related to Marketing Affiliates of Interstate Pipelines
Docket No. CP87–238–003, Ozark Gas Transmission System. Order on rehearing.

PR–2.
Docket No. RM94–6–000, Standards of Conduct and Reporting Requirements for Transportation and Affiliate Transactions. Notice of proposed rulemaking.

PR–3.
Docket No. RM93–4–000, Standards for Electronic Bulletin Boards Required Under Part 284 of the Commission's Regulations. Final rule.

PR–4.
Docket No. MG88–44–003, ANR Pipeline Company
Docket Nos. MG88–20–003, and 004, ARKLA Energy Resources, a division of Arkla, Inc.
Docket Nos. MG89–4–004 and 005, Carnegie Natural Gas Company
Docket No. MG88–45–003, Colorado Interstate Gas Company
Docket No. MG92–1–000, Iroquois Gas Transmission System, L.P.
Docket No. MG92–2–000, Michigan Gas Storage Company
Docket No. MG91–5–000, Overthrust Pipeline Company
Docket No. MG92–3–000, Pacific Gas Transmission Company
Docket No. MG89–18–003, Seagull Interstate Corporation
Docket No. MG88–13–005, 006 and 007, Valero Interstate Transmission Company Order on standards.

PR–5.
Docket No. MG91–4–001, East Tennessee Natural Gas Company
Docket Nos. MG88–17–001, 002 and 003, El Paso Natural Gas Company
Docket Nos. MG90–4–001, 002 and 003, Midwestern Gas Transmission Company
Docket Nos. MG88–12–003, 005, 006 and 007, Mississippi River Transmission Corporation
Docket No. MG88–31–004, Natural Gas Pipeline Company of America
Docket No. MG88–6–004, Phillips Gas Pipeline Company
Docket No. MG88–19–005, Tennessee Gas Pipeline Company
Docket No. MG88–47–002, 003 and 004, Texas Gas Transmission Corporation
Docket No. MG88–51–005 and 006, Transcontinental Gas Pipe Line Corporation
Docket No. MG88–9–005, Transwestern Pipeline Company
Docket No. MG90–11–003 and 004, Viking Gas Transmission Company. Order on standards.

PR–6.
Docket No. MG91–6–000, Wyoming Interstate Company, Ltd. Order on standards.

PR–7.
Docket No. MG92–4–000, Gas Transport, Inc. Order on standards.

PR–8.
Docket No. MG92–5–000, Kern River Gas Transmission Company. Order on standards.

PR–9.
Docket No. MG93–2–000, Louisiana-Nevada Transit Company. Order on waiver.

PR–10.
Docket No. MG93–5–000, Texas-Ohio Pipeline, Inc. Order on standards.

II. Restructuring Matters

RS–1.
Docket Nos. RS92–69–006, 007, CP88–651–011, CP92–79–005, RP91–166–022 and RP93–20–005, Northwest Pipeline Corporation. Order on rehearing.

RS–2.
Docket Nos. RS92–26–007 and 008, Koch Gateway Pipeline Company (formerly United Gas Pipe Line Company). Order on compliance and rehearing.

RS–3.
Docket Nos. RS92–3–002, 003, 004 and CP88–820–000, Arkla Energy Resources Company. Order on compliance and rehearing.

RS–4.
Docket Nos. RS92–24–009, 010 and 011, Texas Gas Transmission Corporation. Order on rehearing.

RS–5.
Docket Nos. RS92–10–003, 004, 005, CP71–273–005, RP92–134–007 and RP93–15–004, Southern Natural Gas Company. Order on compliance and rehearing.

RS–6.
Docket Nos. RS92–75–005, 006, 007 and 008, Paiute Pipeline Company. Order on rehearing.

RS–7.
Docket Nos. RS92–74–001 and RP92–157–005, Pacific Offshore Pipeline Company. Order on rehearing.

RS–8.
Docket Nos. RS92–5–007, 008, 010, RP90–108–021, RP91–82–012, RP91–161–015, RP92–3–008, RP93–66–002 and RP93–115–002, Columbia Gas Transmission Corporation
Docket Nos. RS92–6–007, 008, RP90–107–018, RP91–160–012, RP92–2–008 and CP93–736–001, Columbia Gulf Transmission Company. Order on compliance, clarification and rehearing.

RS–9.
Docket Nos. RS92–14–007, 008, 009, 010, CP93–39–002, CP93–147–002, CP93–149–002, G–1391–002, RP93–72–002, CP88–197–007, CP88–388–007, CP87–5–030, CP87–312–018, CP87–313–005, CP87–314–005, CP84–306–006, CP80–223–006, CP92–397–003, CP91–554–010, CP92–491–007, CP61–198–002, RP89–124–007, RP91–51–012, RP91–98–008, RP91–125–005, TM91–5–22–003, TM91–6–22–006, TM91–7–22–006, TM91–9–22–004, TM92–1–22–005, RP91–222–005, RP92–7–002, TM92–3–22–003, TM92–4–22–002, TM92–5–22–004, TM92–7–22–002, TM92–10–22–003, RP93–69–003, TM93–3–22–002, TQ93–3–22–003, TQ93–4–22–003, TQ93–2–22–002, TF93–3–22–002, TF93–2–22–002, TF93–1–22–003, TQ93–1–22–002, TA92–1–22–004, TQ92–2–22–003, TQ92–3–22–002, TQ92–4–22–003, TQ92–1–22–003, TA91–1–22–008, TQ91–3–22–004, TQ91–4–22–002, TF91–2–22–002, TF91–1–22–003, TQ91–1–22–004 and TQ91–2–22–003, CNG Transmission Corporation. Order on compliance, clarification and rehearing.

RS–10.
Docket Nos. RS92–64–005, 006 and 007, High Island Offshore System
Docket Nos. RS92–88–007, 008 and 009, U–T Offshore System. Order on compliance, clarification and rehearing.

RS–11.
Docket Nos. RS92–13–000, 003, 004, 005, 006, CP82–487–042, RP86–10–022, RP89–34–008, RP92–163–006, RP92–170–006, RP92–236–004 and CP93–283–001, Williston Basin Interstate Pipeline Company. Order on compliance, clarification and rehearing.

RS–12.
Docket Nos. RS92–16–004, 005, RP91–187–011, CP91–2448–005, MG88–3–000, 005 and 006, Florida Gas Transmission Company. Order on compliance, clarification and rehearing.

RS–13.
Omitted.

RS–14.
Docket Nos. RS92–43–000, 006, 007, 008, RP93–4–011 and RP94–19–000, Mississippi River Transmission Corporation. Order on compliance, clarification and rehearing.

RS–15.
Docket Nos. RS92–63–006 and 007, Great Lakes Gas Transmission Limited Partnership. Order on compliance, reconsideration and rehearing.

RS–16.
Docket Nos. RS92–57–003 and 004, Canyon Creek Compression Company. Order on compliance, reconsideration and rehearing.

RS–17.
Docket Nos. RS92–11–000, 017, 019, 020, RP88–67–069, RP92–234–004, RP85–177–115, RP93–13–004, RP93–22–003 and CP90–2154–006, Texas Eastern Transmission Corporation
Docket No. RP93–65–002, Public Service Electric and Gas Company v. Texas Eastern Transmission Corporation
Docket Nos. RP88–81–023, RP88–221–017, RP89–255–006, RP90–15–004, RP90–119–017 and RP91–4–005, Texas Eastern Transmission Corporation. Order on compliance and rehearing.

RS–18.
Docket Nos. RS92–28–000, 012, 013, 014, RP93–14–015 and CP93–77–003, Algonquin Gas Transmission Company. Order on compliance and hearing.

RS–19.
Docket Nos. RS92–45–007, 008, 009 and 010, Natural Gas Pipeline Company of America. Order on compliance, clarification and rehearing.

RS–20.
Docket Nos. RS92–85–004 and 005, Trailblazer Pipeline Company. Order on compliance and rehearing.

RS–21.
Docket Nos. RS92–81–003, 004 and RP91–212–010, Stingray Pipeline Company. Order on compliance and rehearing.

RS–22.
Docket Nos. RS92–86–077, 012, 013, RP92–108–009, 010, RP92–137–019 and 020, Transcontinental Gas Pipe Line Corporation. Order on compliance, clarification and rehearing.

RS–23.
Docket Nos. RS92–25–005, 006 and CP93–504–002, Trunkline Gas Company. Order on compliance, clarification and rehearing.

RS–24.
Docket Nos. RS92–9–004, 006, 007, 005, 008, 002, 003, RP93–18–000, 002, and 001, Questar Pipeline Company. Order on compliance and rehearing.

RS–25.
Docket Nos. RS92–46–006 and 007, Pacific Gas Transmission Company. Order on rehearing.

RS–26.
Docket No. RS92–23–016, Tennessee Gas Pipe Line Company
Docket No. RS92–33–006, East Tennessee Natural Gas Pipe Line Company
Declaratory order.

III. Pipeline Certificate Matters

PC–1.
Reserved.

Lois D. Cashell,

Secretary.

[FR Doc. 93–30519 Filed 12–9–93; 3:56 pm]

BILLING CODE 6717–01–M

BOARD OF GOVERNORS OF THE FEDERAL RESERVE SYSTEM

"FEDERAL REGISTER" CITATION OF PREVIOUS ANNOUNCEMENT: 58 FR 64439, December 7, 1993.

PREVIOUSLY ANNOUNCED TIME AND DATE OF THE MEETING: Approximately 3:00 p.m., Friday, December 10, 1993, following a recess at the conclusion of the open meeting.

CHANGES IN THE MEETING: Addition of the following closed item(s) to the meeting:

International banking matter.

(This matter was originally announced for a closed meeting on November 15, 1993.)

CONTACT PERSON FOR MORE INFORMATION: Mr. Joseph R. Coyne, Assistant to the Board; (202) 452–3204.

Dated: December 9, 1993.

Jennifer J. Johnson,

Associate Secretary of the Board.

[FR Doc. 93–30477 Filed 12–9–93; 2:42 pm]

BILLING CODE 6210–01–P

BOARD OF GOVERNORS OF THE FEDERAL RESERVE SYSTEM

TIME AND DATE: 11:30 a.m., Thursday, December 16, 1993.

PLACE: Marriner S. Eccles Federal Reserve Board Building, C Street entrance between 20th and 21st Streets, NW., Washington, DC 20551.

STATUS: Open.

MATTERS TO BE CONSIDERED:

1. Notice of proposed rulemaking and advance notice of proposed rulemaking regarding the regulatory capital treatment of recourse arrangements and direct credit substitutes.

2. Any items carried forward from a previously announced meeting.

Note: This meeting will be recorded for the benefit of those unable to attend. Cassettes will be available for listening in the Board's Freedom of Information Office, and copies may be ordered for $5 per cassette by calling (202) 452–3684 or by writing to: Freedom of Information Office, Board of Governors of the Federal Reserve System, Washington, DC 20551.

CONTACT PERSON FOR MORE INFORMATION: Mr. Joseph R. Coyne, Assistant to the Board; (202) 452–3204.

Dated: December 9, 1993.

Jennifer J. Johnson,

Associate Secretary of the Board.

[FR Doc. 93–30478 Filed 12–9–93; 2:42 pm]

BILLING CODE 6210–01–P

FEDERAL TRADE COMMISSION

TIME AND DATE: 10:00 a.m., Monday, January 10, 1994.

PLACE: Federal Trade Commission Building, room 532, 6th Street and Pennsylvania Avenue, NW., Washington, DC 20580.

STATUS: Parts of this meeting will be open to the public. The rest of the meeting will be closed to the public.

MATTERS TO BE CONSIDERED: Portions Open to Public:

(1) Oral Argument in Stouffer Foods Corporation, Docket 9250

Portions Closed to the Public:

(2) Executive Session to follow Oral Argument in Stouffer Foods Corporation, Docket 9250

CONTACT PERSON FOR MORE INFORMATION: Bonnie Jansen, Office of Public Affairs: (202) 326–2180, Recorded Message: (202) 326–2711.

Donald S. Clark,

Secretary.

[FR Doc. 93–30418 Filed 12–9–93; 9:54 am]

BILLING CODE 6750–01–M

LEGAL SERVICES CORPORATION

Board of Directors Presidential Search Committee; Hearing

TIME AND DATE: A meeting of the Legal Services Corporation Board of Directors Presidential Search Committee will be held on December 18, 1993. The meeting will commence at 11:00 a.m.

PLACE: The Legal Services Corporation, 750 1st Street, NE., 11th Floor, The Board Room, Washington, DC 20002, (202) 336–8800.

STATUS OF MEETING: Open.

The Committee would appreciate receipt of public comment in the three categories identified at items three through five of the agenda set forth below. Speakers should be prepared to provide comments on each category separately. Individuals who wish to comment but will be unable to attend the hearing are requested to submit their comments in writing, by category, to: Patricia Batie, Corporate Secretary, the Legal Services Corporation, 750 1st Street, NE., Washington, DC 20002.

MATTERS TO BE CONSIDERED:

Open Session:

1. Approval of Agenda.
2. Receipt and Consideration of Presentation of Background for Presidential Search.
3. Receipt and Consideration of Public Comment Regarding A Job Description for the Office of Corporation President.
4. Receipt and Consideration of Public Comment Regarding the Qualifications of Persons to be Considered in Selecting the Corporation President.
5. Receipt and Consideration of Public Comment Regarding the Process to be Utilized for Selecting the Corporation President.

CONTACT PERSON FOR INFORMATION: Patricia D. Batie, Executive Office, (202) 336–8800.

Upon request, meeting notices will be made available in alternate formats to accommodate visual and hearing impairments.

• Individuals who have a disability and need an accommodation to attend the meeting may notify Patricia Batie at (202) 336–8800.

Date issued: December 9, 1993.

Patricia D. Batie,

Corporate Secretary.

[FR Doc. 93–30503 Filed 12–9–93; 3:21 pm]

BILLING CODE 7050–01–M

Corrections

Federal Register
Vol. 58, No. 237
Monday, December 13, 1993

This section of the FEDERAL REGISTER contains editorial corrections of previously published Presidential, Rule, Proposed Rule, and Notice documents. These corrections are prepared by the Office of the Federal Register. Agency prepared corrections are issued as signed documents and appear in the appropriate document categories elsewhere in the issue.

DEPARTMENT OF HEALTH AND HUMAN SERVICES

Social Security Administration

20 CFR Part 404

[Regulations No. 4]
RIN 0960-None Assigned

Federal Old-Age, Survivors and Disability Insurance; Determining Disability and Blindness; Extension of Expiration Dates for Various Body System Listings

Correction

In rule document 93-29651 beginning on page 64121 in the issue of Monday, December 6, 1993, make the following correction:

On page 64123, in the first column, in the authority for subpart P, in the second line from the bottom, "442(c)" should read "422(c)".

BILLING CODE 1505-01-D

OFFICE OF PERSONNEL MANAGEMENT

5 CFR Part 831

RIN 3206-AF67

Civil Service Retirement System; Law Enforcement Officers and Firefighters

Correction

In rule document 93-29725 beginning on page 64366 in the issue of Tuesday, December 7, 1993, make the following correction:

On page 64366, in the third column, in the second full paragraph, in the second line from the bottom, insert "not" after "have".

BILLING CODE 1505-01-D

DEPARTMENT OF TRANSPORTATION

Coast Guard

46 CFR Part 67

[CGD 89-007; CGD 89-007a]

RIN 2115-AD60

Documentation of Vessels; Recording of Instruments; Fees

Correction

In rule document 93-27840 beginning on page 60256 in the issue of Monday, November 15, 1993, make the following corrections:

§ 67.550 [Corrected]

On page 60284, in § 67.550, in the table, in the third column, the fee for the three entries under "Filing and recording:" now reading "18.00", "14.00" and "18.00" should read "8.00(1), "4.00(1)" and "8.00(1)".

BILLING CODE 1505-01-D

federal register

Monday
December 13, 1993

Part II

Department of the Interior

Bureau of Indian Affairs

25 CFR Part 262
Protection of Archaeological Resources; Rule

DEPARTMENT OF THE INTERIOR

Bureau of Indian Affairs

25 CFR Part 262

RIN 1076–AC–23

Protection of Archaeological Resources

AGENCY: Bureau of Indian Affairs, Interior.

ACTION: Final rule.

SUMMARY: The Bureau of Indian Affairs (BIA) is adding a part on the protection of archaeological resources to Chapter I. The intent, in response to direction in the Archaeological Resources Protection Act of 1979 and consistent with governmentwide uniform regulations, is to establish regulations detailing the BIA's carrying out of its functions and authorities under the Act.

EFFECTIVE DATE: June 13, 1994.

FOR FURTHER INFORMATION CONTACT: Donald R. Sutherland, Environmental Services Staff, Bureau of Indian Affairs, MS 4544, 1849 C Street NW., Washington, DC 20240, telephone number (202) 208–4791.

SUPPLEMENTARY INFORMATION: This rule is published in exercise of authority delegated by the Secretary of the Interior to the Assistant Secretary—Indian Affairs by 209 DM 8.

Background

The Archaeological Resources Protection Act of 1979 ("Act"; Public Law 96–95; 93 Stat. 721; 16 U.S.C. 470aa-ll) was enacted primarily to protect archaeological resources that are on public lands and Indian lands. To meet this purpose, the Act: (1) Restricts access to archaeological resources on such lands to qualified persons whose intentions are to further archaeological knowledge in the public interest, and requires them to have a permit from the Federal land manager in order to do so, and (2) prescribes civil and criminal penalties for persons who excavate or remove archaeological resources on public or Indian lands without a permit.

Section 10(a) of the Act charged the Secretaries of the Interior, Agriculture and Defense, and the Chairman of the Board of the Tennessee Valley Authority with promulgating basic governmentwide implementing regulations. The resulting uniform regulations were published as a final rule in 48 FR 1016 on January 6, 1984, and can be found at 43 CFR part 7, 36 CFR part 296, 32 CFR part 229 or 18 CFR part 1312. Section 10(b) of the Act charged all Federal agencies with promulgating "such rules and regulations, consistent with the uniform rules and regulations—as may be appropriate for the carrying out of (their) functions and authorities under this Act."

Pursuant to section 10(b) of the Act, the Department of the Interior issued the supplemental final rule, 43 CFR part 7, subpart B.

This rule covers: (1) Definitions specific to the Department of the Interior, (2) the determination of loss or absence of archaeological interest, (3) permitting procedures relating to Indian lands, (4) permit appeals, and (5) dispute and hearings and appeals procedures.

In order to carry out its functions and authorities under the Act, the BIA finds it appropriate to promulgate regulations pursuant to section 10(b). The areas covered include: (1) Consultation to determine need for a permit, (2) permit requirements for Indian tribes and individuals, (3) applications for permits, (4) landowner consent by the Secretary, (5) notification to Indian tribes of possible harm to, or destruction of, sites having religious or cultural importance, and (6) custody of archaeological resources. For other elements of the Act, such as civil penalties and hearings and appeals, the BIA adheres to the procedures in the uniform regulations and in the Department of the Interior supplemental regulations at 43 CFR part 7, subpart B. Those regulations also provide definitions applicable to this final rule.

Proposed regulations were published in the **Federal Register** on January 25, 1990 (55 FR 2580). The period for public comment closed on February 26, 1990. Ten Indian tribes, four BIA Area Offices and one Agency, one state agency, one law firm with tribal clients, one pan-Indian organization, and one historic preservation consultant responded in writing. A section-by-section discussion of their comments and of subsequent changes in the proposed rule is set forth below.

Discussion of Comments and Changes

Supplementary Information

One commentor found the discussion of individually owned Indian lands under item (3) in the supplementary information to be confusing. The purpose of this discussion was to point out that by using the term "allotted lands," the permitting procedures for Indian lands in the Department of the Interior's supplemental regulations at 43 CFR 7.35 do not include all lands that are covered by the definition in the Act. The definition in section 3(4) of the Act includes all lands of individual Indians that are either held in trust by the United States or subject to a restriction against alienation imposed by the United States. Not all such lands are "allotted lands."

The proposed rule sought to correct this problem by avoiding the term "allotted lands" and using the term "individually owned Indian lands" to encompass all of the lands of Indian individuals included under the Act's definition of Indian lands. This has been replaced in the final rule by the term "lands of Indian individuals," in order to match the wording used in the Act. To clarify the usage of this and other terms not already defined in the regulations at 43 CFR part 7, a section (262.2) on definitions has been added to the rule.

Section 262.2 Consultation to Determine Need for a Permit. (Renumbered 262.3)

Six commentors addressed this section. Of these, three suggested it would be administratively more efficient to have permit applicants consult with tribes prior to, or simultaneously with, consulting with BIA Area Directors. The section has consequently been changed to require that tribes be consulted with first. Other changes reflect minor adjustments in wording recommended by two of the commentors.

One commentor suggested providing a means in this section whereby the documented outcome of consultation under section 106 of the National Historic Preservation Act of 1966 (Pub. L. 89–665; 80 Stat. 915; 16 U.S.C 470), as amended, could serve as a permit. Its objective would be to eliminate duplication of effort between the section 106 and permit application processes.

In response to this suggestion, a provision allowing contracts to double as permits has been added as § 262.5(f) to this rule. Section 106 consultation agreements are seldom linked to specific researchers, thus are usually activated via contracts that incorporate consultation documents. Where no contract is involved, such documents may certainly be submitted as part of the documentation required in a permit application.

One other commentor expressed the view that lands covered by this section should include all of those within the exterior boundaries of any Federally recognized Indian reservation. This view could not be accommodated within this rule, as the rule is bound by the definition in the Act of Indian lands.

Section 262.3 Permit Requirements for Indian Tribes and Individuals. (Renumbered 262.4 and Renamed, "Activities by Indian Tribes or Individuals That Require a Permit.")

Eight commentors addressed this section. Most questioned the provision in § 262.3(c) allowing a permanent employee of an Indian tribe who was not a member of that tribe to excavate or remove archaeological resources without a permit under the Act, if the work performed was an official undertaking of the tribe. Questioning focused on the rationale for limiting this provision to permanent employees. Doubt, however, was also expressed over construing the exemptions in section 4(g)(1) of the Act to apply to anyone who is not actually a tribal member.

The reasoning behind the provision was that a tribe acts through its agents, and these agents, whether tribal members or not, are covered by the tribe's exemption from the permitting requirements of the Act. Tribal employees were distinguished from consultants because liability for the actions of the former rests primarily with the employer. The latter, being self employed, are more apt to be held liable for their own actions.

In reconsidering the premise behind the provision, an analogy was sought in the role of the Federal government vis-a-vis its agents. That the Federal government is exempt from the permit requirements of the Act is obvious from the fact that it is the permitting authority. Yet, its own agents may not excavate or remove archaeological resources from public lands without a permit. They are only granted relief, and this by regulation, from having to follow formal application procedures.

As a result of this reconsideration, a strict interpretation of section 4(g)(1) of the Act has been reapplied and the provision in § 262.3(c) of the proposed rule deleted. Replacement § 262.4(c), however, (1) makes expedited means of obtaining permits similar to those for Federal employees available to tribal employees; (2) affirms that the expedited means for obtaining permits in § 262.5(f) are available to persons serving as agents for Indian tribes by contractual agreement; and (3) provides expedited means by which agents for tribes may meet the consultation requirement in § 262.3(b) to determine the need for a permit. The distinction between tribal employees and persons serving tribes by contractual agreement is, by reason of differing liability, regarded as qualitative and therefore retained.

One commentor on proposed § 262.3 declaimed the right of the Federal government to issue permits at all on lands under tribal jurisdiction, which is a statutory matter that cannot be addressed at the rulemaking level. The remaining commentors suggested minor wording changes. These have been taken into account.

Section 262.4 Application for Permits. (Renumbered 262.5)

Six commentors addressed this section. Of these, two raised questions about delegating permitting authority (§ 262.4(a)) to Agency Superintendents who lacked appropriate professional staff. A requirement that adequate professional support be available has therefore been added to the provision.

Two comments also suggested changing the language in proposed § 262.4(c)(3); one to require tribal as well as landowner consent before removing archaeological resources from the exterior boundaries of a reservation, the other to permit human remains, grave goods and religious objects to be dealt with differently than other archaeological resources. A new § 262.5(d), plus revisions elsewhere in the rule in response to the Native American Grave Protection and Repatriation Act (Pub. L. 101–601), which had not become law when the proposed rule was published, accommodate the second suggestion. The first is treated in the discussion in § 262.7.

Another commentor noted, in reference to § 262.4(c)(2), that tribal permits should be taken as conclusive evidence of tribal consent to issuance of a permit under the Act. Wording to this effect has been added to the section. A new provision allowing tribal permits, contractual agreements with tribes, and contractual agreements with the BIA to serve as permit documents under the Act has also been added as § 262.5(f). Tribes issuing permits, however, may still wish to use consent letters as a vehicle (as in § 262.5(c)(1)) for commenting on religious or cultural sites that might be affected by proposed work.

Another commentor suggested changing the wording in proposed § 262.4(c)(1) from "landowner and from the tribe having jurisdiction," to "landowner and/or from the tribe having jurisdiction." While this would more closely reflect the wording in the Act, it is not consistent with that in the uniform regulations. The change, therefore, is beyond the prerogatives of the present rulemaking.

The commentor specifically wanted to eliminate possible complications in obtaining tribal consent for permits on Indian lands outside of the boundaries of a reservation. Where these are allotted lands over which tribal jurisdiction has not been established, however, no tribal consent is required. Where the lands are under tribal jurisdiction, and fall within the territory of more than one BIA Area Office, the question of which of these will administer permitting under the Act would best be resolved by agreement among the offices involved.

This commentor also took the position that the phrase "appropriate terms and conditions" in the second sentence of § 262.4(c)(1) failed to make it clear that the terms and conditions could not conflict with the Act or its various implementing regulations. Actually, the uniform regulations at 43 CFR 7.9(c) simply state that permits include "such terms and conditions as may be requested." Indian tribes and landowners would appear to be able to request any terms and conditions they wish.

To be consistent with the uniform regulations and to eliminate any hint of limitation on the terms and conditions that may be requested, the word "appropriate" has been deleted from what is now § 262.5(c)(1). A new paragraph, 262.5(c)(1)(v), provides direction for cases where such terms and conditions are in conflict with the Act and its implementing regulations. Permit applicants should, however, be prepared to accept that there might be times when the terms and conditions an Indian tribe or landowner chooses to request—which are, of course, conditions on granting consent to a permit—make it impossible to issue the permit.

Finally, one commentor suggested establishing a time limit for Area Director response to permit applications. A response time of 15 days has therefore been established at § 262.5(g). It should be noted, however, that while this strongly implies that a permit be issued within that time, it does not actually require such. The Area Director must have the flexibility to accommodate situations where there are complications relating to the permit application, such as requests for terms and conditions that are in conflict with the provisions of the Act.

Section 262.5 Landowner Consent by the Secretary. (Renumbered 262.6)

Only three commentors addressed this section. Two wanted proposed § 262.5(d) to include measures, such as a time frame for seeking or a threshold at which multiple landowners are too numerous for it to be practical to obtain

their consent to a permit, to ensure that the Area Director makes a good faith effort to contact such landowners prior to invoking Secretarial consent on their behalf. The other believed that the authority to grant this consent should reside in the tribal council rather than with the Secretary.

As noted in the preamble to the proposed rule, the provisions in this section are consistent with those already in use for other realty-related actions (25 CFR 162.2 and 169.3). Those do not contain criteria for when to invoke Secretarial consent on behalf of multiple landowners, and adding such criteria is more likely to hinder than to help in making this decision, in view of the wide variety of circumstances that might occur. The only change made in proposed § 262.5(d) in regard to measuring good faith effort to contact multiple landowners, then, is the added requirement that this effort be documented.

In regard to where the authority to grant consent on behalf of landowners rests, it is the Secretary, not the tribal council, who is the trustee for the land. This is beyond the authority of this rulemaking, or the Secretary, to alter. A provision has been added to § 262.5(d), however, requiring the Secretary to notify the tribe (if any) having jurisdiction over the land and allow time for response prior to granting such consent.

Section 262.6 Notification to Indian Tribes of Possible Harm To, or Destruction Of, Sites Having Religious or Cultural Importance. (Renumbered 262.7)

The single commentor on this section argued that giving a tribe only one chance to address its cultural or religious sites that might be harmed by issuance of a permit placed, in effect, an unreasonable responsibility on the tribe to stay aware of "all" such sites. The commentor suggested that the section provide for additional consultation where previously unknown cultural or religious sites, such as burials, are revealed after a permit has been issued. As this is already possible via terms and conditions that may be included in a permit, and as notification requirements in the proposed rule are consistent with those in the uniform regulations, the section has been left unchanged.

Section 262.7 Custody of Archaeological Resources. (Renumbered 262.8)

Six commentors addressed this section. Of these, two questioned the reliance in proposed § 262.7(a) on principles of Anglo-American law rather than tribal customary law in treating archaeological resources excavated or removed from lands of Indian individuals as property of the landowner(s). They referred especially to religious artifacts, which might be considered tribal patrimony, and to human remains and grave goods, for which they found the concept of "ownership" inappropriate under either legal tradition.

The legal principles applied in this rule to the ownership of archaeological resources are, and must remain, the same as those governing the Secretary in other realty matters, such as mineral rights or land ownership itself, on Indian lands. The broader issue of tribal versus individual Indian rights with respect to allotted lands is beyond the scope of this rulemaking.

The situation with regard to religious artifacts, human remains, and grave goods, however, has changed since publication of the proposed rule. Passage of the Native American Grave Protection and Repatriation Act (Pub. L. 101–601) now provides a priority system for determining the ownership or control of such, as this act defines them, "cultural items." This rule has been revised, where applicable, to accommodate that system.

The same commentors, plus one other, also argued, in relation to proposed § 262.7(b), that not issuing a permit unless the Indian landowner consents to release the archaeological resources for curation or study unduly restricts both archaeological opportunities and the right of the Indian landowner to choose what to release. Neither is the case. The argument apparently overlooks the fact that the provision refers only to resources recovered. Indian landowners retain the full right to restrict, via terms and conditions in the permit, what is recovered; and permit applicants remain free to decide whether or not they can conduct scientifically viable work under the conditions imposed.

Of course, as noted earlier, when the terms and conditions requested for inclusion in a permit make it impossible to do archaeological work in a manner consistent with the purposes of the Act, it may not be possible to issue the permit. A project where some things are left unexcavated, for example, might be acceptable. One where what is recovered is never properly studied probably would not. Section 262.5(c)(1)(v) of this rule provides for negotiation under, but does not preclude, such an eventuality.

Another argument questioned the assumption in § 262.7 (b) and (c) that the excavation or removal of archaeological resources where some might be sold, exchanged, or transferred to someone other than a qualified curatorial institution would always be contrary to the public interest. Selling tons of excavated and analyzed clam shells to a feed company, for example, may not be. In such a case, however, procedures at 3 CFR 7.33 allow the materials to be declared no longer of archaeological interest. The basic assumption remains valid.

On a more basic issue, two commentors viewed denial of a permit under proposed § 262.7(c) as an infringement on the right of Indian landowners to dispose of their property as they wish. Actually, this section is aimed at the fact that archaeological resources recovered from Indian lands under a permit and retained by the landowner may, because they were obtained legally, be sold or exchanged without violating the Act. Resources recovered from public or Indian lands without a permit, on the other hand, may not be; and curation requirements effectively prevent those recovered legally, except where retained by Indian landowners, from being sold.

It is not the intent of what is now § 262.8(c) to limit what Indians may do with their archaeological resources. It is to reduce the chance that an archaeologist with a BIA-issued permit might become the unwitting vehicle by which those that reach the antiquities market are removed from the ground.

Other comments relating to proposed § 262.7: (1) Asked whether the BIA must comply with 36 CFR part 79 in cases where archaeological resources are retained by Indian landowners; (2) suggested that a mechanism be added for resolving conflicts between Indian tribes and individuals over the ultimate disposition of such resources, and also for those over terms and conditions to be included in a permit; and (3) recommended that the tribe having jurisdiction over the land in question be included in decisions to decline issuance of a permit and in agreements on the study, storage or distribution of archaeological resources, or on their removal beyond the exterior boundaries of the reservation.

In response to the first, archaeological resources retained by Indian landowners are no longer the responsibility of the BIA. It therefore follows that agreements concerning, and conflicts between Indian tribes and individuals over the ultimate disposition of, such resources are beyond both the jurisdiction of the BIA and the scope of this rulemaking. With regard to conflicts over terms and conditions to be included in permits

and to decisions under proposed § 262.7(c) not to issue a permit, the rule has been revised, where applicable, to provide for consultation with Indian tribes and/or individuals.

Compliance With Other Authorities and Authorship

This rule has been reviewed under Executive Order 12866. In addition, the Department of the Interior has determined that this rule will not have a significant economic impact on a substantial number of small entities under the Regulatory Flexibility Act (5 U.S.C. 601 *et seq.*). The reason for this determination is that the proposed regulations are primarily directed toward the management of Federal resources, with negligible impact on the general public. Furthermore, the rulemaking merely adds detail to the existing, uniform regulations.

The Department of the Interior has determined that this proposed rulemaking does not constitute a major Federal action significantly affecting the quality of the human environment and that no detailed statement is required pursuant to the National Environmental Policy Act of 1969.

The information collection requirements contained in part 262 do not require approval by the Office of Management and Budget under 44 U.S.C. 3501 *et seq.*

The primary author of this document is Donald R. Sutherland, Archaeologist, Environmental Services Staff, Office of Trust and Economic Development, Bureau of Indian Affairs.

There is no Federal Domestic Assistance number for these regulations.

List of Subjects in 25 CFR Part 262

Historic preservation, Monuments and memorials, Antiquities, Archaeology.

For the reasons set forth in the preamble: Title 25, chapter 1 of the Code of Federal Regulations is amended by adding a new part 262 to read as follows:

PART 262—PROTECTION OF ARCHAEOLOGICAL RESOURCES

Sec.

262.1 Purpose, scope and information collection.
262.2 Definitions.
262.3 Consultation to determine need for a permit.
262.4 Activities by Indian tribes or individuals that require a permit.
262.5 Application for permits.
262.6 Landowner consent by the Secretary.
262.7 Notice to Indian tribes of possible harm to cultural or religious sites.
262.8 Custody of archaeological resources.

Authority: 16 U.S.C. 470aa–11.

Cross Reference: For uniform regulations issued by the Departments of Agriculture, Defense, and the Interior and the Tennessee Valley Authority pertaining to the protection of archaeological resources, and for supplemental regulations issued by the Department of the Interior pertaining to the same, see 43 CFR part 7, subparts A and B.

§ 262.1 Purpose, scope and information collection.

(a) *Purpose and scope.* The purpose of this part is to implement certain provisions of the Archaeological Resources Protection Act (Act) of 1979 (16 U.S.C. 470aa–11), in accordance with section 10(b) and consistent with uniform regulations promulgated under section 10(a) by the Secretaries of the Interior, Agriculture, and Defense and the Chairman of the Board of the Tennessee Valley Authority (43 CFR part 7, 36 CFR part 296, 32 CFR parts 229 and 1312) on February 6, 1984. This part shall provide guidance to officials of the Bureau of Indian Affairs (BIA) on the implementation of the Act as it pertains to this agency.

(b) *Information collection.* The information collection requirements contained in § 262.5 do not require approval by the Office of Management and Budget under 44 U.S.C. 3501 *et seq.*

§ 262.2 Definitions.

As used for purposes of this part:

(a) *Funerary objects* means objects that, as a part of the death rite or ceremony of a culture, are reasonably believed to have been placed with human remains of Indians either at the time of death or later, or to have been made exclusively for burial purposes or to contain such remains.

(b) *Sacred objects* means specific ceremonial objects that are needed by traditional Indian religious leaders for the practice of traditional Indian religions by their present day adherents.

(c) *Object of cultural patrimony* means an object having ongoing historical, traditional, or cultural importance central to an Indian tribe itself and that shall have been considered inalienable by the tribe at the time the object was separated therefrom.

(d) *Indian individual* means:

(1) Any person who is an enrolled member of a Federally recognized Indian tribe;

(2) Any person who is a descendent of such a member and was, on June 1, 1934, physically residing within the present boundaries of any Indian reservation; or

(3) Any other person of one-half or more Indian blood of tribes indigenous to the United States.

(e) *Lands of Indian tribes* means land or any interest therein:

(1) The title to which is held in trust by the United States for an Indian tribe; or

(2) The title to which is held by an Indian tribe, but which cannot be alienated or encumbered by the owner without the approval of the Secretary because of limitations contained in the conveyance instrument pursuant to Federal law or because of a Federal law directly imposing such restrictions.

(f) *Lands of Indian individuals* means land or any interest therein:

(1) The title to which is held in trust by the United States for the benefit of Indian individuals; or

(2) The title to which is held by Indian individuals, but which cannot be alienated or encumbered by the owner without the approval of the Secretary because of limitations contained in the conveyance instrument pursuant to Federal law or because of a Federal law directly imposing such restrictions.

§ 262.3 Consultation to determine need for a permit.

(a) Any person, except as provided in the uniform regulations at 43 CFR 7.5(b) through (d), who proposes to excavate or remove archaeological resources on Indian lands or on properties owned or administered by the BIA must first apply for and secure a permit under the Act. Procedures relating thereto are set forth in § 262.5 of this part.

(b) No permit under the Act, nor any other Federally issued license or authorization, is required for archaeological investigations that do not involve the excavation or removal of archaeological resources on these lands, except for BIA consent on properties that it owns or administers. Notwithstanding, persons other than those covered under 43 CFR 7.5(b) through (d) shall, before engaging in such investigations:

(1) Write to the head of each tribal government having jurisdiction over the lands where investigations are to be conducted and request that he or she provide, within 30 days, written information on any permit, license or other form of authorization the tribe might require for the work proposed; and

(2) Provide the BIA Area Director with a copy of the tribe's written response (or a copy of the request to the tribe if 30 days have elapsed without any response) plus a brief but clear written description of the proposed work and obtain his or her written determination as to whether or not a permit under the Act is required. Area Directors shall provide determinations within 10

working days after receiving such documentation.

§ 262.4 Activities by Indian tribes or individuals that require a permit.

(a) No Indian tribe may, without a permit under the Act, excavate or remove archaeological resources on:

(1) Lands of another Indian tribe; or

(2) Lands of Indian individuals, except those on which the law of that tribe regulates such activity.

(b) No individual Indian may, without a permit under the Act, excavate or remove archaeological resources on any Indian lands (including his or her own) other than those on which the law of the tribe of which he or she is a member regulates such activity.

(c) No person, as an employee, consultant, advisor or in any other capacity as an agent for any Indian tribe, shall be exempt from the permit requirements of the Act, except in the cases listed below:

(1) No permit shall be required if a person is a member of the tribe having jurisdiction over the resources in question and the law of that tribe regulates the excavation or removal of archaeological resources on its lands.

(2) Tribal employees need not submit permit applications to the BIA if:

(i) The proposed excavation or removal of archaeological resources is within the normal scope of their duties or otherwise carried out by direction of the tribal government;

(ii) The work is on Indian lands of the tribe or on which the law of that tribe regulates the excavation or removal of archaeological resources;

(iii) The tribe ensures that the provisions for permit issuance in this part and at 43 CFR part 7 have been met by other documented means; and

(iv) Before beginning the work, the tribe notifies the Area Director about the nature and location of the proposed work and allows 10 working days after mailing a notification or 5 working days after an oral notification (provided this is documented) for the Area Director to respond. The Area Director need only respond when action is required under § 262.7 of this part, and may do so either in writing or, if documented, orally.

(3) Consultants, advisors, and others serving by contractual agreement as agents for Indian tribes may use the provisions in § 262.5(f) of this part to expedite the process of obtaining a permit.

(4) Persons serving as agents for Indian tribes as employees or by contractual agreement may abbreviate the consultation required in § 262.3(b) of this part by disregarding the requirement to consult first with the tribe and, provided the communication is documented, by consulting with the Area Director orally. In these cases, the Area Director need only respond when a permit is deemed necessary and may do so either orally or in writing. If a response is not received within 3 working days after an oral description of the proposed work is made or within 7 working days after a written description is mailed to the Area Director, the work may proceed.

§ 262.5 Application for permits.

(a) Permits from the BIA shall be issued when an applicant meets the requirements set out in 43 CFR 7.8, and may be conditioned, modified, suspended, or revoked by the Area Director. Area Directors may delegate this authority to Agency Superintendents, but only on a permit-by-permit basis and only to those who have adequate professional support available.

(b) Prospective applicants may obtain details on how to apply for a permit by contacting the Area Director, at BIA Area Offices in: Aberdeen, SD; Albuquerque, NM; Anadarko, OK; Arlington, VA; Billings, MT; Gallup, NM; Juneau, AK; Minneapolis, MN; Muskogee, OK; Phoenix, AZ; Portland, OR; or Sacramento, CA; or by writing to the Deputy Commissioner of Indian Affairs, Department of the Interior, Washington, DC 20240.

(c) Permit applications proposing the excavation or removal of archaeological resources on Indian lands shall include the following consent documents:

(1) Written permission from the Indian landowner and from the tribe, if any, having jurisdiction over those lands. This must contain such terms and conditions as the landowner or tribe may request be included in the permit. Where the permission is from a tribe, it should either state that no religious or cultural site will be harmed or destroyed by the proposed work or specify terms and conditions that the permit must include in order to safeguard against such harm or destruction.

(i) For lands of Indian tribes, permission must be granted by the tribe.

(ii) For lands of Indian individuals not under tribal jurisdiction, permission must be granted by the owner(s), except as provided in § 262.6.

(iii) For lands of Indian individuals under tribal jurisdiction, permission must be granted by both the owner(s), except as provided in § 262.6, and the tribe having such jurisdiction. Where an applicant is the owner, consent must still be obtained from the tribe.

(iv) Where the ownership of lands of Indian individuals is multiple, permission must be granted by the owners of a majority of interests, except as provided in § 262.6. The same shall apply where the applicant is one of the owners.

(v) Where the terms and conditions a tribe or landowner requests be included in a permit are in conflict with the provisions of this or any other Act, with Federal regulations, or with each other, the Area Director may negotiate with the requestor to eliminate the conflict. If the conflict remains, the permit may not be issued.

(2) Copies of any permits required by tribal law for archaeological work on lands under tribal jurisdiction. This may serve as written consent from the tribe for the purposes of § 262.5(c)(1).

(3) Written agreement by the Indian landowner(s) to release archaeological resources for curation or study, as specified in § 262.8(b).

(d) Permits issued by the BIA shall include the following or similar condition: "Human remains of Indians, funerary objects, sacred objects, and objects of cultural patrimony may not be excavated or removed unless the permittee has obtained the written consent of the Area Director. In order to obtain consent, the permittee shall present to the Area Director written evidence of prior consultation with the appropriate Indian tribe. If the lands containing the remains or objects are tribal lands, the permittee shall first obtain the written consent of the tribe having jurisdiction over the lands." Determination as to which tribe is the appropriate tribe shall be made in accordance with § 262.8(a). Area Director consent shall be based on the scientific appropriateness of the research objectives and provisions for recovery, recording, and analysis and may, if documented, be oral. This condition may be omitted from the permit when such excavation or removal is proposed, and the requirements of the condition are met, in the permit application.

(e) Information and assistance in contacting Indian tribes and individual Indian landowners for the purpose of requesting the consent documents listed under paragraph (c) of this section or of seeking the consultation and consent required under paragraph (d) of this section may be obtained from the BIA office to which the permit application is submitted.

(f) Contractual agreements with the BIA or Indian tribes and permits issued by Indian tribes may be accepted as support documents for permit applications. They may also double as

permit documents, if they demonstrate that the provisions for permit issuance in this part and at 43 CFR part 7 have been met and they are attached to a Department of the Interior permit form. This form must be signed by the Area Director, but need only contain the following or similar statement: "This permit is issued to the person(s) named, and in accordance with the terms and conditions in the attached (contractual agreement/tribal permit)."

(g) Area Directors shall respond to permit applications within 15 working days of receipt.

§ 262.6 Landowner consent by the Secretary.

The Secretary of the Interior, or delegate thereof, may, on behalf of the owner(s) of lands of Indian individuals, grant consent for the purposes in § 262.5(c) (1) and (3) when the Secretary or his or her delegate finds that such consent will not result in any injury to the land or owner(s) and when one or more of the following conditions exist:

(a) The owner is a minor or a person *non compos mentis;*

(b) The heirs or devisees of a deceased owner have not been determined;

(c) The whereabouts of the owner are unknown;

(d) Multiple owners are so numerous that the Secretary or his or her delegate finds, after documenting his or her efforts to do so, that it would be impractical to obtain their consent, as prescribed in § 262.5(c)(1)(iv) and provided the Secretary or his or her delegate also notifies, in writing, the tribe, if any, having jurisdiction over the land and allows 15 working days from the date of mailing date for response; or

(e) The owner has given the Secretary or his or her delegate written authority to grant such consent on his or her behalf.

§ 262.7 Notice to Indian tribes of possible harm to cultural or religious sites.

When consent by an Indian tribe to proposed excavation or removal of archaeological resources from Indian lands it owns or over which it has jurisdiction contains all of the information written as prescribed and advised in § 262.5(c)(1), it may be taken to mean that subject to such terms and conditions as the tribe might specify, issuance of a permit for the proposed work will not result in harm to, or destruction of, any site of religious or cultural importance. No further notification is necessary, unless the Area Director has reason to believe that the proposed work might harm or destroy a site of religious or cultural importance to another tribe or Native American group. He or she shall then follow the notification procedures at 43 CFR 7.7. Those procedures must also be followed when proposed work might affect lands of Indian individuals over which there is no tribal jurisdiction or public lands owned or administered by the BIA.

§ 262.8 Custody of archaeological resources.

(a) Archaeological resources excavated or removed from Indian lands, except for human remains of Indians, funerary objects, sacred objects and objects of cultural patrimony, remain the property of the Indian tribe or individual(s) having rights of ownership over such lands. Ownership and right of control over the disposition of the excepted items shall be in accordance with the order of priority provided in the Native American Graves Protection and Repatriation Act (Pub. L. 101–601), adapted for the purpose of this rule as follows:

(1) In the case of human remains of Indians and funerary objects, in the lineal descendants of the Indian; or

(2) In any case in which such lineal descendants cannot be ascertained, and in the case of sacred objects and objects of cultural patrimony:

(i) In the Indian tribe on whose tribal lands, or on the individual Indian lands of whose members, such remains or objects are discovered;

(ii) In the Indian tribe recognized as aboriginally occupying the public lands owned or administered by the BIA on which such remains or objects are discovered, if upon notice, that tribe states a claim for those remains or objects; or

(iii) Where it can be so demonstrated by a preponderance of evidence, in the tribe other than that in paragraph (a)(2)(i) or (ii) of this section having the strongest cultural relationship with such remains or objects, if, upon notice, that tribe states a claim for those remains or objects.

(iv) The Area Director shall provide the required notice to any Indian tribe identified under paragraph (a)(2) (ii) or (iii) of this section, in writing, within 5 working days after such identification has been documented and confirmed, and shall at the same time submit a copy of the notice for publication in the **Federal Register.** This notice shall include a description of the remains or objects; of where, how, and why they were excavated or removed; and of the evidence used to identify the tribe being notified. The remains or objects in question shall be considered the property of the pertinent tribe under paragraph (a)(2)(i) of this section or, in the case of paragraph (a)(2)(ii) of this section, held and administered by the BIA until or unless a claim is stated.

(b) No permit for the excavation or removal of archaeological resources on Indian lands may be issued without the written consent of the Indian landowner(s) either to grant custody of the resources recovered (other than human remains of Indians, funerary objects, sacred objects or objects of cultural patrimony) to a curatorial facility that meets the requirements of 36 CFR part 79 or to allow the permittee a reasonable period of time to hold or have ready access to them at an appropriate location for study. The excepted remains and objects are covered under § 262.5(d) of this part which, in general, permits their excavation or removal only when the research objectives and provisions for recovery, recording, and analysis are scientifically appropriate. Written consent to custody by a curatorial facility may include terms and conditions regarding curation (e.g., cleaning, viewing, loaning, studying, etc.), provided these are consistent with 36 CFR part 79.

(1) On lands of Indian tribes, consent must be obtained from the tribe.

(2) On lands of Indian individuals, consent must be obtained from the owner of the land or the owners of a majority of interests therein, except as provided in § 262.6.

(3) Where consent is by the owners of a majority of interests, it must, if the archaeological resources are to be retained by or returned after study to the interest holders, designate a representative to receive those resources. Whether and how these are subsequently distributed among themselves is a matter for the interest holders to decide.

(c) The Area Director may, after notifying the tribe (if any) having jurisdiction over such lands and allowing 15 working days for response, decline to issue a permit for lands of Indian individuals if he or she has any verifiable reason to believe that archaeological resources retained by the landowner(s) after being studied will be sold or exchanged other than to the tribe having jurisdiction or to a curatorial facility that meets the requirements of 36 CFR part 79. The basis for decline shall be that excavation or removal of resources under such circumstances would not be in the public interest and would thus be contrary to the purposes of the Act.

(d) The landowner(s) alone may grant custody of archaeological resources (except for human remains, funerary objects, sacred objects and objects of

cultural patrimony, which are subject to the provisions of paragraph (a) of this section) excavated or removed from lands of Indian individuals that are under tribal jurisdiction to a curatorial facility that meets the requirements of 36 CFR part 79. When, however, such consignment constitutes the ultimate disposition of these resources, the tribe having jurisdiction must also grant its consent. Any subsequent exchange or disposition by the facility must have the consent of both the landowner(s) and the tribe.

Dated: September 17, 1993.

Ada E. Deer,

Assistant Secretary—Indian Affairs.

[FR Doc. 93–30203 Filed 12–10–93; 8:45 am]

BILLING CODE 4310–02–P

federal register

Monday
December 13, 1993

Part III

Department of Agriculture

Food Safety and Inspection Service

9 CFR Part 318, et al.
Accreditation Fees, Standards, and Procedures for FSIS Accredited Laboratories; Final Rule

DEPARTMENT OF AGRICULTURE

Food Safety and Inspection Service

9 CFR Parts 318, 381, and 391

[Docket No. 92–002F]

RIN 0583–AB49

Accreditation Fees, Standards, and Procedures for FSIS Accredited Laboratories

AGENCY: Food Safety and Inspection Service, USDA.

ACTION: Final rule.

SUMMARY: The Food Safety and Inspection Service (FSIS) is amending the Federal meat and poultry products inspection regulations to establish user fees and adjust the standards and procedures for the accreditation of non-Federal analytical chemistry laboratories. The Agency's Accredited Laboratory Program (ALP) qualifies non-Federal analytical laboratories to conduct analysis of official meat and poultry samples. These laboratories provide the Agency and the regulated industry with an alternative to reliance on FSIS's own laboratories and often permit more timely analytical results that could otherwise be possible. Accredited laboratories analyze meat and poultry samples for moisture, protein, fat, and salt content and/or certain chemical residues. User fees, which will cover the costs of the FSIS Accredited Laboratory Program, are mandated by the Food, Agriculture, Conservation, and Trade Act of 1990 (the 1990 Farm Bill), as amended.

EFFECTIVE DATE: December 13, 1993.

FOR FURTHER INFORMATION CONTACT: Dr. Jess Rajan, Chief, Quality Systems Branch, Chemistry Division, room 516–A, Annex Building, USDA, FSIS, 300 12th Street SW., Washington, DC 20250–3700, (202) 205–0679.

SUPPLEMENTARY INFORMATION:

Executive Order 12866

This final rule has been reviewed under Executive Order 12866.

Executive Order 12778

This final rule has been reviewed under Executive Order 12778, Civil Justice Reform. This rule (1) establishes user fees for non-Federal analytical chemistry laboratories accredited under the Federal Meat and Poultry Products Inspection Acts and regulations promulgated thereunder, and (2) adjusts the standards and procedures for the accreditation of such laboratories.

States and local jurisdictions are preempted under the Federal Meat Inspection Act (FMIA) and the Poultry Products Inspection Act (PPIA) from imposing any requirements with respect to federally inspected premises and facilities, and operations of such establishments, that are in addition to, or different than, those imposed under the FMIA or PPIA. States and local jurisdictions are also preempted under the FMIA and PPIA from imposing any marking, labeling, packaging, or ingredient requirements on federally inspected meat or poultry products that are in addition to, or different than, those imposed under the FMIA or the PPIA, as well as preempted from imposing, under the PPIA for poultry products, certain storage and handling requirements. States and local jurisdictions may, however, exercise concurrent jurisdiction over meat and poultry products that are outside official establishments for the purpose of preventing the distribution of meat or poultry products that are misbranded or adulterated under the FMIA or PPIA or, in the case of imported articles, which are not at such an establishment, after their entry into the United States. States and local jurisdictions may also make requirements or take other actions, that are consistent with the FMIA and PPIA, with respect to any other matters regulated under the FMIA and PPIA.

Under the FMIA and the PPIA, States that maintain meat and poultry inspection programs must impose requirements that are at least equal to those required under the FMIA or PPIA. These States may, however, impose more stringent requirements on such State-inspected products and establishments.

This final rule will have no retroactive effect and applicable administrative procedures must be exhausted before any judicial challenge to the application of these provisions. Those administrative procedures are set forth in 9 CFR 306.5, 318.21(h), 381.35, and 381.153(h).

Effect on Small Entities

Most of the entities accredited by FSIS that will be affected by this final rule are large, independent laboratories or official meat packing establishments or States that own or operate accredited laboratories.

There are currently approximately 240 laboratories in the FSIS accredited laboratory program. About three quarters of these are large entities, with respect to the volume of business, or part of such entities as large business corporations, State universities, or State governments. These laboratories provide analytical services to large and small establishments for analysis of official samples.

Participation in the Agency's Accredited Laboratory Program is voluntary. The principal burdens of the final rule on laboratories will be the fee charged for FSIS accreditation ($3,500 per accreditation, of which a laboratory may have more than one) and the minimal billing and accounting costs.

Some large laboratories have multiple accreditations for food chemistry and chemical residues, while many small laboratories are accredited only for food chemistry. Thus, smaller laboratories (small entities) will be expected to pay smaller amounts of accreditation fees than large laboratories. Balanced against these costs are the revenues from analyzing official samples, which are likely to be greater because firms can be expected to pass much of the costs of obtaining accreditation to clients, and the enhancement of income from other services provided by the laboratories because of their status as "accredited by FSIS." As a result, the net effect of this rulemaking on both small and large laboratories will not be significant. The user-fee cost increments for having official samples analyzed by accredited laboratories are likely to be passed on to the establishments doing business with accredited laboratories, or absorbed by the official establishment if the establishment has an in-house accredited laboratory. Establishments using the laboratories will continue to benefit from the earlier marketing of product released from official retention. Overall benefits to the meat and poultry industry, including both small and large establishments, from using accredited laboratories are not expected to change significantly.

Small laboratories that do very little analysis (15 or fewer analyses a year) of official samples may choose to discontinue participating in the ALP. It is expected that a decision to participate would be based on a calculation of the benefits and costs to the firm, including a determination whether the resulting loss of business from not participating in the ALP would be significant.

As a result of nonparticipation in the ALP by some small laboratories, small official establishments doing business with these laboratories would have to seek other facilities for the analysis of official samples. However, there would be relatively few instances of this for small establishments because, by their nature, small establishments rely primarily on FSIS laboratories and seek little assistance from accredited laboratories for the analysis of official samples.

If some of these small accredited laboratories were no longer available, the establishments could, and likely would, have samples tested by other accredited laboratories, such as those operated by States. The Agency is unaware of any cases in which such alternate arrangements could not be made. The affected establishments would still be able to exercise the option of having samples tested at their own expense so that product found to be in compliance with Federal regulations could be released into commerce sooner than it could if the establishments had samples mailed to an analyzed by FSIS laboratories.

Besides the user-fee provisions, the final rule contains adjustments to the accreditation procedures and performance standards. For example, some unit names and addresses and some operational procedures are being changed to conform with Agency practice. Also, the statistical evaluation criteria for determining the effectiveness and consistency of laboratory analytical processes are being adjusted on the basis of comparison data accumulated and analyzed. The Agency is providing, through the final rule, a more equitable and efficient way of determining the qualifications of laboratories in the program. The changes made by the final rule will, by way of providing clearer explanations of the requirements for participation in the program as well as providing more accurate and up-to-date performance criteria, reduce the need for administrative consultations, and increase operational efficiencies in both laboratories and the Agency. The cost savings of such improved efficiencies are likely to be small in most cases, however.

For the reasons given above, the effects of the final rule on the accredited laboratories and on the establishments they serve will not be significant.

Paperwork Requirements

This final rule will impose a minimal paperwork burden associated with accounting and payment of bills presented by FSIS to laboratories participating in the ALP. This burden is estimated at about one-half staff hour per laboratory per year. Under current Agency policies, six food chemistry check sample sets per year are being supplied to accredited laboratories.

About 195 laboratories in the ALP are expected to continue their accreditations for food chemistry analysis. In addition, the Agency has updated an existing form, to be used by participating laboratories to report the results of food chemistry check sample analyses for initial accreditation. The burden estimate for collecting and recording the information on the form and mailing it to FSIS is one-half staff hour per laboratory per set of check samples.

Information concerning the paperwork burden associated with the user fee provisions of the final rule has been submitted to OMB. The paperwork requirements under the new and existing FSIS accredited laboratory regulations, including the above form, have been approved under OMB No. 0583–0080.

Background

To assure compliance with regulations promulgated under the Federal Meat Inspection Act (FMIA—21 U.S.C. 601 *et seq.*) and the Poultry Products Inspection Act (PPIA—21 U.S.C. 451 *et seq.*), and regulations promulgated thereunder, samples of meat and poultry products are tested periodically to determine protein, moisture, fat, and salt content. Analyses are also conducted to determine the presence of any violative concentrations of drug or other chemical residues.

When FSIS finds that a product is not in compliance, the Agency is required to take appropriate action against the processor of that product. Depending on the type of product and the severity of the noncompliance, such action may range from product reprocessing to litigation proceedings. Because of the critical nature of product testing, it is necessary for FSIS laboratories that analyze official samples of meat and poultry products to maintain a high degree of integrity.

A processor whose sample is to be analyzed generally has the option of using either an FSIS laboratory or an accredited laboratory. The cost of FSIS analysis is borne by the Government while the cost of non-Federal analysis is borne by the processor. Due to the limited number of FSIS laboratories and their heavy workload, many processors prefer to use the non-Federal laboratories either for convenience of location or to obtain test results more quickly.

In 1991, section 1327 (7 U.S.C. 138f) of the Food, Agriculture, Conservation, and Trade Act 1990 (Pub. L. 101–624), known as the 1990 Farm Bill, was amended to require USDA to charge a nonrefundable accreditation fee for laboratories seeking accreditation by the Secretary under the authority of the FMIA or PPIA. The fee established is required to be an amount that will offset the cost of the ALP administered under the authority of the FMIA and PPIA. All fees collected by the Secretary of Agriculture are to be credited to an account from which the expenses of the Accredited Laboratory Program are paid, and are to be available immediately and remain available until expended for the ALP.

On August 19, 1993, FSIS proposed amendments to the Federal meat and poultry inspection regulations to establish accreditation fees and to adjust the standards and procedures for the accreditation of non-Federal analytical chemistry laboratories (58 FR 44236). The adjustments to program standards were proposed to more accurately reflect the performance of participating laboratories. Changes to some administrative procedures were also proposed to enhance FSIS management of the program.

The final rule is effective upon publication. Title I of the Agriculture, Rural Development, Food and Drug Administration, and Related Agencies Appropriation Act (Pub. L. 103–111) provides—separately from the appropriation for FSIS for services authorized by the FMIA and PPIA—for laboratory accreditation fees to be credited to the account for the FSIS appropriation. Therefore, FSIS must have the revenue from the accreditation fees available to operate the ALP during fiscal year 1994. Only upon promulgation of the final rule can the Agency have funds available for the ALP and operate the program according to the standards and procedures prescribed by the rule. Any delay in adoption of the rule could result in suspension of FSIS laboratory accreditation services and, consequently, a disruption of laboratory support in inspection operation.

In addition to the establishment of accreditation fees, the final rule adjusts standards and procedures for accreditation. Implementation of the accreditation fees in itself changes the procedures for applying for and obtaining an accreditation, so it is necessary to implement such application procedures at the same time that the fee requirement becomes effective.

Further, the final rule defines accreditation as, in part, a determination by the Agency that the applying laboratory meets certain qualifications. These qualifications for the several types of accreditation, including standardizing values, are set forth in the final rule. It would be administratively infeasible to separately implement the qualification criteria and the accreditation fees. Consequently, accreditation fees and adjusted standards and procedures for laboratory accreditation must be implemented simultaneously.

Therefore, in accordance with section 553 of the Administrative Procedure Act (5 U.S.C. 553), good cause is found for making the final rule effective upon publication.

1. User Fees

Accredited laboratories of record on the effective date of the final rule will be required to reapply to the Agency to continue their accreditations. FSIS will issue bills (Form AD–496–4, Bill for Collection) for their accreditation fees. The fee required for each accreditation sought is $3,500 per year. Laboratories that enter the program after the effective date of the regulation will be billed on the anniversary date of their application. Laboratories that lose their accreditation because of performance considerations and wish to reapply following the mandatory waiting period will be required to pay a new accreditation fee on the date of their application, commensurate with the number of new accreditations requested. Annual fees thereafter will be billed on the anniversary date of each accreditation. A copy or each bill will be forwarded to the National Finance Center, USDA, to record the account receivable in the records for the Agency. Payment of the bill, by money order, check, or bank draft, is due immediately and should be forwarded with a copy of the bill to the address shown on the bill.

Laboratories that wish to become accredited for the first time should submit their request in writing, identifying the specific accreditation(s) they seek. The laboratory will send to FSIS fees commensurate with the accreditation(s) sought along with its written application. Should an applying laboratory be unable to successfully analyze the initial set of accreditation check samples required, it will have an opportunity to analyze a second set of accreditation check samples to demonstrate analytical proficiency. If the laboratory fails to successfully analyze either of these sets of check samples, the laboratory will be required to wait the minimum mandatory time period—60 days—before reapplying for accreditation. The Agency considers this amount of time to be necessary and adequate for a laboratory to make the changes necessary to improve its performance. At that time, the laboratory will again be required to apply for accreditation and to pay the $3,500-per-accreditation fee in the same manner as it did initially.

Each year, the fee for laboratory accreditation and maintenance of accreditation will be reviewed and a cost analysis performed to determine whether the current nonrefundable accreditation fee established will be adequate to recover the costs of providing the accreditation service for the next year. If it is not, a new fee will be established and the regulations will be amended accordingly.

The agency uses the cumulative summation (CUSUM) statistical method in evaluating the ability of laboratories to maintain satisfactory performance and four types of CUSUM values are used as performance criteria. On the date the user-fee funded accreditation program goes into effect, the Agency will set all CUSUM values at zero for all laboratories in good standing.

2. Standardizing Values

FSIS uses analytical results obtained from FSIS and accredited laboratories on interlaboratory accreditation maintenance check samples and/or split samples to evaluate a laboratory's performance. Check samples are prepared from a large sample at a central location and sent to accredited laboratories. Split samples are splits of randomly selected official samples that are analyzed by an accredited laboratory and an FSIS laboratory.

The Agency's evaluation of a laboratory is based on the difference of a result obtained by that laboratory for a sample and the mean of results obtained by laboratories that analyzed the same sample. Evaluation is based on statistical summaries of these differences over many samples.

FSIS has amended §§ 318.21 and 381.153 (9 CFR 318.21 and 381.153) of the meat and poultry inspection regulations to change some of the standardizing values used in evaluating laboratory performance.

Review of Comments on the Proposed Rule

Comments on the proposal were received from 17 private laboratories, two State laboratories, one U.S. Congressman and one U.S. Senator (both enclosing constituent correspondence), three trade associations, and two professional associations. Subjects addressed ranged from the issue of charging user fees for laboratory accreditation, to the amount and fairness of the proposed fees, to accreditation standards and procedures. Comments have been grouped by subject, with agency responses, as follows.

Comment: The accredited laboratory program should be financed by appropriations and not by user fees. (Seven comments.)

Response: In the 1990 Farm Bill (7 U.S.C. 138f) as amended, Congress mandated the funding of the Accredited Laboratory Program through the charging of a nonrefundable accreditation fee.

Comment: The amount of the fee proposed is too high. Some laboratories may choose not to participate in the accreditation program. (19 comments.)

Response: The fee required by the 1990 Farm Bill, as amended, must offset the cost of the laboratory accreditation program. The fee proposed is based on the cost of operating the existing program and the estimated participation in the program. The charging of accreditation fees may lead some laboratories to discontinue their participation in the program. FSIS estimates that new enrollments would replace these and that, as a result, the cost of operating the program would not change significantly.

Although FSIS regrets any decision by a laboratory not to participate in the accreditation program for this reason the Agency is bound by the provisions of the Farm Bill to charge an accreditation fee that is based on the costs of the accreditation. The Farm Bill provides for annual adjustment of the fee. The Agency will review each year the level of participation by laboratories and the operating costs to the Agency to assure that the fee charged is fair and in compliance with the legislation.

Comment: The proposed fee is too high compared with fees charged in other, similar, laboratory accreditation programs. (Two comments.)

Response: As previously stated, the basis for the proposed fee is stipulated by the Farm Bill. The Agency does not have latitude in terms of charging a fee. The fee charged is required to offset the costs of the program. The Agency has determined that the fee proposed is necessary to offset the cost of the program.

Comment: The statistical basis for the performance standards proposed is questionable. (Five comments questioned the statistical methodology used; two favored it.)

Response: The Agency is monitoring the analysis of a varying number of check samples and/or split samples for each laboratory. Random numbers of samples are submitted to FSIS over a period of time. Process control statistics are appropriate for evaluating laboratory performance in this kind of situation, and the CUSUM method is among the best of these for this purpose. The comments in general do not call into question the fundamental concepts underlying the agency's approach to measuring laboratory performance. They do, however, criticize the complexity of the statistical treatment of the results and resulting inefficiency in the

Agency's administration of the ALP. The Agency is trying to improve its operations in this area and some of the statistical improvements already achieved, such as revised standardizing values, are reflected in the final rule.

In answer to one commenter who stated that the statistical definition of such terms as CUSUM–V and procedures for evaluating laboratory performance were not given in the proposal, the CUSUM terms were defined. The procedures in the existing regulations for evaluating laboratory performance have been left unchanged by the proposal and this final rule. The proposal focused on changes to the existing regulations. A detailed explanation of the concepts and definitions of the terms used in the existing regulations for CUSUM calculations was published in the 1987 final rule (52 FR 2176). Statistical definitions and the justification of the procedures used in the ALP were presented for public review when the proposal for the existing regulations was published in 1985 (50 FR 15435). The procedures are based on well-known concepts, such as CUSUM, which have been widely used since the 1950's. In addition, a technical addendum, which provided further details on these concepts, was made available for public review in 1985. Thus, FSIS believes that there has been ample opportunity for reviewing and obtaining an understanding of the procedures used.

In answer to one suggestion that a specific range for acceptable results be established for evaluating laboratory performance, the Agency rejected that idea in its 1985 proposal because it could be unfair to participating laboratories. For example, if an acceptable range for protein is plus or minus 1.0 percent from a mean value, then a deviation from the mean of 1.1 percent would count very heavily against a laboratory while one of 1.0 percent would not count at all. That is, in this case, a 0.1 percent marginal difference of results on a single sample, which represents only a scant amount of evidence of a valid difference of performance, would have a very large impact on the assessment of performance. On the other hand, deviations of 0.9 percent and 0.1 percent from the mean would be counted the same, and, similarly, deviations of 1.1 percent and 1.9 percent would be counted the same, and yet these deviations are quite different from one another and would provide evidence of differences in performance between the two laboratories for at least that sample. Thus, instead of using a range of acceptable versus non-acceptable results based on a specific cut-off value, the Agency adopted procedures which use continuous evaluation of performance, so that the effect of a small marginal difference, for example 0.1 percent, has only at most a small effect on the assessment statistics. FSIS believes that using continuous evaluation of performance is more statistically valid and fairer to the participating laboratories than the commenter's proposed procedure of using a specific range of acceptable results.

One commenter remarked that the use of CUSUM's will eventually cause a laboratory to exceed acceptable limits. The Agency has determined that when a CUSUM exceeds acceptable limits, there is deficiency in analytical performance. In addition, a CUSUM penalty for failure to report check sample results could cause a laboratory to exceed acceptable CUSUM limits.

Comment: The proposed fee is unfair to small business. (Seven comments.)

Response: The Agency based its fee strictly on the cost of operating its program. Laboratories with more than a single accreditation must pay more than laboratories with just one accreditation. The Agency determined that smaller laboratories, or smaller entities operating laboratories, would have fewer accreditations than larger entities or laboratories, and hence would pay less in fees. However, in a number of cases, the burden would be comparatively larger for a given small laboratory than for a larger laboratory. Therefore, some small laboratories would choose no longer to participate in the program.

Comment: The fee should be based on the size of a laboratory, annual volume of samples the laboratory analyzes, number of persons employed by the laboratory, or other criteria. (Three comments.)

Response: The 1990 Farm Bill stipulates that the nonrefundable fee charged for laboratory accreditation be established in an amount that offsets the cost of the program administered by the Agency. Such factors as laboratory size, sample volume, and numbers of persons employed by a laboratory do not significantly affect the accreditation status of the laboratory or the costs to FSIS of administering the ADP.

Comment: For the purpose of assessing fees for chemical residue accreditations, accreditation for the analysis of chlorinated hydrocarbons (CHO's) and for that of polychlorinated biphenyls (PCB's) should be considered a single accreditation. (Two comments.)

Response: Different procedures and laboratory equipment are currently in use for analyzing samples for CHC's and PCB's. Samples containing both CHC's and PCB's are subject to different analytical procedures. For this reason, the Agency regards the two compounds as separate classes of chemical residue, requiring different analytical approaches and separate accreditations.

Comment: Laboratories should not be required to reimburse FSIS for on-site inspections of their facilities, or only laboratories that are under probation with respect to accreditation for a type of analysis should be required to reimburse the Agency for an on-site inspection. (Five comments.)

Response: The 1990 Farm Bill specifically requires laboratories to reimburse the Agency "for reasonable travel and other expenses necessary to perform onsite inspections of the laboratory." (7 U.S.C. 138f(c).) The Agency accordingly expects laboratories to provide reimbursements that are adequate to cover the costs of such onsite reviews as may be necessary to assure that the laboratories—whatever their status—are capable of analyzing official meat and poultry samples.

Comment: Laboratories should be permitted to pay the annual fee for each accreditation in quarterly or other periodic installments, rather than in one lump sum. (One comment.)

Response: The 1990 Farm Bill, as amended, requires that laboratories participating in the accreditation program pay the nonrefundable fee for each accreditation sought upon filing an application for accreditation and annually thereafter. The legislation further indicates that the fees collected for operating the accreditation program shall be available immediately and remain available until expended to pay for the program. There is no practicable way for the Agency (and the laboratories) to comply with these provisions of the law without non-refundable lump-sum payment upon application for accreditation and at the time of each succeeding fiscal year in which the laboratories are to be eligible to analyze official samples.

Comment: Laboratories agree with the FSIS decision to reset all CUSUM values to zero upon commencement of the user-fee-funded laboratory accreditation program. (Two comments.) Response: FSIS acknowledges the agreement with the policy established.

Comment: The frequency of check sampling should be reduced from six per year to two per year. (One comment.)

Response: FSIS has determined that the current check sampling frequency is reasonable and necessary to maintain the integrity of the accreditation

program. Under the existing regulations (9 CFR 318.21(b)(3)(v) and (c)(3)(v) and 9 CFR 381.153(b)(3)(v) and (c)(3)(v)), which are modified by the final rule, the Agency determines the appropriate check sampling frequency. Check sampling frequency is under continual review and subject to modification by the Agency as necessary to ensure effective monitoring of laboratory performance.

Comment: The fee charged for laboratory accreditation should be set for at least two years in order to permit laboratories to plan and budget their resources with greater confidence. (Two comments.)

Response: FSIS understands the need for some stability in costs to enable administrators and managers to plan their future activities. At the same time, the 1990 Farm Bill authorizes the Agency to make annual adjustments of the fees charged for laboratory accreditation. It also requires that the accreditation fees offset the cost of accreditation. Thus, the Agency must be allowed to provide for annual adjustment of the fees for the ALP.

Comment: Some laboratories commented that it would be unfair for laboratories to have to pay the accreditation fee again during the same year following the required waiting period after having lost or failed to quality for an accreditation. (Two comments.)

Response: A laboratory that has lost its accreditation or that has never obtained one is unaccredited and must apply before it can become accredited (again). The 1990 Farm Bill, as amended, requires that a laboratory, upon applying for accreditation, pay a fee that is nonrefundable. Charging a laboratory an accreditation fee that has been reduced in some proportion to a fee for the same type of accreditation that has been paid less than a year before would be tantamount to granting a partial refund of the original fee.

The accreditation fee is computed as the average cost per accreditation in operating the ALP under the standards and procedures existing prior to this final rule. The Farm Bill requires that the fee offset the cost of the accreditation program. Administrative and other costs to the program for laboratories that have lost or been refused accreditation and tried again to gain accreditation are higher than those for laboratories that have remained in good standing.

The higher-than-average costs associated with laboratories that lose or are refused accreditation and reapply for accreditation vary from year to year according to the number of such laboratories, which is very small. In fiscal year 1993, only four such laboratories reapplied within the year after they had been refused or lost their accreditation. This number can be expected to vary somewhat in the future, but by how much is difficult to estimate, especially considering that, under this final rule, the ALP is operated under revised standards and procedures intended to result in improved accuracy in determining the quality of a laboratory's performance.

A laboratory's decision to apply or reapply for accreditation is entirely voluntary and is based on its own calculation of benefits and costs and the confidence it has in its ability to meet performance and other qualification standards.

Comment: The 30-day period for commenting on the proposal is inadequate and should be extended. (Two comments.)

Response: The 30-day comment period given is consistent with the time period provided for many other FSIS rulemaking documents. FSIS considers this period of time adequate to afford commenters an opportunity to review the proposal and supply meaningful comments. In accordance with the new Executive Order 12866, however, the Agency will in the future provide a 60 day comment period for all proposed rules.

Comment: One commenter suggested that all testing of official samples be conducted by accredited laboratories and that labor savings be used for other Agency purposes, including offsetting the cost of operating the ALP.

Response: Although the use of accredited laboratories provides certain advantages to both the regulated industry and FSIS, the use of savings in one area of the Agency's operations (laboratory testing) cannot be used in this case to offset costs in another (laboratory accreditation). The FSIS appropriation language in Title I of the Agriculture, Rural Development, Food and Drug Administration, and Related Agencies Appropriations Act (PL 103–111) requires that user fees be used to offset the costs of the accreditation program. Appropriations for other Agency activities cannot be so used.

Comment: One commenter suggested that FSIS commission an outside, independent laboratory to administer the accreditation program at reasonable cost to the Agency and laboratories.

Response: The purpose of accreditation is to provide laboratory analytical resources additional to those operated by the Agency for the analysis of official samples in support of mandatory meat and poultry inspection. FSIS must prescribe the standards for and maintain administrative control of the analysis of these samples to assure the integrity of its program. Although the Agency can and does contract with outside laboratories for technical support of its activities, including the analysis of official samples, it is the Agency that administers the inspection program and ancillary activities. The Agency cannot, therefore, relinquish its administrative role in laboratory accreditation.

Comment: If user fees are charged for accreditation, the response time and accuracy of the reports from FSIS on official samples must be improved to obviate costs to laboratories for outside quality control services.

Response: FSIS is striving to improve the efficiency of its chemistry laboratory quality service operations, including those associated with laboratory accreditation. This effort is being made irrespective of the accreditation fee requirement, which is a legislative mandate. The decision by a private laboratory to contract with firms providing quality control services is, of course, entirely its own.

In addition to the comments submitted, correspondents asked several questions seeking clarification of the terms of the proposal. For example, one question was whether State government laboratories will be required to maintain accreditation to monitor products in intrastate commerce and, if so, will they be required to pay accreditation fees to remain in the ALP. The answer is that State laboratories that are operated in support of State inspection programs (for meat or poultry products distributed solely in intrastate commerce) are not required to be accredited in the ALP. Those State laboratories that wish to remain in the ALP must pay accreditation fees and those that seek new accreditation must pay fees to become accredited.

A second question was whether results of analysis of split samples are provided to in-plant inspectors. The Agency's answer is "no." This information, which is used for quality assurance, is sent to the Agency's Eastern Laboratory in Athens, Georgia.

A third question was whether the same CUSUM limits would be applied under the new regulations as under the existing regulations. The Agency's answer is "yes."

A fourth question was what were the qualification requirements for laboratory analysts working with samples containing the compounds of interest in the proposal. Qualification requirements of laboratory analysts remain the same

under the new regulations as under the existing regulations.

A fifth question was whether the number of split samples analyzed by laboratories could be limited to a certain maximum number per year. Split sampling frequency is under continual review and subject to modification by the Agency as necessary to assure effective monitoring of laboratory performance.

A sixth question was whether FSIS laboratories participating in the check sample phase of the ALP would be subject to the same requirements for maintaining accreditation as commercial or industrial laboratories. FSIS laboratories are not accredited laboratories but they must adhere to exactly the same standards as accredited laboratories for the same types of analysis.

In addition to comments and questions on the proposed rule, there were a number of suggestions for minor technical changes in the operation of the ALP, such as, for example, improving the timeliness of reports. FSIS is always interested in ways to improve the program and will take these suggestions into consideration. They are not addressed in this rulemaking, however.

The Final Rule

FSIS has concluded that no significant changes based on comments received on the proposal are necessary in the final rule. The Agency is, however, making a number of editorial changes to correct oversights in the proposal. These changes in the amendments to both 9 CFR 318.21 and 9 CFR 381.153 will make certain provisions more clear. A discussion of these changes follows.

The wording of the definition of "comparison mean" is being changed to show clearly that the reference to a case in which two laboratories are analyzing a sample is that of a split sample analysis by an accredited laboratory and an FSIS laboratory. This change alleviates a possible misinterpretation of provisions in the existing regulations that address the four CUSUM procedures (CUSUM's –P, –N, –V, –D).

The wording of the definition of "interlaboratory accreditation maintenance check sample" is being changed to show that the check sample is provided by FSIS and not necessarily by an FSIS laboratory. Check samples may be provided by contract facilities or by those operated by the Agency.

The wording of the definition of "official sample" in 9 CFR 318.21(a) is being changed by substituting the term "Program employee" for "FSIS employee" to show that official samples may be collected by personnel of agencies other than FSIS who perform Federal inspection under cooperative agreements with FSIS.

The wording of the definition of "systematic laboratory difference" is being changed by substituting the term "a negative systematic laboratory difference" for the term "negative systematic values." The terms mean the same thing in the context of the definition but uniform use of the term "systematic laboratory difference" eliminates possible confusion.

The wording of the definition of "variance" is being changed by substituting the term "an expected sample mean" for "a true sample mean." The reworded phrase is more statistically accurate than the original but its intended meaning is the same.

Footnote 2 to Table 1, which follows the list of definitions in paragraph (a), has been clarified to explain that the quantity X is the comparison mean of the sample.

Table 2, which follows Table 1 at the end of the list of definitions in paragraph (a), has been revised to show more clearly the specific classes of chemical residue. The list of individual compounds under "chlorinated hydrocarbons" has been indented. The table shows chlorinated hydrocarbons, polychlorinated biphenyls, arsenic, sulfonamides, and volatile nitrosamine as separate classes of residue. This was the original intention of the Agency in its proposal and reflects current ALP practice. Further, the placement of footnote numbers is being corrected so that a footnote superscript 1 appears next to "Chlorinated Hydrocarbons:"; superscript 2 appears next to "Arsenic," "Sulfonamides," and "Volatile Nitrosamine"; and superscript 3 appears next to "Standardizing value," in the heading for the fourth column of the table. The footnote placements in Table 2 in both 9 CFR 318.21 and 9 CFR 381.153 will now be the same, as was originally intended. In addition, the term "Percent Expected Recoveries (QC)" in the title of the table has been corrected to read "Percent Expected Recoveries (QC and QA)" and a similar correction has been made in the third column heading because reference to quality assurance (QA) was inadvertently omitted.

The introductory texts of paragraph (b)(1) and (c)(1) of 9 CFR 318.21 and 381.153 have been revised to show that applications can be made on designated FSIS forms or otherwise in writing. Paragraphs (b)(1)(i) and (c)(1)(i) of 9 CFR 318.21 and 381.153 have been revised to show that accreditation fees are payable through a billing process. Paragraphs (b)(1)(ii) and (c)(1)(ii) of 9 CFR 318.21 and 381.153 have been revised to show that fees for accreditation are payable by check, bank draft, or money order. The proposal neglected to show explicitly that the fees are "for accreditation" and that they may be paid by check. The proposal inadvertently failed to state that accreditation will not be granted or continued without further procedure when laboratories do not pay accreditation fee(s). Paragraphs (b)(1)(iv) and (c)(1)(iv) of 9 CFR 318.21 and 381.153 have been revised to show that bills for accreditation fees are payable by check, bank draft, or money order. In addition, these paragraphs now include the information that the fees paid are non-refundable and credited to the account from which ALP expenses are paid.

The last sentence in paragraphs (b)(2)(ii) and (c)(2)(ii) of 9 CFR 318.21 and 381.153 is being revised by replacing the words "and all documents" to "and all documentation of corrective action." The new wording is more precise.

Paragraphs (b)(3)(i), (b)(3)(xi), and (c)(3)(xi) of 9 CFR 318.21 and 381.153 are being changed by substituting the words "or to the address designated" for "unless otherwise directed" to show that the meaning intended is that another address than that shown for reporting analytical results could be chosen by FSIS.

Paragraphs (b)(3)(ix) and (c)(3)(ix) of 9 CFR 318.21 and 381.153 have been changed by reversing the word order in the phrase "split samples and interlaboratory accreditation maintenance check samples" and by replacing "and" with "and/or" in paragraph (c)(3)(ix). The phrase now reads "interlaboratory accreditation maintenance check samples and/or split samples."

Paragraph (g)(1) of 9 CFR 318.21 and 381.153 has been changed by the insertion of the phrase "and/or split samples" after the phrase "such interlaboratory accreditation maintenance check samples." The phrasing in these paragraphs now more accurately reflects the current practice of the ALP.

In paragraph (c)(1) of 9 CFR 318.21 and 381.153 introductory text, the phrase "refused or withdrawn" is being changed to "refused or revoked" to make the reference to the status of laboratories applying for chemical residue accreditation consistent with the similar reference in paragraph (b)(1) of 9 CFR 318.21 and 381.153 to laboratories applying for food chemistry accreditation.

Finally, the revised authority citation for 9 CFR 391.5 is being changed to include 21 U.S.C. 451 *et seq.* instead of 21 U.S.C. 460 *et seq.* and also to include 7 CFR 2.17(g) and (i), 2.55. The PPIA citation in both the current 9 CFR part 391 and the proposed revised citation are in error and the error is being corrected. The 7 CFR citations, which are delegations of authority to FSIS, are in the current 9 CFR part 391 authority citation and are intended to be left unchanged.

In summary, to comply with a mandate through amendments to the 1990 Farm Bill, FSIS is charging a fee of $3,500 per accreditation to participants in its voluntary ALP. The Agency has amended 9 CFR 318.21 and 381.153 to implement the fee-based program. Costs associated with the program will be reviewed each year to determine if the fee should be adjusted.

FSIS has also amended 9 CFR 318.21 and 381.153 to change the standardizing values used in evaluating laboratory performance.

List of Subjects

9 CFR Part 318

Accreditation of chemistry laboratories, Meat inspection.

9 CFR Part 381

Accreditation of chemistry laboratories, Poultry products inspection.

9 CFR Part 391

Fees and charges for inspection services, Laboratory accreditation fees.

For the reasons discussed in the preamble, FSIS is amending 9 CFR parts 318, 381, and 391 to read as follows:

PART 318—ENTRY INTO OFFICIAL ESTABLISHMENTS; REINSPECTION AND PREPARATION OF PRODUCTS

1. The authority citation for part 318 is revised to read as follows:

Authority: 7 U.S.C. 138f; 7 U.S.C. 450, 1901–1906; 21 U.S.C. 601–695; 7 CFR 2.17, 2.55.

2. Paragraph (a) of § 318.21 is amended by removing the definition for "Accredited Laboratory Coordinator"; by revising the definitions for "AOAC Methods," "Comparison Mean," "Correct Chemical Residue Identification," "CUSUM," "Interlaboratory Accreditation Maintenance Check Sample," "Minimum Proficiency Level," "Official Sample" "Standardized Difference," "Standardizing Value," and "Systematic Laboratory Difference"; by adding, in alphabetical order, new definitions for "Accreditation," "Refusal of Accreditation," "Revocation of Accreditation," "Standardizing Constant," "Suspension of Accreditation," and "Variance"; and by revising Tables 1 and 2, to read as follows:

§ 318.21 Accreditation of chemistry laboratories.

(a) * * *

Accreditation—Determination by FSIS that a laboratory is qualified to analyze official samples of product subject to regulations in this subchapter and part 381 of this chapter for the presence and amount of all four food chemistry analytes (protein, moisture, fat, and salt); or a determination by FSIS that a laboratory is qualified to analyze official samples of product subject to regulations in this subchapter and part 381 of this chapter for the presence and amount of one of several classes of chemical residue, in accordance with the requirements of the Accredited Laboratory Program. Accreditations are granted separately for the food chemistry analysis of official samples and for the analysis of such samples for any one of the several classes of chemical residue. A laboratory may hold more than one accreditation.

* * * * *

AOAC methods—Methods of chemical analysis, section 24.001 through 24.071, AOAC International; in the "Official Methods of Analysis of AOAC International," 15th edition 1990; published by AOAC International, 2200 Wilson Boulevard, Suite 400, Arlington, VA 22207. This publication is incorporated by reference and was originally approved by the Director, Office of the Federal Register, on February 19, 1987.[1]

* * * * *

Comparison Mean—The average, for a sample, of all accredited and FSIS laboratories' average results, each of which has a large deviation measure of zero, except when only two laboratories perform the analysis, as in the case of split sample analysis by both an accredited laboratory and an FSIS laboratory. In the latter case, the comparison mean is the average of the two laboratories' results. For food chemistry, a result for a laboratory is the obtained analytical value; for chemical residues, a result is the logarithmic transformation of the obtained analytical value.

[1] Copies of this publication are on file with the Director, Office of the Federal Register, and may be purchased from AOAC International at the address indicated.

Correct chemical residue identification—Correct identification by a laboratory of a chemical residue whose concentration, in a sample, is equal to or greater than the minimum reporting level for that residue, as determined by the median of all positive analytical values obtained by laboratories analyzing the sample. Failure of a laboratory to report the presence such a chemical residue is considered a misidentification. In addition, reporting the presence of a residue at a level equal to or above the minimum reporting level that is not reported by 90 percent or more of all other laboratories analyzing the sample, is considered a misidentification.

CUSUM—A class of statistical procedures for assessing whether or not a process is "in control". Each CUSUM value is constructed by accumulating incremental values obtained from observed results of the process, and then determined to either exceed or fall within acceptable limits for that process. The initial CUSUM values for each laboratory whose application for accreditation is accepted are set at zero. The four CUSUM procedures are:

(1) Positive systemic laboratory difference CUSUM (CUSUM–P)—monitors how consistently an accredited laboratory gets numerically greater results than the comparison mean;

(2) Negative systematic laboratory difference CUSUM (CUSUM–N)—monitors how consistently an accredited laboratory gets numerically smaller results than the comparison mean;

(3) Variability CUSUM (CUSUM–V)—monitors the average "total discrepancy" (i.e., the combination of the random fluctuations and systematic differences) between an accredited laboratory's results and the comparison mean;

(4) Individual large discrepancy CUSUM (CUSUM–D)—monitors the magnitude and frequency of large differences between the results of an accredited laboratory and the comparison mean.

* * * * *

Interlaboratory accreditation maintenance check sample—A sample prepared and sent by FSIS to a non-Federal laboratory to assist in determining if acceptable levels of analytical capability are being maintained by the accredited laboratory.

* * * * *

Minimum proficiency level—The minimum concentration of a residue at which an analytical result will be used to assess a laboratory's quantification capability. This concentration is an estimate of the smallest concentration

for which the average coefficient of variation (CV) for reproducibility (i.e., combined within and between laboratory variability) does not exceed 20 percent. (See Table 2)

* * * * *

Official Sample—A sample selected by a Program employee in accordance with FSIS procedures for regulatory use.

* * * * *

REfusal of Accreditation—An action taken when a laboratory which is applying for accreditation is denied the accreditation.

* * * * *

Revocation of Accreditation—An action taken against a laboratory which removes its right to analyze official samples.

* * * * *

Standardizing Constant—The number which is the result of a mathematical adjustment to the "standardized value." Specifically, the number equals the square root of the expected variance of the difference between the accredited or applying laboratory's result and the comparison mean on a sample, taking into consideration the standardizing value, the correlation and number of repeated results by a laboratory on a sample, and the number of laboratories that analyzed the sample.

Standardized Difference—The quotient of the difference between a laboratory's result on a sample and the comparison mean of the sample divided by the standardizing constant.

Standardizing Value—A number representing the performance standard deviation of an individual result (see Tables 1 and 2 and footnotes to the Tables for determining exact procedures for calculation).

Suspension of Accreditation—Action taken against a laboratory which temporarily removes its right to analyze official samples. Suspension of accreditation ends when accreditation is either fully restored or revoked.

Systematic laboratory difference—A comparison of one laboratory's results with the comparison means on samples that shows, on average, a consistent relationship. A laboratory that is reporting, on average, numerically greater results than the comparison mean has a positive systematic laboratory difference and, conversely, numerically smaller results indicate a negative systematic laboratory difference.

* * * * *

Variance—The expected average of the squared differences of sample results from an expected sample mean.

TABLE 1.—STANDARDIZING VALUES FOR FOOD CHEMISTRY

[By product class and analyte]

Product/Class	Moisture	Protein [1]	Fat [2]	Salt [3]
Cured Pork/Canned Ham	0.50	0.060	0.26 (0.30)	0.127
Ground Beef	0.71	0.060	(0.35)	0.127
Other	0.57	0.060	0.26 (0.30)	0.127

[1] To obtain the standardizing value for a sample the appropriate entry in this column is multiplied by $X^{0.65}$ where X is the comparison mean of the sample.

[2] To obtain the standardizing value for a sample, the appropriate entry in this column is multiplied by $X^{0.25}$, where X is the comparison mean of the sample. The appropriate entry is equal to the value in parentheses when X is equal to or greater than 12.5 percent, otherwise it is equal to 0.26.

[3] To obtain the standardizing value for a sample, when the comparison mean of the sample, X, is less than 1.0 percent, the standardizing value equals 0.127, otherwise the appropriate entry is multiplied by $X^{0.25}$. When X is equal to or greater than 4.0 percent for dry salami and pepperoni products, the standardizing value equals 0.22.

TABLE 2.—MINIMUM PROFICIENCY LEVELS, PERCENT EXPECTED RECOVERIES (QC AND QA), AND STANDARDIZING VALUES FOR CHEMICAL RESIDUES

Class of residues	Minimum proficiency level	Percent expected recovery (QC and QA)	Standardizing value [3]
Chlorinated Hydrocarbons: [1]			
Aldrin	0.10 ppm	80–110	0.20
Benzene Hexachloride	0.10 ppm	80–110	0.20
Chlordane	0.30 ppm	80–110	0.20
Dieldrin	0.10 ppm	80–110	0.20
DDT	0.15 ppm	80–110	0.20
DDE	0.10 ppm	80–110	0.20
TDE	0.15 ppm	80–110	0.20
Endrin	0.10 ppm	80–110	0.20
Heptachlor	0.10 ppm	80–110	0.20
Heptachlor Epoxide	0.10 ppm	80–110	0.20
Lindane	0.10 ppm	80–110	0.20
Methoxychlor	0.50 ppm	80–110	0.20
Toxaphene	1.00 ppm	80–110	0.20
Hexachlorobenzene	0.10 ppm	80–110	0.20
Mirex	0.10 ppm	80–110	0.20
Nonachlor	0.15 ppm	80–110	0.20
Polychlorinated Biphenyls:	0.50 ppm	80–110	0.20
Arsenic [2]	0.20 ppm	90–105	0.25
Sulfonamides [2]	0.08 ppm	70–120	0.25
Volatile Nitrosamine [2]	5 ppm	70–110	0.25

[1] Laboratory statistics are computed over all results (excluding PCB results), and for specific chemical residues.

[2] Laboratory statistics are only computed for specific chemical residues.

[3] The standardizing value of all initial accreditation and probationary check samples computations is 0.15.

3. Paragraph (b)(1) of § 318.21 is revised to read as follows:

§ 318.21 Accreditation of chemistry laboratories.

* * * * *

(b) * * *

(1) *Applying for accreditation.* Application for accreditation shall be made on designated forms provided by FSIS, or otherwise in writing, by the owner or manager of a non-Federal analytical laboratory and sent to the Accredited Laboratory Program, room 516–A, Annex Building, Food Safety and Inspection Service, U.S. Department of Agriculture, 300 12th Street SW., Washington, DC 20250–3700, and shall specify the kinds of accreditation that are wanted by the owner or manager of the laboratory. A laboratory whose accreditation has been refused or revoked may reapply for accreditation after 60 days from the effective date of that action, and must provide written documentation specifying what corrections were made.

(i) At the time that an Application for Accreditation is filed with the Accredited Laboratory Program, FSIS, and annually thereafter upon receipt of the bill issued by FSIS on the anniversary date of each accreditation, the management of a laboratory shall reimburse the program at the rate specified in 9 CFR 391.5 for the cost of each accreditation that is sought for the laboratory or that the laboratory holds.

(ii) Simultaneously with the initial application for accreditation, the management of a laboratory shall forward a check, bank draft, or money order in the amount specified in 9 CFR 391.5 made payable to the U.S. Department of Agriculture along with the completed application for the accreditation(s) sought by the laboratory. Accreditation will not be granted or continued, without further procedure, for failure to pay the accreditation fee(s). The fee(s) paid shall be nonrefundable and shall be credited to the account from which the expenses of the laboratory accreditation program are paid.

(iii) Annually on the anniversary date of each accreditation, FSIS will issue a bill in the amount specified in 9 CFR 391.5.

(iv) Bills are payable upon receipt by check, bank draft, or money order, made payable to the U.S. Department of Agriculture, and become delinquent 30 days from the date of the bill. Accreditation will be terminated without further procedure for having a delinquent account. The fee(s) paid shall be nonrefundable and shall be credited to the account from which the expenses of the Accredited Laboratory Program are paid.

(v) The accreditation of a laboratory that was accredited by FSIS on or before December 13, 1993 and was not on probation and whose accreditation on that date was not in suspension or revocation shall be continued, provided that such laboratory reapply for accreditation in accordance with the provisions of this paragraph (b)(1) by January 12, 1994 (30 days after the effective date of this section), and that the reapplication be accepted by the Agency. The CUSUM values for such laboratory will be reset at zero upon acceptance of its reapplication. The accreditation of a laboratory that is on probation shall be continued, provided that the laboratory reapply for accreditation by February 11, 1994 (60 days after the effective date of this section), that the reapplication be accepted by the Agency, and that the laboratory satisfy the terms of the probation.

* * * * *

4. Paragraphs (b)(2) (ii) introductory text, (b)(3)(i), (b)(3)(vi), (b)(3)(vii), (b)(3)(ix) introductory text, (b)(3)(x)(C), (b)(3)(xi) of § 318.21 are revised; and new paragraphs (b)(2)(iv) and (b)(3)(xii) and added to read as follows:

§ 318.21 Accreditation of chemistry laboratories.

* * * * *

(b) * * *

(2) * * *

(ii) Demonstrate acceptable levels of systematic laboratory difference, variability, and individual large deviations in the analyses of moisture, protein, fat, and salt content using AOC methods. An applying laboratory will successfully demonstrate these capabilities if its moisture, protein, fat, and salt results from a 36 check sample accreditation study each satisfy the criteria presented below.[2] If the laboratory's analysis of an analyte (or analytes) from the first set of 36 check samples does not meet the criteria for obtaining accreditation, a second set of 36 check samples will be provided within 30 days following the date of receipt by FSIS of a request from the applying laboratory. The second set of samples shall be analyzed for only the analyte(s) for which unacceptable initial results had been obtained by the laboratory. If the results of the second set of samples do not meet the accreditation criteria, the laboratory may reapply after a 60-day waiting period, commencing from the date of refusal of accreditation by FSIS. At that time, a new application, all fees, and all documentation of corrective action required for accreditation must be submitted.

* * * * *

(iv) Pay the accreditation fee by the date required.

(3) * * *

(i) Report analytical results of the moisture, protein, fat, and salt content of official samples, weekly, on designated forms to the FSIS Eastern Laboratory, College Station Road, P.O. Box 6085, Athens, GA 30604, or to the address designated by the Quality Systems Branch, FSIS Chemistry Division.

* * * * *

(vi) Inform the Accredited Laboratory Program, room 516–A, Annex Building, Food Safety and Inspection Service, U.S. Department of Agriculture, 300 12th Street, SW., Washington, DC 20250–3700, by certified or registered mail, within 30 days, when there is any change in the laboratory's ownership, officers, directors, supervisory personnel, or other responsibly connected individual or entity.

(vii) Permit any duly authorized representative of the Secretary to perform both announced and unannounced on-site laboratory reviews of facilities and records during normal business hours, and to copy any records pertaining to the laboratory's participation in the Accredited Laboratory Program.

* * * * *

(ix) Demonstrate that acceptable limits of systematic laboratory difference, variability, and individual large deviations are being maintained in the analyses of moisture, protein, fat, and salt content. An accredited laboratory will successfully demonstrate the maintenance of these capabilities if its moisture, protein, fat, and salt results from interlaboratory accreditation maintenance check samples and/or split samples satisfy the criteria presented below.[5]

* * * * *

(x) * * *

(C) Satisfy criteria for check samples specified in paragraphs (b)(2)(ii) (A), (B), and (C) of this section.

(xi) Expeditiously report analytical results of official samples to the FSIS Eastern Laboratory, College Station Road, P.O. Box 6085, Athens, GA 30604, or to the address designated by the Quality Systems Branch, FSIS Chemistry Division. The Federal

[2] All statistical computations are rounded to the nearest tenth, except where otherwise noted.

[5] All statistical computations are rounded to the nearest tenth, except where otherwise noted.

inspector at any establishment may assign the analysis of official samples to an FSIS laboratory if, in the inspector's judgment, there are delays in receiving test results on official samples from an accredited laboratory.

(xii) Pay the required accreditation fee when it is due.

* * * * *

5. Footnote 4 to paragraph (b)(2)(ii)(C) of § 318.21 is renumbered as footnote 3; and footnote 5 to paragraph (b)(3)(viii) of § 318.21 is renumbered as footnote 4 and revised to read as follows:

[4] Copies of the "Official Methods of Analysis of AOAC International," 15th edition, 1990, are on file with the Director, Office of the Federal Register, and may be purchased from AOAC International, 2200 Wilson Boulevard, Suite 400, Arlington, VA 22201.

6. Footnote 4 to paragraph (b)(3)(ix)(C) introductory text is renumbered as footnote 6 and revised to read as follows:

[6] *See* footnote 3.

7. Paragraph (c)(1) of § 318.21 is revised to read as follows:

§ 318.21 Accreditation of chemistry laboratories.

* * * * *

(c) * * *

(1) *Applying for accreditation.* Application for accreditation shall be made on designated forms provided by FSIS, or otherwise in writing, by the owner or manager of the non-Federal analytical laboratory and sent to the Accredited Laboratory Program, room 516–A, Annex Building, Food Safety and Inspection Service, U.S. Department of Agriculture, 300 12th Street, SW., Washington, DC 20250–3700, and shall specify the kinds of accreditation that are wanted by the owner or manager of the laboratory. A laboratory whose accreditation has been refused or revoked may reapply for accreditation after 60 days from the effective date of that action, and must provide written documentation specifying what corrections were made.

(i) At the time that an Application for Accreditation is filed with the Accredited Laboratory Program, FSIS, and annually thereafter upon receipt of the bill issued by FSIS on the anniversary date of each accreditation, the management of a laboratory shall reimburse the program at the rate specified in 9 CFR 391.5 for the cost of each accreditation that is sought for the laboratory or that the laboratory holds.

(ii) Simultaneously with the initial application for accreditation, the management of a laboratory shall forward a check, bank draft, or money order in the amount specified in 9 CFR 391.5 made payable to the U.S. Department of Agriculture along with the completed application for the accreditation(s) sought for the laboratory. Accreditation will not be granted or continued, without further procedure, for failure to pay the accreditation fee(s). The fee(s) paid shall be nonrefundable and shall be credited to the account from which the expenses of the laboratory accreditation program are paid.

(iii) Annually on the anniversary date of each accreditation, FSIS will issue a bill in the amount specified in 9 CFR 391.5.

(iv) Bills are payable upon receipt by check, bank draft, or money order, made payable to the U.S. Department of Agriculture, and become delinquent 30 days from the date of the bill. Accreditation will be terminated without further procedure for having a delinquent account. The fee(s) paid shall be nonrefundable and shall be credited to the account from which the expenses of the Accredited Laboratory Program are paid.

(v) The accreditation of a laboratory that was accredited by FSIS on or before December 13, 1993 and was not on probation and whose accreditation on that date was not in suspension or revocation shall be continued, provided that such laboratory reapply for accreditation in accordance with the provisions of this paragraph (c)(1), by January 12, 1994 (30 days of the effective date of this section), and that the reapplication be accepted by the Agency. The CUSUM values for such laboratory will be reset at zero upon acceptance of its reapplication. The accreditation of a laboratory that is on probation shall be continued, provided that such laboratory reapply for accreditation by February 11, 1994 (60 days of the effective date of this section), that the reapplication be accepted by the Agency, and that the laboratory satisfy the terms of the probation.

* * * * *

8. Paragraph (c)(2)(ii) introductory text of § 318.21 is revised and a new paragraph (c)(2)(iv) is added to read as follows:

§ 318.21 Accreditation of chemistry laboratories.

* * * * *

(c) * * *

(2) * * *

(ii) Demonstrate acceptable limits of systematic laboratory difference, variability, individual large deviations, recoveries, and proper identification in the analysis of the class of chemical residues for which application was made, using FSIS approved procedures. An applying laboratory will successfully demonstrate these capabilities if its analytical results for each specific chemical residue provided in a check sample accreditation study containing a minimum of 14 samples satisfy the criteria presented in this paragraph (c)(2)(ii).[7] In addition, if the laboratory is requesting accreditation for the analysis of chlorinated hydrocarbons, all analytical results for the residue class must collectively satisfy the criteria. [Conformance to criteria (c)(2)(ii) (A), (B), (C), (D), (E), and (F) will only be determined when six or more analytical results with associated comparison means at or above the logarithm of the minimum proficiency level are available.] If the results of the first set of check samples do not meet these criteria for obtaining accreditation, a second set of at least 14 samples will be provided within 30 days following the date of receipt by FSIS of a request from the applying laboratory. If the results of the second set of samples do not meet accreditation criteria, the laboratory may reapply after a 60-day waiting period, commencing from the date of refusal of accreditation by FSIS. At that time, a new application, all fees, and all documentation of corrective action required for accreditation must be submitted.

* * * * *

(iv) Pay the accreditation fee by the date required.

* * * * *

9. Footnote 9 to paragraph (c)(2)(ii)(C) of § 318.21 is renumbered as footnote 8; footnotes 10 and 11 to § 318.21(c)(3)(ix) introductory text of § 318.21 are renumbered as footnotes 9 and 10, respectively; and footnote 12 to § 318.21 (c)(3)(ix)(A)(*1*) introductory text is renumbered as footnote 11.

10. Footnote 13 to § 318.21(c)(3)(ix)(A)(*2*) introductory text is renumbered as footnote 12 and revised to read:

[12] *See* footnote 11.

11. Footnote 14 to § 318.21(c)(3)(ix)(B) introductory text is renumbered as footnote 13 and footnote 15 to paragraph (c)(3)(ix)(C) introductory text is renumbered as footnote 14.

12. Footnote 16 to § 318.21(c)(3)(xiii)(A)(*1*) introductory text is renumbered as footnote 15 and footnote 17 to paragraph (c)(3)(xiii)(A)(*2*) introductory text is renumbered as footnote16; and the text of each of these footnotes is revised to read "*See* footnote 11."

[7] All statistical computations are rounded to the nearest tenth, except where otherwise noted.

13. Footnote 18 to § 318.21(c)(3)(xiii)(B) introductory text is renumbered as footnote 17 and the text of this footnote is revised to read "*See* footnote 13."

14. Footnote 19 to § 318.21(c)(3)(xiii)(C) introductory text is renumbered as footnote 18.

15. Paragraph (c)(3)(i) of § 318.21 is removed and reserved.

16. Paragraphs (c)(3)(vi), (c)(3)(vii), (c)(3)(ix) introductory text, (c)(3)(x)(C), and (c)(3)(xi) of § 318.21 are revised and a new paragraph (c)(3)(xiv) added to read as follows:

§ 318.21 Accreditation of chemistry laboratories.

* * * * *

(c) * * *

(3) * * *

(vi) Inform the Accredited Laboratory Program, room 516–A, Annex Building, Food Safety and Inspection Service, U.S. Department of Agriculture, 300 12th Street, SW., Washington, DC 20250–3700, by certified or registered mail, within 30 days of any change in the laboratory's ownership, officers, directors, supervisory personnel, or any other responsibly connected individual or entity.

(vii) Permit any duly authorized representative of the Secretary to perform both announced and unannounced on-site laboratory reviews of facilities and records during normal business hours, and to copy any records pertaining to the laboratory's participation in the Accredited Laboratory Program.

* * * * *

(ix) Demonstrate that acceptable limits of systematic laboratory difference, variability, and individual large deviations are being maintained in the analysis of samples, in the chemical residue class for which accreditation was granted. A laboratory will successfully demonstrate the maintenance of these capabilities if its analytical results for each specific chemical residue found in interlaboratory accreditation maintenance check samples and/or split samples satisfy the criteria presented in this paragraph (c)(3)(ix).[9, 10] In addition, if the laboratory is accredited for the analysis of chlorinated hydrocarbons, all analytical results for the residue class must collectively satisfy the criteria.

* * * * *

(x) * * *

(C) Satisfy criteria for check samples as specified in paragraphs (c)(2)(ii) (A), (B), (C), (D), (E), and (F) of this section.

(xi) Expeditiously report analytical results of official samples to the Eastern Laboratory, College Station Road, P.O. Box 6085, Athens, GA 30604, or to the address designated by the Quality Systems Branch, FSIS Chemistry Division. The Federal inspector at any establishment may assign the analysis of official samples to an FSIS laboratory if, in the judgment of the inspector, there are delays in receiving test results on official samples from an accredited laboratory.

* * * * *

(xiv) Pay the accreditation fee when it is due.

* * * * *

17. Paragraphs (g)(1), (g)(2), (g)(3)(ii) of § 318.21 are revised to read as follows:

§ 318.21 Accreditation of chemistry laboratories.

* * * * *

(g) * * *

(1) An accredited laboratory which is accredited to perform analysis under paragraph (b) of this section shall have its accreditation revoked for failure to meet any of the requirements of paragraph (b)(3) of this section except for the following circumstances. If the accredited laboratory fails to meet the criteria for reporting the analytical results on interlaboratory accreditation maintenance check samples as set forth in paragraph (b)(3)(v) of this section or if, at any time, the CUSUM results from the analysis of such interlaboratory accreditation maintenance check samples and/or split samples have not satisfied the criteria specified in paragraph (b)(3)(ix) of this section and there have been, during the previous 12 months, no other occasions on which such CUSUM results have not satisfied such criteria, the laboratory shall be placed on probation; but if there have been such other occasions during those 12 months, the laboratory's accreditation will be revoked.

(2) An accredited laboratory which is accredited to perform analysis for a class of chemical residues under paragraph (c) of this section shall have the accreditation to perform this analysis revoked if it fails to meet any of the requirements in paragraph (c)(3) of this section except for the following circumstances. If the accredited laboratory fails to meet any of the criteria set forth in paragraphs (c)(3)(v), (c)(3)(ix), and (c)(3)(xiii) of this section and it has not so failed during the 12 months preceding its failure to meet the criteria, it shall be placed on probation, but if it has so failed at any time during those 12 months, its accreditation will be revoked.

(3) * * *

(ii) Substituted any analytical result from any other laboratory for its own.

* * * * *

PART 381—POULTRY PRODUCTS INSPECTION REGULATIONS

18. The authority citation for part 381 is revised to read as follows:

Authority: 7 U.S.C. 138F; 7 U.S.C. 450; 21 U.S.C. 451–470; 7 CFR 2.17, 2.55.

19. Paragraph (a) of § 381.153 is amended by removing the definitions for "Accredited Laboratory Coordinator"; by revising the definitions for "AOAC Methods," "Comparison Mean," "Correct Chemical Residue Identification," "CUSUM," "Interlaboratory Accreditation Maintenance Check Sample," "Minimum Proficiency Level," "Official Sample," "Standardized Difference," "Standardizing Value," and "Systematic Laboratory Difference"; by adding, in alphabetical order, new definitions for "Accreditation," "Refusal of Accreditation," "Revocation of Accreditation," "Standardizing Constant," "Suspension of Accreditation," and "Variance"; and by revising Tables 1 and 2 to read as follows:

§ 381.153 Accreditation of chemistry laboratories.

(a) * * *

Accreditation—Determination by FSIS that a laboratory is qualified to analyze official samples of product subject to regulations in this subchapter and subchapter A of this chapter for the presence and amount of all four food chemistry analytes (protein, moisture, fat, and salt); or a determination by FSIS that a laboratory is qualified to analyze official samples of product subject to regulations in this subchapter and subchapter A of this chapter for the presence and amount of one of several classes of chemical residue, in accordance with the requirements of the Accredited Laboratory Program. Accreditations are granted separately for the food chemistry analysis of official samples and for the analysis of such samples for any one of the several classes of chemical residue. A laboratory may hold more than one accreditation.

* * * * *

AOAC methods—Methods of chemical analysis, section 24.001 through 24.071, AOAC International; in the "Official Methods of Analysis of AOAC International," 15th edition 1990; published by AOAC International, 2200 Wilson Boulevard, Suite 400, Arlington, VA 22207. This publication is incorporated by reference and was

originally approved by the Director, Office of the Federal Register, on February 19, 1987.[1]

* * * * *

Comparison Mean—The average, for a sample, of all accredited and FSIS laboratories' average results, each of which has a large deviation measure of zero, except when only two laboratories perform the analysis, as in the case of split sample analysis by both an accredited laboratory and an FSIS laboratory. In the latter case, the comparison mean is the average of the two laboratories' results. For food chemistry, a result for a laboratory is the obtained analytical value; for chemical residues, a result is the logarithmic transformation of the obtained analytical value.

Correct chemical residue identification—Correct identification by a laboratory of a chemical residue whose concentration, in a sample, is equal to or greater than the minimum reporting level for that residue, as determined by the median of all positive analytical values obtained by laboratories analyzing the sample. Failure of a laboratory to report the presence of such a chemical residue is considered a misidentification. In addition, reporting the presence of a residue at a level equal to or above the minimum reporting level that is not reported by 90 percent or more of all other laboratories analyzing the sample, is considered a misidentification.

CUSUM—A class of statistical procedures for assessing whether or not a process is "in control". Each CUSUM value is constructed by accumulating incremental values obtained from observed results of the process, and then determined to either exceed or fall within acceptable limits for that process. The initial CUSUM values for each laboratory whose application for accreditation is accepted are set at zero. The four CUSUM procedures are:

(1) Positive systematic laboratory difference CUSUM (CUSUM–P)—monitors how consistently an accredited laboratory gets numerically greater results than the comparison mean;

(2) Negative systematic laboratory difference CUSUM (CUSUM–N)—monitors how consistently an accredited laboratory gets numerically smaller results than the comparison mean;

(3) Variability CUSUM (CUSUM–V)—monitors the average "total discrepancy" (i.e., the combination of the random fluctuations and systematic differences) between an accredited laboratory's results and the comparison mean;

(4) Individual large discrepancy CUSUM (CUSUM–D)—monitors the magnitude and frequency of large differences between the results of an accredited laboratory and the comparison mean.

* * * * *

Interlaboratory accreditation maintenance check sample—A sample prepared and sent by FSIS to a non-Federal laboratory to assist in determining if acceptable levels of analytical capability are being maintained by the accredited laboratory.

* * * * *

Minimum proficiency level—The minimum concentration of a residue at which an analytical result will be used to assess a laboratory's quantification capability. This concentration is an estimate of the smallest concentration for which the average coefficient of variation (CV) for reproducibility (i.e., combined within and between laboratory variability) does not exceed 20 percent. (See Table 2)

* * * * *

Official Sample—A sample selected by an inspector or inspection service employee in accordance with FSIS procedures for regulatory use.

* * * * *

Refusal of Accreditation—An action taken when a laboratory which is applying for accreditation is denied the accreditation.

* * * * *

Revocation of Accreditation—An action taken against a laboratory which removes its right to analyze official samples.

* * * * *

Standardizing Constant—The number which is the result of a mathematical adjustment to the "standardized value." Specifically, the number equals the square root of the expected variance of the difference between the accredited or applying laboratory's result and the comparison mean on a sample, taking into consideration the standardizing value, the correlation and number of repeated results by a laboratory on a sample, and the number of laboratories that analyzed the sample.

Standardized Difference—The quotient of the difference between a laboratory's result on a sample and the comparison mean of the sample divided by the standardizing constant.

Standardizing Value—A number representing the performance standard deviation of an individual result (see Tables 1 and 2 and footnotes to the Tables for determining exact procedures for calculation).

Suspension of Accreditation—Action taken against a laboratory which temporarily removes its right to analyze official samples. Suspension of accreditation ends when accreditation is either fully restored or revoked.

Systematic laboratory difference—A comparison of one laboratory's results with the comparison means on samples that shows, on average, a consistent relationship. A laboratory that is reporting, on average, numerically greater results than the comparison mean has a positive systematic laboratory difference and, conversely, numerically smaller results indicate a negative systematic laboratory difference.

* * * * *

Variance—The expected average of the squared differences of sample results from an expected sample mean.

TABLE 1.—STANDARDIZING VALUES FOR FOOD CHEMISTRY

(By analyte)

Moisture	Protein [1]	Fat [2]	Salt [3]
0.57	0.060	0.26 (0.30)	0.127

[1] To obtain the standardizing value for a sample the appropriate entry in this column is multiplied by $X^{0.65}$ where X is the comparison mean of the sample.

[2] To obtain the standardizing value for a sample, the appropriate entry in this column is multiplied by $X^{0.25}$, where X is the comparison mean of the sample. The appropriate entry is equal to the value in parentheses when X is equal to or greater than 12.5 percent, otherwise it is equal to 0.26.

[3] To obtain the standardizing value for a sample, when the comparison mean of the sample, X, is less than 1.0 percent, the standardizing value equals 0.127, otherwise the appropriate entry is multiplied by $X^{0.25}$. When X is equal to or greater than 4.0 percent for dry salami and pepperoni products, the standardizing value equals 0.22.

[1] Copies of this publication are on file with the Director, Office of the Federal Register, and may be purchased from AOAC International at the address indicated.

TABLE 2.—MINIMUM PROFICIENCY LEVELS, PERCENT EXPECTED RECOVERIES (QC AND QA), AND STANDARDIZING VALUES FOR CHEMICAL RESIDUES

Class of residues	Minimum proficiency level	Percent expected recovery (QC and QA)	Standardizing value [3]
Chlorinated Hydrocarbons: [1]			
Aldrin	0.10 ppm	80–110	0.20
Benzene Hexachloride	0.10. ppm	80–110	0.20
Chlordane	0.30 ppm	80–110	0.20
Dieldrin	0.10 ppm	80–110	0.20
DDT	0.15 ppm	80–110	0.20
DDE	0.10 ppm	80–110	0.20
TDE	0.15 ppm	80–110	0.20
Endrin	0.10 ppm	80–110	0.20
Heptachlor	0.10 ppm	80–110	0.20
Heptachlor Epoxide	0.10 ppm	80–110	0.20
Lindane	0.10 ppm	80–110	0.20
Methoxychlor	0.50 ppm	80–110	0.20
Toxaphene	1.00 ppm	80–110	0.20
Hexachlorobenzene	0.10 ppm	80–110	0.20
Mirex	0.10 ppm	80–110	0.20
Nonachlor	0.15 ppm	80–110	0.20
Polychlorinated Biphenyls	0.50 ppm	80–110	0.20
Arsenic [2]	0.20 ppm	90–105	0.25
Sulfonamides [2]	0.08 ppm	70–120	0.25
Volatile Nitrosamine [2]	5 ppb	70–110	0.25

[1] Laboratory statistics are computed over all results (excluding PCB results), and for specific chemical residues.
[2] Laboratory statistics are only computed for specific chemical residues.
[3] The standardizing value of all initial accreditation and probationary check samples computations is 0.15.

20. Paragraph (b)(1) of § 381.153 is revised to read as follows:

§ 381.153 Accreditation of chemistry laboratories.

* * * * *

(b) * * *

(1) *Applying for accreditation.* Application for accreditation shall be made on designated forms provided by FSIS, or otherwise in writing, by the owner or manager of a non-Federal analytical laboratory and sent to the Accredited Laboratory Program, room 516–A, Annex Building, Food Safety and Inspection Service, U.S. Department of Agriculture, 300 12th Street SW., Washington DC, 20250–3700, and shall specify the kinds of accreditation that are wanted by the owner or manager of the laboratory. A laboratory whose accreditation has been refused or revoked may reapply for accreditation after 60 days from the effective date of that action, and must provide written documentation specifying what corrections were made.

(i) At the time that an Application for Accreditation is filed with the Accredited Laboratory Program, FSIS, and annually thereafter upon receipt of the bill issued by FSIS on the anniversary date of each accreditation, the management of a laboratory shall reimburse the program at the rate specified in 9 CFR 391.5 for the cost of each accreditation that is sought by the laboratory or that the laboratory holds.

(ii) Simultaneously with the initial application for accreditation, the management of a laboratory shall forward a check, bank draft, or money order in the amount specified in 9 CFR 391.5 made payable to the U.S. Department of Agriculture along with the completed application for the accreditation(s) sought for the laboratory. Accreditation will not be granted or continued, without further procedure, for failure to pay the accreditation fee(s). The fee(s) paid shall be nonrefundable and shall be credited to the account from which the expenses of the laboratory accreditation program are paid.

(iii) Annually on the anniversary date of each accreditation, FSIS will issue a bill in the amount specified in 9 CFR 391.5.

(iv) Bills are payable upon receipt by check, bank draft, or money order made payable to the U.S. Department of Agriculture and become delinquent 30 days from the date of the bill. Accreditation will be terminated without further procedure for having a delinquent account. The fee(s) paid shall be nonrefundable and shall be credited to the account from which the expenses of the Accredited Laboratory Program are paid.

(v) The accreditation of a laboratory that was accredited by FSIS on or before December 13, 1993 and was not on probation and whose accreditation on that date was not in suspension or revocation shall be continued, provided that such laboratory reapply for accreditation in accordance with the provisions of this paragraph (b)(1) by January 13, 1994 (30 days of the effective date of this section), and that the reapplication be accepted by the Agency. The CUSUM values for such laboratory will be reset at zero upon acceptance of its reapplication. The accreditation of a laboratory that is on probation shall be continued, provided that the laboratory reapply for accreditation by February 11, 1994 (60 days of the effective date of this section), that the reapplication be accepted by the Agency, and that the laboratory satisfy the terms of the probation.

* * * * *

21. Paragraphs (b)(2)(ii) introductory text, (b)(3)(i), (b)(3)(vi), (b)(3)(vii), (b)(3)(ix), introductory text, (b)(3)(x)(C), (b)(3)(xi) of § 381.152 are revised; and new paragraphs (b)(2)(iv) and (b)(3)(xii) are added to read as follows:

§ 381.153 Accreditation of chemistry laboratories.

* * * * *

(b) * * *

(2) * * *

(ii) Demonstrate acceptable levels of systematic laboratory difference, variability, and individual large deviations in the analyses of moisture, protein, fat, and salt content using AOAC methods. An applying laboratory

will successfully demonstrate these capabilities if its moisture, protein, fat, and salt results from a 36 check sample accreditation study each satisfy the criteria presented below.[2] If the laboratory's analysis of an analyte (or analytes) from the first set of 36 check samples does not meet the criteria for obtaining accreditation, a second set of 36 check samples will be provided within 30 days following the date of receipt by FSIS of a request from the applying laboratory. The second set of samples shall be analyzed for only the analyte(s) for which unacceptable initial results had been obtained by the laboratory. If the results of the second set of samples do not meet the accreditation criteria, the laboratory may reapply after a 60-day waiting period, commencing from the date of refusal of accreditation by FSIS. At that time, a new application, all fees, and all documentation of corrective action required for accreditation must be submitted.

* * * * *

(iv) Pay the accreditation fee by the date required.

(3) * * *

(i) Report analytical results of the moisture, protein, fat, and salt content of official samples, weekly, on designated forms to the FSIS Eastern Laboratory, College Station Road, P.O. Box 6085, Athens, GA 30604, or to the address designated by the Quality Systems Branch, FSIS Chemistry Division.

* * * * *

(vi) Inform the Accredited Laboratory Program, Room 516–A, Annex Building, Food Safety and Inspection Service, U.S. Department of Agriculture, 300 12th Street, SW., Washington, DC 20250–3700, by certified or registered mail, within 30 days of any change in the laboratory's ownership, officers, directors, supervisory personnel, or other responsibly connected individual or entity.

(vii) Permit any duly authorized representative of the Secretary to perform both announced and unannounced on-site laboratory reviews of facilities and records during normal business hours, and to copy any records pertaining to the laboratory's participation in the Accredited Laboratory Program.

* * * * *

(ix) Demonstrate that acceptable limits of systematic laboratory difference, variability, and individual large deviations are being maintained in the analyses of moisture, protein, fat, and salt content. An accredited laboratory will successfully demonstrate the maintenance of these capabilities if its moisture, protein, fat, and salt results from interlaboratory accreditation maintenance check samples and/or split samples satisfy the criteria presented in this paragraph (b)(3)(ix).[5]

* * * * *

(x) * * *

(C) Satisfy criteria for check samples specified in paragraphs (b)(2)(ii) (A), (B), and (C) of this section.

(xi) Expeditiously report analytical results of official samples to the FSIS Eastern Laboratory, College Station Road, P.O. Box 6085, Athens, GA 30604, or to the address designated by the Quality Systems Branch, FSIS Chemistry Division. The Federal inspector at any establishment may assign the analysis of official samples of an FSIS laboratory if, in the inspector's judgment, there are delays in receiving test results on official samples from an accredited laboratory.

(xii) Pay the required accreditation fee when it is due.

* * * * *

22. Footnote 4 to paragraph (b)(2)(ii)(C) of § 381.153 is renumbered as footnote 3; and footnote 5 to paragraph (b)(3)(viii) of § 381.153 is renumbered as footnote 4 and revised to read as follows:

[4] Copies of the "Official Methods of Analysis of AOAC International," 15th edition, 1990, are on file with the Director, Office of the Federal Register, and may be purchased from AOAC International, 2200 Wilson Boulevard, Suite 400, Arlington, VA 22201.

23. Footnote 6 to § 381.153(b)(3)(ix) introductory text is renumbered as footnote 5 and footnote 4 to paragraph (b)(3)(ix)(C) introductory text is renumbered as footnote 6 and revised to read as follows:

[6] *See* footnote 3.

24. Paragraph (c)(1) of § 381.153 is revised to read as follows:

§ 381.153 Accreditation of chemistry laboratories.

* * * * *

(c) * * *

(1) *Applying for accreditation.* Application for accreditation shall be made on designated forms provided by FSIS, or otherwise in writing, by the owner or manager of the non-Federal analytical laboratory and sent to the Accredited Laboratory Program, room 516–A, Annex Building, Food Safety and Inspection Service, U.S. Department of Agriculture, 300 12th Street, SW., Washington, DC 20250–3700, and shall specify the kinds of accreditation that are wanted by the owner or manager of the laboratory. A laboratory whose accreditation has been refused or revoked may reapply for accreditation after 60 days from the effective date of that action, and must provide written documentation specifying what corrections were made.

(i) At the time that an Application for Accreditation is filed with the Accredited Laboratory Program, FSIS, and annually thereafter upon receipt of the bill issued by FSIS on the anniversary date of each accreditation, the management of a laboratory shall reimburse the program at the rate specified in 9 CFR 391.5 for the cost of each accreditation that is sought by the laboratory or that the laboratory holds.

(ii) Simultaneously with the initial application for accreditation, the management of a laboratory shall forward a check, bank draft, or money order in the amount specified in 9 CFR 391.5 made payable to the U.S. Department of Agriculture along with the completed application for the accreditation(s) sought by the laboratory. Accreditation will not be granted or continued, without further procedure, for failure to pay the accreditation fee(s). The fee(s) paid shall be nonrefundable and shall be credited to the account from which the expenses of the laboratory accreditation program are paid.

(iii) Annually on the anniversary date of each accreditation, FSIS will issue a bill in the amount specified in 9 CFR 391.5.

(iv) Bills are payable upon receipt by check, bank draft, or money order made payable to the U.S. Department of Agriculture and become delinquent 30 days from the date of the bill. Accreditation will be terminated without further procedure for having a delinquent account. The fee(s) paid shall be nonrefundable and shall be credited to the account from which the expenses of the Accredited Laboratory Program are paid.

(v) The accreditation of a laboratory that was accredited by FSIS on or before December 13, 1993 and was not on probation and whose accreditation on that date was not in suspension or revocation shall be continued, provided that such laboratory reapply for accreditation in accordance with the provisions of this paragraph (c)(1) by January 12, 1994 (30 days of the effective date of this section), and that the reapplication be accepted by the Agency. The CUSUM values for such laboratory will be reset at zero upon

[2] All statistical computations are rounded to the nearest tenth, except where otherwise noted.

[5] All statistical computations are rounded to the nearest tenth, except where otherwise noted.

acceptance of its reapplication. The accreditation of a laboratory that is on probation shall be continued, provided that the laboratory reapply for accreditation by February 11, 1994 (60 days of the effective date of this section), that the reapplication be accepted by the Agency, and that the laboratory satisfy the terms of the probation.

* * * * *

25. Paragraph (c)(2)(ii) introductory text of § 381.153 is revised and a new paragraph (c)(2)(iv) is added to read as follows:

§ 381.153 Accreditation of chemistry laboratories.

* * * * *

(c) * * *

(2) * * *

(ii) Demonstrate acceptable limits of systematic laboratory difference, variability, individual large deviations, recoveries, and proper identification in the analysis of the class of chemical residues for which application was made, using FSIS approved procedures. An applying laboratory will successfully demonstrate these capabilities if its analytical results for each specific chemical residue provided in a check sample accreditation study containing a minimum of 14 samples satisfy the criteria presented in this paragraph (c)(2)(ii).[7] In addition, if the laboratory is requesting accreditation for the analysis of chlorinated hydrocarbons, all analytical results for the residue class must collectively satisfy the criteria. [Conformance to criteria (c)(2)(ii) (A), (B), (C), (D), (E), and (F) of this section will only be determined when six or more analytical results with associated comparison means at or above the logarithm of the minimum proficiency level are available.] If the results of the first set of check samples do not meet these criteria for obtaining accreditation, a second set of at least 14 samples will be provided within 30 days following the date of receipt by FSIS of a request from the applying laboratory. If the results of the second set of samples do not meet accreditation criteria, the laboratory may reapply after a 60-day waiting period, commencing from the date of refusal of accreditation by FSIS. At that time, a new application, all fees, and all documentation of corrective action required for accreditation must be submitted.

* * * * *

(iv) Pay the accreditation fee by the date required.

* * * * *

[7] All statistical computations are rounded to the nearest tenth, unless otherwise noted.

26. Footnote 9 to paragraph (c)(2)(ii)(C) of § 381.153 is renumbered as footnote 8; footnotes 10 and 11 to § 381.153 (c)(3)(ix) introductory text are renumbered as footnotes 9 and 10, respectively; and footnote 12 to § 381.153 (c)(3)(ix)(A)(*1*) introductory text is renumbered as footnote 11.

27. Footnote 13 to § 381.153 (c)(3)(ix)(A)(*2*) introductory text is renumbered as footnote 12 and revised to read:

[12] *See* footnote 11.

28. Footnote 14 to § 381.153 (c)(3)(ix)(B) introductory text is renumbered as footnote 13 and footnote 15 to paragraph (c)(3)(ix)(C) introductory text of § 381.153 is renumbered as footnote 14.

29. Footnote 16 to § 381.153 (c)(3)(xiii)(A)(*1*) introductory text is renumbered as footnote 15 and footnote 17 to paragraph (c)(3)(xiii)(A)(*2*) introductory text is renumbered as footnote 16; and the text of each of these footnotes is revised to read, "*See* footnote 11."

30. Footnote 18 to § 381.153 (c)(3)(xiii)(B) introductory text is renumbered as footnote 17 and the text of this footnote is revised to read, "*See* footnote 13."

31. Footnote 19 to § 381.153 (c)(3)(xiii)(C) is renumbered as footnote 18.

32. Paragraph (c)(3)(i) of § 381.153 is removed and reserved.

33. Paragraphs (c)(3)(vi), (c)(3)(vii), (c)(3)(ix) introductory text, (c)(3)(x)(C), and (c)(3)(xi) of § 381.153 are revised and a new paragraph (c)(3)(xiv) added to read as follows:

§ 381.153 Accreditation of chemistry laboratories.

* * * * *

(c) * * *

(3) * * *

(vi) Inform the Accredited Laboratory Program, Room 516–A, Annex Building, Food Safety and Inspection Service, U.S. Department of Agriculture, 300 12th Street, SW., Washington, DC 20250–3700, by certified or registered mail, within 30 days when there is any change in the laboratory's ownership, officers, directors, supervisory personnel, or any other responsibly connected individual or entity.

(vii) Permit any duly authorized representative of the Secretary to perform both announced and unannounced on-site laboratory reviews of facilities and records during normal business hours, and to copy any records pertaining to the laboratory's participation in the Accredited Laboratory Program.

* * * * *

(ix) Demonstrate that acceptable limits of systematic laboratory difference, variability, and individual large deviations are being maintained in the analysis of samples, in the chemical residue class for which accreditation was granted. A laboratory will successfully demonstrate the maintenance of these capabilities if its analytical results for each specific chemical residue found in interlaboratory accreditation maintenance check samples and/or split samples satisfy the criteria presented below.[9] [10] In addition, if the laboratory is accredited for the analysis of chlorinated hydrocarbons, all analytical results for the residue class must collectively satisfy the criteria.

* * * * *

(x) * * *

(C) Satisfy criteria for check samples as specified in paragraphs (c)(2)(ii) (A), (B), (C), (D), (E), and (F) of this section

(xi) Expeditiously report analytical results of official samples to the FSIS Eastern Laboratory, College Station Road, P.O. Box 6085, Athens, GA 30604, or to the address designated by the Quality Systems Branch, FSIS Chemistry Division. The Federal inspector at any establishment may assign the analysis of official samples to an FSIS laboratory if, in the judgment of the inspector, there are delays in receiving test results on official samples from an accredited laboratory.

* * * * *

(xiv) Pay the accreditation fee when it is due.

* * * * *

34. Paragraphs (g)(1), (g)(2), (g)(3)(ii) of § 381.153 are revised to read as follows:

§ 381.153 Accreditation of chemistry laboratories.

* * * * *

(g) * * *

(1) An accredited laboratory which is accredited to perform analysis under paragraph (b) of this section shall have its accreditation revoked for failure to meet any of the requirements of paragraph (b)(3) except for the following circumstances. If the accredited laboratory fails to meet the criteria for reporting the analytical results on interlaboratory accreditation maintenance check samples as set forth in paragraph (b)(3)(v) of this section or if, at any time, the CUSUM results from

[9] All statistical computations are rounded to the nearest tenth, except where otherwise noted.

[10] An analytical result will only be used in the statistical evaluation of the laboratory if the associated comparison mean is equal to or greater than the logarithm of the minimum proficiency level for the residue.

the analysis of such interlaboratory accreditation maintenance check samples and/or split samples have not satisfied the criteria specified in paragraph (b)(3)(ix) of this section and there have been, during the previous 12 months, no other occasions on which such CUSUM results have not satisfied such criteria, the laboratory shall be placed on probation; but if there have been such other occasions during those 12 months, the laboratory's accreditation will be revoked.

(2) An accredited laboratory which is accredited to perform analysis for a class of chemical residues under paragraph (c) of this section shall have the accreditation to perform this analysis revoked if it fails to meet any of the requirements in paragraph (c)(3) of this section except for the following circumstances. If the accredited laboratory fails to meet any of the criteria set forth in paragraphs (c)(3)(v), (c)(3)(ix), and (c)(3)(xiii) of this section and it has not so failed during the 12 months preceding its failure to meet the criteria, it shall be placed on probation, but if it has so failed at any time during those 12 months, its accreditation will be revoked.

(3) * * *

(ii) Substituted any analytical result from any other laboratory for its own.

* * * * *

PART 391—FEES AND CHARGES FOR INSPECTION SERVICES AND LABORATORY ACCREDITATION

35. The part heading is revised to read as shown above.

36. The authority citation for part 391 is revised to read as follows:

Authority: 7 U.S.C. 138f; 7 U.S.C. 394, 1622, 1624; 21 U.S.C. 451 *et seq.;* 21 U.S.C. 601–695; 7 CFR 2.17 (g) and (i), 2.55.

37. Part 391 is amended by adding a new § 391.5 to read as follows:

§ 391.5 Laboratory accreditation fees.

(a) The annual fee for the initial accreditation and maintenance of accreditation provided pursuant to §§ 318.21 and 381.153 shall be $3,500 per accreditation.

(b) Laboratories that request special onsite inspections shall pay FSIS the actual cost of reasonable travel and other expenses necessary to perform the unscheduled or non-routine onsite inspections.

Done at Washington, DC, on December 6, 1993.

Eugene Branstool,

Assistant Secretary, Marketing and Inspection Services.

[FR Doc. 93–30211 Filed 12–10–93; 8:45 am]

BILLING CODE 3410–DM–M

federal register

Monday
December 13, 1993

Part IV

Department of the Interior

Bureau of Indian Affairs

Indian Gaming; St. Regis Mohawk Tribe and State of New York; Notice

DEPARTMENT OF THE INTERIOR

Bureau of Indian Affairs

Indian Gaming; St. Regis Mohawk Tribe and State of New York

AGENCY: Bureau of Indian Affairs, Interior.

ACTION: Notice of approved Tribal-State Compact.

SUMMARY: Pursuant to 25 U.S.C. 2710, of the Indian Gaming Regulatory Act of 1988 (Pub. L. 100–497), the Secretary of the Interior shall publish, in the Federal Register, notice of approved Tribal-State Compacts for the purpose of engaging in Class III (casino) gaming on Indian reservations. The Assistant Secretary—Indian Affairs, Department of the Interior, through her delegated authority, has approved the Tribal State Compact Between the St. Regis Mohawk Tribe and the State of New York, which was executed on June 9, 1993.

DATES: This action is effective December 13, 1993.

FOR FURTHER INFORMATION CONTACT: Hilda Manuel, Director, Indian Gaming Management Staff, Bureau of Indian Affairs, Washington, DC 20240, (202) 219–4066.

Dated: December 4, 1993.

Ada E. Deer,

Assistant Secretary—Indian Affairs.

[FR Doc. 93–30377 Filed 12–10–93; 8:45 am]

BILLING CODE 4310–02–P

federal register

Monday
December 13, 1993

Part V

Federal Emergency Management Agency

Fee for Services to Support FEMA's Offsite Radiological Emergency Preparedness (REP) Program; Notice

FEDERAL EMERGENCY MANAGEMENT AGENCY

Fee for Services to Support FEMA's Offsite Radiological Emergency Preparedness (REP) Program

AGENCY: Federal Emergency Management Agency (FEMA).

ACTION: Notice.

SUMMARY: In accordance with FEMA's interim rule, 44 CFR part 354, published in the **Federal Register** on July 1, 1993 (58 FR 35770), FEMA has established a fiscal year (FY) 1993 hourly rate of $122.88 for assessing and collecting fees from Nuclear Regulatory Commission (NRC) licensees for services provided by FEMA personnel for FEMA's REP Program.

DATES: The user fee hourly rate is effective for FY 1993 (October 1, 1992 to September 30, 1993).

FOR FURTHER INFORMATION CONTACT: Linda Vasta, Chief, Regulatory Services Coordination Unit, Preparedness, Training and Exercises Directorate, Federal Emergency Management Agency, Washington, DC 20472 (202) 646–4570.

SUPPLEMENTARY INFORMATION: As authorized by Public Law 102–389 (106 Stat. 1571–1619), an hourly user fee rate of $122.88 will be charged to NRC licensees of commercial nuclear power plants for all site-specific and generic services provided by FEMA personnel for FEMA's REP Program under the interim rule, 44 CFR part 354, published in the **Federal Register** on July 1, 1993, 58 FR 35770. All funds collected under this rule will be deposited in the U.S. Department of the Treasury to offset appropriated funds obligated by FEMA for its REP Program.

The hourly rate is established on the basis of the methodology set forth in the referenced FEMA interim rule at 44 CFR 354.4(a), "Determination of costs for FEMA personnel," and will be used to assess and collect fees for site-specific and generic services rendered by FEMA personnel. For FY 1993, the total Salaries and Expenses funds obligated for FY 1993 was $5,893,031.94 and the total number of site-specific hours expended was 47,958.5. Applying the formula set forth in the interim rule, the FY 1993 hourly rate is $122.88.

The establishment of this hourly rate is intended only to address charges for services provided by FEMA personnel, not charges for services provided by FEMA contractors. Contractor services will be charged under the interim rule at 44 CFR 354.4 (b) and (c) for the recovery of appropriated funds obligated for the Emergency Management Planning and Assistance (EMPA) portion of FEMA's REP Program budget.

In light of FEMA's reorganization, effective November 28, 1993, and the NRC's reexamination of its own user fee policy and rule, which FEMA used as a model for its interim rule, FEMA does not plan to publish a final rule at this time. Comments submitted in response to the publication of the interim rule, including those addressing the determination of the hourly rate and its use in assessing user fees, will be addressed and incorporated in either a final rule or a new proposed rule.

Dated: December 3, 1993.

Dennis H. Kwiatkowski,

Deputy Associate Director.

[FR Doc. 93–30204 Filed 12–10–93; 8:45 am]

BILLING CODE 6718–20–P

federal register

Monday
December 13, 1993

Part VI

Department of Health and Human Services

Food and Drug Administration

21 CFR Part 136, et al.

Food Standards: Amendment of the Standards of Identity for Enriched Grain Products to Require Addition of Folic Acid; Correction; Proposed Rule

DEPARTMENT OF HEALTH AND HUMAN SERVICES

Food and Drug Administration

21 CFR Parts 136, 137, and 139

[Docket No. 91N–100S]

Food Standards: Amendment of the Standards of Identity for Enriched Grain Products to Require Addition of Folic Acid; Correction

AGENCY: Food and Drug Administration, HHS.

ACTION: Proposed rule; correction.

SUMMARY: The Food and Drug Administration (FDA) is correcting a proposed rule that appeared in the **Federal Register** of October 14, 1993 (58 FR 53305). The document proposed to amend the standards of identity for several enriched cereal-grain products to require the addition of folic acid. The document was published with some errors. This document corrects those errors.

DATES: Written comments by December 13, 1993. The agency is proposing that any final rule that may issue, based on this proposal, became effective 1 year after date of publication in the **Federal Register.**

FOR FURTHER INFORMATION CONTACT: Felicia B. Satchell, Center for Food Safety and Applied Nutrition (HFS–158), Food and Drug Administration, 200 C St. SW., Washington, DC 20204, 202–205–5099.

SUPPLEMENTARY INFORMATION: In FR Doc. 93–25030, appearing on page 53305 in the **Federal Register** of Thursday, October 14, 1993, the following corrections are made:

1. On page 53306, in the second column, in the first full paragraph, in line 6, the words "Folic Acid" are corrected to read "Folate."

2. On page 53307, in the third column, in the second full paragraph, in line 9, the word "these" is corrected to read "cereal-grain".

3. On page 53308, in the first column, in the first full paragraph, in line 8, "0.117" and "0.131" are corrected to read "0.119" and "0.133", respectively; in line 18, "0.196" is corrected to read "0.198"; and in the second column, in the third full paragraph, beginning in line 6, the phrase "0.031 mg/100 g (0.141 mg/lb)" is corrected to read "0.048 mg/100 g (0.217 mg/lb)".

4. On page 53309, in the third column, in the 12th line from the bottom, the sentence beginning with the words "The total cost * * * " is corrected to read "The total cost of this option in the first year is estimated to be $27 million plus the cost of separate production runs for these products exported to and imported from certain foreign countries." After this sentence, add the following sentence "The cost of this option in each year after the first year is estimated to be approximately $7 million per year plus the cost of separate production runs for these products exported to and imported from certain foreign countries."

5. On page 53310, in the first column, in line 6, the sentence beginning with the words "Total costs * * * " is corrected to read "The total cost of this option in the first year is estimated to be $25 million plus the cost of separate production runs for these products exported to and imported from certain foreign countries." After this sentence, add the following sentence "The total cost of this option in each year after the first year is estimated to be $5 million plus the cost of separate production runs for these products exported to and imported from certain foreign countries."; in the fourth full paragraph, the sentence beginning with the words "Total costs * * * " is corrected to read "The total cost of this option in the first year is estimated to be $1.88 billion plus the cost of separate production runs for these products exported to and imported from certain foreign countries." After this sentence, add the following sentence "The total cost of this option in each year after the first year is estimated to be $1.86 billion plus the cost of separate production runs for these products exported to and imported from certain foreign countries."; in the third column, in the fifth full paragraph, the sentence beginning with the words "The costs * * * " is corrected to read "The cost of the proposed action in the first year is estimated to be approximately $27 million plus the cost of separate production runs for products exported to and imported from certain foreign countries." After this sentence, add the following sentence "The cost of the proposed action in each year after the first year is estimated to be approximately $7 million plus the cost of separate production runs for products exported to and imported from certain foreign countries."

6. On page 53311, in the first column, in reference 1, the term "CDC" is corrected to read "Department of Health and Human Services, Public Health Service"; and in reference 7, the phrase "pp. 31–42, 55–76, and 85–102" is added after the word "Prepared".

§ 137.185 [Corrected]

7. On page 53311, in the third column, in § 137.185 *Enriched self-rising flour*, in paragraph (a), in line 4, "22" is corrected to read "20".

§ 139.115 [Corrected]

8. On page 53312, in the first column, in § 139.115 *Enriched macaroni products*, in paragraph (a)(1), in the last line, "16" is corrected to read "16.5".

§ 139.122 [Corrected]

9. On page 53312, in the second column, in § 139.122 *Enriched nonfat milk macaroni products*, in paragraph (a)(3), in the last line, "16" is corrected to read "16.5".

Dated: December 9, 1993.

Michael R. Taylor,

Deputy Commissioner for Policy.

[FR Doc. 93–30542 Filed 12–10–93; 11:44 am]

BILLING CODE 4160–01–F

Reader Aids

Federal Register

Vol. 58, No. 237

Monday, December 13, 1993

INFORMATION AND ASSISTANCE

Federal Register

Index, finding aids & general information	202–523–5227
Public inspection desk	523–5215
Corrections to published documents	523–5237
Document drafting information	523–3187
Machine readable documents	523–3447

Code of Federal Regulations

Index, finding aids & general information	523–5227
Printing schedules	523–3419

Laws

Public Laws Update Service (numbers, dates, etc.)	523–6641
Additional information	523–5230

Presidential Documents

Executive orders and proclamations	523–5230
Public Papers of the Presidents	523–5230
Weekly Compilation of Presidential Documents	523–5230

The United States Government Manual

General information	523–5230

Other Services

Data base and machine readable specifications	523–3447
Guide to Record Retention Requirements	523–3187
Legal staff	523–4534
Privacy Act Compilation	523–3187
Public Laws Update Service (PLUS)	523–6641
TDD for the hearing impaired	523–5229

ELECTRONIC BULLETIN BOARD

Free **Electronic Bulletin Board** service for Public Law numbers, and Federal Register finding aids.	202–275–1538, or 275–0920

FEDERAL REGISTER PAGES AND DATES, DECEMBER

63277–63518.....1
63519–63884.....2
63885–64100.....3
64101–64364.....6
64365–64454.....7
64455–64668.....8
64669–64870.....9
64871–65098.....10
65099–65276.....13

CFR PARTS AFFECTED DURING DECEMBER

At the end of each month, the Office of the Federal Register publishes separately a List of CFR Sections Affected (LSA), which lists parts and sections affected by documents published since the revision date of each title.

1 CFR

11.....64871

3 CFR

Proclamations:

6630.....63277
6631.....63279
6632.....63883
6633.....64363
6634.....64667

Executive Orders:

3406 (Revoked in part by PLO 7020).....64166
12163 (See EO 12884).....64099
12543 (See notice of December 2).....64361
12544 (See Notice of December 2).....64361
12748 (Amended by 12883).....63281
12883.....63281
12884.....64099

Administrative Orders:

Memorandums:

December 1, 1993.....64097

Presidential Determinations:

No. 94–4 of November 19, 1993.....63519
No. 94–6 of December 6, 1993.....65099

Notices:

December 2, 1993.....64361

5 CFR

52.....64365
831.....64366, 65243

7 CFR

1.....64353
54.....64669
75.....64101
301.....64102
400.....64872
401.....64873
920.....65101
955.....64103
981.....64105
987.....64103
989.....64106, 64107
997.....64109
1001.....63283
1002.....63283
1004.....63283
1005.....63283
1007.....63283
1011.....63283
1030.....63283
1033.....63283
1036.....63283
1040.....63283
1044.....63283
1046.....63283
1049.....63283
1065.....63283
1068.....63283
1075.....64110
1079.....63283
1093.....63283
1094.....63283
1096.....63283
1097.....63283
1098.....63283
1099.....63283
1106.....63283
1108.....63283
1124.....63283
1126.....63283
1131.....63283
1135.....63283
1138.....63283
1220.....64670
1427.....65102
1951.....64455

Proposed Rules:

271.....64172
981.....64175
1007.....65135
1040.....64176

8 CFR

Proposed Rules:

210a.....64695

9 CFR

94.....65103
318.....63521, 65254
381.....65254
391.....65254

10 CFR

1.....64110
20.....64110
30.....64110
40.....64110
70.....64110
73.....64110

Proposed Rules:

710.....64509

11 CFR

Proposed Rules:

100.....64190
113.....64190

12 CFR

204.....64112
303.....64455
332.....64458
333.....64460
362.....64462

Proposed Rules:

230.....64190

330.....64521
510.....64695
611.....64442

13 CFR

123.....64672

14 CFR

39.....63523, 63524, 64112, 64114, 64487, 64874, 64875, 64877, 65104, 65115
71.....63293, 63885, 63886, 64116, 64117, 64444, 64488, 64879, 64880
158.....64118

Proposed Rules:

25.....64700
31.....64450
33.....63902
39.....63305, 63307, 64198, 64199, 64200, 64386, 64705, 64707, 64708
71.....63308, 63309, 63903, 63904, 63905, 63906, 64387, 64525, 64710
73.....63908

15 CFR

771.....64674
799.....64674
946.....64088

Proposed Rules:

946.....64202

16 CFR

228.....64881
1000.....64119

Proposed Rules:

307.....63488
309.....64914
1303.....63311

17 CFR

200.....64120
204.....64369
270.....64353

18 CFR

Proposed Rules:

141.....63312
388.....63312

19 CFR

201.....64120

Proposed Rules:

141.....65135
142.....65135
210.....64711

20 CFR

404.....64121, 64882, 64883, 64886, 64890, 65243
416.....63887, 63888, 64883, 64892, 64893

Proposed Rules:

404.....64207
416.....64207

21 CFR

5.....64489
100.....64123
178.....64894
510.....63890
558.....63890
1220.....64137

Proposed Rules:

5.....65139
25.....65139
100.....64208
170.....65139
171.....65139
174.....65139
179.....64526
812.....64209
813.....64209
820.....64353

22 CFR

89.....65118

23 CFR

500.....63442, 64374
625.....64895
626.....63422, 64374
655.....65084

24 CFR

219.....64138
246.....64032
266.....64032
905.....64141
970.....64141

Proposed Rules:

300.....64713
310.....64713
390.....64713
3500.....64066

25 CFR

262.....65246

26 CFR

1.....64897

Proposed Rules:

301.....63541

27 CFR

9.....65123

30 CFR

50.....63528
70.....63528
71.....63528
90.....63528
207.....64899
208.....64899
210.....64899
216.....64899
218.....64899
219.....64899
220.....64899
228.....64899
229.....64899
243.....64899
925.....64142
936.....64374
938.....64151

Proposed Rules:

906.....64210
914.....64212
934.....64528
944.....64529

Proposed Rules:

700.....63316
701.....63316
705.....63316
706.....63316
715.....63316
716.....63316
785.....63316
825.....63316
870.....63316

31 CFR

317.....63529
590.....64904

32 CFR

95.....63293
706.....64678

Proposed Rules:

2.....63542

33 CFR

66.....64153
110.....65140
334.....64383

Proposed Rules:

156.....63544

34 CFR

Proposed Rules:

647.....63870

36 CFR

Proposed Rules:

6.....65141
1220.....64915

37 CFR

1.....64154, 64155
2.....64154
5.....64155
10.....64154, 64155
304.....63294

38 CFR

21.....63529

39 CFR

Proposed Rules:

111.....64918

40 CFR

35.....63876
52.....64155, 64157, 64158, 64161, 64678
60.....64158
81.....64161, 64490
82.....65018
88.....64679
144.....63890
146.....63890
180.....63294, 64492, 64493, 64495, 64496
228.....64497
300.....63531
372.....63496, 63500
721.....63500

Proposed Rules:

52.....63316, 63545, 63547, 63549, 64530
80.....64213
180.....64536, 64538
300.....63551, 64539

41 CFR

101–39.....63631

Proposed Rules:

201–3.....64389
201–4.....64389
201–9.....64389
201–11.....64389
201–18.....64389
201–20.....64389
201–21.....64389
201–22.....64389
201–23.....64389
201–24.....64389
201–39.....64389

42 CFR

405.....63626
414.....63626
424.....65126
491.....63533

Proposed Rules:

67.....63909
413.....65130

43 CFR

Public Land Orders:

7012.....64498
7013.....64165
7014.....64498
7015.....64499
7016.....64499
7017.....64692
7018.....64692
7019.....64693
7020.....64166
7021.....65130

Proposed Rules:

426.....64277
Group 3400.....64919

44 CFR

64.....63899

45 CFR

400.....64499

Proposed Rules:

1370.....64920

46 CFR

1.....65130
67.....65130, 65243
232.....64798
585.....64909

Proposed Rules:

12.....64278
16.....64278

47 CFR

63.....64167
73.....63295, 63296, 63536, 65132, 65133
76.....64168
97.....64384

Proposed Rules:

15.....64541
63.....64280
68.....65153
73.....63318, 63319, 63320, 63321, 63553, 65155
76.....64541

48 CFR

232.....64353
501.....64693
509.....64693
552.....64693

Proposed Rules:

9.....63494
15.....64824
52.....63492, 63494, 64826
904.....63553
917.....63553

936.....63553
939.....63556
943.....63553
952.....63553
970.....63553

49 CFR

541.....63296
544.....63299
571.....63302, 64168
614.....63442, 64374

Proposed Rules:

396.....64923
571.....63321, 65156
583.....63327
659.....64856
1312.....64717

50 CFR

17.....65088
216.....63536, 65133
625.....65134
663.....64169

Proposed Rules:

17.....63328, 63560, 64281, 64828, 64927, 65097
20.....63488
21.....63488
215.....64285
216.....64285
222.....64285
611.....64798
625.....64393
650.....63329
672.....64798

LIST OF PUBLIC LAWS

This is a continuing list of public bills from the current session of Congress which have become Federal laws. It may be used in conjunction with "PLUS" (Public Laws Update Service) on 202–523–6641. The text of laws is not published in the **Federal Register** but may be ordered in individual pamphlet form (referred to as "slip laws") from the Superintendent of Documents, U.S. Government Printing Office, Washington, DC 20402 (phone, 202–512–2470).

H.R. 3450/P.L. 103–182

North American Free Trade Agreement Implementation Act (Dec. 8, 1993; 107 Stat. 2057; 169 pages)

Last List December 9, 1993

CFR CHECKLIST

This checklist, prepared by the Office of the Federal Register, is published weekly. It is arranged in the order of CFR titles, stock numbers, prices, and revision dates.

An asterisk (*) precedes each entry that has been issued since last week and which is now available for sale at the Government Printing Office.

A checklist of current CFR volumes comprising a complete CFR set, also appears in the latest issue of the LSA (List of CFR Sections Affected), which is revised monthly.

The annual rate for subscription to all revised volumes is $775.00 domestic, $193.75 additional for foreign mailing.

Mail orders to the Superintendent of Documents, Attn: New Orders, P.O. Box 371954, Pittsburgh, PA 15250–7954. All orders must be accompanied by remittance (check, money order, GPO Deposit Account, VISA, or Master Card). Charge orders may be telephoned to the GPO Order Desk, Monday through Friday, at (202) 783–3238 from 8:00 a.m. to 4:00 p.m. eastern time, or FAX your charge orders to (202) 512-2233.

Title	Stock Number	Price	Revision Date
1, 2 (2 Reserved)	(869–019–00001–1)	$15.00	Jan. 1, 1993
3 (1992 Compilation and Parts 100 and 101)	(869–019–00002–0)	17.00	[1] Jan. 1, 1993
4	(869–019–00003–8)	5.50	Jan. 1, 1993
5 Parts:			
1–699	(869–019–00004–6)	21.00	Jan. 1, 1993
700–1199	(869–019–00005–4)	17.00	Jan. 1, 1993
1200–End, 6 (6 Reserved)	(869–019–00006–2)	21.00	Jan. 1, 1993
7 Parts:			
0–26	(869–019–00007–1)	20.00	Jan. 1, 1993
27–45	(869–019–00008–9)	13.00	Jan. 1, 1993
46–51	(869–019–00009–7)	20.00	Jan. 1, 1993
52	(869–019–00010–1)	28.00	Jan. 1, 1993
53–209	(869–019–00011–9)	21.00	Jan. 1, 1993
210–299	(869–019–00012–7)	30.00	Jan. 1, 1993
300–399	(869–019–00013–5)	15.00	Jan. 1, 1993
400–699	(869–019–00014–3)	17.00	Jan. 1, 1993
700–899	(869–019–00015–1)	21.00	Jan. 1, 1993
900–999	(869–019–00016–0)	33.00	Jan. 1, 1993
1000–1059	(869–019–00017–8)	20.00	Jan. 1, 1993
1060–1119	(869–019–00018–6)	13.00	Jan. 1, 1993
1120–1199	(869–019–00019–4)	11.00	Jan. 1, 1993
1200–1499	(869–019–00020–8)	27.00	Jan. 1, 1993
1500–1899	(869–019–00021–6)	17.00	Jan. 1, 1993
1900–1939	(869–019–00022–4)	13.00	Jan. 1, 1993
1940–1949	(869–019–00023–2)	27.00	Jan. 1, 1993
1950–1999	(869–019–00024–1)	32.00	Jan. 1, 1993
2000–End	(869–019–00025–9)	12.00	Jan. 1, 1993
8	(869–019–00026–7)	20.00	Jan. 1, 1993
9 Parts:			
1–199	(869–019–00027–5)	27.00	Jan. 1, 1993
200–End	(869–019–00028–3)	21.00	Jan. 1, 1993
10 Parts:			
0–50	(869–019–00029–1)	29.00	Jan. 1, 1993
51–199	(869–019–00030–5)	21.00	Jan. 1, 1993
200–399	(869–019–00031–3)	15.00	Jan. 1, 1993
400–499	(869–019–00032–1)	20.00	Jan. 1, 1993
500–End	(869–019–00033–0)	33.00	Jan. 1, 1993
11	(869–019–00034–8)	13.00	Jan. 1, 1993
12 Parts:			
1–199	(869–019–00035–6)	11.00	Jan. 1, 1993
200–219	(869–019–00036–4)	15.00	Jan. 1, 1993
220–299	(869–019–00037–2)	26.00	Jan. 1, 1993
300–499	(869–019–00038–1)	21.00	Jan. 1, 1993
500–599	(869–019–00039–9)	19.00	Jan. 1, 1993
600–End	(869–019–00040–2)	28.00	Jan. 1, 1993
13	(869–019–00041–1)	28.00	Jan. 1, 1993
14 Parts:			
1–59	(869–019–00042–9)	29.00	Jan. 1, 1993
60–139	(869–019–00043–7)	26.00	Jan. 1, 1993
140–199	(869–019–00044–5)	12.00	Jan. 1, 1993
200–1199	(869–019–00045–3)	22.00	Jan. 1, 1993
1200–End	(869–019–00046–1)	16.00	Jan. 1, 1993
15 Parts:			
0–299	(869–019–00047–0)	14.00	Jan. 1, 1993
300–799	(869–019–00048–8)	25.00	Jan. 1, 1993
800–End	(869–019–00049–6)	19.00	Jan. 1, 1993
16 Parts:			
0–149	(869–019–00050–0)	7.00	Jan. 1, 1993
150–999	(869–019–00051–8)	17.00	Jan. 1, 1993
1000–End	(869–019–00052–6)	24.00	Jan. 1, 1993
17 Parts:			
1–199	(869–019–00054–2)	18.00	Apr. 1, 1993
200–239	(869–019–00055–1)	23.00	June 1, 1993
240–End	(869–019–00056–9)	30.00	June 1, 1993
18 Parts:			
1–149	(869–019–00057–7)	16.00	Apr. 1, 1993
150–279	(869–019–00058–5)	19.00	Apr. 1, 1993
280–399	(869–019–00059–3)	15.00	Apr. 1, 1993
400–End	(869–019–00060–7)	10.00	Apr. 1, 1993
19 Parts:			
1–199	(869–019–00061–5)	35.00	Apr. 1, 1993
200–End	(869–019–00062–3)	11.00	Apr. 1, 1993
20 Parts:			
1–399	(869–019–00063–1)	19.00	Apr. 1, 1993
400–499	(869–019–00064–0)	31.00	Apr. 1, 1993
500–End	(869–019–00065–8)	30.00	Apr. 1, 1993
21 Parts:			
1–99	(869–019–00066–6)	15.00	Apr. 1, 1993
100–169	(869–019–00067–4)	21.00	Apr. 1, 1993
170–199	(869–019–00068–2)	20.00	Apr. 1, 1993
200–299	(869–019–00069–1)	6.00	Apr. 1, 1993
300–499	(869–019–00070–4)	34.00	Apr. 1, 1993
500–599	(869–019–00071–2)	21.00	Apr. 1, 1993
600–799	(869–019–00072–1)	8.00	Apr. 1, 1993
800–1299	(869–019–00073–9)	22.00	Apr. 1, 1993
1300–End	(869–019–00074–7)	12.00	Apr. 1, 1993
22 Parts:			
1–299	(869–019–00075–5)	30.00	Apr. 1, 1993
300–End	(869–019–00076–3)	22.00	Apr. 1, 1993
23	(869–019–00077–1)	21.00	Apr. 1, 1993
24 Parts:			
0–199	(869–019–00078–0)	38.00	Apr. 1, 1993
200–499	(869–019–00079–8)	36.00	Apr. 1, 1993
500–699	(869–019–00080–1)	17.00	Apr. 1, 1993
700–1699	(869–019–00081–0)	39.00	Apr. 1, 1993
1700–End	(869–019–00082–8)	15.00	Apr. 1, 1993
25	(869–019–00083–6)	31.00	Apr. 1, 1993
26 Parts:			
§§ 1.0–1–1.60	(869–019–00084–4)	21.00	Apr. 1, 1993
§§ 1.61–1.169	(869–019–00085–2)	37.00	Apr. 1, 1993
§§ 1.170–1.300	(869–019–00086–1)	23.00	Apr. 1, 1993
§§ 1.301–1.400	(869–019–00087–9)	21.00	Apr. 1, 1993
§§ 1.401–1.440	(869–019–00088–7)	31.00	Apr. 1, 1993
§§ 1.441–1.500	(869-019-00089-5)	23.00	Apr. 1, 1993
§§ 1.501–1.640	(869–019–00090–9)	20.00	Apr. 1, 1993
§§ 1.641–1.850	(869–019–00091–7)	24.00	Apr. 1, 1993
§§ 1.851–1.907	(869–019–00092–5)	27.00	Apr. 1, 1993
§§ 1.908–1.1000	(869–019–00093–3)	26.00	Apr. 1, 1993
§§ 1.1001–1.1400	(869–019–00094–1)	22.00	Apr. 1, 1993
§§ 1.1401–End	(869–019–00095–0)	31.00	Apr. 1, 1993
2–29	(869–019–00096–8)	23.00	Apr. 1, 1993
30–39	(869–019–00097–6)	18.00	Apr. 1, 1993
40–49	(869–019–00098–4)	13.00	Apr. 1, 1993
50–299	(869–019–00099–2)	13.00	Apr. 1, 1993
300–499	(869–017–00100–0)	23.00	Apr. 1, 1993
500–599	(869–019–00101–8)	6.00	[4] Apr. 1, 1990

Title	Stock Number	Price	Revision Date
600-End	(869-019-00102-6)	8.00	Apr. 1, 1993
27 Parts:			
1-199	(869-019-00103-4)	37.00	Apr. 1, 1993
200-End	(869-019-00104-2)	11.00	[5] Apr. 1, 1991
28 Parts:			
1-42	(869-019-00105-1)	27.00	July 1, 1993
43-end	(869-019-00106-9)	21.00	July 1, 1993
29 Parts:			
0-99	(869-019-00107-7)	21.00	July 1, 1993
100-499	(869-019-00108-5)	9.50	July 1, 1993
500-899	(869-019-00109-3)	36.00	July 1, 1993
900-1899	(869-019-00110-7)	17.00	July 1, 1993
1900-1910 (§§ 1901.1 to 1910.999)	(869-019-00111-5)	31.00	July 1, 1993
1910 (§§ 1910.1000 to end)	(869-017-00110-4)	16.00	July 1, 1992
1911-1925	(869-019-00113-1)	22.00	July 1, 1993
1926	(869-017-00112-1)	14.00	July 1, 1992
1927-End	(869-017-00113-9)	30.00	July 1, 1992
30 Parts:			
1-199	(869-019-00116-6)	27.00	July 1, 1993
200-699	(869-019-00117-4)	20.00	July 1, 1993
700-End	(869-019-00118-2)	27.00	July 1, 1993
31 Parts:			
0-199	(869-019-00119-1)	18.00	July 1, 1993
200-End	(869-019-00120-4)	29.00	July 1, 1993
32 Parts:			
1-39, Vol. I		15.00	[2] July 1, 1984
1-39, Vol. II		19.00	[2] July 1, 1984
1-39, Vol. III		18.00	[2] July 1, 1984
1-190	(869-019-00121-2)	30.00	July 1, 1993
191-399	(869-019-00122-1)	36.00	July 1, 1993
400-629	(869-019-00123-9)	26.00	July 1, 1993
630-699	(869-019-00124-7)	14.00	[6] July 1, 1991
700-799	(869-019-00125-5)	21.00	July 1, 1993
800-End	(869-019-00126-3)	22.00	July 1, 1993
33 Parts:			
1-124	(869-019-00127-1)	20.00	July 1, 1993
125-199	(869-019-00128-0)	25.00	July 1, 1993
200-End	(869-019-00129-8)	24.00	July 1, 1993
34 Parts:			
1-299	(869-019-00130-1)	27.00	July 1, 1993
300-399	(869-019-00131-0)	20.00	July 1, 1993
400-End	(869-019-00132-8)	37.00	July 1, 1993
35	(869-019-00133-6)	12.00	July 1, 1993
36 Parts:			
1-199	(869-019-00134-4)	16.00	July 1, 1993
200-End	(869-019-00135-2)	35.00	July 1, 1993
37	(869-019-00136-1)	20.00	July 1, 1993
38 Parts:			
0-17	(869-019-00137-9)	31.00	July 1, 1993
18-End	(869-019-00138-7)	30.00	July 1, 1993
39	(869-019-00139-5)	17.00	July 1, 1993
40 Parts:			
1-51	(869-017-00138-4)	31.00	July 1, 1992
52	(869-017-00139-2)	33.00	July 1, 1992
53-60	(869-017-00140-6)	36.00	July 1, 1992
61-80	(869-017-00141-4)	16.00	July 1, 1992
81-85	(869-017-00142-2)	17.00	July 1, 1992
86-99	(869-017-00143-1)	33.00	July 1, 1992
100-149	(869-017-00144-9)	34.00	July 1, 1992
150-189	(869-017-00145-7)	21.00	July 1, 1992
190-259	(869-017-00146-5)	16.00	July 1, 1992
260-299	(869-017-00147-3)	36.00	July 1, 1992
300-399	(869-017-00148-1)	15.00	July 1, 1992
400-424	(869-017-00149-0)	26.00	July 1, 1992
425-699	(869-017-00150-3)	26.00	July 1, 1992
700-789	(869-017-00151-1)	23.00	July 1, 1992
790-End	(869-017-00152-0)	25.00	July 1, 1992

Title	Stock Number	Price	Revision Date
41 Chapters:			
1, 1-1 to 1-10		13.00	[3] July 1, 1984
1, 1-11 to Appendix, 2 (2 Reserved)		13.00	[3] July 1, 1984
3-6		14.00	[3] July 1, 1984
7		6.00	[3] July 1, 1984
8		4.50	[3] July 1, 1984
9		13.00	[3] July 1, 1984
10-17		9.50	[3] July 1, 1984
18, Vol. I, Parts 1-5		13.00	[3] July 1, 1984
18, Vol. II, Parts 6-19		13.00	[3] July 1, 1984
18, Vol. III, Parts 20-52		13.00	[3] July 1, 1984
19-100		13.00	[3] July 1, 1984
1-100	(869-019-00156-5)	10.00	July 1, 1993
101	(869-019-00157-3)	30.00	July 1, 1993
102-200	(869-019-00158-1)	11.00	[6] July 1, 1991
201-End	(869-019-00159-0)	12.00	July 1, 1993
42 Parts:			
1-399	(869-017-00157-1)	23.00	Oct. 1, 1992
400-429	(869-017-00158-9)	23.00	Oct. 1, 1992
430-End	(869-017-00159-7)	31.00	Oct. 1, 1992
43 Parts:			
1-999	(869-017-00160-1)	22.00	Oct. 1, 1992
1000-3999	(869-017-00161-9)	30.00	Oct. 1, 1992
4000-End	(869-017-00162-7)	13.00	Oct. 1, 1992
44	(869-017-00163-5)	26.00	Oct. 1, 1992
45 Parts:			
1-199	(869-017-00164-3)	20.00	Oct. 1, 1992
200-499	(869-017-00165-1)	14.00	Oct. 1, 1992
500-1199	(869-017-00166-0)	30.00	Oct. 1, 1992
1200-End	(869-017-00167-8)	20.00	Oct. 1, 1992
46 Parts:			
1-40	(869-017-00168-6)	17.00	Oct. 1, 1992
41-69	(869-017-00169-4)	16.00	Oct. 1, 1992
70-89	(869-017-00170-8)	8.00	Oct. 1, 1992
90-139	(869-017-00171-6)	14.00	Oct. 1, 1992
140-155	(869-017-00172-4)	12.00	Oct. 1, 1992
156-165	(869-017-00173-2)	14.00	[7] Oct. 1, 1991
166-199	(869-017-00174-1)	17.00	Oct. 1, 1992
200-499	(869-017-00175-9)	22.00	Oct. 1, 1992
500-End	(869-017-00176-7)	14.00	Oct. 1, 1992
47 Parts:			
0-19	(869-017-00177-5)	22.00	Oct. 1, 1992
20-39	(869-017-00178-3)	22.00	Oct. 1, 1992
40-69	(869-017-00179-1)	12.00	Oct. 1, 1992
70-79	(869-017-00180-5)	21.00	Oct. 1, 1992
80-End	(869-017-00181-3)	24.00	Oct. 1, 1992
48 Chapters:			
1 (Parts 1-51)	(869-017-00182-1)	34.00	Oct. 1, 1992
1 (Parts 52-99)	(869-017-00183-0)	22.00	Oct. 1, 1992
2 (Parts 201-251)	(869-017-00184-8)	15.00	Oct. 1, 1992
2 (Parts 252-299)	(869-017-00185-6)	12.00	Oct. 1, 1992
3-6	(869-017-00186-4)	22.00	Oct. 1, 1992
7-14	(869-017-00187-2)	30.00	Oct. 1, 1992
15-28	(869-017-00188-1)	26.00	Oct. 1, 1992
29-End	(869-017-00189-9)	16.00	Oct. 1, 1992
49 Parts:			
1-99	(869-017-00190-2)	22.00	Oct. 1, 1992
100-177	(869-017-00191-1)	27.00	Oct. 1, 1992
178-199	(869-017-00192-9)	19.00	Oct. 1, 1992
200-399	(869-017-00193-7)	27.00	Oct. 1, 1992
400-999	(869-017-00194-5)	31.00	Oct. 1, 1992
1000-1199	(869-017-00195-3)	19.00	Oct. 1, 1992
1200-End	(869-017-00196-1)	21.00	Oct. 1, 1992
50 Parts:			
1-199	(869-017-00197-0)	23.00	Oct. 1, 1992
200-599	(869-017-00198-8)	20.00	Oct. 1, 1992
600-End	(869-017-00199-6)	20.00	Oct. 1, 1992
CFR Index and Findings Aids	(869-019-00053-4)	36.00	Jan. 1, 1993
Complete 1993 CFR set		775.00	1993

Title	Stock Number	Price	Revision Date
Microfiche CFR Edition:			
Complete set (one-time mailing)		188.00	1990
Complete set (one-time mailing)		188.00	1991
Complete set (one-time mailing)		188.00	1992
Subscription (mailed as issued)		223.00	1993
Individual copies		2.00	1993

[1] Because Title 3 is an annual compilation, this volume and all previous volumes should be retained as a permanent reference source.

[2] The July 1, 1985 edition of 32 CFR Parts 1–189 contains a note only for Parts 1–39 inclusive. For the full text of the Defense Acquisition Regulations in Parts 1–39, consult the three CFR volumes issued as of July 1, 1984, containing those parts.

[3] The July 1, 1985 edition of 41 CFR Chapters 1–100 contains a note only for Chapters 1 to 49 inclusive. For the full text of procurement regulations in Chapters 1 to 49, consult the eleven CFR volumes issued as of July 1, 1984 containing those chapters.

[4] No amendments to this volume were promulgated during the period Apr. 1, 1990 to Mar. 31, 1993. The CFR volume issued April 1, 1990, should be retained.

[5] No amendments to this volume were promulgated during the period Apr. 1, 1991 to Mar. 31, 1993. The CFR volume issued April 1, 1991, should be retained.

[6] No amendments to this volume were promulgated during the period July 1, 1991 to June 30, 1993. The CFR volume issued July 1, 1991, should be retained.

[7] No amendments to this volume were promulgated during the period October 1, 1991 to September 30, 1992. The CFR volume issued October 1, 1991, should be retained.



Printed on recycled paper