IN THE UNITED STATES DISTRICT COURT
FOR THE DISTRICT OF NEBRASKA

PHIL-INSUL CORP., d/b/a INTEGRASPEC, **Plaintiff,** **vs.** **REWARD WALL SYSTEMS, INC., BUILDBLOCK BUILDING SYSTEMS, LLC, NUDURA CORPORATION, POLYFORM, A.G.P., INC., and AMVIC CORPORATION,** **Defendants.**	**8:12CV91** **FINDINGS AND RECOMMENDATION**

This matter comes before the court on the defendants Polyform, A.G.P., Inc. and Nudura Corporation's (collectively Polyform) Request for Determination of Motion for Sanctions Pursuant to Federal Rule of Civil Procedure 11 (Filing No. 236).[1] Polyform filed a brief (Filing No. 237) in support of the motion. Phil-Insul Corp., doing business as IntegraSpec (IntegraSpec) filed a brief (Filing No. 239), with attachments, and an index of evidence (Filing Nos. 240-241) in opposition to the motion. Polyform filed a brief (Filing No. 242), with an attached appendix, in reply.

BACKGROUND

IntegraSpec commenced this action on February 2, 2011, against Reward Wall Systems, Inc. (Reward Wall), BuildBlock Building Systems, LLC (BuildBlock), Polyform, and Amvic Corporation (Amvic), alleging infringement of U.S. Patent No. 5,428,933 ('933 Patent). **See** Filing No. 1. The '933 Patent relates to construction of concrete building walls using Insulating Concrete Forms (ICFs), which are made of expanded polystyrene. ***Id.*** ¶ 10. The ICFs are generally twelve by eighteen inches high and four feet long, comprising two panels that are held apart by ties or webs. ***Id.*** The form, also known as a block, can be fitted together with other blocks allowing the stack to be filled

[11] Polyform's request seeks a determination of Polyform's October 26, 2011, Motion for Sanctions Pursuant to Rule 11 (Filing No. 72), with attachments. Integra-Spec filed a brief (Filing No. 76), with attached exhibits, in opposition to the motion. Polyform filed a brief (Filing No. 80) in reply.

AUTHENTICATED U.S. GOVERNMENT INFORMATION GPO

with concrete. ***Id.*** The blocks become a permanent component of the building. ***Id.*** ¶ 11.

In October 1993, IntegraSpec designed an ICF allowing simplified interconnection of the blocks, which are "reversible," "universal," and "bi-directional and reversible," meaning the blocks may be connected regardless of how they are rotated horizontally or vertically. ***Id.*** ¶ 12. The '933 Patent was issued on July 4, 1995, on an application filed on February 14, 1994, by the President of Phil-Insul Corp., Michel Philippe. ***Id.*** ¶ 13. On April 16, 1999, the '933 Patent was assigned to IntegraSpec. ***Id.*** IntegraSpec filed a Request for Reexamination on October 31, 2002, based on previously uncited prior art, U.S. Patent No. 5,123,222 (the Guarriello patent). ***Id.*** ¶ 15. On September 21, 2010, the United States Patent and Trademark Office (PTO) issued a reexamination certificate. ***Id.*** ¶ 16.

Claim 1 of the '933 Patent states:[2]

> In **[**an**]** *a bi-directional and reversible* insulating construction member having *substantially planar ends and* top and bottom edges and interconnecting means *on said* top and on said bottom edges, the improvement wherein *each* said *top* interconnecting means **[**comprise**]** *and each said bottom interconnecting means has a pattern,* <u>*each pattern comprising* at least two *longitudinally extending* rows of alternating, *continuous, immediately adjacent* projections and recesses</u>, *extending continuously along the entire length of said top and bottom edges, the end projection in one row flush with at least a portion of one of said end planes, within each said pattern each of* said projections and recesses *in each one of said at least two rows within said pattern* being of substantially the same dimension, <u>wherein *within each said pattern* said recess of one row is adjacent said projection of the other row</u>, and wherein said interconnecting means *patterns* on said top and bottom edges are *the same and are* offset arranged such that said recess of one row *in said pattern* on said top edge is opposed to said projection of an opposite row **[**of**]** *in said pattern on* said bottom edge; whereby said insulating construction member can be interconnected with a like member in a bi-directional **[**or**]** *and* reversible manner.

[2] The court uses the same notations as the PTO such that words added during the reexamination are in italics and deleted words are in bold brackets. The underlined portions are the limitations relevant to the present motions.

See Filing No. 92-2 Reexamination Certificate p. 2.

This figure of the block form appears in the '933 Patent.

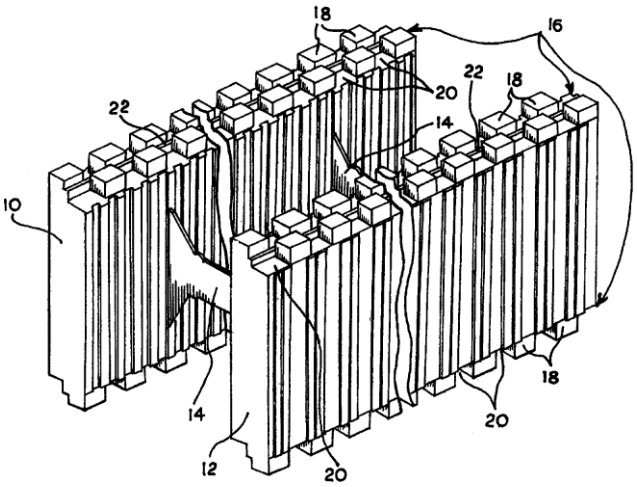

Id. at 1 (depicting two two-row panels connected in a block form).

Claim 2 of the '933 Patent states:

> An insulating construction member according to claim 1, wherein said member is an insulating construction block *comprising two panels, each of said panels having a pattern on the top and bottom edges, each of said patterns on each of said panels comprising* <u>*at least one*</u> *longitudinally extending row of alternating, continuous, immediately adjacent projections and recesses and each of said projections and each of said recesses within each said pattern in said at least one row being of substantially the same dimension*.

Id.

In 1995, IntegraSpec met with the President of Polyform, Jean-Louis Beliveau, to discuss Polyform's manufacture of the '933 patented form and disclosed the form's bi-directional and reversible capability. **See** Filing No. 1 - Complaint ¶ 30. In 1998, Polyform began molding the '933 patented form on a contract basis for IntegraSpec. ***Id.*** IntegraSpec alleges Polyform has, since 2001, manufactured and sold the Nudura ICF that copies features of the '933 patented form and infringes Claim 2 of the '933 Patent. ***Id.*** ¶ 30. Polyform's accused Nudura ICF exists in several different configurations or models, each model has a panel with a single row of alternating projections and recesses on the top and bottom edges, a one-row per panel form. **See** Filing No. 171 - Ex. 2 Snider Aff.

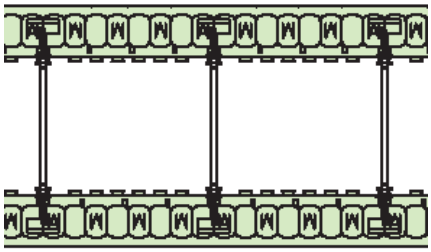

See Filing No. 171 Ex. 2(A) Nudura's Instruction Manual p. 125 (partial depiction of Polyform's accused Nudura ICF standard form product, two one-row panels connected in a block form).

On July 12, 2012, the court entered an order construing three claim terms for Claim 1 of the '933 Patent: (1) "adjacent"; (2) "substantially the same dimension"; and (3) "substantially planar ends." **See** Filing No. 168. The court construed "adjacent" to mean "next to . . . on the same panel or sidewall"; "substantially the same dimension" to mean "have the same measurable length, breadth, area and volume, with only minor variations in dimension of up to about 10%"; and "substantially planar ends" to mean "substantially flat ends." ***Id.***

On November 26, 2012, the court entered an order granting Polyform's motion for summary judgment, dismissing all claims of infringement asserted by IntegraSpec against Polyform. **See** Filing No. 215. The court also granted partial summary judgment in favor of Reward Wall and Amvic. ***Id.*** The court characterized the issue as whether the accused ICFs contained the "adjacent" limitation in Claim 1, noting Claim 2 is dependent on Claim 1, which is an independent claim. ***Id.*** at 9. The adjacent limitation, after claim construction, means "wherein within each said pattern said recess of one row is next to said projection of the other row on the same panel or sidewall." ***Id.*** n.8; Filing No. 168 - Claim Construction Order p. 30. The court determined the accused ICFs do not literally infringe the '933 Patent because Claim 1 excludes one-row panel forms. **See** Filing No. 215 - Summary Judgment Order p. 11. Similarly, the court determined the accused ICFs do not infringe the '933 Patent under the doctrine of equivalents. ***Id.*** at 19. Specifically, the court held, "prosecution history estoppel precludes an ICF with one row of projections and recesses on a panel or sidewall . . . from infringing the '933 Patent under the doctrine of equivalents." ***Id.*** at 17-18. The court also held, "the accused Nudura ICFs . . . are within the scope of the surrender

resulting from the amendment narrowing the scope of Claim 1, and do not infringe the '933 Patent under the doctrine of equivalents." ***Id.*** at 18.

After the court resolved Polyform's motion for summary judgment, Polyform filed the instant motion seeking a determination of sanctions. **See** Filing No. 236. Polyform seeks Rule 11 sanctions based on IntegraSpec's "continued assertions of infringement against a single-row panel ICF design." **See** Filing No. 80 - Reply p. 1. Polyform argues IntegraSpec's pursuit of such infringement claims is objectively unreasonable and based on objectively baseless claim construction. **See** Filing No. 237 - Brief p. 1-2. Polyform contends that, during prosecution of the patent, IntegraSpec expressly made the amendment limiting the patent to "at least two rows" of projections and recesses that were "adjacent" for the purpose of avoiding single-row configurations known in the art. ***Id.*** at 1. Thus, Polyform argues, IntegraSpec's voluntary amendment foreclosed IntegraSpec from asserting infringement claims on a single-row configuration ICF, such as the accused Nudura ICF. ***Id.***

Prior to filing the Motion for Sanctions, on October 1, 2011, Polyform served IntegraSpec with a letter attaching the proposed motion for sanctions. **See** Filing No. 72 Ex. D - Correspondence. Nevertheless, IntegraSpec declined to dismiss the action and Polyform filed the Motion for Sanctions on October 26, 2011. **See** Filing No. 72 - Motion. Without ruling on the Motion for Sanctions, the District Court for the Eastern District of Texas transferred the case to the District of Nebraska on March 6, 2012. **See** Filing Nos. 106 and 114. After this court's resolution of Polyform's Motion for Summary Judgment (Filing No. 169), the parties again conferred about the Motion for Sanctions. **See** Filing No. 237 - Brief p. 3. During a December 21, 2012, telephone conference, the parties discussed the matter with the court, who scheduled supplemental briefing. **See** Filing No. 235. The Motion for Sanctions is now fully briefed and ready for decision.

ANALYSIS

Polyform seeks sanctions against IntegraSpec pursuant to Rule 11. Under Rule 11, by presenting a pleading to the court, an attorney certifies,

> to the best of the person's knowledge, information, and belief, formed after an inquiry reasonable under the circumstances:

. . .

> (2) the claims, defenses, and other legal contentions are warranted by existing law or by a nonfrivolous argument for extending, modifying, or reversing existing law or for establishing new law; [and]
>
> (3) the factual contentions have evidentiary support or, if specifically so identified, will likely have evidentiary support after a reasonable opportunity for further investigation or discovery . . .

Fed. R. Civ. P. 11(b).

In the context of accused patent infringement, the court interprets "Rule 11 to require, at a minimum, that an attorney interpret the asserted patent claims and compare the accused device with those claims before filing a claim alleging infringement." ***Q-Pharma, Inc. v. Andrew Jergens Co.***, 360 F.3d 1295, 1300-01 (Fed. Cir. 2004). Further, the attorney must "conclude that there is a reasonable basis for a finding of infringement of at least one claim of [the] patent. . . ." ***View Eng'g, Inc. v. Robotic Vision Sys., Inc.***, 208 F.3d 981, 986 (Fed. Cir. 2000); **see *Norsyn, Inc. v. Desai***, 351 F.3d 825, 831 (8th Cir. 2003) (noting an objective reasonableness standard applies in determining whether conduct violates Rule 11's requirements). "To satisfy [the objective reasonableness] requirement, there must be 'some basis in law' to support each legal argument in the complaint. A legal argument is unjustified if a reasonable attorney would recognize it as frivolous." ***Antonious v. Spalding & Evenflo Cos.***, 275 F.3d 1066, 1072 (Fed. Cir. 2002) (internal citations omitted). Thus, an attorney's Rule 11 certification represents the attorney performed an independent claim analysis to "interpret the pertinent claims of the patent in issue before filing the complaint alleging patent infringement," despite a client's claim interpretation. ***Id.***

In this case, the court determined the accused Nudura ICF does not infringe the '933 Patent. **See** Filing No. 215 - Summary Judgment Order. The court's summary judgment determination does not presage the sanction analysis. "Reasonable minds can differ as to claim construction positions and losing constructions can nevertheless be nonfrivolous. But, there is a threshold below which a claim construction is 'so unreasonable that no reasonable litigant could believe it would succeed,' and thus warrants Rule 11 sanctions." ***Raylon, LLC v. Complus Data Innovations, Inc.***, 700

F.3d 1361, 1368 (Fed. Cir. 2012) (internal citation omitted); **see *MarcTec, LLC v. Johnson & Johnson***, 664 F.3d 907, 918 (Fed. Cir. 2012) (noting "it is clear that '[d]efeat of a litigation position, even on summary judgment, does not warrant an automatic finding that the suit was objectively baseless'"). The court will find a claim construction position unreasonable if it is unsupported or refuted by intrinsic evidence, such as the words of the claims themselves, the written description, and the prosecution history. ***Id.***; ***Eon-Net LP v. Flagstar Bancorp***, 653 F.3d 1314, 1320-21, 1328-29 (Fed. Cir. 2011) (noting "[t]he specification exposes the frivolity" of the plaintiff's claim construction position, which "borders on the illogical"). Additionally, a party who makes a disclaimer, narrowing the patent to overcome prior art, as evidenced by the patent's prosecution history, may not reasonably assert infringement against a product covered by the disclaimer. **See *MarcTec***, 664 F.3d at 919.

Polyform seeks Rule 11 sanctions based on IntegraSpec's "continued assertions of infringement against a single-row panel ICF design." **See** Filing No. 80 - Reply p. 1. IntegraSpec maintains the '933 Patent encompasses a single-row panel design.[3] In the alternative, IntegraSpec argues "an objective basis exists for construction of the '933 Patent that reads on a one-row ICF." **See** Filing No. 238 - Brief p. 6. IntegraSpec contends (1) there is no express or implied limitation in Claim 1 excluding one row panel coverage (***Id.*** at 3-4); (2) Polyform's pre-litigation conduct was consistent with believing the '933 Patent covered one row panel forms; and (3) the '933 Patent's prosecution history does not support estoppel.

1. Claim 1 Limitation Excluding One Row Panel

The '933 Patent's abstract describes the invention form or block as "an insulating construction member having top and bottom edges and interconnecting members on the top and bottom edges. The interconnecting members comprise alternating projections and recesses . . . arranged whereby the insulating construction member can be interconnected with a like member in a bi-directional or reversible manner." **See** Filing No. 92-2 - Reexamination Certificate p. 1 (Page ID # 866). IntegraSpec argues

[3] IntegraSpec states it intends to appeal the orders on summary judgment and claim construction. **See** Filing No. 238 - Brief p. 4, 7, 11.

Claim 1 in the '933 Patent is an independent generic claim regarding the block. **See** Filing No. 238 - Brief p. 3-4, 6-9. As such, Claim 1 describes the block as having "at least two longitudinally extending rows of alternating, continuous, immediately adjacent projections and recesses." **See** Filing No. 92-2 - Reexamination Certificate p. 2. Additionally, each block, by definition, must have two panels. ***Id.*** Claim 2. Accordingly the language stating, "at least two longitudinally extending rows," on one block reasonably means each of the two panels may have only one row of projections and recesses, rather than each panel must have two or more rows. **See** Filing No. 238 - Brief p. 3-4, 6-9. Claim 1 continues to describe a row: "in each one of said at least two rows within said pattern being of substantially the same dimension, wherein within each said pattern said recess of one row is adjacent said projection of the other row." **See** Filing No. 92-2 Reexamination Certificate p. 2. IntegraSpec argues "adjacent" does not require two offset rows on a single panel as construed by the court, but reasonably allows and actually requires, the rows in the facing panels to be offset regardless of the number of rows on each panel. **See** Filing No. 238 - Brief p. 3-5, 6-9. Such construction, as in the one-row ICF design context, allows each single row panel to be offset in relation to each other row in the block arrangement. **See** Filing No. 238 - Brief p. 3-4, 6-9. Without the offset pattern, the block would not be reversible and bi-directional for interconnection. **See** Filing No. 76 - Brief p. 8-10. The set of figures below depict non-reversible block patterns when the two rows facing each other from different panels are not offset.

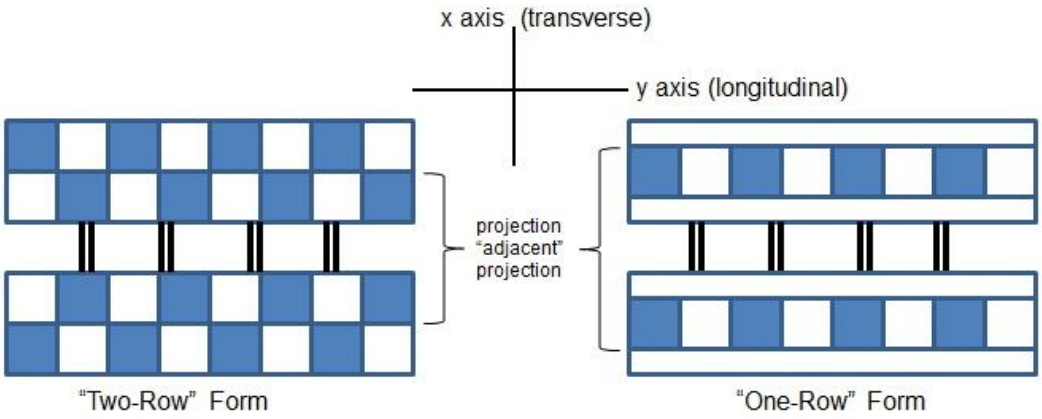

Non-Reversible and Bidirectional

See Filing No. 76 - Brief p. 9.

The set of figures below depict forms, according to IntegraSpec, which are covered by the '933 Patent and are reversible and bi-directional because the rows are offset with regard to both the rows on a single panel and across panels. ***Id.*** at 8-10. Relevant to the current discussion, these figures depict the top of the forms. The patterns on the bottom of the forms are "arranged such that said recess of one row in said pattern on said top edge is opposed to said projection of an opposite row in said pattern on said bottom edge; whereby said insulating construction member can be interconnected with a like member in a bi-directional and reversible manner." **See** Filing No. 92-2 Reexamination Certificate p. 2; **see also** figure ***id.*** at 1.

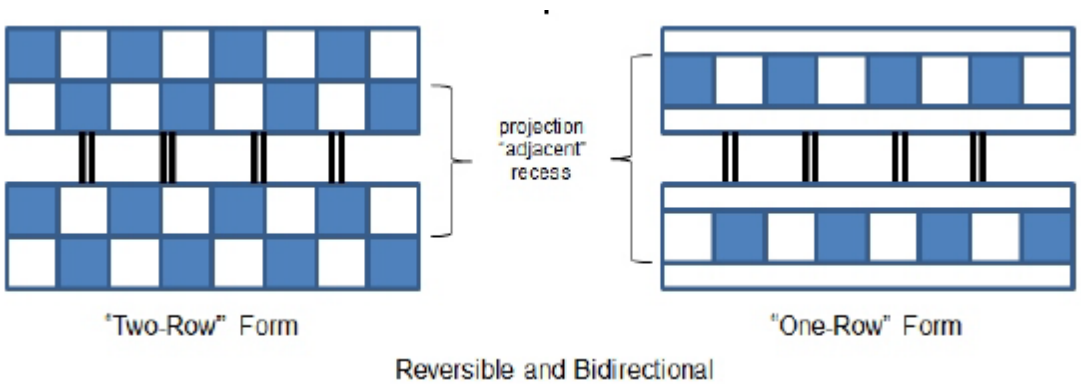

See Filing No. 76 - Brief p. 9.

Furthermore, IntegraSpec contends this construction is consistent with its interpretation of Claim 2 and Claim 3, both dependent on Claim 1. **See** Filing No. 238 - Brief p. 5, 9-11. Specifically, IntegraSpec argues the court's construction of Claim 1 limits the form to having two rows on each panel, however Claim 2, the basis of the IntegraSpec's lawsuit against Polyform, describes "an insulating construction block comprising two panels . . . each of said patterns on each of said panels comprising at least one longitudinally extending row of alternating, continuous, immediately adjacent projections and recesses." **See** Filing No. 92-2 Reexamination Certificate p. 2 (emphasis added). By contrast, Claim 3 describes "patterns comprising at least two longitudinally extending rows of alternating, continuous, immediately adjacent projections and recesses." ***Id.*** (emphasis added). Based on this language, IntegraSpec contends the court's construction leaves Claim 1 in direct conflict with Claim 2 and

renders Claim 3 obsolete. **See** Filing No. 238 - Brief p. 9-11. Additionally, IntegraSpec suggests their construction was made "with a full understanding of what the inventors actually invented and intended to envelop with the claim." ***Id.*** at 11 (**quoting *Renishaw PLC v. Marposs Societa' per Azioni***, 158 F.3d 1243, 1250 (Fed. Cir. 1998)). Accordingly, IntegraSpec argues Claim 1 provides a general description of the block while Claim 2 and Claim 3 describe a block more specifically with two panels, each panel having at least one row (Claim 2) or each panel having at least two rows (Claim 3). **See** Filing No. 238 - Brief p. 9-11.

2. Polyform's Conduct

IntegraSpec contends Polyform knew the '933 Patent covered one-row forms prior to this lawsuit because (a) Polyform began molding the patented form for IntegraSpec in 1998; (b) Polyform sought a patent license from IntegraSpec on three occasions between 2000 and 2007 for the one row form, and (c) in an unrelated lawsuit brought by Polyform against Airlite Plastics Company, a jury found in favor of Airlite who relied upon, among other things, the '933 Patent as prior art to invalidate Polyform's patent. **See** Filing No. 238 - Brief p. 3, 5-6, 21-23. Significantly, with regard to using the '933 Patent as prior art, during the February 2009 trial Beliveau admitted "[the '933 Patent] shows that there was one row. Yeah, I--I accept that." ***Id.*** at 22 (**quoting** Filing No. 238-2 - Newman Aff. Ex. 1-8 Case 8:07CV397 Trial Tr. 855 (Page ID # 5249)). Beliveau's admission came despite Polyform's previous assertion in its patent that the '933 Patent required at least two rows. ***Id.*** at 22-23. Based on evidence supporting these facts, IntegraSpec argues Polyform was aware of the '933 Patent's disclosure in the specification of a one row panel form. ***Id.*** at 23. Moreover, IntegraSpec asserts this evidence suggests IntegraSpec's continued assertions of infringement against a single-row panel ICF design were reasonable and nonfrivolous. ***Id.***

3. Prosecution History Estoppel

IntegraSpec argues the '933 Patent's reexamination prosecution history is subject to the reasonable interpretation IntegraSpec did not expressly disclaim that Claim 1 encompassed a one row panel. **See** Filing No. 238 - Brief p. 6. In the

alternative, IntegraSpec contends the court incorrectly found prosecution history estoppel based on Polyform's misrepresentation of the 1994 prosecution history. ***Id.*** at 11-12.

Prosecution history "[e]stoppel is a 'rule of patent construction' that ensures that claims are interpreted by reference to those 'that have been cancelled or rejected' . . . in light of the proceedings in the PTO during the application process." ***Festo Corp. v. Shoketsu Kinzoku Kogyo Kabushiki Co., Ltd.***, 535 U.S. 722, 733 (2002) (**quoting** ***Schriber-Schroth Co. v. Cleveland Trust Co.***, 311 U.S. 211, 220-21 (1940)). During the process, a patent examiner's rejection indicates disbelief about whether the original claim may be patented. ***Festo***, 535 U.S. at 734. A patentee may forgo the right to appeal the rejection, instead submitting an amended claim. ***Id.*** The amendment "is taken as a concession that the invention as patented does not reach as far as the original claim." ***Id.*** "In that instance the prosecution history has established that the inventor turned his attention to the subject matter in question, knew the words for both the broader and narrower claim, and affirmatively chose the latter." ***Id.*** at 734-35. Accordingly, "a narrowing amendment, whether made to avoid prior art or to comply with [the Patent Act], creates a presumption that the patentee surrendered the territory between the original claims and the amended claims." ***Glaxo Wellcome, Inc. v. Impax Labs., Inc.***, 356 F.3d 1348, 1352 (Fed. Cir. 2004) (***Festo***, 535 U.S. at 736). The patentee may rebut the presumption by showing the relevant claim limitation was tangential to the purpose of the amendment. **See *id.***

IntegraSpec argues the amendment made during the 1994 prosecution of the '933 Patent was tangential, at best, to the accused Nudura ICF, any one row panel form, or to the number of rows in any form. **See** Filing No. 238 - Brief p. 12-18. IntegraSpec contends that although the amendment was made to distinguish prior art, the patent examiner's rejection had nothing to do with the number of rows on each panel, or can be reasonably construed as such. ***Id.***

In the initial Office Action, the patent examiner rejected several claims based on prior art. ***Id.*** at 12 (**citing** Filing No. 92-3 - Ex. 3 File History p. 84 (Page ID # 953 to 958). Specifically, Claim 1, among others, were rejected "as being clearly anticipated by" the Beliveau '446 Patent and the Horobin '969 Patent. ***Id.***; Filing No. 92-3 - Ex. 3

File History p. 87 (Page ID # 956). At that time, Claim 1 did not recite any rows, Claim 4 recited one row, and Claims 6 and 7 recited two rows. **See** Filing No. 238 - Brief p. 12. Beliveau '446 showed a form with three rows of projections and recesses on each panel. ***Id.*** at 12-13. Horobin '969 showed a form with the top edge having one row and the bottom edge having two rows of projections and recesses. ***Id.*** at 13. Both forms showed an offset pattern with regard to the projections and recesses in a single row, however neither form showed the projections and recesses in an offset pattern either in separate rows or across panels. ***Id.*** In any event, IntegraSpec contends the examiner rejected Claim 1 referencing prior art showing one, two, and three rows on the same panel, therefore the number of rows could not have been the basis of the rejection. ***Id.*** at 14. Likewise, the patent examiner rejected Claim 6, which recited two rows, but stated Claim 7, which also recited two rows and the limitation "the recess of one row is adjacent to said projection of the other row," would be allowable if written in independent form. ***Id.*** at 14-15; Filing No. 92-3 - Ex. 3 File History p. 87 (Page ID # 957). While Claim 7 was cancelled as redundant, the adjacency limitation from Claim 7 was added to Claim 1. **See** Filing No. 238 - Brief p. 15. Accordingly, the adjacency limitation constituted the structural distinction between the amended Claim 1 and the prior art. ***Id.*** at 15-16. As the argument extends, the adjacency limitation, as construed by IntergraSpec not as construed by the court, recites the distinction allowing the '933 patented forms to be bidirectional and reversible. ***Id.*** at 16.

IntegraSpec's positions ultimately proved unsuccessful but were not meritless. IntegraSpec's infringement contentions were based on its claim construction. Based on the court's analysis IntegraSpec's claim construction was not frivolous. The patent examiner did not explicitly limit Claim 1 to exclude a one row panel form and the relevant prior art recited one, two, and three row panels. IntegraSpec's position about the meaning the term adjacent is objectively reasonable based on a common understanding of the term, consistent usage in other claims of the patent, and the important features of the invention. The intrinsic evidence does not compel the construction used by the court. It objectively and reasonably support's IntegraSpec's construction. Accordingly, the undersigned magistrate judge will recommend no sanctions be awarded to Polyform.

IT IS RECOMMENDED TO DISTRICT JUDGE JOSEPH F. BATAILLON that:

1. Polyform's Request for Determination of Motion for Sanctions Pursuant to Federal Rule of Civil Procedure 11 (Filing No. 236) be granted.

2. Polyform's Motion for Sanctions Pursuant to Rule 11 (Filing No. 72) be denied.

ADMONITION

Pursuant to NECivR 72.2 any objection to this Findings and Recommendation shall be filed with the Clerk of the Court within fourteen (14) days after being served with a copy of this Findings and Recommendation. Failure to timely object may constitute a waiver of any objection. The brief in support of any objection shall be filed at the time of filing such objection. Failure to file a brief in support of any objection may be deemed an abandonment of the objection.

Dated this 8th day of March, 2013.

BY THE COURT:

s/ Thomas D. Thalken
United States Magistrate Judge