IN THE UNITED STATES DISTRICT COURT
FOR THE EASTERN DISTRICT OF LOUISIANA

In re: Oil Spill by the Oil Rig "Deepwater Horizon" in the Gulf of Mexico, on April 20, 2010,	*	**MDL 2179**
	*	**SECTION J**
This Document Applies To:	*	
No. 10-2771, In re: The Complaint and Petition of Triton Asset Leasing GmbH, et al.	*	**JUDGE BARBIER**
and	*	**MAG. JUDGE SHUSHAN**
No. 10-4536, United States of America v. BP Exploration & Production, Inc., et al.	*	

FINDINGS OF FACT AND CONCLUSIONS OF LAW

PHASE ONE TRIAL

AUTHENTICATED
U.S. GOVERNMENT
INFORMATION
GPO

Pursuant to Federal Rule of Civil Procedure 52(a), the Court enters these Findings of Fact and Conclusions of Law relative to the Phase One trial. If any finding is in truth a conclusion of law, or if any conclusion stated is in truth a finding of fact, it shall be deemed so.

The Court has also issued simultaneously with these Findings of Fact and Conclusions of Law a separate order ruling on various motions pertaining to the Phase One trial.

CONTENTS

I. Introduction and Procedural History 5
II. Parties to the Phase One Trial 9
A. Defendants 9
i. The BP Entities 9
ii. The Transocean Entities 10
iii. Halliburton 10
iv. Cameron and M-I 10
B. Plaintiffs 11
C. Non-Parties to Phase One Trial 11
III. Substantive Findings of Fact 11
A. The DEEPWATER HORIZON 11
B. MC252 and the Macondo Well 13
C. Drilling the Macondo Well 15
i. Some Offshore Drilling Concepts 15
ii. Drilling Operations at Macondo 17
iii. Post-Drilling Operations: Production Casing and Temporary Abandonment 20
D. Production Casing 21
i. Long String Casing vs. Liner With Tieback 21
ii. Running the Production Casing 24
E. Overview of Cement Issues 25
F. Cement Placement 26
i. The Weatherford M45AP Float Collar 26
ii. The Attempted Conversion of the Float Collar 28
iii. The Float Collar Did Not Convert 34

iv. The Shoe Track Breached During the Attempted Float Collar Conversion 37

v. Cement Was Pumped Through the Breach in the Shoe Track and Placed Improperly; Hydrocarbons Later Entered the Well Casing Through the Breach in the Shoe Track 40

vi. The Court Is Not Persuaded by BP's Theories Regarding Float Collar Conversion, Cement Placement, and Flow Path 43

vii. Cement Bond Log 46

viii. M57B Sand 50

G. Cement Composition 51

i. Cementing Responsibilities 51

ii. The Cement Design for the Macondo Well 51

iii. Parties' Arguments Regarding Cement Composition 53

iv. The Cement Was Unstable, but Instability Did Not Cause the Blowout 55

H. Pressure Integrity Testing 59

i. The Positive Pressure Test 59

ii. The Negative Pressure Test 60

iii. Responsibility for Misinterpretation of the Negative Pressure Test 65

iv. The "Bladder Effect" 73

v. LCM Spacer 75

I. Well Control During Final Displacement and the Blowout 77

i. Well Control Responsibilities 77

ii. 8:00 p.m.: Final Displacement Commences 78

iii. 9:01-9:08: First Anomaly 80

iv. 9:08-9:14: The Sheen Test and the Second Anomaly 81

v. 9:17: Pressure Spike 82

vi. 9:31-9:38: The Transocean Drill Crew Fails to Timely Shut In the Well 83

vii. Actions by the Transocean Drill Crew Between 9:31 and 9:49 p.m., when the First Explosion Occurred. 85

viii. Diversion to the Mud-Gas Separator 86

ix. Simultaneous Operations Hindered Well Monitoring 89

J. The BOP's Automatic Functions: AMF and Autoshear 90

i. Configuration of the HORIZON's BOP 90

ii. AMF and Autoshear 94

iii. Improper Maintenance Prevented AMF from Closing the BSRs on April 20, 2010..... 95

iv. The BSRs Would Have Sealed the Well if AMF Had Functioned 97

v. Responsibility for BOP Maintenance 98

vi. The BSRs Partially Closed, but Did Not Seal, on April 22, 2010, When the Autoshear Plunger Was Cut 100
vii. The Configuration of the BOP Was Not Unreasonable or Not Causal 101
K. Actions by the Marine Crew 102
i. EDS and the Master's Overriding Authority 102
ii. Other Actions by the HORIZON's Crew Following the Explosions 107
L. Alarm Systems and Rig Maintenance 110
i. General Alarm, Emergency Shut Down, and Other Alarms 110
ii. Rig Maintenance 110
M. Process Safety 111
IV. Conclusions of Fact and Law 112
A. Jurisdiction 112
B. Liability Under the Clean Water Act 113
i. Legal Standard Re: "Gross Negligence" and "Willful Misconduct" 114
ii. Findings Re: "Gross Negligence" or "Willful Misconduct" (Single Act) 121
iii. Findings Re: "Gross Negligence" or "Willful Misconduct" (Multiple Negligent Acts) 129
iv. Attribution 130
v. Causation 133
vi. Additional Bases for BPXP's Clean Water Act Liability 134
C. Liability Under General Maritime Law 135
i. Summary 135
ii. Fault Allocation and Degree 136
iii. Liability for Punitive Damages: Fifth Circuit Rule 140
iv. Liability for Punitive Damages: Other Circuits 142
v. BP p.l.c. and Transocean Ltd. 143
vi. Triton Asset Leasing GmbH 143
D. Contractual Releases and Indemnities 144
E. Limitation of Liability 145
F. Liability Under the Oil Pollution Act of 1990 147
i. BPXP and OPA's Liability Cap 147
ii. Transocean's Liability as an "Operator" of an "Outer Continental Shelf facility" 149
V. Summary 152

I. INTRODUCTION AND PROCEDURAL HISTORY

1. Figure 1 illustrates the DEEPWATER HORIZON, the HORIZON's marine riser and blowout preventer ("BOP"), and the Macondo well prior to the blowout on April 20, 2010.[1]

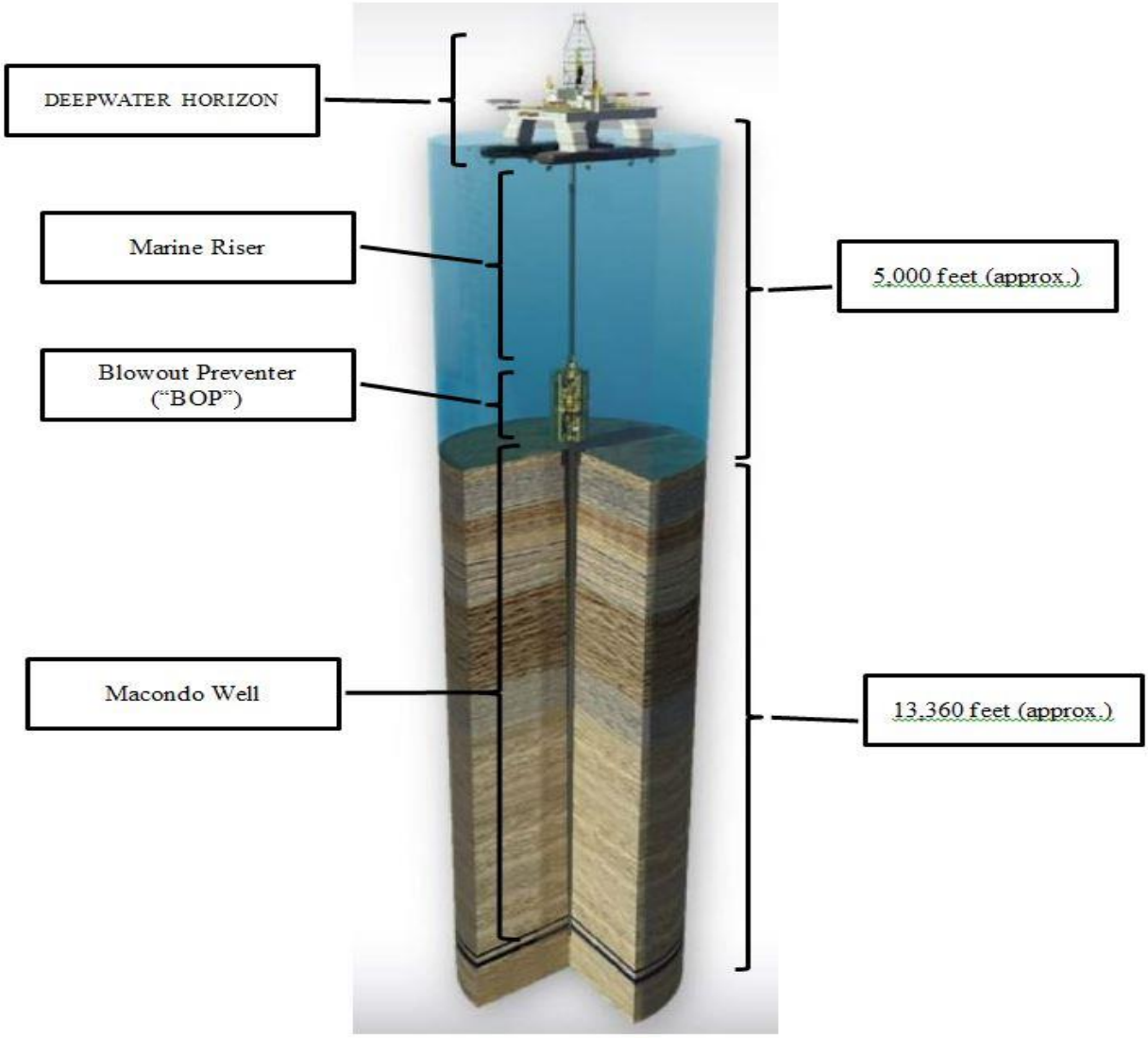

Figure 1 [2]

[1] Several figures are included with these Findings of Fact. These are provided solely as an explanatory aide and do not constitute actual findings of the Court. Many figures illustrate a design concept or an ***intended*** outcome, rather than what actually occurred. Most figures are not to scale. The figures are best viewed in color, as opposed to black and white.

[2] D6645 (adopted from Transocean's Investigation Report, TREX 4248) (labels added). Citations that begin with "D," such as "D6645" refer to a demonstrative used at trial. Citations to "TREX," such as "TREX 4248," refer to a "trial exhibit" admitted into evidence. When a TREX citation includes a pincite to a specific page, the page

2. On the evening of April 20, 2010, a blowout, explosions, and fire occurred aboard the MODU DEEPWATER HORIZON (sometimes referred to as the "HORIZON") as it was in the process of temporarily abandoning a well, known as Macondo, it had drilled on the Outer Continental Shelf off the coast of Louisiana.

3. Eleven men died tragically in the incident: Jason Anderson, Dewey Revette, Aaron (Dale) Burkeen, Donald Clark, Stephen Curtis, Roy (Wyatt) Kemp, Karl Kleppinger, Shane Roshto, Adam Weise, Keith Blair Manuel, and Gordon Jones. At least seventeen others were injured. The survivors evacuated to the M/V DAMON BANKSTON, a supply vessel that was near the HORIZON when the explosions occurred.

4. The explosions and/or fire should have triggered the automatic function on the HORIZON's BOP, but that function either failed to activate the BOP or the BOP otherwise failed to shut in the well. Subsequent attempts to operate the BOP with remotely operated vehicles also failed to stop the blowout.

5. Several vessels responded to the distress calls and attempted to extinguish the fire with their monitors (water canon). Despite these efforts, the HORIZON burned continuously until mid-morning on April 22, when it capsized and sank into the Gulf of Mexico.

6. As the rig descended, the marine riser—the approximately 5,000 feet of pipe that connected the rig to the BOP[3]—collapsed and broke. Millions of gallons of oil discharged into the Gulf of Mexico over the next 87 days.

---

number is the "pdf" page number (i.e., page "1" is the very first page of the exhibit), which may be different from the page number appearing on the exhibit.

[3] *See* Figure 1 *supra*.

7. After multiple unsuccessful attempts, the well was finally capped and the discharge halted on July 15, 2010. In mid-September, a relief well intercepted the Macondo well and permanently sealed it with cement.

8. It was not long after the initial explosions that the first lawsuits were filed. Since that time, approximately 3,000 cases, with over 100,000 named claimants, have been filed in federal and state courts across the nation. These suits asserted a wide array of claims including wrongful death and personal injury due to the explosion and fire, post-incident personal injury resulting from exposure to oil and/or the chemical dispersants used during the oil spill response, damage to property or natural resources, and economic losses resulting from the oil spill.

9. On August 10, 2010, the United States Judicial Panel on Multidistrict Litigation transferred most[4] federal cases to this Court as Multidistrict Litigation no. 2179 ("MDL 2179").[5]

10. This Court adopted a phased trial proceeding that ultimately focused on two cases within MDL 2179: *In re Triton Asset Leasing GmbH, et al.* (Civ. A. No. 10-2771) and *United States v. BP Exploration & Production Inc., et al*. (Civ. A. No. 10-4536).[6] Both cases are before the Court for all purposes,[7] and both are proceedings in admiralty under 28 U.S.C. § 1333(1) and Federal Rule of Civil Procedure 9(h). Consequently, these cases may be tried by this Court without a jury.

11. *In re Triton Asset Leasing GmbH* is a limitation action filed by several of the Transocean entities pursuant to 46 U.S.C. § 30501, *et seq.*, commonly referred to as the Shipowner's Limitation of Liability Act. Thousands of claims were filed in that action.

---

[4] Shareholder derivative suits and other securities-related cases were placed into a separate MDL, number 2185, pending before the Southern District of Texas. *BP p.l.c. Sec. Litig.*, 734 F. Supp. 2d 1376 (J.P.M.L. 2010).

[5] *In re: Oil Spill by the Oil Rig "Deepwater Horizon" in the Gulf of Mexico, on April 20, 2010*, 731 F. Supp. 2d 1352 (J.P.M.L. 2010).

[6] *See* Case Management Orders 3 and 4, Rec. Docs. 4083, 6592.

[7] This is in contrast to cases that were transferred to this Court pursuant to the MDL statute, 28 U.S.C. § 1407, which are here for pretrial purposes only.

Pursuant to Federal Rule of Civil Procedure 14(c), the Transocean entities impleaded other parties who it alleged were partially or wholly liable. The Rule 14(c) parties then counterclaimed against Transocean and crossclaimed against one another. Although Transocean is technically the "plaintiff" or "petitioner" in a limitation action, for simplicity the Court will sometimes refer to it and the impleaded 14(c) parties as "Defendants." Likewise, claimants in the limitation proceeding who typically would occupy the position of plaintiffs will be referred to as "Plaintiffs."

12. *United States v. BP Exploration & Production Inc.* concerns the United States' claims for civil penalties under Section 311(b) of the Clean Water Act, 33 U.S.C. § 1321(b), and for a declaratory judgment of liability under the Oil Pollution Act of 1990, 33 U.S.C. 2701, *et seq.*, and the Declaratory Judgment Act, 28 U.S.C. § 2201. The United States sued BP Exploration and Production, Inc., Anadarko Exploration & Production LP, Anadarko Petroleum Corporation, MOEX Offshore 2007 LLC, various Transocean entities, and QBE Underwriting Ltd., Lloyd's Syndicate 1036.[8] Other parties were added as third-party defendants.

13. The "Phase One" trial commenced on February 25, 2013, and concluded on April 17, 2013.[9] Known as the "Incident Phase," it addressed fault determinations relating to the loss of well control, the ensuing explosion and fire, the sinking of the DEEPWATER HORIZON, and the initiation of the release of oil from the well. Phase One also considered issues related to Transocean's limitation defense, as well as the various cross-, counter-, and third-party claims between the several defendants.

[8] QBE Underwriting Ltd., Lloyd's Syndicate 1036 allegedly provided evidence of financial responsibility and certain guarantees pertaining to one or more of the Transocean entities.

[9] The Phase One trial was originally scheduled to begin in 2012, but was delayed for a year after BP and the Plaintiffs Steering Committee ("PSC") reached agreement on two class settlements.

14. "Phase Two" commenced on September 30, 2013, and concluded on October 18, 2013. This phase was divided into two segments: "Source Control" and "Quantification." The former concerned issues pertaining to the conduct or omissions relative to stopping the release of hydrocarbons. The latter segment pertained to the amount of oil actually released into the Gulf of Mexico, which is an important factor for determining the amount of civil penalties under the CWA.

15. After each phase the parties submitted memoranda, responses, and proposed findings. Phase One post-trial memoranda and proposed findings were submitted on June 21, 2013; response memoranda were submitted on July 12, 2013. Phase Two post-trial memoranda and proposed findings were submitted on December 20, 2013; response memoranda were submitted by January 27, 2014.

II. PARTIES TO THE PHASE ONE TRIAL

A. Defendants

i. The BP Entities

16. BP Exploration & Production, Inc. was the primary leaseholder of the Macondo site. BP Exploration & Production, Inc. is also the only BP entity that was sued by the United States in *United States v. BP Exploration & Production Inc., et al.*

17. BP America Production Company contracted with Transocean Holdings LLC to drill the Macondo well.

18. BP Exploration & Production, Inc. and BP America Production Company are direct or indirect wholly-owned subsidiaries of BP p.l.c.

19. BP Exploration & Production Inc. and BP America Production Company are sometimes collectively referred to as "BP."

ii. The Transocean Entities

20. Triton Asset Leasing GmbH was the owner of the DEEPWATER HORIZON.

21. Triton Asset Leasing GmbH bareboat chartered the HORIZON to Transocean Holdings LLC. Transocean Holdings LLC was also the contracting party with BP for the Macondo well.

22. Transocean Deepwater Inc. employed the crew of the HORIZON.

23. Transocean Offshore Deepwater Drilling Inc. employed the HORIZON's supervisory and managerial employees onshore.

24. Triton Asset Leasing GmbH, Transocean Holdings LLC, Transocean Deepwater Inc., and Transocean Offshore Deepwater Drilling Inc. are all subsidiaries of Transocean Ltd.

25. Triton Asset Leasing GmbH, Transocean Holdings LLC, Transocean Deepwater Inc., and Transocean Offshore Deepwater Drilling Inc. are sometimes collectively referred to as "Transocean."

iii. Halliburton

26. Halliburton Energy Services, Inc. ("Halliburton") was contracted by BP to provide cementing services and mudlogging services, the latter of which was performed by Halliburton's Sperry division.

iv. Cameron and M-I

27. Cameron International Corporation, f/k/a Cooper Cameron Corporation ("Cameron"), manufactured the HORIZON's blowout preventer.

28. During the Phase One trial, Cameron moved for judgment on partial findings pursuant to Federal Rule of Civil Procedure 52(c). The Court orally granted this motion and

dismissed all claims against Cameron, including any counter-claims, cross-claims, and third-party claims.[10]

29. M-I, LLC contracted with BP to provide goods and attendant services related to drilling fluids at Macondo.

30. M-I, LLC also moved for judgment on partial findings during the Phase One trial, which the Court granted.[11]

B. Plaintiffs

31. The Phase One plaintiffs include the United States, the States of Louisiana and Alabama, and numerous private individuals, businesses, or other entities who have filed claims in Transocean's limitation action, Civ. A. No. 10-2771.

C. Non-Parties to Phase One Trial

32. Due to various settlements, rulings, and/or stipulations, BP's co-lessees—the MOEX entities and the Anadarko entities—were not parties to the Phase One trial. Furthermore, prior to the Phase One trial the Court granted motions for summary judgment by defendants Weatherford U.S., L.P., Weatherford International, Inc., and Dril-Quip, Inc., and dismissed all claims against them.

III. SUBSTANTIVE FINDINGS OF FACT

A. The DEEPWATER HORIZON

33. On December 9, 1998, predecessors to Transocean Holdings, LLC and BP America Production Company entered into a contract for the construction, use, and operation of the DEEPWATER HORZION.

[10] Transcript at 7099-7102; Minute Entries, Rec. Docs. 8969, 9136.
[11] Transcript at 5051-59; Minute Entry, Rec. Doc. 8969.

34. The HORIZON entered service in 2001. It was capable of drilling up to 35,000 feet deep at a water depth of 10,000 feet. Prior to Macondo, the HORIZON had successfully drilled approximately 50 wells. All of these were in the Gulf of Mexico, and all except one were for BP.

35. The HORIZON was 396 feet in length and 256 feet in breadth. It floated on two massive pontoons. Four large columns rose from the pontoon and supported the main deck, drill floor, derrick, bridge, engines, living quarters, helipad, cranes, etc.

36. Figure 2 depicts the DEEPWATER HORIZON prior to April 20, 2010.

Figure 2 [12]

[12] TREX 4248 at 4 (Transocean's Investigation Report).

37. The HORIZON was a mobile offshore drilling unit or "MODU," which is a general category of drilling vessel. The HORIZON was a self-propelled, dynamically-positioned, semi-submersible MODU.

38. "Semi-submersible" refers to the fact that the HORIZON would partially submerge itself during drilling operations, which increased the rig's stability.

39. "Self-propelled" refers to the fact that the HORIZON used its eight large thrusters to move from place to place.[13]

40. "Dynamically-positioned" refers to the fact that the HORIZON also used its thrusters to keep itself relatively stationary over a well, as opposed to relying on anchors or some other attachment to the seafloor. Thus, one or more of the HORIZON's thrusters were active nearly all of the time, even when the rig was not making actual headway.

41. The HORIZON had a master, chief mate, dynamic positioning operators, bosuns, able-bodied seamen, and ordinary seamen. These Transocean employees were commonly referred to as the "marine crew" and were responsible for, among other things, the MODU's navigation function and keeping the MODU "on station" with the dynamic positioning system. There were other Transocean "crews" aboard the HORIZON. Notably, the "drill crew" was primarily responsible for the MODU's drilling function and consisted of the Offshore Installation Manager, toolpushers, drillers, roustabouts, and others.

B. MC252 and the Macondo Well

42. On March 19, 2008, BP Exploration and Production Inc. acquired a lease from the United States of 5,760 acres of property on the Outer Continental Shelf comprising Mississippi Canyon Block 252 ("MC252").

[13] In fact, the HORIZON propelled itself across the Atlantic Ocean during its maiden voyage from South Korea to the Gulf of Mexico.

43. BP was the "operator" of the Macondo well under MMS[14] regulations, meaning it was "the person the lessee(s) designates as having control or management of operations on the leased areas or a portion thereof."[15] As operator and primary leaseholder, BP's responsibilities included assessing the geology of the site, engineering the well design, obtaining regulatory approvals for well operations, retaining and overseeing the project's contractors, and working on various aspects of the well and drilling operations.

44. BP America Production Company contracted with Transocean Holdings, LLC to drill the Macondo well in MC252.

45. The Macondo well was drilled in approximately 5,000 feet of water, considered "deepwater" in the current oil and gas industry. It was located approximately 50 miles south of the Louisiana coast. The initial well plan called for a total depth of 20,200 feet, measured from the deck of the MODU.[16]

46. The DEEPWATER HORIZON was not initially chosen to drill the Macondo well. Instead, the MARIANAS, another Transocean-owned semi-submersible, spudded the well on October 6, 2009.

47. The MARINAS left the Macondo well in November 2009 after it was damaged by Hurricane Ida. At that point the MARIANAS had drilled the well to approximately 9,000 feet deep.

---

[14] "MMS" refers to the Minerals Management Service, which became the Bureau of Ocean Energy Management, Regulation and Enforcement after the Macondo/DEEPWATER HORIZON event. That agency was later replaced by the Bureau of Ocean Energy Management and the Bureau of Safety and Environmental Enforcement.

[15] 30 C.F.R. § 250.105. All citations to regulations or statutes are to the versions that existed on April 20, 2010, unless otherwise noted.

[16] Unless otherwise noted, references to well depth are measured from the deck of the MODU and includes the depth of the water. Therefore, if the Macondo well had been drilled to its planned total depth of 20,200 feet, the bottom of the well would have been approximately 15,200 feet below the seafloor.

48. The DEEPWATER HORIZON was chosen to resume drilling the Macondo well. It left the Kodiak well—another BP well—and arrived onsite on January 31, 2010. A few days later the HORIZON latched its BOP onto the wellhead. Drilling resumed on February 11, 2010.

C. Drilling the Macondo Well

i. Some Offshore Drilling Concepts

49. In simplified terms, drilling the Macondo well involved a repeated sequence of steps: drill a certain distance, stop drilling, set "casing" to reinforce the wellbore, cement the casing in place, drill further, stop, set more casing, and so forth.

50. Casing is essentially large diameter pipe that is placed inside a drilled-out section of the well. Once properly cemented in place, casing isolates the adjacent geologic formation (i.e., the rock) from the well.

51. The top of each successive casing string was set inside the previous one. Thus, the diameter of the well decreased slightly with each new piece of casing. Setting casing also takes time. Consequently, there are economic incentives for a well operator to set as few casing strings as possible.

52. As a well is drilled, it encounters different layers of rock, some of which contain fluids—e.g., hydrocarbons or brine—within the pore spaces of the rock. These fluids are under pressure and, if the rock has sufficient permeability, will flow into an area of lower pressure. When formation fluids unintentionally flow into the wellbore, it is called a "kick." Unchecked, a kick can develop into a "blowout," an uncontrolled flow of formation fluids into the wellbore and possibly to the surface. Kick events involving oil or gas are particularly dangerous given the flammable nature of the hydrocarbons.

53. During normal drilling operations, the primary means of preventing kicks and keeping the well under control is by maintaining an "overbalanced" state; i.e., pressure in the

wellbore is greater than the "pore pressure" of any exposed formation(s). This is typically achieved by pumping a dense drilling fluid, commonly known as "drilling mud" or simply "mud," into the well. Generally speaking, if the "mud weight" (a combination of mud density and the length of the mud column) is greater than the pore pressure, the well will be overbalanced and formation fluids should not migrate into the well.

54. If the only concern was ensuring that formation fluids did not flow into the well, then a well operator would maintain a very high mud weight. This is not the only concern, however. If the mud weight exceeds the "fracture gradient" of the exposed formation, the rocks will fracture. If this happens, the mud may escape into the formation—what is called "lost returns." Lost returns can lower the pressure inside the well to the point it becomes "underbalanced," resulting in a kick. Large fractures can also cause "underground blowouts," where there is an uncontrolled flow of formation fluids through the well from one zone to another.

55. Thus, deepwater drilling requires a delicate balance between pore pressure, mud weight, and fracture gradient. Mud weight must be kept above the pore pressure but below the fracture gradient. In fact, federal regulations required well operators to maintain a certain "safe drilling margin" between their mud weight and the fracture gradient.[17] As the United States' expert, Dr. Alan Huffman, explained, the drilling margin is intended to provide a sort of cushion for drilling operations. If the well encounters an area with higher pore pressure, the operator will be able to increase the mud weight (to overpower the pore pressure and suppress a kick) without

[17] For example, if a fracture gradient is 15.0 pounds per gallon ("ppg") and the safe drilling margin is 0.5 ppg, the mud weight may not exceed 14.5 ppg. *See* 30 C.F.R. § 250.427.

fracturing the exposed rock. If an operator cannot maintain the specified safe drilling margin, federal regulations require it to "suspend drilling operations and remedy the situation."[18]

ii. Drilling Operations at Macondo

56. Drilling the Macondo well did not go smoothly. Some called it the "well from hell."[19]

57. Many of the problems at Macondo stemmed from the fact that the well encountered increasingly fragile sandstone. This contributed to a narrow window between pore pressure and fracture gradient, particularly as the well got deeper. BP was aware of this issue, but did not always manage it properly.

58. On October 26, 2009, while drilling with essentially no margin between the mud weight and the fracture gradient—much less the safe drilling margin required by the MMS—the MARIANAS experienced a kick at a depth of 8,970 feet. The well was shut in (i.e., one or more of the sealing elements in the BOP were used to seal the well) and well control operations were initiated, which succeeded. BP decided to drill 100 more feet so it could set casing in hard shale rather than in the delicate sandstone. As BP contemporaneously acknowledged, its decision to drill another 100 feet with no drilling margin came with a risk that it might encounter "another overpressured sand package that would initiate a potentially uncontrollable well control event."[20] The well was successfully drilled forward and BP was able to set the casing in shale. Still, the casing was set significantly shallower than BP had planned. As Transocean's expert, Calvin Barnhill, concluded, "Simply put, the well had run out of drilling margin requiring the 18" drilling liner to be set 917' high."[21]

[18] 30 C.F.R. § 250.427(b).
[19] TREX 3188 at 1 (Bob Kaluza interview notes); Transcript at 3717:12-3718:4 (Keith).
[20] TREX 1337 at 10 (BP Power Point Review of Drilling Operations between 10/21/09 and 10/28/09).
[21] TREX 7676 at 16 (Barnhill Expert Report).

59. The HORIZON experienced another kick on March 8, 2010, at a depth 13,250 feet, when it drilled into a higher-than-anticipated pore pressure area. The well was successfully shut in; however, the formation had collapsed around the drill pipe, resulting in a "stuck" pipe. The pipe was severed with explosives and a cement plug was placed around the severed piece of pipe at the bottom of the well. The well was then sidetracked; i.e., the HORIZON drilled around the stuck pipe and then continued downwards.

60. The cause of the March 8th kick was BP's decision to drill faster than its geologists could analyze the data from the well, BP's decision to ignore the information it did have, or both.[22]

61. The well also experienced multiple lost returns incidents.

62. Notably, on April 4, 2010, the well lost total returns at a depth of 18,260 feet and was shut in. Losing total returns means that all of the mud pumped from the rig escaped through open fractures in the formation at the bottom of the well.

63. BP decided to spend the next 5 days pumping wellbore strengthening treatments in an effort to repair the formation. BP also reduced the mud weight. These efforts succeeded insofar as the well stopped losing returns, but the formation remained in a very fragile state.

[22] BP's Geological Operations Coordinator concluded shortly after the March 8th kick that "the accelerated rate of penetration and the resulting 'onslaught' of drilling indicators exceeded the ability of all team members to effectively recognize, properly communicate, and decisively act upon available data." TREX 214 at 4. Another BP geologist expressed the idea more succinctly: "drilling like a bat out of hell in these PP [pore pressure] narrow-window wells is perhaps not wise." TREX 1072 at 1. A third BP geologist voiced a slightly different view: "After deciding to drill ahead, we encountered the losses. We were aware of the upper limit of the ECD [equivalent circulating density] and exceeded it because we didn't believe the MWD [measurement while drilling]LOT [leak off test] values. ***I'm not sure it was a lack of communication or awareness as much as a 'we can get away with this' attitude*** . . . . Prior to the kick, it was an active decision on the part of the drilling team to drill with a high ROP [rate of penetration] and let the cuttings take up the mudweight rather than drill at a moderate rate and raise the MW [mudweight] . . . I'm sorry to push back on the lessons learned. I know you've got to get something out there to make it look like we wont do this again. But without obvious indicators and with the real push to make hole and skip the contingency liner, I don't see us really learning." TREX 1136 (emphasis added).

64. "At this point, [BP] was faced with a tough decision."[23] At 18,260 feet the well had encountered the primary reservoir sands, but BP needed to drill another 100 feet to ensure that the well was through the entire primary reservoir package and to be able to conduct wireline evaluation operations and completion procedures. However, as BP's Geological Operations Coordinator observed, drilling further meant it would be drilling with "minimal, if any, drilling margin."[24]

65. On April 9, 2010, BP decided to drill the extra 100 feet. Dr. Huffman, whom the Court found to be credible, viewed this decision as "one of the most dangerous things [he] had ever seen in [his] 20 years' experience" and "totally unsafe."[25] The Court agrees that the decision was dangerous and further finds that it was motivated by profit.

66. After drilling the extra 100 feet BP called total depth. The drilling operation concluded at that point.

67. At 18,360 feet the well had reached its primary objective sands, but not the deeper, secondary objectives. Indeed, the original planned depth for the Macondo well was 20,200 feet. BP called total depth early because it "had simply run out of drilling margin."[26] BP's Geological Operations Coordinator stated, "Drilling ahead any further would unnecessarily jeopardize the wellbore . . . . At this point it became a well integrity and safety issue."[27]

68. The United States' expert, Dr. Huffman, and BP's expert, Dr. Adam Bourgoyne, disagree over whether the decisions BP made relative to drilling were safe, in accordance with federal regulations, and consistent with industry standards.[28]

---

[23] TREX 1220 (E-mail from Robert Bodek, BP's Geological Operations Coordinator, dated April 13, 2010).
[24] *Id.*
[25] Transcript at 750:14-19 (Huffman).
[26] TREX 1220 (E-mail from Robert Bodek, BP's Geological Operations Coordinator, dated April 13, 2010).
[27] *Id.*
[28] Both experts agree on one point, however: When BP drilled forward in October 2009 with little or no drilling margin, it violated 30 C.F.R. § 250.427.

69. Although the Court found both experts well qualified, on the whole, the Court agrees with Dr. Huffman's conclusions.

70. Dr. Bourgoyne points out that the blowout occurred during the temporary abandonment procedure, days after the drilling phase concluded. He concludes, then, that BP's decisions during drilling had nothing to do with the blowout, explosion, or oil spill.

71. Dr. Bourgoyne's point is not without merit, but the Court does not entirely agree. Although drilling operations concluded without major catastrophe, the decision to drill the last 100 feet of the well with little or no margin left the wellbore in an extremely fragile condition.[29] This resulted in the presence of a large amount of debris in the well when the production casing was set in the well a few days later. As will be explained, this debris compromised the production casing, which led to the incorrect placement of cement, which in turn permitted hydrocarbons to enter the well on April 20, 2010. Therefore, BP's decision to drill the final 100 feet was the initial link in a chain that concluded with the blowout, explosion, and oil spill.

iii. Post-Drilling Operations: Production Casing and Temporary Abandonment

72. As of April 9, 2010, BP was $60 million (60-70%) over budget and 54 days behind schedule on the Macondo well. For each additional day the HORIZON remained at the Macondo well, BP lost approximately another $1 million. Moreover, the HORIZON was under pressure to get to the Nile well, and then to the Kaskida well, which BP needed to spud by May 16th or face losing the lease.

73. After calling total depth, BP planned to set production casing and then temporarily abandon the Macondo well.

[29] Indeed, many of BP's subsequent decisions were driven largely by the desire to avoid any further damage to the rock formation.

74. The production casing is discussed below.[30] Temporary abandonment is the process by which a well is secured so the operator can safely leave the well before returning to begin completion operations. It involves placing cement or mechanical barriers in the well to replace the barriers formerly provided by the drilling mud and the BOP, which willd depart with the MODU. It was intended that another rig would eventually come to Macondo, drill through the temporary barriers, perform completion operations, and turn Macondo into a producing well.

75. The temporary abandonment procedure ultimately selected for the Macondo well involved a series of steps. These included (1) setting a cement plug at the bottom of the well (known as the "production casing cement"), (2) displacing some of the mud in the well to seawater and performing a negative pressure test, (3) displacing all of the mud above 8,367 feet to seawater, and (4) placing a second cement plug between 8,067 feet and 8,367 feet.

76. When the blowout occurred on the evening of April 20, 2010, steps (1) and (2) were complete and step (3), known as "final displacement," was underway.

D. Production Casing

i. Long String Casing vs. Liner With Tieback

77. After a well has been drilled to total depth, additional tubing is typically installed that will allow hydrocarbons to be moved from the target formations to the surface. These lengths of tubing are known as production casing or production liners.

78. BP selected a long string production casing for the Macondo well, which extends continuously from the wellhead at the seafloor to the bottom of the well.

[30] *Infra* Part III.D.

79. Figure 3 illustrates a long string production casing.

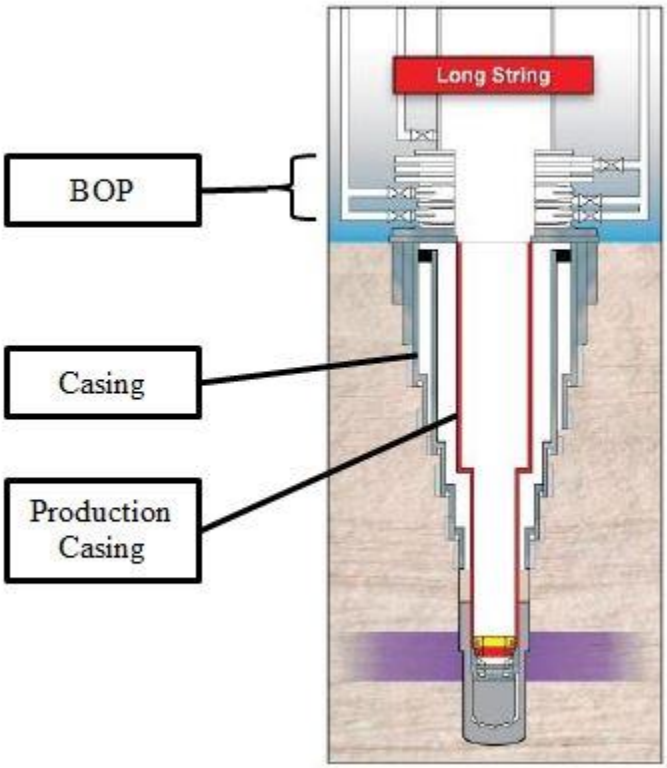

Figure 3 [31]

80. Other options were available, such as a production liner. A production liner attaches to the bottom of the previous casing and extends down to the bottom of the well. The liner is later "tied back" to the wellhead with separate casing.

[31] TREX 8140 at 41 (Beck Expert Report) (labels added).

81. Figure 4 illustrates a production liner (left) and the liner with tie-back (right).

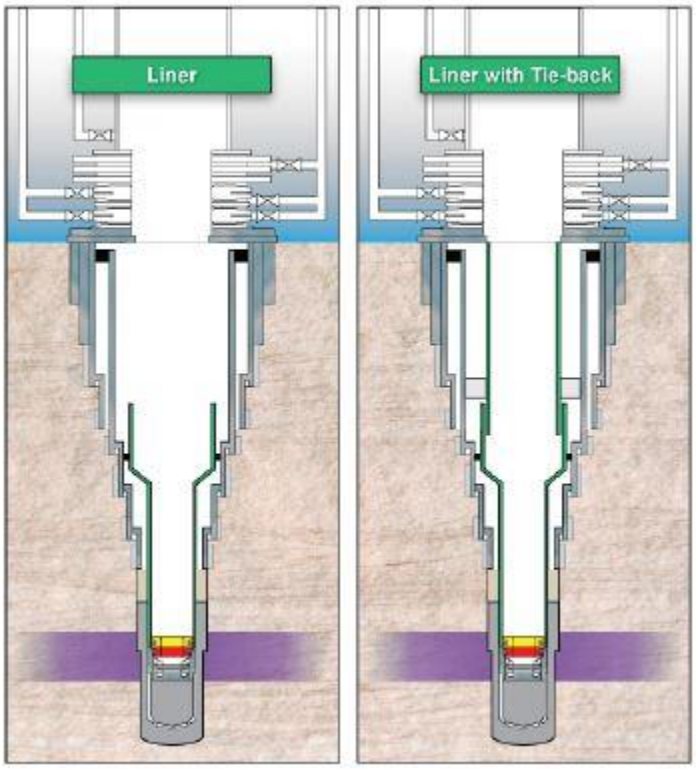

Figure 4 [32]

82. The Court heard competing opinions regarding the reasonableness of BP's decision to use a long string production casing instead of a production liner with tieback. Several parties proposed that BP's decision was unreasonable and primarily or entirely driven by a desire to cut costs.

83. The weight of the evidence does not show that BP's decision to use a long string production casing was unreasonable. It is clear that BP's engineering and operational personnel thoroughly debated this issue. There were pros and cons associated with each option, such that one did not appear significantly more advantageous over the other at the time BP made its decision. The initial cost savings associated with the long string production casing did enter the analysis, but it was one of several factors considered.

[32] TREX 8140 at 41 (Beck Expert Report).

84. Furthermore, using a long string production casing instead of a production liner did not cause or contribute to the blowout. As the Court understands the issue, the argument that BP should have used a liner is premised on the theory that hydrocarbons flowed up the outside of the production casing. At trial, however, the parties generally agreed that hydrocarbons entered the production casing near its bottom and flowed up the inside of the casing. Therefore, the production casing versus production liner issue appears to be of little relevance.

ii. Running the Production Casing

85. The operation to run the production casing into the Macondo well commenced on April 18 at approximately 3:30 a.m. and concluded a day-and-a-half later on April 19 at around 1:30 p.m.

86. The evidence reflects that there was a significant amount of debris in the well when the production casing was run on April 18 and April 19. This was due to the fragile wellbore.

87. As the production casing was run down the well, some of the debris flowed up inside the casing.

88. The bottom of the production casing was set into debris at the bottom of the well. This applied substantial compressive force to the production casing, causing it to buckle.[33]

[33] Several pieces of evidence support the conclusions that there was debris in the well, the production casing was set in debris, and the production casing was compressed and buckled. Prior to running the production casing, a wireline tool failed to reach the bottom of the well "due to borehole conditions," and had to start logging the well at 18,280 feet, rather than from the total depth, 18,360 feet. TREX 3540. On April 16, 2010—a few days after the wireline event and two days before running the production casing—BP engineer Brian Morel asked, "I want to know if [the bottom of the production casing is at] 18,200' and [if it is] set down on something how much weight can I slack off before I start to see buckling?" TREX 4515. Halliburton employee Preeti Paikattu responded that the production casing will begin to buckle when 30,000 pounds of compressive force is applied at the bottom of the production casing. Halliburton's expert Dr. Gene Beck explained at trial that data shows the production casing actually experienced as much as 140,000 pounds of compressive force when it was landed on April 19. When the production casing was run, the float collar (discussed below) was in the unconverted position without a mud filter. This allowed drilling mud and any debris in that mud to flow up the production casing and past the float collar as the casing was run down the hole. Finally, the drill crew was unable to circulate mud through the well after the

89. The significance of the previous two findings will be explained later.[34]

E. Overview of Cement Issues

90. As mentioned above, a major step in the temporary abandonment procedure involved setting a cement plug in the bottom of the well; i.e., the production casing cement job. The purpose of this cement was to achieve zonal isolation, i.e., to isolate the hydrocarbon-bearing zones in the formation from the well and prevent hydrocarbons from migrating into the well. It was intended that the production casing cement, once pumped into place and sufficiently hardened, would take the place of the drilling mud as the primary barrier to hydrocarbon influx.

91. No one, not even the cement contractor Halliburton, disputes that the cement failed to achieve zonal isolation. However, there are differing opinions as to why the cement failed.

92. There are two dimensions to the cement issue. One concerns whether the cement pumped down the Macondo well was stable, and if not, whether this was due to an inherent vice in the cement or some outside factor. This focuses on, among other things, the composition of cement slurry; or as the United States' expert Glen Benge put it, the "chemistry" behind oil well cementing. The other dimension concerns how the cement was placed in the well; specifically, whether the cement was placed across the hydrocarbon bearing sands as intended. Mr. Benge referred to this as the "physics" of oil well cementing.

93. Mr. Benge explained that proper cementing takes a combination of chemistry and physics. In other words, the right type of cement must be placed in the right place in order to create a barrier to flow. If either component fails, then the cement will not achieve zonal isolation.

---

production casing was set. The parties agree that circulation could not be achieved because debris was blocking the flow path.

[34] *See infra* Parts III.F.ii.-v.

94. The Court will discuss cement placement first and cement composition second.

F. Cement Placement

95. The production casing cement job at Macondo was designed to place "foamed" cement in the narrow space between the production casing and the formation (known as the "annulus"[35]) and across the hydrocarbon bearing zones. To do this, cement on the rig had to be pumped down the production casing, out the "reamer shoe,"[36] and then up the annulus.

96. Before cement could be pumped, however, a mechanical device known as a "float collar" had to be converted from a two-way valve to a one-way valve.

i. The Weatherford M45AP Float Collar

97. At Macondo, the bottom 189 feet of the production casing was called the "shoe track." The float collar was located at the top of the shoe track.

98. A float collar is essentially a valve. Its purpose is to prevent unset cement, once pumped into the annulus, from "u-tubing" and flowing back into the casing. The float collar also serves as a landing profile for plugs later sent down the well as a part of the cementing operation.

99. The specific model float collar used at Macondo was the Weatherford M45AP float collar. The M45AP float collar contained two spring-loaded flapper valves. In "unconverted" mode, an internal sleeve called an "auto-fill tube" holds these valves open, which allows fluid to flow through the float collar in either direction (up or down). Shear pins hold the auto-fill tube in place across the valves. When the float collar is "converted," the auto-fill tube is ejected from the valves, allowing them to close. When properly converted, fluid from above can

[35] Annulus or annular space refers to the doughnut-shaped area which surrounds a cylindrical object within a larger cylinder. These Findings of Fact will use "annulus" in a variety of contexts.

[36] The reamer shoe was located at the very bottom of the production casing. It was designed to help guide the production casing past obstructions as it was run down the hole to the bottom of the well. The reamer shoe also contained three small ports through which fluid could flow into or out of the casing.

push the valves open and flow down through the float collar; however, the valves prevent fluid from flowing back up through the float collar.

100. Inside the auto-fill tube was a 2-inch diameter ball. As designed, the ball was free to float the length of the auto-fill tube but could not exit the tube at either end. As the production casing was run down the well in unconverted mode, drilling mud would flow up through the bottom of the auto-fill tube and push the ball to the top tube. Three fingers would keep the ball from exiting the tube, and mud would flow around the ball and out the top of the tube. Once casing was set, the ball would fall to the bottom of the auto-fill tube and land on a ball seat, blocking the relatively large opening at the bottom of the auto-fill tube. Smaller ports in the side of the auto-fill tube would remain open, however. At this point, mud pumped down through the auto-fill tube should exit the tube through these smaller ports. These ports restricted flow through the tube, but flow should not be blocked entirely. The intended result is that the restriction would create a pressure differential across the auto-fill tube; i.e., there will be greater pressure inside and above the auto-fill tube (before the restriction) than there is below the auto-fill tube (past the restriction). As the pump rate increases, so does the pressure differential, until the shear pins holding the auto-fill tube give way and the tube is ejected from the valve openings.

101. Weatherford's specifications stated that converting the M45AP float collar required circulating[37] drilling mud at a rate of 5 to 8 barrels per minute ("bpm") to create a flow-induced pressure differential of 500 to 700 psi.

[37] In this context, "circulate" means to pump mud from the rig down the casing, through the float collar, out the ports in the reamer shoe, up the annulus between the casing and the well bore, and back to the rig.

102. Figure 5 depicts a M45AP float collar being properly converted:

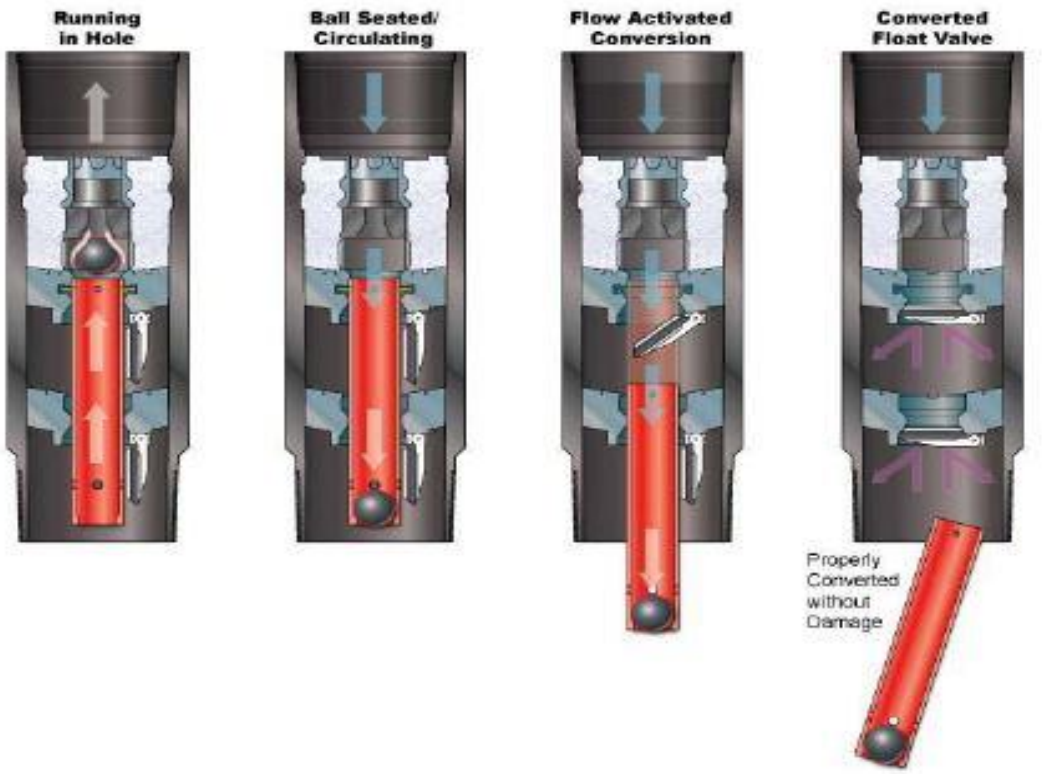

Figure 5 [38]

ii. <u>The Attempted Conversion of the Float Collar</u>

103. Successful conversion of the float collar is a prerequisite to commencing cementing operations.

104. BP was responsible for determining whether the float collar converted and whether the cement job should commence.

105. The operation to convert the float collar at Macondo started on April 19, 2010 around 2:30 p.m., after the production casing was run into the well.

106. The float collar could have been converted prior to running the casing down the hole. In fact, BP's own "best practices" called for converting the float collar before running it

[38] TREX 8140 at 68 (Beck Expert Report).

across any hydrocarbon bearing zones. However, BP was concerned that running the production casing with the float collar converted might create high surge pressures, that could further damage the fragile rock formation. Consequently, BP decided not to convert the float collar until after the production casing was fully run.

107. The decision to run the production casing with the float collar in unconverted mode was not unreasonable given the circumstances, at least not when viewed in isolation. In fact, the M45AP float collar is specifically designed for "[p]ressure sensitive formations and close tolerance annuli, where surge reduction or fast running speeds are desirable."[39] However, running the casing with the float collar in unconverted mode increased the risk that debris from the well would flow into and plug the reamer shoe, the float collar, or both. BP could have mitigated this risk by using a shoe filter, which is designed to filter cuttings and other debris that could possibly plug the float equipment. In fact, Weatherford's specifications stated that the M45AP float collar "should be run with a Weatherford Mud Master filter shoe."[40] BP did not use any type of shoe filter.

108. When BP first attempted to convert the float collar, the rig crew could not circulate mud at all—mud was pumped down the well but there was no return mud at the surface. Pressure on the casing also started increasing during the attempted conversion.

109. The only explanation given at trial as to why mud would not circulate is that debris blocked the flow path. However, the parties disagree over exactly where the blockage or blockages occurred. The evidence reflects that on April 19, 2010, BP personnel involved with the Macondo well also believed debris blocked circulation, although they would not have known for certain how many blockages existed or exactly where the blockages were located.

[39] TREX 2582 at 1(Weatherford specifications for M45AP float collar).
[40] TREX 2582 at 5 (Weatherford specifications for M45AP float collar).

110. The Court finds that debris blocked the flow path at two points, if not more: the float collar and the reamer shoe.[41] Debris likely flowed up and around the auto-fill tube while the production casing was being run down the hole in unconverted mode. As Halliburton's expert Dr. Gene Beck pointed out, the smallest hole in the flow path, and therefore the easiest to clog, was the auto-fill tube. The reamer shoe's ports were likely clogged when the production casing was pressed into debris at the bottom of the hole.[42]

111. When mud circulation could not be initially achieved, BP directed the rig crew to repeatedly increase and then bleed off the pressure in the well—a process BP called "rocking"—which was intended to clear the debris.

112. Nine attempts were made over the course of two hours to clear the blockage and convert the float collar. Each attempt, with the exception of the sixth, used greater pressure than the last. During the sixth attempt the pressure was kept the same as it was for the fifth attempt, but the pump rate was increased from 1 bpm to 2 bpm.

113. During these nine attempts the pump rate never rose above 2 bpm. BP chose to keep pump rates low because it was concerned about damaging the fragile rock formation.

114. Circulation was achieved on the ninth attempt with 3,142 psi and a flow rate of 1 bpm. This is approximately five times the pressure and less than one quarter the flow rate called for in Weatherford's specifications.

115. Even after circulation broke, BP never directed the rig crew to pump at more than 4 bpm.

---

[41] *See supra* note 36 (defining "reamer shoe").
[42] *See supra* Part III.D.ii.

116. When circulation broke on the ninth attempt, there was a rapid depressurization from 3,142 psi to about 150-200 psi. After circulation broke, the circulating pressure was significantly lower than predicted.

117. After noticing the rapid depressurization and/or the low circulating pressure, BP personnel expressed concern:

118. A Halliburton cement engineer, while standing on the rig floor, overheard BP Well Site Leader[43] Bob Kaluza state "I need to make a phone call. ***We may have blown something higher up in the casing***."[44]

119. In a post-incident interview with BP investigators, Bob Kaluza was recorded as saying "[m]y opinion is that after it sheared the flow came back real quick. I said 'Wow look at how much fluid we got back.' Halliburton had modeled that at 4bbls/min pressure should be 570 psi. Ramped up in 1 bbl increments slowly to 4bbls/min at 350 psi. I said '***that is odd you guys this is very low***.' . . . Switched pumps from number 3 to number 4 took 205 psi to break over then at 4 bbls/min had 390 psi. ***That was an anomaly***. I discussed it with [BP Wells Team Leader] John Guide and Keith Dagle. John said pump cement."[45]

120. Brian Morel, a BP drilling engineer who was on the HORIZON at the time, wrote in an e-mail dated April 19, 2010, "Yah, we blew it at 3,142, ***but still not sure what we blew yet***."[46]

121. Mark Hafle, BP's senior drilling engineer in Houston, wrote in an e-mail dated April 19, 2010, "Shifted at 3,142 psi. ***Or we hope so***. We are [circulating] now."[47]

---

[43] The "Well Site Leader" is BP's top representative on the rig. The industry term for this person is "company man." There were two BP Well Site Leaders on the DEEPWATER HORIZON: Bob Kaluza and Don Vidrine.
[44] Transcript 6305:13-16 (Chaisson) (emphasis added).
[45] TREX 3188 (emphasis added).
[46] TREX 2584 (emphasis added).
[47] TREX 4457 (emphasis added).

122. BP did take some steps to investigate these anomalies.

123. BP directed Transocean to circulate mud with a different mud pump, in case the low circulating pressure was due to an issue with the pump. Circulating pressure increased after switching pumps, however, it still remained significantly lower than expected. Bob Kaluza's statement above confirms that the circulating pressure was still viewed as an anomaly even after switching pumps.

124. BP also considered the possibility that there was a leak in the system. BP thought that the diverter tool[48] might be leaking, but was able to confirm that it was closed and not leaking.

125. After the diverter tool was eliminated as a possible leak, BP consulted with M-I about the circulating pressures. M-I's response to BP's inquiry is reflected in an e-mail dated April 20, 2010 at 3:34 p.m. (the day after the attempted float collar conversion), where M-I's Doyle Maxie wrote:

> I have gone through my inputs for VH [virtual hydraulics] for the modeling I did for circulating prior to cementing casing. I have tried several different inputs, and the closest I can get is 480 psi and that is taking out the fann 70 data which is not giving a reasonable estimate of true pressure. ***I have had several individuals double check and critique[] my inputs and still cannot explain the difference.*** Looking to predictions from the past modeling the pressure is never quite the same when we are drilling so I would not expect them to be the same for this model. ***Pressure is one of the hardest numbers to correlate.*** I would be interested to see what Landmark would predict as circulating pressures. I am open to sit down and discuss the inputs with the team. ***John and I went through some scenario[s] this morning and we could not do any better than 480 psi.***[49]

[48] A diverter tool is a "downhole tool in the drill pipe above the casing that lets flow divert from inside the casing to the annulus." Transcript at 7344:14-15 (Beck). This is not to be confused with the rig's overboard diverter, which is discussed later.

[49] TREX 1814 (emphasis added).

Mr. Maxie's e-mail was sent to numerous BP personnel involved with the Macondo well, including John Guide (Wells Team Leader), Brett Cocales (Senior Operations Engineer), Mark Hafle (Senior Drilling Engineer), and Brian Morel (Drilling Engineer).

126. Although Mr. Maxie's e-mail notes that modeled and actual pressures are not always the same and that pressure is "one of the hardest numbers to correlate," the fact remains that the actual circulating pressure was lower than the modeled pressure. Furthermore, although several individuals reviewed Mr. Maxie's calculations, no one could "explain the difference" between the modeled and actual circulating pressures. Therefore, M-I's response to BP's inquiry did not eliminate the possibility that there was a leak. Moreover, BP did not have Mr. Maxie's response until the afternoon of April 20, ***after*** BP determined the float collar had converted and instructed Halliburton to pump the cement.

127. BP concluded on April 19 that the float collar converted based on the fact that circulation was established. When asked on direct examination why he believed on April 19 that the float collar converted, BP Wells Team Leader John Guide responded, "By the fact that we could circulate."[50]

128. Under the circumstances, achieving circulation was consistent with converting the float collar. However, achieving circulation did not establish that the float collar actually converted.

129. BP never verified whether or not the float collar actually converted.

130. After the cement job was pumped, a "float check" was performed, but it did not verify whether the float collar actually converted. During a float check, pressure in the well is bled to zero and fluid from the well monitored for a period of time. If the flow does not stop, it is an indication that the valves in the float collar have not converted and the heavier fluids in the

[50] Transcript at 8743:19 (Guide).

annulus are flowing back into the casing. However, a reliable float check requires sufficient differential pressure in the annulus to lift the plug that has been forcibly set on top of the float collar. All of the experts who considered the topic agreed that the differential pressure during the float check was too low to lift the plug.

131. As the United States' expert Glen Benge explained, BP could have verified whether the float collar converted by having the drill crew attempt to reverse circulate; i.e., pump mud down the annulus and up the casing. If the float collar had converted, the drill crew would not be able to reverse circulate, because the closed flapper valves would prevent mud from flowing up through the float collar.

132. BP did not attempt to reverse circulate the well.

133. Without verifying whether the float collar converted and without resolving whether something was "blown" or why the circulating pressure was low—other than to conclude, the next day, that the predicted pressures must have been incorrect—BP instructed Halliburton to commence the cement job.

iii. The Float Collar Did Not Convert

134. As explained above, the auto-fill tube must be ejected from the valve openings in order to convert the float collar.

135. Halliburton's expert, Dr. Gene Beck, opined that the float collar experienced a mechanical failure when circulation was achieved at 3,142 psi. Dr. Beck testified that debris inside the production casing probably settled in and around the float collar, packing off the auto-fill tube. This held the auto-fill tube in place across the valves and prevented the shear pins from shearing. According to Dr. Beck, on the ninth conversion attempt the ball seat at the bottom of the auto-fill ruptured and the ball inside the tube ejected, but the auto-fill tube remained across

the flapper valves. This would allow fluid to pass freely through the float collar, but the flapper valves would remain open; i.e., unconverted.

136. Bill Ambrose, who was in charge of Transocean's incident investigation, testified that the Transocean investigation team similarly concluded that the float collar was clogged with debris and that the float collar never converted.

137. Dr. Beck's opinion relies in part on testing performed during Transocean's post-incident investigation. This testing reflects that the auto-fill tube could be ruptured and the ball ejected at pressures substantially less than 3,142 psi. During one test the ball shot out the bottom of the auto-fill tube at 1,477 psi. During a second test the ball shot out of the tube at 1,840 psi.

138. Dr. Beck's theory also relies on the fact that the pressure dropped rapidly from 3,142 psi after circulation was achieved. According to Dr. Beck, the rapid depressurization was a signature of mechanical failure, not of debris unplugging. Dr. Beck explained that the pressure response for clearing blockage is a gradual change from high to low pressure as debris is cleared and circulated out. This description is consistent with testimony from Transocean's expert, Calvin Barnhill, when he testified about events that occurred on April 20.[51]

139. BP's counsel pointed out that some of the components on the float collar Transocean tested were different from those used at Macondo. BP also contends that Transocean's test did not allow the auto-fill tube's shear pins to activate. BP concluded that Transocean's test was not representative of actual conditions. Bill Ambrose essentially responded that the internal components of the float collar were the same and/or the differences were irrelevant for purposes of the test.

[51] Transcript at 4290:7-4291:9 (Barnhill) (explaining that a gradual change in pressure was indicative of debris being cleared from the kill line, not a valve opening).

140. Brent Lirette, a Weatherford employee, testified that it is not possible for the ball inside the auto-fill tube to be ejected while the auto-fill tube remained in place.

141. BP also conducted tests on the float collar after the incident. These tests reflect that the M45AP float collar would convert at 3,142 psi without damaging the float collar. The float collar tested on behalf of BP used the same components as the float collar used at Macondo.

142. Halliburton points out that BP's tests did not account for the effects of debris packed inside the float equipment. Dr. Beck testified that "[O]nce you plug things up . . . all bets are off on the performance of shear pins . . . . When you have debris around mechanical devices . . . the performance of that device is not always as designed. . . . I've had this happen before where shear pins don't shear when they're supposed to when . . . you're working in an unclean wellbore environment."[52]

143. Data from the negative pressure test that was conducted on the afternoon of April 20, 2010, tips the balance in favor of the theory that the float collar did not convert.[53] By the end of the Phase One trial there was general agreement that hydrocarbons entered the casing at some point below the float collar and then flowed up the casing. Although Weatherford's float collar is not marketed as a barrier to flow, the M45AP float collar, once converted, is rated to withstand 5,000 psi differential pressure from below. Weatherford's Brent Lirette testified during cross examination that he would expect the converted float collar to withstand 5,000 psi differential pressure from below after the float collar converted. Transocean's post-incident tests showed that the flapper valves, when properly converted, could hold at least 3,000 psi from below. During the negative pressure test, 1,400 psi of pressure registered on the drill pipe, which was above the float collar. Given that hydrocarbons entered the casing below the float collar, the

[52] Transcript at 7343:9-10, 7378:11-15 (Beck).
[53] The negative pressure test is described in Part III.H.ii, *infra*.

1,400 psi pressure during the negative pressure test must have communicated through the float collar in order to register on the drill pipe. Therefore, if the float collar had converted, it is unlikely 1,400 psi would have registered on the drill pipe.

144. The Court finds that the float collar did not fully and properly convert on April 19, 2010, or anytime thereafter. On the ninth conversion attempt, the float collar experienced a mechanical failure. The most likely point of failure was the ball seat at the bottom of the auto-fill tube.

iv. The Shoe Track Breached During the Attempted Float Collar Conversion

145. As discussed above, Dr. Beck believes the rapid drop in pressure from 3,142 psi is a signature of mechanical failure, not of debris unplugging.[54] Dr. Beck opined that two mechanical failures occurred. The first failure was the float collar, discussed above. Dr. Beck also testified that a second failure occurred in the shoe track (i.e., the casing below the float collar).

146. As mentioned above, the circulating pressures were lower than expected after circulation was achieved at 3,142 psi.

147. Dr. Beck opined that the rapid depressurization and lower-than-expected circulating pressure, when viewed together, demonstrate that rather than circulating mud through the three small ports at the bottom of the reamer shoe, the rig was actually circulating mud through a larger breach or opening in the shoe track below the float collar.

148. This opinion is consistent with the testimony of Bill Ambrose, who stated that the lower-than-expected circulating pressure indicated that "something has opened up in a larger

[54] As noted above, this opinion is consistent with testimony by Transocean's expert, Calvin Barnhill.

geometry" in the path of circulation.[55] Similarly, Mr. Barnhill proposed in his report that the low circulating pressure indicated "[p]ossible damage to casing shoe track."[56]

149. Dr. Beck's opinion is also consistent with testimony by United States' expert Glen Benge, who stated:

> [I]t was acknowledged that whenever that 3,100-odd psi – when it suddenly released, that's a big concern — that's a big risk because at that point you do not know where in the well you're circulating. You've got a sudden pressure surge, and pressures were much lower, showing that some restriction that you used to have isn't there anymore.
> . . .
> [I]f you broke something and the circulating pressure is lower, you're not really sure of where you're circulating.
> . . .
> Operationally you could have had a break in that well somewhere, and you're circulating at a much higher point.[57]

150. Notably, Bob Kaluza's statement on April 19, "We may have blown something higher up in the casing" shows that the Well Site Leader was concerned that the casing may have breached on the ninth attempt. Brian Morel's statement on April 19, "Yah, we blew it at 3,142, but still not sure what we blew yet," arguably reflects a similar concern.

151. Returning to Dr. Beck's theory, Dr. Beck believes that, up until the float collar mechanically failed, the debris blockage in the float collar/auto-fill tube prevented pressure above the float collar from communicating below it. When the float collar failed on the ninth attempt, the 3,142 psi of pressure[58] that had been isolated at and above the float collar, suddenly transmitted to the casing below. Dr. Beck explained that the rapid depressurization from 3,142 psi indicates that a sudden pressure surge or shock wave was imparted on the casing below the

[55] Transcript 6174:14-19 (Ambrose).
[56] TREX 7676, Attach. A (Barnhill Expert Report).
[57] Transcript at 2311:9-14, 2313:3-11 (Benge).
[58] For clarity, the Court understands that 3,142 psi represents differential pressure. The ambient pressure at the bottom of the well was much higher than 3,142 psi.

float collar at this time. This is consistent with Glen Benge's testimony quoted above, particularly his reference to pressure "suddenly releas[ing]" and "a sudden pressure surge."

152. In response to questions during cross examination about how it was possible for 3,142 psi to breach casing that was rated to withstand substantially higher pressures, Dr. Beck explained that the casing was already in a state of extreme stress when the pressure surge occurred. Dr. Beck testified that when the production casing was run down the wellbore and set into debris,[59] as much as 140,000 pounds of compressional force was applied to it. This caused the casing to buckle.[60] Dr. Beck explained that buckling magnified the stress due to compression by a factor of 1.5 to 2.5, because the casing is bent in addition to being compressed.

153. Dr. Beck's testimony about buckling is consistent with e-mails dated April 16, 2010, between BP engineer Brian Morel and Halliburton employee Preeti Paikattu.[61] There Mr. Morel asked at what point the production casing would buckle if it were landed on top of an obstruction. Ms. Paikattu responded that the casing would buckle if 30,000 pounds of compressional force was applied to the casing, and that this buckling would occur low in the casing.

154. Dr. Beck concluded that the sudden pressure surge or shock wave that was released on the ninth conversion attempt, combined with the extreme stress already imposed on the casing, was sufficient to breach the shoe track below the float collar.

155. The Court agrees with Dr. Beck's opinion and finds that a breach or opening occurred in the shoe track during the ninth attempted conversion.

---

[59] *See supra* Part III.D.ii.

[60] Dr. Beck's exact words were that the compression applied to the production casing at Macondo would "buckle the daylights out of it." Transcript at 7380:4 (Beck).

[61] TREX 4515.

156. The Court finds particularly persuasive the fact that a breach in the shoe track is consistent with, and thus provides an explanation for, the data recorded after circulation was achieved—most notably the lower-than-expected circulating pressures. Contrariwise, the Court finds BP's apparent explanation for the low circulation pressures—that the predicted pressures must have been incorrect—unpersuasive.

157. Furthermore, a breach in the shoe track is also consistent with, or at least is not incompatible with, other evidence and testimony regarding cement placement and how hydrocarbons entered the well, as explained below.

v. Cement Was Pumped Through the Breach in the Shoe Track and Placed Improperly; Hydrocarbons Later Entered the Well Casing Through the Breach in the Shoe Track

158. Pumping the production casing cement began at 7:30 p.m. on April 19, 2010, and finished around 12:30 a.m. on April 20, 2010. Approximately 60 barrels of cement were pumped, 48 barrels of which were "foamed" cement.

159. One purpose of the shoe track was to assist in placing cement in the annulus during the production casing cement job.

160. The production casing cement job was designed to pump unfoamed "cap" cement down the well first, followed by foamed cement, and then unfoamed "tail" cement.[62] As planned, the cap cement and the foamed cement would travel down through the float collar and shoe track, exit through the three holes in the reamer shoe, and then head up the annulus between the casing and formation.

161. If properly conducted, foamed cement should have been placed in the annulus across the hydrocarbon bearing zones. The cap cement would be in the annulus above the

[62] Base oil, spacer, and a bottom wiper plug were pumped ahead of the cap cement. A top wiper plug and spacer were pumped after the tail cement. *See infra* Figure 6.

foamed cement. A small amount of tail cement would also be in the annulus below the foamed cement. Tail cement would fill the shoe track.

162. Figure 6 illustrates the ***intended*** placement of cement fluids in the annulus and shoe track and across hydrocarbon-bearing zones (yellow) and brine-bearing zones (blue):

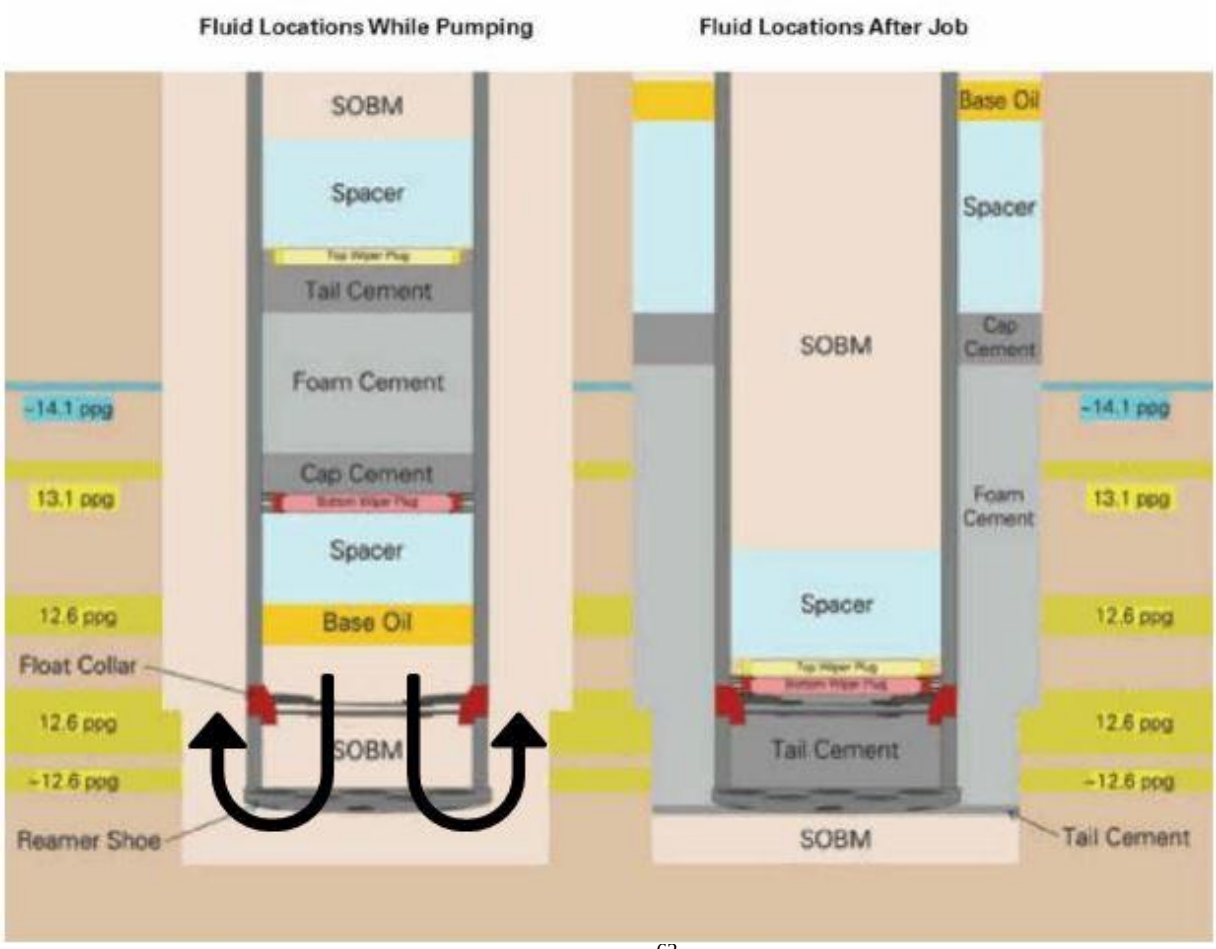

Figure 6 [63]

163. Dr. Beck testified that if there was a tiny breach or opening in the shoe track, a significant amount of the cement would exit the casing through that point rather than through the reamer shoe as intended. If the breach was greater than one square inch in diameter, virtually all of the cement would pass through the rupture point.

[63] TREX 0001 at 61 (BP Accident Investigation Report) (arrows added). "SOBM" stands for synthetic oil based mud, the type of drilling mud used at Macondo. Numbers represent the pore pressures in pounds per gallon. The M57B sand is not illustrated.

164. Dr. Beck further testified that cement pumped through the rupture would immediately turn up the annulus; no cement would be placed below the rupture point. Dr. Beck also testified that a breach in the shoe track would prevent cement from being placed in the shoe track.

165. Dr. Beck believes that cement was pumped through the breach in the shoe track, rather than through the holes in the reamer shoe. Consequently, cement was not placed across the hydrocarbon-bearing sands below the rupture point. Therefore, the hydrocarbon-bearing sands below the breach in the shoe track were left exposed to the well and had unrestricted access into the casing through the breach in the shoe track.

166. The Court agrees with Dr. Beck's theory.

167. As already noted, a rupture in the shoe track is consistent with the sudden drop in pressure from 3,142 psi and the lower-than-expected circulating pressures.

168. Dr. Beck also testified that the blowout occurred relatively quickly, which indicates that there was not much restriction to flow. Dr. Beck's theory regarding cement placement and the flow path of oil is consistent with the rapid blowout and little restriction to flow.[64]

169. Dr. Beck pointed out that his theory is also consistent with evidence from the relief well, which did not encounter hydrocarbons when it intercepted the upper annulus of the Macondo in September of 2010. He testified that the absence of hydrocarbons in the upper annulus shows that the cement placed above the rupture point did set up and provide a barrier to flow. Dr. Beck further explained that, if cement had been properly placed in the annulus and the shoe track, one would not expect some of the annular cement to set up while the rest of the lower annulus and shoe track did not. The Court agrees that the absence of hydrocarbons in the upper

[64] A rapid blowout is also consistent with an unconverted float collar.

annular section is certainly consistent with Dr. Beck's theory. However, the Court notes that this is not as persuasive as the other evidence supporting Dr. Beck's theory. For instance, the relief well evidence is also consistent with the competing theory that hydrocarbons entered the casing through the ports in the reamer shoe.

vi. The Court Is Not Persuaded by BP's Theories Regarding Float Collar Conversion, Cement Placement, and Flow Path

170. BP's position is that the float collar converted properly, the shoe track was not breached, and cement was properly placed in the annulus and shoe track. Furthermore, BP (and the private plaintiffs, Alabama, and Louisiana) believe hydrocarbons traveled through the foamed cement in the annulus, down the annulus, entered the casing through holes in the reamer shoe, through the tail cement in the shoe track, through the converted float collar, and up the casing.

171. BP believes that the foamed cement was unstable, which permitted hydrocarbons to migrate from the formation through the cement, down the annulus, and up into the casing through the reamer shoe. BP further proposes that the unfoamed, tail cement placed in the shoe track failed to stop the influx either because it was contaminated by the nitrogen from the foamed cement or because the hydrocarbons encountered the shoe track cement before it had an opportunity to harden. BP believes the float collar had converted, but failed to stop the hydrocarbons because a float collar is not intended to provide a barrier to hydrocarbon flow.

172. BP's theory that hydrocarbons entered through the reamer shoe is primarily based on the work of its expert, Morten Emilsen. Using sophisticated computer software, Mr. Emilsen created a model of the well based on certain known data. Mr. Emilsen then ran hundreds of computer simulations that made different assumptions about unknown data, such as flow path. The modeled results were compared with certain recorded data from the well (e.g., drill pipe

pressure). If the modeled results for a particular scenario did not match the recorded data, then Mr. Emilsen concluded that the scenario likely did not occur. When Mr. Emilsen assumed that the flow path was through the holes in the reamer shoe and that 13 to 16.5 feet of the formation was exposed to the well bore—what he termed "Case 7"—the modeling closely matched much of the known data. Based on this match, Mr. Emilsen concluded, among other things, that the flow path was "through a leaking casing shoe and up through the inside of the casing."[65]

173. Despite running hundreds of simulations, Mr. Emilsen never ran a simulation that assumed the flow path was through a breach in the shoe track below the float collar. Because he had not investigated that scenario, Mr. Emilsen could not state whether a model that assumed flow through a breach in the shoe track would also produce results matching the recorded well data. However, Mr. Emilsen did indicate that flow through the shoe track would probably have little effect on at least some variables.[66] Moreover, Mr. Emilsen could not exclude the breached shoe track as a plausible theory, given that he did not run this scenario through his modeling program.

174. Mr. Emilsen made a number of assumptions about the conditions at the bottom of the well. These assumptions cause the Court to question the accuracy of his conclusion insofar as it concerns the precise location and manner hydrocarbons entered the casing.[67]

175. In short, Mr. Emilsen's work does little to discredit the theory that hydrocarbons entered the casing through a breach in the shoe track. Mr. Emilsen's testimony does not prove

---

[65] TREX 40003 at 7 (Emilsen Report); *see also* TREX 7401. At trial Mr. Emilsen made clear that by "leaking casing shoe" he meant hydrocarbons traveled up through the holes in the reamer shoe.

[66] When asked to comment on a picture from Dr. Beck's report depicting a possible shoe track breach, Dr. Emilsen stated, "I think, the distance from – there is no scale here, but it's not a long distance. So in terms of frictional pressure drop, etcetera, I can agree that it's not a major part of the wellbore that you're disconnecting, if you like, with this picture." Transcript at 7896:16-20 (Emilsen).

[67] To be clear, the Court found Mr. Emilsen generally credible and believes that his modeling was accurate in many other respects.

that hydrocarbons entered through the reamer shoe, nor does it disprove that hydrocarbons entered through a breach in the shoe track.

176. BP's theory regarding flow path, etc., ignores or dismisses the data recorded after circulation was achieved on the ninth conversion attempt, particularly the lower-than-expected circulation pressure, which, as noted, indicated that a larger opening was created in the flow path. BP's theory also requires a succession of failures. While there is ample evidence to support the idea that the foamed cement was unstable, and therefore probably would have failed even if properly placed in the annulus, there is less evidence to support the notion that the tail cement in the shoe track also failed, and even less evidence that the float collar, if converted, would not have stopped pressure from communicating during the negative pressure test. Yet all of these things must occur in order for BP's theory to be correct.

177. To be fair, Dr. Beck also proposes what could be viewed as an unlikely chain of failures (production casing buckled, float collar clogged, auto-fill tube ruptured, shoe track breached). This comes as little surprise, though, given that BP's entire explanation for this tragedy and overarching theme at trial was that there was a series of failures.[68] The difference is that there is more support for Dr. Beck's chain of failures than there is for BP's chain of failures.

178. To conclude, the Court finds that when cement was pumped on April 19 and April 20, most of it exited the casing through a breach in the shoe track below the float collar, rather than through the reamer shoe. Consequently, no cement was placed in the annulus below the breach point, and little or no cement was placed in the shoe track below the breach point. When hydrocarbons later entered the casing on April 20, they flowed through the breach in the shoe track.

[68] *See, e.g.*, BP's Accident Investigation Report, p.32, Fig. 1 (TREX 00001) (depicting what has become known as the "Swiss cheese" failure model).

179. Given this conclusion, the Court further finds that BP's cementing program violated 30 C.F.R. § 250.420, which required it to, *inter alia*, "[p]revent the direct or indirect release of fluids from any stratum through the wellbore into offshore waters."

vii. Cement Bond Log

180. After a cement job is pumped, a cement evaluation technique such as a cement bond log ("CBL") can be used to evaluate whether zonal isolation was achieved. A CBL uses acoustic signals and associated software to derive a representation of the integrity of a cement job.

181. Although the location of the float collar in the production casing would have prevented a CBL from evaluating the entire annulus in the well's production interval, it still would have been able to determine the location of the top of cement. If the top of cement was not at the designed location, it would indicate that the cement job was not properly placed and/or that channeling[69] had occurred.

182. BP was responsible for deciding whether or not to run a CBL.

183. BP's internal best practices stated that BP should have performed a CBL.

184. When the Macondo cement job was performed, a Schlumberger team (another contractor hire by BP) was standing by on the HORIZON and could have performed a CBL if BP requested them to do so.

185. After the cement job on the morning of April 20, 2010, BP decided not to run the CBL and sent the Schlumberger personnel back to shore.

[69] Channeling is a condition in which cement flows preferentially only on some sides of the casing or borehole and thus does not provide radial coverage around all sides of the casing or borehole. Channeling creates potential communication paths for hydrocarbons.

186. BP's decision to not conduct the CBL accorded with a decision tree it had created specifically for the Macondo well temporary abandonment. The decision tree called for a CBL if "full returns" were not observed during the cement job.

187. Because full returns were observed during the cement job, BP decided to not run the CBL.

188. Additionally, during a teleconference meeting on the morning of April 20, 2010, BP Wells Team Leader John Guide asked if a CBL should be run. No one said it should. Employees from BP, Halliburton, and Transocean attended that meeting.

189. Lack of full returns indicates that cement or some other fluid in the well escaped into the reservoir during the cement job. Observing full returns is consistent with placing cement in the appropriate location. However, full returns do not establish that cement was placed correctly.

190. BP had multiple reasons to suspect the cement job would fail to achieve zonal isolation. A CBL would have resolved some of these suspicions.

191. As discussed above, BP had issues with attempting to convert the float collar and BP personnel expressed doubt about whether it had actually converted. BP knew that an unconverted float collar could result in the cement "u-tubing" out of the annulus and back into the well casing. There was also expressed concern that the casing had breached. BP knew or should have known that a breach in the casing could result in cement not being placed in the intended location. A CBL would have revealed if cement u-tubed, exited through a higher breach in the casing, or both. Therefore, BP's concerns should have motivated it to run the CBL.

192. BP knowingly assumed other risks with the production casing cement job. While these risks may not have contributed directly to the blowout, particularly in light of the Court's

conclusion that the shoe track was breached, BP's knowledge of these risks should have further motivated it to run the CBL. These risks include: BP's decision to use only 6 centralizers, despite being told by Halliburton's Jesse Gagliano that computer modeling predicted channeling would occur unless 21 centralizers were used;[70] and BP's decision not to perform a full bottoms-up circulation of mud prior to pumping the production casing cement job, despite BP's knowledge that there was debris in the well (which can cause channeling or otherwise affect cement placement) and Jesse Gagliano's recommendation that a full bottoms-up be performed in order to help alleviate the channeling predicted to occur with only 6 centralizers.[71]

193. BP also decided to use a low volume of cement compared to its previous cement jobs. As United States' expert Glen Benge explained, using a small amount of cement meant

---

[70] The Court finds that using only 6 centralizers did not cause the cement to fail. Nevertheless, BP knew that using only 6 centralizers could lead to channeling and knew or should have known that a CBL would likely reveal channeling if it occurred. That BP knowingly accepted this risk is demonstrated in, among other things, an e-mail on April 16, 2010, between BP engineers Brett Cocales and Brian Morel. When the e-mail was written, BP's John Guide (Wells Team Leader) and Greg Walz (Drilling Engineering Team Leader) had decided to use 6 centralizers because they believed the 15 additional centralizers were a type prone to falling off production casing as it was run through the wellhead, which could cause the casing to become stuck in the middle of the operation. In the e-mail, Mr. Cocales explains the need for centralizers, but ultimately agrees with John Guide's conclusion that using only 6 centralizers was an acceptable risk:

> Even if the hole is perfectly straight, a straight piece of pipe even in tension will not seek the perfect center of the hole unless it has something to centralize it.
>
> ***But, who cares, it's done, end of story, will probably be fine and we'll get a good cement job. I would rather have to squeeze than get stuck above the WH [wellhead].*** So [John] Guide is right on the risk/reward equation.

TREX 1517 at 2 (emphasis added). "Squeeze" refers to a "squeeze job," a term for remedial cement work. If cement fails to achieve zonal isolation and this failure is detected, a squeeze job can cure the situation. Therefore, Mr. Cocales' statement, "would rather have to squeeze than get stuck above the [wellhead]," as well as his agreement with John Guide's risk/reward analysis, reflects his awareness that using too few centralizers could result in a failed cement job.

[71] "Bottoms-up" refers to circulating mud in the well such that mud at the bottom is pumped back to the rig. This has several purposes: remove debris in the well, break the gel strength of mud so it can be displaced, and pump mud from the bottom of the well to the surface so it can be evaluated. According to the United States' expert Glen Benge, the industry standard is to perform at least one full bottoms-up circulation. BP's internal standards required at least two full bottoms-up circulations.

BP decided to not perform a full bottoms-up prior to the cement job because it was concerned about fracturing the formation. While this may have been a legitimate concern, its decision did increase the risk of channeling, among other things. A CBL would have mitigated this increased risk. Consequently, BP's decision to forego the full bottoms-up should have further motivated it to perform the CBL.

that there was almost no room for error with regards to cement placement. Mr. Benge further explained it is never the case that cement is placed precisely where intended. Although BP may have had a justifiable reason for pumping a low volume of cement—and the Court further acknowledges that the amount of cement appears to have met the minimum required by federal regulations—this decision did increase the risk that cement would not be properly placed, which should have further motivated it to run a CBL.

194. The Court recognizes that a CBL is not always run after a cement job. The Court also acknowledges that there were indications that the cement job went as planned, although none of these showed the cement was placed appropriately. As Dr. Beck explained, however, "Successfully placing cement in the annular space to achieve zonal isolation is one of the most unpredictable tasks faced during the drilling of any well, even more so on a well as unstable as was the Macondo. The need to evaluate the effectiveness of the cement placement is obvious."[72] BP had concerns following the attempted float collar conversion and knowingly accepted other risks with its cement job. Indeed, Mark Hafle, BP's senior drilling engineer, told BP investigators that he believed BP was "going to get a shittie cemt [cement] job" due to its decision to use only 6 centralizers.[73]

195. The Court finds that a prudent well operator in BP's position, knowing what BP knew at the time, would have run a CBL, even if its decision tree concluded otherwise and its drilling and cement contractors did not tell it to do so. The fact that BP did not opt for the CBL when the necessary people and equipment were already on location leads the Court to believe

[72] TREX 8140 at 89 (Beck Expert Report).
[73] TREX 4451 at 3 (Interview notes from BP's incident investigation).

BP's decision was primarily driven by a desire to save time and money, rather than ensuring that the well was secure.[74]

196. If BP had performed the CBL, it would have shown that the top of the cement was not where it should have been, which would have given clear indication that the cement was placed improperly and extremely unlikely to provide a barrier to flow. At that point BP could have attempted to remediate the cement job before proceeding any further with the temporary abandonment.[75] Accordingly, the Court finds that BP's decision to not run the CBL was a substantial cause of the blowout, explosion, and oil spill.

viii. M57B Sand

197. Halliburton contended at trial that BP did not properly identify the "uppermost hydrocarbon-bearing zone," and, because of this failure, the as-designed placement and volume of the cement was too low.[76] Halliburton contended that the M57B sand was actually the highest hydrocarbon-bearing zone.

198. The Court is not persuaded by Halliburton's argument.

199. Notably, there is no evidence that any hydrocarbons flowed from M57B when the Macondo well became underbalanced with respect to the M57B zone.

200. The Court doubts that the M57B sand was the "uppermost hydrocarbon-bearing zone." In any respect, the Court is certain that the M57B sand was not a cause of the blowout.

[74] According to BP's Greg Walz, running the CBL would have taken approximately 10-12 hours and would have cost around $128,000 to run plus about $400,000 for Schlumberger's time. Schlumberger estimated the cost of the CBL to be less than $200,000.

[75] *See supra* note 70 (discussing "squeeze job").

[76] Halliburton's argument stems from 30 C.F.R. § 250.421(e), which required that annular cement be placed "500 feet above the uppermost hydrocarbon-bearing zone."

G. Cement Composition

i. Cementing Responsibilities

201. Under the contract between Halliburton and BP, Halliburton was responsible for making recommendations to BP regarding cement slurry design and job execution. Indeed, Halliburton holds itself out as one of the world's leaders in cementing services.

202. However, the Halliburton-BP contract made clear that Halliburton's recommendations "shall be received by [BP] as opinions only, and no warranty expressed or implied shall be inferred by [BP] from such recommendations . . . ."[77] BP's internal documents similarly state:

> Cement design and execution plays a key role in the well construction process and subsequent life of well integrity. A fundamental knowledge of how to design a cement job, coupled with an understanding of how to effectively execute a cement job is a core competency expected of any drilling engineer. ***Reliance on service company expertise is unacceptable.***[78]

203. It was BP's responsibility to review Halliburton's recommendations regarding cement design and procedure, and it was ultimately BP's responsibility to determine whether the slurry design was appropriate for the well. In fact, BP had its own cementing specialist, Erick Cunningham, who reviewed Halliburton's recommendation for the Macondo well.

204. Once BP approved a cement recommendation, Halliburton would mix the cement and pump it down the well. Halliburton was also responsible for testing the cement.

ii. The Cement Design for the Macondo Well

205. BP asked Halliburton employee Jessie Gagliano to recommend a cement design to be pumped into the production interval for the Macondo well. Mr. Gagliano recommended using a "foamed" cement. BP reviewed and accepted this recommendation.

---

[77] TREX 4477 ¶ 29.3.
[78] TREX 37005 at 11.

206. Foamed (or nitrified) cement is created by injecting nitrogen into a base cement slurry while it is being pumped into a well.

207. Foamed cement has a number of characteristics that could be useful for the cement job at Macondo: Injecting nitrogen into cement decreases its density. Thus, a given volume of foamed cement is lighter than the same amount of conventional, unfoamed cement. Lighter cement is useful when there is a concern about damaging fragile rock formations, as there was at Macondo. Also, the amount of nitrogen pumped into the cement can be adjusted as the cement is pumped into the well, providing more control over cement density. Foamed cement is more efficient than unfoamed cement at displacing drilling mud, which can contaminate cement and harm its ability to harden and/or develop strength. Notably, BP's concern about fracturing the formation drove it to limit pump rates during the cement job (as it did during the attempted float collar conversion); thus, the enhanced displacement ability of foamed cement would, at least in theory, mitigate the increased risks of mud contamination. Finally, the pressurized nitrogen bubbles in foamed cement make it more resistant to gas migration as the cement transitions from liquid to solid.

208. However, the benefits of foamed cement are only obtained if the foam is stable. A stable foam cement is one in which nitrogen bubbles remain evenly distributed throughout the slurry after nitrogen has been injected. An unstable cement design is one in which nitrogen migrates or "breaks out" of the slurry and/or does not stay evenly distributed throughout the slurry.

209. The DEEPWATER HORIZON already had some cement on board left over from its previous job at the Kodiak well ("the Kodiak cement"). Halliburton recommended that BP use this cement for the Macondo well. BP accepted this recommendation as well.

210. The evidence reflects that Halliburton did not have a financial incentive to use the leftover Kodiak cement at the Macondo well. BP purchased the Kodiak cement from Halliburton before the HORIZON arrived at Macondo. Mr. Gagliano testified that, if anything, there was financial motivation for Halliburton to sell BP new cement for the Macondo job, rather than use the left over Kodiak cement. Tom Roth, Halliburton's vice president of cementing products service line in 2010, further testified that if the Kodiak cement was not used at Macondo, BP would bear the cost of disposing of the Kodiak cement, as well as the costs associated with purchasing new cement and transporting it to the HORIZON. Mr. Roth also explained that Halliburton's policy was that it did not accept returns of unused cement.

211. Based on the above, the Court finds that BP had a financial incentive to use the leftover Kodiak cement at the Macondo well.

212. The Kodiak cement was not intended to be foamed. The Kodiak cement contained a defoamer, D-Air 3000, which is added to break up air in the cement and give it a smoother density going downhole. A defoamer like D-Air 3000 can destabilize foamed cement.

213. SCR-100, a retarder additive that lengthens the time it takes for cement to thicken in order to allow sufficient time to place the cement, was added to the cement used in the Macondo well. SCR-100 also can destabilize foam cement slurries.

iii. Parties' Arguments Regarding Cement Composition

214. BP contends that the D-Air 3000, and to a lesser extent the SCR-100, caused the foamed cement to become unstable, and this is why the cement failed to achieve zonal isolation.[79] In other words, BP claims the cement recommended by Halliburton was inherently defective.

[79] The PSC, Alabama, and Louisiana, agree with BP that the cement failed because it was inherently unstable, not because it was improperly placed. Transocean also believes the cement was inherently defective, but it also

215. Specifically, BP believes nitrogen broke out of the foamed cement pumped into the annulus. This created pockets in the cement through which hydrocarbons could and did flow. BP further contends that the unfoamed tail cement placed in the shoe track should have created a secondary barrier, but the nitrogen breakout contaminated the unfoamed shoe track cement, or, alternatively, the hydrocarbon influx reached the shoe track before the tail cement had fully transitioned from liquid to solid.

216. BP further claims that Halliburton and Jesse Gagliano knew that defoamers like D-Air 3000 should not be used with foamed cement. BP also contends that Halliburton's pre-incident tests indicated that the cement would be unstable, but Halliburton did not share these results with BP.

217. Halliburton asserts, somewhat half-heartedly, that the foamed cement was stable. Instead, Halliburton's main theme at trial was that any instability was not the reason the cement failed to achieve zonal isolation or that the blowout occurred. This theme manifests itself in various arguments. As discussed above, Halliburton argues that the cement failed because it was pumped through a breach in the shoe track and therefore was not placed across the hydrocarbon bearing sands below the breach point. Alternatively, if the shoe track was not breached, Halliburton contends that BP made several decisions that resulted in channeling, which also would cause the cement job to fail.[80] If the cement was unstable, Halliburton asserts that the result is denser cement, not permeable cement. Halliburton additionally claims that any

---

contends there were a number of other factors for which BP is wholly responsible that also caused the cement to become unstable and/or otherwise fail.

[80] According to Halliburton, these decisions included not using enough centralizers and not performing a full bottoms-up circulation prior to pumping cement. Halliburton also claims that BP's decision to use low pump rates decreased the displacement efficiency of the cement and the spacer pumped ahead of it, leaving mud and/or debris in the annulus. This could lead to channeling, instability, or both.

instability was due to decisions made by BP and/or risks knowingly assumed by BP.[81] Finally, Halliburton points out that it is not uncommon for cement jobs to fail, and when this occurs, remedial cementing work can be performed. Halliburton claims that if BP had not misinterpreted the negative pressure test on April 20, 2010, the cement failure—whatever its cause—could have been fixed and the blowout avoided.

218. The United States and Transocean repeat many of Halliburton's arguments. Either or both of these parties add that (1) if the float collar had converted, which BP failed to verify, the blowout would not have occurred; (2) BP did not allow sufficient time for the cement to set up before conducting the negative pressure test; (3) BP decided not to place a heavy pill in the rat hole (the short length of drilled out hole below the reamer shoe), which permitted the heavy cement in the shoe track to switch places with the lighter drilling mud in the rat hole, contaminating the shoe track cement and providing a pathway for hydrocarbons up the wellbore; (4) BP pumped a lightweight base oil spacer ahead of the cement in an effort to avoid fracturing the well, which likely mixed with the foamed cement and caused it to become unstable; and (5) BP proceeded with the cement job without a successful foam stability test.

iv. <u>The Cement Was Unstable, but Instability Did Not Cause the Blowout</u>

219. The Court has concluded that cement was not properly placed either in the annulus or in the shoe track due to a breach in the shoe track. Given this conclusion, even if the

[81] The synthetic oil based mud used at Macondo can destabilize foamed cement. BP's own in-house cement expert Erick Cunningham warned BP about the risk of using foamed cement in this environment. Halliburton argues that, while it is not uncommon to use foamed cement in such an environment, BP's decision to use low pump rates increased the chances that the cement would be contaminated by synthetic oil based mud. Halliburton also points out that BP decided to increase the concentration of SCR-100 retarder in the cement, and BP understood that this would increase the risk of nitrogen breakout. With respect to D-Air 3000, Halliburton contends that BP knew that the Kodiak cement contained D-Air, and Jesse Gagliano told BP's Mark Hafle and Brian Morel in an e-mail dated December 7, 2009, that D-Air should not be used with foamed cement. Halliburton also claims that the destabilizing effects of D-Air 3000 on foamed cement can be countered by adding surfactant to the cement slurry. Jesse Gagliano used ZoneSealant 2000, a surfactant, with the cement slurry; for that reason Halliburton claims his recommendation to use cement containing D-Air 3000 was not unreasonable.

cement pumped down the well was stable and fully capable of providing a barrier to flow, the cement would not have achieved zonal isolation.

220. The Court will put its conclusion aside for the moment and assume that no breach in the shoe track occurred and the cement was properly placed in the annulus and shoe track.

221. Under this assumption, the Court finds that the cement was unstable and nitrogen broke out of the slurry. The reason this occurred was due to a combination of factors: the defoamer (D-Air 3000) and the increased retarder (SCR-100) in the cement.

222. Using cement with D-Air 3000 certainly increased the risk of instability and nitrogen breakout. Notably, Halliburton's internal procedures advised against this practice. However, the fact that D-Air 3000 was included in the cement did not guarantee that the cement would be unstable. Glen Benge, expert for the United States, testified that the effects of a defoamer like D-Air 3000 can be overcome by adding sufficient amounts of surfactant. Halliburton's Jesse Gagliano added ZoneSealant 2000, a surfactant, to the Kodiak cement. Although most pre-incident tests indicated the cement was unstable, one showed the slurry might be stable (although Mr. Benge stated that he would conduct further testing, given that the resulting cement had higher density than intended). This opens the door to the possibility that D-Air 3000 did not cause instability at Macondo or that it was not the sole cause of instability.

223. As Mr. Benge explained, the inclusion of D-Air 3000 placed heightened importance on cement testing. The Court finds that BP knew that the cement contained D-Air 3000, and BP understood that D-Air 3000 increased the risk of destabilization.[82] The only

[82] A number of communications from Halliburton to BP stated that D-Air 3000 was in the cement. There is much evidence showing that BP was knowledgeable in cement matters; therefore the Court infers that BP likely understood that D-Air 3000 was a defoamer that increased the chance of instability in foamed cement. Furthermore, an e-mail from Jesse Gagliano to Mark Hafle and Brian Morel on December 7, 2009, stated that leftover cement on the MARIANAS (the first rig to drill at Macondo) "cannot be used when foaming because of the D-Air in the blend." TREX 7489.

cement test BP received prior to the incident indicated instability, or at best was inconclusive and needed to be reconducted. Nevertheless, BP moved forward with the cement job despite the absence of a successful foam stability test.

224. Regarding the cement retarder, SCR-100, on April 18 BP directed Halliburton to increase the concentration of retarder from 8 to 9 gallons per 100 sacks of cement.[83] Mr. Benge testified that enough retarder can create instability in foam cement. BP and Halliburton knew that increasing the concentration of retarder, SCR-100, increased the risk of instability and nitrogen breakout. Notably, BP drilling engineer Brian Morel told BP Wells Team Leader John Guide in an e-mail dated April 17, 2010, that he preferred to use 9 gallons of retarder over 8 gallons, "with the added risk of having issues with the nitrogen." [84]

225. As with the D-Air 3000, BP pumped the cement job without having any test results on the cement with the 9 gallon concentration of SCR-100. In fact, Brian Morel noted in his April 17 e-mail with John Guide that "[t]here isn't a compressive strength development yet [on the 9 gallon concentration], so it's hard to ensure we will get what we need until it's done." This further shows that BP understood that testing was essential to mitigate the risks associated with this cement. Nevertheless, BP proceeded to pump the cement without any test results.

226. The Court finds that the D-Air 3000 and the SCR-100 both caused destabilization and nitrogen breakout. BP and Halliburton share blame for this.

227. Halliburton failed its testing obligation. It was slow to perform tests and did not disclose the results of all of the pre-incident tests it did run.

---

[83] Again, BP's concern about fracturing the formation drove this decision. BP wanted to use low pump rates during the cement job in order to avoid damaging the formation, which meant it would take longer for the cement to be pumped into place. BP increased the retarder concentration in order to keep the cement in a liquid state longer and compensate for the added pump time.

[84] At trial Mr. Guide provided a different interpretation of Brian Morel's e-mail than the one given above. The Court finds that Mr. Guide's interpretation lacks credibility.

228. Notably, BP's Brian Morel complained to Mark Hafle on April 18, 2010, that Jesse Gagliano "waited until the last minute" to perform cement testing, which prevented the BP engineering team from "tweak[ing] the slurry to meet our needs." Mr. Morel concluded that "Jesse isn't cutting it any more."[85]

229. Jesse Gagliano knew or should have known that D-Air 3000 and SCR-100 could cause instability. Jesse Gagliano knew or should have known that the results of the pre-incident stability tests were questionable at best and indicated failure at worst. Halliburton should have voiced concern to BP.

230. Halliburton's conduct does not excuse BP's actions. BP understood the importance of foam stability testing and had specifically requested the test results from Gagliano. BP never received test results on the specific cement pumped at Macondo prior to April 20, 2010. The pre-incident test results BP did receive prior to April 20 indicated instability. This should have given BP pause. Instead, BP pressed forward without a successful foam stability test.

231. As mentioned at the outset of this discussion, given the Court's finding that cement was not appropriately placed across all of the hydrocarbon-bearing zones, the Court's findings regarding the instability of the cement makes little difference, at least with respect to identifying the cause of the blowout. No cement, no matter how well designed and stable, will achieve zonal isolation if not properly placed. Furthermore, assuming the cement was properly placed, the Court is not convinced that the tail cement in the shoe track would have failed to provide a barrier to hydrocarbon flow, as BP's theory requires.

[85] TREX 1396.

232. Therefore, the Court ultimately concludes that while the foamed cement was unstable, this was not a cause of the blowout. Improper placement of the cement was the reason the production casing cement job failed to achieve zonal isolation, which led to the blowout.

H. Pressure Integrity Testing

i. The Positive Pressure Test

233. Pumping the production casing cement concluded around 12:30 a.m. on April 19, 2010.

234. Between 10:55 a.m. and noon on April 20, 2010, the rig crew conducted a positive pressure test. This test is intended to verify that the well casing is intact and does not leak. To perform this test, the blind shear rams in the BOP were closed.[86] Additional fluid was then pumped into the well below the blind shear rams, which raised the pressure in the well. If the wellbore holds this pressure, it indicates the casing has integrity. If pressure begins to decline, it indicates fluid is leaking out of the well, possibly due to a breach or gap in the casing. The positive pressure test was performed in two stages: a low-pressure test and a high-pressure test. The wellbore held 250 psi for 5 minutes and then 2680 psi for 30 minutes. The test was deemed successful.

235. Notably, the positive pressure test did not test whether the float collar converted, the integrity of the casing below the float collar (i.e., the shoe track), or the integrity of the cement placed in the shoe track or in the annulus. This is because a cement displacement wiper plug that had been placed on top of the float collar at the end of the cementing operation isolated the float collar, shoe track, and annulus from the positive pressure test. Thus, a breach in the shoe track would not be revealed by the positive pressure test.

[86] The blind shear rams are one of the sealing elements in the BOP. *See infra* Part III.J.i. The drill pipe was not in the BOP when the blind shear rams were closed for the positive pressure test, thus, the rams did not have to shear through pipe at this time. They merely closed on themselves.

ii. The Negative Pressure Test

236. Although MMS regulations at the time did not explicitly require a negative pressure test, no party disputes that it is a safety-critical test. In the words of Dr. Beck, "The negative pressure test is the most critical test that is run prior to removing the blowout preventer."[87]

237. The negative pressure test was intended to simulate the hydrostatic condition on the well after temporary abandonment; i.e., after the HORIZON departed along with its BOP, the riser, and the heavy drilling mud in the riser and upper well casing. The goal of the test is to confirm the integrity of the entire system, including the casing, cement outside the casing, and cement in the shoe track.

238. During the test, some of the mud is displaced with a lighter fluid such that the well becomes underbalanced; i.e., the pore pressure in the formation is greater than the pressure inside the casing.[88] Once the appropriate amount of mud has been displaced, any built up pressure is bled out of the well casing. The negative pressure test can then be accomplished by monitoring pressure or by monitoring for flow from the well to the rig. Under the pressure method, if pressure remains at zero, it indicates that the well is secure. If pressure increases, it indicates that something, such as hydrocarbons, is flowing into what should be a closed system. Under the flow method, one or more apertures at the top of the system on the rig are left open after pressure is bled to zero. If fluid thereafter flows out of the pipe opening(s), it indicates the well is not secure; something is flowing into the well that is forcing fluid out at the top. If the

[87] TREX 8140 at 93 (Beck Expert Report).

[88] A variety of fluids can be used to displace the heavier mud. In the case of Macondo, seawater was used. The amount of drilling fluid that is displaced for a negative pressure test varies as well. The test at Macondo intended that the drilling mud from the top of the BOP to a depth of 8,367 feet (3,367 feet below the seafloor) would be displaced to seawater. Mud would still occupy the riser above the BOP and the well below 8,367 feet.

negative pressure test indicates that the well is not secure, the well can be kept under control by adding mud and regaining hydrostatic overbalance, and/or by using the BOP to shut in the well.

239. All of the experts agreed that the criteria for a successful negative pressure test are easily understood in the drilling industry: once the pressure is bled down to zero, the pressure must remain at zero if the test is conducted by monitoring pressure gauges. If the test is a flow check, then no fluids should flow from the open aperture. If there is either pressure or flow, then the test has failed. In the words of Richard Heenan, expert witness for the United States, this is a "pass-fail" test. As Transocean expert Calvin Barnhill testified, "This isn't baseball, the tie doesn't go to the runner, the tie goes to the failed test. So if it's good, it's good; if it's inconclusive or if it's bad, it's not a good test."[89]

[89] Transcript at 4336:17-4337:5 (Barnhill).

240. Figure 7 illustrates a ***successful*** negative pressure test using the pressure method. Note that the pressure gauges on the drill pipe and the kill line[90] indicate zero pressure.

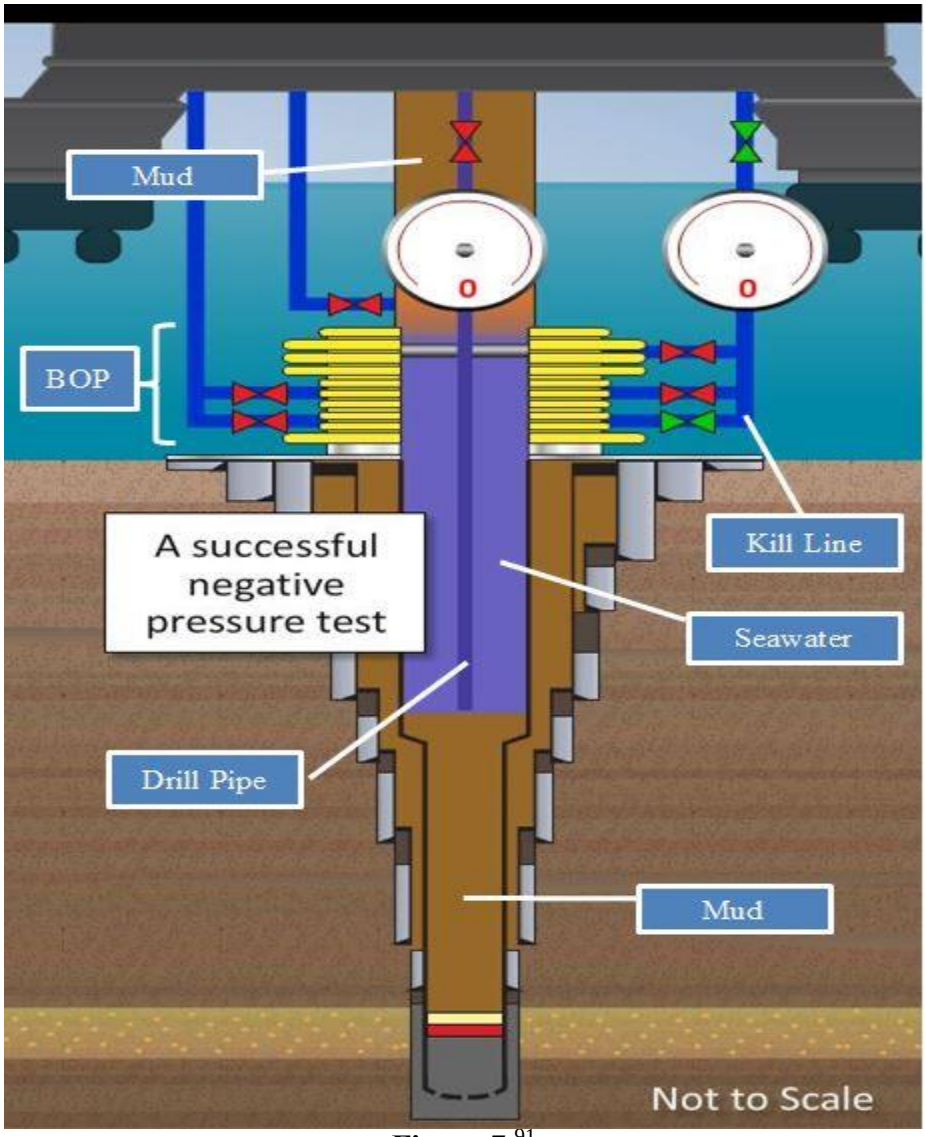

Figure 7 [91]

241. The negative pressure test at Macondo, which should have been completed in a relatively short time, instead was conducted over three hours from 4:55 p.m. to 7:55 p.m. on April 20, 2010.

[90] The kill line is a pipe that runs from the rig to the BOP, outside the riser. Like the drill pipe, fluids can be pumped down the kill line or they can flow up it.

[91] Image from D-3561 (negative pressure test animation) (some labels added).

242. The reason for the unusually long time was that anomalous pressure readings and other phenomena occurred during the test. Rather than discuss each anomaly, the Court will focus on the critical and overriding aspect of the negative pressure test. Accordingly, with respect to drill pipe pressures and various other data relevant to the three hours during which the negative pressure test was performed, the data set out in BP's Accident Investigation Report shall be generally accepted for purposes of these findings.[92]

243. The negative pressure test was initially conducted by monitoring pressure on the drill pipe, which was the normal and preferred practice for the Transocean drill crew. By approximately 5:30 p.m., there were significant anomalies that should have indicated that the well potentially was in communication with the reservoir, or at least that the test had failed and needed to be restarted. Instead of declaring the test a failure, however, the BP Well Site Leaders concluded that the test needed to be conducted on the kill line, rather than the drill pipe.[93] Accordingly, BP Well Site Leader Don Vidrine ordered the Transocean drill crew to shift the test to the kill line and monitor for flow.

244. Although the negative pressure test was "moved" to the kill line, the Transocean drill crew and the BP Well Site Leader continued to monitor pressure readings on the drill pipe.

245. In the process of shifting the test to the kill line, pressure that had built up on the drill pipe was bled to near 0. Between 6:00 p.m. and 6:35 p.m., the drill pipe pressure steadily rose to 1,400 psi., where it remained until the negative pressure test concluded around 7:55 p.m.

---

[92] TREX 00001 at 24-25 and 88 at Fig. 4. *See also* Transcript at 2067:2-2087:22 (Heenan).

[93] BP asserts that the reason the negative pressure test was shifted to the kill line was because the procedure submitted to and approved by the MMS stated the kill line would be used. At least one expert contested whether this was actually the case. In light of the errors regarding the interpretation of the negative pressure test, whether or not the permit required the negative pressure test to be performed on the kill line is a fairly insignificant point. The Court does find, however, that had the test continued on the drill pipe, the test would not have been misinterpreted.

246. Around 7:07 p.m., the kill line was opened at the surface to bleed off some pressure. The kill was then left open and monitored for any flow at the surface. No fluid was observed flowing from the kill line for thirty minutes. There was also no pressure on the kill line.

247. Around 7:55 p.m. the BP Well Site Leaders declared the negative pressure test a success based on the lack of flow from the kill line for thirty minutes. The Transocean drill crew agreed with this conclusion. However, 1,400 psi pressure remained on the drill pipe at this time.

248. The one thing the 1,400 psi reading absolutely precluded was a determination that the negative pressure test was successful or that the well was secure. The 1,400 psi indicated that the well was in communication with the formation. The negative test should have been declared a failure.

249. Furthermore, "[w]ith the difficulties of converting the float collar and potential damage to the shoe track, there was ample reason to expect well integrity to be suspect, which should have heightened attention even beyond the usual 'high alert' status required by a negative pressure test."[94]

250. The lack of flow from and pressure on the kill line was obviously a false reading. Something had blocked the kill line such that the pressure that existed in the well and registered on the drill pipe did not affect any fluid in the kill line nor did it register on the kill line's pressure sensor.

251. Having declared the negative pressure test successful, BP Well Site Leader Don Vidrine instructed the Transocean drill crew to proceed with displacing the remaining mud in the riser above the BOP with seawater. The drill crew first opened the lower annular preventer in the BOP, which had been closed for the negative pressure test in order to isolate the mud in the

[94] TREX 8140 at 97 (Beck Expert Report).

riser from the well. This increased the hydrostatic pressure in the well, returning it to a state of overbalance. The drill crew then proceeded to displace all of the mud above 8,367 feet with seawater. At this point, the drilling mud provided the only barrier to flow. Consequently, it was only a matter of time before the well would again become underbalanced. As discussed later, this would lead to a kick, then a blowout, and, once gas from the well found an ignition source on the rig, the first explosion.

252. If the negative pressure test had been correctly interpreted, the blowout, explosion, fire, and oil spill would have been averted. Consequently, the Court finds that the misinterpretation of the negative pressure test was a substantial cause of the blowout, explosion, fire, and oil spill.

iii. Responsibility for Misinterpretation of the Negative Pressure Test

253. BP was responsible for designing the procedures for the negative pressure test, supervising the test, and ultimately determining whether the test was a success.

254. The Transocean drill crew actually conducted the test and was primarily responsible for monitoring the well at all times. The Transocean drill crew also had authority to stop the work if they had concerns about the negative pressure test or felt that it was not successful. BP could not force the Transocean drill crew to proceed.

255. Randy Ezell, Transocean's senior toolpusher on the HORIZON (who was off duty at the time of the blowout) testified that it was typical for the on-duty BP Well Site Leader and the on-duty Transocean toolpusher to discuss the results of a negative pressure test, but that "it was BP's well, and he [the BP Well Site Leader] had the final say [as to whether the negative

pressure test was successful or not]. . . . He [the BP Well Site Leader] had the ultimate decision, but we had stop-work authority if we saw something wasn't correct."[95]

256. The evidence reflects that both the BP Well Site Leaders and the Transocean drill crew were aware of the anomalies that occurred during the negative pressure test, including the 1,400 psi pressure on the drill pipe, and that these anomalies were discussed between and among the BP Well Site Leaders and the Transocean drill crew. Ultimately, however, both the BP Well Site Leaders and the Transocean drill crew agreed that, based on the lack of flow from the kill line, the negative pressure test was successful and the well was secure.

257. The BP Well Site Leaders and the Transocean drill crew incorrectly attributed the pressure on the drill pipe to a so-called "bladder effect." As explained later, this phenomenon is not known to exist in the context of negative pressure tests, and no party has advanced the "bladder effect" as a plausible explanation for the pressure anomaly during the negative pressure test.

258. Accordingly, both BP and Transocean are responsible for the misinterpretation of the negative pressure test.

259. Notably, BP Exploration and Production, Inc. and Transocean Deepwater Inc. admitted as much when they pled guilty to certain crimes arising from the incident.

260. BP Exploration and Production, Inc. admitted:

> The [BP] Well Site Leaders were responsible for supervising the negative pressure test conducted by Transocean. . . .
>
> [T]he negative pressure test performed on the Macondo Well provided multiple indications that the wellbore was not secure. BP's Well Site Leaders negligently supervised the negative pressure test during this time, failed to alert engineers on the shore of these indications, and along with others, ultimately deemed the negative pressure test a success, all in violation of the applicable duty of care. . . .

[95] Transcript at 1677-78 (Ezell).

> BP's negligent conduct, among others, was a proximate cause of the deaths of eleven men and pollution resulting from the Macondo Well blowout.[96]

261. Transocean Deepwater Inc. admitted:

> TRANSCOEAN, together with BP, conducted negative testing on the Macondo well. . . .
>
> . . . Both BP and defendant TRANSOCEAN continued to observe abnormal pressure on the drill pipe while monitoring the kill line for flow. . . . BP and defendant TRANSOCEAN did not take further steps to investigate the source of the abnormal drill pipe pressure, which was neither correctly explained nor remediated.
>
> . . .
>
> Defendant TRANSOCEAN's conduct violated its duty to exercise well control in accordance with the standard of care applicable in the deepwater oil exploration industry.
>
> Defendant TRANSOCEAN's negligent conduct, together with the negligent conduct of others, was a proximate cause of the blowout and the discharge of certain quantities of oil and natural gas from the Macondo well into the Gulf of Mexico.[97]

262. Although both are to blame for the misinterpretation of the negative pressure test, the Court finds BP is more culpable than Transocean.

263. As already noted, BP was ultimately responsible for declaring the negative pressure test a success or failure.

264. BP had multiple onshore technical personnel at the Well Site Leaders' disposal to assist in resolving issues with the negative pressure test, and, in fact, Well Site Leader Vidrine discussed the negative pressure test with one of these onshore engineers.

265. Between 8:52 p.m. and 9:02 p.m.—after the negative pressure test concluded but before the blowout—Well Site Leader Vidrine (on the rig) and BP Senior Engineer Mark Hafle

---

[96] TREX 52673 (Guilty Plea Agreement, Exhibit A, *United States v. BP Exploration & Production, Inc.*, No.12-cr-00929 (E.D. La. Nov. 15, 2012)).

[97] TREX 52676 (Guilty Plea Agreement, Exhibit A, *United States v. Transocean Deepwater Inc.*, No. 13-cr-001 (E.D. La. Jan. 3, 2013)).

(in Houston) had a phone conversation during which they discussed, among other things, the negative pressure test.

266. Neither Vidrine nor Hafle testified at trial. However, on July 8, 2010, in the presence of his own attorneys and BP in-house counsel, Hafle was interviewed by members of the BP incident investigation team. The interview notes state in relevant part:

> Don Vidrine called Mark [Hafle] at 8:52 pm to talk about how to test the surface plug and whether they should apply a pressure test or a weight test. Mark noted that Don also talked to him about the negative tests. ***Vidrine told Mark that the crew had zero pressure on the kill line, but that they still had pressure on the drill pipe. Mark said he told Don that you can't have pressure on the drill pipe and zero pressure on the kill line in a test that's properly lined up.*** Mark said that he told Don he might consider whether he had trapped pressure in the line or perhaps he didn't have a valve properly lined up. Don told Mark that he was fully satisfied that the rig crew had performed a successful negative test. Mark said he didn't have the full context for what had transpired during the tests and it wasn't clear to him whether Don was talking about the first or second negative tests. Don told him he watched the kill line for 30 minutes and didn't see a drip come out of it; and so Mark assumed that Don had concluded that it was not a problem.[98]

267. The foregoing document sets forth an exchange between the most senior BP representative on the rig and BP's senior drilling engineer in Houston. The document and related testimony establish that Mr. Hafle understood that the negative pressure test could not be considered a success given the two inconsistent pressures on the kill line and drill pipe. As the United States' expert described it, "someone on the shore side of BP said, 'This isn't right.'"[99]

268. Mark Hafle not only recognized that the test could not be considered a success, he was advising Vidrine how to troubleshoot the problem: "Mark said that he told Don he might consider whether he had trapped pressure in the line or perhaps he didn't have a valve properly lined up."

[98] TREX 296 at 6 (emphasis added).
[99] Transcript at 2094:15-2095:5 (Heenan).

269. The interview notes also establish that BP's Senior Drilling Engineer expressly told Vidrine, the same Well Site Leader who had approved the negative pressure test only an hour before, that the test could not be considered a success given the two inconsistent pressures on the kill line and drill pipe.

270. The time of the call is significant. BP contends that hydrocarbons entered the wellbore at 8:52 p.m. This means that the call between Vidrine and Hafle commenced at the same time that the well went underbalanced and began to flow. The conversation ended at 9:02 p.m. One of BP's experts stated that hydrocarbons did not pass the BOP and enter the riser until approximately 9:38 p.m. This means there were 36 minutes after the phone call to close in the well and prevent hydrocarbons from getting above the BOP.

271. If anyone at BP had instructed Transocean's drill crew to re-run the negative pressure test immediately after the call concluded at 9:02, or even within the next half hour, the drill crew's first step would have been to stop the mud pumps and close the annular preventer in the BOP. These actions alone would have secured the well and prevented the kick from escalating into a blowout. Upon determining that the well was not secure, the drill crew would have been in a position to circulate the well back to drilling mud and return it to state of overbalance. The blowout would have been avoided.

272. Halliburton's expert, Dr. Beck, testified that Hafle should have stopped operations upon hearing about the 1,400 psi pressure on the drill pipe.[100]

273. BP contends that Mark Hafle was not sure if Don Vidrine, in describing the different pressures on the drill pipe and the kill line, was describing the initial test on the drill pipe or the later test on the kill line, based on the following excerpt from the interview notes:

[100] Transcript at 7208:13-18 (Beck).

> Mark said he didn't have the full context for what had transpired during the tests and it wasn't clear to him whether Don was talking about the first or second negative tests. Don told him he watched the kill line for 30 minutes and didn't see a drip come out of it; and so Mark assumed that Don had concluded that it was not a problem.

274. Even if Hafle did not have the full context as to which negative pressure test the Well Site Leader was referring to, the Court credits the common sense testimony of witnesses who stated that if the Senior Drilling Engineer did not have all the information needed, then he needed to get that information in order to satisfy himself. As Mr. Heenan explained, if Hafle lacked context, then he only needed to ask Vidrine which test he was talking about. Hafle also could have looked at the data that was running on his desk computer in Houston, which could display pressure and flow data from the well in real time or as it occurred during the negative pressure test.[101]

275. Furthermore, it is inexplicable that Hafle did not take further action given that he believed the design of the cement job was "on [the] ragged edge" and that BP would get a "shittie" cement job.[102] Mr. Hafle also knew of the problems BP encountered with converting the float collar and the anomalous data that followed.

276. But even if Hafle lacked context, Don Vidrine did not. The Well Site Leader already had firsthand knowledge of the negative pressure test that he himself approved an hour before. Furthermore, Vidrine stated in post-incident interviews that the negative pressure test results looked "squirrely" to him and that he was "concerned" about the pressure on the drill pipe.[103] If these statements accurately represent Vidrine's beliefs on April 20, 2010, then when Hafle provided the information Vidrine already was obligated to know as a matter of fundamental well control—"you can't have pressure on the drill pipe and zero pressure on the

[101] Transcript at 2100:2-2001:8 (Heenan); *see also* Transcript at 4347:9-22 (Barnhill).
[102] TREX 37031 at 94; 4451 at 3 (Interview notes from BP's incident investigation).
[103] TREX 49 at 2, 3.

kill line in a test that's properly lined up"—Vidrine should not have hesitated to order the Transocean drill crew to stop the displacement, shut in the well, and redo the negative pressure test.

277. However, Vidrine did not order another negative pressure test after the phone call. Nor does any evidence indicate that Vidrine discussed the phone call with the Transocean crew. Instead, at 9:14 p.m. Mr. Vidrine affirmatively ordered that the pumps—which had stopped at 9:08 p.m. so a sheen test could be performed—be restarted and that displacement continue. He did this with the critical information the BP Senior Drilling Engineer had provided to him only minutes earlier.

278. It is also noted that BP's Accident Investigation Report did not mention the 8:52 p.m. phone call between Vidrine and Hafle, and in fact states, "The investigation team has found no evidence that the rig crew or well site leaders consulted anyone outside their team about the pressure abnormality."[104] This statement is patently false. As reflected in the BP investigators' notes and as members of the investigation team admitted at trial, the BP investigation team was aware of the 8:52 p.m. phone call.

279. The person in charge of BP's investigation and report, Mark Bly, testified that the reason the report did not mention the 8:52 phone call is because the call was "after the fact, after the test had been accepted."[105] Steve Robinson, a member of the BP investigation team, similarly testified that the call was not included in BP's report because he "didn't see it as being causal because the interpretation of the test wasn't done in this call."[106] As discussed above, however, there were 36 minutes between the time the phone call ended and hydrocarbons entered the riser. That was plenty of time for Vidrine or Hafle to stop the displacement and order that the

[104] TREX 1 at 89.
[105] Transcript at 1343:25 (Bly)
[106] Transcript at 7939:14-19 (Robinson).

negative test be performed again. The opportunity to avoid disaster had not yet passed. The explanations provided by Messrs. Bly and Robinson are untenable.

280. The Court infers that BP's investigation team recognized the importance of the 8:52 p.m. phone call and chose to omit it from the BP Accident Investigation Report to avoid casting further blame on BP.

281. With respect to the Transocean drill crew, the Court finds that they were attentive to the well during the negative pressure test and took the procedure seriously. BP suggests otherwise based on comments Vidrine made during interviews with BP investigators following the incident.[107] The Court gives little weight to these statements. Witnesses, including BP's Lee Lambert, testified that the Transocean drill crew worked seriously on the negative pressure test and had detailed discussions about the pressure anomalies as they tried to resolve them. Data from the well confirms that the crew took actions to investigate and troubleshoot some of the anomalies they encountered during this time.

282. Finally, the Court finds that BP's conduct with respect to the negative pressure test violated several MMS regulations, including 30 C.F.R. § 107(a) ("You must protect health, safety, property, and the environment by . . . [p]erforming all operations in a safe and workmanlike manner"), 30 C.F.R. § 250.300 (a) ("The lessee shall not create conditions that will pose unreasonable risk to public health, life, property, aquatic life, wildlife, recreation, navigation, commercial fishing, or other uses of the ocean."), and 30 C.F.R. § 250.401(a) ("You must take necessary precaution to keep wells under control at all times. You must: Use the best available and safest drilling technology to monitor and evaluate well conditions and to minimize

[107] *See* TREX 00003A at 2 (interview notes) ("TO [Transocean] had dismissed drill pipe pressure as anything serious [;] somewhat joked about my [Vidrine's] concern over drill pipe – they found it humorous that I continued talking about [it]").

the potential for the well to flow or kick."). Transocean's conduct also constituted a violation of 30 C.F.R. § 250.401(a); the other regulations do not apply to contractors.

iv. The "Bladder Effect"

283. As mentioned, the BP Well Site Leaders and the Transocean drill crew attributed the anomalous pressure on the drill pipe during the negative pressure test to a "bladder effect."

284. Not a single witness had ever heard of the "bladder effect" as something that would justify interpreting the negative pressure test as successful. No party has contended that the "bladder effect" provided a plausible explanation for the 1,400 psi pressure on the drill pipe.

285. BP's Accident Investigation Report stated that "the investigation team could find no evidence that such a phenomenon is possible, leaving the 1,400 psi unexplained unless it was caused by pressure from the reservoir."[108]

286. Five days after the blowout, Well Site Leader Bob Kaluza sent an e-mail to BP personnel that provided a detailed explanation as to how the "bladder effect" could have created the anomalous pressure reading. Patrick O'Byran, BP's Vice President of Drilling and Completions for the Gulf of Mexico at the time (and who, coincidentally, was on the HORIZON when the explosions occurred), responded to this explanation by typing:

??? . . .

followed by roughly another 500 question marks. During trial Mr. O'Byran explained, "[A]s I sit here today, I don't understand what Mr. Kaluza was trying to define, and this [the question-mark-only response] is what we have in front of us today."[109]

287. There is some evidence that the "bladder effect" theory may have originated with the Transocean drill crew. At trial Lee Lambert, a BP Well Site Leader trainee who was on the

[108] TREX 1 at 89.
[109] Transcript at 9333:11-13 (O'Bryan).

rig on April 20, 2010, testified that Jason Anderson, the Transocean toolpusher on duty at the time of the negative pressure test, first provided the explanation that would later be known as the "bladder effect," although it may not yet have acquired that name. Notes taken by BP investigators during their interviews with Well Site Leaders Don Vidrine and Bob Kaluza also reflect that Mr. Anderson first proposed the "bladder effect" theory.

288. Unfortunately, Jason Anderson and the other members of the Transocean drill crew who were in the drill shack at the time did not survive the explosion, and therefore the Court does not have the benefit of their testimony.

289. Nevertheless, there are reasons to question whether the "bladder effect" originated with Jason Anderson, but the Court need not discuss them at length. Even if the "bladder effect" theory originated with a Transocean employee, the BP Well Site Leaders—the ones ultimately responsible for determining the outcome of the negative pressure test—accepted it as a viable explanation for the 1,400 psi pressure on the drill pipe. Notably, Lee Lambert testified that after Mr. Anderson described the phenomenon, Lambert asked Well Site Leader Kaluza if the phenomenon was possible, who said it was.[110] And as mentioned above, Mr. Kaluza gave a detailed explanation after the incident of how the "bladder effect" could have caused the pressure anomaly. Kaluza's explanation did not attribute Jason Anderson as the source of the "bladder effect theory" and was more detailed than the explanation Anderson allegedly provided to Lee Lambert. This leads the Court to infer that the theory more than likely originated with Mr. Kaluza.

290. The BP Well Site Leaders should have had the experience and knowledge to understand the "bladder effect" was not a viable explanation, even if it did come from the

[110] Transcript at 8303:19-25 (Lambert).

Transocean drill crew. The Court agrees with the opinion of Transocean's expert, Calvin Barnhill, on this point:

> If the well site leaders' versions [regarding the origin of the "bladder effect"] are correct this illustrates too much reliance on the drill crew in my opinion. The drill crew, while having training in their respective jobs and having work experience on some of the most technically advanced wells ever drilled, were not formally trained engineers and did not have a complete knowledge of all facts. The BP Well Site Leaders had multiple onshore BP technical personnel at their disposal to assist them in resolving the issue. The BP personnel, both on the rig and onshore, were in a better position, with more data, to understand all the events and make the necessary decisions to safely TA [temporarily abandon] the Macondo Well. If there [were] any questions[,] the BP well site leaders could have, should have and ultimately did get BP onshore involved.[111]

291. Neither Transocean nor BP should have relied on the "bladder effect" to justify the negative pressure test. Even if the bladder effect originated with the Transocean drill crew, it does not lessen BP's culpability.

v. LCM Spacer

292. The Court finds that the reason for the false reading from the kill line is because BP decided, unreasonably, to use left-over lost circulation material ("LCM") as a spacer between the mud and seawater during the displacement and negative pressure test.[112]

293. LCM is normally used to plug fractured formations. In fact, LCMs were used to strengthen the wellbore at Macondo following the lost returns incident on April 4, 2010.[113]

294. BP's expert, Morten Emilsen, testified that the LCM-spacer was a very viscous fluid, meaning it was thick and did not flow easily, similar to tar or molasses.

295. The Court finds that the LCM-spacer likely clogged the kill line during the negative pressure test, causing the zero pressure/no flow readings.

---

[111] TREX 7676 at 40 (Barnhill Expert Report).

[112] Figure 8, *infra*, generally depicts how a spacer was used to separate the seawater from the mud during the displacement.

[113] *See supra* Part III.C.ii.

296. Using LCM as a spacer was uncommon. In fact, none of the drilling experts and practitioners who testified in this case had ever seen or heard of LCM being used in this manner.

297. Although M-I, the drilling fluids contractor, suggested using the left-over LCM as a spacer, it was ultimately BP who decided to do so. Notably, M-I's Doyle Maxie pointed out to BP that there was a risk the LCM-spacer might plug small restrictions in the well.[114]

298. The Court further finds that BP decided to use the LCM as a spacer to avoid the cost of transporting and disposing of the LCM, as well as the cost of creating an entirely new spacer from scratch. LCM had been stockpiled on the HORIZON in response to the lost return events that occurred while drilling the well. Unused LCM typically must be transported to shore for disposal as a hazardous waste. However, BP believed, rightly or wrongly, that if the LCM had been used in the well, they simply could be dumped overboard without violating any environmental laws. The Court agrees with the opinion of Dr. Beck that BP's decision to use LCM as a spacer was not driven by any operational motive, but rather to save time and money.[115]

299. BP's decision to use the LCM as a spacer was unreasonable and led to the misinterpretation of the negative pressure test. This is another reason why BP's culpability with respect to the negative pressure test is greater than Transocean's.

[114] TREX 7614 (E-mail from Doyle Maxie to John LeBleu, Brett Cocales, Brian Morel, and Mark Hafle dated April 16, 2010).

[115] TREX 8140 at 102 (Beck Expert Report).

I. Well Control During Final Displacement and the Blowout

i. Well Control Responsibilities

300. Federal regulations required that BP, as the lessee and operator, "must protect health, safety, property, and the environment by . . . [p]erforming all operations in a safe and workmanlike manner."[116] Federal regulations also required that BP, as well as its contractors,:

> [M]ust take necessary precautions to keep wells under control at all times. [BP and its contractors] must:
>
> (a) Use the best available and safest drilling technology to monitor and evaluate well conditions and to minimize the potential for the well to flow or kick;
>
> (b) Have a person onsite during drilling operations who represents your interests and can fulfill your responsibilities;
>
> (c) Ensure that the toolpusher, operator's representative, or a member of the drilling crew maintains continuous surveillance on the rig floor from the beginning of drilling operations until the well is completed or abandoned . . . ; [and]
>
> (e) Use and maintain equipment and materials necessary to ensure the safety and protection of personnel, equipment, natural resources, and the environment.[117]

301. Under its contract with BP, Transocean had primary responsibility for monitoring the well at all times. The Transocean employee specifically tasked with monitoring the well was the driller.

302. Transocean was also responsible for activating the BOP in response to a well control event and activating the diverter system to address any hydrocarbons that may enter the riser. No other entity on the DEEPWATER HORIZON was responsible for the BOP or the diverter system in terms of their activation in response to a well control event.

303. Under Halliburton's contract with BP, it provided mudloggers who acted as a "second pair of eyes" on the well. The mudlogger would monitor real time data relating to the

[116] 30 C.F.R. § 250.107.
[117] 30 C.F.R. § 250.401.

well's condition. If a mudlogger observed any anomalies, he or she was obligated to report them to the Transocean drill crew. The mudloggers did not have any responsibility or ability to activate the BOP.

304. The Halliburton mudloggers monitored well data from a building on the HORIZON commonly referred to as the "mud shack." Halliburton used a program called InSite to provide well data. Halliburton's InSite data could also be viewed in real time by the Transocean drill crew, the BP Well Site Leaders, and BP engineers in Houston.

305. The Transocean drill crew performed their well control functions, including monitoring the well, in the "drill shack" located on the drill floor. The drill crew could monitor the well with either Halliburton's InSite program, or Transocean's program called "HiTech." Transocean's HiTech data could also be viewed by the BP Well Site Leaders. It was not available to the Halliburton mudloggers, nor was it sent to shore. [118]

306. BP's Well Site Leaders could view both the Transocean and Halliburton data from their office and personal quarters. As mentioned, the Halliburton data was also sent to and viewed by BP engineers onshore.

ii. 8:00 p.m.: Final Displacement Commences

307. As mentioned above, some of the heavy drilling mud was displaced to seawater during the negative pressure test. At the conclusion of the negative pressure test, the fluids in the drill pipe/riser/BOP/well were generally arranged as follows: The drill pipe, which extended from the rig to a depth of 8,367 feet was filled with seawater. The riser annulus (i.e., the space between the drill pipe and the riser, from the rig to the top of the BOP) was filled with mud and spacer; the mud was above the spacer. From the BOP down to a depth of 8,367 feet (i.e., the

[118] Because Transocean's HiTech data was not transmitted onshore, it was lost with the HORIZON. Consequently, much of what is known about the accident comes from Halliburton's InSite data.

upper 3,367 feet of the well) was seawater. The rest of the well below 8,367 was filled with mud.[119]

308. After BP Well Site Leader Vidrine declared the negative pressure test a success at 7:55 p.m., he instructed the Transocean drill crew to displace the remaining mud and spacer above 8,367 feet to seawater, per BP's temporary abandonment procedure. It was intended that the mud below 8,367 feet would remain in the well.

309. Figure 8 illustrates the ***planned*** displacement to seawater following the negative pressure test. Fluid locations are not exact.

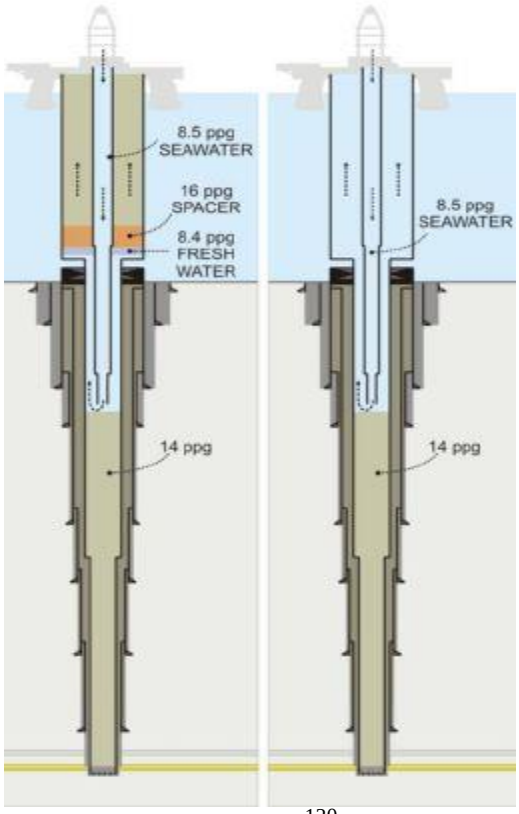

Figure 8 [120]

[119] This description is not exact. For example, while the mud and spacer are described as being above the BOP, some of the spacer was also inside the BOP. Where two fluids met, mixing likely occurred to some extent. This description also does not list all of the fluids that were in the well. For example, freshwater was pumped between the spacer and seawater, but is not listed. The hydrocarbons that would have entered the well during the negative pressure test also are not listed.

[120] TREX 8173 at 55 (Bourgoyne Expert Report).

310. Around 8:00 p.m., the drill crew opened the lower annular preventer, which had been closed for the negative pressure test to isolate the mud in the riser from the BOP and well. This increased the hydrostatic pressure in the well, temporarily returning it to an overbalanced state. The Transocean drill crew then pumped seawater down the drill pipe, which pushed the spacer and mud up and out the riser. As lighter seawater displaced the heavier fluids, the hydrostatic pressure in the well decreased.

311. At around 8:52 the well became underbalanced again, allowing hydrocarbons to begin flowing into the well bore. As displacement continued, the well became further underbalanced.

iii. 9:01-9:08: First Anomaly

312. Between 9:01 and 9:08, the drill pipe pressure increased by 100 psi while the pumps ran at a constant rate. Drill pipe pressure should have been decreasing at this time. When viewed after the fact, this was the first indication (outside of the negative pressure test) that the well was in communication with the reservoir that could have been seen by someone on the rig.

313. There is no evidence that anyone noticed this increase when it occurred or, if they did, recognized it as a kick indicator.

314. The Court understands that it is easier to interpret well data after the fact. For example, an investigator's analysis of data from 9:08 p.m. is necessarily informed by his knowledge that explosions occurred about forty minutes later. Obviously, the people who viewed this data in real time as it was recorded on April 20, 2010, did not have this benefit. Furthermore, the investigator deals with data that is static and has the luxury of time to analyze it. Those on the rig would have dealt with data that scrolled steadily across a computer screen. Interpretations had to be made quickly in order to permit any kind of meaningful responsive action. Thus, it is understandable that even a reasonable and prudent driller, for example, might

overlook or dismiss a slight fluctuation of pressure, whereas an investigator after the fact might view the same data point as a tell-tale indicator of a kick.

315. The 100 psi increase in pressure over seven minutes between 9:01 and 9:08 would have appeared very subtle at the time. Also, an increase in pressure is not necessarily indicative of a kick (although in this case it was). Notably, the International Association of Drilling Contractors states that a ***decrease*** in drill pipe pressure is a kick indicator, not an increase.

316. The Court finds that a properly trained, reasonable, and prudent person monitoring the well would not necessarily have noticed the increase in pressure between 9:01 and 9:08 as an indicator that the well was taking a kick.

iv. 9:08-9:14: The Sheen Test and the Second Anomaly

317. As mud was displaced from the riser it was routed to one or more tanks or pits on the HORIZON. Once all of the mud had been displaced from the riser, displacement paused for a sheen test. The purpose of the sheen test was to determine if the spacer that followed the mud could be pumped overboard into the Gulf of Mexico without violating any environmental laws.

318. Between 9:08 and 9:14 the pumps were shut down for the sheen test. During this time, the drill pipe pressure increased by 246 psi. While it might not have been unusual for pressure to remain once the pumps stopped, it should not have increased. Data also indicates that it took longer than usual for fluid to stop flowing out of the well after the pumps were shut down. When viewed after the fact, these anomalies indicated hydrocarbons were flowing into the well.

319. There is no evidence that anyone noticed these anomalies when they occurred or, if they did, recognized them as indicating a kick.

320. It is debatable whether the anomalies between 9:08 and 9:14 should have been noticed and investigated as potential kick indicators. The pressure increase would have appeared subtle, but not as subtle as the earlier 100 psi increase. Although flow continued after the pumps

were shut down at 9:08, it soon began decreasing rapidly and had ceased entirely by 9:10. There is some evidence that a flow check was conducted during the sheen test (i.e., while the pumps were off), but no flow was seen coming from the well. This would have indicated that the well was secure. Notably, well control experts testified that a flow check is one of the "gold standards" for determining if a well is flowing. On the other hand, Transocean's own drilling expert concluded in his report that the pressure anomaly during the sheen test should have prompted action from the drill crew and the mudlogger and that "displacement should not have resumed until the anomaly was diagnosed and the appropriate action taken."[121]

321. The Court finds that the anomalies between 9:08 p.m. and 9:14 p.m. should have been noticed by the Transocean drill crew and the Halliburton mudlogger, and that these anomalies should have been investigated before the displacement continued. Consequently, the Court also finds that Transocean and Halliburton violated 30 C.F.R. § 250.401.

v. 9:17: Pressure Spike

322. Shortly before 9:14 p.m. Well Site Leader Vidrine determined the sheen test was successful and ordered that the pumps be restarted and return fluids sent overboard. The pumps were restarted at 9:14 p.m. and displacement resumed.

323. Once the fluid was sent through the overboard pipe, the Halliburton flow out sensor was bypassed and the Halliburton mudlogger could no longer monitor flow out. Transocean's flow out sensor was not bypassed, and therefore the Transocean drill crew could still monitor flow out.

324. Around 9:17 a large pressure spike registered on the kill line (the pressure rapidly increased and then dropped) as pump no. 2 was brought online. The Transocean drill crew and the Halliburton mudlogger saw the pressure spike and reacted appropriately. Pumps 2, 3, and 4

[121] TREX 7676 at 47-48 (Barnhill Expert Report).

were immediately shut down (pump no. 1 remained on) and the Transocean driller dispatched personnel to the pump room to investigate.

325. Something had blocked the kill line, causing pressure to spike when the no. 2 pump was started.[122] A pressure relief valve subsequently opened, bringing the pressure back down.

326. These events were not indicative of a kick. However, they do show that the Transocean drill crew and the Halliburton mudlogger were responsive to the well.

vi. 9:31-9:38: The Transocean Drill Crew Fails to Timely Shut In the Well

327. Around 9:20 p.m. pumps 3 and 4 were restarted. Pump no. 2 remained off.

328. Around 9:25 p.m. pressure slowly started to build on the kill line. At 9:26 the pressure increased more rapidly and was around 830 psi by 9:27 p.m.. Thereafter the pressure gradually declined.

329. Between 9:27 and 9:30 p.m., the Transocean drill crew recognized the pressure readings on the kill line as an anomaly (although not yet as indicating a kick) and decided to shut down the pumps to investigate. Pumps 3 and 4 were shut down by 9:30 p.m. Pump no. 1 was shut down by 9:31 p.m.

330. Around 9:31 p.m., with all pumps off, pressure started to build on the drill pipe.

331. Mr. Barnhill stated that "[o]nce the rig pumps were shut down by 21:31 [9:31 p.m.], a manual flow check followed by an immediate shut-in of the Macondo Well should have occurred. This is basic well control that both men were schooled in and had successfully engaged in, in the past."[123] In fact, all of the drilling experts in this case uniformly testified that

[122] The LCM-spacer that had blocked the kill line during the negative pressure test was likely also the cause of this pressure spike.

[123] TREX 7676 at 49 (Barnhill Expert Report).

when the pumps were shut down at 9:31 p.m., the Transocean drill crew should have performed a flow check and then immediately shut in the well.

332. Under Transocean's policy and standard industry guidelines, the Transocean drill crew must shut in the well as quickly as possible if a kick is indicated or suspected. As Transocean's expert stated, the standard is to "[s]hut in and then figure out what you've got." The Transocean driller had full authority to shut in the well; he did not need permission from the BP Well Site Leader.

333. The Transocean drill crew did not perform a flow check at 9:31, nor did they attempt to shut in the well. These actions would not occur until around 9:41 p.m.

334. The Court finds that the Transocean drill crew's conduct fell below the standard of care when, upon shutting down the pumps at 9:31 p.m., they failed to perform a flow check followed by immediately shutting in the well. This also constituted a violation of 30 C.F.R § 250.401.

335. Furthermore, the Court finds that hydrocarbons did not enter the riser (i.e., move above the BOP) until at least 9:38 p.m. Once in the riser, there was nothing to stop hydrocarbons from reaching the surface.[124] Therefore, had the Transocean drill crew acted appropriately, the well would have been shut in while hydrocarbons were below the BOP, at which point they likely could have been circulated out of the well and the blowout and explosion avoided.

336. Consequently, the Court finds that the Transocean drill crew failed to exercise proper well control, which was a cause of the blowout, explosion, and oil spill.

[124] As explained below, the only means of stopping hydrocarbons in the riser from blowing out onto the rig is by activating the diverter system and sending the flow overboard.

vii. Actions by the Transocean Drill Crew Between 9:31 and 9:49 p.m., when the First Explosion Occurred.

337. After the pumps were shut down at 9:31 p.m., the drill pipe pressure increased from 1,240 psi to 1,750 psi over the next three minutes.[125] Meanwhile, pressure was steadily decreasing on the kill line, as it had been since about 9:27 p.m. A witness heard the Transocean toolpusher and driller discussing "differential pressure" around this time, but noted that their demeanor was not overly concerning. This indicates the drill crew viewed either or both of these pressures as an anomaly, but did not interpret them as indicating a kick.

338. The Transocean drill crew attempted to diagnose or troubleshoot the anomaly by bleeding off the pressure on the drill pipe. As discussed above, the drill crew should have performed a flow check and then shut in the well before attempting to diagnose the issue. Per the Transocean driller's instruction, a floorhand opened a valve on the standpipe manifold around 9:36 p.m. The pressure on the drill pipe dropped significantly but not entirely. Pressure quickly built up to 1,400 psi upon closing the valve at 9:38.

339. After the stand pipe was closed the drill crew began lining up the return fluids with the trip tank to perform a flow check.

340. At 9:40 or 9:41 p.m., the flow check was performed and significant flow from the well was noted.

341. Around this time mud began to spill onto the rig floor.[126]

342. At 9:41 or 9:42, the Transocean drill crew activated the BOP's upper annular preventer.[127] The upper annular was closed by 9:42 or 9:43, but did not fully seal around the

[125] The increase in drill pipe pressure at 9:31 p.m. reflects the fact that the top of the heavy drilling mud, which was previously below the drill pipe, was pushed above the bottom of the drill pipe by the hydrocarbon influx.

[126] At some point mud shot up the derrick. This may have occurred as early as 9:41, at the same time mud began to spill on the rig floor. By other accounts, mud did not shoot up the derrick until around 9:44 p.m.

drill pipe. This was because the annular preventer closed on the shoulder of a tool joint (where two segments of drill pipe meet), rather than on a pipe of uniform diameter.

343. Around the time the Transocean drill crew activated the annular preventer or soon thereafter, they closed the diverter packer and routed the flow of hydrocarbons to the mud-gas separator ("MGS"). As discussed below, the crew should have diverted flow overboard and away from the rig, rather than to the MGS.

344. The MGS was quickly overwhelmed. Around 9:44 mud and water sprayed from the MGS vents.

345. At approximately 9:46 p.m. a loud hissing noise began. High pressure gas had reached the rig surface and began venting onto the HORIZON's deck and into enclosed spaces.

346. At 9:46 p.m. the drill crew activated the BOP's upper and middle variable bore rams, which closed around the drill pipe by 9:47.[128]

347. At 9:47 p.m., the drill pipe pressure started rapidly increasing, indicating that the variable bore rams had sealed the annulus. This likely led the drill crew to believe they had regained control of the well. However, gas continued to vent onto the rig.

348. At 9:49 the gas ignited and exploded. The ignition source is unknown. Given the extent to which the gas had likely spread by this point, multiple potential ignition sources existed.

viii. Diversion to the Mud-Gas Separator

349. Once hydrocarbons enter the riser, the only way to prevent them from blowing out onto the rig is by using the diverter system.

---

[127] The upper annular preventer is one of the sealing elements in the BOP. It is a doughnut-shaped element designed to close around the drill pipe and seal the annulus between the drill pipe and the BOP wellbore. The annular preventer does not shear through or seal the drill pipe itself.

[128] The variable bore rams are two more sealing elements in the BOP. Like the annular preventer, variable bore rams are designed to seal the annulus between the drill pipe and the BOP wellbore, but they do not shear or seal the drill pipe.

350. To operate the system, the Transocean drill crew member would first close the diverter packers by pushing the appropriate button on the BOP control panel. He would then push a button marked "OVERBOARD" if he intended to divert the flow overboard, or "VERTICAL/MGS" if he intended to send return fluids to the MGS. If he selected "OVERBOARD," he would then press "PORT," "STARBOARD," or "BOTH," depending on which way he wanted the fluids to discharge.

351. The MGS is a low-pressure system used to separate small amounts of gas from drilling mud; it was not designed or intended to handle the volumes and pressures that occurred on April 20, 2010.

352. The purpose of the overboard diverter was to divert gas away from the rig. Transocean's well control procedures instructed that "if there is a rapid expansion of gas in the riser, the diverter must be closed (if not already) and the flow diverted overboard."[129] Furthermore, Transocean's Major Accident Hazard Risk Assessment of the DEEPWATER HORIZON listed "[u]tilization of diverter system" as a mitigation for "[g]as in riser."[130]

353. As mentioned above, fluids were initially diverted to the MGS, not overboard. The MGS was quickly overwhelmed. Gas reached the rig at 9:46 p.m. and subsequently vented onto the rig from several release points due to diversion to the MGS.

354. Fluids should have been diverted overboard, rather than to the MGS.

355. If the drill crew had diverted overboard, it would have at least delayed, if not avoided, the explosion. As BP's drilling expert, Dr. Adam Bourgoyne, explained, even if the crew had diverted overboard, the diverter system likely would have failed after some time. However, diverting overboard would have provided the crew with more time during which they

[129] TREX 41008 AT 207.
[130] TREX 2187 at 179.

could have taken further actions, such as shearing through the drill pipe and, if necessary, disconnecting the HORIZON from the well.

356. The default setting on the diverter system was to direct flow to the MGS, which might explain why the flow was diverted to the MGS. There is evidence that BP desired this default in order to avoid discharging oil-based mud into the Gulf. It also appears that Transocean agreed with this default setting, or at least did not object to it.[131]

357. Even if the default setting was to divert to the MGS, the diverter should have been lined up to discharge overboard prior to displacing the well to seawater, as Dr. Bourgoyne explained.

358. If the drill crew intentionally diverted the flow to the MGS, then it evinces a lack of training in the proper use of the diverter system, given the situation they encountered. As Dr. Bourgoyne stated in his report,

> The [Transocean] training material that I reviewed was appropriate and of a high quality. What may have been lacking were adequate emergency drills simulating high flow rate conditions. Training intensity for dangerous but very rare events is always hard to maintain. When an event does happen, the response has to be automatic. There might not be time to think about it.[132]

Notably, an investigation report of a riser unloading incident on another Transocean MODU in 2009 noted a "lack of explanation about the proper use of the diverter."[133]

359. Whether the reason flow was diverted to the MGS was because it was the default setting on the diverter system or because it was a conscious decision by the Transocean crew, the Court agrees with Dr. Bourgoyne's conclusion that the diverter system should have been set up so that if the pressure in the MGS exceeded a certain point, flow would be automatically rerouted

[131] *See, e.g.*, Transcript at 1787:19-22 (Ezell).
[132] TREX 8173.
[133] TREX 5650 at 14.

to the overboard diverter lines.[134] Dr. Bourgoyne explained that such technology was available prior to 1999, and it would have been feasible, practical, and not cost prohibitive to use.

360. Finally, some witnesses claim they saw a defined stream of fire flowing from the overboard diverter line. Based on these accounts, Transocean argues the drill crew eventually diverted overboard. BP's investigation report concluded that this stream was likely from a relief line on the MGS, which was near the overboard line. It is also possible that elements in the diverter system eventually failed during the blowout, allowing hydrocarbons to take a number of flow paths, including but not limited to the overboard lines. The Court finds that the weight of the evidence shows that the Transocean drill crew likely did not divert flow overboard.

ix. Simultaneous Operations Hindered Well Monitoring

361. Transocean bears much of the blame for the well monitoring and well control failures. Halliburton shares some of the blame for missing the anomaly between 9:08 and 9:14 p.m. However, the Court finds that BP also shares a substantial part of the blame for the well monitoring and well control failures.

362. BP was responsible for ensuring that procedures on the rig allowed for the proper monitoring of the well, and BP's Well Site Leaders decided whether simultaneous operations would be permitted during displacement.

363. Normally, operations which could affect well monitoring are halted during sensitive operations such as well displacement. BP allowed simultaneous operations during the safety-critical operation of displacement.

364. One of the most significant parameters for kick detection is total pit volume. BP did not insist on a closed-pit system during the displacement; instead, BP permitted the rig crew

[134] Transcript at 7581-83 (Bourgoyne); TREX 8173 at 67.

to pump seawater from the sea chest directly to the well, meaning no one could monitor the total balance of pit volumes.

365. Another significant parameter for kick detection is the ability to compare flow into the well vs. flow out of the well. During the final displacement, pit transfers and other activities occurred that sometimes increased flow across the flow line. This masked flow out of the well.

366. As noted above, after fluids were dumped overboard following the sheen test, the Halliburton flow meter was entirely bypassed.

367. There is some evidence that crane operations during displacement and the resulting rig heave may have caused flow line and pit volume fluctuations as well.

368. By allowing these operations, BP impeded the ability of the Transocean drill crew and the Halliburton mudlogger to monitor for a kick. The Court finds that BP violated 30 C.F.R. § 250.401(a),(c),(d).

369. On a related note, the BP Well Site Leader should have prepared a pump displacement schedule for the drill crew. A pump displacement schedule identifies what pressures should occur at different steps of the displacement. This enhances the ability to detect pressure anomalies. Given that primary kick indicators such as pit volume and flow out were compromised during the displacement, BP should have prepared a pump displacement schedule.

J. The BOP's Automatic Functions: AMF and Autoshear

i. Configuration of the HORIZON's BOP

370. The BOP is a safety-critical device. Generally speaking, a BOP sits on top of the wellhead and acts as a barrier that can be activated, either manually or automatically, to close in a well and prevent hydrocarbons from flowing up into the riser.

371. BOPs can be configured in different ways. For example, the number and type of sealing and shearing elements may vary from BOP to BOP. The DEEPWATER HORIZON's BOP stack was manufactured and supplied by Cameron. However, BP and Transocean specified the configuration of the HORIZON's BOP stack, including the number and type of ram preventers, bore size, and working pressures.

372. Figure 9 is an illustration of the HORIZON's BOP stack:

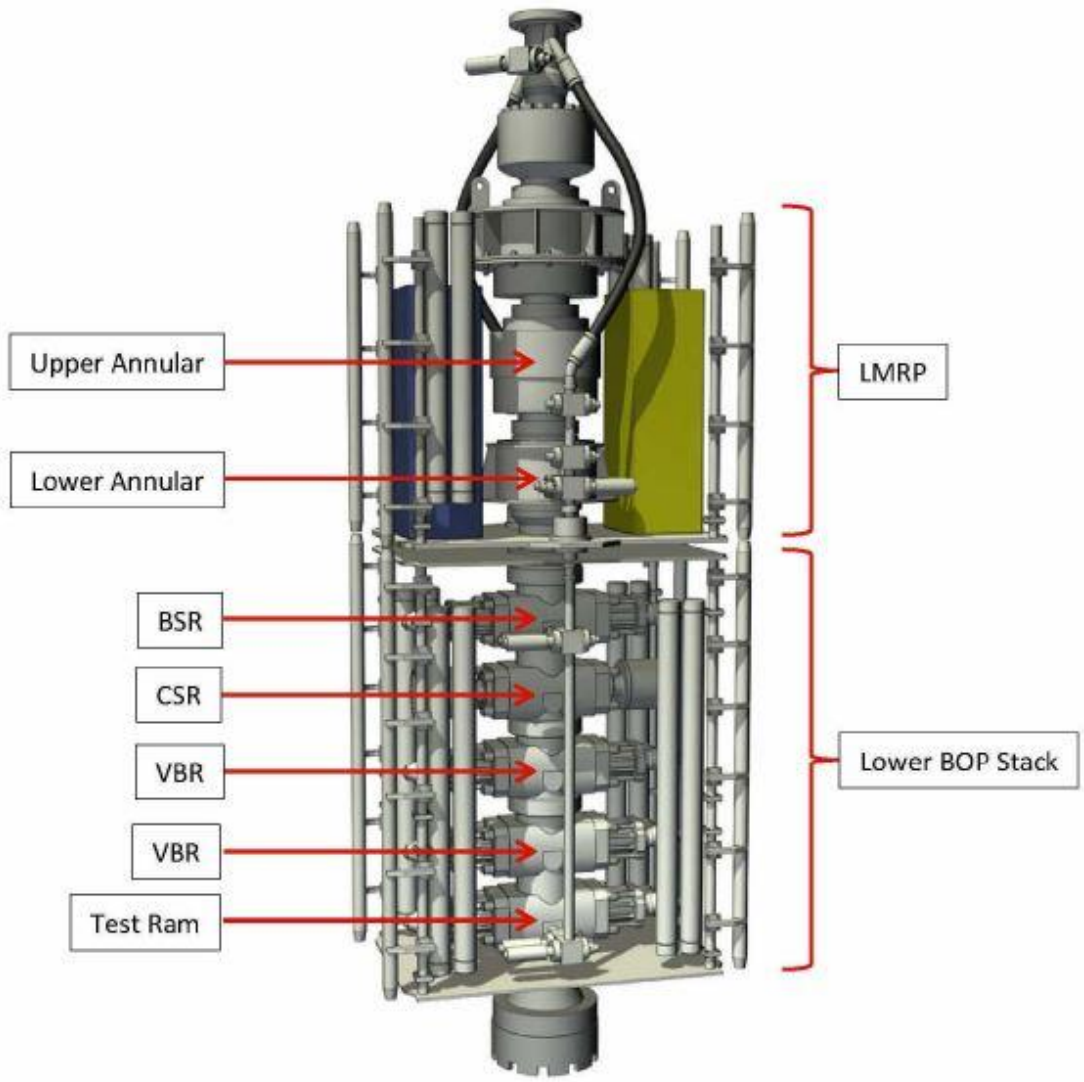

Figure 9 [135]

[135] TREX 7535 at 11 (Perkins Expert Report) (crediting image to Engineering Partners International, LLC).

373. The HORIZON's BOP stack was comprised of two main parts: a lower marine riser package ("LMRP") and a lower BOP stack. The LMRP sat atop the lower BOP stack.

374. The LMRP contained two sealing elements: an upper annular preventer and a lower annular preventer. These are doughnut-shaped elements designed to close around the drill pipe and seal the annulus.[136] They do not cut through or seal the drill pipe.

375. The lower BOP stack contained five pairs of rams. Those were, from top to bottom, the blind shear rams ("BSRs"), casing shear rams, upper variable bore rams, middle variable bore ram, and test rams.

376. The BSRs consist of two rams on opposite sides of the wellbore. Each ram has a blade. On this specific model BSR, known as a Shearing Blind Ram, one of the blades had a shallow "V" shape to it when viewed from above. The other blade was straight. Neither blade extended across the entire BOP wellbore. When activated, the rams are designed to close together, shearing the drill pipe between them and sealing the well. Notably, the BSRs were the only components in the HORIZON's BOP stack designed to both cut drill pipe and seal the well.

[136] At the time of explosions, a 5-1/2 inch drill pipe passed through the BOP's wellbore. Here, "annulus" refers to the space between the drill pipe and the BOP wellbore.

377. Figure 10 illustrates the BSRs used in the HORIZON's BOP and how they were intended to shear drill pipe.

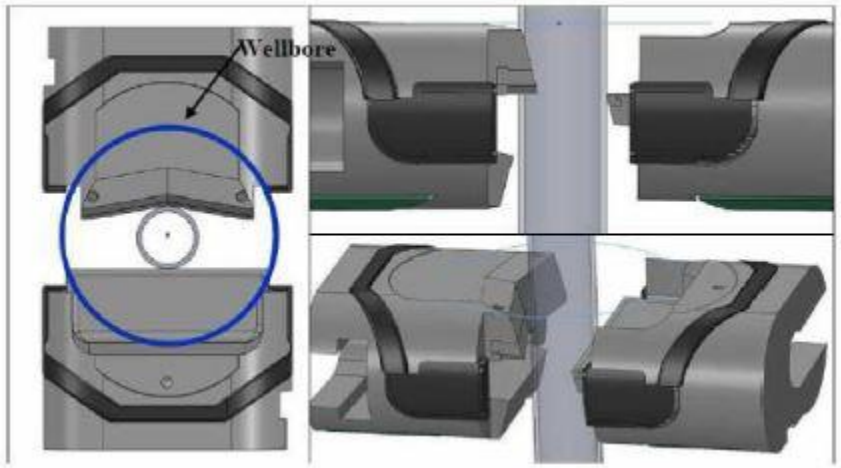

Figure 10 [137]

378. The casing shear rams were located beneath the BSRs. The casing shear rams had two V-shaped blades. The "V" of these blades was much deeper than the "V" of the one BSR blade, and the casing shear rams had a greater shearing capacity than the BSRs. However, unlike the BSRs, the casing shear rams do not seal the well upon closure.

379. Below the casing shear rams were the upper variable bore rams and then the middle variable bore rams. These rams were similar to the annular preventers in that they will seal the annulus between the drill pipe and wellbore, but they will not shear or seal the drill pipe.

380. At the bottom of the lower BOP stack were the test rams. These could seal the annulus, but only with respect to flow coming from above. The test rams would not stop flow coming from below; i.e., flow from the well.[138]

[137] TREX 61123 at 9 (Stevick Expert Report) (crediting Det Norske Veritas report). Note that the drill pipe is shown centered in the wellbore. As discussed below, the drill pipe was actually against the side of the wellbore when the BSRs activated.

[138] The HORIZON's lower BOP stack was originally configured with a third pair of variable bore rams, rather than the test rams. In 2004, BP chose to convert the lower variable bore rams to test rams.

ii. AMF and Autoshear

381. The BOP could be operated manually from the DEEPWATER HORIZON. As previously discussed, some of the BOP's sealing elements were manually activated by the drill crew prior to the explosions. There were also two methods by which the BOP was designed to function automatically.

382. Automatic Mode Function ("AMF," also called the "deadman" function) was intended to automatically close the BSRs upon certain emergency conditions. These conditions were a loss of power, communication, and hydraulic supply between the rig and the BOP. When this occurred, the control pods located on the BOP stack, now running on battery power, would activate the BSRs.

383. The parties agree that the conditions for AMF were met during or shortly after the explosions at 9:49 p.m. on April 20, 2010.[139] As explained below, however, the parties disagree over whether the BSRs actually activated at this time.

384. The second method is "Autoshear," which was designed to automatically close the BSRs if the LMRP detached from the lower BOP stack. This could occur, for example, if the HORIZON drifted too far off station. Unlike AMF, which relies on electric batteries to function, Autoshear was a purely hydraulic operation.

385. On April 22, 2010, at 7:48 a.m., a remotely operated vehicle ("ROV") simulated LMRP detachment by cutting the Autoshear plunger on the outside of the BOP. This did not detach the LMRP, but it should have activated the Autoshear system and closed the BSRs, unless they had already closed when AMF conditions were met two days earlier.

[139] The MUX (multiplex electronic control) cables, which provided power and communication to the BOP, were likely destroyed in the initial explosions. The hydraulic line may have lasted slightly longer before it was compromised by the fire. In any event, AMF conditions were present within a few minutes of the explosions.

iii. Improper Maintenance Prevented AMF from Closing the BSRs on April 20, 2010.

386. It is undisputed that the BSRs activated at some point after the explosions on April 20 at 9:49 p.m., but before the HORIZON sank on April 22 a little after 10:00 a.m.

387. It is also undisputed that the BSRs failed to seal the well.

388. The experts who testified about the BSRs agree that the reason the BSRs failed to seal the well is that the drill pipe was located on the side of the wellbore and partially outside the BSRs' blades at the time the BSRs were activated. This prevented the BSRs from fully closing and sealing the well.

389. The experts disagree over exactly when the BSRs activated. There is a related disagreement over what caused the drill pipe to be off-center.

390. Two theories were presented at trial as to when the BSRs activated.

391. Transocean's BOP expert, Greg Childs, opined that the BSRs closed when AMF conditions were met on April 20, 2010. However, the rest of the experts concluded that maintenance issues with the BOP prevented BSRs from activating at this time. These experts instead believe that the BSRs did not close until the morning of April 22, 2010, when the ROV triggered the Autoshear function by cutting the Autoshear pin.

392. Having considered the testimony and evidence presented at trial, the Court agrees with the view that the BSRs did not activate when AMF conditions were met on April 20, 2010, due to improper maintenance on the BOP.

393. The BOP had two control pods, known as the "blue pod" and the "yellow pod." In normal operations, these control pods would operate the BOP according to signals received from the rig floor through MUX cables. When the control pods lost electrical and hydraulic power and communication with the rig, the AMF systems within the pods would activate. The

control pods were redundant; either one or both could activate the BSRs whenever AMF conditions were met.

394. Each control pod contained, among other things, a 27-volt battery and a solenoid valve. In simplified terms, when AMF conditions are present electric current from the battery flows through the solenoid valve, causing it to open. This releases pressurized hydraulic fluid that forces the BSRs closed.

395. The blue pod failed to activate the BSRs on April 20 because its 27-volt battery was too weak to open the solenoid valve.

396. Notably, the blue pod's 27-volt battery was in a depleted state when it was tested after the incident. Other batteries in the blue and yellow pods were found to be sufficiently charged when tested after the incident. As BP's expert, Arthur Zatarain, explained, the only way these conditions could exist is if the blue pod's 27-volt battery was also in a depleted state on April 20, 2010. Furthermore, the blue pod's 27-volt battery had not been changed since November of 2007, two-and-a-half years before the blowout. Cameron, the manufacturer of the BOP, recommended that the 27-volt batteries be changed after one year of "on-time operation."

397. The yellow pod failed to activate the BSRs at AMF time because its solenoid valve—or more specifically, one of the coils within the solenoid valve—was reverse wired.

398. Within each solenoid valve are two coils wrapped around a metal rod called a plunger. A spring usually holds the plunger in the "closed" position. When electric current passes through these coils, a magnetic field is created. In a properly functioning solenoid, this magnetic field moves the plunger to the "open" position, creating a flow path for hydraulic fluid that ultimately activates the BSRs.

399. It is undisputed that one of the two coils in the yellow pod's solenoid valve was reverse wired. Consequently, the reverse-wired coil produced a magnetic field with polarity opposite from the other coil. When AMF conditions were met on April 20, 2010, each coil simultaneously pulled in opposite directions, effectively cancelling out the other, and the plunger remained closed.

400. Debris may have also contributed to the solenoid's failure. The Court finds, however, that had the yellow pod solenoid been correctly wired, any debris would not have prevented the solenoid from opening.

401. Mr. Childs, Transocean's expert, opined that the 27 volt battery in the blue pod was sufficiently charged on April 20, 2010, and that the solenoid in the yellow pod operated despite being reverse wired. The Court finds these explanations lack credibility and are unpersuasive.

iv. The BSRs Would Have Sealed the Well if AMF Had Functioned

402. There were conflicting opinions as to whether the BSRs could have sealed the well if they had activated when AMF conditions were met on April 20, 2010.

403. Some experts propose that by the time AMF conditions were met, the drill pipe was buckled and forcibly held off-center by the flow coming from the well.

404. Other experts proposed that the flow rate was not great enough to cause buckling at this time, and that the drill pipe should have been centered or nearly centered when AMF conditions were met. These experts opined that the drill pipe was not forced to the side of the wellbore until sometime later.

405. Although there is much conflicting testimony on this issue, after weighing all of the evidence, the Court finds that it is more likely than not that the drill pipe would have been

centered at the time AMF conditions were met on April 20, 2010 and, therefore, the BSRs would have fully sheared the drill pipe and sealed the well had they been activated by AMF.

v. Responsibility for BOP Maintenance

406. Under then-existing MMS regulations, BP and Transocean were required to "maintain [the] BOP system to ensure that the equipment functions properly."[140]

407. Under the contract between BP and Transocean, Transocean was responsible for maintaining the HORIZON's BOP.

408. Transocean had a policy of changing control pod batteries every year. Cameron, the manufacturer of the BOP, similarly recommended that control pod batteries be replaced after "one year of on-time use."

409. Despite its own policy and Cameron's recommendation, Transocean had not replaced the blue pod's 27-volt battery since November 2007.

410. A simple voltage test performed on the blue pod's batteries before deploying the BOP at Macondo would have detected the depleted battery. There is no evidence that Transocean conducted such a test.

411. Transocean also could have detected the depleted battery if it had run an actual AMF sequence while the BOP was on the surface. Although this sequence is required under Transocean's Well Control Handbook, there is no evidence that it was done before deploying the BOP at Macondo. According to Transocean's Senior Subsea Supervisor, AMF had not been tested in eight years.

412. On February 12, 2010, Cameron notified Transocean's Subsea Superintendent that the batteries on the HORIZON's spare control pod were depleted less than a year after they

[140] 30 C.F.R. § 250.400 ("The requirements of this subpart apply to lessees, operating rights owners, operators, and their contractors and subcontractors."); 30 C.F.R. § 446 ("You must maintain your BOP system to ensure that the equipment functions properly. . . .").

had been installed on the spare control pod. This alerted Transocean to other potential battery issues. On February 16, 2010, Transocean's Subsea Superintendent forwarded an e-mail to the HORIZON's Subsea Supervisors. The e-mail's subject line was "Battery replacement" and contained a bulletin from Cameron that stated the control pod's batteries should be changed after "[o]ne year of on time operation." Three days later, Transocean's Subsea Supervisor aboard the HORIZON attempted to check the battery charge of the blue pod, but could not obtain that information while the blue pod was latched onto the Macondo well. On February 24, 2010, the HORIZON's Senior Subsea Supervisor informed Transocean's Rig Manager-Asset for the HORIZON that the blue pod's batteries had not been changed since November of 2007. Despite discovering that the batteries in the blue pod had not been changed since 2007, and after a futile attempt to ascertain the charge of the blue pod batteries while on the Macondo well, and with knowledge that the batteries in the spare pod were depleted after less than a year, there is no evidence that Transocean took any further action to determine the charge of the blue pod batteries.

413. Additionally, there was alternative technology available with rechargeable batteries and battery monitoring that could have been incorporated into the HORIZON's BOP. This technology was being utilized on many drilling rigs. Of the 29 control systems in Cameron's 2008 build cycle, 23 of those used this technology (known as the Mark III control system). BP even upgraded to this system on another rig. Had the HORIZON's control system been similarly upgraded, the depleted battery would have been detected and presumably changed.

414. The solenoid valve at issue in the yellow pod was rebuilt and installed in February 2010. The wiring defect could have been detected simply by following the solenoid testing

protocol that Cameron and Transocean provided. There is no evidence that the proper testing was performed on the solenoid valve.

415. Accordingly, Transocean is responsible for failing to maintain the BOP and consequently violated 30 C.F.R. § 250.446. This fault may also be attributable to BP by virtue of 30 C.F.R § 250.400, but the Court does not reach this issue.

vi. The BSRs Partially Closed, but Did Not Seal, on April 22, 2010, When the Autoshear Plunger Was Cut

416. The Court finds that the BSRs first activated on April 22, 2010, at 7:48 a.m., when an ROV simulated LMRP detachment by cutting the Autoshear pin on the BOP.

417. Even though the BSRs activated at Autoshear time, they could not fully close and seal the well because the drill pipe was against the side of the wellbore and partially outside the BSRs' blades.

418. As previously noted, the BSRs' blades did not span the entire width of the wellbore. The BOP's wellbore was 18-3/4 inches. The BSRs' lower blade was 17-7/8 inches; the upper, V-shaped, blade was 15-1/4 inches.

419. The Court heard various theories as to why the drill pipe was off-center. As mentioned earlier, some experts believe the upward flow from the well buckled the pipe.[141] Some experts opined that the drill pipe was buckled by a sudden force from above—when the heavy traveling block in the HORIZON's derrick fell, which occurred approximately 30 minutes

[141] Transocean's expert, Greg Childs, testified that the drill pipe would have been buckled by a force from below at the time AMF conditions were met, but that the pipe would not be buckled later, when Autoshear was activated. Halliburton's expert, Dr. Glen Stevick, testified that the drill pipe would have been buckled by upward flow when AMF conditions were met, and it would have remained buckled when Autoshear was activated. The United States expert, Dr. Rory Davis, testified that upward forces were not great enough to push the pipe off-center at the time AMF conditions were met; however, he further testified that by the time Autoshear was activated, the conditions had changed such that there were a number plausible reasons for the drill pipe to be off-center, including upward flow from the well.

after the explosions on April 20, 2010.[142] A third theory was that the HORIZON had drifted far enough from the well that drill pipe deflected inside the BOP, causing it to be off-center.[143]

420. The Court finds it is not necessary to determine why the drill pipe was off-center at the time Autoshear activated. It is clear that the pipe was off center at this time, and for that reason, the BSRs could not fully shear through the pipe and seal the well.

vii. The Configuration of the BOP Was Not Unreasonable or Not Causal

421. The specific model BSRs used on the HORIZON's BOP was Cameron's Shearing Blind Rams. As noted above, this model had one V-shaped blade and a straight blade.[144] Neither blade spanned the entire width of the well bore.

422. Some parties contend that BP and Transocean should have selected Cameron's DVS (Double "V" Shear) rams instead of the single-V Shearing Blind Ram. The DVS rams have two V-shaped blades, which, according to the United States' expert, Dr. Rory Davis, increased its ability to center drill pipe in the well bore. These parties note that DVS rams were available when the HORIZON was built, or they easily could have been retrofitted later.

423. However, it has not been shown that the DVS rams would have succeeded where the single-V Shearing Blind Rams failed. Notably, the blades on the DVS also do not span the entire wellbore.

424. Accordingly, the Court finds that the decision to use the Shearing Blind Rams as opposed to the DVS rams did not prevent the BOP from sealing the well.

425. Several other arguments were raised that the HORIZON's BOP and related components should have been configured differently. The Court finds that some of these issues

[142] BP's expert, Forrest Shanks, II, testified in support of this theory. Dr. Davis also found this theory plausible.

[143] Dr. Davis proposed this theory.

[144] *See supra* Figure 10

were not causal. As to other issues, it has not been shown that the selected configuration was below industry standard, below regulatory standards, or otherwise unreasonable.[145]

K. Actions by the Marine Crew

i. EDS and the Master's Overriding Authority

426. The Emergency Disconnect Sequence ("EDS") is a function that closes the BSRs and detaches the LMRP from the lower BOP stack, allowing the HORIZON to drift or drive away from the well.[146]

427. EDS could be activated from the drill shack, engine control room, or the bridge. Activating EDS required pushing at most two buttons on the BOP control panel.

428. EDS was not attempted until a few minutes after the explosions occurred at 9:49 p.m. By the time EDS was attempted, the MUX cables and hydraulic lines that ran from the rig to the BOP had been destroyed. Consequently, no elements in the BOP operated and the LMRP did not detach when EDS was first attempted on April 20, 2010.

429. The Court heard competing opinions over when EDS should have been attempted.

430. BP's expert, Captain Andrew Mitchell, and the PSC's expert, Geoff Webster, concluded that a prudent master should have activated EDS upon seeing mud rain down on the M/V DAMON BANKSTON ("BANKSTON"), which they contend occurred around 9:41 p.m. Under this timeline, the master would have had about 8 minutes to activate EDS before the first explosion occurred.

[145] The Court notes that the events of April 20, 2010 may very well change, if they have not already, the standard by which BOPs will be judged. Consequently, configurations or components that were once viewed as reasonable or meeting regulatory standards, etc., may no longer suffice. Here, however, the Court does not apply a post-Macondo standard, whatever it may be.

[146] There were actually two EDS modes on the HORIZON. The mode described is commonly called "EDS- 1" or "EDS-Normal." Under "EDS-2" or "EDS-Casing," the CSRs activate first, then the BSRs, and then the LMRP detaches.

431. According to Transocean's expert, Jeff Wolfe, the first evidence of a well control event that could be observed by the master was when gas alarms began to sound on the bridge, which occurred only 2 or 3 minutes before the explosion. Mr. Wolfe further explained that EDS is a last resort when all well control efforts have failed and that initiating EDS without confirming the status of the drill crew's well control efforts could have interfered with activities that the drill crew was taking to shut in the well. Also, if a tool joint is across the BSRs when EDS is activated, they might not fully shear the pipe and seal the well, meaning that hydrocarbons would discharge into the sea once the LMRP detached. Mr. Wolfe pointed to evidence that the bridge crew was trying to establish communication with the drill floor when the blowout occurred. Based on this and the short amount of time the master had to act, he concluded that the failure to activate EDS before the explosions was not improper.

432. The explosions were preceded by a series of events that would have been observed by the HORIZON's master, Captain Curt Kuchta, while he was on the bridge. However, there is conflicting evidence as to when these events occurred and/or what was observed from the bridge, making it difficult to establish an exact timeline of events. Having considered the evidence and the testimony, the Court finds that the master witnessed the following events prior to the explosions:

433. Sometime between 9:41 p.m. and 9:46 p.m., the HORIZON jolted and/or began to shake.

434. Seconds after the jolt and/or shaking started but before 9:46 p.m., the master opened a door on the port side of the bridge and saw drilling mud raining down on the BANKSTON.

435. After the jolt and/or shaking started but before 9:46 p.m., someone from the drill floor called the bridge and said, "we have a well control issue" or something similar, and hung up. The Dynamic Positioning Operator ("DPO") who answered the call attempted to call the drill floor back, but no one responded.

436. Around 9:46 p.m., there was a loud hissing noise.

437. Seconds after the hissing noise, gas alarms began to go off on the bridge. The first alarm indicated gas was in the shale shaker room. This alarm was immediately followed by many other gas alarms. The Senior DPO called the shale shaker room to warn anyone there about the gas, but no one answered after seven rings.

438. Around 9:47 or 9:48 p.m., the bridge received a second call that said "well control situation" and hung up. The junior DPO called the drill floor, but no one answered.

439. Sometime before 9:48 p.m., the junior DPO, the senior DPO, and/or the master radioed the BANKSTON and told it to move away from the HORIZON.[147]

440. When the master felt the rig shake and then saw mud raining down on the BANKSTON, he should have understood that a blowout was occurring. When he heard the loud hissing noise, he should have suspected, if not believed, that combustible gas from the well was venting onto the HORIZON. The first gas alarm should have confirmed this suspicion or belief. When the other gas alarms sounded, the master should have understood that a large amount of gas was rapidly spreading over the HORIZON, and that the HORIZON and her crew were in imminent danger. The master should have activated EDS at this point.

441. When the shale shaker and the drill floor did not answer the calls from the bridge, the master should have assumed that EDS provided the only chance of avoiding catastrophe.[148]

[147] It is unclear when this occurred. By some accounts, the BANKSTON was told to move away as early as 9:42 p.m. Other accounts state 9:48 p.m.

Accordingly, the Court finds that a prudent and properly trained master would have activated EDS between 9:47 and 9:48, if not when the gas alarms sounded.

442. Furthermore, the Court finds that the master's failure to timely activate EDS was not because he was attempting to communicate with the drill floor, as Transocean suggests. The Court instead finds that the master did not timely activate EDS because he did not believe that he had the authority to do so.

443. Under Transocean's policy, the Offshore Installation Manager ("OIM") was the "person in charge" while the HORIZON was in drilling mode or on location. When the HORIZON was in transit mode, the master was the "person in charge." Under the International Safety Management Code and other laws applicable to the HORIZON, the master should have retained overriding authority at all times and should take command during an emergency.

444. There are some inconsistencies among Transocean's policy documents regarding the HORIZON's command structure. On whole, however, they generally reflect that the master would take command in an emergency. However, Transocean's policy was not clear on what constituted an "emergency" or how the transition occurred. A poignant example comes from a letter sent to the HORIZON's master on August 22, 2009, that stated, in pertinent part, "the Company designates the Master 'Person in Charge' during and [*sic*] emergency as specified in the Station Bill." The letter goes on to state, "Well Control Operations are not an 'emergency' within the scope of this paragraph."[149]

---

[148] The Court previously noted that the drill crew may have believed they regained well control at 9:47, once the variable bore rams had closed. However, no one on the bridge would have known what the drill crew likely believed.

[149] TREX 5033 at 2 (emphasis in original).

445. Even Transocean's expert conceded that "when they started seeing . . . the mud and/or gas alarm" an emergency was present such that the master became the "person in charge."[150]

446. The weight of the evidence showed that Captain Kuchta did not believe he was in charge when those events occurred or even after the explosions. Instead, Captain Kuchta believed the OIM, Jimmy Harrell, was still in charge. Notably, the master wanted permission from the OIM to activate EDS even ***after*** the explosions occurred and the rig was on fire.[151]

447. The Court finds that Transocean's ambiguous command structure regarding the master's authority in emergency situations caused him to fail to activate EDS in a timely manner. Captain Kuchta was inadequately trained in the use of EDS. Captain Kuchta also had not received Major Emergency Management training, nor had he been assessed competent as a person in charge, both of which Transocean required for its masters. These deficits are significant, given that one of the reasons EDS could be activated from the bridge was "so that the master can exercise his overriding authority and responsibility to take whatever action he needs to take to save his ship, safeguard his crew, [and] protect the environment . . . ."[152]

448. The Court finds that if EDS had been activated when the drill crew failed to respond to the DPO's call, the BSRs would have shut in the well, the LMRP would have detached, and the rig would have drifted away from the well.

449. However, activating EDS at this time would not have avoided the explosions. At that point gas would have already been in the riser, and it would have continued upwards and vented onto the rig floor even though the LMRP had detached. Nevertheless, without a

[150] Wolfe Dep. at 237:05-14.

[151] Jimmy Harrell did not arrive on the bridge until a few minutes after the explosions. When he did, he immediately instructed someone to activate EDS.

[152] Transcript at 9419:11-14 (Mitchell).

continuous flow of hydrocarbons to fuel the fire, the consequences probably would not have been as grave. The explosions may not have been as severe, and/or the attempts to extinguish the fire afterwards probably would have succeeded.

450. Finally, the Court notes that Captain Kuchta's training deficits manifested in ways other than the failure to activate EDS, although they may not have resulted in any greater damage, injuries, or loss of life. At 9:53 p.m., the DPO took it upon herself to issue the first of multiple "Mayday" calls and activated the Global Maritime Distress Safety System ("GMDSS"). These actions were entirely appropriate given that the rig had sustained at least two explosions, had lost power, a massive fire raged, and areas of the rig were already destroyed and/or inaccessible. Nevertheless, Captain Kutcha verbally reprimanded the DPO for sending the distress signals. The evidence also reflects that the Chief Mate and the Senior DPO were doing a better job of taking charge of the situation than the Captain. The Chief Mate had to physically bring the master outside the bridge and show him the fire in order for the Captain to agree with the Chief Mate that the rig needed to be abandoned. BP's marine safety expert, Captain Mitchell, commented, "I find that quite inconceivable that somebody who is the captain of the ship and who had been in this situation has to be told the gravity of the situation by his junior officer."[153]

ii. Other Actions by the HORIZON's Crew Following the Explosions

451. Despite the master's initial failings, the Court finds the HORIZON's crew acted appropriately and bravely in the face of chaotic circumstances that are, frankly, difficult to genuinely understand.

[153] Transcript at 9431:20-23 (Mitchell).

452. As mentioned above, the bridge crew advised the M/V DAMON BANKSTON to move away from the rig prior to the explosions. After the explosions, the Senior DPO requested the BANKSTON to retrieve men from the water who had jumped overboard.

453. The DPO, Senior DPO, and the Chief Mate all attempted to activate the general alarm. Although this did not happen until after the first explosion, it has not been shown that any delay in sounding the alarm caused or contributed to any injuries or deaths, the oil spill, etc.

454. The DPO and Senior DPO made several announcements over the rig's public address system including that there was a fire aboard the rig, all persons needed to muster, and later to abandon the rig. As mentioned above, the DPOs issued multiple distress calls and activated the GMDSS.

455. There were multiple instances of heroic acts that no doubt saved the lives of several injured persons. For example, after digging himself out of debris in what had been the accommodations area of the rig, Senior Toolpusher Randy Ezell found Wyman Wheeler and Buddy Trahan, both of whom were partially buried in debris and seriously injured. Mr. Ezell uncovered both men. Other crewmates soon arrived with a stretcher and evacuated Mr. Trahan, whose injuries were the most serious. Mr. Ezell tried to lift Mr. Wheeler and walk him out by himself, but Wheeler was too injured to be moved without a stretcher. Wheeler told Ezell to leave him behind, but Ezell refused and instead waited with his crewmate for another stretcher to arrive, all while the rig burned about them. Eventually another stretcher appeared and Wheeler was evacuated.

456. 115 of the 126 people aboard the HORIZON survived the events of April 20, 2010. Furthermore, it appears that everyone who survived the initial explosions managed to

evacuate the rig. This is a testament to the safety training that Transocean did implement aboard its rig.

457. Even though half of the HORIZON's lifeboats and life rafts could not be accessed due to the fire, the overwhelming majority of evacuees were able to escape the rig via the two forward lifeboats. The record reflects the lifeboats waited as long as reasonably possible before deploying, which gave many the opportunity to board. The lifeboats deployed around 10:19 p.m. and 10:25 p.m.

458. Four people jumped roughly 75 feet into the sea before the lifeboats were launched. The Court agrees with Mr. Wolfe's conclusion that "[i]t is a true testament to the crew's training and safety culture that only these individuals jumped prior to any lifesaving appliance being launched."[154]

459. After the lifeboats launched, seven people evacuated in one of the three forward life rafts. These people were largely delayed because they were busy helping others evacuate. Notably, Mr. Ezell and Mr. Wheeler, who was in a stretcher, evacuated in this raft.

460. The Court further notes that Captain Kuchta, despite his earlier actions, acted nobly later. The life raft was launched by Captain Kuchta and the Senior DPO, Yancy Keplinger. Consequently, these were the two last people on board the HORIZON, and they evacuated by jumping into the water. Once in the water, the life raft remained tied to the rig by a painter (rope). Some people jumped into the water to swim away from the intense heat. A fast rescue boat from the BANKSTON was nearby, but could not approach the raft due to fire on the water. Captain Kuchta swam to the fast rescue boat, retrieved a knife, swam back to the raft, and cut it free so the raft and those in it could be towed to safety.

[154] TREX 50003 at 15 (Wolfe Report).

L. Alarm Systems and Rig Maintenance

i. General Alarm, Emergency Shut Down, and Other Alarms

461. The Court heard much testimony about the configuration of various detection and alarm systems on the HORIZON.

462. The general alarm system was configured to require manual activation, but also would automatically activate if another alarm, such as a gas alarm, went unacknowledged for two minutes. The Court finds this configuration was not improper and complied with applicable law.

463. The HORIZON's fire and gas detection system included an Emergency Shutdown System designed to initiate certain shutdown actions. Some aspects of the Shutdown system were automatic; others required manual activation. Given that the HORIZON was a dynamically positioned MODU that relied on its thrusters to maintain position as well as drive off the well if needed, the Court finds that the configuration of the Emergency Shutdown System was not improper. Moreover, given the large amount of gas that reached the HORIZON and the multiple potential ignition points, it does not appear that these features, even if properly functioning and set entirely on automatic mode, would have prevented the explosions.

ii. Rig Maintenance

464. There was extensive testimony regarding the condition of the HORIZON.

465. There is no dispute that there were a number of overdue maintenance tasks on the HORIZON on April 20, 2010. It is also clear that the HORIZON's maintenance crew had struggled over the years to keep up with maintenance.

466. However, other than the matters that have been already pointed out (e.g., the BOP control pod batteries), the maintenance issues did not cause the blowout, explosion, and oil spill.

M. Process Safety

467. There was much evidence and testimony at trial concerning process safety.

468. Process safety management is a disciplined, highly organized set of approaches and strategies designed to prevent catastrophic failures involving complex engineered, human-based systems. It attempts to prevent, control, and mitigate major accidents, including fires and explosions, and the uncontrolled release of toxic chemicals or hydrocarbons. A proper process safety management system includes components dedicated to hazard identification, risk analysis, and risk management. Whereas personal safety focuses on preventing injuries to individuals from slips, trips, and falls, and is more synonymous with occupational safety, process safety relates to hazards that can cause or contribute to major accidents.

469. Having considered the evidence, the Court finds that BP had a process safety management system in place on April 20, 2010 and that it applied to the Macondo well and the DEEPWATER HORIZON, even if it "applied" to the HORIZON by virtue of adopting and "bridging" the contractor's safety management system. It may not have been perfect, but the evidence has not shown that it was defective or a cause of the blowout, explosion, and fire.

IV. CONCLUSIONS OF FACT AND LAW [155]

470. As explained in the Findings of Fact, the Phase One trial concerned two cases within this Multidistrict Litigation: the Transocean entities' limitation action (Civ. A. No. 10-2771) and the United States' claims under the Clean Water Act ("CWA")[156] and Oil Pollution Act of 1990 ("OPA") (Civ. A. No. 10-4563). The Phase One trial addressed fault allocation for the loss of well control, blowout, explosion, fire, and oil spill. This includes determining if any Defendant engaged in misconduct in excess of ordinary negligence. The Phase One trial also addressed Transocean's limitation defense, as well as various claims and defenses between and among the several Defendants. The Phase One trial did not address efforts to stop the spill or how much oil entered the water, which are subjects of the Phase Two trial. Phase One also did not address the amount of any civil penalties owed under the CWA, which is the subject of the "Penalty Phase" currently scheduled for January 20, 2015.

A. Jurisdiction

471. The Court previously ruled that the DEEPWATER HORIZON was a "vessel," as that term is used in maritime law, even though it was temporarily attached to the Macondo well by the BOP stack and marine riser—both appurtenances of the vessel—when the blowout, explosions, and fire occurred.[157]

---

[155] Some of the conclusions listed here are factual determinations, others are legal conclusions. Factual and legal conclusions shall be treated as such, regardless of how they are labeled.

[156] The CWA is also known as the Federal Water Pollution Control Act.

[157] Order and Reasons [As to the Motions to Dismiss the B1 Master Complaint] at 4-7, Rec. Doc. 3830, 808 F. Supp. 2d 943, 949-50 (E.D. La. Aug. 26, 2011). The Fifth Circuit Court of Appeals has also held that the DEEPWATER HORIZON is a vessel. *See In Re: Deepwater Horizon*, 745 F.3d 157, 166 (5th Cir. Feb. 24, 2014), *petition for cert. filed*, 82 U.S.L.W. 3698 (May 23, 2014) (13-1424); *see also In re Deepwater Horizon*, -- F.3d --, 2014 WL 2519040 (5th Cir. June 4, 2014) (repeatedly referring to the DEEPWATER HORIZON as a "vessel").

472. The Court also previously ruled that there is admiralty jurisdiction, 28 U.S.C. § 1333(1), and jurisdiction under the Outer Continental Shelf Lands Act ("OCSLA"), 43 U.S.C. § 1349, over Transocean's limitation action and the claims asserted therein.[158]

473. The evidence from the Phase One trial lends further support to these rulings.

474. Although not previously stated, the Court finds there is admiralty and OCSLA jurisdiction over the United States' claims as well. The United States' claims also give rise to jurisdiction under the CWA, 33 U.S.C. § 1321(b)(7)(E) & (n), and OPA, 33 U.S.C. § 2707(b).

B. Liability Under the Clean Water Act

475. The United States seeks civil penalties against BP Exploration & Production, Inc. ("BPXP") for violating the CWA, 33 U.S.C. § 1321(b)(7). BPXP is the only BP entity named as a defendant in the United States' complaint.[159]

476. The CWA imposes a civil penalty upon "[a]ny person who is the owner, operator, or person in charge of any vessel, onshore facility, or offshore facility from which oil . . . is discharged in violation of paragraph (3) . . . ."[160]

---

[158] Order at 8, Rec. Doc. 470, 747 F. Supp. 2d 704, 708-09 (E.D. La. Oct. 6, 2010); Order and Reasons [As to the Motions to Dismiss the B1 Master Complaint] at 7-8, Rec. Doc. 3830, 808 F. Supp. 2d 943, 951 (E.D. La. Aug. 26, 2011); Amended Order and Reasons [As to the Motions to Dismiss the B3 Master Complaint] at 5-6, Rec. Doc. 4209, 2011 WL 4575696 at *3 (E.D. La. Oct. 4, 2011); Order and Reasons [As to the Motions to Dismiss the Pure Stigma, BP Dealer, and Recreation Claims] at 22, Rec. Doc. 7526, 902 F. Supp. 808, 824 (E.D. La. Oct. 1, 2012). The Fifth Circuit has held that there is admiralty jurisdiction and/or OCSLA jurisdiction over claims by Louisiana coastal parishes for injuries to wildlife in Louisiana waters that were allegedly caused by the oil spill. *See In Re: Deepwater Horizon*, 745 F.3d 157, 163-64, 166 (5th Cir. Feb. 24, 2014), *petition for cert. filed*, 82 U.S.L.W. 3698 (May 23, 2014) (13-1424).

[159] The United States also sued Transocean and BP's co-lessees, MOEX and Anadarko, for CWA violations. However, Transocean and MOEX settled with the United States. Anadarko and MOEX were not parties to the Phase One trial. Accordingly, the Court does not address here the CWA liability *vel non* of Transocean, MOEX, or Anadarko.

[160] 33 U.S.C. § 1321(b)(7)(A). Paragraph (3) prohibits the discharge of "harmful" quantities of oil into covered waters or in connection with OCSLA activities. *Id.* § 1321(b)(3). This includes discharges that "[v]iolate applicable water quality standards" or "[c]ause a film or sheen upon or discoloration of the surface of the water or adjoining shorelines or cause a sludge or emulsion to be deposited beneath the surface of the water or upon adjoining shorelines." 40 C.F.R. § 110.3(b). It is not disputed that this oil spill violated paragraph (3).

477. The Court previously held that BPXP is liable for civil penalties under the CWA, as it was the "owner" of an "offshore facility" (the Macondo well) "from which oil discharged."[161]

478. The Court's prior ruling did not determine the amount of the CWA penalty, and the Court does not do so today. What is decided here is whether or not the discharge "was the result of gross negligence or willful misconduct," which determines the maximum amount of the penalty.[162]

479. In the absence of gross negligence or willful misconduct (i.e., if the defendant acted with ordinary negligence or was not negligent), the maximum amount of the CWA civil penalty is $1,100 per barrel of oil discharged.[163] However, the maximum amount per barrel is nearly quadrupled when the discharge results from gross negligence or willful misconduct.[164]

480. As explained below, the Court finds and concludes that the discharge of oil was the result of BPXP's "gross negligence" and "willful misconduct" under the CWA.

i. Legal Standard Re: "Gross Negligence" and "Willful Misconduct"

481. Formulating the standard for gross negligence or willful misconduct is an issue of law. Determining whether or not BPXP's conduct amounted to negligence, gross negligence, or willful misconduct is an issue of fact.[165]

---

[161] Order and Reasons [As to the Cross-Motions for Partial Summary Judgment Regarding Liability under the CWA and OPA] at 23-24, Rec. Doc. 5809, 844 F. Supp. 2d 746, 761 (E.D. La. Feb. 22, 2012). A panel of the Court of Appeals recently affirmed this ruling. *In re Deepwater Horizon*, --- F.3d ---, 2014 WL 2519040 (5th Cir. June 4, 2014). Petitions for rehearing were pending at the time of this writing.

[162] 33 U.S.C. § 1321(b)(7)(D).

[163] The statutory amount is $1,000 per barrel. 33 U.S.C. § 1321(b)(7)(A). Federal regulations increased this to $1,100. 40 C.F.R. § 19.4; 33 C.F.R. § 27.3.

[164] The statutory maximum in the case of gross negligence or willful misconduct is $3,000. 33 U.S.C. § 1321(b)(7)(D). One federal regulation increased this amount to $4,000. A different regulation increased it to $4,300. 40 C.F.R. § 19.4; 33 C.F.R. § 27.3. The Court does not decide at this time which regulation applies.

[165] *See United States v. Citgo Petroleum Corp.*, 723 F.3d 547, 556 (5th Cir. 2013); 57A Am. Jur. 2d *Negligence* § 136.

482. The CWA does not define "gross negligence or willful misconduct." The United States and BP disagree over the meaning of "gross negligence," but more or less agree over the meaning of "willful misconduct."

483. The Government urges that gross negligence, like ordinary negligence, requires only objective, not subjective, proof. While ordinary negligence is a failure to exercise the degree of care that someone of ordinary prudence would have exercised in the same circumstances, gross negligence is an extreme departure from the care required under the circumstances or a failure to exercise even slight care. Thus, the United States contends that gross negligence differs from ordinary negligence only in degree, not in kind.

484. BP urges that gross negligence has objective and subjective elements. Like the United States, BP contends that gross negligence requires an extreme departure from the ordinary standard of care (objective element). However, BP also claims that the actor must have what BP calls a "culpable mental state" (subjective element). According to BP, the subjective element requires that the actor must have actual, subjective awareness of the risk involved, but nevertheless proceed with conscious indifference to the rights, safety, or welfare of others.

485. The United States and BP generally agree over the meaning of "willful misconduct."

486. According to the Government, willful misconduct is

> an act, intentionally done, with knowledge that the performance will probably result in injury, or done in such a way as to allow an inference of a reckless disregard of the probable consequences. If the harm results from an omission, the omission must be intentional, and the actor must either know the omission will result in damage or the circumstances surrounding the failure to act must allow an implication of a reckless disregard of the probable consequences.[166]

[166] United States' Proposed Conclusion of Law ¶ 10, Rec. Doc. 10460-2 (quoting *Tug Ocean Prince, v. United States*, 584 F.2d 1151, 1163 (2d Cir. 1979)) (emphasis omitted).

487. BP claims that willful misconduct, like gross negligence, requires a culpable state of mind; however, willful misconduct "entails an even more culpable state of mind than 'gross negligence.'" BP states that "[w]illful misconduct includes the defendant actually intending to cause injury (actual intent), as well as the defendant knowing that its conduct will naturally or probably cause injury (constructive intent or recklessness)."[167]

488. Restating the parties' positions in terms of "recklessness" helps frame the issue. Courts often use "reckless" to refer to conduct that "is not intentional or malicious, nor is it necessarily callous toward the risk of harming others, as opposed to unheedful of it."[168] Under BP's proposed rubric, "gross negligence" and "recklessness" are treated as synonyms; BP's definition of "willful misconduct" also includes reckless conduct, but extends to intentional misconduct as well. Thus, BP places reckless conduct in both "gross negligence" and "willful misconduct." The United States avoids this overlap by confining "reckless" to "willful misconduct" (which, like BP's definition, also extends to intentional conduct).

489. Turning to the statutory language, the Court notes that the phrase "gross negligence or willful misconduct" is disjunctive, which suggests that these terms have distinct meanings under the statute. This tends to support the United States' position.

490. OPA's text makes clear that "gross negligence" and "willful misconduct" are distinct forms of conduct. One section of OPA states that "gross negligence or willful misconduct" will lift the limits of liability.[169] Another section of OPA states that "willful misconduct" by a responsible party will provide the responsible party's guarantor with a defense

---

[167] BP's Proposed Conclusions of Law ¶ 2740, Rec. Doc. 10467 (emphasis omitted).

[168] *Exxon Shipping Co. v. Baker*, 554 U.S. 471, 493-94 (2008) (citing Restatement (Second) of Torts § 500, cmt. a (1977) ("'Recklessness may consist of either of two different types of conduct. In one the actor knows, or has reason to know ... of facts which create a high degree of risk of ... harm to another, and deliberately proceeds to act, or to fail to act, in conscious disregard of, or indifference to, that risk. In the other the actor has such knowledge, or reason to know, of the facts, but does not realize or appreciate the high degree of risk involved, although a reasonable man in his position would do so'")); *accord* 57A Am. Jur. *Negligence* § 274.

[169] 33 U.S.C. § 2704(c)(1)(A).

to liability, without reference to "gross negligence."[170] Because only "willful misconduct" creates this defense, OPA treats "willful misconduct" as distinct from, and more egregious than, "gross negligence."[171]

491. "Gross negligence" and "willful misconduct" have the same meanings under OPA and the CWA.[172] Thus, the CWA also treats "willful misconduct" as conduct distinct from, and more egregious than, "gross negligence."

492. Because "gross negligence" and "willful misconduct" are distinct under the CWA, "reckless" conduct cannot be included in both terms. Given that the United States and BP agree that reckless conduct is included in "willful misconduct,"[173] reckless conduct cannot be included in "gross negligence." Therefore, the United States' definitions must be correct.

493. The "cluster of ideas" surrounding gross negligence also supports this conclusion. When Congress inserts a legal term of art into a statute, "it presumably knows and adopts the cluster of ideas that were attached to each borrowed word in the body of learning from which it was taken and the meaning its use will convey to the judicial mind unless otherwise instructed."[174] A related idea is that courts:

---

[170] 33 U.S.C. § 2716(f)(1)(C).

[171] *See Russello v. United States*, 464 U.S. 16, 23 (1983) ("[W]here Congress includes particular language in one section of a statute but omits it in another section of the same Act, it is generally presumed that Congress acts intentionally and purposely in the disparate inclusion or exclusion." (citation and quotations omitted; alteration in original)).

[172] It is no coincidence that OPA and the CWA both use "gross negligence or willful misconduct." Prior to OPA, the CWA's standard for increased maximum penalties was "***willful*** negligence or willful misconduct." 33 U.S.C. § 1321(b)(6)(B) (1988) (emphasis added). OPA changed this to "***gross*** negligence or willful misconduct." Pub. L. 101-380, § 4301(b)(D), 104 Stat. 484, 537 (1990) (emphasis added); *see also* H.R. Rep. No. 101-653, at 52 (1990) (Conf. Rep.), *reprinted in* 1990 U.S.C.C.A.N. 779, 832. *See also Water Quality Ins. Syndicate v. United States*, 552 F. Supp. 2d 220, 229 (D.D.C. 2007) (relying on case law interpreting "willful misconduct" under the CWA to interpret that phrase under OPA); 82 C.J.S. *Statutes* § 476 (2014) (statutes relating to the same subject matter "generally should be read as together constituting one law and should be harmonized if possible").

[173] The cases interpreting "wilful misconduct" under the CWA and OPA support the conclusion that the term includes reckless conduct. *See Tug Ocean Prince, Inc. v. United States*, 584 F.2d 1151, 1163 (2d Cir. 1978)); *Water Quality Ins. Syndicate v. United States*, 522 F. Supp. 2d 220, 229 (D.D.C. 2007).

[174] *Morissette v. United States*, 342 U.S. 246, 263 (1952).

> . . . generally assume, in the absence of a plain indication to the contrary, that Congress when it enacts a statute is not making the application of the federal act dependent on state law. That assumption is based on the fact that the application of federal legislation is nationwide and at times on the fact that the federal program would be impaired if state law were to control.[175]

Because the CWA is a federal statute that applies uniformly across all states, interpreting the statutory terms "gross negligence" and "willful misconduct" is a matter of federal law and should be based on a uniform interpretation of the terms, as opposed to, for example, the tort law of the state where the conduct or spill occurred.[176] A court may look generally to states' laws in an effort to divine the "cluster of ideas" surrounding a term like "gross negligence," but it should not cherry-pick the law of a particular state.[177]

494. Both BP and the United States find cases that support their proposed definitions of "gross negligence."[178] This is unsurprising considering that "'[g]ross negligence' is a nebulous term that is defined in a multitude of ways, depending on the legal context and the jurisdiction."[179] However, when the "cluster of ideas" surrounding "gross negligence" is considered, the prevailing notion is that gross negligence differs from ordinary negligence in terms of degree, and both are different in kind from reckless, wanton, and willful misconduct.[180]

---

[175] *Jerome v. United States*, 318 U.S. 101, 104 (1943).

[176] *See Resolution Trust Corp. v. Diamond*, 45 F.3d 665, 671-72 (2d Cir. 1995).

[177] Likewise, to the extent there is an established definition of "gross negligence" under maritime law, it should not apply to the CWA if the definition is inconsistent with the "cluster of ideas" surrounding that term. This is because admiralty jurisdiction and jurisdiction under the CWA are not identical. For example, it is conceivable that admiralty jurisdiction would not apply to an oil spill from an onshore facility into navigable waters, but the CWA would. Thus, just as no single state's law should define a standard that will apply in other states, maritime law also should not necessarily define a statutory term that will sometimes apply outside admiralty's scope.

[178] It should be pointed out, however, that BP largely relies on cases applying Texas law and/or did not concern the CWA. The United States cites cases that actually interpreted the CWA or OPA, among other sources.

[179] 57A Am. Jur. 2d *Negligence* § 227 (footnotes omitted); *see also id* § 257 ("The term 'willful misconduct is not immutably defined, but takes its meaning from the context and purpose of its use; while its general contours are similar in all contexts, it may differ depending on the common-law rule or statute to which it is relevant, and perhaps even within such rule or statute depending on the facts." (footnotes omitted)).

[180] *See id.* § 227 ("In gross negligence, the element of culpability which characterizes all negligence is magnified to a high degree as compared with that present in ordinary negligence. . . . 'Gross negligence is ***commonly*** defined as very great or excessive negligence, or as the want of, or failure to exercise, even slight or scant care or 'slight diligence.' . . . In ***some*** jurisdictions, the term 'gross negligence' also encompasses conduct that 'smacks of intentional wrongdoing.'"); *Id.* § 231 ("A distinction is ***frequently*** made between gross negligence and

495. Additional support comes from the fact that the pre-OPA version of the CWA used "***willful*** negligence or willful misconduct" as the standard for enhanced civil penalties.[181] The Fourth Circuit interpreted "willful negligence" to mean "reckless disregard for the probable consequences of a voluntary act or omissions."[182] The fact that OPA replaced "willful negligence" with "gross negligence" suggests that Congress intended a different and lower standard to apply—particularly when considered with the fact that one purpose of OPA was to increase the deterrent effect civil penalties would have on oil spills.[183]

---

willful, wanton, or reckless conduct. While the jurisdictions adopting this distinction consider gross negligence substantially and appreciably higher in magnitude than ordinary negligence, it is still not equivalent to wanton or willful conduct and it does not encompass reckless behavior. . . . Negative in nature, [gross negligence] implies an absence of care. Willful misconduct, on the other hand, requires an intentional act or an intentional failure to act, either with knowledge that serious injury is a probable result, or with a positive and active disregard for the consequences."); *Id.* § 233 ("While, in theory, gross negligence and willful and wanton misconduct are distinct concepts with different legal bases, in practice there has been much confusion and unfortunate overlap between the two doctrines. Part of the difficulty stems from the fact that the labels are sometimes used interchangeably, with 'gross negligence' defined in 'willful and wanton misconduct' terms. The designation of wanton acts as 'gross negligence' is a misnomer, because such acts are not negligence at all."); *Id.* § 235 ("In ***some*** jurisdictions, gross negligence is characterized by conscious indifference to or reckless disregard of the rights, safety, or welfare or others, or to the probable consequences of one's acts."); *Id.* § 244 ("***Many*** jurisdictions consider willful, wanton, or reckless conduct to be conduct of a different kind than negligence. Thus, it has been said that willful, malicious, or intentional misconduct is not properly speaking, within the meaning of 'negligence,' ***however gross***, when 'negligence' is used as a term of art."); Restatement (Third) of Torts § 2, Cmt. a (2010) ("Taken at face value, this term [gross negligence] simply means negligence that is especially bad. Given this literal interpretation, gross negligence carries a meaning that is less than recklessness."); *Prosser and Keeton on the Law of Torts* § 34, at 211012 (5th ed. 1984) ("As it originally appeared, [gross negligence] was very great negligence, or the want of even slight or scant care. . . . Several courts, however, dissatisfied with a term so nebulous . . . have construed gross negligence as requiring willful, wanton, or reckless misconduct, or such utter lack of all care as will be evidence thereof . . . But it is still true that ***most*** courts consider that 'gross negligence' falls short of a reckless disregard of the consequences, and differs from ordinary negligence only in degree, and not in kind."). Emphasis in the foregoing parentheticals has been added; footnotes have been omitted. Additional support can be found in *Baker*, where the Supreme Court, after surveying punitive damage cases from across the nation, appeared to view gross negligence as a concept distinct from, and less blameworthy than, recklessness. *See Baker*, 554 U.S. at 512 (1990) ("These studies cover cases of the most as well as the least blameworthy conduct triggering punitive liability, from malice and avarice, down to recklessness, and even gross negligence in some jurisdictions.").

[181] *See supra* note 172.

[182] *Steuart Transp. Co. v. Allied Towing Corp.*, 596 F.2d 609, 614 (4th Cir. 1979); *accord* 57A Am. Jur. 2d *Negligence* §§ 270, 271.

[183] This purpose is reflected in the fact that OPA dramatically increased the amount of CWA civil penalties and removed the requirement for enhanced penalties that the extra-negligent conduct be within the owner's "privity and knowledge." *Cf.* 33 U.S.C. § 1321(b)(6)(B) (1988). This purpose is also apparent from the legislative history. *See* H.R. Rep. No. 101-653, at 51-52 (1990) (Conf. Rep.), *reprinted in* 1990 U.S.C.C.A.N. 779, 832-33 ("[T]he Conference agreement increases penalties under the Federal Water Pollution Control Act for discharge of oil . . . . Typically, oil spills involve a large element of human error. Civil penalties should serve primarily as an additional incentive to minimize and eliminate human error and thereby reduce the number and seriousness of oil spills. There

496. BP attempts to find support in the congressional debates over OPA. BP quotes Representative Synar, who remarked, "'[G]ross negligence and willful misconduct . . . is conduct that is intended to injure or is reckless, showing the wanton disregard for the harm to others which is the likely result of a certain course of action or activity. . . . The[se] are extraordinarily difficult to prove.'"[184] However, BP omits language that supports the Government's position. BP's second set of ellipses replaced the Representative's comments that "Gross negligence is considered by the courts to be an extreme departure from reasonable conduct. Willful misconduct requires proof of an element of conscious intent."[185] Likewise, BP quotes Representative Miller, who said, "Both [gross negligence and willful misconduct] are very difficult to prove," but BP fails to mention the very next sentence, "Prosser on Torts describes gross negligence as the failure to exercise even that care which a careless person would use."[186] Nor does BP mention Representative Gejdenson's statement, "[T]he definition of gross negligence that this legislation uses to determine whether the liability caps are broken is: 'A. The failure to exercise a standard of care which even a careless person would exercise.'"[187] When considered as a whole, the most BP could fairly state about these debates is that they provide conflicting views on how gross negligence is defined.

497. After post-trial briefing was complete, the Fifth Circuit issued its opinion in *United States v. Citgo Petroleum Corp.*[188] There the question of how "gross negligence" is

---

are strong operational and economic incentives within the Conference substitute that should encourage responsible parties to prevent oil spills.").

[184] BP Post Trial Br. at 10, Rec. Doc. 10466 (quoting 135 Cong. Rec. 27,986 (Rep. Synar)) (bracketed alterations and ellipses supplied by BP).

[185] 135 Cong. Rec. 27,986 (Rep. Synar).

[186] *Id.* at 27,977 (Rep. Miller).

[187] *Id.* at 27,979 (Rep. Gejdenson).

[188] 723 F.3d 547 (5th Cir. 2013).

defined under the CWA was presented.[189] However, *Citgo*'s answer is vague, as explained in the margin.[190]

498. For the reasons stated, the Court believes that the United States provides the correct definitions of "gross negligence" and "willful misconduct" for purposes of the CWA. However, because it is unclear what standard *Citgo* may have applied, the Court will also assume that "gross negligence" is equivalent to "recklessness" and analyze the facts under that standard as well.

ii. Findings Re: "Gross Negligence" or "Willful Misconduct" (Single Act)

499. Based on the Court's findings and as further explained below, the Court concludes that the discharge of oil "was the result of gross negligence or willful misconduct" by BPXP under the CWA, 33 U.S.C. § 1321(b)(7)(D). The Court finds that BPXP acted

---

[189] *See id.* at 554-55.

[190] *Citgo* concerned the United States' CWA civil penalty claim against a refinery owner after its wastewater storage tanks failed and discharged oil into surrounding waterways. The district court began its analysis of whether the defendant's conduct amounted to gross negligence by stating, "Under Louisiana law, gross negligence is willful, wanton, and reckless conduct that falls between intent to do wrong and ordinary negligence." *Id.* at 554 (internal quotes and alterations omitted). The district court concluded that the defendant was negligent, but not grossly negligent. The United States argued on appeal that the lower court erroneously applied a state-law standard that equated gross negligence with willful misconduct.

The Fifth Circuit's response began with language that could be interpreted as equating "gross negligence" with "willful, wanton, or reckless conduct," which would tend to support BP's position:

> "Gross negligence" is a label that straddles the divide between intentional and accidental actions. The Louisiana Supreme Court has said that "often [there is] no clear distinction between such willful, wanton, or reckless conduct and 'gross' negligence, and the two have tended to merge and take on the same meaning." We see no error in the district court's articulation of its understanding of this term that is neither fish nor foul.

Id. (quoting *Brown v. ANA Ins. Grp.*, 994 So. 2d 1265, 1269 n.7 (La. 2008). However, *Citgo* concludes its discussion with language that appears to reject the Louisiana law definition:

> It does not appear that the district court relied on the state-law definition anyway. After it offered the state-law definition of gross negligence, the district court stated that "it does not find that CITGO's actions or inactions rise to the level of gross negligence or willful misconduct" and "the Court finds no gross negligence or willful misconduct on the part of CITGO." Given these subsequent statements, we conclude the district court applied the correct legal standard.

Id. at 554-55.

"recklessly;" therefore, regardless of whether the CWA's definition of "gross negligence" is the same as or lesser than "recklessness," that standard is met. Additionally, because it is undisputed that "willful misconduct" includes "reckless" conduct, that standard is also met.

500. The Court is mindful of the concept that "[a] greater degree of care is required when the circumstances present a greater apparent risk."[191] A corollary here is that similar actions or omissions may be judged as meeting the standard of care, or falling just below the standard of care, or an extreme departure from the standard of care, depending on the context in which the action or omission occurred.[192]

501. Turning to the case at bar, the industry and BP recognized that a blowout, explosion, and oil spill are potential harms associated with offshore drilling. Obviously, the magnitude of this potential harm is great in terms of severity, which in turn raises the standard of care.[193]

502. The Macondo well was drilled in deepwater, which adds certain complexities not found in shallower waters or onshore. Furthermore, the high pressure and high temperature characteristics of the geological formation into which the Macondo well was drilled added

---

[191] *See Water Quality Ins. Syndicate v. United States*, 632 F. Supp. 2d 108, 112 (D. Mass. 2009) (citation omitted) (interpreting "gross negligence" under OPA); Restatement (Third) of Torts § 2, cmt. d (2010) ("[I]f the [magnitude of the foreseeable] risk [of harm] is ***somewhat*** greater than the burden [of precautions that can eliminate the risk], the actor is negligent for failing to adopt the precaution. . . . When, however, the imbalance between the magnitude of the foreseeable risk and the burden of precaution becomes ***sufficiently large***, that imbalance indicates that the actor's conduct is substantially worse than ordinary negligence." (emphasis added)).

[192] Justice Story illustrated this point with his "bag of apples." *See Tracy v. Wood*, 24 F. Cas. 117 (Story, Circuit Justice, C.C.D.R.I. 1822) (No. 14,130) (bailment case) ("If a bag of apples were left in a street for a short time, without a person to guard it, it would certainly not be more than ordinary neglect. But if the bag were of jewels or gold, such conduct would be gross negligence. In short, care and diligence are to be proportional to the value of the goods, the temptation and facility of stealing them, and the danger of losing them.").

[193] This is partially reflected in the MMS regulations, which required BPXP to, *inter alia*, "protect health, safety, property, and the environment by . . . [p]erforming all operations in a safe and workmanlike manner," 30 C.F.R. § 250.107(a), "use the best available and safest technology . . . whenever practical on all exploration, development, and production operations," *id.* § 250.107(c), "take measures to prevent unauthorized discharge of pollutants into the offshore waters [and] . . . not create conditions that will pose unreasonable risk to public health, life, property, aquatic life, wildlife, [etc.]," *id.* § 250.3000, and "take necessary precautions to keep wells under control at all times [including] . . . use[ing] the best available and safest drilling technology to monitor and evaluate well conditions and minimize the potential for the well to flow or kick," *id.* § 250.401.

complexity that is not present in all deepwater wells. These features increased the chance that a blowout, explosion, and oil spill would occur, which, in turn, further raises the standard of care.[194]

503. This is not to say that every activity on a MODU or decision relating to a deepwater well is of a nature that any unreasonable act or decision is automatically treated as an extreme departure from the standard of care.[195] The negative pressure test, however, was a particularly critical part of the temporary abandonment operation.[196] As previously explained, the negative pressure test is a safety-critical test. Its purpose was to determine whether the cement and casing had successfully isolated the well from the reservoir, so that the heavy drilling mud—which otherwise prevented hydrocarbons from flowing into the well—could be safely removed. Therefore, the risk of foreseeable harm associated with misinterpreting a negative pressure test was great both in terms of severity and probability.

504. Furthermore, interpreting the negative pressure test is relatively straightforward. It is a "pass-or-fail" test; inconclusive or contradictory results mean the test has failed. This reduces the likelihood that a misinterpretation is an "honest mistake" or "mere inadvertence."[197]

---

[194] Indeed, Dr. Tony Hayward, the C.E.O. of BP p.l.c. in 2010 (and who began his career with BP as a geologist), described deepwater mineral exploration as "akin to outer . . . space exploration." Hayward Deposition, 872:8-11. Dr. Hayward estimated that BP was drilling roughly 20 deepwater wells around the world on April 20, 2010. *Id.* 873:6. He further estimated that, at most, 5 of these wells were considered "higher risk" due to the nature of their geologic formation. *Id.* at 875:1-19. BP classified Macondo as one of these 5 "higher risk" deepwater wells.

[195] *See, e.g.*, *Houston Exploration Co. v. Halliburton Energy Servs., Inc.*, 269 F.3d 528, 532-33 (5th Cir. 2001) (holding under Louisiana law that a tool operator's failure to verify that a valve had been pinned, which resulted in a blowout, did not constitute gross negligence because, *inter alia*, the record did not show that a tool operator would anticipate that an improperly pinned valve would contribute to a well blowout, given that the valve at issue was not designed to function as a well control device).

[196] The negative pressure test is discussed in Parts III.H.ii-v, *supra*.

[197] Mere inadvertence or honest mistake do not amount to gross negligence under any standard. *See, e.g.*, *Houston Exploration*, 269 F.3d at 532 (noting under Louisiana law that "[m]ere inadvertence or honest mistake does not amount to gross negligence."); 57A Am. Jur. 2d *Negligence* § 227 ("'Gross negligence' means more than momentary thoughtlessness, inadvertence or error of judgment . . . ." (footnotes omitted)).

505. BP, as the operator, was ultimately responsible for interpreting the negative pressure test and declaring it a success or failure. Don Vidrine, the BP Well Site Leader on the rig, concluded the test was successful and instructed the Transocean rig crew to fully displace the well to seawater, despite the fact that he would later tell investigators that the results looked "squirrely" to him. All of the experts—even BP's—agree that Vidrine's interpretation was erroneous and that the test could not be deemed successful. A reasonable company man[198] in Vidrine's situation would have concluded that the test was a failure and that it needed to be reconducted based on the anomalous pressure reading.

506. Moreover, about an hour after the test concluded, Mark Hafle, BP's senior drilling engineer in Houston, told Vidrine essentially that the test could not be considered a success given the inconsistent pressure readings. At this point, Vidrine should have been well-aware that the negative test had failed. Significantly, when that conversation ended at 9:02 p.m., there were approximately 36 minutes before the critical moment when hydrocarbons rose above the BOP—plenty of time for Vidrine or Hafle to halt the displacement and order a new negative pressure test.

507. At 9:08 p.m., the displacement did stop, not because anyone wanted to re-conduct the negative pressure test, but for a sheen test. Vidrine had to approve the sheen test before displacement would resume. Thus, the sheen test provided a perfect opportunity for Vidrine to order a new negative pressure test. Instead, at 9:14 p.m., Vidrine—having the benefit of Hafle's crucial observation about the negative pressure test—affirmatively ordered that displacement resume.

508. Mark Hafle also did not order that the negative pressure test be reconducted. Granted, Hafle may have lacked some context given that he was in BP's Houston office. To the

[198] Recall that "company man" is the industry term for "Well Site Leader." *Supra* note 43.

extent this was the case, Hafle could have easily informed himself of either the current state of the well or the earlier readings from the negative pressure test by merely looking to his computer, and then called the rig and ordered the displacement stopped and the test reconducted. Hafle did not do this, which is inexplicable considering not only his statements to Vidrine but also the fact that he felt there was little chance the cement job would succeed.[199]

509. The last sentence illustrates another point: context. As discussed, a negative pressure test conducted as part of a temporary abandonment of a deepwater well already demands a high level of care, but the actual circumstances surrounding the Macondo well pushed the standard of care even higher. Vidrine and Hafle, as well as other BPXP operational and engineering personnel, were well-aware that the Macondo well had been particularly troublesome to drill,[200] and difficulties continued throughout the temporary abandonment process. Notably, BPXP personnel, including but not limited to Vidrine and Hafle, were aware of the problems with converting the float collar.[201] A foreseeable risk of these issues is that the cement would fail to achieve zonal isolation, either because the cement might u-tube back into the casing from the annulus (due to an unconverted float collar) or would not be placed in the appropriate place in the annulus (due to a casing breach). Vidrine and Hafle's knowledge of these difficulties and associated risks should have heightened their vigilance during the negative pressure test, given that it tests whether the cement and casing are providing a barrier to flow.

510. Vidrine and Hafle, along with other BPXP personnel, were also aware of BP decisions that added risks to either the cement job or the negative pressure test. These included: the decision to use fewer centralizers than recommended, which increased the risk of cement

[199] Recall that Hafle told BP investigators that he believed the cement job would be "shittie." *Supra* ¶¶ 194, 275.
[200] *Supra* Part III.C.ii.
[201] *Supra* Part III.F.ii.

channeling;[202] the decision not to conduct a full bottoms-up circulation prior to the cement job, which increased the risk of cement contamination and/or channeling;[203] the decision to pump a low volume of cement, which increased the risk that cement would not be placed appropriately;[204] the decision to pump foamed cement containing destabilizing agents without a successful stability test, which increased the risk of nitrogen breakout and cement failure;[205] the decision to pump foamed cement at a low rate and in a synthetic oil based mud environment, which increased the risk of cement contamination, nitrogen breakout, and failure;[206] the decision to forego a CBL following the cement job, which placed increased importance on the negative pressure test given that it was the only remaining tool that could evaluate the effectiveness of the cement;[207] and the decision to use an unorthodox LCM spacer during the displacement, which increased the risk that apertures in the BOP could become clogged.[208] While not all of these decisions may have contributed to the ultimate mode of failure, and perhaps not all were necessarily unreasonable decisions (at least when viewed in isolation), each of these decisions and their associated risks should have increased the caution surrounding the negative pressure test beyond the "high alert" status it already demanded.

511. Under the definition relied upon by the United States, "gross negligence" is an extreme departure from the care required under the circumstances or a failure to exercise even a slight care. For the reasons explained, the negative pressure test at the Macondo well demanded a level of care exceeding the "high" care typically required during such a test. There is no dispute that this negative pressure test could not be considered a success. Vidrine should have

[202] *Supra* ¶ 192.
[203] *Supra* ¶ 192.
[204] *Supra* ¶ 193.
[205] *Supra* Part III.G.iv.
[206] *Supra* notes 80, 81.
[207] *Supra* Part III.F.vii.
[208] *Supra* Part III.H.v.

understood this even before he spoke with Hafle. Hafle's comments to Vidrine should have confirmed what Vidrine should have already understood. Conducting a new negative pressure test is a precaution that imposed an extremely light burden compared to the foreseeable consequences that could, and did, result from the misinterpretation. Consequently, Vidrine's misinterpretation of the negative pressure test and subsequent failure to order a new one following his conversation with Hafle constitutes an extreme departure from the care required under the circumstances. For similar reasons, Hafle's failure to order a new negative pressure test, or pursue the issue further with Vidrine, or, at the very least, investigate the situation from his computer, also constitutes an extreme departure from the care required under the circumstances.

512. The United States' and BP's definitions of "willful misconduct" and BP's definition of "gross negligence" are essentially the same as "recklessness," although "willful misconduct" may also include intentional misconduct. The *Restatement (Second) of Torts* provides the following definition of "reckless":

> The actor's conduct is in reckless disregard of the safety of another if he does an act or intentionally fails to do an act which it is his duty to the other to do, knowing or having reason to know of facts which would lead a reasonable man to realize, not only that his conduct creates an unreasonable risk of physical harm to another, but also that such risk is substantially greater than that which is necessary to make his conduct negligent.[209]

The comments further explain:

> Recklessness may consist of either of two different types of conduct. In one the actor knows, or has reason to know . . . of facts which create a high degree of risk of physical harm to another, and deliberately proceeds to act, or to fail to

[209] Restatement (Second) of Torts § 500 (1965). Although the Restatement (Third) has superseded this definition, the Court relies upon it because it was the version in effect when Congress passed OPA and because it was cited by the Supreme Court in *Baker*, 554 U.S. at 493-94. Although *Baker* concerned maritime law—which does not necessarily supply a standard under the CWA—it appears the Supreme Court drew its definition of "reckless" from the general common law. This Court notes, however, that the differences between the Restatement (Second) and Restatement (Third) are irrelevant for present purposes.

> act, in conscious disregard of, or indifference to, that risk. In the other the actor has such knowledge, or reason to know, of the facts, but does not realize or appreciate the high degree of risk involved, although a reasonable man in his position would do so.
>
> . . .
>
> For either type of conduct, to be reckless it must be unreasonable; but to be reckless, it must be something more than negligent. It must not only be unreasonable, but it must involve a risk of harm to others substantially in excess of that necessary to make the conduct negligent. It must involve an easily perceptible danger of death or substantial physical harm, and the probability that it will so result must be substantially greater than is required for ordinary negligence.[210]

513. The Court finds that before Vidrine spoke with Hafle, Vidrine likely knew of facts (the conflicting pressures during the negative pressure test) that would have led a reasonable company man in the industry to realize that deeming the negative pressure test "successful" and displacing the mud from the well would probably result in physical injuries, death, and severe property damage. After speaking with Hafle, Vidrine absolutely knew of facts that would lead a reasonable company man to believe that not stopping the displacement and conducting a new test would probably result in physical injuries, death, and severe property damage. However, Vidrine did not stop the displacement; instead, he affirmatively ordered that the displacement resume.

514. As to Hafle, he clearly understood that inconsistent pressures indicated the negative pressure test had failed, but he was arguably uncertain of the context. However, because he also understood the danger associated with misinterpreting this test, his failure to investigate, particularly given the ease with which he could have done so, similarly amounts to recklessness.

[210] *Id.* cmt. a.

515. Accordingly, Hafle and Vidrine acted "recklessly" with respect to the negative pressure test, which satisfies both parties' definitions of "willful misconduct" as well as BP's definition of "gross negligence" under the CWA.

iii. Findings Re: "Gross Negligence" or "Willful Misconduct" (Multiple Negligent Acts)

516. The analysis above focused on the negative pressure test as a single act of gross negligence and willful misconduct.

517. However, a series of negligent acts may also constitute gross negligence or willful misconduct under the CWA.[211]

518. Accordingly, the Court further finds and concludes that BPXP committed a series of negligent acts or omissions that resulted in the discharge of oil, which together amount to gross negligence and willful misconduct under the CWA. This is an additional and alternative grounds for finding BPXP's conduct amounted to gross negligence and willful misconduct.

519. BPXP's negligent acts that caused the blowout, explosion, and oil spill include: drilling the final 100 feet of the well with little or no margin,[212] running the production casing with the float collar in unconverted mode ***and*** without a shoe filter,[213] failing to verify whether the float collar converted by reverse circulating the well,[214] not conducting a CBL,[215] using LCM as a spacer for the displacement and negative pressure test,[216] misinterpreting the negative pressure test,[217] allowing simultaneous operations to occur during displacement,[218] and failing to

[211] *See Ocean Prince*, 584 F.2d at 1163-64 (interpreting "willful misconduct" under CWA's provision concerning liability for removal costs); 57A Am. Jur. 2d *Negligence* § 229 ("[S]everal connected or successive acts of simple negligence may support a finding of gross negligence, due to their compounding effect.").

[212] *Supra* Part III.C.ii.

[213] *Supra* ¶ 107.

[214] *Supra* Part III.F.ii.

[215] *Supra* Part III.F.vii.

[216] *Supra* Part III.H.v.

[217] *Supra* Part III.H.ii.-iv. For purposes of this analysis, the misinterpretation of the negative pressure test is considered to be merely negligent, rather than gross negligence or worse.

[218] *Supra* Part III.I.ix.

provide a displacement schedule to the Transocean drill crew.[219] Notably, the decisions regarding drilling the final 100 feet, the CBL, and LCM-spacer were profit-driven decisions.

520. These instances of negligence, taken together, evince an extreme deviation from the standard of care and a conscious disregard of known risks.

521. BPXP was also negligent by pumping foamed cement without a successful stability test.[220] Although cement instability did not cause the actual mode of failure (given the Court's conclusion that the cement was improperly placed through a breach in the shoe track), it is another instance of BP proceeding in the face of a known risk and therefore lends further support to the conclusion that BP's conduct was reckless.

iv. Attribution

522. BP asserts that BPXP cannot be held liable for enhanced penalties under the CWA when the gross negligence or willful misconduct was committed by its employees; instead, BPXP must have authorized or ratified this misconduct. BP contends this is the "traditional common-law rule" that applies to punitive damages, which, absent contrary statutory language, should also apply to the CWA. BP supports its position by pointing out that OPA explicitly attributes an agent's or employee's gross negligence or willful misconduct to the corporate principal or employer for purposes of removing liability caps,[221] but similar language does not appear in the CWA. BP claims that this shows that Congress deliberately chose not to deviate from the "traditional common-law rule" in the CWA.

523. The Court does not agree.

---

[219] *Supra* Part III.I.ix.

[220] *Supra* Part III.G.iv.

[221] *See* 33 U.S.C. § 2704(c)(1) (removing limited liability "if the incident was proximately caused by gross negligence or willful misconduct of . . . the responsible party, an agent or employee of the responsible party, or a person acting pursuant to a contractual relationship with the responsible party. . . .").

524. The CWA states, in pertinent part, "In any case in which a [discharge of oil] was the result of gross negligence or willful misconduct of a person described in subparagraph (A), the person shall be subject to [higher maximum civil penalties]."[222] Subparagraph (A) is the strict-liability penalty provision for non-negligent and negligent conduct. It states, "Any person who is the owner, operator, or person in charge of any vessel . . . or offshore facility from which oil . . . is discharged . . . shall be subject to a civil penalty in an amount up to . . . [$1,100]."[223]

525. "Person" is defined under the CWA to include "corporations" and contains no requirement to identify corporate management, officers, etc.[224] The enhanced penalty provision, § 1321(b)(7)(D), also does not require any specific level of corporate management; it merely refers back to the entities that can be held strictly liable under the CWA.

526. Congress could have added a requirement that corporate management, etc., be involved in order to obtain enhanced penalties, but it did not. In fact, Congress actually removed similar requirements from the CWA when it passed OPA.

527. Prior to OPA, the CWA's provision governing civil penalty actions established a two-tier penalty structure, similar in some respects to the one in effect today. Like the lower, strict-liability penalty in the current version, the pre-OPA CWA stated that "[a]ny owner, operator, or person in charge of any . . . offshore facility . . . [or] vessel from which oil . . . is discharged" was liable for a civil penalty not exceeding $50,000.[225] However, in order to access the higher maximum civil penalty of $250,000, the pre-OPA CWA required the Government to not only show that the discharge "was the result of willful negligence or willful misconduct," but also that this conduct was "***within the privity and knowledge*** of the owner, operator or person in

[222] 33 U.S.C. § 1321(b)(7)(D).
[223] 33 U.S.C. § 1321(b)(7)(A).
[224] 33 U.S.C. § 1321(a)(7) ("'person' includes an individual, firm, corporation, association, and a partnership").
[225] 33 U.S.C. § 1321(b)(6)(A),(B) (1988).

charge."[226] When OPA rewrote the CWA's civil penalty provisions, it removed the "privity and knowledge" language.

528. "Privity and knowledge" under the former version of the CWA meant the same as it does under the Limitation of Liability Act.[227] Courts applying the Limitation Act to corporate owners interpret "privity and knowledge" to mean "the privity and knowledge of a managing agent, officer, or supervising employee, including shoreside personnel."[228] Consequently, one of the most difficult issues that arise under the Limitation Act is whether the person responsible for the error is sufficiently high up in the corporate hierarchy that her acts or omissions will be deemed within the owner's "privity and knowledge."[229]

529. Thus, when OPA deleted "privity and knowledge" from the CWA, it removed a significant hurdle to accessing higher maximum penalties: no longer was the Government required to show that the extra-negligent conduct was committed by an employee of a certain rank or an agent with the requisite level of authority.[230] BP's argument would replace the hurdle Congress deliberately removed with one even higher.

530. Additionally, while the common-law rule regarding a corporation's punitive liability may have been clear over a century ago,[231] that was certainly not the case when Congress enacted the current version of the CWA's civil penalty provision, nor is it so today.[232]

---

[226] 33 U.S.C. § 1321(b)(6)(B) (1988) (emphasis added).

[227] 46 U.S.C. § 30505; *Steuart Transp. Co. v. Allied Towing Corp.*, 596 F.2d 609, 613 (4th Cir. 1979).

[228] 2 Thomas J. Schoenbaum, *Admiralty and Maritime Law* § 15-6, at 191 (5th ed. 2011) (collecting cases).

[229] *Id.* at 193.

[230] *Cf.* 135 Cong. Rec. 27,980 (Rep. Davis) (discussing OPA) ("We have removed the requirement that the willful negligence or willful misconduct be within the privity or knowledge of the responsible party as is required under other environmental laws. This will make it much easier to prove that a limit of liability should be breached.").

[231] *See Lake Shore & M.S. Ry. Co. v. Prentice*, 147 U.S. 101, 111-12 (1893) (applying general common law).

[232] *See, e.g.*, *Am. Soc'y of Mech. Eng'rs*, 456 U.S. 556, 575 n.14 (1982) (noting that "a majority of courts, however, have held corporations liable for punitive damages imposed because of the acts of their agents, in the absence of approval or ratification." (citations omitted)); *In re: P&E Boat Rentals, Inc.*, 872 F.2d 642, 650 (5th Cir. 1989) (noting that a majority of non-admiralty courts hold that the employer's vicarious liability extends to punitive

In fact, BP cites no cases that have applied its interpretation to the CWA, nor has the Court found any. BP relies heavily on the Fifth Circuit's decision in *In re: P&E Boat Rentals, Inc.*, which concerned punitive damages under maritime law.[233] As explained above, however, maritime law does not necessarily supply a standard for the CWA, which may not always overlap with admiralty jurisdiction.[234] Furthermore, other maritime circuits disagree with *P&E Boats*, and the Supreme Court was equally divided on this issue, which lends further supports to the point that by 1990, the general common law, and perhaps general maritime law as well, had changed considerably from the "traditional" rule.[235]

531. For these reasons, the Court concludes that a corporation is vicariously liable under the CWA's enhanced penalty provision for the gross negligence and/or willful misconduct of its employees. Consequently, the Court need not determine whether BPXP authorized or ratified the conduct, or whether Vidrine and Hafle (or any other BP employee) were "managerial agents," or any other attribution standard that may apply under general maritime law, "traditional" common law, or any other law or jurisdiction.

v. Causation

532. BP and the United States disagree over what level of causation is required under the CWA.

533. The relevant language of the CWA states, "In any case in which a [discharge] ***was the result of*** gross negligence or willful misconduct . . . ."[236]

534. The United States contends this language requires only "but for" causation. BP argues the language requires a "significant causal link" or "substantial nexus," based on the

---

damages, while some non-admiralty and admiralty courts require that the agent was employed in a managerial capacity, but most admiralty courts still require the employer to authorize or ratify the wanton act).

[233] 872 F.2d 642 (5th Cir. 1989).

[234] *Supra* note 177.

[235] *See Exxon Shipping Co. v. Baker*, 554 U.S. 471, 482-84 (2008).

[236] 33 U.S.C. § 1321(b)(7)(D).

Supreme Court's interpretation of an OCSLA provision that used similar language.[237] BP further asserts that these terms are akin to "proximate cause."

535. The Court need not decide this issue. Its conclusions regarding gross negligence and willful misconduct would satisfy a proximate cause standard, assuming such a standard applied.

vi. Additional Bases for BPXP's Clean Water Act Liability

536. The Court previously defined "operator" under the CWA.[238] That definition is restated here with slight modification: An "operator" "must manage, direct, or conduct operations specifically related to pollution, that is, operations having to do with the leakage or disposal of [oil], or decisions about compliance with environmental regulations."[239] "Person in charge" carries a similar definition.[240]

537. The evidence showed that BPXP was an "operator" and a "person in charge" of the offshore facility (the Macondo well) for purposes of the CWA. BP determined and directed all aspects of how the well would be designed and drilled, to what depth it would be drilled, the cementing process, and how and when temporary abandonment would take place.

538. The evidence similarly showed that BPXP was an "operator" and a "person in charge" of the "vessel" (the DEEPWATER HORIZON) for purposes of the CWA. BPXP was, for practical purposes, the time charterer of the HORIZON. BPXP directed the HORIZON where to go and to what depth it would drill. Thus, BPXP directed operations specifically related to oil pollution. The fact that the BP Well Site Leader had to approve the sheen test

---

[237] *See Pac. Operators Offshore, LLP v. Valladolid*, 132 S. Ct. 680, 691 (2012).

[238] Order and Reasons [As to the Cross-Motions for Partial Summary Judgment Regarding Liability under the CWA and OPA] at 23-24, Rec. Doc. 5809, 844 F. Supp. 2d 746, 761 (E.D. La. Feb. 22, 2012).

[239] *United States v. Bestfoods*, 524 U.S. 51, 66-67 (1998) (interpreting "operator" under the Comprehensive Environmental Response, Compensation, and Liability Act).

[240] *See United States v. Mobil Oil Corp.*, 464 F.2d 1124 (5th Cir. 1972) (defining "person in charge" under earlier version of Federal Water Pollution Control Act).

before fluids could be discharged overboard, rather than stored onboard, is a specific example of BPXP making a decision about compliance with environmental laws. Other examples abound, but this is sufficient to establish the point.

539. Accordingly, BPXP is liable under the CWA, even if it is later determined that the discharge was "from" the vessel and not the offshore facility.[241]

C. Liability Under General Maritime Law

i. Summary

540. Here the Court determines under general maritime law the comparative fault of BP, Transocean, and Halliburton for the blowout, explosions, and oil spill. The Court also determines whether any Defendant may be liable for punitive damages under general maritime law.

541. Here, "BP" refers to BP Exploration & Production Inc. and BP America Production Company, but not BP p.l.c. "Transocean" means Transocean Holdings LLC, Transocean Deepwater Inc., and Transocean Offshore Deepwater Drilling Inc., but not Transocean Ltd. or Triton Asset Leasing GmbH. "Halliburton" means Halliburton Energy Service, Inc. and Halliburton's Sperry division. BP, Transocean, and Halliburton are sometimes referred to collectively as "Defendants."

542. Based on the Court's findings and as further explained below, the Court concludes that each Defendant engaged in conduct that was negligent or worse and a legal cause of the blowout, explosion, and oil spill.

543. The Court further finds that BP's conduct was reckless. Transocean's conduct was negligent. Halliburton's conduct was also negligent.

---

[241] As mentioned above, the Court previously determined on summary judgment that the discharge was "from" the offshore facility for purposes of the CWA, and that BPXP was liable as an "owner" of that facility. BP and Anadarko appealed that ruling, arguing that the discharge was "from" the vessel. That appeal is pending at the time of this writing. *See supra* note 161 and accompanying text.

544. The Court further concludes that the comparative fault of the Defendants, expressed as a percentage of total liability, is as follows:

BP:	67%
Transocean:	30%
Halliburton:	3%

545. Finally, the Court finds that the conduct of BP's employees was egregious enough that exemplary or punitive damages would be appropriate. However, in light of Fifth Circuit precedent, the Court concludes that BP is not liable for punitive damages.

ii. Fault Allocation and Degree

546. The usual standard for stating a claim in negligence is that "the plaintiff must demonstrate that there was a duty owed by the defendant to the plaintiff, breach of that duty, injury sustained by the plaintiff, and a causal connection between the defendant's conduct and the plaintiff's injury."[242] Given the phased nature of these proceedings, the Court is not concerned here with questions of duty or causation as they relate to the Plaintiffs (e.g., a onshore hotel that lost profits allegedly due to the oil spill). Instead, the Court focuses on whether any Defendant breached the applicable standard of care, the nature of that breach, and the causal connection, if any, between that breach and the blowout, explosion, and oil spill.

547. As to causation, the negligence must be the "legal cause" of the damage, which is something more than "but for" causation—"the negligence must be a substantial factor in causing the injuries."[243] If more than one party is the legal cause of the harm, liability is apportioned pursuant to comparative fault.[244] However, "apportionment is not a mechanical

[242] *In re Great Lakes Dredge & Dock Co., LLC*, 624 F.3d 201, 211 (5th Cir. 2010) (citation and quotations omitted).
[243] *Id.* at 213-14 (citation and quotations omitted).
[244] *United States v. Reliable Transfer Co.*, 421 U.S. 397, 411 (1975)

exercise that depends upon counting up the errors committed by [the] parties. The trial court must determine, based upon the number ***and quality*** of faults by each party, the role each fault had in causing the [casualty]."[245]

548. As to BP's conduct, the Court incorporates its discussion above regarding the CWA.[246] For the reasons stated there, the Court finds that BP's conduct was "reckless" under general maritime law and a substantial cause of the blowout, explosion, and oil spill.[247]

549. As to Transocean, the Court has identified several instances where Transocean's conduct fell below the standard of care. This includes the drill crew's misinterpretation of the negative pressure test,[248] the drill crew's failure to detect the pressure anomaly between 9:08 p.m. and 9:14 p.m.,[249] the drill crew's failure to perform a flow check followed by immediately shutting in the well at 9:31 p.m.,[250] the drill crew's failure to divert flow overboard,[251] the master's failure to timely activate EDS,[252] and Transocean's failure to properly maintain the BOP.[253]

550. However, BP had a hand in most of these failures.

551. With respect to the misinterpretation of the negative pressure test, BP was ultimately responsible for its interpretation, not Transocean. It was BP's decision to use the left-over LCM as a spacer that caused the false reading on the kill line—a decision that was driven

---

[245] *Stolt Achievement, Ltd. v. Dredge B.E. Lindholm*, 447 F.3d 360, 370 (5th Cir. 2006) (footnotes omitted) (emphasis added).

[246] *Supra* Part IV.B.ii.-iii.

[247] *Baker*, 554 U.S. at 493-94 (citing Restatement (Second) of Torts § 500, cmt. a (1977) ("'Recklessness may consist of either of two different types of conduct. In one the actor knows, or has reason to know ... of facts which create a high degree of risk of ... harm to another, and deliberately proceeds to act, or to fail to act, in conscious disregard of, or indifference to, that risk. In the other the actor has such knowledge, or reason to know, of the facts, but does not realize or appreciate the high degree of risk involved, although a reasonable man in his position would do so'"); *see also* Restatement (Third) of Torts § 2 (2010); 57A Am. Jur. *Negligence* § 274.

[248] *Supra* Part III.H.ii-iii.

[249] *Supra* Part III.I.iv.

[250] *Supra* Part III.I.vi.

[251] *Supra* Part III.I.viii.

[252] *Supra* Part III.K.i.

[253] *Supra* Part III.J.iii-vi.

by its desire to save costs. BP instructed the Transocean drill crew to switch the negative pressure test from the drill crew's customary method, the drill pipe, to the kill line. The Court agrees with the view expressed by, among others, BP's expert Dr. Bourgoyne, that the negative pressure test would have been properly interpreted had the drill crew been permitted to continue the test on the drill pipe.[254] Most importantly, the drill crew did not have the benefit of Mark Hafle's crucial observation about pressure anomalies, as did Don Vidrine.

552. Turning to the well monitoring and control issues, BP's acceptance of the negative pressure test likely created a misperception on the rig that any well-related issues were securely behind cemented pipe. Thus, the misinterpretation of the negative pressure test (for which BP bears most of the blame) contributed to the subsequent failures respecting well monitoring and control. BP's decision to permit simultaneous operations during displacement also contributed to the well control failures.

553. Furthermore, there is ample evidence that the drill crew was attentive and responsive to the well, such as when they reacted to the pressure spike at 9:17.[255] Indeed, the drill crew noticed and reacted to the pressure anomaly between 9:27 and 9:30; while their response was incorrect, it hardly reflects a conscious disregard for a known risk or an extreme departure from the standard of care. The drill crew also noticed that the BOP's upper annular was not sealing the well and activated the variable bore rams, upon which they likely believed they had succeeded in stopping the blowout.

554. Another point about Transocean's well control failures is that they occurred in a relatively short time frame and in the context of a situation that escalated rapidly. The same can also be said about the master's failure to timely EDS. BP's misconduct, by contrast, was spread

[254] Transcript at 7725:9-11 (Bourgoyne).
[255] *Supra* Part III.I.v.

over a longer time frame. Thus, while Transocean had limited time to react properly, BP could consider its choices.

555. A related point is that BP's failures up to and including the negative pressure test created the catastrophic situation. Transocean's failures, by contrast, largely concern its inability (due in part to further failures by BP) to stop the catastrophe BP set in motion.

556. The Court also considers the proper actions taken by the marine crew following the explosions.[256] BP's conduct, by contrast, lacks similar balance.

557. For these reasons, the Court concludes that Transocean's conduct was negligent and that Transocean's share of liability is considerably less than BP's.

558. As to Halliburton, it had two failures: one concerned cement[257] and the other concerned well monitoring.[258] With respect to the former, Halliburton's conduct is egregious. The Court refers not only to failures before the incident, but also to Halliburton's post-incident conduct involving "off the side" cement tests and destroyed computer simulations. Nevertheless, because the Court ultimately finds that the unstable foamed cement was not a cause of the blowout, no legal fault is allocated to Halliburton for these failures. Halliburton's failure concerning well monitoring was relatively small when compared to others' failures, and it was a failure shared by Transocean's drill crew.

559. Accordingly, to the extent claims against Halliburton were based on a strict products liability theory under maritime law, those claims fail in light of the finding that the cement, however defective, was not a cause of the blowout. This does not affect claims against Halliburton that sound in negligence, however.

---

[256] *Supra* Part III.K.ii.
[257] *Supra* Part III.G.iv.
[258] *Supra* Part III.I.iv.

560. The Court concludes that Halliburton's conduct was negligent and that Halliburton's share of liability is considerably less than both Transocean and BP.

iii. Liability for Punitive Damages: Fifth Circuit Rule

561. Punitive damages may be imposed under general maritime law for reckless, willful, and wanton conduct.[259]

562. Under the facts of this case, the Court finds that the conduct exhibited by BP's employees would make an award of punitive damages appropriate.

563. However, the maritime rule in the Fifth Circuit is that operational recklessness or willful disregard is generally insufficient to visit punitive damages upon the employer. Rather, the conduct must emanate from corporate policy or that a corporate official with policy-making authority participated in, approved of, or subsequently ratified the egregious conduct.[260]

564. The PSC argues that the instant matter should be distinguished from *P&E Boat*, as that case involved essentially a routine transit by a 46' crewboat to a drilling platform, albeit in heavy fog. The crewboat's operation was only a narrow function within the overall scheme of the defendant, Chevron's, business activities. The HORIZON/Macondo well, by contrast, was a significant and substantial operation, requiring the full commitments and attentions of BP and its contractors. Thus, irrespective of the extent to which various participants might or might not be classified as "official policymakers," this was not a situation where a rogue employee decided, on his own, to engage in reckless conduct.

565. The PSC's argument is not without merit. The various BP entities are organized by function. The function of BP Exploration & Production, Inc., as its name suggests, was to explore for and produce oil. Drilling an offshore well like Macondo, then, is at the very heart of

[259] *Baker*, 554 U.S. at 493-94.
[260] *P&E Boat Rentals*, 872 F.2d at 652-53.

BPXP's purpose. And as the PSC points out, a substantial amount of resources was devoted to Macondo: It involved extensive pre-operation planning, significant financial commitments, a massive drilling vessel with sophisticated equipment, and teams of onshore and offshore personnel. Despite the geographic distance between Macondo and BP's Houston office, BP's onshore engineers, geologists, and operational supervisors were tightly connected with the well, BP's offshore personnel, and BP's contractors. Data from the well was transmitted in real time directly to BP's Houston office. BP's onshore personnel communicated frequently with those on the HORIZON, and many decisions, including operational decisions, were made in BP's Houston office.[261] Furthermore, the interpretation of the negative pressure test was a particularly critical moment for the Macondo operation. In light of all this, the Court agrees with the PSC that the facts of this case present a different scenario from *P&E Boat*. The Court similarly agrees that imputing the reckless acts of BP's Well Site Leader and onshore engineer to BP would not appear to conflict with the rationale behind *P&E Boat*—that a corporation should be liable for punitive damages only when the corporation is itself the wrongdoer[262]—given that BP entrusted these employees with such a critical part of a massive operation. Ultimately, some ***person*** within BP had to determine the outcome of the negative pressure test. Who that person is should have little legal significance. The pressurized hydrocarbons presumably do not react differently when a corporate executive, as opposed to a Well Site Leader, misinterprets the negative pressure test. Under the circumstances, BP should be viewed as the "wrongdoer."

566. Nevertheless, *P&E Boat* does not appear to leave room for this interpretation. Moreover, the Court finds that Vidrine and Hafle were not policy-making officials, nor did the

[261] For example, John Guide, the Wells Team Leader in Houston, made the decision to proceed with the cement job following the issues with the float collar, to run the production casing with only 6 centralizers instead of 21, and to forego the CBL. Sometimes he made these decisions after discussing the issue with others. Sometimes, he made these decisions more or less on his own.

[262] *Id.* at 652.

reckless conduct emanate from corporate policy. It also does not appear that BPXP recklessly hired its employees, which *P&E Boat* suggests may be another ground for punitive liability.[263]

567. Accordingly, the Court concludes that BP cannot be held liable for punitive damages under general maritime law.[264] [265]

iv. Liability for Punitive Damages: Other Circuits

568. The State of Alabama urges the Court to make separate findings, as not all Circuits follow the same rule as the Fifth Circuit and some cases may ultimately be resolved under the law of other Circuits.[266]

569. The Court will briefly indulge this request.

570. The Ninth Circuit's maritime rule follows the Restatement, which allows punitive damages against the corporate entity when the actor was in a "managerial capacity" and performing within the scope of his employment.[267] The Court finds that Vidrine and Hafle were in a "managerial capacity" and their actions arose within the scope of their employment.

571. The First Circuit appears to also use the managerial agent theory, but with the added requirement that there be "some level of [corporate] culpability for the misconduct."[268] The Court finds that punitive liability would attach to BPXP under this standard as well.

---

[263] *Id.* at 652 (quoting *U.S. Steel Corp. v. Fuhrman*, 407 F.2d 1142, 1148 (6th Cir. 1969)).

[264] The Court further notes that, even if BP were liable for punitive damages, only commercial fishermen or those who could satisfy the "physical injury" threshold of the *Robins Dry Dock* rule would be entitled to such an award.

[265] While this matter was under advisement, BP brought to the Court's attention the Fifth Circuit's recent decision in *United States v. American Commercial Lines, LLC*, No. 13-30358, 2014 WL 3511882 (5th Cir. July 16, 2014), which BP asserts is relevant to the issue of whether OPA displaces the general maritime law remedy of punitive damages. The PSC indicated it interpreted the case differently. Regardless, given the conclusion that BP is not liable for punitive damages under *P&E Boats*, the Court sees little reason to invite another round of briefing or otherwise address this case or the issue of displacement.

[266] As mentioned earlier, the Supreme Court could not resolve this issue when it was presented in *Baker*, 554 U.S. at 484.

[267] *Protectus Alpha Nav. Co., Ltd. V. N. Pac. Grain Growers, Inc*., 767 F.2d 1379, 1386-87 (9th Cir. 1985).

[268] *CEH, Inc. v. F/V Seafarer*, 70 F.3d 694, 705 (1st Cir. 1995).

v. BP p.l.c. and Transocean Ltd.

572. BP p.l.c. is the parent corporation of the other BP defendants. Transocean Ltd. is the parent corporation of the other Transocean defendants.

573. Having considered the evidence, the Court finds that BP p.l.c. and Transocean Ltd. are not liable under general maritime law.

vi. Triton Asset Leasing GmbH

574. After the Phase One trial concluded, Triton Asset Leasing GmbH ("Triton") moved for judgment on partial findings under Federal Rule of Civil Procedure 52(c).[269] The PSC filed an opposition.[270] The Court has deferred ruling on that motion until now.

575. Triton Asset Leasing GmbH ("Triton") was the owner of the HORZION.

576. On August 17, 2001, nearly nine years before the Macondo blowout, Triton's predecessor chartered the HORIZON to the predecessor of Transocean Holdings LLC.

577. Triton and the PSC agree that the charter party between Triton and Transocean Holdings LLC was a bareboat charter.

578. Triton and the PSC also agree that an owner is not responsible for negligence or unseaworthy conditions that arise after a bareboat or demise charter commences.[271]

579. Triton contends that it is entitled to judgment exonerating it from liability because Plaintiffs have not shown any negligence or unseaworthy condition existing prior to the bareboat charter that caused the blowout, explosion, and oil spill.

580. The PSC contends that the HORIZON was unseaworthy, as a result of Triton's negligence, before the vessel was bareboat chartered to Transocean Holdings LLC. The PSC bases its argument on the configuration of the HORIZON's BOP. It claims that (1) the BOP

[269] Rec. Doc. 10465.
[270] Rec. Doc. 10709. Although this discussion refers only to Triton and the PSC, the Court has considered the arguments of the other Phase One parties to the extent they are relevant to Triton's motion.
[271] *See Picou v. D & L Towing, Inc.*, No. 09-2810, 2010 WL 2696468, at *3 (E.D. La. July 6, 2010).

contained only one set of shearing rams capable of sealing the well, upon which all emergency functions relied, which created a created a single point of failure; (2) the BOP failed to utilize design alternatives that would account for off-center drill pipe, such as the DVS (Double "V" Shear) rams; (3) the BOP's redundant control (MUX) cables were routed through the moon pool, which permitted a single explosion to destroy both cables; (4) the BOP did not utilize an acoustic trigger, which would have provided a backup control to the MUX cables; and (5) the BOP was not capable of containing a well with high flow capacity. Thus, the PSC concludes that the BOP was never fit for its intended purpose, and rendered the vessel unseaworthy from the time it entered service in April 2001.

581. As mentioned in Part III.J.vii, the Court has rejected these arguments. Accordingly, the Court agrees with Triton that the negligence and unseaworthiness that caused or contributed to the events of April 20, 2010, arose after the bareboat charter commenced.

582. For these reasons, Triton is not liable under general maritime law for the blowout, explosion, and oil spill. Triton's Rule 52(c) Motion is GRANTED.[272]

D. Contractual Releases and Indemnities

583. The Court had previously indicated that grossly negligent conduct by Transocean or Halliburton would invalidate the release (but not an indemnity) contained in their respective contracts with BP.[273]

[272] To be clear, this finding applies to claims under general maritime law. A vessel owner who bareboat charters its vessel could still be held liable under a statute like OPA or the CWA, which imposes liability irrespective of fault. However, under the Court's previous decisions in this case, it appears Triton would not be liable under the CWA (because the discharge was not "from" Triton's vessel, nor could Triton be considered an "operator" of the offshore facility). *See* Order and Reasons [As to the Cross-Motions for Partial Summary Judgment Regarding Liability under the CWA and OPA] Rec. Doc. 5809, 844 F. Supp. 2d 746 (E.D. La. Feb. 22, 2012). The only liability Triton appears to face under OPA would be for a surface, as opposed to a subsurface, discharge. *See id.* The parties have agreed to defer the issue of whether any surface discharge occurred, however.

[273] Order & Reasons at 14, Rec. Doc. 5446, 841 F. Supp. 2d 988, 1000 (E.D. La. Jan. 26, 2012).

584. The Court also previously indicated that certain types of breaches or fraud might invalidate contractual indemnities and releases.[274]

585. In light of the conclusions above, the Court finds that Transocean's and Halliburton's contractual indemnities and releases are valid and enforceable against BP.

E. Limitation of Liability

586. For purposes of this discussion regarding the Limitation of Liability Act, "Transocean" means Transocean Holdings LLC, Transocean Deepwater Inc., and Transocean Offshore Deepwater Drilling Inc., but not Transocean Ltd. or Triton Asset Leasing GmbH.

587. The Limitation of Liability Act generally limits a vessel owner's liability to the value of the vessel, post casualty, plus any pending freight.[275] The limit is removed, however, if the negligence or unseaworthiness that caused the damage was within the "privity or knowledge" of the owner.[276]

588. In the typical case, claimants bear the initial burden of proving that their injuries arose as a result of the owner's negligence or the vessel's unseaworthiness. Once this burden is met, the burden shifts to the owner to prove a lack of "privity or knowledge" of a negligent act or unseaworthy condition.[277]

589. "'Privity or knowledge' implies some sort of 'complicity in the fault that caused the accident."[278] "Knowledge, when the shipowner is a corporation, is judged not only by what the corporation's managing officers actually knew, but also by what they should have known with respect to conditions or actions likely to cause the loss."[279]

---

[274] *Id.* at 23-25, 841 F. Supp. 2d at 1006-07; Order & Reasons at 5-6, Rec. Doc. 5493, 2012 WL 273726 (E.D. La. Jan. 31, 2012).
[275] 46 U.S.C. § 30505.
[276] Id.
[277] *In re Signal Int'l*, 579 F.3d 478, 496 (5th Cir. 2009).
[278] *Brister v. A.W.I., Inc.*, 946 F.2d 350, 355 (5th Cir. 1991).
[279] *Trico Marine*, 332 F.3d 779, 789-90 (5th Cir. 2003).

590. The Limitation Act does not apply to all claims, however. Notably, it does not apply to oil spill claims arising under OPA.[280]

591. The Court finds that the drill crew's failure to divert flow overboard constituted a proximate cause of the explosion, fire, and oil spill that was within Transocean's privity and knowledge.[281] To the extent this failure was negligence, Transocean was aware that its crews lacked training about the proper use of diverters, and therefore this negligence was within Transocean's privity and knowledge. The Court also finds that the failure to line up the diverter to discharge overboard prior to the critical operation of displacing the well was also negligence within Transocean's privity and knowledge, given that Transocean (and BP's) policy was to keep the diverter lined up to the MGS. Additionally and in the alternative, failing to line up the diverter to discharge overboard created an unseaworthy condition within Transocean's privity and knowledge. Alternatively, if Transocean wanted to keep the diverter lined up to the MGS as the default even during displacement, then it should have equipped the diverter to automatically divert overboard once the pressure in the MGS reached a certain limit. Transocean's failure to take this alternative measure also constitutes negligence and an unseaworthy condition within its privity and knowledge.

592. Transocean's maintenance failures respecting the BOP constituted negligence and/or created an unseaworthy condition within its privity and knowledge.[282] Although the explosions would have still occurred even if AMF had activated the BSRs, the fire's fuel source would have been removed, making it likely that the rig would have been saved and the oil spill would not have occurred. Also, some injuries that occurred after the initial explosions would likely have been avoided or lessened.

---

[280] *In re Metlife Capital Corp.*, 132 F.3d 818, 821-22 (1st Cir. 1997).
[281] *Supra* Part III.I.viii.
[282] *Supra* Part III.J.

593. Finally, the master's failure to timely activate EDS constituted negligence within the privity and knowledge of Transocean. Like the BOP, the explosions likely would have still occurred even if the master had activated EDS in a timely manner, but the rig probably would have been saved and the oil spill would have been avoided. Also, some injuries that occurred after the initial explosions would likely have been avoided or lessened.

594. For these reasons, the Court finds that "Transocean"—meaning Transocean Holdings LLC, Transocean Deepwater Inc., and Transocean Offshore Deepwater Drilling Inc.—is not entitled to limit its liability under the Limitation of Liability Act. Limitation of liability is not at issue for Transocean Ltd. and Triton Asset Leasing GmbH.

F. Liability Under the Oil Pollution Act of 1990

i. BPXP and OPA's Liability Cap

595. The Court previously held on summary judgment that BPXP is a "responsible party" under OPA with respect to the subsurface discharge of oil.[283]

596. In the same ruling, the Court denied the United States' request for a finding that OPA's limits of liability did not apply based on the alleged violation of two federal regulations.[284]

597. Although the point is perhaps moot with respect to BPXP, the Court believes it partially erred as to the latter ruling and corrects that mistake here.

598. OPA contains various liability caps for oil-spill related damages.[285] These limits do not apply if

[283] Order and Reasons [As to the Cross-Motions for Partial Summary Judgment Regarding Liability under the CWA and OPA] at 14, Rec. Doc. 5809, 844 F. Supp. 2d 746, 755 (E.D. La. Feb. 22, 2012).

[284] *Id.* at 12-14, 844 F. Supp. 2d at 755. BPXP had previously waived the OPA liability cap, which made the ruling unnecessary as to it. However, the Government's motion for summary judgment also targeted Anadarko, a co-lessee, which had not waived the liability cap. BPXP opposed the Government's motion "to ensure that BP is not unfairly tainted with regulatory violations before the Phase 1 trial even begins." *Id.* at 12 n.17, 844 F. Supp. 2d at 754 n.17.

> the incident was proximately caused by . . . the violation of an applicable Federal safety, construction, or operating regulation by the responsible party, an agent or employee of the responsible party, or a person acting pursuant to a contractual relationship with the responsible party . . . .[286]

599. The Government's argument was based in part on 30 C.F.R. § 250.420(a)(2), which in 2010 stated: "You must case and cement all wells. . . . Your casing and cementing programs must: . . . Prevent the direct or indirect release of fluids from any stratum through the wellbore into offshore waters."

600. The Government had argued that it was undisputed that the cement pumped into the Macondo well did not prevent the release of fluids from the formation through the wellbore and into offshore waters, therefore the OPA limits did not apply. The Court responded that the regulation was equivalent to a regulatory prohibition on oil spills, and therefore could not be relied upon to lift the liability cap as it would tend to circumvent the "proximate cause" requirement in OPA.

601. The Court has a far better understanding of the importance of cementing in offshore wells than it did in 2012, when it ruled on the Government's motion. Furthermore, the Court believes that a breach of 30 C.F.R. § 250.420(a)(2) can be a "proximate cause[]" of an "incident"[287] for purposes of removing OPA's liability cap. The Court further finds that the cementing program at Macondo clearly did not prevent the direct or indirect release of fluids from a stratum, through the wellbore, and into offshore waters, and this failure was, in fact, a proximate cause of the incident.

---

[285] *See* 33 U.S.C. § 2704.

[286] *Id.* § 2704(c)(1).

[287] OPA defines "incident" as "any occurrence or series of occurrences having the same origin, involving one or more vessels, facilities, or any combination thereof, resulting in the discharge or substantial threat of discharge of oil." 33 U.S.C. § 2701(14).

602. Accordingly, the Court REVERSES IN PART its prior ruling of February 22, 2012.[288]

ii. Transocean's Liability as an "Operator" of an "Outer Continental Shelf facility"

603. The Court previously ruled that Transocean was not a "responsible party" with respect to the subsurface discharge of oil, and therefore was not liable for removal costs and damages under OPA's general liability provision, 33 U.S.C. § 2702. However, that ruling also noted that Transocean might be liable under another provision in OPA, 33 U.S.C. § 2704(c)(3), which makes an "owner or operator" (as opposed to a "responsible party") of an "Outer Continental Shelf ("OCS") facility" liable to government entities (as opposed to private parties) for all removal costs (as opposed to damages), without limit, when oil discharges from said facility.[289]

604. Section 2704(c)(3) is something of an anomaly in OPA. A party liable under Section 2704(c)(3) must pay all government removal costs, without limit, even though OPA already provides that a "responsible party" of an "offshore facility"—which would seem to include OCS facilities—is liable for all removal costs to all parties, private and governmental.[290] The only way Section 2704(c)(3) avoids total redundancy is that it makes the "owner or operator" liable, whereas the "responsible party" for an offshore facility is the "lessee or permittee of the area in which the facility is located."[291] Notably, most provisions in OPA affix liability to a "responsible party," which then carries different meanings depending on the structure or vessel at issue. Section 2704(c)(3) appears to be the only provision in OPA that does not follow this convention and instead affixes liability directly to the "owner or operator."

---

[288] Rec. Doc. 5809, 844 F. Supp. 2d 746 (E.D. La. Feb. 22, 2012).
[289] *Id.* at 11-12, 844 F. Supp. 2d at 753-54.
[290] 33 U.S.C. § 2704(a)(3).
[291] 33 U.S.C. § 2701(1)(C).

605. The Court believes Section 2704(c)(3) is a result of legislative oversight. As explained in the Conference Report, separate bills from the House and Senate were merged to create the enacted version of OPA. The House used "responsible party" throughout its bill to affix liability, while the Senate used "owner and operator." Like "responsible party," however, the Senate provided different definitions for "owner or operator" depending on the context. The final version of OPA adopted the House practice of using "responsible party." However, the Conferees inserted the portion of the Senate bill pertaining to OCS facilities as subsection (c)(3) of 2704.[292] In so doing, the Conferees failed to conform the Senate language to the House's convention of using "responsible party," nor did they adopt the Senate's definition of "owner or operator," which meant "lessee or permittee of the area" in the case of an OCS facility.[293] Consequently, the result is that OPA, as written, circuitously defines the "owner or operator" of an OCS facility as "any person owning or operating such facility."[294]

606. Nevertheless, the statute is perhaps not so odd as to warrant a judicial re-writing. Indeed, Transocean appears to concede that the Court should construe "operator" under Section 2704(c)(3) as it did under the CWA. Thus, an "operator" "must manage, direct, or conduct operations specifically related to pollution, that is, operations having to do with the leakage or disposal of [oil], or decisions about compliance with environmental regulations."[295] The *Bestfoods* Court added that "to operate" "meant something more than mere mechanical activation of pumps and valves, and must be read to contemplate 'operation' as including the exercise of direction over the facility's activities."[296]

---

[292] *See* H.R. Rep. No. 101-653, at 7 (1990) (Conf. Rep.), *reprinted in* 1990 U.S.C.C.A.N. 779, 785

[293] *See* S. 686 101st Cong. § 102(c)(3) (passed by Senate Aug. 4, 1989).

[294] 33 U.S.C. § 2701(25), (26)(A)(ii).

[295] *Bestfoods*, 524 U.S. at 66-67 (interpreting Comprehensive Environmental Response, Compensation and Liability Act).

[296] *Id.* at 71.

607. Transocean grabs onto the latter quote and contends that, as a contractor, it merely exercised mechanical control over the HORIZON, while BP ultimately controlled and directed all operations at the Macondo well. Transocean also invites the Court to interpret "operator" here in light of that term's meaning under the MMS regulations: "the person the lessee(s) designates as having control or management of operations on the leased area or a portion thereof."[297]

608. The Court is not persuaded. OPA uses "operator" in connection with vessels, onshore facilities, pipelines, and OCS facilities without any indication that the term carries a different or specific meaning when used in the OCS facility context.[298] Furthermore, while the Court agrees that BP ultimately controlled and directed all operations at Macondo, the Court views Transocean as more than one who merely performed "mechanical activation of pumps and valves." Instead, Transocean "conduct[ed] operations specifically related to pollution, that is operations having to do with the leakage or disposal of [oil]." For example, Transocean's drill crew did not need direction or approval from the BP Well Site Leader to activate the BOP and shut in the well. And, as the Court has found, the failure to do so timely actually resulted in oil pollution from the offshore facility.

609. Accordingly, the Court finds that "Transocean" (meaning Transocean Holdings LLC, Transocean Deepwater Inc., and Transocean Offshore Deepwater Drilling Inc., but not Transocean Ltd. or Triton Asset Leasing GmbH.) was an "operator" under 33 U.S.C. § 2704(c). The Court notes, however, that Transocean's liability to government entities for removal costs is ultimately shifted to BP by virtue of the contractual indemnity.

---

[297] 30 C.F.R. § 250.105.
[298] *See, e.g.*, 33 U.S.C. § 2701(32).

V. SUMMARY

610. The Court's conclusions relative to the Phase One trial are summarized below:

611. BP Exploration & Production, Inc. ("BPXP") is subject to enhanced civil penalties under the Clean Water Act ("CWA"), 33 U.S.C. § 1321(b)(7)(D), as the discharge of oil was the result of BPXP's gross negligence and BPXP's willful misconduct.[299]

612. BP (meaning BPXP and BP America Production Company, but not BP p.l.c.), Transocean (meaning Transocean Holdings LLC, Transocean Deepwater Inc., and Transocean Offshore Deepwater Drilling Inc., but not Transocean Ltd. or Triton Asset Leasing GmbH) and Halliburton (meaning Halliburton Energy Service, Inc. and Halliburton's Sperry division) are each liable under general maritime law for the blowout, explosion, and oil spill. BP's conduct was reckless. Transocean's conduct was negligent. Halliburton's conduct was negligent. Fault is apportioned as follows:

BP:	67%
Transocean:	30%
Halliburton:	3%

613. Although BP's conduct warrants the imposition punitive damages under general maritime law, BP cannot be held liable for such damages under Fifth Circuit precedent.[300]

614. BP p.l.c., Transocean Ltd., and Triton Asset Leasing GmbH are not liable under general maritime law. Triton Asset Leasing GmbH's Rule 52(c) Motion for Judgment on Partial Findings[301] is GRANTED.

---

[299] This finding is premised on the Court's previous conclusion that oil discharged "from" BPXP's offshore facility for purposes of the CWA. Should it be determined on appeal that the discharge was instead "from" the vessel, the Court further finds that BPXP was an operator and person in charge of the vessel.

[300] To the extent the standards of the First Circuit or Ninth Circuit would apply to a particular claim, the Court finds that BP would be liable for punitive damages under those rules.

615. Transocean's and Halliburton's indemnity and release clauses in their respective contracts with BP are valid and enforceable against BP.

616. Transocean Holdings LLC, Transocean Deepwater Inc., and Transocean Offshore Deepwater Drilling Inc. are not entitled to limit liability under the Limitation of Liability Act.

617. A violation of 30 C.F.R. § 250.420(a)(2) can remove OPA's liability cap. The Court's prior holding to the contrary is REVERSED.[302]

618. Transocean (meaning Transocean Holdings LLC, Transocean Deepwater Inc., and Transocean Offshore Deepwater Drilling Inc., but not Transocean Ltd. or Triton Asset Leasing GmbH) was an "operator" of an "Outer Continental Shelf facility" under the Oil Pollution Act of 1990, 33 U.S.C. § 2704(c). Consequently, Transocean is liable to the United States for removal costs.

New Orleans, Louisiana, this 4th day of September, 2014.

United States District Judge

[301] Rec. Doc. 10465.

[302] Order and Reasons [As to the Cross-Motions for Partial Summary Judgment Regarding Liability under the CWA and OPA] at 12-14, Rec. Doc. 5809, 844 F. Supp. 2d 746, 755 (E.D. La. Feb. 22, 2012).