U.S. Department
of Transportation

**Federal Aviation
Administration**

Advisory Circular

Subject: MAINTENANCE OF AIRPORT VISUAL AID FACILITIES **Date:** 4/4/2005 **AC No:** 150/5340-26A
Initiated by: AAS-100 **Change:**

1. PURPOSE. This Advisory Circular (AC) provides recommended guidelines for maintenance of airport visual aid facilities.

2. APPLICABILITY. The standards and practices contained in this AC are recommended by the Federal Aviation Administration (FAA) for use by airports in the maintenance of airport owned lighted visual aid facilities.

3. CANCELLATION. AC 150/5340-26 Maintenance of Airport Visual Aid Facilities, dated August 26, 1982, is cancelled.

4. PRINCIPAL CHANGES.

a. Safety procedures and potential hazards from series circuits have been expanded and clarified.
b. Maintenance management has been updated and expanded to cover use of Original Equipment Manufacturer Parts.
c. Electrical test equipment has been updated to provide information on current types of testing equipment.
d. Preventive maintenance has been revised to include procedures for more recently designed light fixtures and requirements/recommendations for photometric testing of runway lighting systems.
e. Added sections on airfield lighted guidance signs, Precision Approach Path Indicator (PAPI) and airport lighting control and monitoring systems (ALCMS).
f. Deleted section on marking of paved areas on airports.
g. Expanded section on troubleshooting of airport lighting series circuits.
h. Added maintenance tolerances in Appendix A for elevated and in-pavement runway guard lights, stop bar lights, CAT III taxiway centerline lighting and PAPI.

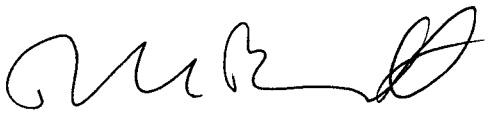

DAVID L. BENNETT
Director of Airport Safety and Standards

AUTHENTICATED
U.S. GOVERNMENT
INFORMATION
GPO

Intentionally Left Blank

TABLE OF CONTENTS

CHAPTER 1. INTRODUCTION.....1
1.0 GENERAL. 1
1.1 SCOPE. 1

CHAPTER 2. SAFETY. 3
2.0 GENERAL. 3
2.1 COMMON CAUSES OF ACCIDENTS. 3
2.2 SAFETY PROCEDURES AND GUIDELINES. 3
2.3 ELECTRICAL HAZARDS OF SERIES LIGHTING CIRCUITS. 3
2.4 SAFETY PRACTICES. 5
2.5 SAFETY BOARDS. 6
2.6 SAFETY CHECKLIST. 7
2.7 SAFETY EQUIPMENT IN VEHICLES. 7
2.8 ELECTRIC SHOCK. 7
2.9 SAFETY TRAINING. 8
2.10 SAFETY WARNING SIGNS/DANGER TAGS. 8
2.11 GROUNDING AND BONDING. 9
2.12 CONFINED SPACES. 9
2.13 LIGHTNING. 9
2.14 TOXIC AGENTS. 10
2.15 FIRE EXTINGUISHERS. 11
2.16 FIRST AID. 13

CHAPTER 3. MAINTENANCE MANAGEMENT. 15
3.0 MAINTENANCE PHILOSOPHY. 15
3.1 MAINTENANCE SCHEDULE. 15
3.2 MAINTENANCE RECORDS. 15
3.3 PREVENTIVE MAINTENANCE PROGRAM. 16
3.4 RECORD RETENTION. 17
3.5 REFERENCE LIBRARY. 17
3.6 SPARE PART PROVISIONING. 17

CHAPTER 4. TEST EQUIPMENT. 21
4.0 INTRODUCTION. 21
4.1 TYPES OF EQUIPMENT AND USAGE. 21

CHAPTER 5. PREVENTIVE MAINTENANCE. 27
5.0 GENERAL. 27
5.1 AIRPORT LIGHTING VAULT. 27
5.2 CONSTANT CURRENT REGULATORS (CCRs). 32
5.3 LIGHT FIXTURE AND BASE MAINTENANCE. 36
5.4 ILLUMINATED RUNWAY AND TAXIWAY GUIDANCE SIGNS. 46
5.5 ROTATING BEACONS. 46
5.6 LIGHTED WIND CONE ASSEMBLIES. 49
5.7 PRECISION APPROACH PATH INDICATOR (PAPI) SYSTEM. 51
5.8 VISUAL APPROACH SLOPE INDICATOR (VASI). 54
5.9 RUNWAY END IDENTIFIER LIGHTS (REILs). 56
5.10 MEDIUM APPROACH LIGHTING SYSTEM (MALS, MALSF, MALSR). 60
5.11 HAZARD BEACONS AND OBSTRUCTION LIGHTS. 62
5.12 AIRPORT LIGHTING CONTROL AND MONITORING SYSTEMS (ALCMS). 64
5.13 STANDBY AND EMERGENCY POWER SYSTEMS. 65

CHAPTER 6. TROUBLESHOOTING PROCEDURES FOR SERIES LIGHTING CIRCUITS. 71
6.0 INITIAL FAULT INVESTIGATION. 71
6.1 LOCATING GROUND FAULTS IN THE FIELD. 72
6.2 LOCATING OPEN CIRCUIT FAULTS. 73
6.3 INTERCONNECTED CIRCUIT FAULTS. 74
6.4 INTENTIONAL GROUND TEST 74
6.5 GROUNDED OUTPUT TEST FOR LOCATING OPEN CIRCUITS. 76
6.6 USING HEAT SENSING EQUIPMENT TO LOCATE GROUND FAULTS. 76
6.7 USING CABLE FAULT LOCATING EQUIPMENT TO LOCATE GROUND FAULTS. 77

APPENDIX A. STANDARDS AND TOLERANCES. 89

CHAPTER 1. INTRODUCTION.

1.0 GENERAL.

This Advisory Circular (AC) provides guidance for the recommended minimum maintenance practices to be used in the maintenance of airport visual aid facilities. Use this circular in conjunction with information available in instruction books, equipment manuals, handbooks and other ACs. Since the function of such facilities is to assist in the safe and efficient movement of aircraft during landing, takeoff and taxiing maneuvers, it is essential that a high degree of operating reliability be maintained. To achieve this, it is necessary to establish and maintain an effective preventive maintenance program. This AC provides suggestions on establishing such a program but, due to the varying complexities of airports and facilities provided, such a program must be tailored to suit each individual airport's particular needs. Since corrective and preventive maintenance procedures for specific equipment are adequately covered in manuals supplied with the equipment, this AC addresses maintenance topics of a more general nature.

1.1 SCOPE.

This AC provides system maintenance information for establishing a preventive maintenance program for airport visual aid facilities. The information provided covers the following systems:

- Airport lighting vault and series lighting circuits
- Constant current regulators
- Runway and taxiway elevated edge lighting systems
- Runway and taxiway in-pavement lighting systems
- Runway guard lights and stop bar lights
- Illuminated runway and taxiway signs
- Rotating beacons
- Lighted wind cone assemblies
- Precision Approach Path Indicator (PAPI) system
- Visual Approach Slope Indicator (VASI)
- Runway End Identifier Lights (REIL) and Omni directional Approach Light System (ODALS)
- Medium Intensity Approach Light System (MALS, MALS/F, MALS/R)
- Hazard beacons and obstruction lights
- Control systems
- Standby engine generator systems

In addition to these equipment topics, this circular also covers recommended safety practices and suggested troubleshooting procedures for airport series lighting circuits.

Intentionally Left Blank

CHAPTER 2. SAFETY.

2.0 GENERAL.

This chapter contains information that will aid airport owners/operators in establishing an effective safety program. Safety is the responsibility of each individual, regardless of position. Safety must be practiced daily in every maintenance activity that is performed. Local operational procedures and OSHA requirements should also be followed. The safety program established at each airport should include preventive safety precautions used when servicing the equipment and first-aid procedures for use in the event of an injury.

2.1 COMMON CAUSES OF ACCIDENTS.

Some common causes of accidents are listed below:

a. Working on equipment without adequate coordination with equipment users.
b. Working on equipment without sufficient experience on that equipment.
c. Failure to follow instructions in equipment manuals.
d. Failure to follow safety precautions.
e. Failure to properly lock out equipment.
f. Using unsafe equipment.
g. Becoming lax due to working in a familiar environment.
h. Poor housekeeping of work areas.
i. Working at unsafe speeds.

The number one cause of accidents is working at unsafe speeds. This is often the main contributing factor in failing to follow proper safety guidelines in all the other causes outlined in the list above. The perception that there is not enough time to take proper safety precautions or think through the proper procedures has the potential for causing an accident. Even in emergency repair situations, care must be taken to make the time to follow proper safety procedures to avoid injury or death.

2.2 SAFETY PROCEDURES AND GUIDELINES.

Most visual aids are exposed to weather and moisture and may develop electrical shock hazards through damage from lightning or insulation deterioration from exposure. Begin maintenance procedures only after a visual inspection has been made for possible hazards. Due to the danger of lightning, lighted navigational aids should not be serviced during periods of local thunderstorm activity. Develop and implement a set of action plans to follow in the event of an accident occurring. Ensure that positive responsive actions take place within moments of accident notification by establishing and having in place a known set of predetermined responses. Precious seconds are saved getting medical assistance to those in need when action plans are in place. Rehearse and review action plans regularly.

2.3 ELECTRICAL HAZARDS OF SERIES LIGHTING CIRCUITS.

Airport lighting circuits, by their nature, are very dangerous. This is especially true for the uninformed electrician with little or no experience working on constant current series circuits. Airport lighting circuits can operate at potentials of several thousand volts depending on the size of the regulator driving the circuit and the load.

2.3.1 There are three basic rules to remember when working on and around airport lighting circuits:

1. **ALWAYS** assume that the circuit is energized until you have proven otherwise. **ALWAYS** check for current before disconnecting the series circuit connector, removing the S1 cutout, or opening the primary series circuit by any other means. Make it a required practice to check the circuit with an ammeter prior to breaking the connection – **NO EXCEPTIONS.** Never attempt to measure voltage in a series lighting circuit using ordinary volt meters. An inductive voltage measuring device (sometimes referred to as a "ticker") such as is described in chapter 4 may be used to detect the presence of induced voltage on a series lighting cable after checking for the presence of current. Always use a true RMS clamp-on type ammeter to verify if the circuit is energized. **ALWAYS** check the operation of the test equipment on a known live circuit before and after measurements are taken.

2. **NEVER** under any circumstances break a live series circuit. The voltage generated in the circuit can reach levels many times normal before the regulator's open circuit protection can shut it down. As long as a current flow can be maintained, even if it is through you, the regulator will continue to operate. This is one of the reasons that series circuits can be so hazardous to work around. By their nature, there is no personnel protection provided such as might be found on parallel interior wiring.

3. **NEVER** enter a manhole with energized conductors and never handle cables or transformers in light base cans while there is current present. Cables or connectors can have cracked insulation where it is not visible or may be deteriorated and fall apart, exposing you to circuit conductors.

2.3.2 Induced Voltages.

Series circuits are typically run from the transformer vault in duct banks where the wires are lying parallel to each other in close proximity. Voltages may be induced in an otherwise un-energized conductor and may be a hazard when troubleshooting and testing. Circuits that have a load that varies due to flashing action of runway guard lights or REIL strobes are particularly prone to induce voltages in other conductors due to the pulsing characteristics of the voltage and current in these circuits. Always check for induced voltages before handling an airfield lighting series circuit conductor.

2.3.3 Re-lamping.

The most common lighting maintenance task on the airfield is re-lamping of runway and taxiway lighting fixtures. Depending on the type of fixture, this may be accomplished in the field or, as in the case of most inset lights, the entire fixture is removed, replaced, and brought to the maintenance shop for refurbishing. The greatest unseen danger to you is re-lamping or removing the fixture with the circuit energized. This has always been a common practice by airport electricians for convenience and the dangers are often overlooked. There are two primary hazards associated with this practice. The first occurs when an isolation transformer has a primary to secondary short in the windings. Remember that even though these are referred to as isolation transformers, they were not designed for personnel protection. They are merely designed to isolate the secondary from the primary circuit to allow the circuit to continue to operate with a lamp burned out. A transformer with a primary to secondary short may not cause a circuit malfunction and could therefore remain unnoticed in normal operation with a live primary. This exposes you to the full voltage present on the primary circuit and can be especially dangerous if another short is present on the primary circuit. When that happens, you can become the path to ground for the full primary current, a circumstance which is almost always fatal. This condition is especially dangerous when working with inset lights and removing them from the light base can while the circuit is energized. As soon as the fixture is unbolted and lifted from the can, you become the path to ground. Some have tried to alleviate this hazard by attaching a ground wire from the bottom of the light fixture to a grounding lug on the inside of the can. However, you cannot know if the wire is truly connected until you remove the fixture, at which time it is too late.

The second hazard encountered when re-lamping an energized light fixture is from the open circuit voltage present at the secondary of the transformer. The open circuit voltage present on the secondary of the transformer is proportional to the size of the transformer. The open-circuit secondary voltage on a 300 watt transformer is approximately 110 volts. Moreover, depending on the materials used in the design of the isolation transformer and

the type of regulator powering the circuit, relatively high voltage peaks can be generated. Once again, the larger the transformer, the higher the peaks with as much as 200 volts being generated in some circumstances. The duration of this peak varies inversely with the size of the transformer (i.e. larger transformers have shorter durative spikes). Because of their size and duration, the peak voltages can create an unsafe condition for maintenance personnel. Therefore, we recommend that you perform re-lamping of the series lighting circuits with the circuits de-energized, especially during the re-lamping of fixtures with exposed contacts. If this is not practical, wear appropriate insulating gloves with leather gauntlets during re-lamping procedures.

A final hazard that is present when re-lamping any type of fixture, whether in the field or at the maintenance shop, is the danger of cuts from broken lamps. Many times when an airfield lamp fails, the glass envelope becomes cracked or brittle and can break during the removal process. Always wear leather gloves when removing lamps to prevent your hands from being cut in the event of a lamp shattering.

2.4 SAFETY PRACTICES.

When you perform maintenance on airport visual aids, use the following safety practices:

a. Ensure that workers are trained and familiar with electrical safety.
b. Strictly observe safety rules.
c. Ensure that commercial test equipment is Underwriters Laboratory (UL) approved and rated for the voltage under test or for the application.
d. Prior to beginning any maintenance work on airport lighting circuits, coordinate the work schedule with the tower, facility manager, or airport operations personnel. Make sure circuits will not be energized during maintenance by observing strict lock-out tag-out procedures for the equipment and obtain authorization for local control if equipment is normally operated from a remote control point.
e. Where maintenance work is to be accomplished on a high-voltage circuit, assign at least two electricians, with at least one having a thorough knowledge of the layout of all airport high-voltage circuits.
f. Because performing maintenance on many lighted visual aids requires workers to traverse the active airfield, all workers shall be fully knowledgeable of air traffic control and radio communication procedures. Workers shall be fully familiar with airport runway and taxiway layout to avoid any possibility of runway incursions. All air traffic control instructions shall be read back to the controller and if the worker has any question regarding the instructions of the controller, the worker shall ask the controller to repeat the message. All vehicles operated within the aircraft operations area shall be properly marked and lighted per FAA AC 150/5210-5, Painting, Marking and Lighting of Vehicles Used on an Airport.

If you are the observer electrician, your duties include:

a. Keeping other personnel not involved in the work clear of the equipment.
b. Being familiar with power disconnects and immediately disconnecting the power source in case of emergency.
c. Being qualified in first-aid and prepared to render emergency care if necessary. You should bear in mind that prevention of an electrical accident is of primary importance even though first-aid treatment is available.
d. Observing the work being done to detect and warn against unsafe practices.

2.4.1 Personal Safety Precautions.

Every electrician should adopt the following common sense safety precautions as standard procedure:

a. Know the location of main power disconnect devices.
b. Know how to summon medical aid.
c. De-energize circuits by removing necessary fuses using properly insulated fuse pullers or by turning off and locking out circuit breakers or other disconnecting means. Consult circuit diagrams to identify all

fuses, breakers or disconnects involved. Remember that removal of a fuse does not remove the voltage from the "hot" fuse clip. Discharge all capacitors.

d. Do not depend on interlocks to remove power or on indicating lights to signal that power is off. Verify that power is off by using a voltmeter and/or ammeter on the component after opening the power switch. Verify operation of voltmeter (or ammeter) on known live circuit before and after measurements are taken.
e. Insulate your feet by standing on a dry rubber mat. Remember, however, that contact with the grounded equipment cabinet could nullify this protection.
f. Stay clear of terminals, leads, or components that carry voltages of any magnitude. Also, avoid contact with components that are grounded, including the frame.
g. Shut down and de-energize the equipment when it is necessary to reach into the equipment in locations where rapid and direct withdrawal of the hand is not possible. In any case, only one hand should be exposed, with the other hand kept away from contact with voltages or ground.
h. Be certain that there is no power applied to a circuit when making a continuity or resistance check (the meter will be damaged and you could be injured).
i. Ground test equipment to the equipment under test unless otherwise specified in instruction manuals.
j. Place a warning sign, such as "DANGER - DO NOT USE OR OPERATE," at the main switch or circuit breaker, and provide a lockout for the circuit on which you will be working. Follow direction of local facility lock-out tag-out procedures manual.
k. Do not wear jewelry, wristwatches, or rings while working with electrical equipment.
l. Keep clothing, hands, and feet dry if at all possible.
m. Use the correct tool (screwdriver, alignment tool, etc.) for doing the job.
n. Never use toxic or flammable solvents for cleaning purposes.
o. Where air pressure is required for cleaning, use a low-pressure (30 psi or less) air source. Eye protection (goggles or face mask) is necessary when using compressed air for cleaning.
p. Wear goggles and safety shoes when around high voltage.
q. Do not take anything for granted when working with inexperienced help.

2.5 SAFETY BOARDS.

Locate a plywood board for posting safety procedures and a pegboard for mounting safety equipment in the airport lighting vault, switchgear rooms, engine generator rooms, and other appropriate locations. In addition, provide a telephone for emergency use as well as regular communications use. Recommended safety procedures and safety items to be included on or adjacent to safety boards are as follows:

a. Accident and fire procedures.
b. Emergency telephone numbers, such as doctor, hospital, rescue squad, fire department, airport operations, police and Air Traffic Control Tower (ATCT).
c. Resuscitation instructions.
d. Resuscitation equipment (Resuscitube or equivalent).
e. First-aid kit.
f. High-voltage disconnect (hot) stick.
g. Non-conductive body rescue hook.
h. Rubber gloves rated for maximum voltage present with leather gloves and protective storage bag.
i. Insulated fuse puller.
j. Non-metallic flashlight
k. Grounding stick.
l. Safety posters and bulletins.
m. Portable non-conductive warning signs with non-conductive hangers.
n. Fire extinguisher of proper type rating for electrical fires.
o. Emergency eyewash station if not provided elsewhere in building.
p. Automatic External Defibrillator

2.5.1 Safety Board Inspection.

Inspect the equipment located on the safety board as indicated below:

a. Test rubber gloves in accordance with ASTM D120, Specification for Insulated Rubber Gloves. ASTM specifications may be obtained from the American Society for Testing and Materials, 1916 Race Street, Philadelphia, PA 19103.
b. Testing may be performed by private testing labs, utility companies, and large military and Federal establishments.
c. Gloves should be proof-tested at the following intervals:
   - In daily use – 30 days.
   - Infrequently used – 180 days.
d. Visually inspect hot sticks for paint smears, carbon paths, dirt smears, etc., and clean them, if required, prior to use. Re-surface and test hot sticks that cannot be cleaned and/or have significant surface-coating ruptures.

NOTE: *Wear certified rubber gloves (ASTM D120) and protective leather gauntlets whenever hot sticks are used.*

2.6 SAFETY CHECKLIST.

Complete a safety inspection on a monthly basis to ensure that the safety boards contain all required items and that test equipment is in a safe operating condition. Retain the completed checklist on file for at least one year.

2.7 SAFETY EQUIPMENT IN VEHICLES.

All vehicles operated on the airfield should have a properly sized fire extinguisher and first aid kit. Equip all vehicles and/or personnel with radio communication to be available to summon help in an emergency. Mark and register all vehicles appropriately. Equip all vehicles with a lighted warning beacon and a copy of current Airport (ATC) Procedures and Ground Vehicle Guide to Airport, Signs and Markings.

2.8 ELECTRIC SHOCK.

An electric shock is the passing of an electric current through a person. The amount of damage depends on the amount of voltage and current to which the person is subjected.

a. Voltages between 200 and 1000 volts at commercial powerline frequencies are particularly harmful since, under these conditions, heart muscle spasm and paralysis of the respiratory center occur in combination. However, lower voltages can also prove fatal, as evidenced by records of deaths caused by 32 volt farm lighting systems. The body response to current is a follows:

   - 5 to 15 mA stimulates the muscles
   - 15 to 19mA can paralyze the muscles and nerves through which it flows
   - 25 mA and above may produce permanent damage to nerve tissues and blood vessels
   - 70 mA and above may be fatal.

b. The injurious effects suffered during electric shock depend upon the path of the current through the body. The current path will take the most direct route through the body from the two points of contact. For this reason, any current path which involves the heart or the brain is particularly dangerous. Therefore, keeping one hand clear of the equipment will eliminate the possibility of a current path from arm to arm.

2.9 SAFETY TRAINING.

Establish a safety training course and present to all employees. Present follow-up training on a periodic basis to ensure that employees are safety motivated. Include first aid and CPR (Cardio-Pulmonary Resuscitation) training in the safety training course. The safety course shall include driver safety training and proper procedures on contacting local emergency, police, and fire agencies.

2.10 SAFETY WARNING SIGNS/DANGER TAGS.

The following discusses the use of warning signs on high voltage equipment.

2.10.1 "Danger – High Voltage" Sign.

Permanently place "DANGER – HIGH VOLTAGE" signs on all fixed electrical equipment where potentials of 500 volts or more terminal-to-ground are exposed. Place signs in a conspicuous location, usually on the outside of the equipment.



Figure 2-1 "Danger – High Voltage" Sign

2.10.2 Lock-Out/Tag-Out and Danger Tags.

Each airport electrical maintenance department should have a written lock-out/tag-out procedure. Equipment or circuits should never be worked on unless locked out and tagged by the person performing the work. Never trust anyone but yourself. Have your partner check behind you to make sure the proper equipment is turned off. The lock-out tag should only be removed by the person who signed it except in some circumstances when verbal permission has been granted to another person or when the worker who signed the tag is on vacation, etc. Never rely on the tower controllers to assure electrical safety. The controllers in the tower are relieved periodically and the next person may not know of the work that is going on. Always take whatever time is necessary to make sure that the circuit or equipment you are working on is safe. One of the primary reasons for accidents is when workers get in too great a hurry and don't take proper precautions and follow proper safety procedures. The other main reason is when the electrician lets his/her guard down because they are working in a familiar environment and becomes negligent about safety procedures.



Figure 2-2 Danger Tag

2.10.3 Locks and Padlocks.

Use built-in locks on switchgear and disconnecting switches whenever the equipment is tagged, and return the keys to the supervisor responsible for their control. Padlocks need not be used if it is decided that use and control of such locks would be difficult because of the type of switchgear and its location. However, use padlocks with "DANGER" tags when equipment or electrical lines remain out of service or when electrical work has been discontinued until a later date. When outside contractors are involved, each contractor should attach and control tags and locks independently.

2.11 GROUNDING AND BONDING.

Never remove, alter, or attempt to repair conductors or conduit systems providing grounding or electrical bonding for any electrical equipment until all power is removed from equipment. Warn all personnel of the ungrounded/unbonded condition of the equipment. Display appropriate warning signs, such as danger tags, to warn personnel of the possible hazards.

2.12 CONFINED SPACES.

Be sure to have a plan in place for dealing with confined spaces that conforms to OSHA standards. Make sure to test the air quality and use an approved blower to ventilate any confined spaces before entering. This includes any unventilated space especially manholes and storage tanks. Remember that gases produced by rotting materials, both vegetable and animal, will displace oxygen. These materials can be commonly found in airport lighting manholes. When working in manholes and storage tanks with vertical access, personnel must wear proper Class II or Class III harnesses and be connected to a rescue tripod-mounted winch mounted above the entrance. Use forced air blowers with flexible ducts to provide fresh air to confined spaces. Keep vehicles away from air intakes for blowers. Vehicle exhaust can quickly contaminate the quality of the forced air.

2.13 LIGHTNING.

When personnel are subjected to direct lightning strikes, the results are nearly always fatal. Although extraordinary escapes from direct strikes have been reported, the shock is so great that survival is rare. The major portion of lightning casualties arises from secondary effects, such as side flashes and induced charges.

NOTE: ***IF ADMINISTERED IN TIME, FIRST-AID TREATMENT, ESPECIALLY ARTIFICIAL RESPIRATION OR CARDIO-PULMONARY RESUSCITATION MAY PREVENT DEATH FROM ANY DIRECT CHARGES.***

Observe the following rules for personal safety, if possible, during any thunderstorm:

a. Remain indoors unless absolutely unavoidable. Remember, when on the airfield YOU are the tallest object and therefore vulnerable to lightning strikes. Stay within a dry area of a building, preferably away from all metal objects.

b. If there is a choice of shelter, select the type of shelter in the following order:
   - Large metal or metal-frame building
   - Dwellings or other buildings which are protected against lightning
   - Vehicles
   - Large unprotected buildings.

c. If remaining out-of-doors is unavoidable, keep away from the following:
   - Small sheds and shelters in an exposed location; in particular, any that house power equipment.
   - Wire fences, antennas, supporting structures, or lines; whether telephone, electric, or otherwise.
   - Hilltops and wide-open spaces.
   - Isolated trees.

2.14 TOXIC AGENTS.

Toxic agents are poisonous substances that can cause injury by contact or injection. Substances termed “caustic” or “corrosive” cause the flesh to be eaten away on contact; the results of contact with these agents range from minor skin irritations to severe burns. There are materials that are toxic only if they are taken internally. Toxic agents also exist as a gaseous vapor and may be injurious immediately or over a long period of time. There are also a few substances used in electric equipment that are basically non-toxic agents, but under certain conditions can become highly toxic.

2.14.1 Carbon Tetrachloride.

Never use carbon tetrachloride. Contact with liquid carbon tetrachloride destroys the natural oils of the skin, producing a whitish appearance on skin surfaces that are exposed. Continuous skin exposure may cause skin eruptions. Carbon tetrachloride fumes are highly toxic.

2.14.2 Trichloroethylene.

This agent, used principally as a degreasing solvent, is a narcotic and anesthetic material. Organic injury rarely results from overexposure, but repeated overexposure can cause anemia and liver damage.

2.14.3 Battery Acids.

The most common battery acid is sulphuric acid. Sulphuric acid is a corrosive toxic agent; repeated or prolonged inhalation of its fumes can cause inflammation of the upper respiratory tract, leading to chronic bronchitis. Loss of consciousness with severe damage to the lungs may result from inhalation of concentrated vapors when the sulphuric acid is hot. The acid, in a highly concentrated form prior to adding water for battery use, acts as a powerful caustic, destroying skin and other tissue. This destruction appears as severe burns, and such exposure may be accompanied by shock and collapse. The fumes from highly concentrated sulphuric acid cause coughing and irritation of the eyes; prolonged exposure may produce chemical pneumonitis.

Batteries and battery acid also produce hydrogen gas, a by-product of the charging process. Hydrogen gas is highly flammable and can react explosively in conjunction with a spark or flame.

All locations where lead-acid batteries are used or housed should have, as a minimum, an emergency eyewash station installed. If water is not readily available, portable emergency eyewash stations consisting of a wall mountable water bottle should be made readily available.

2.15 FIRE EXTINGUISHERS.

Conveniently locate fire extinguishers of the proper type (see Paragraph 2.15.4), and in good working condition, near all high-voltage equipment.

2.15.1 A Brief Introduction to Fire Extinguishers and Fire Types.

When used properly, portable fire extinguishers can save lives and property by putting out a small fire or containing it until the fire department arrives.

Portable fire extinguishers, however, are not designed to fight large or spreading fires. Even for small fires, they are useful only under certain conditions:

- The operator must know how to use the extinguisher. There is no time to read directions during an emergency.
- The extinguisher must be within easy reach and in working order, fully charged.
- The operator must have a clear escape route that will not be blocked by fire.
- The extinguisher must match the type of fire being fought. Extinguishers that contain water are unsuitable for use on grease and electrical fires.
- The extinguisher must be large enough to put out the fire. Many portable extinguishers discharge completely in as few as 8 to 10 seconds.

2.15.2 How to Use Portable Fire Extinguishers.

Remember the PASS system:

P…Pull the Pin
A…Aim the extinguisher nozzle at the base of the flames
S…Squeeze trigger while holding the extinguisher upright
S…Sweep the extinguisher from side to side

ALWAYS make sure the fire department is called and inspects the fire site, even if you think you have extinguished the fire!

2.15.3 Should You Try to Fight the Fire?

Before you begin to fight a fire:

- Make sure everyone has left or is leaving the building
- Make sure the fire department has been called
- Make sure the fire is confined to a small area and is not spreading
- Make sure you have an unobstructed escape route to which the fire will not spread
- Make sure you have read the instructions and know how to use the extinguisher.

It is reckless to fight a fire in any other circumstances. Instead, leave immediately and close off the area.

2.15.4 Class of Fire Extinguishers.

Fire extinguishers are divided into four categories, based on different types of fires. Each fire extinguisher also has a numerical rating that serves as a guide for the amount of fire the extinguisher can handle. The higher the number, the more fire-fighting power. The following is a quick guide to help choose the right type of extinguisher:

- **Class A** extinguishers are for ordinary combustible materials such as paper, wood, cardboard, and most plastics. The numerical rating on these types of extinguishers indicates the amount of water it holds and the amount of fire it can extinguish.
- **Class B** fires involve flammable or combustible liquids such as gasoline, kerosene, grease and oil. The numerical rating for Class B extinguishers indicates the approximate number of square feet of fire it can extinguish.
- **Class C** fires involve electrical equipment, such as appliances, wiring, circuit breakers and outlets. Never use water to extinguish Class C fires – the risk of electrical shock is far too great! Class C extinguishers do not have a numerical rating. The C classification means the extinguishing agent is non-conductive.
- **Class D** fire extinguishers are commonly found in a chemical laboratory. They are for fires that involve combustible metals, such as magnesium, titanium, potassium and sodium. These types of extinguishers also have no numerical rating, nor are they given a multi-purpose rating – they are designed to Class D fires only.

Some fires may involve a combination of these classifications.

2.15.5 Most Common Types of Fire Extinguishers.

- **Water extinguishers** or air-pressurized water (APW) extinguishers are suitable for **Class A fires only. Never use a water extinguisher on grease fires, electrical fires or Class D fires – the flames will spread and make the fire bigger!** Water extinguishers are filled with water and pressurized with oxygen. Again – water extinguishers can be very dangerous in the wrong type of situation. Fight the fire only if you are certain it contains ordinary combustible materials.
- **Dry chemical extinguishers** come in a variety of types and are suitable for a combination of **Class A, B and C fires.** These are filled with foam or powder and pressurized with nitrogen.

    a. **BC** - This is the regular type of dry chemical extinguisher. It is filled with sodium bicarbonate or potassium bicarbonate. The BC variety leaves a mildly corrosive residue which must be cleaned immediately to prevent any damage to materials.

    b. **ABC** – This is the multipurpose dry chemical extinguisher. The ABC type is filled with monoammonium phosphate, a yellow powder that leaves a sticky residue that may be damaging to electrical appliances such as a computer.

Dry chemical extinguishers have an advantage over CO^2 extinguishers since they leave a non-flammable substance on the extinguished material, reducing the likelihood of re-ignition.

- **Carbon Dioxide (CO^2) extinguishers** are used for **Class B and C fires.** CO^2 extinguishers contain carbon dioxide, a non-flammable gas, and are highly pressurized. The pressure is so great that it is not uncommon for bits of dry ice to shoot out the nozzle. They don't work very well on Class A fires because they may not be able to displace enough oxygen to put the fire out, causing it to re-ignite.

CO^2 extinguishers have an advantage over dry chemical extinguishers since they don't leave a harmful residue – a good choice for an electrical fire on a computer or other electronic device.

It is vital to know what type of extinguisher you are using. Using the wrong type of extinguisher for the wrong type of fire can be life-threatening.

2.16 FIRST AID.

First aid is what to do before the doctor comes. It is never a substitute for the medical help. The maintenance technician should take the lifesaving measures necessary in emergencies, but avoid doing harm. Many first-aid measures are quite simple and do not require “split-second speed” in their application. Haste without knowing what one is doing can be worse than doing nothing at all. At other times, immediate action is essential to save a life or prevent serious complications; this action can only be taken by someone who is on the scene when minutes are vital. Learn about first aid before emergencies happen. Be prepared to give help safely and beneficially when necessary. Contact the American Red Cross to provide refresher first-aid courses to maintenance personnel to keep them proficient.

Intentionally Left Blank

CHAPTER 3. MAINTENANCE MANAGEMENT.

3.0 MAINTENANCE PHILOSOPHY.

The purpose of the maintenance management system is to ensure the maximum availability of any given system at a minimum cost in man-hours or funds. "Availability" and "costs" are relative terms; they must be interpreted for each airport. For example, a CAT I runway may still be considered operational with 15% of the edge lights out, while a PAPI system may be unserviceable with more than one lamp out per box. By the same reasoning, the cost of maintaining a spare regulator may be considered cost prohibitive, while stocking replacements for 10% of the runway edge lights may be considered a normal practice. In addition, operational factors are a major consideration in determining what maintenance is required. Airports with heavy traffic may require more frequent maintenance servicing than those used only by light traffic. The maintenance operations include maintenance planning, preventive maintenance inspection, visual inspection, repair, installation, calibration, and unscheduled maintenance procedures. Maintenance procedures, including the work order and documentation required, may vary between airports. The purpose of this document is to provide the minimum maintenance procedures required for safe and efficient movement of aircraft during takeoff, landing, and taxiing operations.

Regardless of the actual maintenance routines decided upon, the following elements are essential to any controlled maintenance program. The maintenance procedures in this AC are considered minimum guidelines:

a. Document the service checks that comprise the maintenance program.
b. Record the performance of each maintenance action, scheduled or unscheduled.
c. Document repairs and troubleshooting performed on each piece of equipment and the results of those actions as well as the symptoms related to the malfunction. This allows for more rapid troubleshooting of similar problems at a later date.

3.1 MAINTENANCE SCHEDULE.

Documenting the maintenance schedule by spelling out each item of routine maintenance is beneficial in several ways:

a. It allows planned allocation of man-hours to the maintenance function.
b. It helps to establish spare part stock levels.
c. It identifies the necessary maintenance routines to new employees, decreasing training time needed for system familiarization.
d. It identifies the scope of the maintenance task in terms of man-hours and material requirements.

3.2 MAINTENANCE RECORDS.

Maintenance records are an important part of an effective maintenance management system; they provide a service history of each piece of equipment, ensure regular maintenance without duplication of effort, and provide a data base for statistical analysis of lighting system performance. Without records, knowledge gained from regular inspections will not be retained, and preventive maintenance will be difficult. An effective records system should allow for the recording and retrieval of information with a minimum of effort. The records system should compile data that will document the effectiveness of the maintenance program. By checking the records, a manager should be able to determine whether a particular maintenance task is being done too frequently or not often enough. By such a trial-and-error process, a maintenance program uniquely tailored to the facility can be developed.

3.3 PREVENTIVE MAINTENANCE PROGRAM.

Reliable functioning of airport lighted visual aids is essential to airport safety, capacity, and operation especially for low visibility operations. Therefore, it is essential that a preventive maintenance program be established to ensure reliable service and proper equipment operation. Properly scheduled inspections, testing, and calibrations are essential to the proper functioning of these systems. Airport lighting systems are designed to be dependable and may continue to operate for long periods of time even if maintenance is neglected. Eventually a failure will occur and, if the failure occurs at a critical time, safety may be jeopardized. Lighted visual aid maintenance should receive high priority to prevent equipment failure, false signals, and deterioration of the system.

3.3.1 Installation and Material.

The first element in a preventive maintenance program is high quality, properly installed equipment. Preventive maintenance is difficult on equipment that has been installed haphazardly without consideration of maintenance requirements. When such conditions exist, they should be brought to the attention of the proper authority and corrected rather than trying to establish a preventive maintenance program to compensate for the condition.

Consult the electrical maintenance supervisor at an airport prior to and during the design of any installation of new or additional visual aid systems. By so doing, the airport can avoid costly problems during and after construction. Consideration should also be given to the method of selection and training of any contractor personnel involved in the installation of airfield lighting products. The need for specialized training for airport maintenance electricians applies to the contractor personnel also.

3.3.2 Personnel.

The second element in a preventive maintenance program is trained experienced personnel. Maintenance personnel should have a thorough knowledge of the equipment, should have experience with high voltage, and should be able to make careful inspections and necessary repairs. Special training is available and may be desirable, as most well-qualified electricians can be trained on-the-job if suitable supervision and instruction are provided. Considerable experience with the equipment and its operation is desirable. These individuals should be present, or on-call, during the operating hours of the airport to correct any deficiencies that may develop. In short, airport visual aid maintenance personnel should be specialists in the field.

3.3.3 Tools and Test Equipment.

The third element in a preventive maintenance program is the tools and test equipment required to perform the maintenance. This includes specialized tools and test equipment, adequate working space, adequate storage space, spare parts, and applicable technical manuals.

3.3.4 Preventive Maintenance Inspection Program.

The fourth element in a preventive maintenance program is an effective preventive maintenance inspection schedule for each visual aid. This schedule should also include all cable systems. The preventive maintenance inspection (PMI) schedule is the foundation for the successful maintenance of the equipment. If the PMI is performed properly and at the scheduled time, it will ensure top system performance and will minimize unscheduled interruptions and breakdowns. Review of the inspection records, checks, tests, and repairs provides a constant awareness of the equipment condition and gives maintenance personnel advanced warning of impending trouble.

3.3.5 Preventive Maintenance Inspection Schedule.

Scheduled inspections and tests are those accomplished on specific types of equipment on a periodic basis. The schedule may be based either on calendar or on hourly-use increments. The PMI schedules, based upon recommendations from the manufacturers and users of the equipment, are considered to be the typical requirements to keep the equipment in good condition. Adjust the frequency of a particular PMI after experience is gained under local operating conditions.

3.4 RECORD RETENTION.

There is no set period of time that maintenance records should be kept, but in keeping within the goals mentioned above, a period of twice the longest period recorded would appear to be the minimum (i.e., 2 years in the case of annual maintenance action). Records of daily inspection will, of course, lose their significance much sooner, probably within a month. It should be noted however, that maintenance records should be retained permanently, if possible, as situations may develop years later in which those records can prove invaluable.

3.5 REFERENCE LIBRARY.

Establish a reference library to maintain a master copy of all Equipment Technical Manuals (ETMs), ACs, as-built drawings, and other useful technical data. The electrical supervisor should establish and maintain responsibility for maintaining the technical reference library and ensure that technical manuals and drawings are kept up to date and not lost or damaged.

3.5.1 Equipment Technical Manuals (ETMs).

ETMs and other manufacturer's literature form an important part of the reference library. Obtain two copies of all technical manuals and related manufacturer's literature. Retain a master copy in the reference library, and provide a separate copy for the shop. In addition, keep a copy of each equipment manual at the equipment location. This facilitates troubleshooting and repairs without the necessity of traveling back to the shop location to retrieve the manual. Do not remove the master copy of the technical manual from the reference library as it can easily become misplaced or lost. In the event the shop copy is lost, make another photocopy of the technical manual from the reference library instead of releasing the master copy.

3.5.2 Advisory Circulars.

Important reference information on installation, design tolerances, and operation of visual aid equipment may be found in FAA ACs. Include a copy of the ACs covering the equipment at the facility, along with a copy of this AC, in the reference library.

3.5.3 Other Technical Data.

Other reference information that is occasionally useful should also be added to the library. This might include local electrical codes, engineer's handbooks, test equipment manuals, and other general information publications.

3.5.4 As-Built Drawings.

Maintain the master copy of all as-built (record) drawings as part of the reference library. Incorporate modifications to any equipment into the drawings as soon as the modification is completed. Give a copy of the "as-built" lighting plan, showing the location of all cable runs, runway lights, etc., and including the wiring diagrams for the lighting, engine generator, and the visual aid system, to the field technicians as a working copy. Install or identify test points at appropriate locations in the field circuitry and record locations of these test points on the "as-built" drawings. Immediately update any notations regarding test points or discrepancies in the drawings made in the field on the master set in the reference library.

3.6 SPARE PART PROVISIONING.

This paragraph contains guidelines on how to establish a stock of spare parts to be used for quick repair of lighting equipment that fails unexpectedly. The purpose of a spare parts system is to have the necessary part on hand when

a piece of equipment fails; this will minimize the time the system is out of operation. However, the greater the number of spare parts stored, the greater the inventory costs. The optimum spare part system balances the cost of system downtime (lost operation, tenant inconvenience, safety, etc.) with the cost of purchasing and storing spare parts. A small airport with few operations may suffer little inconvenience with the loss of their lighting system and may, therefore, choose to stock few spare parts. A large airport may rely heavily on its lighting system for low visibility operations and would, therefore, require a substantial quantity of spare parts. In the case of a large airport, the funds lost by the tenants due to interrupted operations and the impact on the safety and security of the traveling public must also be taken into consideration. A malfunction at a major airport can have a far reaching effect on the national airspace system. When establishing a spare parts inventory, two questions must be answered:

(1) What parts should be stocked?

(2) How many of each part?

When new construction occurs or a project is funded for replacement of existing systems, fund and include a quantity of spare parts (fixtures, lamps, fuses, relays and spare CCR control boards, etc.) in the equipment furnished by the contractor. This gives the maintenance department a built-in stock of spare parts and lessens the time required to procure parts for the new equipment. This is especially true if the equipment being installed is different from what is currently in use.

3.6.1 Choosing Spare Parts.

To answer the two questions posed above, several factors must be considered, including failure rate, part availability, and effect of the part failure.

3.6.2 Failure Rate.

The failure rate (or replacement rate) is the product of the expected life of an item and the number of items in the system. For instance, if a lamp is expected to last six months, and we have 100 lamps in the system, then an average of 100 lamps will be replaced every six months or approximately four per week. Accurate records of parts used over time will help immensely in determining a failure rate.

3.6.3 Part Availability.

Part availability refers to the time it takes to secure a replacement part. This usually means procurement lead time. If a part can be readily procured from shelf stock of a local supplier, it might not be necessary to add the part to the spare parts inventory; as it could be purchased when needed or the number of spare parts in the inventory could be reduced. However, if there is a six-week lead time required by the supplier, then stock six times the weekly failure rate (24 lamps in the example above). Spare parts for constant current regulators and other special equipment fall into this category. For instance, a replacement printed circuit board or other assembly typically has a six to twelve week lead time and unless a spare regulator is maintained for emergency use, the loss of a circuit could have a serious effect on airport operations. There are methods of obtaining parts which may reduce the effect of a long lead time. These include substitution (the use of a functionally equivalent part from another manufacturer), cannibalization (replacing one of a pair of adjacent failed lamps by “borrowing” a lamp from elsewhere in the system), and temporary fixes (such as the use of portable lights in place of the fixed light installation) while awaiting corrective maintenance. It should be noted, however, that these solutions should be considered only as an emergency measure and that proper spare parts provisioning will eliminate the need for such techniques.

3.6.4 Effect of the Failure.

The effect of the failure of a particular spare part depends on how important the part is to the equipment it is installed in, and how vital the equipment is to airport operations. The failure of a lamp in an edge light would not lead to any system downtime, but the failure of a circuit board in a constant current regulator would cause the loss of the entire lighting circuit that it powers. The equipment manufacturer will give guidance on recommended spare

parts. As experience is gained with the system, other parts may be added or deleted from the inventory. The impact of a part's failure should be considered when building a spare parts inventory.

3.6.5 Part Identification.

An important part of maintaining a spare parts inventory is accurately cataloging the parts on hand by manufacturer's part number. This is important to ensure that the correct part is used in a broken piece of equipment; many optical parts are visually similar but vary significantly in performance. The use of the manufacturer's part number is also vital when reordering; if a part is ordered by its generic name, the manufacturer may send a later version of the part which is incompatible with the existing system. It is extremely important to maintain manufacturer's data which reflects your equipment, describing the type, model number, and serial number details.

3.6.6 Use of Original Equipment Manufacturer (OEM) Part.

The use of non-OEM parts or lamps in FAA approved equipment is strongly discouraged. The FAA has strict specifications for approval of all airport lighting equipment and use of non-OEM parts or lamps in such equipment or systems can render the equipment to be functionally non-FAA approved. This could possibly lead to serious liability consequences in case of an aircraft incident at an airport following these practices. In the case of runway and taxiway lighting fixtures, the use of a generic, non-approved lamp can render the photometric output of the fixture out of specification with disastrous results in light output and, consequently, safety of low visibility operations.

Intentionally Left Blank

CHAPTER 4. TEST EQUIPMENT.

4.0 INTRODUCTION.

An average electrician may have little day-to-day use for anything more than a voltmeter; however, when maintaining airport lighting series circuits, the equipment needs become more demanding. An airport electrician needs to be able to perform many tasks involving troubleshooting and calibration that are typically out of the norm for the average wireman. Series circuits operate at potentially high voltages and are prone to develop shorts and opens that require an advanced knowledge of the use of ohmmeters and insulation resistance testers (meggers) to properly trace the problem and get the lighting circuits back up and operating in a minimum of time. There is also a need for current measurements at relatively low currents (<20 amps) that require highly accurate and calibrated equipment. A small change in the output current in a series circuit can have a large effect on light output and lamp life. At maximum output of 6.6 amps at the lamp, a current change (increase or decrease) of 1% can change the light output of the lamp by as much as 5%. That same 1% change (increase) can result in a 20% decrease in lamp life. It is therefore obvious from these facts that accurate test equipment and proper knowledge of its usage are vital to the maintenance of the airfield lighting system. Due to the non-sinusoidal output waveform of many constant current regulators, it is imperative to verify the accuracy of all current measuring devices. Evaluate all equipment used for the calibration of regulators and have the equipment calibrated for the values to be measured (2.8 – 20 amps) by a certified calibration lab.

For maintenance purposes it is therefore recommended that every airport acquire at least a volt-ohm-meter, an insulation tester and an accurate true RMS measuring clamp-on AC ammeter or true RMS digital multimeter with an accurate clamp-on ammeter probe. These units are useful for various maintenance routines and are necessary for troubleshooting and calibration of constant current regulators and series lighting circuits.

4.1 TYPES OF EQUIPMENT AND USAGE.

4.1.1 Volt-Ohm-Milliammeter (VOM).

An analog VOM is a highly versatile piece of test instrument that is capable of measuring AC/DC voltages, resistance, and low values of DC current. The better quality units offer reasonable accuracy and ruggedness and are useful for making a large variety of measurements. The most common use of this instrument is for making resistance measurements on series circuits for the purpose of troubleshooting when a fault has occurred. An analog VOM is useful because of its ability to show fluctuating trends and rates and the ease with which it offers a go, no-go check when rapid troubleshooting is required. An analog VOM does have limitations however. Its relatively low-input impedance and susceptibility to interference make it unsuitable for some measurements, especially when dealing with electronic circuits or when working in an environment with RF (radio frequency) energy present. Also it must be remembered that a typical VOM should not be used for making current measurements in an airfield lighting series circuit because it does not possess the ability to make true RMS, high accuracy measurements.

4.1.1.1 Safety.

Safety must always be considered when using a VOM. Know the voltage levels and shock hazards related to all equipment to be tested. Be sure that the VOM has been tested and calibrated. Inspect and calibrate portable test instruments at least once a year. Check the condition of the VOM test leads before making any measurement. General recommendations for specific uses of a VOM are contained in the manufacturer's manual supplied with the equipment.

1. High-voltage measurements. Never try to take direct voltage measurements on power distribution circuits rated over 600 volts. Measurement of high voltage is accomplished by installing properly rated instrument transformers and meters.

2. Switch settings. When making voltage measurements on power and control circuits, be sure that the meter selector and range switches are in the correct position for the circuit under test before applying test leads to the circuit conductors. To prevent damage to the meter movement, always use a range that ensures less than full-scale deflection of the pointer. A 1/3 to mid-scale deflection of the pointer assures the most accurate readings.
3. Case insulation. Do not hold the VOM in the hand while taking the reading. Support the instrument on a flat surface. If holding the VOM is unavoidable, do not rely upon the insulation of the case.

4.1.2 Digital Multimeter (DMM).

A digital multimeter is another piece of essential test equipment for the airport electrician's toolbox. This versatile instrument can deliver high accuracy and, through the use of various accessories, the ability to make a wide range of measurements. The best advice when purchasing this or any type of test equipment is to buy the best you can possibly afford. Always make sure that the DMM you use is a true RMS type and that the accessories are of the highest accuracy (see Paragraph 4.1.5).

A DMM with a good quality amp-clamp accessory is a good combination for measuring the output current of constant current regulators. It is sometimes difficult to know whether the instrument you are using is accurate or not. Even though the DMM is rated as a true RMS instrument and has a high rated accuracy, the accessories may not be as accurate. Ensure that the accuracy of the DMM and all accessories are checked and calibrated annually by a certified calibration lab for the ranges to be measured. In the case of airport lighting series circuits, 2.8 to 20 amps is the range for verifying proper calibration.

All safety precautions listed for VOMs also apply to DMMs.

4.1.3 Insulation Resistance Tester (MegOhmMeter).

The insulation resistance tester or megohmmeter is a necessary tool for maintaining and troubleshooting underground airport lighting cables. Insulation resistance testers come in a variety of styles from the traditional hand-crank models to battery and AC mains powered versions. These instruments are used for testing the insulation resistance-to-ground of underground cables; for testing insulation resistance between conductors; and for testing resistance-to-ground or between windings of transformers, motors, regulators, etc. The battery powered models are the most prevalent and come in all shapes and sizes in both analog and digital readout. Most of the digital models have an analog bar graph to supplement the digital reading. Another consideration in selecting an insulation resistance tester is the output voltage. Some battery and line powered units now have selectable output voltages that can range as high as 5000 volts DC. As a minimum, select an insulation resistance tester with an output of 1000 volts DC. If possible, consider using a unit with higher maximum voltage output as this lends more possibilities of finding high resistance faults and more closely approximates the rated voltage of the cables and transformers. However, note that testing old cables in questionable condition and/or circuits that have been operating at much lower voltages may suffer damage from testing at voltages over 1000 volts. Exercise caution when testing older circuits for the first time.

4.1.3.1 Safety.

1. When preparing to make an insulation resistance test, first make a complete safety check. Make sure that equipment to be tested is disconnected from all power sources. Open all safety switches and lock out other control equipment so that the equipment cannot be accidentally energized.
2. If neutral or ground conductors must be disconnected, make sure they are not carrying current and that, when disconnected, no other equipment will lack protection.
3. Observe the voltage rating of the tester and take suitable precautions.
4. Large equipment and cable usually have sufficient capacitance to store a dangerous amount of energy from the test current. After taking resistance readings and before handling the test leads, allow any energy stored in the equipment to discharge by leaving the tester connected for at least 30 seconds before touching the leads. Many new testers will automatically discharge the equipment under test and give the user a

visual or audible indication when it is safe to remove the test leads. Consult the equipment manual for information on manufacturer's instructions.

5. Do not use the tester in an explosive atmosphere. An explosion may result if slight sparking is encountered when attaching or removing test leads, or as a result of arcing through or over defective insulation.

4.1.4 Underground Cable/Fault Locators.

A cable locator is an indispensable tool for quickly locating airport lighting cable and ducts. A cable locator normally consists of a transmitter which is either directly, or indirectly by means of an inductive coupler, attached to an underground cable and a receiver which is used to pick up the transmitted signal to follow the path of the cable. These devices are very handy for locating the path of a conductor while troubleshooting cables in PVC conduit and are even more necessary when dealing with direct buried cables. Whenever work on the airport requires digging of any kind it is necessary to utilize a locator to prevent inadvertent cutting of cables. Most of the receivers also incorporate the ability to locate 60 Hz AC cables without the necessity of applying a signal or tone to the conductor. If the airport circuits are supplied by direct-buried conductors or have direct-buried control cables, it is advisable to purchase a locator which also has the capability of locating ground faults. It should be noted, however, that faults in cables installed in conduit cannot be located using these devices. Cable locators that include fault-finding capability are normally equipped with an A-frame probe that is used with the receiver to determine the direction of a fault between the conductor or shield to ground.

4.1.4.1 Safety.

When using a direct connection to the conductor to be located or tested, always exercise care to ensure that the circuit supplying the conductor has been de-energized and locked out, and tagged.

4.1.5 Clamp-on Ammeter.

The stand-alone clamp-on ammeter is useful for measuring AC and sometimes DC current. Most of the modern instruments of this type are provided with plug-in leads to permit the instrument to be used as a voltmeter or as an ohmmeter. Ensure that the unit is a true-RMS type so as to deal properly with the sometimes distorted waveform output of some constant current regulators. Also the same warnings apply to these devices as to the DMM/clamp-on combination when it comes to accuracy of the instrument. Since most of these devices are rated to measure current far in excess of what you need to measure on airport lighting circuits, their accuracy at the low end of the measurement scale may be in question. Clamp-on devices having an accuracy of + or – 2 % or better should be used if at all possible as a small change in current can produce a large change in lamp light output. It may be beneficial to have a registered calibration laboratory check the instrument and calibrate it to the lower amp range.

4.1.5.1 Safety.

A clamp-on ammeter reduces operator exposure to high voltage. However, the operator must observe normal safety precautions to prevent coming in contact with exposed conductors when taking current readings.

4.1.6 AC Proximity Voltage Tester.

These small non-contact testers, sometimes referred to as "tickers," can be handy for detecting voltage present in insulated cables. Depending on the model, they may have a wide measurement range. They should not, however, be used to determine if an airfield lighting series circuit is energized (4.1.6.1). The reason for this is because of the behavior of voltage in a series circuit. The voltage is reduced by the various voltage drops (loads) present in the circuit until at some point near the middle of the circuit there is no measurable voltage although current flow is still present. Breaking the circuit at that point or at any point in the live series circuit can result in injury or death. See Paragraph 2.3.1.

4.1.6.1 Safety.

Do not rely on these units as the only instrument used to protect oneself from coming into contact with energized conductors. A good quality clamp-on ammeter device is the only safe way to check for an energized series lighting conductor. After checking for the presence of current with a clamp-on ammeter, an inductive proximity voltage measuring device may be used to detect the presence of induced voltage. Also, as with all test instruments used for measuring voltage or current, make sure that you test the device on a known live circuit before and after making any measurement of this kind.

4.1.7 Time Domain Reflectometer.

The Time Domain Reflectometer (TDR) was once a very expensive laboratory quality instrument used for testing control and coax cable systems. Now however, these instruments have evolved into less expensive hand-held units capable of pinpointing the location of opens or faults in long runs of twisted pair control cables. If your facility is using long runs of telephone type twisted pair cables for control of airfield lighting equipment from a remote control tower location, it may be useful to invest in one of these devices for troubleshooting purposes. The TDR applies a signal to the cable pair in question and can give readout in feet indicating the distance to the cable fault as well as a visual display of the cable run. This can save many hours of troubleshooting when trying to find a bad splice in a long run of control cable. The newest models have settings for testing power cables, data cables, coax cables, as well as telephone and control cables. Some of these units are capable of measuring cable lengths of up to 48,000 ft.

A similar device is the Optical Time Domain Reflectometer which is used to perform similar tests on optical fiber cable. With the advent of computerized control systems employing fiber optic networks for control of airfield lighting systems, the ability to troubleshoot these cable systems is becoming necessary. At the time of this writing, these instruments are still extremely high in price and probably not a justifiable expense to the average airport maintenance department. In most cases it may be more economical to employ outside contractors to perform any troubleshooting and repairs on fiber optic cable systems.

4.1.7.1 Safety.

As with other measurement devices that require direct connections to conductors, be sure to exercise a proper safety check to verify that the conductor or circuit under test has been de-energized and is locked-out and tagged.

4.1.8 Tone and Probe Tracing Sets.

Normally used by technicians employed in the telephone industry, these devices can be a great addition to the airfield electrician’s toolbox. The kits are inexpensive and can be used for many purposes at an airport to identify individual conductors whether in a control cable or individual power cables in a manhole or vault. The simple transmitter is connected directly to any un-energized conductor and injects a tone on the conductor that can be heard by using an inductive probe.

4.1.8.1 Safety.

As with other measurement devices that require direct connections to conductors, be sure to exercise a proper safety check to verify that the conductor or circuit under test has been de-energized and is locked-out and tagged.

4.1.9 Infrared Thermometer.

Infrared thermometers are hand-held devices that can give a direct temperature readout of any surface from several feet away. They can be aimed at the target via a laser target sight. In addition to identifying loose connections in panelboards, these instruments may be used for troubleshooting of ground faults in airfield lighting circuits. By measuring the temperature of different light bases on the runway or taxiway and comparing the temperature differential between light bases, it is possible to find the location of a ground fault if the cable and transformer assembly have been arcing and burning inside a light base.

4.1.9.1 Safety.

Since the use of an infrared thermometer requires no contact with the surface of the object to be measured, these devices are generally very safe to use. Follow manufacturer's instructions and avoid direct eye exposure to the laser sighting beam.

4.1.10 Portable Oil Dielectric Tester.

Most older constant regulators are oil filled for cooling. The oil acts as an insulator and therefore must be maintained. Dirt, sludge, and other contaminants will reduce the dielectric strength of the insulating oil causing a potential for failure of the transformer. Sample and test the oil as indicated in Paragraph 5.2.5. A portable oil tester may be a justifiable expense if the airport maintains a large number of oil-cooled regulators. Some of these test apparatus may include accessories for testing of rubber "hot" gloves. As an alternative, samples may be sent out to a testing lab or local electric utility for testing.

4.1.10.1 Safety.

Portable oil dielectric testers utilize high voltages up to 30 kV and extreme care must be taken operating this equipment. Always follow all manufacturer's operation and safety instructions.

4.1.11 Ground Rod Resistance Tester.

Ground rod resistance testers come in several styles and are necessary for checking and maintaining the effectiveness of grounding systems and counterpoise systems at the airport. These testers measure the resistance between the grounding system and the earth ground. Some of the newer models are simple clamp-on units capable of giving the resistance-to-ground of ground rods or grounding conductors by measuring the ground leakage current without disconnecting the grounding conductor under test. Follow manufacturer's instructions closely to obtain an accurate ground resistance reading, thus avoiding a false, lower than actual resistance-to-ground measurement that can result from incorrect use. The grounding system in question may be used for beacon towers, lighting vaults, engine generators, and for other lighted visual aids, or it may be a counterpoise system for underground cables. The maximum acceptable ground resistance is 25 ohms. It is preferable that the resistance be 10 ohms or less. In many locations, the water table is gradually falling. In these cases, the ground electrode systems that were effective when initially installed are no longer effective. This emphasizes the importance of a continuous program to periodically check the grounding system. It is not sufficient to check the grounding system only at the time of installation.

4.1.11.1 Safety.

A grounding system is a very important integral safety feature in airport lighting systems. To be effective, the grounding system must have a very low resistance-to-ground. The higher the inherent resistance of the grounding system, the greater the voltage that can build up on a grounded chassis or frame. When this built-up voltage discharges through a person, injury or death may result. For this reason, check the effectiveness of the grounding system regularly.

4.1.12 Mobile Photometric Measurement System.

Maintain the light output of runway lighting systems within specified limits to provide effective visual cues to the pilot while landing in low visibility conditions. Clean or service the lights when the brightness of the fixture is less than 70% of the minimum output required when operated at full intensity, per values listed for that fixture in AC 150/5345-46, Specification for Runway and Taxiway Light Fixtures. A fixture degraded below this is ineffective for high background brightness, low visibility conditions and should be targeted for maintenance. See Appendix A, Standards and Tolerances, Table 8.

In the past, *in situ* photometric measurements were only possible using a hand held spot meter. This method has proven to be very ineffective and can only detect gross differences between lights and cannot account for alignment errors. Now, however, mobile systems are available which can test individual fixtures within a lighting system at

high speed and with a high degree of accuracy. Some of these systems can produce individual iso-candela diagrams of individual lights to aid in troubleshooting and maintenance as well as indicate misaligned fixtures. Some systems can also provide GPS coordinates for each light on the runway to aid in locating deficient fixtures for cleaning or repair. Equipment used for photometric measurements must be of the highest quality and be proven capable of high accuracy and repeatability to avoid the collection of erroneous data.

CHAPTER 5. PREVENTIVE MAINTENANCE.

5.0 GENERAL.

This chapter discusses the preventive maintenance program for the visual aid facilities and equipment. It contains a Preventive Maintenance Inspection (PMI) schedule for each major item of equipment with step-by-step instructions for performing the PMI. The PMIs establish a recommended routine which may be altered to suit local conditions. General troubleshooting procedures for airport lighting systems are contained in Chapter 6. Corrective maintenance procedures for specific equipment will be found in the manufacturer's operating and maintenance instructions and are not included in this AC.

5.1 AIRPORT LIGHTING VAULT.

To perform the PMIs, as shown in Table 5.2, proceed as follows:

5.1.1 Daily Checks.

Check the operation of all controls. If the airport is equipped with a computer control system that allows control and monitoring from the maintenance shop or other remote location, verify the proper operation of all controls from that location.

5.1.2 Weekly Checks.

(1) Cleanliness. Check the general cleanliness of the vault. Sweep out the vault regularly. Keep it free from dust, dirt, sand, spider webs, insect nests, etc.
(2) Moisture. Check for any collection of moisture. If there is a drain in the floor, make sure that it is operating properly. Mop up moisture from the floor.
(3) Screens. Check screens on all ventilators. Repair or replace, as necessary, to keep out wasps and other nest-building insects. Check operation of ventilation fans and thermostat controls. If vault is equipped with air conditioning, check for proper operation of system and thermostat control in warm weather months.
(4) Storage. Check vault for improper use as a storeroom. Avoid storing spare parts, rags, etc., near the high-voltage equipment. If the vault has an attached room, use this room for storing spare lamps, fuses, rags, spare parts, etc.

5.1.3 Monthly Checks.

5.1.3.1 Insulation-Resistance Test.

Performing regular preventive maintenance checks on airfield lighting circuits is absolutely necessary for reliable operation of the system. Because of the potential of operating at very high voltages, the components of the series circuit are extremely susceptible to failure.

Perform insulation resistance tests on all airfield circuits on a monthly basis as a minimum. If the airport has circuits that fail regularly due to age or other reasons, consider weekly checks. Many potential failures can be found during daylight hours before they become a problem by making weekly PM insulation resistance checks a habit. Keep records in the regulator vault with the circuit identified as well as the date and results of the test. Provide space for notes as to special conditions such as weather conditions at the time of the test, recent lightning activity and to note failure locations and causes when found. A sample form is shown in Figure 5-1.

Insulation resistance test sets can be purchased that are operated by hand-crank, batteries, or on 120 volt AC supply. The battery operated sets are the most versatile. Hand-crank units are the least accurate as the operation of the instrument can vary significantly between operators. Take care in selecting a test set and potential output voltages.

As a minimum, the test set should have an output of 1000 volts DC. Test sets with outputs of 2500 VDC to 5000 VDC are also available and are superior at detecting high resistance faults. It should be noted, however, that when testing older circuits, especially circuits that normally operate at lower voltages, use of a 5000 VDC tester may show a fault in an otherwise undetected weak spot in a cable or transformer. It is therefore advisable, when testing at voltages higher than 1000 VDC, to be prepared to make immediate repairs if necessary.

When performing insulation resistance tests for preventive maintenance, it is necessary to be consistent in the way the tests are carried out from one session to the next. Test results may vary due to a number of circumstances. For instance, the test should be administered for the same length of time each time it is performed and at the same test voltage so that the results may be accurately compared.

A very important consideration when performing insulation resistance tests is the time required for the reading of insulation resistance to reach a maximum. The primary cause of delay in reaching full charge is known as the dielectric absorption effect. It may be a matter of several minutes before this is completed and for the reading to reach an absolute maximum. It is best to establish a minimum time for conducting the tests based on experience.

For short time readings of insulation resistance, operate the instrument for a definite length of time, either 30 seconds to 1 minute, and read at the end of that time. Make future tests with the same length of operating time.

Other variables such as moisture, weather, and time of day may affect the readings. Readings should ideally be taken after circuits have been de-energized for several hours. Readings may appear higher immediately after operating the circuit. This is a sign of deteriorating insulation in transformers and possibly cable that is allowing moisture to enter. Operating the circuits raises the temperature and drives moisture from the insulation resulting in an artificially higher reading.

There is no ideal value for insulation resistance readings on series circuits due to factors such as circuit length, age, etc. The best rule here is to base this decision on past experience with your own facility. Each circuit may be different based on age, manufacturer of cable and equipment, installation methods (direct buried or installed in conduit), local weather conditions, and amount of moisture normally present in the system. The decision of when to consider a circuit failing and in need of preventive maintenance repairs may vary from one circuit to another at the same facility. Generally speaking, any circuit that measures less than 1 megohm is certainly destined for rapid failure. The time it takes for a circuit to fail is affected by the output voltage of the regulator, type of fault and presence of moisture at the location of the fault. The larger the circuit size in kW, the higher the output voltage and hence, the more the condition of the insulation becomes critical. The important information is the deterioration of the resistance values from month to month and year to year. The resistance value inevitably declines over the service life of the circuit; a 10-20 percent decline per year may be considered normal. A yearly decline of 50 percent (4 percent monthly) or greater indicates the existence of a problem (such as a high resistance ground) or serious deterioration of the circuit insulation. In this instance the maintenance supervisor should consider performing troubleshooting to locate the problem (Chapter 6). A table for typical existing circuit loop resistance is shown in Table 5-1.

It should also be noted that the insulation resistance that is required for new installations will have a great effect on the ability of the maintenance staff to maintain the series lighting circuits after installation and acceptance. With newer cable installations being more frequently installed in conduit and base cans as opposed to direct burial, initial resistance values up to and in excess of 500 megohms are normally achievable and should be required.

Circuit Length in Feet	Suggested minimum resistance to ground in megohms
10,000 or less	50
10,000 to 20,000	40
20,000 or more	30

Table 5-1. Suggested Resistance Values for Maintenance

5.1.3.2 Input Voltage.

Measure the input voltage to the vault. Take this measurement at various times of the day and/or night since the demand on the commercial power network varies throughout the day. Record the input voltage of each phase for future reference. If it is out of tolerance, contact the power company and have them correct the problem.

AIRPORT LIGHTING CIRCUIT INSULATION RESISTANCE TEST RECORD

VAULT OR SUBSTATION # _____

CIRCUIT IDENTIFICATION _____

DATE	OHMS	WEATHER CONDITIONS AND COMMENTS	INITIALS

Figure 5-1. Sample Insulation Resistance Record

5.1.4 Semi-annual Checks.

5.1.4.1 Ground Resistance.

Perform a ground-resistance measurement for each item of equipment using a ground resistance tester. Record the readings and compare with previous readings to discover deterioration in the grounding system. The lower the resistance value, the better; a value of 5 to 10 ohms is desirable. If the resistance is greater than 25 ohms, immediate action must be taken to lower the resistance.

5.1.4.2 Primary High-Voltage Buses and Ground Buses.

Check the high-voltage bus installation with particular attention to the condition of the insulators, supports, and electrical connections. Keep the bus insulators wiped free of dust or any other deposits. Check the ground bus carefully throughout its entire length. If the bus or any ground connection to the bus is broken, make immediate repairs. De-energize the system before cleaning or repairing the bus.

5.1.4.3 Relays.

Inspect the protective relay, circuit selector switches, and auxiliary relay panels when servicing the vault equipment. Check the operation of these devices, clean the contacts, adjust release springs, and check contact arms and dash pots. Replace all unserviceable parts.

5.1.4.4 Oil Fuse Cutouts.

Check operation and electrical connections of the oil fuse cutouts. Check the contacts and check the oil level. Add oil when necessary. If fuses with replaceable links have failed, replace them with fuse links especially manufactured for this purpose. If the oil fuse cutouts have a manual operating lever, check the operation of the locking arrangement. Be sure the manual operating handle is locked in the “OFF” position before servicing vault equipment that is being supplied through the oil fuse cutout.

5.1.4.5 Oil Switches.

Check the operation of the oil switches. Be sure that the moveable handle on the oil switch, which has three positions, “MANUAL OFF,” “MANUAL ON,” and “AUTOMATIC,” is in the “AUTOMATIC” position at all times. This allows the switch to be remotely controlled. Check the contacts and oil level and service when necessary.

5.1.4.6 Power Transfer Switches.

Check operation of power transfer switches. Check contacts for dirt or corrosion.

5.1.4.7 Control Panel or Computer Control Equipment.

In some cases, an auxiliary control panel is installed in the vault, or a computer controlled system is installed along with a monitor interface that may provide control capabilities from the vault. In such cases, carefully check the operation of all parts of the panel. Clean all contacts and make sure all electrical connections are in good condition. Clean the interior of the panel carefully. If computer-controlled, inspect and clean all air filters associated with the cooling fans for the computers and uninterruptible power supply units if so equipped.

5.1.4.8 Photoelectric Time Switch.

If a photoelectric time switch is installed, maintain according to the manufacturer’s instructions. Check light levels with a photographic light meter to ensure that the control turns on and off at the proper ambient light levels.

5.1.4.9 Astronomic Time Switch.

If this switch is installed, service according to the manufacturer's instruction book. Inspect the operation, check clock for proper time, clean motor commutator and main switch contacts, and check all electrical connections. Since this is a precision instrument, the manufacturer or an authorized service representative should make repairs.

5.1.4.10 Radio-Control of Airport Lighting.

Check the operation of radio-controlled airport lighting by keying a portable transmitter and observing the actuation of the switching mechanism. If a fault is detected, follow the manufacturer's recommendation for repair or replacement.

5.1.4.11 Lightning Arresters.

Check the lightning arresters for burning, scorching, or other signs of failure. Inspect lightning arresters for damage after each lightning storm in the area.

5.1.4.12 Miscellaneous.

Inspect all miscellaneous vault items, such as circuit breakers, terminal blocks, potheads, vault lights, switches, etc. Make sure they are clean and all connections are tight. Inspect all safety board equipment and fire extinguishers.

5.1.5 Annual Checks.

5.1.5.1 Dielectric Checks.

Perform dielectric tests on oil in oil-filled equipment such as circuit breakers, regulators, and transformers as described in Paragraph 5.2.

5.1.5.2 Paint.

Check the condition of the paint on the equipment and vault. Repaint as necessary.

5.1.6 Recommended Vault Procedures.

5.1.6.1 Airport Plan.

Permanently post an airport plan in the vault to aid in testing and troubleshooting the field circuit loops. This airport plan (preferably behind glass) shows the field layout, marked with the location of all lights, cable runs, cable splices, and lighted visual aid equipment. Name and telephone number(s) of person(s) responsible for electrical maintenance for the airport should be located adjacent to the airport plan.

5.1.6.2 Schematic Diagram.

Display up-to-date diagrams of all power and control circuits in the vault. Display both a schematic diagram, which is a symbolic depiction of the logic of the circuit, and a wiring diagram, which is a detailed layout showing all wires and connections.

5.1.6.3 Vault Security.

Lock the vault, except during maintenance, to keep unauthorized personnel out. Contact with the high-voltage buses in an airport lighting vault is nearly always fatal. Allow only authorized personnel, experienced in the hazards of high voltage, in the vault.

5.1.6.4 High-Voltage Warning Signs.

Prominently display high-voltage warning signs, as described in Paragraph 2.10, at appropriate locations.

5.1.6.5 Safety Board.

Install safety boards, as described Paragraph 2.5, in the vault.

Maintenance Requirement	DAILY	WKLY	MTHLY	SMANY	ANNLY	UNSCH
1. Check control operation	X					
2. Check general cleanliness		X				
3. Check for moisture		X				
4. Check ventilator screens or air conditioner controls		X				
5. Inspect safety boards, safety equipment and fire extinguishers			X			
6. Check insulation resistance of all field circuits*			X			
7. Check input voltage to vault				X		
8. Check ground resistance				X		
9. Inspect and clean buses				X		
10. Check relay operation				X		
11. Check oil fuse cutouts				X		
12. Check oil switches				X		
13. Operate power transfer switches			X			
14. Check control panel or computer control equipment				X		
15. Check photoelectric switch				X		
16. Check astronomic time switch				X		
17. Check radio control of lighting equipment			X			
18. Check lightning arrestors				X		X
19. Inspect miscellaneous electrical equipment				X		
20. Test oil dielectric strength in transformers and regulators					X	
21. Paint equipment as necessary					X	X

* Weekly insulation resistance tests may be necessary for older circuits.

Table 5-2. Preventive Maintenance Inspection Schedule for Airport Lighting Vaults

5.2 CONSTANT CURRENT REGULATORS (CCRs).

Constant current regulators come in two basic types, air cooled and liquid filled. The two basic types of regulators can be further classified as either magnetic or electronic. Magnetic types typically utilize either a resonant circuit or a saturable reactor principle. In a resonant network circuit, the current output is proportional to the input voltage and therefore any change in input voltage will cause a corresponding change in output current. Most resonant network regulators are only manufactured in sizes less than 10 kW. We recommend that manufacturer's literature on the operation, theory of operation, and recommended maintenance procedures for the particular regulator(s) being used be obtained and kept on hand in the vault and maintenance office for reference.

Most constant current regulators manufactured today are reliable and reasonably trouble-free. However, do not be lulled into complacency when considering preventive maintenance of these vital components in the airport lighting

electrical system. A regulator failure without a spare backup regulator or spare parts on hand can shut down a vital runway or taxiway indefinitely.

Many times otherwise conscientious electricians have been surprised by a sudden failure or caught without spare parts for a piece of equipment. Unlike other elements in the electrical system that use commonly available parts, when a failure occurs of a component in a CCR, it is most likely an entire PC board that will have to be replaced and manufacturers may not have parts readily available. As a minimum, keep one type of each board and critical component such as silicon controlled rectifiers (SCRs) on hand for each type and size of CCR in use at the airport. This task has been made easier by some manufacturers as they make CCRs that use common control boards and components regardless of size, style, or type.

5.2.1 Daily Checks.

1. Check all control equipment for proper operation. Check remote control operation on each brightness step. This has been made easier at many airports due to the upgrade to computer controlled systems with an interface terminal at the maintenance shop office. Before the end of each shift, the supervisor can energize the airport lighting systems and monitor the CCRs for proper operation.

5.2.2 Weekly Checks.

1. Pay a visit to each electrical vault or substation at least once a week to check for cleanliness and general condition. We recommend making the visit while the circuits are in operation so as to notice any unusual noises or smells that could lead to discovering a problem with one of the CCRs. If the airport has a weekly schedule of performing insulation tests on field circuits or testing emergency generators, test and inspect the CCRs at this same time.

5.2.3 Monthly Checks.

1. Check and record input voltage and current. If the voltage is not within + or – 5% of the design voltage, notify the power company to correct the input voltage.

2. Check and record the output current of each CCR on each brightness step. Compare the values with the tolerances listed in Tables 5-3 & 5-4. Make sure you are using a high accuracy true RMS ammeter when making these measurements. If any are found to be out of tolerance, adjust CCR per manufacturer's instructions.

5.2.4 Semi-annual Checks.

1. If it is suspected that a circuit may be overloaded, a measurement of the output load may be made at this time. Evidence of overloading could be overheating, failure to produce rated current (6.6 or 20 A) at maximum brightness setting, or erratic behavior when operated with a transient load such as runway guard lights or runway end identifier lights (REILs).

!!CAUTION!!

MEASUREMENTS OF THE OUTPUT LOAD OF A CCR REQUIRE TAKING VOLTAGE MEASUREMENTS AT THE LOAD OUTPUT TERMINALS OF THE CCR. A CCR CAN DEVELOP AS MUCH AS 4545 VOLTS IN THE CASE OF A FULLY LOADED 30 kW CCR. NEVER ATTEMPT TO MEASURE THE VOLTAGE ACROSS THE OUTPUT OF A REGULATOR WITHOUT A LOAD CONNECTED. IN OPEN CIRCUITED CONDITIONS, THE VOLTAGE CAN REACH EXTREMELY HIGH VALUES BEFORE OPEN-CIRCUIT SHUT DOWN OF THE REGULATOR OCCURS. ONLY QUALIFIED ELECTRICIANS EXERCISING EXTREME CAUTION AND USING THE CORRECT INSTRUMENTS AND SAFETY PRECAUTIONS SHOULD ATTEMPT THESE MEASUREMENTS.

Measure voltage across the output of the CCR using a potential transformer having a ratio of 40:1 and a primary voltage rating of at least 4800 volts. Use a high accuracy true-RMS digital multimeter or power analyzer to measure the output of the potential transformer. Alternatively, many newer control and monitoring systems have provision for constant monitoring of output voltage, current and circuit load. Before measuring output load, it is imperative that a check be made to ensure that all the lamps are operating in the circuit. Open secondary windings on series transformers impose an inductive load on the regulator which can result in erratic behavior of the regulator and inaccurate measurements. Measure the output voltage across the output terminals with the normal load connected and the regulator operating at the highest brightness step. Multiply the output current (normally 6.6 or 20 A) by the voltage measured across the output of the regulator to obtain the approximate load (i.e. 4545 volts x 6.6 amps = 30Kw). This is a close approximation that assumes that the regulator is operating at a high power factor. Assure that the load value does not exceed the given kW rating of the regulator.

2. Visually inspect the regulator for any signs of loose connections or overheating. Be aware that many of the connections that should be inspected are not visible by merely opening the front access panel on the regulator. De-energize and lock out power to the regulator and remove the top, sides, or back panels depending on the type of CCR to access and inspect the connections. Pay special attention to line and load connections where high current is present and also inspect connections on capacitors closely. Look for any signs of discoloring that would indicate overheating and a loose connection and physically test any and all connections for tightness.

5.2.5 Annual Checks.

1. For regulators that are oil filled, make a dielectric strength test of the oil. Take at least a 1-pint sample of oil from the oil sampling or drain valve at the base of the regulator tank. Sediments may have settled to the bottom of the tank that could contaminate the sample. If such sediments are observed in the sample, take another sample to try to obtain a sample that is free of sediment or if possible, remove a sample from the top of the regulator tank. It is also very important to make sure that a clean vessel is used to obtain and store the sample so as not to contaminate it. An oil dielectric tester, as described in Chapter 4, may be used or if no facilities are available for making dielectric tests, contact the nearest power company equipped to perform these tests. If the oil is dirty or black, this is usually a sign of a major electrical problem within the tank which will require major work. If the oil dielectric strength is low, it should be replaced or filtered and dried to restore its dielectric strength. Wash out sludge deposits on the core and coil assembly and in the tank with clean dry oil. Models with an internal primary switch will tend to collect more sludge due to arcing under oil. Fill with oil to the proper level with the type oil approved by the regulator manufacturer. Dielectric strength (kV) for new oil should be 30kV+. A normal range for oil being tested should be 26-30 with 22 kV as the minimum acceptable level.

2. Perform a short circuit test as follows:

   Turn off power to the regulator. Short the output terminals using No. 10 AWG wire (or larger) across the output terminals. Turn on the regulator and advance intensity through each step. Read the output current on each step using an accurate true RMS ammeter. The output current should be within the tolerances shown in Tables 5-3 & 5-4.

3. If the current output is not within limits, check the voltage input to the regulator. It should be within +/-5 percent of rated input voltage. Be sure the correct voltage tap is used (on dry-type transformers). Turn off the regulator and lock out and tag out the input supply. Disconnect the short and reconnect output cables. Compare the short circuit values with those obtained from the monthly output current readings. If necessary, adjust output current according to the manufacturer's equipment maintenance manual.

4. Perform an open circuit test as follows:

   Perform this test only on those regulators with open circuit protective devices. Turn off power to the regulator and lock out the primary supply circuit. Disconnect cables from output terminals. Turn on power to the regulator. Advance the brightness selector switch to any step. The open-circuit protective device should

automatically operate within two seconds to turn off the regulator. Turn off the selector switch. Reset the open-circuit protective device. If the test is satisfactory, turn off regulator power and lock out primary supply and reconnect the output cables. Re-energize primary power to the regulator and set selector switch for automatic (remote) operation.

5. Perform an over-current test:

   If the regulator is equipped with over-current protection, follow the manufacturer's recommendations and procedures as outlined in the regulator manual for performing an over-current test.

Standard FAA CCR Output Currents vs. Allowable Range, Per FAA AC 150/5345-10E

Output Step	Nominal Output	Allowable Range
3	6.6 amps	6.40-6.70
2	5.5 amps	5.33-5.67
1	4.8 amps	4.66-4.94

Table 5-3. 3-Step CCR Output Tolerances

Output Step	Output 6.6 A Regulator	Allowable Range	Output 20 A Regulator	Allowable Range
5	6.6 amps	6.40-6.70	20.0 amps	19.40-20.30
4	5.2 amps	5.04-5.36	15.8 amps	15.33-16.27
3	4.1 amps	3.98-4.22	12.4 amps	12.03-12.77
2	3.4 amps	3.30-3.50	10.3 amps	9.99-10.61
1	2.8 amps	2.72-2.88	8.5 amps	8.24-8.76

Table 5-4. 5-Step CCR Output Tolerances

Maintenance Requirement	DAILY	WKLY	MTHLY	SMANLY	ANNLY	UNSCH
1. Check control circuits on all brightness steps	X					
2. Check condition and operation of regulator		X				
3. Check input voltage and current			X			
4. Check output current on each brightness step			X			
5. Check output load on regulator if needed				X		
6. Check relays, wiring and insulation				X		
7. Check dielectric strength of cooling oil (if used)					X	
8. Perform a short-circuit test					X	
9. Perform an open-circuit test (only on regulators with open circuit protection.					X	
10. Clean rust spots and repaint as necessary.						X

Table 5-5. Preventive Maintenance Inspection Schedule for Constant Current Regulators

5.3 LIGHT FIXTURE AND BASE MAINTENANCE.

5.3.1 Introduction.

Airport lighting fixtures for runway and taxiway use are divided into two broad categories: elevated and in-pavement. The maintenance requirements for each of these types are quite different. In-pavement lights generally require more maintenance than elevated lights to provide consistent performance and uniformity of light output. Elevated runway edge lights require more care in alignment so that the light output is aimed properly to meet photometric requirements. Several factors, however, are common to both types of fixtures. Dirt and other contaminants, particularly rubber on in-pavement lights, reduce light output and require periodic cleaning of the glassware or lens to assure optimum performance. Bases also require maintenance attention on a regular basis to ensure the integrity of the fixture/base assembly.

5.3.2 Runway and Taxiway Elevated Edge Lighting Systems.

Elevated lights, particularly taxiway lights, generally require less maintenance attention than the in-pavement lights such as runway centerline and touchdown zone lights. Taxiway edge lights normally only require periodic re-lamping. However, they are probably the most likely candidates for other types of damage on the airfield. Aircraft and ground vehicles, snow plows and mowers seem to have a particular affinity for running over elevated taxiway edge lights. It is for this reason that many airports are using in-pavement taxiway edge lights more frequently in areas of high traffic or frequent damage. The primary problems and hazards associated with the repair of elevated lights, when they have been run over or damaged, is from the glass and bare electrical conductors that may be exposed. Be sure to take proper safety precautions when handling these items (i.e. proper gloves and other safety equipment). Glass from broken taxiway globes is extremely sharp and poses a hazard both to the maintenance electrician and also as a significant Foreign Object Damage (FOD) hazard for aircraft. Probably the single biggest problem with repairing damaged elevated taxiway or runway lights is the removal of the existing frangible coupling. Reduce this problem by applying a coating of anti-seize compound or aluminum anti-oxidant to the threads before installing a new coupling.

Runway edge lights and threshold lights require more maintenance than taxiway lights. Runway edge lights may require periodic cleaning to remove dirt, mud, bird droppings, etc. The lenses of elevated runway edge lights can also become pitted and sand-blasted from jet blast and require replacement. When re-lamping or repairing runway edge lights, care must be taken to make sure that all lenses and filters are in their proper orientation and that the fixture itself is in the proper orientation relative to the runway. Most elevated runway edge light globes have an arrow on top that must be aimed perpendicular to the runway centerline. The beams of runway edge lights are aimed toward the runway centerline at 3.5 degrees. The beam is also aimed up 4 degrees from horizontal. Proper orientation of the fixture is necessary for this toe-in and required photometric output to be maintained. When re-lamping any type of fixture, always check the lamp before installing to make sure that it is the correct type and wattage. Many lamps look alike. Never re-lamp fixtures with the circuit energized. Hazards associated with this practice are covered in Chapter 2 of this document. Also, never use any lamp other than the lamp approved by the original equipment manufacturer of the fixture. Failure to do so may affect photometric output of the fixture and cause the fixture assembly to no longer meet FAA requirements.

5.3.2.1 Preventive Maintenance Inspection Procedures.

To perform the PMIs contained in Table 5-6, proceed as follows:

5.3.2.2 Daily Checks.

1. Perform a visual inspection of the system at twilight or night each day. This inspection consists of a driving patrol to visually check for dimly burning bulbs, burned-out lamps, and fixtures out of alignment. Record the locations of such fixtures and make corrections as soon as possible. Replace dimly burning lamps and burned-out lamps when the system is deactivated.

2. Check lenses for cleanliness and clean as required.

5.3.2.3 Monthly Checks.

1. Check the orientation of all lenses. Make this check by viewing the lights at night or by performing testing as outlined in (2.) below. Misaligned light units will appear dimmer or brighter than those that are properly aligned. The lenses may get out of adjustment when replacing lamps or when mowers and other vehicles strike the elevated lights.

2. Intensity Checks / Photometric Testing. Test equipment is now available to allow for the rapid and accurate testing of the output of both in-pavement and elevated runway lighting fixtures (Paragraph 4.1.12). In regards to elevated lighting, this type of testing primarily applies to high intensity runway edge lighting (HIRL). Regular photometric measurements are the only practical way of determining if the lights are emitting the specified amount of light and for determining misalignment errors. By the use of regular photometric measurements, maintenance of lighting fixtures may be targeted only where needed thereby saving resources and time while allowing the airport to be assured of meeting light output specifications, especially necessary in low-visibility conditions. Necessary frequency of photometric measurements will vary from facility to facility and from runway to runway depending upon the amount of traffic and age of the fixtures (see table 5-6). After some experience has been gained, the interval may be adjusted to operational needs. The frequency of measurement for a precision approach runway should be based on traffic density, the local pollution level, the reliability of the installed equipment and the continuous assessment of the results of the in-field measurements but in any case should not be less than twice a year. Photometric testing should be performed:

   (a) Before cleaning, re-lamping, or realignment to establish whether maintenance is necessary, and

   (b) After cleaning, realignment or repair, to check the effectiveness of the maintenance action. High intensity elevated runway edge lights that exhibit light output below 70% of the minimum light output required when operated at maximum intensity per AC 150/5345-46, Specification for Runway and Taxiway Light Fixtures, should be targeted for maintenance. Any light with measured output less than 70% of the minimum light output required per AC 150/5345-46 is ineffective for high background brightness, low visibility conditions. See Appendix A, Standards and Tolerances, Table 8.

3. Straighten, level, and align all lighting units that have been knocked out of alignment.

4. Check lamp sockets for cleanliness and good electrical connections. If moisture is present, replace the fixture gasket.

5. Inspect and clean the weep hole in the frangible coupling of stake-mounted lights.

5.3.2.4 Semi-annual Checks.

1. Check the ground elevation around lighting fixtures. The frangible point should be approximately 1 inch (2.5 cm) above the ground elevation. Grade around the fixture where necessary to maintain this fixture/grade relationship. Also, maintain the elevation of all lights the same height above the runway/taxiway pavement edge. Check the elevation more frequently during times of frequent freeze/thaw cycles. The height of the lights should not exceed 14 inches (35 cm) when located within 5 feet (1.5 m) of the runway or taxiway edge. In snow regions, where the lights are located beyond 5 feet (1.5 m) from the runway or taxiway edge, the lights may be raised 2 inches (5 cm) for each foot beyond the 5 foot (1.5 m) point. At the 10 foot (3 m) position, the lights may have a maximum height of 30 inches (75 cm). The increase in height is permitted only if any overhanging part of an aircraft expected to use the runway or taxiway could clear the light by at least 6 inches (15 cm) when the plane's main landing gear is located on any part of the runway or taxiway.

2. Check light bases and housings for evidence of moisture penetration. Check gaskets, seals, and clamps for deterioration and damage. Check the torque of light base cover bolts.

3. Check fixtures, bases, and housing for corrosion, rust and peeling paint.

5.3.2.5 Annual Checks.

1. Check each light fixture carefully for cracking, corrosion, or shorts.
2. Clean the contacts and ensure that lamp fits firmly into receptacle.
3. Check condition of all connections.
4. Check all gaskets on a leaky light unit and replace with new rubber gaskets.

5.3.2.6 Unscheduled Maintenance.

Remove snow from around the lighting fixtures as soon as possible after a snowfall so the light fixtures are not obscured. If heavy snowfalls are predicted, plant red flags or sticks of sufficient length adjacent to the edge lights to mark their location. The flags will facilitate snow removal and will lessen the damage to fixtures by snow removal equipment.

5.3.3 Maintenance Procedures.

The following paragraphs discuss general maintenance procedures for the runway and taxiway units that are not functioning:

5.3.3.1 Lamp Replacement.

With the lights operating, make a visual check to positively identify the lighting unit or units that are not functioning.

CAUTION:
De-energize the circuit and lock out the circuit or regulator so that the circuit cannot be energized from the remote lighting panel or other means before starting work on the lights. Remove S-1 switch cutouts if present.

1. Turn off the lights and lock out circuits. Install safety warning signs at appropriate locations.

2. With the replacement lamp at hand, open up the fixture and remove the old lamp.
   (a) Examine the old lamp to confirm the source of failure.
   (b) Compare the identification markings on the old and replacement lamps to verify that the replacement lamp is the correct type.
   (c) Inspect the lamp socket, connections, and wire insulation.
   (d) Check the light unit and base for evidence of leakage or condensation and remove any water present.
   (e) Replace fused film disc cutout, if used.
   (f) Install new lamps, ensuring that the lamp face is clean and free of oils, fingerprints, etc. Use a clean, dry, soft cloth and never touch the lamp with unprotected fingers.

3. Check filters, when used, for cracking or misalignment and replace or adjust as required.

4. Clean all reflectors, globes, filters, and covers as required. When hood or shield is used, check adjustment.

5. When closing the light, confirm that the gaskets are positioned for proper sealing. Tighten all screws, clamps, and fasteners.

6. Check frangible couplings for cracks.

7. Check the horizontal and vertical alignment of the lights for proper adjustment.

8. When all outages have been corrected, energize the circuit and make a visual check of the repaired units for proper operation. Record the repairs.

5.3.3.2 Spare Unit Replacement.

In some instances, it may be more convenient to fix defective edge lights by replacing the entire light with a spare unit. This will minimize the runway downtime and allow troubleshooting and refurbishment of the defective light at a more convenient location. Spare unit replacement is very convenient for repairing lights struck by lightning or vehicles.

5.3.3.3 Film Disc Cutouts.

Some of the older installations use fused film disc cutouts to bypass failed lamps. Some circuits that have more than one light on the secondary side of each isolating transformer use them to bypass a burned-out lamp and keep the other lamps on the transformer operating. When replacing lamps in these lights, also replace the film disc cutout. Use the disc cutout of proper type and size. The film disc is located within the light enclosure and is installed between spring-loaded terminals.

5.3.3.4 Inspection.

When replacing the lamp, inspect the light thoroughly for other damage. Check for water in bases or lights, cracked and chipped glassware, defective or incorrectly positioned gaskets, loose connections, cracked or deteriorated insulation, and misalignment of lights or shields.

5.3.3.5 Cleaning.

When changing lamps, clean the light fixture inside and outside, as required. Light surfaces must be kept clean to transmit light satisfactorily. In establishing a cleaning program, first consider the sources of the dirt problem. Many airfield lights are located at or near ground level and are subject to blowing dirt or dust, rain spattering, jet exhaust residue, bird droppings, corrosion, and heat and static attraction of dirt. In some cases, submersion or exposure to water may be a problem. Cleaning procedures will vary depending on the cause of the problem and its effect on the system. Cleaning problems may often be reduced by preventive measures.

5.3.3.6 Cleaning Schedule.

The cleaning schedule will vary at each location depending on such factors as environment, geographical location, and the types of lighting units. Clean each light thoroughly at least once a year. Regular photometric measurements may indicate a need for a more aggressive cleaning schedule.

5.3.3.7 Cleaning Procedures.

Wash glassware, reflectors, lenses, filters, lamps, and all optical surfaces. Washing may increase the light output by as much as 15 percent more than wiping with a dry cloth.

(a) Do not use strong alkaline or acid agents for cleaning.
(b) Do not use solutions that leave a film on the surface.
(c) Remove the unit when possible and clean in the shop.
(d) For reflectors or other optical surfaces that cannot be removed for cleaning, use alcohol or other cleaning agents that do not require rinsing or leave a residue.

5.3.3.8 Moisture.

(a) **Water and Condensation.** Water is the most common cause of problems in airfield lighting fixtures. In bases, water may cause grounding of the lamp or circuit; in the optical assembly it may submerge optical components, cause corrosion and deterioration, form condensation on optical surfaces, and accelerate the accumulation of

dirt on optical surfaces. Preventing water from entering bases is very difficult. The alternate heating and cooling of the lights can create a strong "breathing" effect, especially when the base is located in saturated ground. The water may also enter through conduits, along the conductor or the cable, through gaskets and seals, through damaged glassware, or through fine holes in the walls of the bases.

(b) **Protection From and Removal of Water.** The immediate problem of water in lights and bases is removal and prevention of reentry. In the light bases, the accumulated water can usually be drained or pumped out. Drain holes should be drilled or cleaned out if already present. Gaskets, seals, and clamps that may admit water should be checked. Chipped, cracked, or broken glassware should be replaced. If water cannot be eliminated from light bases, ensure all electrical connections and insulation are watertight and above the waterline. New conduit and base installations should be designed to drain and have a separate drainage system installed at low elevation points in the system.

(1) Before installing the cover plate, blow out cover bolt holes to make certain that fastening bolts are not anchored in sand or debris that prevents the cover from being torqued sufficiently on the gasket. Make sure the bolt holes have serviceable threads and that the gasket is in good condition and properly placed to minimize the possibility of moisture entry around their threads.

(2) The base flange bolts should be drawn down in opposite pairs until all are tightened to the recommended torque. Avoid excessive torque.

(3) Strikes and Blast Damage. Light units damaged by strikes from aircraft or vehicles, or by propeller or jet blasts, should be repaired or replaced immediately. Areas where this damage recurs should be checked frequently. A careful check should be made following damage of this type because the attaching cable may also be damaged. At locations where damage is frequent due to vehicular traffic, consider replacing elevated lights with approved in-pavement types.

(c) **Repair and Replacement.** When possible, replace the entire damaged unit. Simple repairs usually consist of the following:

(1) Remove the broken frangible coupling from the base cover.

(2) Connect the new light to the secondary connector.

(3) Install a new light on a new frangible coupling.

(4) Check for correct alignment; align as required.

(d) **Frangible Coupling Replacement.** Frangible couplings are used primarily to reduce damage to aircraft in case of a strike. They provide an intentional weak point and aid in preventing damage to other components. An open-end wrench, pipe wrench, cold chisel, and punch and hammer are usually sufficient to remove and install frangible couplings.

MAINTENANCE REQUIREMENT	DAILY	WKLY	MTHLY	SMANY	ANNLY	UNSCH
1. Inspect for outages; repair as necessary	X					
2. Check cleanliness of lenses	X					
3. Perform photometric testing (HIRL) and check light alignment and orientation			X			X
4. Re-align lights as needed			X			X
5. Clean fixtures and sockets						X
6. Check light elevation				X		
7. Check for moisture in lights				X		
8. Inspect fixture for rust, deterioration					X	
9. Check lamp fitting and clean contacts					X	
10. Check gaskets					X	
11. Remove snow and/or vegetation from around lights						X

Table 5-6. Preventive Maintenance Inspection Schedule for Runway and Taxiway Elevated Edge Lights.

5.3.4 Runway and Taxiway In-pavement Lighting Systems.

In-pavement or inset lights require more maintenance than elevated lights. Rubber deposits on the lens are the main cause of poor performance for fixtures installed in the runway. Jet fuel, deicing fluid, and other contaminants can also collect on the lens and deteriorate the light output, even on lights installed in taxiways.

When maintenance other than simple cleaning is required, the only way to ensure that in-pavement fixtures are properly maintained is to remove them from the runway or taxiway and replace with a refurbished unit. A quantity of spare fixtures equal to 10% of the installed quantity should be maintained for each type of fixture for this purpose. Many airports that have a large number of in-pavement lights have either built or modified trailers or vehicles to allow for fast, efficient removal and replacement of in-pavement fixtures. These dedicated lighting maintenance vehicles or trailers can be equipped with generators, air compressors, and proper tools to perform almost any task. Then the fixture may be removed and brought to the maintenance shop where it is disassembled and properly refurbished. Equipment is also now available to perform photometric testing in the maintenance shop to verify that a refurbished fixture is performing to specifications prior to being reinstalled in the runway or taxiway.

The main enemy of inset lights is water intrusion. More recently designed lighting fixtures have a much improved ability to keep water out of the optical assembly. Improved gasket materials and designs have drastically reduced the amount of maintenance required. When dealing with fixtures where water intrusion has become a problem, the first step is to determine where the water is entering the fixture. This can be in one of several places; the o-ring gasket sealing the fixture assembly, the gasket or sealing material around the lens, or the seal around the entrance point for the electrical conductors feeding the fixture. The best way to determine where the problem lies is to construct a testing jig by using a spare fixture. The method will vary depending on the type of fixture and the manufacturer. Aim to construct a method of pressurizing the fixture with air while submersing it in water. Five to ten pounds of air pressure is usually sufficient. The area with the bad seal will show up by the trail of air bubbles exiting the fixture. Care must be taken to regulate the pressure used to test the fixture because if too much pressure is applied, the lens can be blown out. NEVER apply air pressure to the fixture before submersing it in water as this could present a hazard if one of the lenses is blown out of the fixture. Some newer fixture designs come from the factory with an air valve stem attached to the bottom of the fixture. This fitting is used at the factory to pressure test the fixture during final assembly and can be used for maintenance also. Consult the manufacturer of fixture for recommended air pressure settings. Once the area of the leak is determined, the cause can be found and corrected. On older fixture designs, the lens may be sealed into the fixture using RTV sealant. If replacing this type of lens, be sure to use the appropriate sealant and primer as recommended by the fixture manufacturer. Usually a Dow

Corning RTV 106, high temperature silicone sealant is used. Most new fixture designs employ a lens with a replaceable gasket. This greatly improves the time and effort required to replace the lens. Inset light lenses should be replaced when they have become scratched or pitted.

When re-lamping either elevated or inset fixtures, do not to touch the glass of the lamp with the bare hands. Oils found in the skin will cause hot-spots on the lamp and lead to premature failure. When installing a new lamp, be sure that the correct orientation is kept. Some lamps have arrows to indicate positioning in the holder. Improper lamp positioning can result in improper or reduced photometric output of the fixture. When reassembling an inset fixture, follow all manufacturer's instructions. Remove rust and other deposits from the inside surfaces of the fixture by using an abrasive blasting cabinet with the proper abrasive. Glass beads or material such as ground walnut shells work well and, as long as proper care is taken, they will not harm the lens or wiring of the fixture. Do not use abrasive materials on reflector assemblies in the fixture. Reassemble the fixture after checking or replacing the gaskets or O-rings. A light coating of silicone grease is sometimes recommended for the O-rings.

When reinstalling the fixture, check the condition of o-ring gaskets installed on the flange ring (if supplied) and replace if necessary. Lubricate O-rings with a small amount of silicone grease. Make sure that new screws or bolts and lock washers are used to reinstall the fixture and tighten to the specified torque with a calibrated torque wrench. Remove and replace any broken bolts. Failure to do so can result in all the bolts breaking under the impact of a landing aircraft. Develop a systematic plan for checking the torque of inset fixtures on a regular basis, particularly on the runway.

5.3.4.1 Preventive Maintenance Inspection Procedures.

Because in-pavement lights are installed in the aircraft traffic area and are run over by aircraft, they are high maintenance items that require frequent attention to maintain specified performance. Additionally, their location below ground level makes them prone to water infiltration; this also requires frequent attention. These problems should be remembered when performing the PMIs contained in Table 5-7 and described below.

5.3.4.1.1 Daily Checks.

A driving patrol should be made daily at twilight. The inspector should look for burned-out or dimly burning lamps and record their location.

5.3.4.1.2 Weekly Checks.

A field electrician should inspect and service any lights reported as defective in the daily inspections. The preferred service method is to replace the in-pavement light unit with a spare and take the defective unit back to the shop for repair. The lighting circuit must be deactivated, locked-out and tagged-out before any maintenance is attempted on the lights. The following defects may be the cause of the malfunction:

(a) **No light**
   (1) The fixture should be removed and replaced with a refurbished unit and brought to the maintenance shop for relamping and refurbishing.
   (2) Electrical Failure. If the replacement light also fails to operate or a string of lights fail, the problem is probably in the series circuit. Troubleshooting procedures are contained in Chapter 6.

(b) Dim light
   (1) Dirty Light. The exposed optical surface of the in-pavement light gets dirty from exposure to aircraft traffic and weather. Clean the lights periodically, as described in Paragraph 5.3.4.1.7-2. This can also be a sign of a weak lamp and cause for fixture replacement.
   (2) Light Aiming. Shallow-base in-pavement light fixtures are often twisted out of alignment by aircraft landing or turning. Visually check any dimly burning lights to see if they are merely misaligned.
   (3) Water in the Fixture. Examine the lens for standing water or condensation behind the lens. If water is present, remove and service the fixture.

5.3.4.1.3 Monthly Checks.

Until a regular maintenance schedule is established, it may be necessary to perform the checks below on a monthly or even weekly basis at busy facilities. After some experience has been gained, the interval may be adjusted to meet operational needs. The frequency of measurement of lights for a precision approach runway should be based on traffic density, the local pollution level, the reliability of the installed equipment and the continuous assessment of the results of the in-field measurements but in any case should not be less than twice a year.

(a) **Cleaning.** Due to their position at ground level, in-pavement lights require frequent cleaning to maintain their specified performance. The frequency with which the lights must be cleaned depends on the light's location, weather conditions, and number of airport operations. Both rubber deposits and runway de-icing fluids have been shown to have an extremely detrimental effect on light output. Clean the lights when the light output of the fixture is less than 70 percent of the minimum required output when operated at maximum intensity per AC 150/5345-46, Specification for Runway and Taxiway Light Fixtures. A fixture degraded below this is ineffective for high background brightness, low visibility conditions.

(b) **Intensity Checks/Photometric Testing.** Test equipment is now available to allow for the rapid and accurate testing of the light output of both in-pavement and elevated runway lighting fixtures (Paragraph 4.1.12). Regular photometric measurements are the only practical way of determining if the lights are emitting the specified amount of light and for determining misalignment errors. By the use of regular photometric measurements, maintenance of runway lighting fixtures may be targeted only where needed thereby saving resources and time while allowing the airport to be assured of meeting light output specifications, especially in low-visibility conditions. This aids in providing a consistent lighting pattern to provide the pilot with the best possible, non-ambiguous visual cues when landing. Necessary frequency of photometric measurements will vary from facility to facility and from runway to runway depending on amount of traffic and age of fixtures. After experience has been gained with the measurement equipment, inspection schedules may be determined or modified. Due to the susceptibility of runway centerline lights to accumulate rubber deposits on the lens, weekly checks may be necessary. This is especially true for CAT II and CAT III runways where low-visibility operations are conducted. Any in-pavement runway light exhibiting a light output of less than 70% of the minimum output required when operated at maximum intensity per AC 150/5345-46, Specification for Runway and Taxiway Light Fixtures, is ineffective for high background brightness, low visibility conditions and should be targeted for cleaning or maintenance. Photometric testing should be performed:

(1) Before cleaning or re-lamping, to establish what maintenance is necessary, and

(2) After cleaning, or other maintenance actions, to track the effectiveness of the maintenance and determine the extent of degradation of the optical assembly. Lights that continue to exhibit output minimum levels should be scheduled for removal and servicing. See Appendix A, Standards and Tolerances, Table 8.

5.3.4.1.4 Bi-Monthly Checks.

(a) **Bolt Torque.** The torque of the bolts attaching the light to its base should be checked. The impact of aircraft wheels can loosen mounting bolts and cause misalignment or fixture damage; this is particularly troublesome in the touchdown zone.

5.3.4.1.5 Semi-annual Checks.

Check the shallow base installations for the presence of water. Any water should be removed and the base should be sealed to prevent its reentry. This check should be conducted more frequently in winter months since freezing may cause damage to the fixture by shearing the fixture hold-down bolts or rupturing the base. Having a dry light base is the exception rather than the rule. Water in light bases is very common, resulting from the miles of conduit that leak and slowly fill the system with water. To avoid water freezing in bases, place ETHA-foam (also known as closed cell foam) disks that are 2 inches thick by 8 inches diameter in the bases to displace the water. This prevents ice damage to the base, fixture, and transformer by allowing any remaining water to crush the ETHA-foam disks.

5.3.4.1.6 Unscheduled Maintenance.

Remove snow from around the lighting fixtures as soon as possible after a snowfall to prevent obscuring the light fixtures. Exercise extra care to prevent striking the lighting fixtures with snowplow blades. After snow removal operations, inspect all lighting fixtures and replace any damaged light assemblies. Whenever snowplows must traverse over in-pavement light fixtures, they should be traveling at less than 5 miles per hour or should lift the blades clear of the fixture. Rubber and plastic snowplow blades that are especially suited to plowing wet or slushy snow are available; rotary brooms are also recommended. If snow removal is a frequent winter job, high-strength steel light fixtures may be specified to better withstand the impact of snow plowing. Check wireways in saw kerfs. If wires are floating out, reinstall using wedges for anchoring wires. Space wedges 2 feet (60 cm) on center. Seal wireways using P-606 sealer.

MAINTENANCE REQUIREMENT	DAILY	WKLY	MTHLY	BIMHY	SMANY	ANNLY	UNSCH
1. Check for burned-out lamps or dimly burning lights	X						
2. Replace defective lights with refurbished units		X					
3. Clean lights with dirty lenses			X				X
4. Perform photometric testing of runway lighting systems			X				X
5. Check torque of mounting bolts				X			
6. Check for water in shallow light bases					X		
7. Remove snow from around fixtures							X
8. Check wires in saw kerfs							X

Table 5-7. Preventive Maintenance Schedule for In-pavement Runway and Taxiway Lighting

5.3.4.1.7 Maintenance Procedures.

Servicing in-pavement lighting should be scheduled to cause the minimum disruption to normal airport operations. For this reason, it is recommended that a number of spare fixtures be kept for installation in place of defective fixtures. The number of spare fixtures should be about 10 percent of the total number of each type of in pavement lights in use. By replacing the defective light with a spare unit, minimum time is spent on the runway; the defective light may be repaired in the shop. The procedures below give a generalized approach to repair; for more specific information about a particular light, consult the manufacturer's instruction book.

(a) **Light Removal**. The light fixture must be removed for relamping or base inspection. When removing the fixture for base inspection, be careful not to damage the connections to the isolation transformers. In cold weather, ice or snow may obstruct the bolt heads and make fixture removal difficult. Some facilities have constructed a wooden box, slightly larger than the fixture and a few inches tall. The box has an electric heating element inside and an open bottom. When it is necessary to remove a frozen fixture, place the box over it and connect the heating element to a power source (usually a generator on the back of a truck). When the box heats the fixture enough to melt the ice, removal may be easily accomplished.

(b) **Cleaning.** Several different techniques are available for cleaning the exterior glassware of inset lights. Some techniques require special equipment and are suited to large scale operations and require runway access with the light installed, while other techniques are more suited to bench cleaning of a light. The maintenance supervisor should select the method best adapted to the facility. Remember that not all techniques may be used with all lights; the manufacturer's recommendations contained in the instruction book are the final authority.
   (1) Manual. Commercially available cleaning detergents and pads can be used for removal of deposits from the lighting fixture lens unless prohibited by the manufacturer. Do not use abrasive materials such as sandpaper or emery cloth because they will scratch the glass. Solvents are available that will clean the

lens, but the solvent must be left on for a period of time to dissolve the deposit. The solvent used must be compatible with the lens sealing material. Commercial automotive paint rubbing or polishing compounds have been used successfully but care must be taken to not damage the lens when using abrasive cleaners. While manual techniques are well suited for bench cleaning of lights, they are very time consuming for cleaning lights when installed in pavement.

(2) Blasting with Ground Shells. Unless not recommended by the light fixture manual the cleaning can be done by using 20/30 grade, clean, ground walnut or pecan shells and clean, dry compressed air or nitrogen (nozzle pressure 85 psi). Figure 5-2 shows a typical example of how to clean the lighting fixture with shells.

- An average time of 10 seconds is required for cleaning the external surface of the lens.
- The average usage of ground walnut shells is 0.6 pound (0.25 kg) per fixture.
- The cleaning system shown is not available as an assembled unit; however, a commercially available air compressor with controls and gauges, a sandblaster unit, and abrasive resistant hoses may be used.
- After removal of the deposit from the lens, the fixture's light channel should be cleaned of shells with a blast of air, and the remaining dust wiped off with a clean cloth.

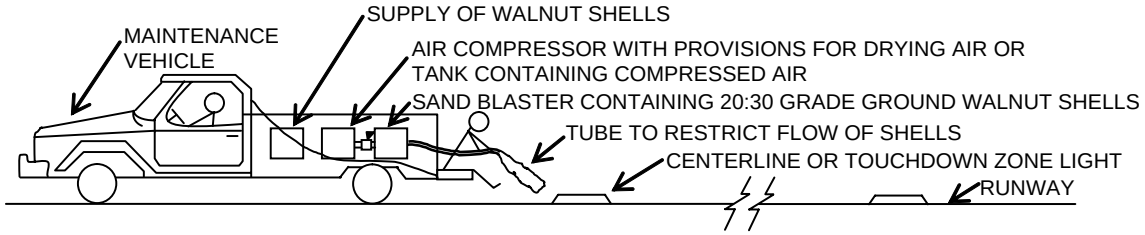

Figure 5-2. Cleaning Runway Centerline and Touchdown Zone Lights.

(c) **Light Aiming.** The in-pavement lights are aimed as part of the installation procedure. For lights installed on the tops of transformer housings, the aiming is fixed and nonadjustable. For lights installed on glue-in bases, the aiming may come out of alignment due to twisting of the light bases. The runway centerline lights should be aligned to within 2 degrees of a line parallel to the runway centerline. When reinstalling the base, use an adhesive compatible with the type of pavement. P-606 sealer has compounds that are compatible with both concrete and asphalt pavements; be sure to choose the correct mixture. If mobile photometric testing equipment is not available, the aiming of in-pavement lights may be checked by turning the lights on during foggy weather. The fog makes the lightbeam visible, and it is easy to tell if a light is properly oriented in such conditions. For touchdown zone lights, the light beam is offset 4 degrees toward the runway centerline. The aiming of touchdown zone lights may be judged by viewing the barrettes on either side of the runway while standing on the centerline. When viewing the barrettes on either side of the runway from some distance, any light appearing dimmer or brighter than the lights next to it may be improperly aimed and should be checked.

(d) **Light Cleaning and Sealing.** In-pavement lights gradually get dirty internally, and the internal optical surfaces should be cleaned when the light is disassembled for relamping or maintenance. Sandblasting equipment using glass beads may be used to clean rubber deposits off the casting after all removable parts have been taken off. Use a cleaning solution that does not leave a residue after drying. When re-lamping a light, be careful to handle the lamp only by the leads; fingerprints on the glass assembly will shorten lamp life. Mount lamps in brackets according to manufacturer's recommendations; using the wrong lamp or mounting it improperly can drastically reduce the light output of the fixture. When reassembling the light, replace all gaskets and O-rings exposed during the relamping process. Examine the optical prism to make sure that the sealer around the edges is in good shape. Replace the optical prism if it is cracked, scratched, or badly pitted.

(e) **Reinstallation.** If reinstalling a light fixture in a "dry system" (a conduit system without drains which depends on gaskets under the fixtures to keep out water), when mounting an in pavement unit on its base, care must be used to be sure that a watertight seal is obtained. Be sure the gasket and its mating surface are free of sand or grit; this is a common fault in servicing that allows moisture to enter. Graphite compound or gasket cement may be used on the gasket surfaces to ensure a watertight seal. When installing an in-pavement light in a "wet system" (a conduit system that employs drains at low points) the fixture is typically mounted directly on the base without a gasket. With either system, a supply of compressed air should be used to blow any sand or dirt out of bolt holes and mating surfaces to assure proper fit and bolt torque. Securely tighten all fixtures to the manufacturer's specified torque.

(f) **Photometric Measurements.** Photometric measurement of in-pavement lights is the most direct way of determining if they are emitting the specified amount of light. See Paragraph 5.3.4.1.3.-2.

5.4 ILLUMINATED RUNWAY AND TAXIWAY GUIDANCE SIGNS.

5.4.1 Cleaning.

Most signs require minimal maintenance aside from lamp replacement. However, with the intrusion of dust, dirt and water it is necessary to inspect and clean the interior of signs periodically to ensure proper light output. Mice and other rodents are known to set up house-keeping in signs. Frequently, this results in damage to wires and other components and the presence of grass, trash and other bedding material. For these reasons, inspect and clean airfield guidance signs at least twice a year.

5.4.2 Lamp Replacement.

As with all airport lighting systems, re-lamping should be accomplished with the sign de-energized to prevent the possibility of electric shock. This has been made an easier task by the addition of switches on signs to disconnect the power. The act of re-lamping has also been made easier and quicker by designs of both incandescent and fluorescent types that allow re-lamping without the use of tools.

5.4.3 Current Check.

At least twice a year, the current through the lamp circuit should be checked to verify that it is correct for the sign in question. If not correct for all steps, make current adjustments on the sign internal regulator board or if a Style 5 sign, check the circuit CCR to make sure it is operating at 5.5A.

5.5 ROTATING BEACONS.

5.5.1 Rotating Beacon Maintenance.

Many of the older high intensity 36-inch and 24-inch beacons have been refurbished and converted from incandescent lamps to metal halide lamps. Most new beacons use metal halide lamps. The metal halide lamps have the advantage of longer life making the requirement for an automatic lamp changer unnecessary. While this has greatly reduced the amount of maintenance formerly needed to keep the lamp changer assembly in good operation, it has not reduced the amount of attention that should be placed on beacon maintenance. Metal halide lamps have a 20,000 hour rated life expectancy and should be replaced every 2 ½ years. The standard MVR400/U lamps produce 36,000 lumens of light. The old incandescent 1000 watt lamps produced 22,000 lumens of light. The metal halide lamps will burn down to around 22,000 lumens of light after 2 ½ years of service at which time they should be replaced with a new lamp. In the case of the L-801 medium intensity beacons fitted with a 175 watt metal halide lamp, the lamps should be changed every 1 ½ to 2 years.

One other difference in beacons that are fitted with metal halide lamps rather than incandescent is that the lamp takes 4-5 minutes to reach complete brightness. This fact should be pointed out to controllers and operations personnel. If the beacon has been on and is shut off during operation, it will take 12-15 minutes for the lamp to cool off and re-fire.

5.5.2 Preventive Maintenance Inspections.

5.5.2.1 Daily Checks.

(a) Check the operation of the beacon. Verify dusk to dawn operation and operation of controls, either via photoelectric cell or manual.

(b) Count the revolutions per minute (rpm) of the beacon: should be either 6 or 12 rpm ± 1 rpm, depending on the type. Check for proper color and flash sequence.

(c) Check telltale indicator lamp (if equipped) to see if it is illuminated. If it is illuminated, it indicates that the beacon is operating on the reserve lamp (if equipped). The burned-out lamp should be replaced immediately.

5.5.2.2 Bi-Monthly Checks.

(a) **Lamp Changer (if equipped).** Check the operation of the lamp changer. De-energize the beacon circuit and remove the operating lamp from its receptacle. Energize the beacon circuit and observe that the beacon changes to the reserve lamp. De-energize the beacon circuit and re-install the lamp previously removed.

(b) **Slip Rings (if equipped).** Check the condition of the slip rings and brushes. Clean the slip rings and brushes per manufacturer's instructions. If sparking or pitting has occurred, smooth rings according to manufacturer's instructions. Avoid sanding as this produces a raw copper surface which shortens brush life. If the slip rings are deeply pitted, replace or have them turned down. Replace worn out brushes.

(c) **Clutch.** Test the clutch torque by hooking a spring scale in one of the handles on the side of the housing. The clutch should slip between 8 to 10 pounds or per manufacturer's instructions.

(d) **Lens Retainer.** Check the clamps or screws that secure the beacon lens (or cover) in place to be sure they are tight and the lens is properly seated.

(e) **Telltale Light.** Check the telltale light for a burned out lamp. Clean glassware if necessary.

(f) **Relays.** Check the operation of the relay and clean relay contacts if they are pitted or show evidence of poor contact. Replace relay if points are badly pitted.

(g) **Glassware.** Clean and polish all glassware, both inside and outside, using a type of non-abrasive cleaner that will not scratch the lens.

5.5.2.3 Semi-annual Checks.

(a) **Input Voltage.** Check the input voltage and record the reading. It should be within 5 percent of the rated lamp voltage. Voltage levels higher than a lamp's nominal rating will prematurely reduce the lamp's life proportionally to the increased voltage. Conversely, voltage levels lower than a lamp's nominal rating will reduce the lamp's light output proportionally to the reduced voltage. Make the measurement at the beacon lamp terminals, with all field equipment energized, so the voltage reading will reflect operating conditions. Beacon lamps are very sensitive to voltage changes. A drop of 10 percent will reduce the light output by 31 percent while a rise of 10 percent will shorten the lamp life 72 percent.

(b) **Lamp Focus and Beam Elevation.** Verify that beacon beam is narrow, well defined and projects horizontally. Check that the elevation setting has not slipped. Normal elevation setting for FAA beacons is 3½ degrees.

Beam elevation can normally be adjusted by lowering the lamp mounting position to elevate the beam or raising the lamp position to lower the beam.

(c) Lubrication. Beacons with a grease fitting on the vertical main shaft should be lubricated twice a year under ordinary operation or as directed by the manufacturer. Motors supplied with oil cups should be lubricated at the same time with SAE 20 oil. If there are no cups, the motor has sealed bearings and requires no lubrication. Ring gears should have a small amount of grease applied per manufacturer's recommendation. **Caution: Using an excessive amount of grease will result in its dropping down upon the slip rings and causing poor contact and arcing.**

(d) **Drive Belt (if equipped).** Check condition and tension of drive belt and adjust or replace if necessary.

(e) **Lightning Protection System.** Check the lightning rod connection for tightness and check the condition of the down conductor for corrosion or damage. Check and record the ground resistance. Compare the reading with the previous ground resistance checks. Reading must be less than 25 ohms. If the reading exceeds 25 ohms, immediate action must be taken to correct the grounding problem.

5.5.2.4 Annual Checks.

(a) **Base Level**. Check the level of the beacon in four directions. Make corrections as necessary.

(b) **Gears.** Clean the old grease from the gears. When installing new grease, observe the caution statement above.

(c) **Wiring.** Inspect all wiring, electrical connections and relays for abrasions, breaks and loose connections. Check terminal lugs for tight electrical connection. Inspect conduit for loose supports and connections. Replace broken brackets.

(d) **Weatherproofing and gaskets.** Check the condition of the weather-proofing and gaskets. Replace gaskets when cracked or deteriorated. Before installing new gaskets, clean the gasket channels and seats thoroughly. When it is necessary to secure the gasket with rubber cement, coat both the gasket and seat with appropriate cement and permitted to dry until tacky before the gasket is positioned.

Maintenance Requirement	DAILY	WKLY	MTHLY	BIMHY	QTRLY	SMANY	ANNLY
1. Check for beacon operation and proper color sequence.	X						
2. Count rpm of beacon.	X						
3. Check telltale indicator lamp for reserve lamp status.	X						
4. Check operation of the lamp-changer.				X			
5. Check slip rings and brushes.				X			
6. Test the clutch torque.				X			
7. Check lens retainers.				X			
8. Check telltale indicator lamp.				X			
9. Check operation of relays.				X			
10. Clean and polish glassware.				X			
11. Check and record input voltage.						X	
12. Check lamp focus and beam elevation.						X	
13. Lubricate main shaft, motor, ring gear, and padlocks.						X	
14. Check operation of electrical switches and contacts.						X	
15. Check lightning arresters and grounding system.						X	
16. Check power meter.						X	
17. Check level of base.							X
18. Clean and re-grease gears.							X
19. Inspect wiring, lugs, and conduit.							X
20. Check weatherproofing and gaskets.							X

Table 5-8. Preventive Maintenance Schedule for Rotating Beacons

5.6 LIGHTED WIND CONE ASSEMBLIES.

5.6.1 Preventive Maintenance Inspections.

5.6.1.1 Daily Checks.

(a) Visually check to see that all the lights are burning properly each night. If the lamps burn dimly, the voltage is probably too low. If the lamps burn out too frequently, the voltage is probably too high. The voltage should be 120 volts ± 5 percent volts AC or as defined in the manufacturer's specifications. Many of these supplemental wind cones are fed from the runway edge light series circuit via a power adapter and consequently, the voltage to the lamps and the brightness of the lamps may vary slightly with a change in runway light intensity.

(b) If a photocell is used, cover it and verify that the lights turn on.

5.6.1.2 Monthly Checks.

(a) Check the cone assembly to see that it swings freely throughout the 360 degree travel.

(b) Check the condition of the wind cone fabric. The fabric of the cone should be carefully examined at close range. The fabric should be completely replaced when it is badly worn, rotted, soiled, or faded in color.

(c) Check to make sure that the movement of the wind cone is not impeded by vegetation.

5.6.1.3 Bi-monthly Checks.

(a) All the lamps may be replaced after 80 percent of the rated life and prior to 90 percent of the rated lamp life. However, if daily operational checks are being made, this may not be necessary but it would be advisable to change all of the lamps at the same time to prevent recurring maintenance visits.

(b) The globes should be cleaned when replacing the lamps.

5.6.1.4 Semi-annual Checks.

(a) Check the bearings to see if they need lubricating. An application of light grease should be sufficient. In areas exposed to extreme dust, clean the bearings and repack with light grease. In freezing weather, the grease becomes very viscous and action of the wind cone in light winds will often become sluggish. During such weather, it may be necessary to completely clean the bearings or grease and lubricate them with light oil.

(b) Take an insulation reading on the underground feeder if wired from a parallel source and record the results. Compare results to previous readings to look for signs of insulation deterioration. If powered from a power adapter connected to a series lighting circuit, check the voltage at each output step of the series circuit to make sure the power adapter is still functioning within manufacturer's parameters.

5.6.1.6 Annual Check.

(a) Check the assembly base securing bolts for tightness. Tighten as required.

(b) Check the wiring at the hinged area or check the slip ring connections if internally lighted. If frayed, loose, or pitted, repair or replace.

(c) Check the ground system for loose connections.

(d) Test the resistance of the grounding system. It should measure 25 ohms to ground or less.

(e) Check the condition of the paint on the wind cone structure. Touch up or repaint as required.

Maintenance Requirement	DAILY	WKLY	MTHLY	BIMHY	SMANY	ANNLY	UNSCH
1. Check lamp operation.	X						
2. Check photocell operation.	X						
3. Check for freedom of motion of wind cone frame.			X				
4. Check condition of wind cone fabric.			X				
5. Check lamp age for scheduled replacement.				X			
6. Clean glassware.				X			
7. Check paint on segmented circle.				X			
8. Clean and grease bearings.					X		
9. Read insulation resistance.					X		
10. Check mounting bolts.						X	
11. Check wiring at hinge.						X	
12. Check grounding system resistance.						X	
13. Check paint on wind cone structure.						X	
14. Remove vegetation and check condition at foundation.							X

Table 5-9. Preventive Maintenance Schedule for Lighted Wind Cones.

5.7 PRECISION APPROACH PATH INDICATOR (PAPI) SYSTEM.

5.7.1 Preventive Maintenance Inspection Procedures.

A typical layout of the PAPI system is shown in Figure 5.3.

5.7.1.1 Daily Checks.

Confirm all lamps are burning and are of equal brightness. Adequate spare lamps should be available to permit a complete replacement of all lamps in the system. Spare bypass fuses, if used, should also be stocked. Lamps should be replaced immediately if they burn out or become darkened. If the PAPI uses bypass fuses, never replace a lamp until the associated fuse is checked.

5.7.1.2 Monthly Checks.

1. Check operation of controls. Check photocell brightness control and runway light circuit interlock (if used), radio control (if used), and/or remote control switch.

2. Check for damage by mowers, snowplows, etc.

3. Clean lamps and filters.

4. Visually check mechanical parts for cleanliness, burned wires or connections, cracked insulators, lamps or filters, etc.

5. Check if the lightning arresters and/or surge suppressors are scorched or show other signs of being burned out, and replace as necessary. Also, check after electrical storms.

6. Check the lamp boxes and adapter units for damage or debris from water, mice, wasps, bird nests, spider webs, etc., and clean or repair as needed.

7. Check for burrows or other signs of rodent activity in vicinity of cables; take steps to discourage their presence to minimize likelihood of cable damage.

8. If an adapter unit is used, read and record the output current and the input voltage to the adapter unit.

9. Check the horizontal and lateral alignment of the light boxes, and check the aiming (vertical angle) with the PAPI aiming instrument. Record the angle setting and the date in a maintenance log. It is particularly important to check aiming frequently whenever the soil freezes or thaws or has a change in moisture content (especially clay soils).

10. Check leveling and operating of tilt switch - if applicable.

5.7.1.3 Quarterly Checks.

Check the obstacle-free approach plane for clearance from tree growth, new towers, pole lines, or other obstacles. The obstacle free plane is 4 miles long and extends 10 degrees on either side of the runway centerline.

5.7.1.4 Semi-annual Checks.

1. Check insulation resistance of underground cables and record the results.
2. Check resistance of the grounding system and record the results.

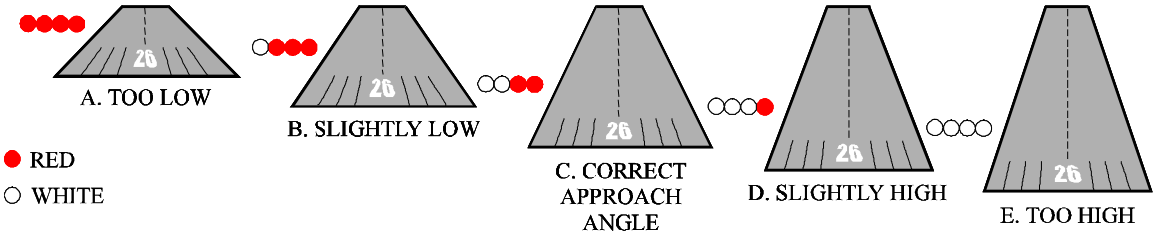

PAPI PATTERNS AS SEEN FROM THE APPROACH ZONE

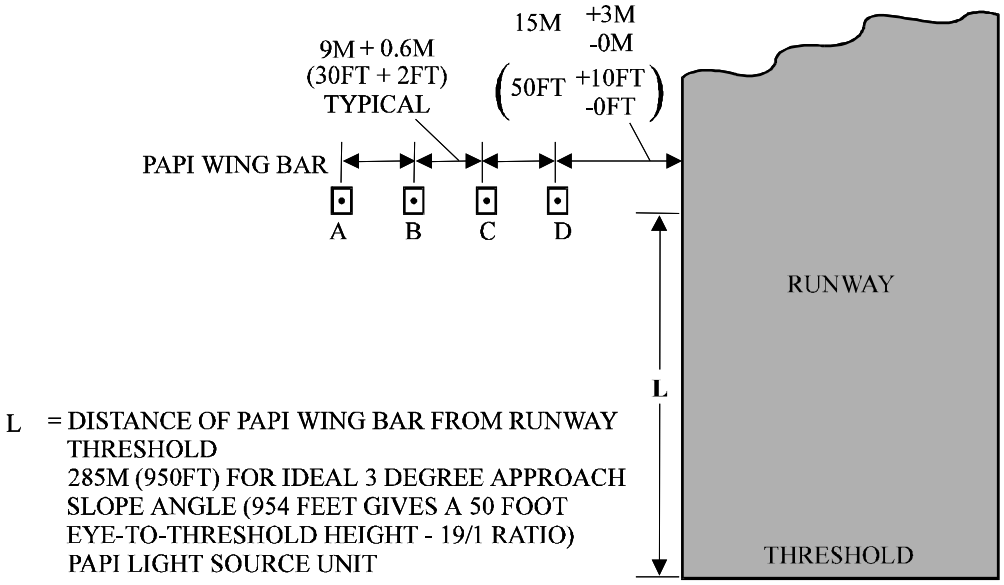

Figure 5-3. PAPI Configuration.

Maintenance Requirement	DAILY	WKLY	MTHLY	QTRLY	SMANY	ANNLY	UNSCH
1. Check lamps for operation.	X						
2. Check operation of controls.			X				
3. Check for damage by service vehicles or aircraft.			X				
4. Clean lamps and filters.			X				
5. Check mechanical parts for damage.			X				
6. Check lightning arresters.			X				
7. Check for water damage or insect infestation.			X				
8. Check for presence of rodents.			X				
9. Record output current and input voltage of adapter (if used).			X				
10. Check alignment and aiming of light boxes.			X				
11. Check leveling and operation of tilt switch.			X				
12. Check integrity of obstacle-free approach plane.				X			
13. Check insulation resistance of underground cables.					X		
14. Check resistance of grounding system.					X		

Table 5-10. Preventive Maintenance Schedule for PAPI (Precision Approach Path Indicator).

5.7.2 Maintenance Procedures.

5.7.2.1 Adjustment of the Vertical Aiming.

This adjustment is performed by using a clinometer. Clinometers are normally supplied with the PAPI or may be purchased from the PAPI manufacturer. Handle these precision instruments carefully. Make sure the aiming device is the one supplied with the PAPI light units.

1. Check the manufacturer's manual (supplied with the units) for the procedures used to check each PAPI unit for proper aiming angle. Follow the procedures recommended for using the manufacturer's leveling device.

2. Stand in front of the PAPI units (approximately 50 feet away) and check that the light changes color simultaneously along the whole width of each unit. If not, horizontal leveling was not done properly, the red filters are out of position, or the box is warped.

3. Check the tilt switch on all units (where provided) by placing the small level on the marked top surface of the tilt switch and adjusting the tilt switch if necessary. If the tilt switch shuts off the power when it is level, the tilt switch should be replaced. The main switch may have to be toggled off and on to reset tilt switch circuit. For tolerances, refer to the manufacturer's installation manual.

5.7.2.2 Check of Adapter Unit Current Output.

1. With system on, adjust day current to 6.4 to 6.6 amperes.

2. Cover photocell with a heavy glove or other dark material, wait for time delay to de-energize, and read current. If the system has a night adjustment, set current to 4.8 to 5.0 amperes.

3. Remove covering from photocell. The lights should switch back to day brightness after a short time delay (15 seconds to 1 minute).

5.8 VISUAL APPROACH SLOPE INDICATOR (VASI).

Some facilities have VASI systems which are currently being replaced with PAPI systems. The procedures in Table 5-10 are applicable, for the most part, for VASI as well. Check the manufacturer's maintenance manual for unique procedures applicable for the system installed, as most are old and replacement parts are not always available.

5.8.1 Preventive Maintenance Inspection Procedures.

To perform the PMIs contained in Table 5-11, proceed as follows:

5.8.1.1 Daily Checks.

Check that all lamps are burning and are of equal brightness. Adequate spare lamps should be available to permit a complete replacement of all lamps in the system. Spare bypass (grasshopper) fuses, if used, should also be stocked. Lamps should be replaced immediately if they burn out or become darkened. If the VASI uses bypass fuses, never replace a lamp until the associated fuse is checked.

5.8.1.2 Monthly Checks.

1. Check operation of controls. Check photocell brightness control and runway light circuit interlock (if used), radio control (if used), and/or remote control switch.

2. Check for damage by mowers, snowplows, etc.

3. Clean lamps and filters.

4. Visually check mechanical parts for cleanliness, burned wires or connections, cracked insulators, lamps or filters, etc.

5. Check if lightning arresters and/or surge suppressors are scorched or show other signs of being burned out and replace as necessary. Also, check after electrical storms.

6. Check for damage or debris from water, mice, wasps, bird nests, spider webs, etc., in lamp boxes and adapter units and clean or repair as needed.

7. Check for burrows or other signs of rodent activity in vicinity of cables; take steps to discourage their presence to minimize likelihood of cable damage.

8. If an adapter unit is used, read and record the output current and the input voltage to the adapter unit

9. Check the horizontal and lateral alignment of the light boxes, and check the aiming (vertical angle) with the VASI aiming bar. Record the angle setting and the date in a maintenance log. It is particularly important to check aiming frequently whenever the soil freezes or thaws or has a change in moisture content (especially clay soils).

10. Check leveling and operation of tilt switch (used in VASI-2 and some VASI-4 installations).

5.8.1.3 Quarterly Checks.

Check the obstacle-free approach plane for clearance from tree growth, new towers, pole lines, or other obstacles. The obstacle free plane starts at the first VASI light bar and extends over the approach area at an angle one degree lower than that of the first VASI bar. The obstacle free plane is 4 miles long and extends 10 degrees on either side of the runway centerline.

5.8.1.4 Semi-annual Checks.

1. Check insulation resistance of underground cables and record the results.

2. Check resistance of the grounding system and record the results.

5.8.2 Maintenance Procedures.

5.8.2.1 Adjustment of the Vertical Aiming.

This is normally done with an aiming bar, calibration bar, and small (machinist's) level. Handle these precision instruments carefully. Make sure the aiming bar is the one supplied with the VASI light units. The following steps should be followed each time the VASI is checked.

1. Place the calibration bar on a rigid surface that is approximately level, such as a concrete floor or a table or counter that is sitting on a concrete floor. Most wooden floors will deflect enough under one person's weight to make it impossible to level accurately the calibration bar.

2. Place the small level on the calibration bar and level it with the adjustable feet, both in the linear and transverse directions.

3. Turn the small level 180 degrees to check for centering of the bubble. If it does not check when reversed, adjust the small level so that the bubble will remain centered when the small level is reversed.

4. Place the aiming bar on the calibration bar and check that its spirit level remains centered in the 0-degree, 3-degree, and 6-degree positions and settings. Adjust spirit level if necessary to center the bubble. If the bubble cannot be centered at each of the three angles, the aiming bar should be replaced.

5. Place the instruments in the carrying case for transporting out to the VASI boxes.

6. Place the small level on the bottom center of the aperture (light slot) at the front of the box and level the box transversely with the two front adjusting (mounting) screws.

7. Set the proper angle on the aiming bar (usually 2½ degrees for light bar No. 1, closest to runway end, and 3 degrees for light bar No. 2) and insert through the aperture so the end of the aiming bar rests on the transition bar.

8. With aiming bar in line with left-hand lamp, adjust left rear adjusting screw. Move the aiming bar to the right side of box and adjust right rear screw. Repeat for left and right side until bubble is centered at each position.

9. Recheck transverse leveling, and recheck longitudinal leveling with the aiming bar in center of light box.

10. Stand in front of the VASI box (approximately 50 feet away) and check that the light changes color simultaneously along with the whole width of the unit. If not, either the leveling was not done properly, the box is warped, or the transition bar is not in its proper place.

11. Check the tilt switch on all VASI-2 systems and VASI-4 systems (where provided) by placing the small level on the marked top surface of the tilt switch and adjusting the tilt switch if necessary. If the tilt switch shuts off the power when it is level, the tilt switch should be replaced. The main switch may have to be turned off, and back on, to reset tilt switch circuit.

5.8.2.2 Check of Adapter Unit Current Output.

1. With system on, adjust day current to 6.4 to 6.6 amperes.

2. Cover photocell with a heavy glove or other dark material, wait for time delay to de-energize, and read current. If the VASI has a night adjustment, set current to 4.8 to 5.0 amperes.

3. Remove covering from photocell. The lights should switch back to day brightness after a short time delay (15 seconds to 1 minute).

MAINTENANCE REQUIREMENT	DAILY	MTHLY	QRTLY	SMANY
1. Check lamps for operation	X			
2. Check operation of controls		X		
3. Check for damage by vehicles or aircraft		X		
4. Clean lamps and filters		X		
5. Check mechanical parts for damage		X		
6. Check lightning arrester		X		
7. Check for water damage or insect infestation		X		
8. Check for presence of rodents		X		
9. Record output current and input voltage of adapter (if used)		X		
10. Check alignment and aiming of light boxes		X		
11. Check leveling and operation of tilt switch		X		
12. Check integrity of obstacle-free approach plane			X	
13. Check insulation resistance of underground cables			X	
14. Check resistance of grounding systems				X

Table 5-11. Preventive Maintenance Schedule for VASI (Visual Approach Slope Indicator)

5.9 RUNWAY END IDENTIFIER LIGHTS (REILs).

5.9.1 Preventive Maintenance Inspection Procedures.

A typical layout of the REIL System is shown in Figure 5-4. To perform the PMIs contained in Table 5-12, proceed as follows:

5.9.1.1 Daily Checks.

1. Check that lamps are operating and are flashing in proper sequence.

5.9.1.2 Bi-monthly Checks.

1. Check the controls for proper operation. Observe operation on each intensity step.

2. Check cleanliness of optical surfaces, both interior and exterior.

3. Check for damage or misaligned lights.

4. Check interlock device on door of each cabinet. Verify that shutdown occurs when each door is opened.

5. Check for vegetation or other obstruction around lights.

5.9.1.3 Semi-annual Checks.

1. Check the interior of control panel and flasher cabinets for cleanliness and moisture.

2. Check electrical contacts and connections to ensure tightness.

3. Check and adjust alignment and elevation of light units. For omnidirectional units, check only the elevation. For unidirectional REILs, check alignment and elevation using the following tools:

   (a) A plywood triangle cut to angles of 15 degrees, 80 degrees, and 85 degrees.

   (b) A 4-inch line level.

4. The procedure to align the unidirectional REIL is as follows:

   (a) To check the 15-degree toe-out, hold the triangle horizontally against the face with the 15-degree angle pointed toward the other light unit. By aligning the outside edge of the triangle to point at the opposite light unit, 15-degree toe-out is achieved.

   (b) To attain the 10-degree vertical aiming, the 80-degree angle is placed against the flat portion of the REIL face with the 15-degree point-down. When the line level shows the upper edge of the triangle level, the REIL is 10 degrees up from the horizontal (see Figure 5.5).

5. Check baffles if used on REIL. Where baffles are installed, the light units should be aimed at an angle of 3 degrees vertical and 10 degrees toed out. The louvers should be sloped down 10 degrees toward the runway and down 5 degrees toward the approaching aircraft. The louvers should be painted black to lower the reflected light.

5.9.1.4 Annual Checks.

1. Make a careful inspection of all power distribution equipment and protective devices at terminal pole and lights.

2. Check insulation resistance of power cables.

3. Check the ground resistance at the terminal pole and each light fixture.

4. Service timer motor and contacts (if used).

5. Repaint as required.

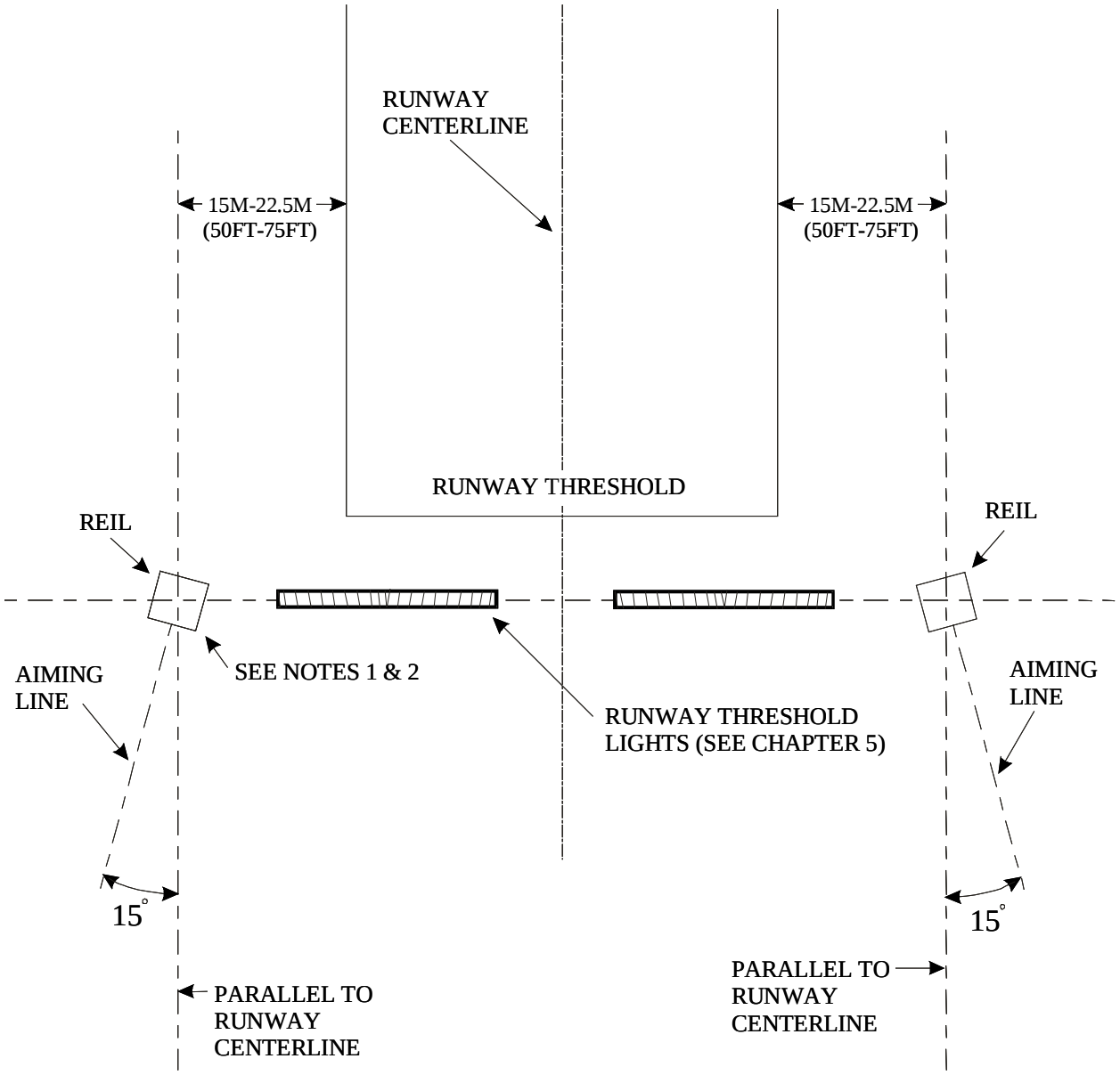

NOTES:

1. LONGITUDINAL LOCATION OF REIL FIXTURES MAY BE VARIED FROM IN LINE WITH THRESHOLD TO 15M (50FT) DOWNWIND OF THRESHOLD. BOTH FIXTURES WILL BE AT THE SAME DISTANCE.

2. UNIDIRECTIONAL FIXTURE IS ILLUSTRATED; FOR OMNIDIRECTIONAL FIXTURE IGNORE HORIZONTAL AIMING.

Figure 5-4. REIL Layout.

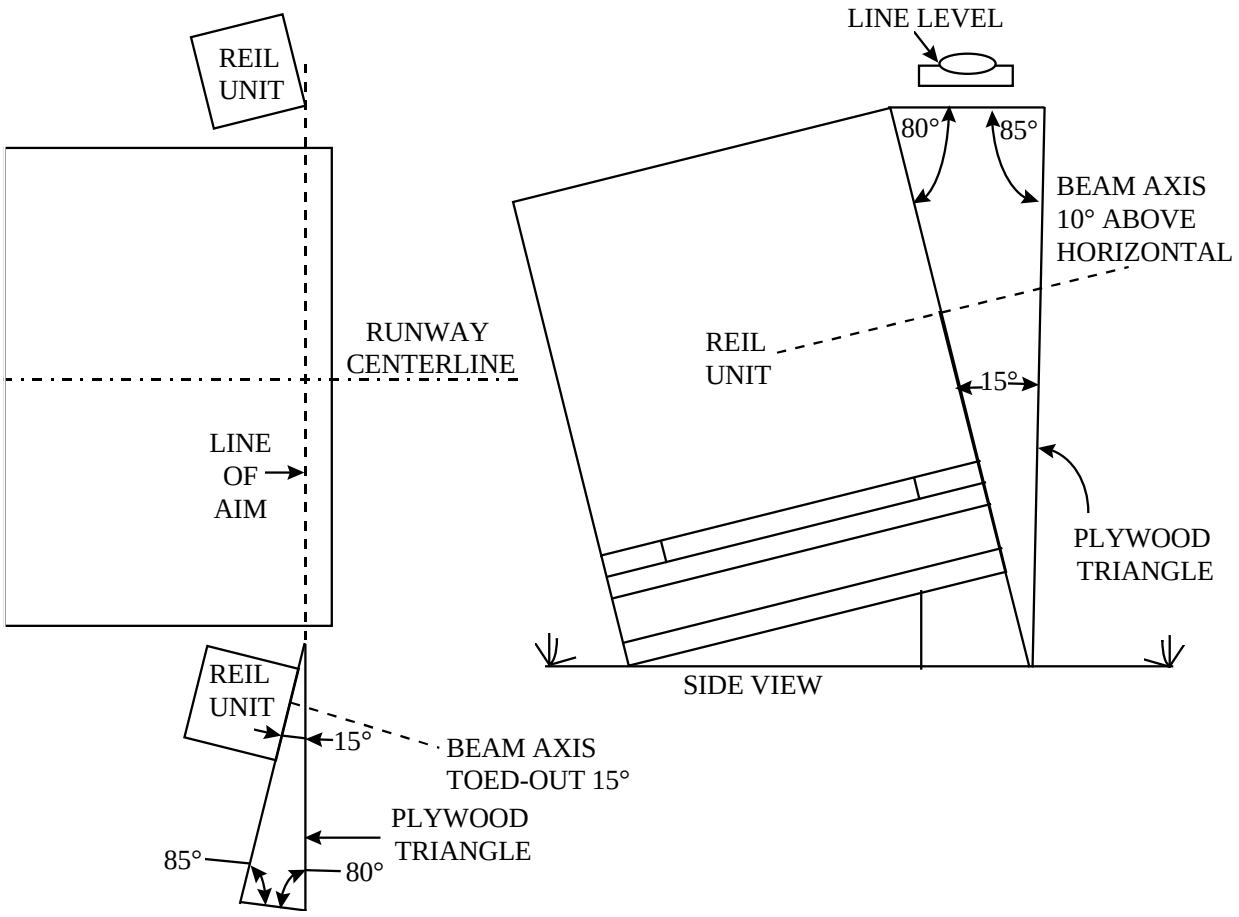

Figure 5-5. REIL Aiming

Maintenance Requirement	DAILY	WKLY	MTHLY	BIMHY	SMANY	ANNLY	UNSCH
1. Check operation of lamps.	X						
2. Check the operation of controls.				X			
3. Check cleanliness of optical system.				X			
4. Check for mechanical damage or misaligned parts.				X			
5. Check operation of interlocks.				X			
6. Check for vegetation around lights.				X			
7. Check cabinets for cleanliness and moisture.					X		
8. Check electrical connections.					X		
9. Check alignment and elevation of unidirectional REIL. Check only elevation of omnidirectional units.					X		
10. Realign unidirectional REILs, as required.					X		
11. Check baffles on REIL (if used).					X		
12. Check power distribution equipment.						X	
13 Check insulation resistance of cable.						X	
14. Check resistance of grounding systems.						X	
15. Service timer motor and contacts (if used).						X	
16. Check need for painting.						X	

Table 5-12. Preventive Maintenance Schedule for REIL (Runway End Identifier Lights)

5.10 MEDIUM APPROACH LIGHTING SYSTEM (MALS, MALSF, MALSR).

5.10.1 Preventive Maintenance Inspection Procedures.

A typical layout of the MALSR System is shown in Figure 5-6. To perform PMIs contained in Table 5-13, proceed as follows:

5.10.1.1 Daily Check.

1. Check and record burned-out lamps.

5.10.1.2 Weekly Checks.

1. Request tower personnel to turn on the system and cycle through each brightness step from the remote control panel. If the system is equipped with air-to-ground radio control, check each brightness step for proper operation. During the sequence, the maintenance technician should be in a position to observe the system operation.

2. Replace burned-out lamps as necessary to meet the criteria in Appendix A, Table 2.

3. Check the exterior optical surface of all lights. Clean as required.

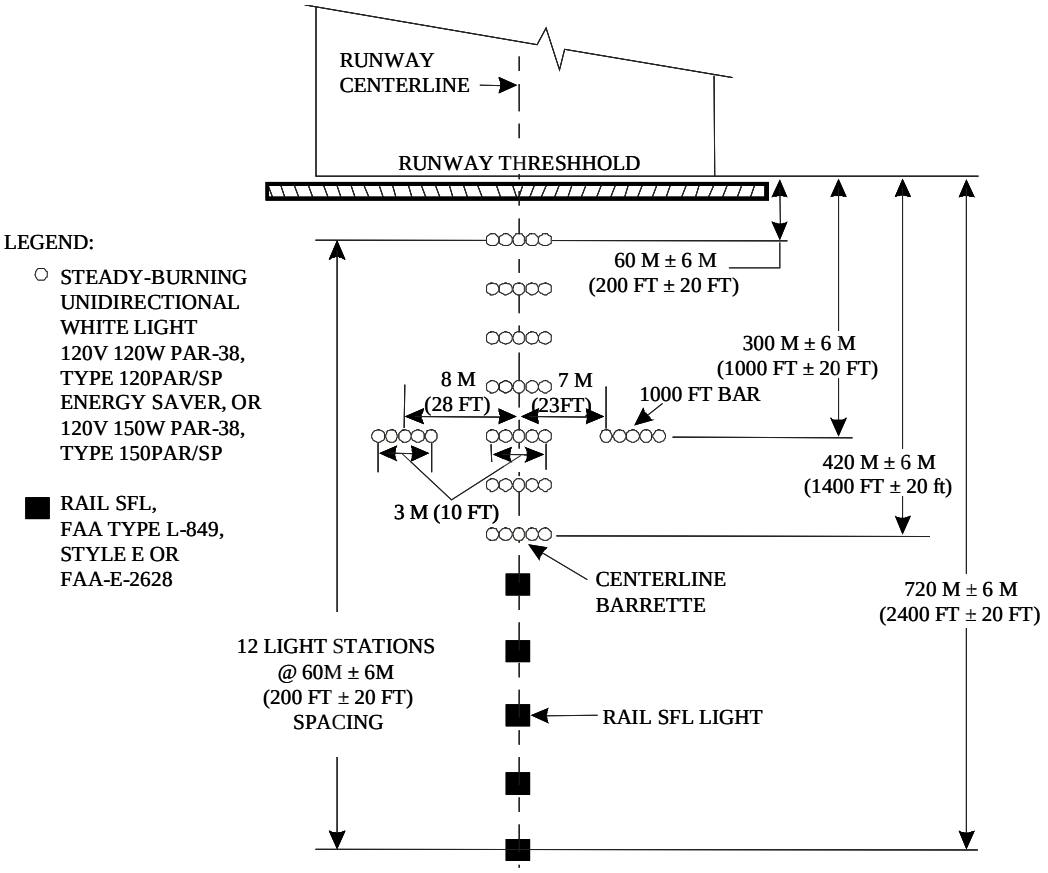

Figure 5-6. MALSR Configuration

Maintenance Requirement	DAILY	MKLY	MTHLY	BIMHY	SMANY	ANNLY	UNSCH
1 Check for burned-out lamps.	X						
2. Check system operation.		X					
3. Replace burned-out lamps.		X					
4. Check in pavement lights for cleanliness.		X					
5. Record input and output voltages of control cabinet.			X				
6. Clear any vegetation obstructing the lights.			X				
7. Check angle of elevation of lights.					X		
8. Check structures for integrity.					X		
9. Check approach area for new obstructions.					X		
10. Check photoelectric controls (if used).					X		
11. Check electrical distribution equipment.						X	
12. Check insulation resistance of cable.						X	
13. Check fuse holders, breakers, and contacts.						X	

Table 5-13. Preventive Maintenance Schedule for MALSR (Medium Intensity Approach Light System with Runway Alignment Lights)

5.10.1.3 Monthly Checks.

1. Record the input and output voltages of the control cabinet and compare with previous readings to ascertain the rate of deterioration of the system.

2. Clear vegetation or obstructions from the front of all lights to ensure adequate visibility. Approved chemicals can be used to help control the growth of vegetation around the lights.

5.10.1.4 Semi-annual Checks.

1. Check light fixtures for alignment. The elevation angle settings of the lamps differ at each light bar station. These angles should be permanently displayed at each station to facilitate maintenance.

2. Check structures carefully for hidden corrosion. Special attention should be paid to wood-to-wood, wood-to-steel, wood-to-earth, and steel-to-earth contacts.

3. Check the approach area for new structures or for growth of vegetation which may violate the approach clearance criteria. A clear line-of-sight is required from any point on a plane 1/2 degree below the glide slope extending 250 feet (75 m) from each side of centerline for a distance up to 1,600 feet (500 m) in advance of the outermost lights in the system. If objects block a view of the lights and cannot be removed, refer the problem to appropriate airport authorities.

4. If used, check and adjust the photoelectric controls. Use a photometer to verify the photoelectric control is adjusted to turn the lights on at a North sky light intensity level of 35 footcandles and turn off at 58 footcandles. If the unit is properly adjusted, the system will operate on the high brightness position on a relatively clear day from approximately 1/2 hour before sunset to 1/2 hour after sunrise. Also, check the orientation of the photoelectric cell. The cell should be oriented by aiming at the North sky at or slightly above the northern horizon. If adjustments are required, refer to the applicable manufacturer's instruction book for detailed adjustment procedures.

5.10.1.5 Annual Checks.

1. Check pole-top-mounted or termination switches.

2. Check all main power and control cable insulation resistance. Record reading on the insulation resistance form. Compare the current reading with previous readings to determine if cables are deteriorating.

3. Check fuse holders, breakers, and contacts. Contacts in the control cabinet should be carefully inspected. If the contacts are badly worn, they should be replaced. Do not file or burnish contacts. Discoloration of contacts or some roughness due to normal arcing is not harmful. The contacts should be wiped to remove the dust. Blown fuses should be replaced with the correct size and type. Do not assume that the old fuse is the correct size and type.

5.10.1.6 Unscheduled Maintenance.

Consideration should be given to group changing of all PAR 38, 150-watt lamps after 1800 hours of operation on maximum brightness, recorded on an elapsed time meter.

5.11 HAZARD BEACONS AND OBSTRUCTION LIGHTS.

5.11.1 Preventive Maintenance Inspection Procedures.

To perform the PMIs contained in Table 5-14, proceed as follows:

5.11.2 Daily Checks.

Verify that all hazard beacons and obstruction lights are burning each night. Replace burned-out lamps.

5.11.3 Monthly Checks.

1. For flashing hazard beacons, count the number of flashes of the hazard beacon over a full 2-minute period. The flashing rate may range from 20 to 40 per minute; the beacon "OFF" time should be about half the "ON" time.

2. Check the operation of the photocell or other automatic control devices.

5.11.4 Semi-annual Checks.

Test the insulation resistance of feeder cables and ground resistance of the grounding system.

5.11.5 Annual Checks.

1. Check the condition of the wire, insulation, splices, switches, connections, and fuses. Check the fuse size (should not be more than 120 percent of rated load). The fuse holder should be tight with clean, uncorroded contacts. Check the wiring for loose connections and the insulation for breaks or fraying. Check switches for loose, burned, or misaligned contacts.

2. Check the lamp voltage at the lamp socket and record the voltage. Compare the voltage with the previous reading. If the voltage reading is more than 10 percent different from the nominal value, determine the cause and correct the problem. If a booster transformer is used, check the input and output voltage levels.

3. Check gaskets and seals for leaks. Adequate weatherproofing is necessary for the protection of lights. All gaskets should be renewed when cracked or deteriorated. Before installing a new gasket, thoroughly clean the gasket channel to make the gasket seat properly. When it is necessary to secure the gasket with rubber cement, coat both gasket and seal with cement and permit to dry until tacky before the gasket is placed in position.

4. Visually check the lightning-protection system. Check all connections for tightness and continuity. Check lightning arresters for cracked or broken porcelain and for missing mounting brackets. Repair as required.

5. Check the power company meter. The meter should be checked for creeping under no-load conditions. If it is creeping with the light off, carefully check for grounds. If none are found, notify the power company to correct the problem. Check the leads for tightness and keep the meter surface clean.

6. When the obstruction lights are mounted on disconnect hangers and are equipped with lowering devices, wire guides, and pulleys, all fittings, supports, and cables should be cleaned and lubricated. The contact surfaces of the electrical disconnect should be cleaned.

7. The duplex obstruction lights should be serviced as described above. In addition, if a changeover relay is used, it should be cleaned and the relay housing gasket should be kept in good condition. Replace all missing cover screws to prevent water, moisture, and dust from entering the relay enclosure. Only one light in the double obstruction light is energized when a transfer relay is used. Upon failure of the first lamp, the relay should transfer power to the second or standby lamp. The relay is mounted in the fixture base. A pilot lamp is normally provided across the standby lamp to provide a remote indication that one lamp has burned out. Check the operation of this remote lamp.

8. The beacon should be cleaned and reconditioned yearly or when a lamp is replaced. Follow the procedures below:

(a) Clean and polish the globes and lenses using a glass cleaner or ammonia and water. Wipe the globes dry before reassembling. Remove dust and dirt from grooves. A stenciling brush or a small paint brush is especially useful for this purpose. Remove all paint spots and streaks from along the edge of glass.

(b) Using a brush or cloth, clean the dirt and dust from fixture and open all drain holes. Check the condition of sockets. Look for burned or galled screw bases, loose connections, and frayed or broken insulation.

(c) Check the load contactor for pitted, burned, or misaligned contacts. Ensure that the armature moves freely and that the spring tension is sufficient to pull the armature away from the coil when de-energized.

5.11.6 Unscheduled Maintenance.

Change the lamp when the burning time has attained 80 percent and not more than 95 percent of its rated life. Make certain that the correct lamp is installed. Allow the new lamp to burn for a few minutes to make certain that the lamp is not defective.

Maintenance Requirement	DAILY	WKLY	MTHLY	BIMHY	SMANY	ANNLY	UNSCH
1. Check operation of lamps.	X						
2. Check flash rate of hazard beacons.			X				
3. Check operation of photocell.			X				
4. Check insulation resistance and ground resistance.					X		
5. Check wire and connections.						X	
6. Check voltage at lamp socket.						X	
7. Check weatherproofing of the fixture.						X	
8. Check lightning protection system.						X	
9. Check power meter.							
10. Service lowering device and other supporting hardware.						X	
11. Check changeover relay in dual fixture.						X	
12. Clean and recondition beacon.						X	
13. Install new lamp after 80 percent of rated life.							X

Table 5-14. Preventive Maintenance Inspection Schedule for Hazard Beacons and Obstruction Lights

5.12 AIRPORT LIGHTING CONTROL AND MONITORING SYSTEMS (ALCMS).

5.12.1 Maintenance.

While the maintenance of computer based control and monitoring systems is beyond the scope of this document, there are certain basic provisions of the control system that may be addressed, particularly at the time of installation. These provisions will make the task of maintaining these systems ultimately easier for the maintenance staff.

5.12.2 Maintenance Training.

When installing a new system, the control system designer should specify the amount and length of training classes required for the electrical maintenance and other airport personnel (i.e. Operations). All persons who may be called upon to troubleshoot or maintain the system should be properly trained. The training material should be reviewed at a minimum once per year. Training classes for maintenance personnel should be limited to a maximum of 4-6 people per class in order to insure hands-on training. The key to successful training is the availability of well-

written comprehensive manuals from the manufacturer that assume that maintenance personnel do not retain a day-to-day knowledge of key maintenance procedures. Today's control systems are fairly maintenance-free and the maintenance person does not get to use his or her expertise on a daily basis. The maintenance manual and training should, at a minimum, include the following subjects.

a. System block diagram – Theory of Operation
b. System drawing package - System assemblies and wiring diagrams
c. Touch screen operation
d. Maintenance of HMI interface
e. Overall system maintenance
f. Hands-on troubleshooting
g. Procedure in transferring control from Air Traffic Controllers (ATC) to maintenance personnel and return to ATC.
h. Control system power-up and power-down sequences
i. Failsafe scenarios and what to do during failsafe operation
j. System reporting capabilities
k. Control and monitoring capabilities

5.12.3 Technical Support.

It is very important that the airport maintenance people have adequate technical support from the system manufacturer. This support is not just needed during the warranty period but for the years after that. It is in the best interest of the airport to always have back-up support available. This support should include the following:

a. Technical phone assistance
b. Technical support telephone line available 7 days a week, 24 hours a day, 365 days a year
c. On-site technical field service as required

5.12.4 Maintenance Manuals.

The ALCMS manufacturer shall have supplied the necessary copies of the operation and maintenance manuals that are hard-covered and suitable for the daily operation and maintenance of the system. The manuals should include operational overview, system theory of operation, and graphical user interface screen operation

5.12.5 FAA ATC Manuals.

The airport should possess the ALCMS manufacturer's operation manuals for the Air Traffic Controllers (ATC) that are hard-covered and suitable for daily operation of the system. At a minimum, the manuals shall include Touch screen operation (human machine interface) and Touch screen maintenance (i.e. calibration).

5.12.6 As-Installed Drawing Package.

The airport should possess a complete set of As-Installed drawings from the ALCMS manufacturer. The As-Installed drawings should reflect the final installation design of the ALCMS including System Block Diagram (1-line drawings), System External Wiring Diagrams, Assembly Drawings, and Assembly Wiring Diagrams.

5.13 STANDBY AND EMERGENCY POWER SYSTEMS.

5.13.1 General Engine Maintenance Notes.

The following are some general and miscellaneous maintenance inspections for emergency generator systems.

5.13.2 Engine and Generator Mounts.

Check engine and generator mounting bolts and the condition of the mounting pads every 1000 hours or annually (whichever comes first) and tighten or repair as required.

5.13.3 Load Test.

Start and exercise the generator set under load on a monthly basis (per NFPA recommendations). When exercising the generator set, load should be at least 35% of nameplate rating. Operate the generator at that load or higher until coolant temperature becomes stable. This will evaporate any moisture that may have condensed in the crankcase and prevent wet-stacking. Load test all standby generators at 100% rated load for 4 hours once each year to eliminate carbon buildup in the cylinders and as a means of indicating any potential problems with the unit. If the airport does not possess load bank equipment suitable for performing this test, contact the local supplier of the generator equipment to supply the load testing service.

5.13.4 Cooling System.

Change coolant system antifreeze annually; however, coolant with manufacturer recommended supplemental inhibitors may be operated up to two years or 4000 hours, whichever comes first.

Inspect coolant system hoses at least every 500-600 hours for signs of deterioration and replace if necessary.

Inspect the water pump drain hole for plugging every 500-600 hours and clean out if necessary.

Replace the bearings in the fan hub assembly with new bearings at major engine overhaul.

Check drive belts daily for prime power applications and monthly for standby applications. Adjust as required. At this time, inspect belts for splits, cracks, and glazing and replace as required.

5.13.5 Turbocharger, Exhaust Connections.

Visually inspect the mountings, intake and exhaust ducting, and connections for leaks daily. Check the oil inlet and outlet lines for leaks or restrictions to oil flow. Check for unusual noise or vibration and, if excessive, stop the engine and do not operate until the cause is determined.

Check the exhaust manifold retaining nuts, exhaust flange clamp, and other manifold connections for leakage and tighten, if necessary. Check heat-insulating exhaust system, turbo-charger, and turbocharger riser blankets for damage daily. Replace torn, matted, crushed, oil-soaked, or otherwise damaged insulation blankets immediately.

5.13.6 Battery.

Check the hydrometer “eye” of maintenance-free batteries for charge. If lead-acid or low maintenance batteries are used, check the specific gravity of each cell every 150 hours. This check may also be made each time a weekly inspection is made prior to starting the generator. Check more frequently in warm weather due to more rapid loss of water through evaporation. Maintain the electrolyte level according to the battery manufacturer’s recommendations, but do not overfill. Overfilling can cause poor performance or early failure. Keep the terminal side of the battery clean. When necessary, wash with a solution of baking soda and water. Rinse with fresh water. Do not allow the soda solution to enter the cells. Inspect the cables, clamps, and hold-down brackets regularly. Clean and re-apply a light coating of petroleum jelly when needed. Replace corroded or damaged parts. Keep batteries fully charged. Replace any battery that fails to hold a charge. By checking each battery cell with a hydrometer, a weak cell can be detected and the battery replaced before a failure occurs. Periodically check battery connections for corrosion and tightness. If necessary, remove connections and wire brush corrosion from terminals and cable ends. Replace damaged wiring. Replace batteries every two years to assure proper operation.

5.13.7 Air Cleaners.

A clogged air cleaner element will cause excessive intake restriction and a reduced air supply to the engine. This in turn can result in high operating temperatures, increased fuel consumption, inefficient engine operation, and engine malfunction or damage. Replace dry type air cleaner elements, if used, with new elements after one year of service. Inspect the entire air system for leaks. Look especially for air inlet piping or boots that are loose and for loose or damaged clamps.

5.13.8 Lubricating Oil and Filters.

Check the oil level weekly for standby or daily for prime power generator sets, with the engine stopped. If necessary, add sufficient oil to raise the level to the proper mark on the dipstick. All diesel engines are designed to use some oil, so the periodic addition of oil is normal. Lubricating oil filters should be changed whenever the engine oil is changed, normally a minimum of once a year or every 150 hours of operation for standby units. Under normal operation, note oil pressure each time the engine is started as well as during load test.

5.13.9 Fuel Lines, Flexible Hoses.

Check hoses as part of the pre-start inspection. Examine hoses for leaks, and check all fittings, clamps, and ties carefully. Make sure that hoses are not resting on or touching shafts, coupling, heated surfaces including exhaust manifolds, any sharp edges, or other obviously hazardous areas. Since all machinery vibrates and moves to a certain extent, clamps and ties can fatigue with age. To ensure continued proper support, inspect fasteners frequently and tighten or replace them as required. Examine leaks immediately to determine if fittings have loosened or cracked or if hoses have ruptured or worn through. Take corrective action immediately. Hoses have a finite service life. With this in mind, thoroughly inspect all hoses at least every 500 operating hours and/or annually. Look for cover damage and/or indications of twisted, worn, crimped, brittle, cracked, or leaking lines. Hoses with their outer cover worn through or with damaged metal reinforcement should be considered unfit for further service.

5.13.10 Electrical Generator Maintenance Notes.

Dirt, heat, moisture, and vibration are common enemies of a generator. Keeping the generator clean and dry, maintaining proper alignment of the generator and its prime mover, and preventing overloads will result in efficient operation and long life. Protect generators that are outdoors from the elements by suitable houses or enclosures. Dirt and dust will conduct electricity between points of different electrical potential. Moisture will aggravate the problem further. Insulation system failure can result if corrective action is not taken. The condition of the insulation system can be tested by measuring the insulation resistance. Accumulations of dust and dirt not only contribute to insulation breakdown, but they can also increase temperature by restricting ventilation and by blocking the dissipation of heat. It should also be noted that the presence of rodents such as mice around the generator enclosure can be a cause for premature failure. Mice have been known to enter the generator housing through a missing or damaged screen and chew through windings causing a short circuit and failure.

5.13.11 Preventive Maintenance Inspection Procedures.

5.13.11.1 Weekly Checks.

1. Before starting the engine, check the following:
    - Battery water level.
    - Specific gravity of battery electrolyte (check all battery cells)
    - Immersion heater operation
    - Engine oil level.
    - Governor oil level if equipped with hydraulic/mechanical governor.
    - Engine generator coolant level.
    - Fuel level in main storage tank.

- Battery trickle-charge current

NOTE: *If necessary to add oil, water, or fuel, record amount. Do not operate diesel engines without load as it results in fouling the cylinders and injectors.*

2. Load-test the engine generator for 1 hour. Turn on the airport lights and visual aids before beginning the test. Load on generator should be at least 35% of generator rated load.

(a) Start the generator by one of the two methods below. Alternate the method of starting the generator on successive load tests.

(1) Start the generator by using the remote control in the tower or other remote location. If there is no remote control, use the controls in the vault located on the emergency transfer switch.

(2) Start the engine by simulating a power failure. This may be done by switching off incoming commercial power. This procedure should be used only after coordination with the tower, flight service station, or other authority in charge of air traffic control.

(a) Record the time for engine generator to start and transfer switch to operate.

(b) Check for normal operation of controls.

(c) Take a reading of the following after engine generator has operated for 15 minutes under load:

Output voltage Phase: 1_____ 2 _____ 3 _____
Output current Phase: 1 _____ 2 _____ 3 _____
Output frequency _____
Engine oil pressure _____
Coolant temperature _____

(d) Check room ventilation louvers for freedom of operation and manual and automatic operation of fan.

(e) For starting method (1), reset control switch from "run" to "automatic." After the set time delay, normally 15 minutes, the transfer switch should operate and transfer the load back to commercial power. Check time for load transfer and check time for engine to shut down after programmed engine "cool down" cycle, normally 5 minutes.

(f) For starting method (2), turn the commercial power back on, and measure the delay from the resumption of commercial power until transfer of load to commercial power. Then measure the delay from load transfer until shutoff of the engine.

(3) Clean the engine generator set, its accessories, control compartments, and do necessary housekeeping of the immediate area.

5.13.11.2 Quarterly Checks and Annual Checks.

1. Perform checks and record readings same as those noted on weekly checks.

2. In addition to the weekly checks, perform the checks listed in Table 5-15.

5.13.11.3 Bi-annual Checks.

1. Perform all checks covered in Table 5-15.

2. Drain and flush engine-cooling system after operating the engine under load for 1 hour.

3. Remove covers and inspect generator bearings for wear and condition of lubrication.

4. Replace batteries.

Engine – Lubricating System	Quarterly	Annually
1. Check for leaks	X	X
2. Check engine oil level and pressure	X	X
3. Check hydraulic/mechanical governor oil level	X	X
4. Change engine oil and filters every 150 hours of operation or		X
5. Change hydraulic/mechanical governor oil		X
Engine – Cooling System		
1. Check for leaks	X	X
2. Check radiator for air restriction	X	X
3. Check operation of coolant heater	X	X
4. Check hoses and connections	X	X
5. Check coolant level and temperature	X	X
6. Check belt condition and tension	X	X
7. Check heat exchanger corrosive water treatment plugs (if equipped)	X	X
8. Check motor operated louvers	X	X
9. Check radiator duct work and fan shroud	X	X
10. Check antifreeze and additive concentration		X
11. Check fan hub, drive pulley & water pump		X
12. Change coolant filter (if equipped)		X
13. Check thermostat and radiator cap		X
Engine – Air Intake System		
1. Check for leaks	X	X
2. Check air cleaner restriction	X	X
3. Check all piping connections	X	X
4. Clean air cleaner element and housing	X	
5. Change air filter element		X
6. Clean crankcase breather element		X
Engine – Fuel System		
1. Check for leaks	X	X
2. Check governor control linkage	X	X
3. Check fuel lines & connections	X	X
4. Drain sediment from day tank	X	X
5. Drain water separators	X	X
6. Check day tank fuel level		X
7. Check fuel transfer pump		X
8. Check diesel engine primer pump		X
9. Change fuel filters		X
10. Change day tank supply filter (or clean)		X
11. Change water separator filter (if equipped)		X
12. Check float tank breather element (if equipped)		X
13. Check fuel tanks for contamination		X

Table 5-15. Quarterly and Annual Preventive Maintenance Checklist for Standby Generator Sets

Engine – Exhaust System	Quarterly	Annually
1. Check for leaks	X	X
2. Check exhaust restriction	X	X
3. Drain exhaust condensation trap (if equipped)	X	X
4. Torque exhaust manifold & turbocharger cap screws		X
5. Torque exhaust flange bolts		X
Electrical System		
1. Check battery – charging system	X	X
2. Check battery – electrolyte level	X	X
3. Check engine safety controls, alarms and wiring	X	X
4. Check battery connections and terminals	X	X
5. Check engine starting motor cranking current		X
Engine Related Systems		
1. Check for vibration & metal cracks	X	X
2. Check engine mounting hardware and tighten		X
3. Check fuel injector pump & injector timing		X
4. Check engine for dirt/debris and clean vent screens		X
5. Grease fan pillow block bearing (if equipped)		X
Main Generator		
1. Check air inlet & outlet restrictions	X	X
2. Grease generator bearing (if equipped)		X
3. Clean generator per manufacturer's instructions		X
4. Perform 4 hour full load test		X
Switchgear		
1. Check operation of transfer switch and timing relays	X	X
2. Inspect transfer switch contacts for pitting or arcing	X	X

Table 5-15. Quarterly and Annual Preventive Maintenance Checklist (continued)

CHAPTER 6. TROUBLESHOOTING PROCEDURES FOR SERIES LIGHTING CIRCUITS.

6.0 INITIAL FAULT INVESTIGATION.

SAFETY:

a. Troubleshooting tests contained in this chapter may involve voltages that are dangerous. Safety precautions must be exercised for the protection of personnel and property (see Paragraph 2.3, Electrical Hazards of Series Lighting Circuits).

b. Personnel performing the testing and troubleshooting procedures must be experienced in high-voltage techniques and must be adequately supervised. All maintenance personnel should be thoroughly trained in emergency procedures for treatment of electrical shock.

Series circuits are subject to two primary types of malfunctions, shorts to ground or opens. Keep in mind that an airfield lighting series circuit powered by a constant current regulator is an ungrounded circuit. Therefore, the circuit and CCR will function normally with one ground on the circuit. It is only when two or more grounds appear and a "short circuit" path is created that the current begins to flow through the earth, around the lighting load, and a section of lights appears out. In the case of an open in the primary field circuit, no current can flow and the entire circuit goes out.

Constant current regulators larger than 10kW are required to have open circuit protection that will shut the CCR down within two seconds after current flow has been interrupted. Most manufacturers, however, provide this protection on all their CCRs. When in doubt, check your CCR's operating manual. Open circuits can exist in conjunction with grounds and if the CCR can develop enough voltage to overcome whatever resistance exists in the circuit, it will establish current flow and continue operating.

In most instances, we learn of a malfunctioning lighting circuit from a report made by the control tower or through an operations report. Sometimes it is noticed by an electrician making a routine daily runway inspection or light check. Either way, the complaint may consist of a section of lights out or an entire circuit not functioning. The first step in an initial fault investigation is to make a quick visual inspection of the affected lighting on the airfield. This will provide information as to whether an entire circuit is out or just a portion of the lighting on a specific circuit is affected. This gives an electrician a good idea as to the possible cause of the malfunction. If an entire circuit is out, the problem could be an open circuit in the field wiring or a malfunctioning CCR. If only a portion of the lights on a circuit is out, the problem is most likely due to a short to ground at each end of the affected section. Keep in mind that if the malfunction is due to a short to ground in the field circuit, the longer the circuit remains energized, the more damage will result at the location of the ground faults due to arcing.

In the vault, once the exact malfunctioning circuit has been determined, the regulator supplying the circuit can be located. Turn the regulator local control to the "OFF" position and shut down and lock out the power supply to the regulator. If a standard Style S1 cutout is present, disconnect the S1 and separate the blades of the cutout switch on the field side of the switch. This will allow you to check both the continuity and insulation resistance in the field circuit. After separating the ends of the field circuit by either separating the blades of the S1 or disconnecting at least one end of the field circuit from the regulator, prepare to take a measurement for continuity in the circuit.

If using a volt-ohm-meter (VOM), the first step is to set the meter to the R x 1 scale and "zero" the meter (if using a digital multimeter, these steps are not necessary). This is accomplished by setting the meter to the desired scale (R x 1 in this case) and touching the two meter leads together. Make sure the leads are plugged into the correct sockets in the meter (on most VOMs, this is the + and common sockets) and adjust the "zero ohms" knob until the meter needle is at the zero point (usually on the right side of the meter scale). After this adjustment has been made, take a reading of the resistance in the field circuit by checking between the two separated conductors of the field

circuit. If no continuity can be read in the circuit, check for a short to ground in each side of the circuit and then proceed to Section 6.2, "Locating Open Circuit Faults." If the circuit shows continuity (a measurable amount of resistance) normally between 20 to 70 ohms, the circuit is not open. If a much higher resistance is measured (1000 ohms +), then a high resistance open circuit fault has occurred. Many times this is indicative of a transformer with a faulty primary winding that has not completely burned open yet. It could also be due to a cut cable which has both ends in contact with the earth.

If the resistance in the circuit checks normal, proceed to check the resistance to ground from each end of the circuit to ground. If any resistance can be read to ground with the meter set at R x 1, then one or more low resistance shorts to ground exist and troubleshooting procedures are moved to the field (see Section 6.1). If the meter reads no continuity (no meter movement) when the circuit is checked to ground, set the meter for the R x 100 and R x 10,000 scales respectively and, after zeroing the meter, check for a short to ground on these two scales. Remember that the positive (red) lead should always be connected to the circuit or conductor under test and the negative (black) lead should be connected to ground. Also be aware that on the R x 10,000 scale, merely touching the meter leads with your fingers will produce a reading. Most ground faults serious enough to cause the lights to go out will be reading less than 1000 ohms to ground, usually less than 100 ohms to ground and will be easily indicated on the R x 1 scale. If no ground fault is detected on the circuit with the VOM or DMM, use an insulation resistance tester to test the circuit. Insulation resistance testers operate at much higher voltages, 500 to 5000 volts, and are more useful in locating a high resistance ground fault.

If no problems are detected in the field circuit, the next step is to try to energize the CCR using the manual control on the front of the CCR. After reconnecting the field circuit to the CCR, or reinstalling the S1 and turning the primary power back on to the regulator, begin by putting the switch in the step 1 position and note if the CCR comes on. If it does not, the problem may be as simple as a tripped breaker or blown fuse and you should proceed to check for proper input voltage to the CCR. If the CCR energizes for about 2 seconds and then shuts off, the fault is likely a malfunction of the open circuit or over current protection circuitry in the CCR. If the field circuit appears normal, disconnect and lock out the primary power source to the CCR and perform a short circuit test by shorting the output of the regulator with a #10 or larger wire, and test the operation of the regulator again. If the regulator still shuts off after a few seconds, there is an internal problem with the regulator or its controls. Consult the operation and maintenance manual for the CCR for specific troubleshooting instructions.

If the CCR remains on and appears to be operating normally on the lowest brightness setting, continue switching the CCR up through the brightness steps while noting the increase in current output on the meter until the maximum brightness is reached, either step 3 or step 5 depending on the style of the regulator. If the regulator has a normal output on the lower steps, but the output is low on the highest step, the regulator may be overloaded or there may be too much inductance in the field circuit. Perform a short circuit test of the regulator by turning the regulator off and disconnecting and locking out the primary power to the regulator. Then connect a #10 wire across the output and re-energize the regulator. If the regulator operates normally with the output shorted, this would indicate an overload is present in the field circuit. If there have been no additional loads added to the field circuit, check for burnt out lamps or otherwise open secondary connections on the field transformers. Newer regulators are required to withstand up to 30% open-circuited isolation transformers. Older regulators may only tolerate 10%. When a large number of open-circuited transformers exist on the output of a regulator, it increases the inductive loading on the regulator and will cause the regulator to act strangely and many times appear overloaded. One cause of this condition may be a lightning strike that has blown out a large number of lamps in the circuit.

6.1 LOCATING GROUND FAULTS IN THE FIELD.

Once it has been established that the circuit is shorted to ground, the troubleshooting procedures can be moved to the field. Keep in mind that if there is a section of lights out on the circuit, there will ALWAYS be at least two shorts or ground faults in the circuit. At this time the circuit may be energized and a visual inspection can be made to try to locate the faults. If the circuit is a simple loop configuration, a visual inspection can sometimes be an effective means to find the problem. It is best to have someone at the vault with a radio so that as soon as the good to bad transition areas in the circuit are located, word can be sent to the vault to shut off the regulator and lock it out so that repairs can be made. Drive the circuit looking for any section of lights that are out or appear to be extremely

dim and mark this area by putting a surveyor's flag or a paint mark at the locations of the last light burning and the first light out as shown in Figure 6-2. After the circuit has been de-energized and locked-out, check the lights at each end of these "transition areas" for burned transformers, connectors, etc. Always remember that there will be at least two shorts in the circuit and both must be repaired. In some instances, especially in the case of direct buried cables or when the circuit has been energized for a long period of time while ground faults are present, more than two shorts to ground may have occurred.

The best method for finding ground faults after the initial visual inspection has been made is to locate them using the VOM. Leave the ends of the circuit separated at the vault and suspend the ends of the cables in free air if disconnected from the S1 or other connection. Refer to as-built plans if available to locate the center of the circuit and break the circuit at that point by disconnecting the cable at one side of the transformer. (See Figures 6-3a & 6-3b). Take a reading to ground in both directions from this point and determine which way the fault is located. It is entirely possible that the meter may indicate a fault in both directions from this point or only in one direction as there may be two or more faults in the same section of cable. Leaving this connection open (if possible), proceed to a point in the circuit approximately halfway between the midpoint and the vault in the direction of the fault and break the circuit again. As before, take a reading on the circuit in each direction to determine the location of the fault. Continue until each fault is located and corrected.

During the course of troubleshooting, you may find that when you remove a transformer from the can or the ground that the fault seems to disappear. When this happens the fault is located at that transformer; normally you can visually see the burned transformer. However, in the case of an internal primary to secondary short in the transformer, there may not be anything readily apparent. Look at the fixture attached to the transformer and check to see if the socket or secondary plug is burned. This is usually a good sign of a primary to secondary short. A short of this nature can be confirmed by touching one lead of the VOM to one of the primary leads of the transformer and touching the other to one of the sockets on the secondary connector. If the transformer is shorted, continuity will be indicated on the meter. Sometimes checking between one of the primary connectors and the outside body of the transformer will indicate a transformer with a significant leak to ground. This can be performed with an insulation resistance tester for better results. If checking the insulation integrity of transformers, you can also submerge the transformer in a bucket of water and connect the positive lead of the Megger to one of the primary leads and the negative lead to a bare wire dropped into the bucket. If any leakage is shown, the transformer is suspect or bad depending on the reading. Reasonably new transformers should read over 1000 megohms, with readings decreasing with age.

6.2 LOCATING OPEN CIRCUIT FAULTS.

Open circuits can be successfully located using similar tactics as those used for locating short circuits or ground faults. If the circuit appears to be grounded in conjunction with an open, the troubleshooting procedure used for finding ground faults may be used since the open and ground will likely be located at the same place. Many times a cable will burn in two if left operating after a short to ground has developed. If the initial fault investigation has revealed an open in the field circuit and the circuit does not appear to be grounded, de-energize the regulator and lock out the regulator power supply and proceed to the field and locate the approximate center of the circuit.

Tip: Any time an open circuit is indicated, the first question to ask is: "Has anyone been doing any excavating in the vicinity of the airfield?" If so, go out and look for a pile of fresh dirt and you will likely find your problem.

For this type of troubleshooting where you are looking for continuity, it is helpful to have the ends of the circuit connected together at the vault via the S1 cutout or some other means --- see Figure 6-5. That way, when the problem is corrected, it can be verified by being able to read a loop from any point in the circuit. Proceed to the approximate midpoint of the circuit and disconnect the circuit at the transformer and ground the circuit in both directions. Check for continuity to ground at another point in the circuit by disconnecting the transformer. If the circuit is connected together at the vault and you have only one open in the circuit, you should read continuity in one direction but not the other back to the grounded midpoint of the circuit. When the grounded conductor is identified, have someone at the midpoint connection make and break the connection to ground in one direction and then the other until you have established which section of the circuit is open. Then proceed to a point halfway

between your present location and the grounded midpoint in the section of the cable that is open and take another reading. If this time you can read to ground in the direction of the midpoint of the circuit, then you know that the open is behind you or between you and the last point you tested. By moving the intentional ground point and looking for continuity in each section of the circuit, the open(s) can be quickly located. See Figure 6-5 for details.

6.3 INTERCONNECTED CIRCUIT FAULTS.

It is common for airfields with multiple circuits to experience interconnecting faults. There are two main types of interconnecting faults. The first occurs when two or more circuits contain grounds and/or opens in a manner that electrically connects the circuits together. The second type occurs when two or more circuits do not contain any faults, but they become capacitively coupled together.

When multiple circuits contain faults that connect them together, a section of primary cable is common to all circuits involved. (See Figures 6-6 & 6-7.) Multiple ground faults are the most common cause of this problem. A continuity check between the suspected circuits will confirm if they are electrically connected. To troubleshoot this condition, disconnect and isolate the output leads of regulator "B," then locate the circuit fault on regulator "A" circuit. This will usually locate the common fault area of both circuits.

A capacitive coupling fault occurs when two or more series circuits run parallel and in close proximity to each other. This situation becomes a problem if the circuits have monitors on them because the induced currents can simulate field faults. A continuity check between the suspect circuits confirms they are not electrically connected together. To correct a capacitive coupling fault, simply swap the output leads of one of the regulators involved. This will cancel the capacitive coupling effect.

!!Warning!!

The troubleshooting methods and procedures outlined in the following paragraphs involve dangerous voltages and should only be attempted by qualified personnel using appropriate safety procedures. Also, while sometimes helpful or necessary, be aware that these methods are by their nature "destructive testing" and if performed indiscriminately can result in more damage occurring in the field circuit.

The following troubleshooting methods are best described as "destructive testing." These methods can be used when either time constraints or difficulty testing using an ohm meter or insulation resistance tester makes traditional troubleshooting impractical. One such instance might be in the case of direct buried circuits where traditional troubleshooting is difficult and time consuming due to having to dig up each connection to perform testing. Another case when this type of troubleshooting might be considered is when a runway circuit is out of service, and time is of the essence due to disrupting air traffic operations at your facility. These methods do require that the circuit have a significantly low resistance to ground at the point of the fault, preferably less than 1000 ohms to ground, the less the better. It should also be noted that small regulators (10kW or less) may not develop sufficient voltage to be effective.

6.4 INTENTIONAL GROUND TEST.

6.4.1 The Intentional Ground Test is another method used to find a single ground fault. (See Figures 6-8a & 6-8b.) If an insulation resistance test indicates a ground in the circuit, but a visual inspection is inconclusive, this test method will help locate the problem.

First, shut off and lock out the regulator. Next, label the two regulator output leads "1" and "2." Connect a 45-watt isolation transformer and light fixture between regulator output "1" and ground as shown in Figure 6-8a. The ground resistance of the test connection must be very small. Next, energize the regulator. Keep away from the test setup. If the test lamp illuminates, there is at least one ground fault on the circuit. The brighter the test lamp glows, the lower the resistance of the ground fault(s). With the regulator energized, conduct a visual inspection of the circuit.

6.4.2 If there is a section of dim or out light fixtures, a ground fault exists between the last light operating properly and the first dim or out light. Mark this area.

6.4.3 If all the lights are dim or out, the ground fault is between output "2" and the first light fixture on that side of the circuit.

6.4.4 If all the lights appear to be OK, the ground fault is between output "1" and the first light fixture on that side of the circuit.

6.4.5 De-energize and lock out the regulator. Switch the test transformer/light assembly from output "1" to output "2" (See Figure 6-8b). Energize the regulator. The test lamp should illuminate. Conduct a visual inspection of the circuit.

6.4.6 If there is a section of dim or out light fixtures, and the location of the "good to bad" lights is in the same spot as marked in Paragraph 6.4.2, the circuit has a single ground fault at that location. (The transition area is the same, but the lights that were on in Paragraph 6.4.2 should now be off, and the lights that were off in Paragraph 6.4.2 should now be on.) De-energize and lock out the regulator. Check the connector kits, cable splices, etc., between the two adjacent light fixtures of the marked area and repair or replace suspected faults as necessary. At this point a VOM or insulation resistance tester may be used to verify faulty transformers, etc. Once the single ground fault is cleared, the test lamp will not illuminate when the regulator is energized. Remember, stay away from the primary cable while the regulator is on.

6.4.7 If there is a section of dim or out light fixtures and the location of the "good to bad" lights is <u>not</u> in the same spot as marked in Paragraph 6.4.2, there are at least two ground faults on the circuit. Mark this new transition area. De-energize and lock out the regulator. Check the connector kits, cable, transformer, etc., between the two adjacent light fixtures of the newly marked area and repair or replace suspected faults as necessary. As each fault is cleared, energize the regulator and perform a visual inspection of the circuit. Keep away from the energized primary cable and always lock out the regulator when handling the cable. The "good to bad" transition area should move toward the spot marked in Paragraph 6.4.2. Continue troubleshooting the faults in this manner until the last ground is repaired and the test lamp does not illuminate when the regulator is energized.

6.4.8 If all the lights appear to be operating correctly, the ground is between output "2" and the first light on that side of the circuit. (The same as found in Paragraph 6.4.3.) De-energize and lock out the regulator. Work from the light fixture towards output "2." Check the cable, connector kits, splices, etc., and repair or replace suspected faults as necessary. The ground fault has been fixed when the test lamp does not illuminate when the regulator is energized.

6.4.9 If all the lights are dim or out, the ground fault is between output "1" and the first light fixture on that side of the circuit (the same as found in Paragraph 6.4.4). De-energize and lock out the regulator. Work from the light fixture towards output "1." Check the cable, connector kits, splices, etc., and repair or replace suspected faults as necessary. The ground fault has been fixed when the light fixtures operate properly and the test lamp does not illuminate when the regulator is energized. Remove the fault marker(s) from the field.

6.4.10 If a Megger is not available, the intentional ground test can be modified to become a valuable preventive maintenance tool. (See Figure 6-9.) Connect the transformer/light assembly to the regulator output through an S-1 cutout, as shown in Figure 6-9. When the S-1 handle is removed, the intentional ground is connected to the circuit. Once a month, shut off the regulator and pull the S-1 handle out. Energize the regulator to the high step and observe the test lamp. If the circuit has developed a ground fault, the lamp will illuminate. The lower the resistance of the fault, the brighter the lamp will glow. The main advantage of performing this check regularly is that a single ground fault can be detected and located easily, before multiple faults affect the visual appearance of the circuit. The general rule of thumb is, if the test lamp glows, the ground needs to be located and repaired. Add this procedure to your preventive maintenance routine and you will always stay one step ahead of grounding troubles.

6.5 GROUNDED OUTPUT TEST FOR LOCATING OPEN CIRCUITS.

6.5.1 The grounded output test is similar to the intentional ground test used to locate ground faults (Paragraph 6.4). In order for this test to work, the open fault needs to be grounded. (See Figure 6-10.) If the open is not grounded or the ground resistance of the fault is too great, this method may only work with large kW rated regulators. Make sure the regulator is off. Refer to Figure 6-10a & b. Mark the regulator leads "1" and "2." Remove lead "1" from the regulator. Cap or tape the bare end of lead "1." Make sure it does not touch anything, and stay away from it when the regulator is energized. Next, connect the regulator output terminal, from which "1" was removed, to earth ground. Once again, the ground resistance of this connection must be as low as possible. Energize the regulator to the highest step. Stay away from the test connection to ground.

6.5.2 If the regulator trips off on open circuit protection, do not attempt to energize the regulator a second time. Either the regulator is too small or the ground resistance of the fault is too large. In most cases, 4 and 7.5 kW regulators do not have enough power to drive a grounded output test that has any ground resistance at the fault location. Ideally, the best regulator to use would be a 30kW for 6.6 amp circuits, and a 70 kW for 20 amp circuits. If possible, connect the circuit to the largest regulator in the vault and try again. If the circuit cannot be turned on, troubleshoot the open fault with the ohm meter/megohm test. (See Paragraph 6.2.)

6.5.3 If the regulator stays on and is registering output current, the open circuit fault can be found using the grounded output test. It is common for the regulator output current to fluctuate with this test set up. This condition will not damage the regulator, but continue to operate the regulator only long enough to locate the fault. Once the fault is cleared, the regulator should return to normal operation. With the regulator energized, conduct a visual inspection of the field circuit. There should be a section of lighted fixtures and a section of out fixtures. Mark the "good to bad" transition area. The open fault will be between the last light fixture operating and the first non-illuminated fixture. If all the lights are on, the open is between output "1" and the first fixture on that side of the circuit. If all the lights are out, the open is between output "2" and the first fixture on that side of the circuit. De-energize and lock out the regulator.

6.5.4 Remove the ground connection from the regulator output terminal. Reconnect lead "1" to the regulator output terminal. Next, remove lead "2" from the regulator. Cap or tape the bare end of lead "2," making sure it does not touch anything and stay away from it when the regulator is energized. Next, connect the regulator output terminal from which "2" was removed, to earth ground. Energize the regulator to the highest step. Stay away from the test connection to ground. Conduct a visual inspection of the field circuit. This time the fixtures that were on in the last test should be out and the fixtures that were out in the last test should be on. The visual appearance of the circuit now should be the exact opposite of Paragraph 6.5.3 with the "good to bad" transition area in the same location. If this is true, the open is between the two light fixtures adjacent to the fault marker. De-energize and lock out the regulator. Start at one light fixture and work toward the other checking isolation transformer windings, connections, splices, and the primary cable for opens. Repair or replace any defects as necessary. To verify the open fault has been corrected, measure the resistance across output "1" and "2" with an ohmmeter. If the resistance is less than 700 ohms, the circuit is free of all opens. Anything over 700 ohms indicates the presence of an open or high resistance fault somewhere on the circuit. Remember, every circuit will have a different resistance value depending on the number and wattage of the light fixtures, but 700 ohms is the maximum for any airfield circuit. Remove the ground connection from the regulator and reconnect output "2" to the regulator. Energize the regulator to the high step for approximately thirty minutes. This will double check that the repair work was done correctly. Perform a visual inspection of the circuit and remove the fault marker(s) from the field.

6.6 USING HEAT SENSING EQUIPMENT TO LOCATE GROUND FAULTS.

Any time there are two shorts to ground in a series circuit, the current flowing to ground through the breach in the cable or transformer insulation produces heat. This is caused by the arcing that occurs when a good solid connection is not present in an electrical circuit. In the case of series circuits operated by constant current regulators, the regulator can produce very high voltages and damage and heat from arcing can be great. Some airports have learned to use this unfortunate circumstance to their advantage. By utilizing economical infrared

thermometers, the electrician is able to measure the difference between the temperatures of a “normal” light can or fixture and one that is running an abnormally high temperature. Infrared thermometers are available that use laser sighting and are effective at distances long enough to allow their use from a moving vehicle. Using this equipment, an electrician can drive down the runway or taxiway checking the temperature of each light/can until one is found that exhibits a higher temperature than the rest and then investigate that light. This method has proven to be a great time saver at several airports. See Chapter 4, Test Equipment, for more information on this equipment.

6.7 USING CABLE FAULT LOCATING EQUIPMENT TO LOCATE GROUND FAULTS.

Cable locating and fault finding technology has improved vastly over the years with many manufacturers offering equipment capable of locating underground cable and ground or shield faults. These units consist of a transmitter and receiver and if equipped for fault finding, usually have an optional A-frame pickup unit for use with the receiver. They are able to detect the location of ground faults in direct buried cables and can be highly accurate. See Chapter 4, Test Equipment, for more information on this equipment.

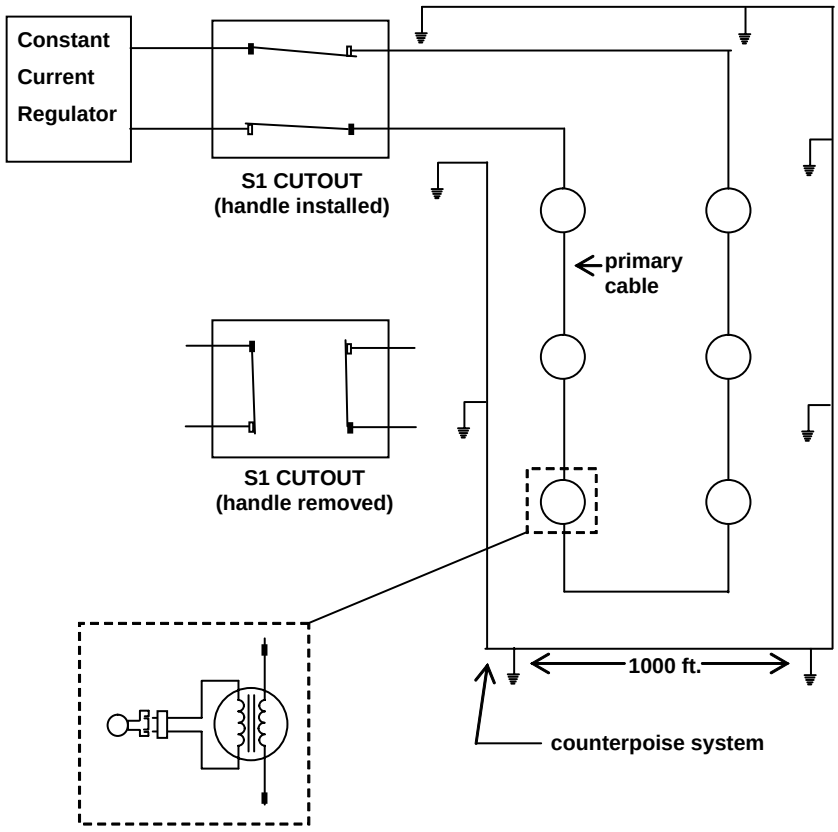

Figure 6-1. Typical Series Lighting Circuit

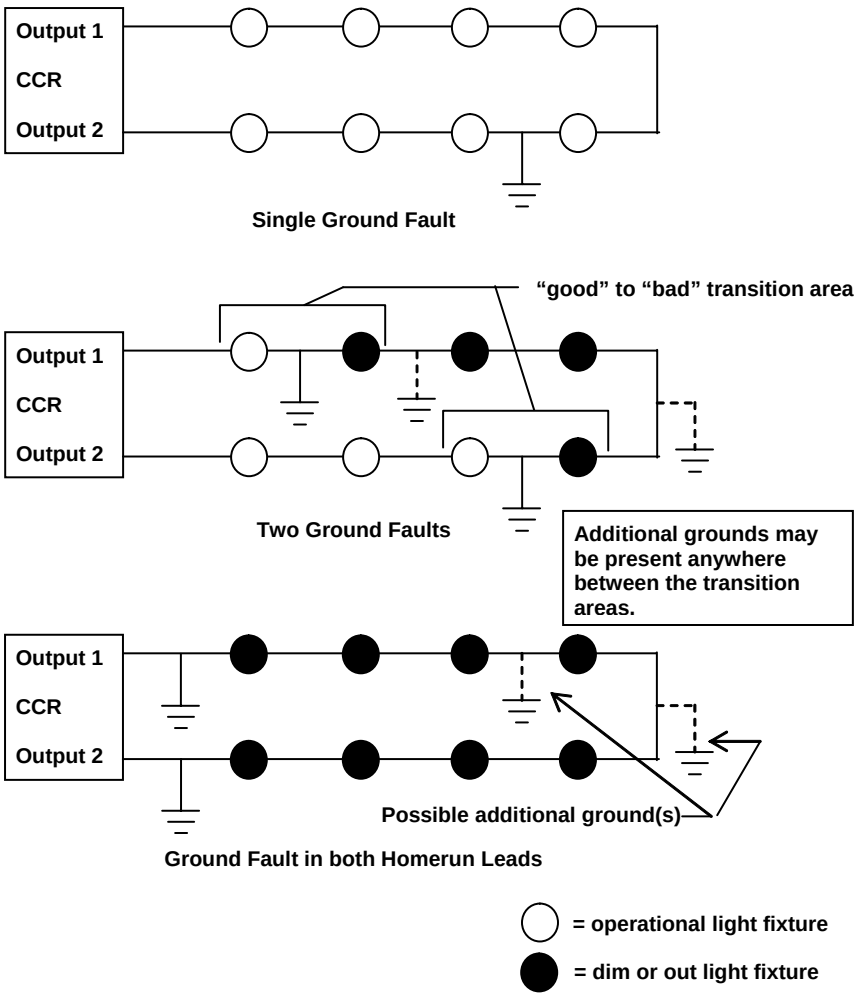

Figure 6-2. Typical Ground Faults

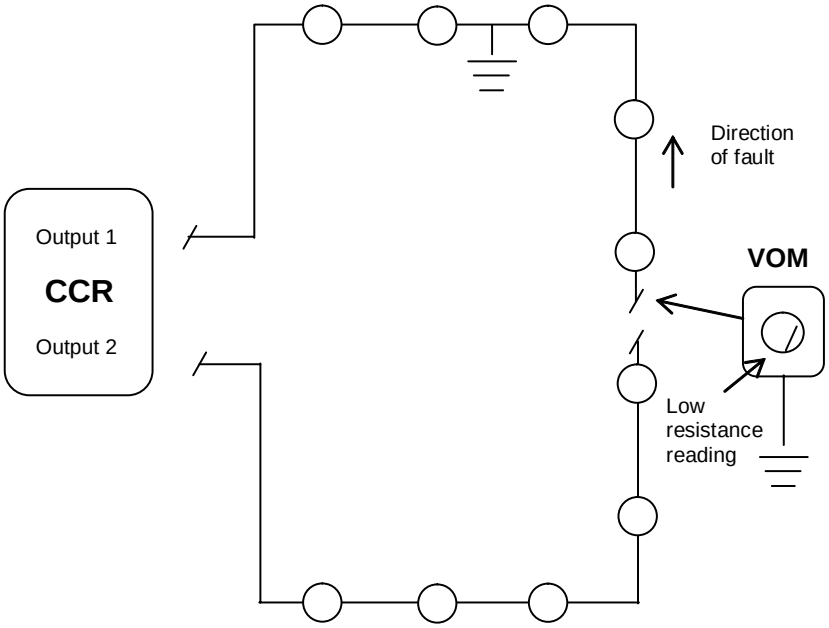

Figure 6-3a. Locating Ground Faults with the VOM

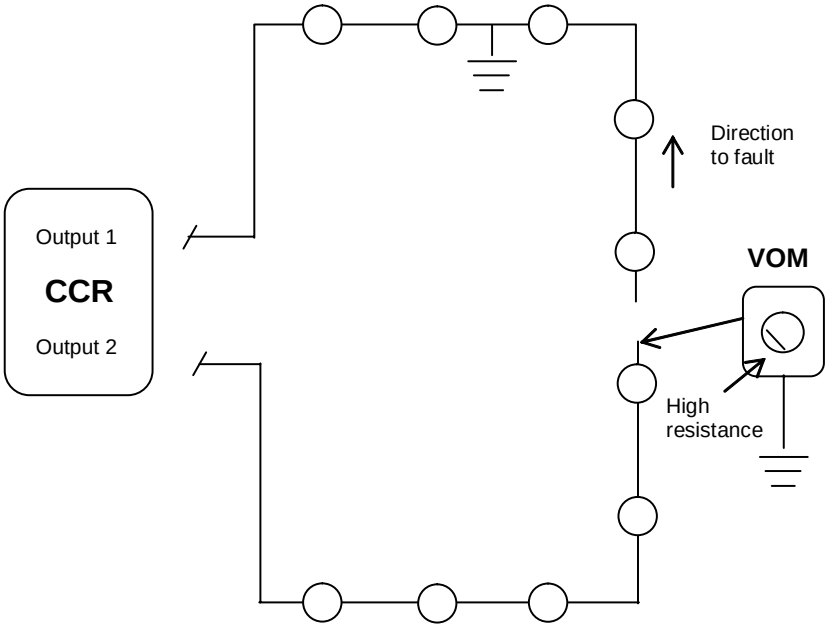

Figure 6-3b. Locating Ground Faults with the VOM

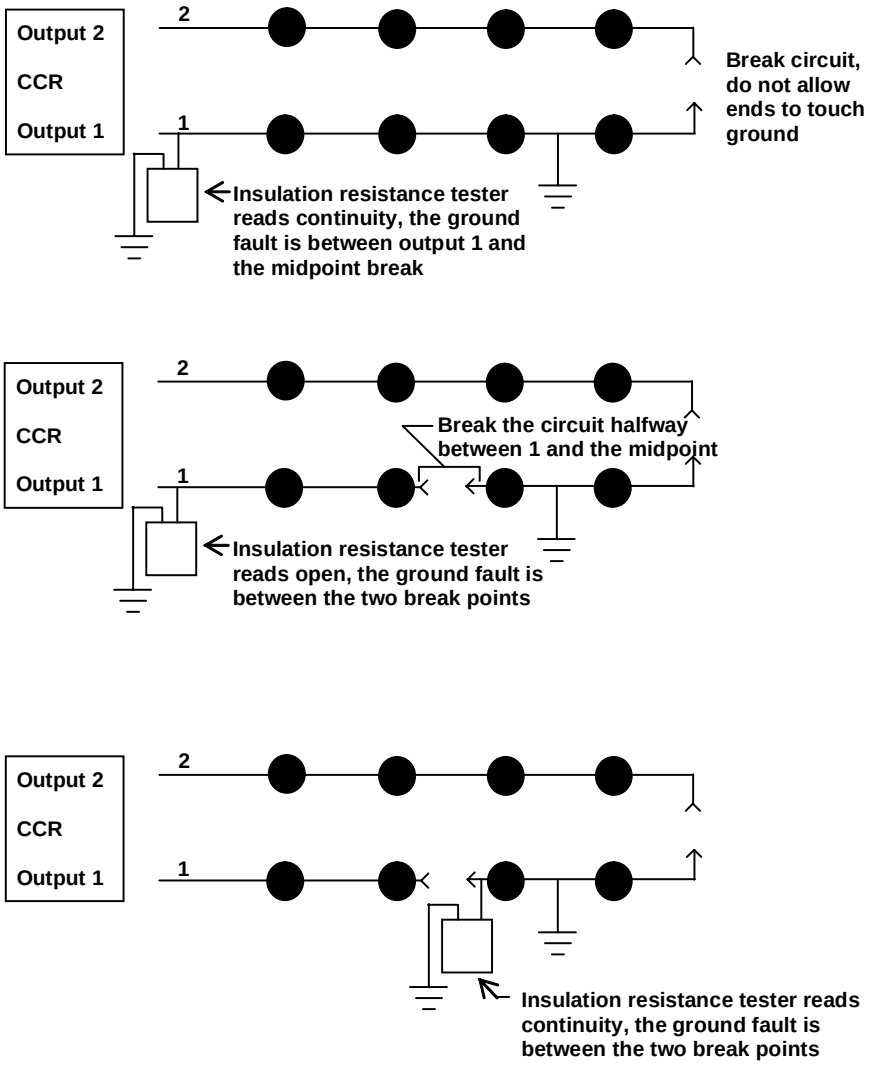

Figure 6-4. Alternative Method of Finding Ground Fault Using VOM or Insulation Resistance Tester

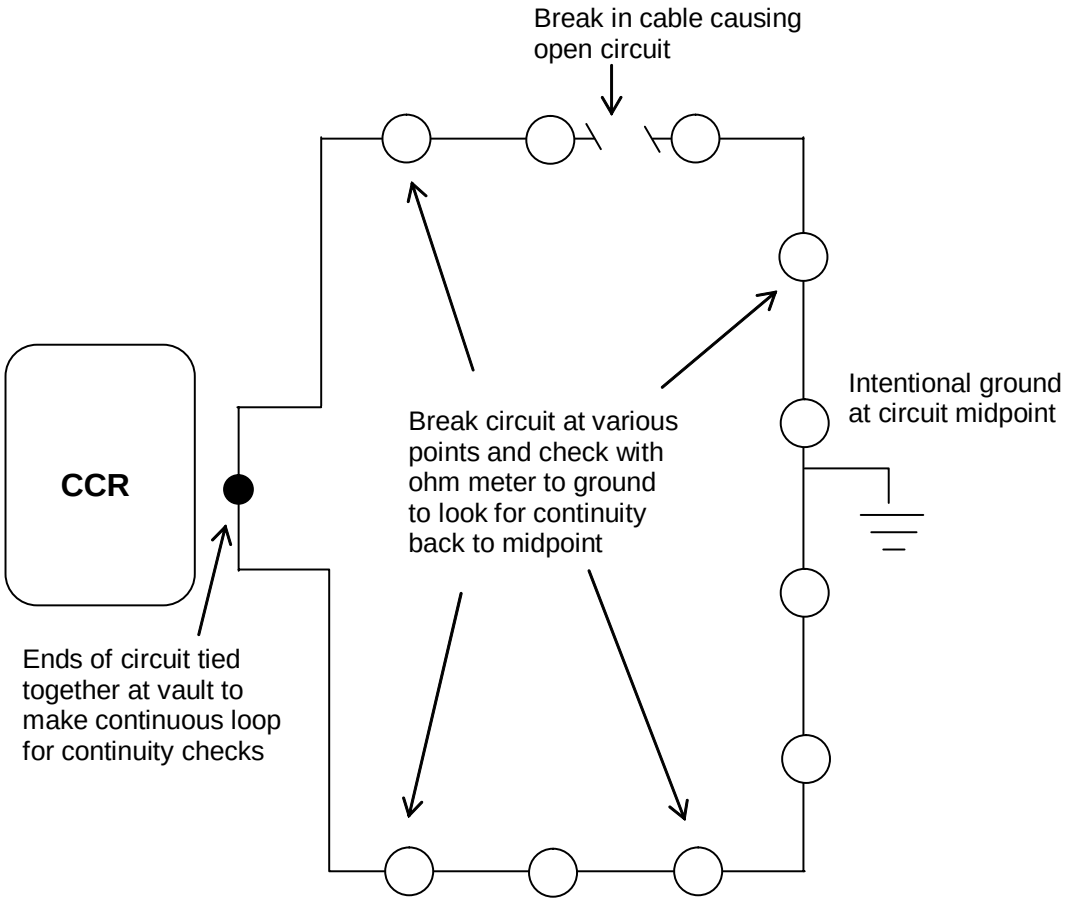

Figure 6-5. Locating Open Circuit Faults

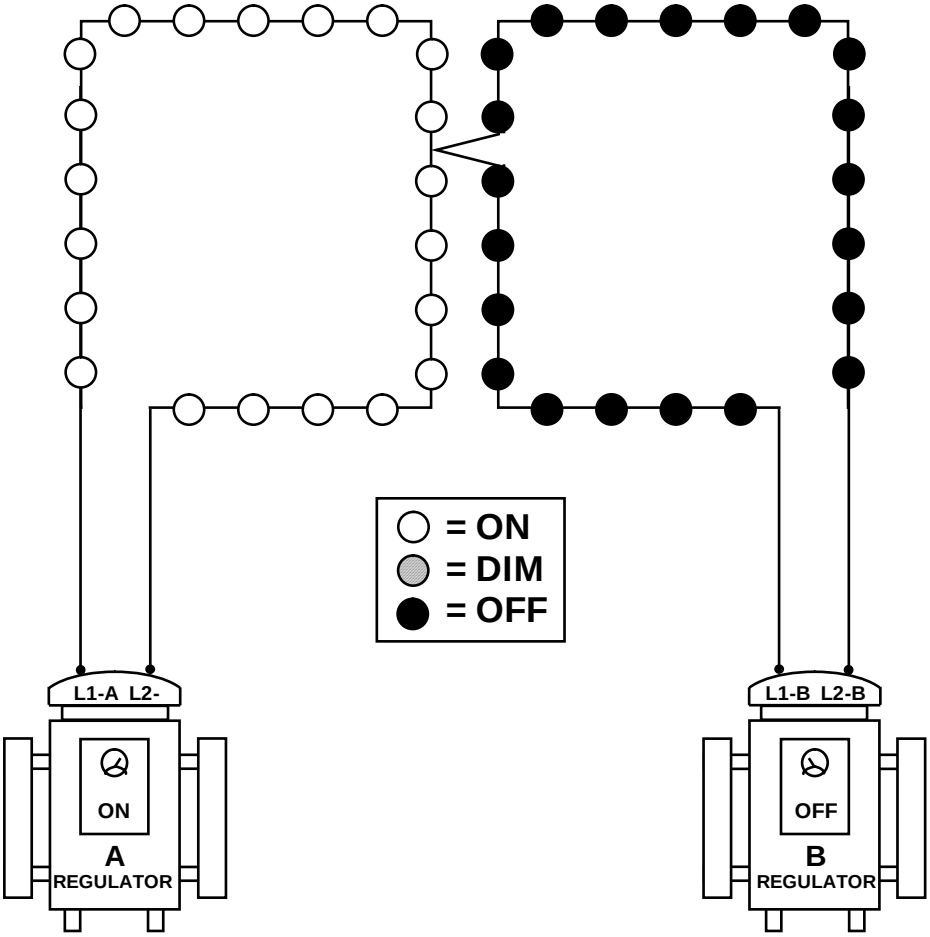

THIS CONDITION CAN BE DETECTED BY OHMMETER TESTING RESISTANCE BETWEEN LOAD "A" AND LOAD "B".

HAZARD EXISTS TO PERSONNEL WORKING ON EITHER LOAD "A" OR "B" WHEN THE OTHER LOAD IS ENERGIZED.

Figure 6-6. Single Load-to-Load Fault

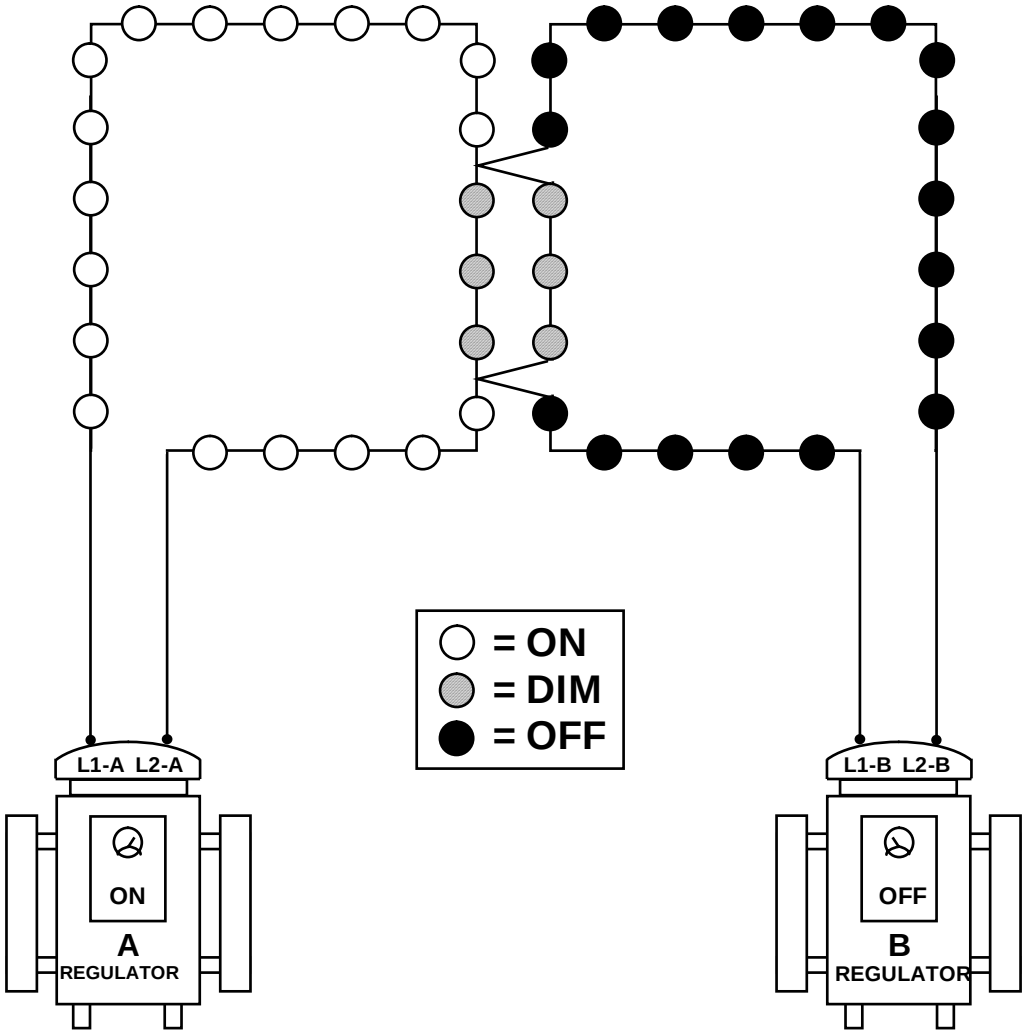

THIS CONDITION CAN BE DETECTED BY OHMMETER TESTING RESISTANCE BETWEEN LOAD "A" AND LOAD "B."

HAZARD EXISTS TO PERSONNEL WORKING ON EITHER LOAD "A" OR "B" WHEN THE OTHER LOAD IS ENERGIZED.

Figure 6-7. Two Load-to-Load Shorts

This figure illustrates what may happen when there are two load to load shorts on the circuits. Notice that the lights in this condition are affected, causing the area between the two shorts to dim on both circuits. If the illuminated lights on the B load were to go unnoticed, the presence of this condition could easily be confused with symptoms of two grounds on a single circuit. The give-away is the portion of the B load lights that are on. Driving the circuit would locate the bright/dim transitions and the location of the shorts. Had the load between the shorts of load A been much larger (more lights) than the load in between the shorts of load B, the smaller load would have been brighter. In the illustration, the loads between the shorts are equal and the current is divided equally between the two loads.

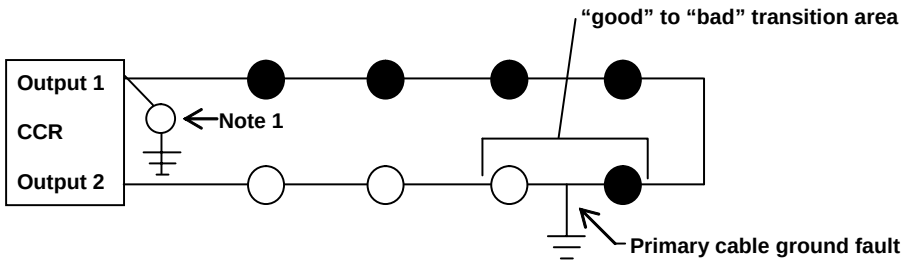

Figure 6-8a

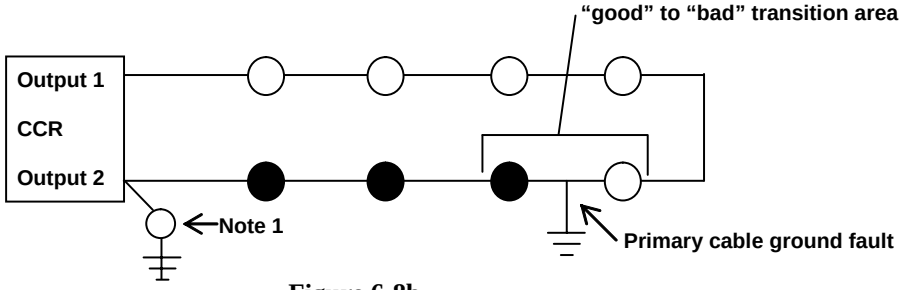

Figure 6-8b

NOTES:

1. **45 watt isolation transformer and light fixture connected between a regulator output terminal and earth ground. The ground resistance of the earth ground connection must be low.**
2. **When the circuit contains a single ground fault, the "good" to "bad" transition area will be in the same location with the test connection on either output 1 or output 2.**

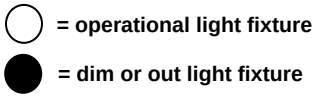

Figure 6-8a, b. Intentional Ground Test

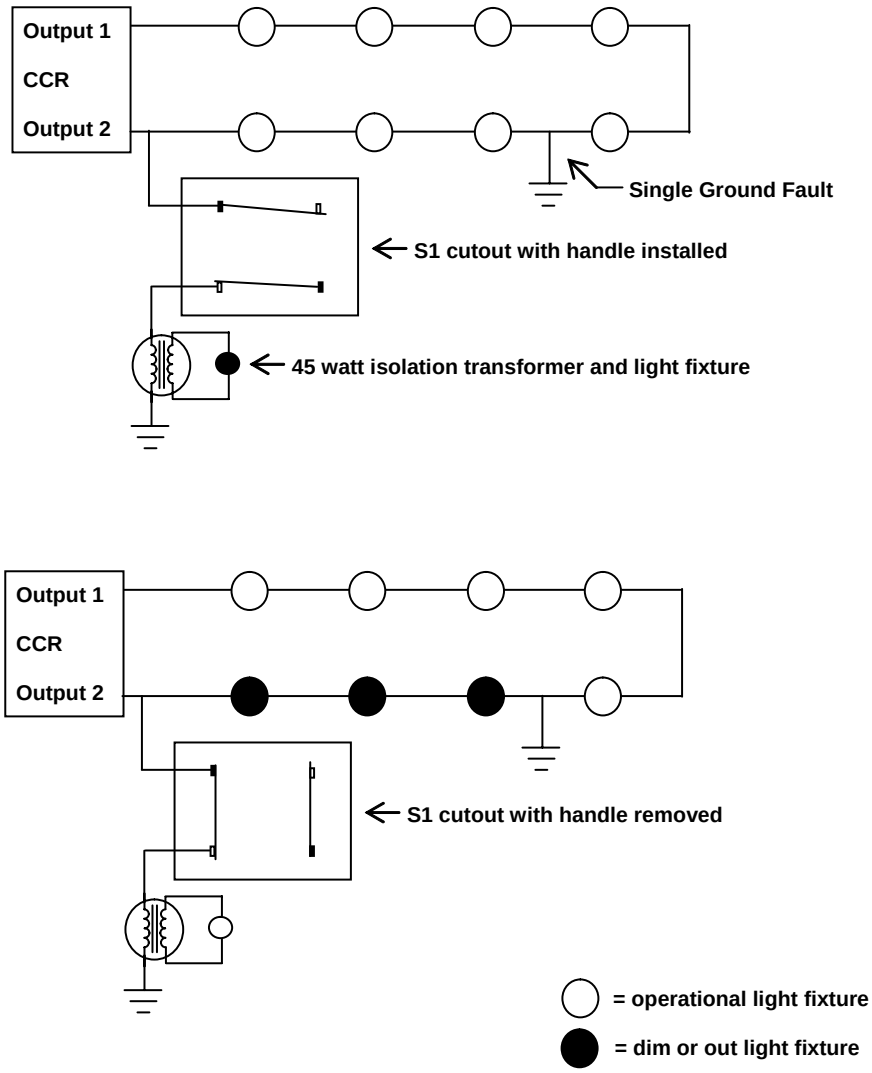

Figure 6-9. Intentional Ground Preventive Maintenance Tool

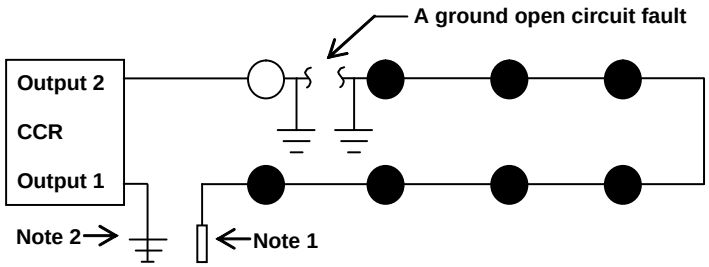

Figure 6-10a. Grounded Output Test on CCR Output 1

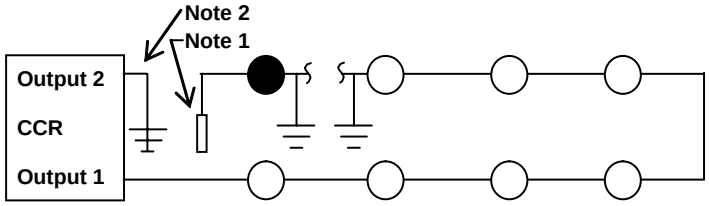

Figure 6-10b. Grounded Output Test on CCR Output 2

NOTES:

1. **Insulate and stay clear of the removed primary cable lead, lethal voltages may be present.**
2. **The ground resistance of this connection must be low.**
3. **If the regulator trips off on open circuit, the open circuit fault is not grounded or the regulator does not have the power to drive circuit.**

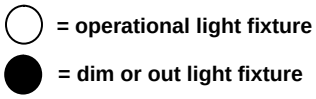

Figure 6-10a, b. Grounded Output Test

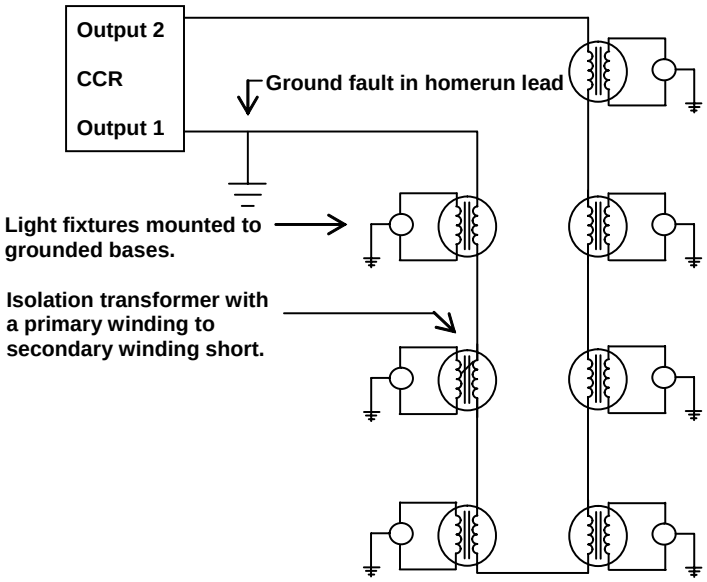

Figure 6-11. Dangerous Isolation Transformer/Circuit Ground Faults

Intentionally Left Blank

APPENDIX A. STANDARDS AND TOLERANCES.

A.0 PURPOSE.

This appendix contains standards and tolerances for visual aid equipment and systems as contained in the following tables:

Table	Equipment or System
1.	Beacons
2.	Medium intensity approach lighting systems (MALS, MALSF, MALSR)
3.	Omnidirectional approach lighting system (ODALS)
4.	Lead-in lights
5.	Runway end identifier lights (REIL)
6.	Visual approach slope indicators (VASI)
7.	Precision approach path indicators (PAPI)
8.	Runway and taxiway lighting systems
9.	Photoelectric devices
10.	Standby engine generators

Parameter	Standard	Tolerance / Limit	
		Initial	Operating
1. Rotation speed			
a. 10-inch	6 rpm	Same as standard	±1 rpm
	12 rpm	Same as standard	±1 rpm
b. 36-inch	6 rpm	Same as standard	±1 rpm
2. Input voltage	Same as lamp voltage rating	±3 percent	±5 percent
3. Vertical aiming	Locally established between 2-10 degrees	± ½ degree from established angle	Same as initial

Table A-1. Beacons

Parameter	Standard	Tolerance / Limit	
		Initial	Operating
1. Light units operational			
a. Steady burning	All	All	15% lamps out (random) – 2 lamps out; in 5-light bar – 1 light bar out
b. Flashing	All	All	1 unit out
2. Flashing rate	120 fpm	±2 fpm	±2 fpm
3. Input voltage	120V or 240V	±3%	±5%
4. Light unit alignment			
a. Vertical	Locally established	±1 degree	±2 degrees
b. Horizontal	Parallel to runway centerline	±1 degree	±2 degrees
5. Obstructions due to vegetation, etc.	No obstruction	Same as standard	Same as standard

Table A-2. Medium Intensity Approach Light Systems (MALS, MALSF, MALSR)

Parameter	Standard	Tolerance / Limit	
		Initial	Operating
1. Light units operational	All	All	1 unit out
2. Input voltage	120V or 240V	±3%	±5%
3. Flashing rate	60 fpm	±2 fpm	±2 fpm
4. Light unit alignment	Level	±1 degree	±2 degrees
5. Obstructions due to vegetation, etc.	No obstruction	Same as standard	Same as standard

Table A-3. Omnidirectional Approach Light System (ODALS)

Parameter	Standard	Tolerance / Limit	
		Initial	Operating
1. Light units operational	All	All	1 unit out in 3-light cluster
2. Flashing rate	Locally established	±2 fpm	±2 fpm
3. Input voltage	120V or 240V	±3%	±5%
4. Light unit alignment			
a. Vertical	Locally established	±1 degree	±2 degrees
b. Horizontal	Locally established	±1 degree	±2 degrees
5. Obstructions due to vegetation, etc.	No obstruction	Same as standard	Same as standard

Table A-4. Lead-in Lights

Parameter	Standard	Tolerance / Limit	
		Initial	Operating
1. Light units operational	All	All	All
2. Flashing rate			
a. Unidirectional type	120 fpm	±2 fpm	±2 fpm
b. Omnidirectional type	60 fpm	±2 fpm	±2 fpm
3. Input voltage	120V or 240V	±3%	±5%
4. Alignment (unidirectional)			
a. Vertical			
(1) With baffles	3 degrees	±1 degree	-1 degree +2 degrees
(2) Without baffles	10 degrees	±1 degree	±2 degrees
b. Horizontal		±1 degree	±2 degrees
(1) With baffles	10 degrees	±1 degree	±2 degrees
(2) Without baffles	15 degrees (away from runway centerline)	±1 degree	±2 degrees
5. Obstructions due to vegetation, etc.	No obstruction	Same as standard	Same as standard

Table A-5. Runway End Identifier Lights (REILs)

Parameter	Standard	Tolerance / Limit	
		Initial	Operating
1. Lamps burning			
a. VASI	All	All	Not more than one lamp out per box
b. SAVASI	All	All	
2. Vertical aiming (VASI and SAVASI)			
a. Downwind bar (bar no. 1)	½ degree below established glide path angle	±2 minutes	±6 minutes
b. Upwind bar (bar no. 2)	Established glide path angle	±2 minutes	±6 minutes
3. Vertical aiming (3-bar VASI)			
a. Downwind bar (bar no. 1)	2.75 degrees	±2 minutes	±6 minutes
b. Middle bar (bar no. 2)	3.0 degrees	±2 minutes	±6 minutes
c. Upwind bar	3.25 degrees	±2 minutes	±6 minutes
4. Horizontal alignment	Parallel to runway centerline	± ½ degree	± ½ degree
5. Tilt switch	¼ to ½ degree below and ½ to 1 degree above established light bar angle	Same as standard	Same as standard
6. Lamp current (current-regulated)	Rated current of lamps	Same as regulator currents for type of regulator used	
7. Lamp voltage (voltage-regulated)	Rated voltage of lamps	±3%	±5%
8. Obstructions due to vegetation, etc.		Same as standard	Same as standard

Table A-6. Visual Approach Slope Indicator (VASI)

Parameter	Standard	Tolerance / Limit	
		Initial	Operating
1. Lamps burning			
a. PAPI	All	All	Not more than one lamp out per box
2. Vertical aiming [1]			
a. Unit D (close to runway)	3° 30’	±2 minutes	±6 minutes
b. Unit C (2nd from runway)	3° 10’	±2 minutes	±6 minutes
c. Unit B	2° 50’	±2 minutes	±6 minutes
d. Unit A (farthest from runway)	2° 30’	±2 minutes	±6 minutes
3. Horizontal alignment	Parallel to runway centerline	± ½ degree	± ½ degree
4. Tilt switch	¼ below to ½ degree above established light bar angle	Same as standard	Same as standard
5. Lamp current (current-regulated)	Rated current of lamps	Same as regulator currents for type of regulator used	
6. Lamp voltage (voltage-regulated)	Rated voltage of lamps	±3%	±5%
7. Obstructions due to vegetation, etc.	No obstruction	Same as standard	Same as standard

[1] Unless a different standard is established locally, angles shown are for a 3 degree glide path.

Table A-7. Precision Approach Path Indicator (PAPI)

Parameter	Standard	Tolerance / Limit	
		Initial	Operating
1. Runway lights			
a. Threshold lights	All on	All on	75% on for VFR and non-precision IFR runways
b. End lights	All on	All on	75% on
c. Edge lights	All on	All on	85% on except for CAT II and CAT III runways which require 95% serviceable
d. Centerline lights	All on	All on	95% serviceable
e. Touchdown Zone lights	All on	All on	90% serviceable
2. Taxiway lights			
a. Edge lights	All on	All on	85% on - see note 3 for CAT III taxi routes
b. Centerline lights	All on	All on	90% on - see note 3 for CAT III taxi routes
c. Elevated Runway Guard Lights	All on	All on	No more than one light in a fixture unserviceable
d. In-pavement runway guard lights	All on	All on	No more than three lights per location unserviceable nor two adjacent lights unserviceable
e. Runway stop bar lights	All on	All on	No more than three lights per location unserviceable nor two adjacent lights unserviceable
3. Lamp current	Amperes	Amperes	Amperes
a. 3 step, 6.6A	6.6	6.40-6.70	Same as initial
	5.5	5.33-5.67	Same as initial
	4.8	4.66-4.94	Same as initial
b. 5 step, 6.6A	6.6	6.40-6.70	Same as initial
	5.2	5.04-5.36	Same as initial
	4.1	3.98-4.22	Same as initial
	3.4	3.30-3.50	Same as initial
	2.8	2.72-2.88	Same as initial
c. 5 step, 20A	20.0	19.40-20.30	Same as initial
	15.8	15.33-16.27	Same as initial
	12.4	12.03-12.77	Same as initial
	10.3	9.99-10.61	Same as initial
	8.5	8.24-8.76	Same as initial
4. Lamp voltage (parallel circuits)	Lamp voltage rating	±3%	±5%

Table A-8. Runway and Taxiway Lighting Systems

Runway and taxiway lighting systems continued:

1. To provide continuity of guidance, the allowable percentage of unserviceable lights should not be in a pattern that would alter the basic pattern of the lighting system. Additionally, an unserviceable light should not be adjacent to another unserviceable light except in a barrette or a crossbar where two adjacent unserviceable lights may be permitted. With respect to barrettes, crossbars and runway edge lights, lights are considered to be adjacent if located consecutively and:

   Laterally - in the same barrette or crossbar; or

   Longitudinally - in the same row of the edge lights or barrettes.

2. Threshold lights for precision runways are part of the approach lighting system and are not included in this table.

3. Taxiway lighting on low-visibility (CAT III) taxi routes.

   a. Taxiway edge lights, taxiway edge reflectors and taxiway centerline lights along the low-visibility route – no two adjacent lights or reflectors unserviceable.

   b. Taxiway clearance bar lights – no more than one light at a location unserviceable.

Parameter	Standard	Tolerance / Limit	
		Initial	Operating
1. Photocell operation (PAPI)			
a. Turn-on to high setting	55 ft-cd	±5 ft-cd	Same as initial
b. Turn-on to low setting	30 ft-cd	±5 ft-cd	Same as initial
2. Photocell operation (windsock, beacon, runway lights)			
a. Turn-on	Below 55 ft-cd	±5 ft-cd	Same as initial
b. Turn-off	Above 30 ft-cd	±5 ft-cd	Same as initial
3. Vertical orientation	25 degrees from vertical	±5 degrees	Same as initial
4. Horizontal orientation	True north	±5 degrees	Same as initial

Table A-9. Photoelectric Devices

Parameter	Standard	Tolerance / Limit	
		Initial	Operating
1. Starting time (1)	15 seconds or less	Same as standard	Same as standard
2. Potential relays commercial power			
a. 120V system			
Dropout	108V	±3V	Same as initial
Pickup	114V	±3V	Same as initial
b. 208V system			
Dropout	191V	±3V	Same as initial
Pickup	191V	±3V	Same as initial
c. 240V system			
Dropout	200V	±3V	Same as initial
Pickup	210V	±3V	Same as initial
d. 480V system			
Dropout	455V	-0, +5V	Same as initial
Pickup	465V	-0, +5V	Same as initial
3. Potential relay engine power			
a. Pickup voltage			
120V	112V	±3V	Same as initial
208V	197V	±3V	Same as initial
240V	210V	±3V	Same as initial
480V	465V	-0, +5V	Same as initial
b. Dropout voltage	N/A	N/A	N/A
4. Pickup frequency	60 Hz	57-60 Hz	Same as initial

(1) For CAT II operations, the engine generator is normally started and used for prime power. In the event of generator failure during this time, it is required that the CAT II lighting load be switched back to commercial power within 1.1 seconds.

Table A-10. Standby Engine Generators

Parameter	Standard	Tolerance / Limit	
		Initial	Operating
5. Time delay setting (2)	15 minutes	15-20 minutes	Same as initial
6. Voltage regulator	Set to match commercial power	±3V	Same as initial
7. Frequency sensing device	Contacts to open below 57 Hz	Same as standard	Same as standard
8. Transfer relay (3)	1-3 seconds	Same as standard	Same as standard
9. Frequency	60 Hz	±5 Hz	Same as initial
10. Output voltage (4)			
a. 120V system	114-126V	Same as standard	Same as standard
b. 280V system	197-218V	Same as standard	Same as standard
c. 240V system	228-252V	Same as standard	Same as standard
e. 480V system	456-504V	Same as standard	Same as standard

(2) Maximum before transfer to commercial power – not valid where manual transfer to commercial power is made.

(3) At facilities where the commercial power source has a record of momentary transience resulting in voltage drops, unnecessary engine starts and power transfer may be eliminated by increasing the tolerances of the PR relays or under-voltage devices dropout and pickup voltage settings shown in this table. The tolerances may be extended to, but not exceed, the acceptable frequency and voltage characteristics of the facility equipment. Any voltage regulators installed to stabilize the commercial voltage to the facility will be considered facility equipment. The TR relay or device time delay may be extended beyond 3 seconds to where, under normal starting conditions, the power from the engine generator will be available to the facility within 15 seconds after commercial power failure. The locally established tolerances shall be posted on the inside of the engine generator control panel door near the PR and TR relays.

(4) Adjust output voltage to match service entrance voltage or facility requirements.

Table A-1. Standby Engine Generators (continued)

Intentionally Left Blank