# The King of Desks:

# Wooton's Patent Secretary

AUTHENTICATED
U.S. GOVERNMENT
INFORMATION
GPO

SMITHSONIAN STUDIES IN HISTORY AND TECHNOLOGY

NUMBER 3

# The King of Desks:
# Wooton's Patent Secretary

*By*

Betty Lawson Walters

SMITHSONIAN INSTITUTION PRESS

CITY OF WASHINGTON • 1969

# THE KING OF DESKS.

## Wooton's Patent

# CABINET OFFICE SECRETARY.

COMPACT, NEAT AND USEFUL.

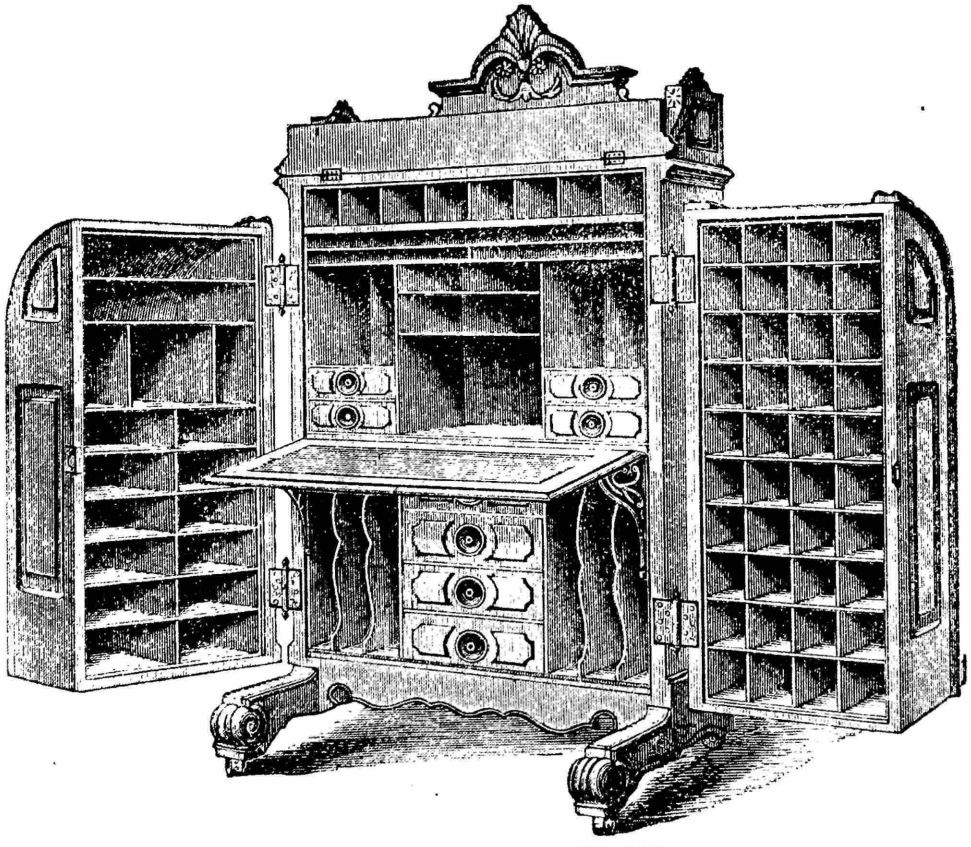

THE ABOVE CUT REPRESENTS DESK OPEN.

For Full Information, Catalogues, Testimonials, &c., call on or address

## THE WOOTON DESK CO.,

DESIGNERS AND MANUFACTURERS,

**INDIANAPOLIS, IND.**

See preceding page.

ADVERTISEMENT from *Indianapolis City Directory*, 1876. (Photograph from the Library of Congress.)

# The King of Desks: Wooton's Patent Secretary

*Three Wooton desks that are in the national collections at the Smithsonian Institution were the inspiration for this paper, which traces the history of the Wooton Desk Company and its products. Wooton desks were purchased by prominent persons in Europe and South America, as well as in the United States. They became a kind of status symbol, reflecting high Victorian appreciation for flexibility in furniture. Their varied exterior trimmings made them available for persons with different incomes and preferences.*

THE AUTHOR: *Betty Lawson Walters is a museum specialist in the division of cultural history in the Smithsonian Institution's Museum of History and Technology. This paper represents the first work in the author's continuing study of nineteenth-century cabinetmakers in the Midwest.*

"One hundred and ten compartments, all under one lock and key. A place for everything and everything in its place. Order Reigns Supreme, Confusion Avoided. Time Saved. Vexation Spared. With this Desk one absolutely has no excuse for slovenly habits in the disposal of numerous papers, and a person of method may here realise that pleasure and comfort which is only to be attained in the verification of the maxim, 'A place for everything, and everything in its place.' Every portion of the desk is immediately before the eye. Nothing in its line can exceed it in usefulness or beauty, and purchasers everywhere express themselves delighted with its manifold conveniences. Hundreds in use in Great Britain."

IN THIS MANNER Richards, Terry, and Company, London dealers for the "Wooton Cabinet Office Secretary" desk, advertised their wares in *The Graphic,* an illustrated British newspaper, on 17 May 1884. It is readily apparent that this monumental desk suited the expansive age in which it appeared. That the desk is regaining its former status as a piece of elegant and noteworthy furniture is evidenced by the increasing number of inquiries received at the Smithsonian Institution about Wooton desks still in existence.

The Wooton desk originated in Indianapolis, Indiana, where in 1870 the furniture business was flourishing. The city was located in the center of a great hardwood area which was just beginning to be exploited and which provided ready supplies of walnut, oak, ash, poplar, and other woods. Eighteen companies making veneers, school furniture, wagons, carriages, organs, pianos, sewing machine cabinets, and other furniture employed 326 men and produced furniture valued at $475,290.[1] The Indianapolis Board of Trade announced that "the furniture manufactured here finds

[1] W. R. HOLLOWAY, *Indianapolis, A Historical and Statistical Sketch of the Railroad City* (Indianapolis, 1870), p. 356.

sale not only throughout our own State, but also in Illinois, Missouri, Kansas, Nebraska, and other Northwestern States." [2] Within five years one of these furniture establishments, the Wooton Desk Company, had dealers selling its desks in England, Scotland, Canada, Europe, South America and the Far East,[3] and after 90 years its wares are found from Australia to California, still attracting attention and serving their owners in sturdy style (Appendix II).

In 1870 William S. Wooton (sometimes incorrectly spelled Wooten) arrived in Indianapolis from Richmond, Indiana, where previously he had been a partner of George H. Grant and Company, which manufactured "School furniture, office and court supplies," including a desk known as the "Richmond Rustic." [4] The 1870 industrial census recorded George H. Grant and Company with 16 employees, using one plane, two saws, frizzers, one sticker, and one morticing tool to make 12,000 school desks, 200 office chairs, 300 office desks, 150 church pews, and 1,000 settees, valued at $60,000.

In Indianapolis Mr. Wooton established Wooton and Company, which during its first year was recorded in the same census as making "School Furnit., Office Desks, Church Furnit." worth $18,500 per annum. The firm's annual consumption of raw materials included "lumber, cast iron, varnish, oils, &c," with a total value of $1,800. The motive power of the company was recorded as hand power, and the number of male employees was four, one of whom was probably William Wooton.[5]

Wooton and Company evidently did not make an immediate impact on Indianapolis. In 1872 when contracts were let for new school furniture for the city schools, Wooton's bid was accepted only after another company was unable to fulfill its agreement.[6] That summer at the Indiana State Fair, William S. Wooton and Company won a five-dollar prize for a bookcase, as well as a three-dollar prize for a writing desk, and also exhibited a five-piece set of office furniture and a collection of schoolhouse furniture.[7] Perhaps among the school furniture exhibited were the two school desks—patent numbers 83,896 and 87,386—which Mr. Wooton had designed in 1868 and 1869 (Figure 1), early evidence of his interest in adaptable furniture. In his application for his first patent, Mr. Wooton stated that "the object of my invention is to so construct a combined school desk and seat that the same may be folded up into a very small compass, for convenience in cleansing the school-room and for adapting the latter as a hall in which gymnastic exercises may be practiced, and also to facilitate the transportation of the desk from place to place." This patent provided a desk and seat which could be folded together and made into a vertical unit.

On 6 October 1874, the Wooton desk, officially called "Wooton's Patent Cabinet Office Secretary," came into being when the United States Patent

[2] *Semi-Annual Report of the Indianapolis Board of Trade of Indianapolis, Indiana, January 1871* (Indianapolis: Indianapolis Journal Co., 1871), p. 31.

[3] *Furniture Gazette*, 28 August 1875; *Illustrated Catalogue of Wooton's Patent Cabinet Secretaries and Rotary Office Desks*, 1876.

[4] *Memoirs of Wayne County and the City of Richmond, Indiana*, edit. Henry Clay Fox (Madison, Wisconsin: Western Historical Association, 1912), vol. 2, pp. 504, 651.

[5] Ninth Census, Industry, Indianapolis, Indiana, 1870 (MSS, Indiana Archives).

[6] *Indianapolis Daily Sentinel*, 17 August 1872.

[7] *Thirteenth Annual Report of the Indiana State Board of Agriculture* (Indianapolis: R. J. Bright, 1872), p. 188.

ACKNOWLEDGMENTS

The assistance of the following persons was most helpful and is gratefully acknowledged: Miss Rodris Roth, associate curator, division of cultural history, Smithsonian Institution; Miss Caroline Dunn, Indiana Historical Society; Mr. George Bird, curator, department of decorative arts, Henry Ford Museum; Mrs. Lois L. Childers, President Benjamin Harrison Memorial Home; Miss Deidra Allan; Mr. Henry A. Alexander and Mr. Richard K. Hofmeister, photographers, Smithsonian Institution.; Mr. Herbert Collins, assistant curator, division of political history, Smithsonian Institution.

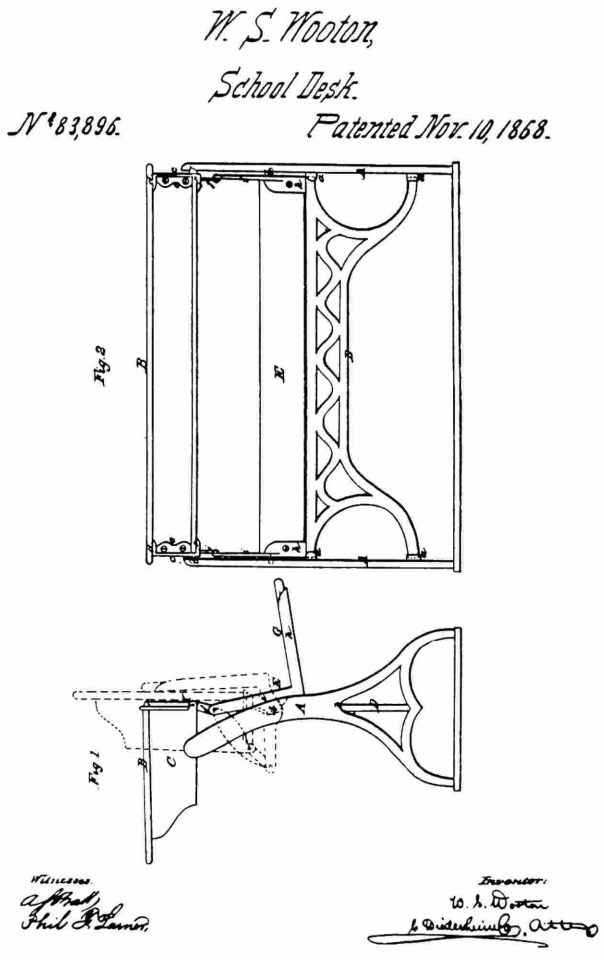


Figure 1.—PATENT DRAWING of the school desk for which patent number 83,896 was issued to William S. Wooton of Richmond, Indiana, 10 November 1868.

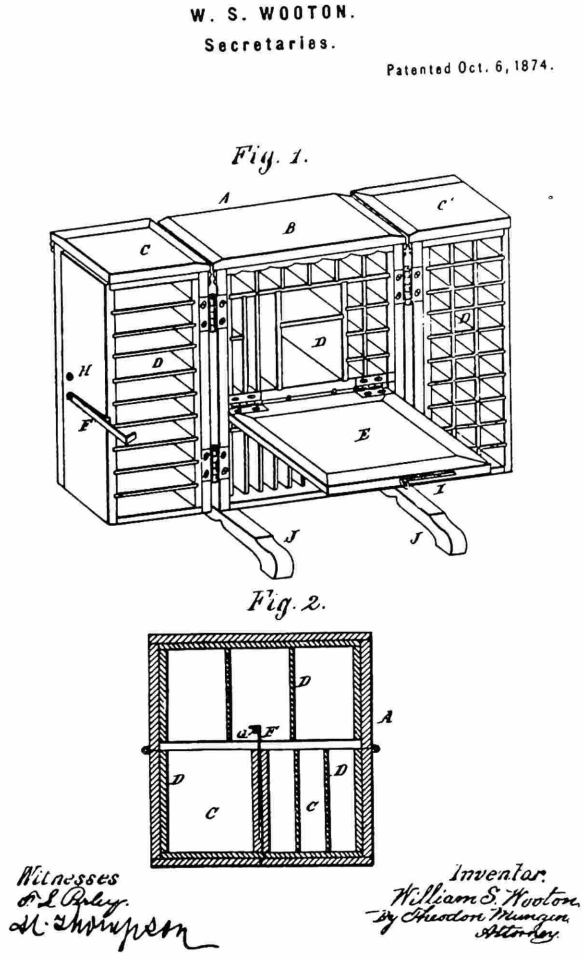


Figure 2.—DRAWING accompanying William S. Wooton's application for a patent on his "Improvement in Secretaries," patent number 155,604, issued 6 October 1874 (Appendix III.)

Office issued patent number 155,604 (Figure 2) to William S. Wooton for an "improvement in secretaries," consisting

> of a secretary constructed in three parts, two of which are together equal in width to the other, each part being provided with compartments or pigeon-holes suitable for storing books, papers, &c., and the two lesser parts hinged to the greater part, to serve as doors to the secretary . . . [8] (Appendix III).

A month later, William Wooton, John G. Blake, and Harmon H. Fulton filed articles of association for the Wooton Desk Company with the Indiana Secretary of State, with the object of manufacturing and selling "Office Desks, School and Church furniture."[9] They listed a capital stock of $60,000.

Rapid activity followed to get the production of the desk underway. Throughout the month of December, Wooton's advertisements appeared in the *Indianapolis Journal* for a "CABINET OFFICE SECRETARY, The most complete desk for filing documents ever made. Well adapted to the use of county officers." Names of county officers convinced of the validity of this advertisement are included in the fragmentary lists of owners given in the company's catalog (Appendix VII).

[8] U.S. Patent Office, Specifications and Drawings, 1874.

[9] Corporation Records, Office of the Secretary of State, Indiana (MSS, Indiana Archives).

On 5 March 1875, the *Journal* reported "The Wooten Desk Company will erect a factory this season with room for 150 men. Thus, from little industrial acorns do great manufactories grow." From 27 March through 15 April the company was advertising locally for "CABINET MAKERS—Twenty good workmen wanted immediately. Good wages and steady employment. Inquire at Factory, corner Merrill and New Jersey streets." The *Journal* noted on 7 April that the company "meditate a change of location, as their present quarters are too small for their increasing business." By November the capital stock had been increased to $500,000.[10] After the firm moved in April 1876 to larger quarters on the site of a former piano factory, it was manufacturing 150 desks per month.[11] Some of these undoubtedly were the Rotary Desk model, for which Wooton had been granted patent number 172,362 on 18 January 1876 (Figure 3; Appendix IV).

The year 1876 seems to have been the peak year for the company. Wooton's Cabinet Office Secretary and a Rotary Office Desk were exhibited [12] in the Indiana Building and among American manufactures at the Centennial Exposition in Philadelphia and were "commended for compactness, convenience, and utility." [13] Notices and advertisements for the desks appeared in popular local and nationwide newspapers, literary magazines, and business trade journals throughout the United States and England [14] (Figures 4 and 5), and the company published its second annual catalog, describing the various styles of Wooton desk and stating that "The demand in this country and Europe is steadily increasing. It is our aim to stand at the head in our line, and make our work a synonym of utility, durability and elegance." [15]

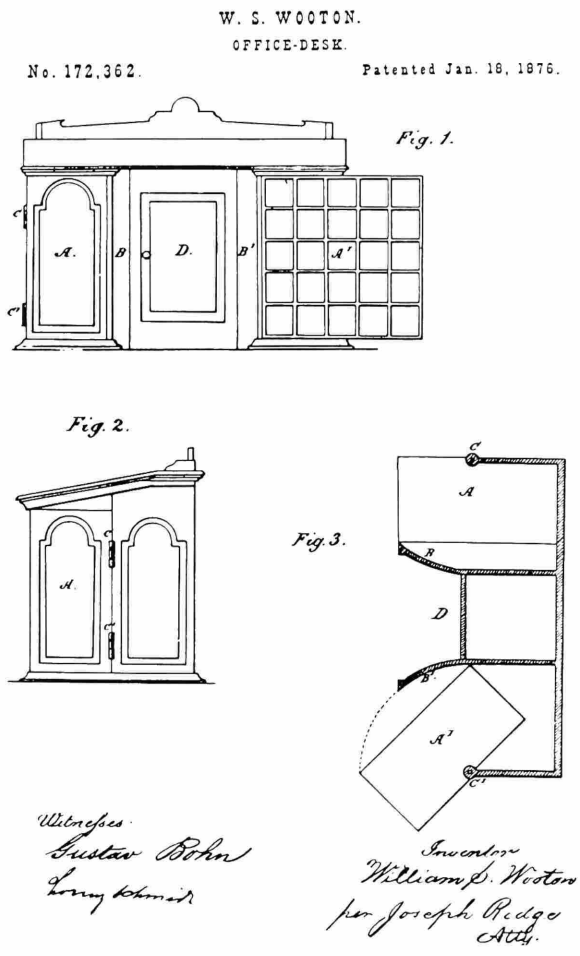


Figure 3.—PATENT NUMBER 172,362, for an "Improvement in Office Desks," William S. Wooton, 18 January 1876. This is the patent on which the Rotary Desk was based. (See Appendix IV for specifications.)

From the heart of the United States, over the twelve railroad lines serving Indianapolis, Mr. Wooton's desks were going far afield with help from a well-managed publicity campaign, becoming a symbol of the burgeoning nature of a growing industrial nation. By this time the company probably had ceased making school and church furniture, for Wooton no longer was listed in local news items among bidders for school furnishing contracts or in the city directory among school furniture manufacturers (Appendix I). No Wooton advertisements have been found for products other than the Wooton desks.

The Wooton desk was made to resemble when closed a panelled cylinder-front desk with a cupboard base. The front opened vertically from the center, and the

[10] Corporation Records, Office of the Secretary of State, Indiana (MSS, Indiana Archives).

[11] *Indianapolis News*, 14 April 1876.

[12] U.S. Centennial Commission, *International Exhibition, 1876, Official Catalog*, rev. ed. (Philadelphia: John R. Nagle & Co., 1876), p. 111.

[13] U.S. Centennial Commission, *International Exhibition, 1876, Reports and Awards*, edit. Francis A. Walker (Washington, D.C.. Government Printing Office, 1880), vol. 4, p. 13.

[14] Examples: Indianapolis newspapers (*Journal, Sentinel*); national newspapers (*Frank Leslie's Illustrated Newspaper* [New York] and *The Graphic* [London]); literary magazine (*Lippincott's*); business and trade journals (*The Furniture Trade Review, Railroad Age*); women's magazine (*The Queen* [London]).

[15] The first known catalog was *Descriptive Catalogue and Price-List of Wooten's Patent Cabinet Office Secretary*, 1875 (copy in the Baird papers, Smithsonian Archives); the second was *Illustrated Catalogue of Wooton's Patent Cabinet Secretaries and Rotary Office Desks*, 1876 (copy in the Smithsonian Library).

# OF ALL AMERICAN INVENTIONS

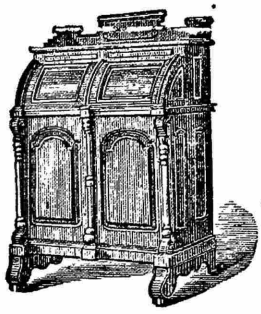

THE

"WOOTON" PATENT

## CABINET SECRETAIRE

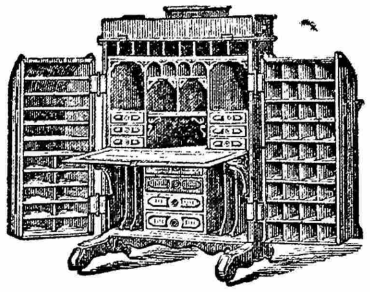

Are, for BUREAUS or BOUDOIRS, the best, most useful, elegant, and convenient DESK for BUSINESS, Professional, Literary, or Private Gentleman or Lady, ever invented.

One key only to entire Desk.
Requires but limited floor space.
Contents kept entirely free from dust or damage.
Change of position effected without effort.

Call and inspect, or write for Prices and Testimonlals to

Can be opened or closed in half a minute.
Every particle of space practically utilised.
Combines neatness, system, and order.
Every section in reach without changing position.

**FRANCIS AND JAMES SMITH, 60, BERNERS STREET, LONDON; and Gordon Street, Glasgow.**

Figure 4.—ADVERTISEMENT in *The Queen, the Lady's Newspaper* (London), 1 July 1876. No door handle, letter slot, or lock is shown. (Photograph from the Library of Congress.)

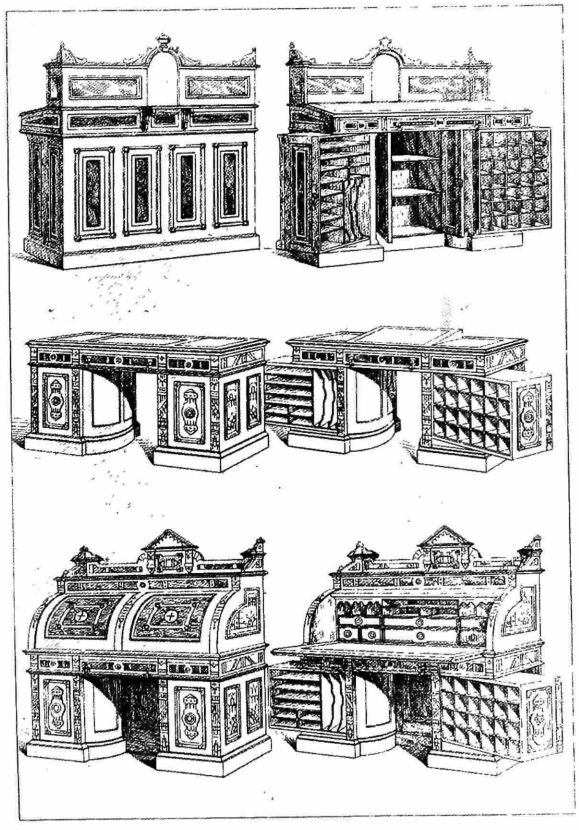

Figure 5.—ILLUSTRATION from an article in *The Furniture Gazette* (London), 23 December 1876. (Photograph from the Library of Congress.)

two doors, or wings, opened out to reveal the right wing full of pigeonholes, the left wing divided into vertical and horizontal shelves. Many models had in their left wing a small compartment with a glass-paned door to serve as the letter box behind the exterior letter drop (Figure 9). With the wings open, the main carcase showed four drawers in the lower section, surrounded by vertical shelves on the right, horizontal shelves on the left. A writing flap, its upper surface lined with green felt which was sometimes bordered by tape embossed in a Greek-key pattern, could be lowered to reveal several drawers, additional shelves, pigeonholes, and compartments above. In some examples, the writing flap rested on cast openwork metal brackets (Figure 4); in others, to quote the 1876 catalog, "the writing leaf is supported by an ingenious automatic device, making it a perfectly solid table when in position for use." This ingenious device consisted of two

sliding metal rods (Figure 8). A narrow flap hinged across the top could be raised to reveal several additional narrow shelves or pigeonholes. The desks rested on bracket feet and could be rolled about easily, despite the massive size of the desk, on sets of double casters. Like Wooton's first school desks, the Wooton secretary could be folded up and put away.

Evidently some people objected to this convenience, realizing that it involved extra effort on the part of the user. Following the initial mention in England of the new Wooton desk, which was hailed in *The Furniture Gazette* of 28 August 1875, as "a valuable invention" and an "ingenious article of furniture," a man who signed himself "TRUE BRITON" found faults in this American product. The faults he found may have been factors contributing to the eventual decline in popularity of the desk. On 15 July 1876, *The Furniture Gazette* published his letter as follows:

> This recently introduced article is a good-looking piece of furniture when closed and a very convenient looking one when opened. To test its convenience, let us imagine a business man in a hurry to write a note. Having found his key he unlocks the doors and carefully opens them one at a time; he then lifts the top piece, and draws a chair up; he next arranges the fall [writing flap], then dives into the proper recesses for the necessary material, and, after all this preparation, he may commence writing. Having finished he must carry his chair away, for it is in the way of the doors closing, remove his papers, as otherwise he cannot arrange the fall; he then lets the top down, closes the doors one by one, and locks up. Much ado this, I think, to write a note.

After describing the ease with which the usual English desk could be used, the "TRUE BRITON" continued:

> In the Wooton desk the complication is immense, in my opinion; the difficulty of obtaining light is great, and we cannot expect to purchase such a lot of good work and material except at a high price; . . I must confess that I cannot admire extreme complexity in furniture, and would earnestly advise your querist to patronize home producers, not only because they are English, but because they are the best.

The 1876 catalog stated that the desks' "exterior cases are constructed of black walnut, polished French veneers and rich carvings, contrasted with black and gold, according to the grade." Pine, poplar, maple, holly, and satinwood were listed as raw materials, and "the hardware is made expressly to suit the requirements of each part, and is of ornamental Berlin bronze, real solid bronze or gold enameled."[16] The hardware included a letter slot and matching name plaque on the exterior of the wings; writing flap latch; lock plates; small hinge plates on the cornice compartment door; a door handle and escutcheon (Figure 6); and six large door hinges, cast in a leafy scroll design, three to hold each wing of the desk. (Identical hinges are on the interior doors of the President Benjamin Harrison Memorial Home in Indianapolis, which was completed in 1874.)

The basic Wooton desk was made in four grades: Ordinary, Standard, Extra, and Superior. Each grade could be ordered in three sizes, varying in height from 4 feet 7½ inches to 5 feet 1½ inches; in width from 3 feet 3½ inches to 3 feet 9½ inches; and in depth from 2 feet 5½ inches to 2 feet 8 inches. Prices for the desk ranged from $90 for the smallest Ordinary to $750 for the largest Superior model.

The three better grades were furnished with a "new patent bank lock, spring letter plate and box, . . . and a full set of improved filing boxes." These filing boxes were green cardboard, the front of each having a brass ring pull and a label holder. Desks exist which have neither the name plaque nor the letter slot and with wooden knobs rather than the metal door handle. Such desks are either Ordinary grade or were made prior to 1876 when these features were new; it is also possible that the lock and letter box were optional, intended for business office rather than home office use.

Illustrations show the cabinet of the Ordinary desk devoid of elaborate detail (Figure 7); the 1875 catalog called this model "the cheapest and plainest desk we manufacture of this design. It is made, however, of good material, and possesses most of the advantages of the other grades, as to convenience, capacity and solidity. It is a good, *substantial,* desk."

The Standard model had veneered front panels and "Berlin bronze hardware," including a four-tumbler lock and two keys; it was finished in "French polish." The carcase pigeonholes acquired carved arches at the top (Figure 8). The Extra grade added incised detailing to the side panels and drawer fronts, with a more elaborate cornice (Figure 9). The Extra was described in 1875 as an elegant desk with an interior of "maple,

[16] *Illustrated Catalogue*, 1876, n.p.

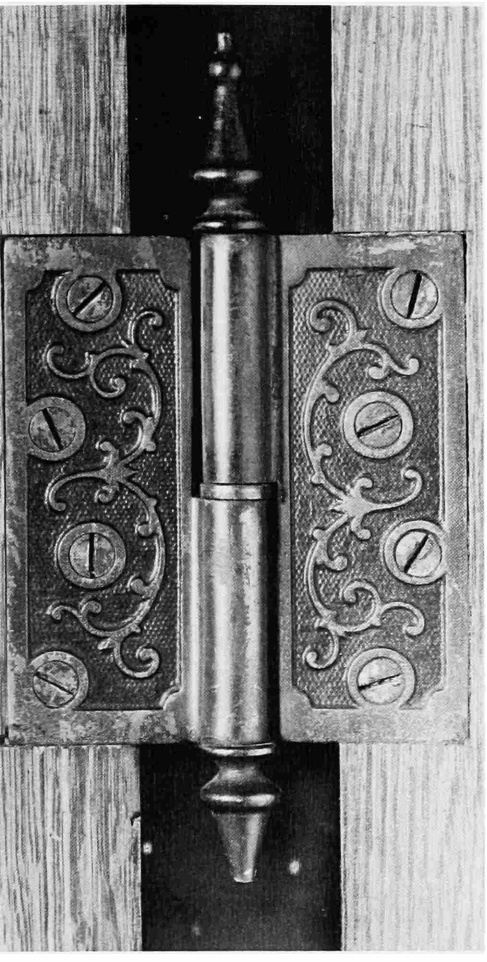

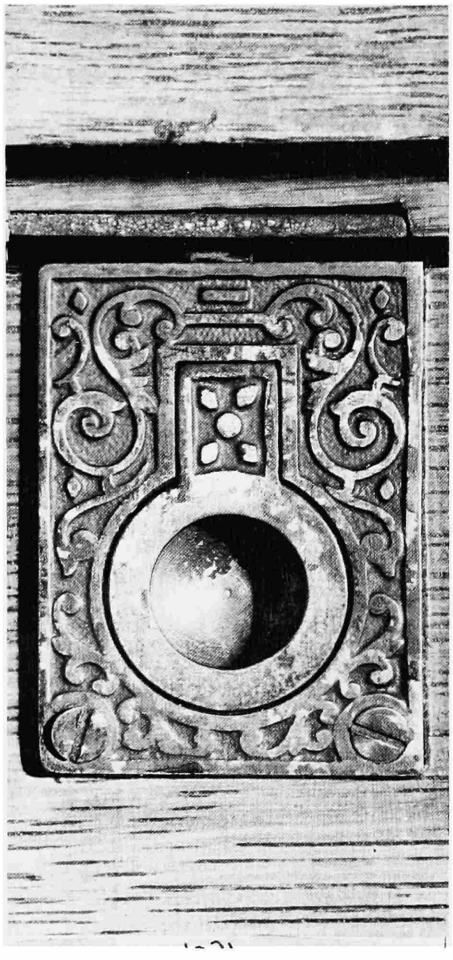



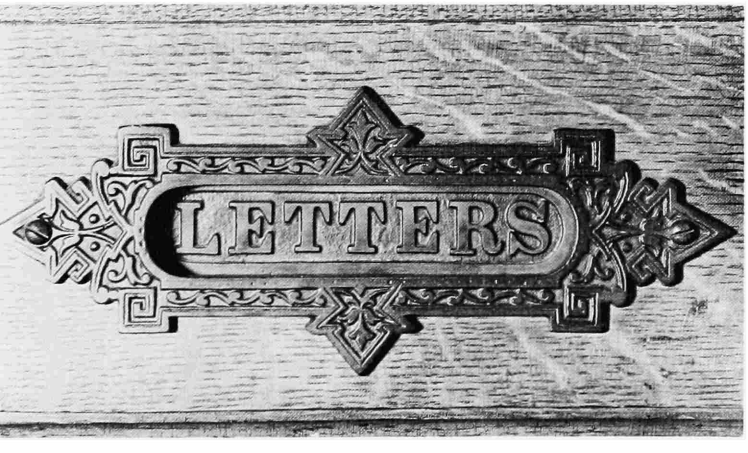


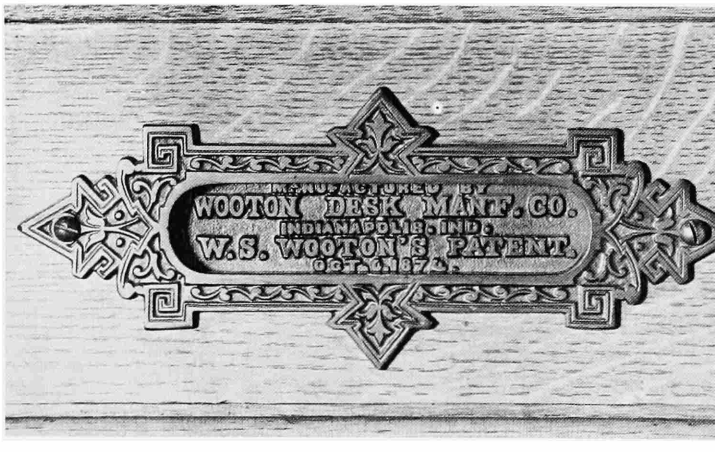


Figure 6.—Detail of hardware on Wooton Cabinet Office Secretary: (top) hinge, writing-flap latch, and door handle and escutcheon; (bottom) letter slot and name plaque.

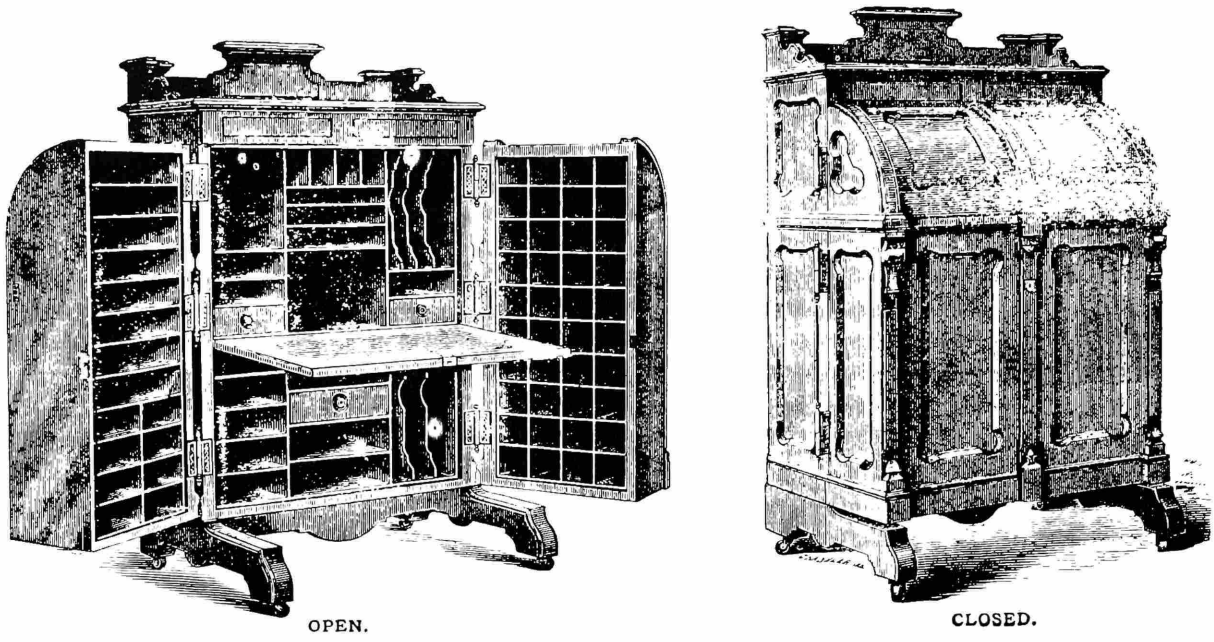


Figure 7.—ORDINARY GRADE DESK, as illustrated in the 1876 *Illustrated Catalogue of Wooton's Patent Cabinet Secretaries and Rotary Office Desks*.

Figure 8.—STANDARD GRADE DESK, presented in the *Illustrated Catalogue of Wooton's Patent Cabinet Secretaries and Rotary Office Desks*, 1876.

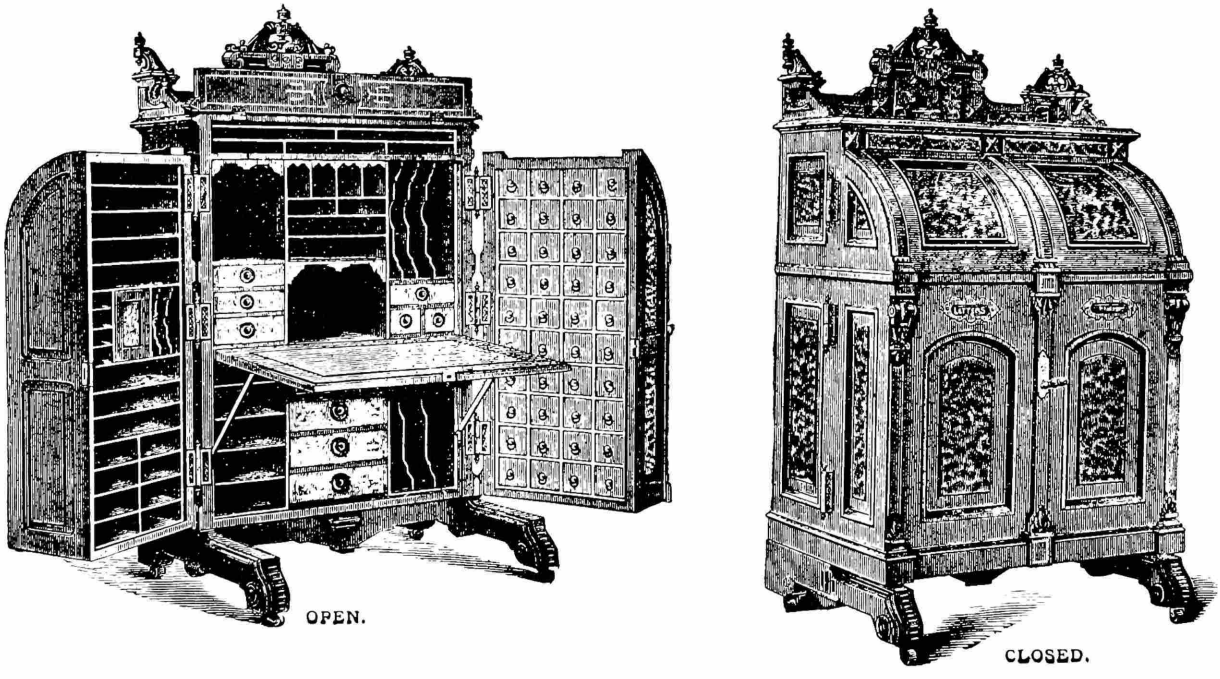

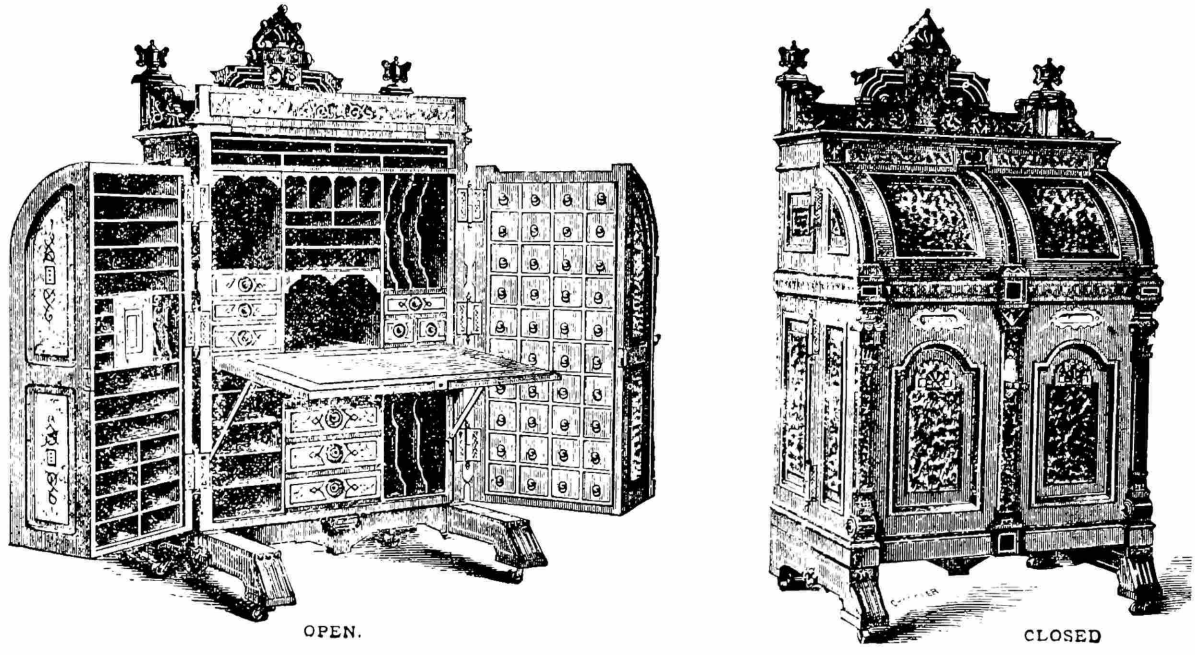


Figure 9.—EXTRA GRADE DESK, shown in the *Illustrated Catalogue of Wooton's Patent Cabinet Secretaries and Rotary Office Desks*, 1876.

Figure 10.—SUPERIOR GRADE DESK, shown in the *Illustrated Catalogue of Wooton's Patent Cabinet Secretaries and Rotary Office Desks*, 1876.

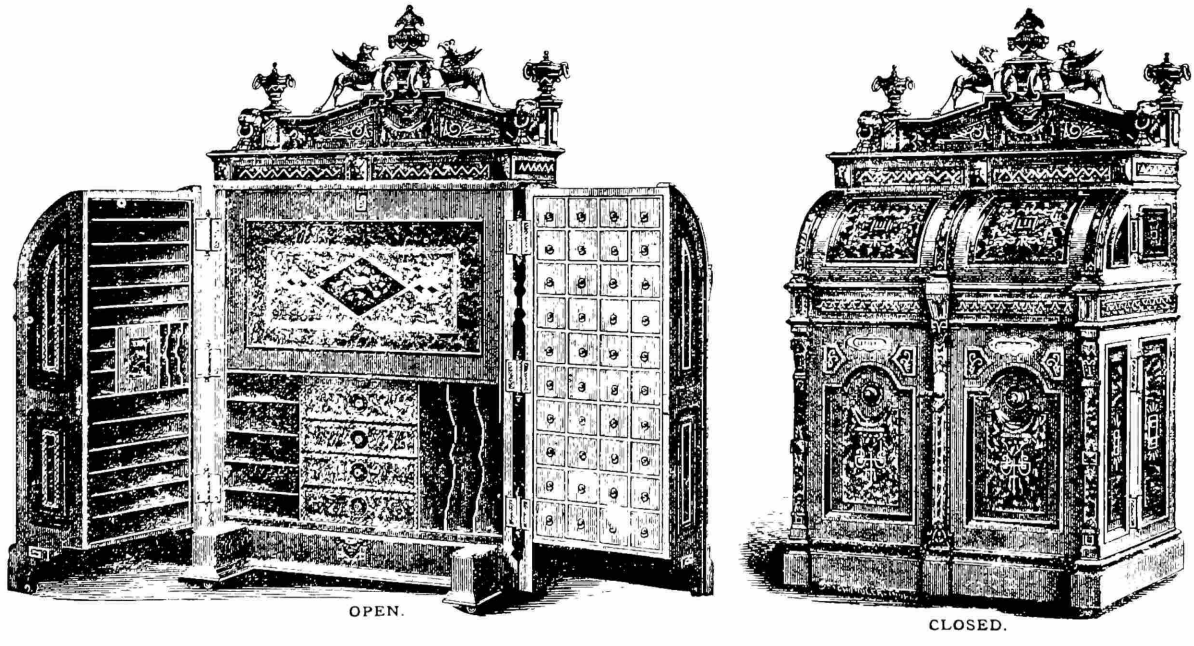

Spanish cedar or similar woods . . furnished with nickel plated or full bronzed hardware complete." The Superior version had "marquetry in splendid style," an interior of holly or satin wood, ebony trim, and "Gold Enameled Hardware entire." In the 1876 catalog its cornice was graced with a pair of urns and two griffins flanking the central pediment, as well as two lions' heads with rings in their mouths at the front corners (Figure 10). The veneered panels of these three models were typical of the Renaissance revival style, reflecting the popularity of combined light and dark surfaces in furniture of the 1870s. The broken planes formed by the heavy ornamental carving and moldings were another reflection of Victorian taste for ponderous detail.

The cornice design could be varied in several styles to suit the customer. The desk owned by John D. Rockefeller, Standard Oil magnate, had a leafy motif,[17] while the elaborate Superior model described in *Antiques*[18] had relief carving on the exterior panels and a cornice surmounted by a terrestrial globe. The desk owned by Ulysses S. Grant (eighteenth President of the United States), now on loan to the Smithsonian Institution from the White House, has an eagle on its cornice, though some of the other detailing is missing.[19]

Spencer Baird, Secretary of the Smithsonian Institution from 1878 to 1887, also owned a Wooton desk (Figures 11 and 12), which was the Standard Grade, size 2. Mr. Baird carried on a lengthy correspondence with the company, trying to have an Ordinary made that would hold a 13-inch sheet of foolscap paper. On 20 December 1875, the company wrote Baird suggesting "We should think the paper could be put in sideways & answer the same purpose." Mr. Baird

[17] Sold in London in 1963. Illustrated in *LIFE* [Magazine], *America's Arts and Skills* (New York: E.P. Dutton & Co., Inc., 1957), p. 133.

[18] Vol. 41, no. 6 (June 1942), p. 388.

[19] No documentation for this desk has been found among the Grant papers (MSS Division, Library of Congress, Washington, D.C.). It is possible that the desk was a custom-made gift from the company; no other example with an eagle is known.

Figure 11.—WOOTON DESK which Spencer Baird ordered in 1875 and used in his office during his tenure as Secretary of the Smithsonian Institution (1878–1887).



Figure 12—A VIEW of Baird's Wooton desk when closed. This desk is still in use by Smithsonian personnel.



declined to do this and in a letter of 31 December suggested changes that could be made to suit him, concluding, "If I had the desk I am sure I could get any good cabinet maker to effect the alteration." Lewis V. Horton, secretary of the Wooton Desk Company, replied, "Sorry we cannot accommodate you in this matter but we are so hurried in getting out our desks that we cannot at this time undertake any changes in interior arrangement of desks." Somehow the difficulty was resolved, for on 24 January 1876, Mr. Horton wrote his Washington dealer, H. O. Towles, "Your favor with Baird order at hand. Desk will be put through at once—& will be shipped in about two weeks." [20] This desk was exhibited in the United States pavilion at the Canadian Centennial Exposition in Montreal in 1967.

In addition to the Grant and Baird desks, there is a third Wooton desk at the Smithsonian, that of Doctor Edward Hofma (1859–1936), physician, banker, and state senator from Grand Haven, Michigan. This desk (Figures 13 and 14), although it has had repairs to the lower carcase and lower left wing, retains its original green file boxes. The cabinet and cornice remind one of parlor organ designs of the period. This is probably an Ordinary model.

[20] Spencer Baird papers, MSS, Smithsonian Institution Archives.

Figure 13.—DESK originally owned by Dr. Edward Hofma, physician, banker, and state senator from Grand Haven, Michigan. The panels beneath the writing flap and in the lower right wing are not original.

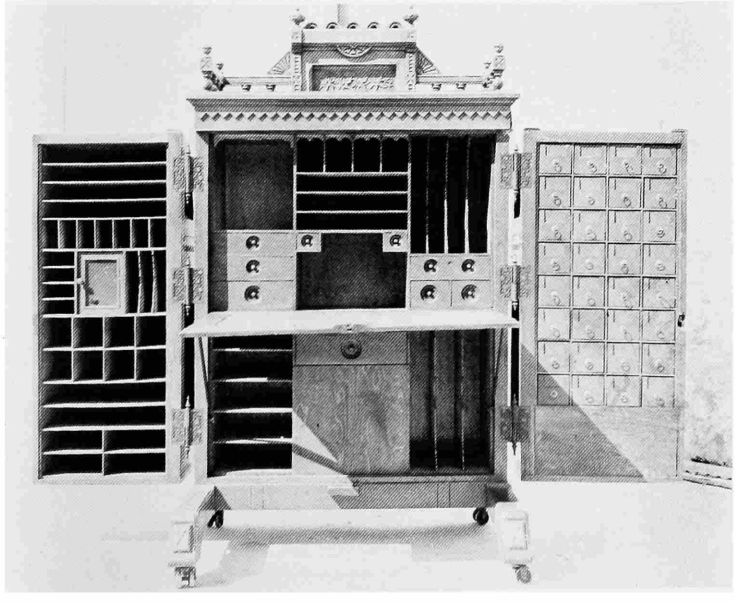

Wooton desks were owned also by such dignitaries as G. B. Grinnell, founder of Iowa's Grinnell College; Sidney Lanier, poet; Joseph Pulitzer and Charles Scribner, publishers; Jay Gould, railroad magnate; and Governor Larrabee of Iowa, not to mention other prominent men across the country whose names and letters of testimonial Wooton proudly included in his catalogs (Appendix VII). One such testimonial, in the 1875 catalog, stated:

> *Office of Appleton's Journal, 549 and 551 Broadway, New York, Dec. 12, 1874.*
>
> Dear Sirs—The key came to hand by mail on the 7th inst. I am more than pleased with my Secretary, and in it my expectations were more than realized. It is the most convenient, compact and beautiful—in a word, the *most perfect*—office desk ever made, at least as far as my observation goes. For more than a year past I have been looking for something that would answer a felt want by way of desk for my papers (which are numerous), but failed till I saw your Secretary, when with "Archimedes" I exclaimed "Eureka."
>
> HENRY W. QUIN.

Figure 14.—A VIEW of Dr. Hofma's Wooton desk when closed. It is now in the Smithsonian Institution (USNM 60.60).



Today Wooton desks are in museum and private collections.[21] As noted in Appendix VII, Wooton desks were used by lawyers, bankers, railroad men, newspaper editors, and educators, in addition to the county officials for whom they were first recommended.

In an effort to scale down the mass of the usual Wooton desk to a more feminine size, the Wooton Desk Company also made a Ladies' Secretary. It was similar to the basic Wooton desk but slimmer, with a shelf across the top cornice and a monogram on the exterior of the writing flap. No letter slot or name plaque was shown (Figure 15). The author knows of no extant examples.

Another major style was the Rotary Desk which came in twelve styles, including a single or double pedestal, with flat or slanted writing surfaces; flat top, called "The Lawyer's Own" (Figure 16); large double-pedestal slant top in two heights for office use; roll, or cylinder tops (Figure 17); a massive stand-up variety of cashier's desk (Figure 5); and a double-pedestal "counting house" desk where the writing surface could be raised. Rotary Desks were made in only two grades, Standard and Extra, with prices ranging from $30 to $225. Dimensions for the "Lawyer's Own" were: length of desk 5 feet; width 2 feet 7 inches; height 2 feet 7 inches, length of spread of rotating cases 2 feet 5 inches; height of cases 1 foot 9 inches; depth of cases 12 inches; pigeonholes 4¼ by 4⅜ inches. The company noted "We also furnish these Desks in Ebony and Gilt finish, when desired. The whole exterior of these is ebonized and filled in with gold stripings and ornamentation. These are very showy" (Figure 17).[22]

[21] For example: Brooklyn Museum; Fort Wayne Historical Society (Allen County, Indiana); Henry Ford Museum; Johns Hopkins University (Lanier desk); Pulitzer School of Journalism (Pulitzer desk); Grinnell College (Grinnell desk); Lyndhurst-on-Hudson (Gould desk). Over 30 desks have been brought to the author's attention.

[22] From promotional material in the Spencer Baird papers (op. cit., footnote 20) and an advertising brochure of D. B. Waggener & Co. (Wooton's Philadelphia dealers), ca. 1876, copy in the Smithsonian Library.

Figure 15.—WOOTON'S "LADIES' SECRETARY," as shown in the 1876 *Illustrated Catalogue*. The author knows of no extant examples.

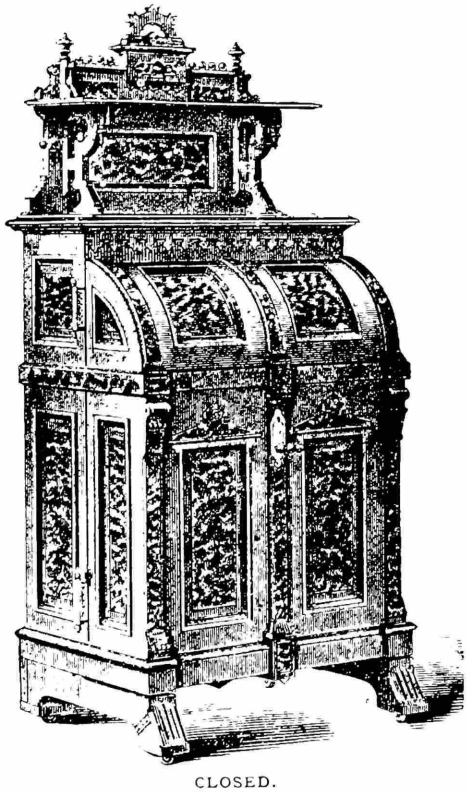

CLOSED.

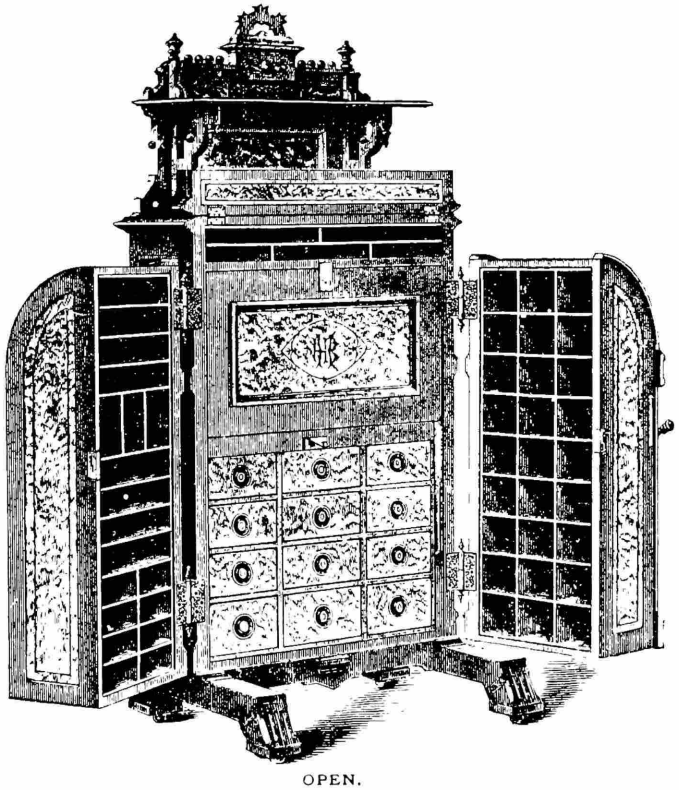

OPEN.

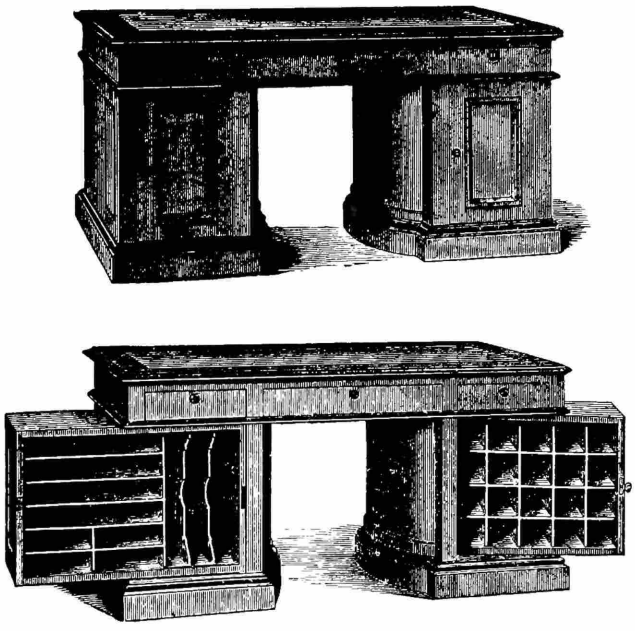

Figure 16.—"THE LAWYER'S OWN," a double-pier Rotary Desk, shown here in the standard grade as illustrated in the Wooton Desk Company's 1876 *Illustrated Catalogue*.

The Rotary Desks were based on patent number 172,362, shown in Figure 3, which provided for "hinged or pivoted cases . located in the wings or ends of the desk" so that "the occupant of the desk can, from his seat, readily swing open the chests or cases, presenting them to him in a position accessible to their contents . . ." (Appendix IV). This was Mr. Wooton's answer to the "TRUE BRITON."

The 1876 catalog warned against patent infringements, and one wonders if that word of caution was unheeded by firms in Indianapolis and Richmond, Indiana; Cincinnati, Ohio; and Preston, Ontario, that proceeded with Rotary Desks and variations on the basic Wooton theme. Perhaps Wooton sold his patent rights, or possibly the desks of these firms were sufficiently different to be innocent of patent violations. One lawsuit over the Rotary Desk design did occur in England in May 1876 between Wooton's representatives and the makers of the Royd desk; the court ruled in favor of Wooton.[23]

William Wooton's general manager in 1876 was Joseph A. Moore, a man prominent in local business and real estate circles, who in 1878 took out a patent

[23] *The Furniture Gazette* (London), 9 December 1876, p. 361.

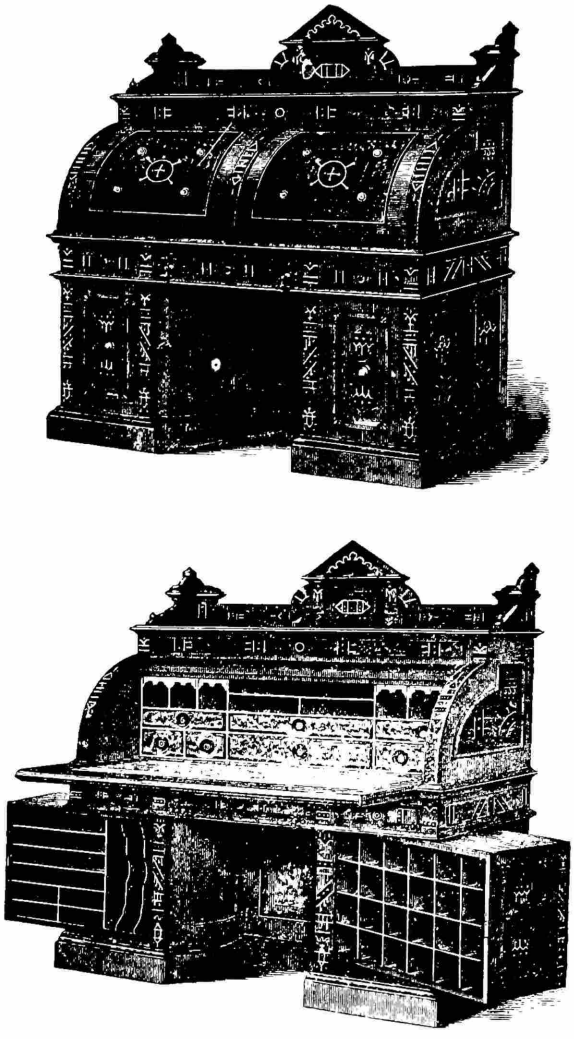

Figure 17.—THE EXTRA GRADE ROTARY DESK with cylinder top, possibly the desk the company had in mind when it advertised "These are very showy" (page 12). From the 1876 *Illustrated Catalogue*.

for a "Cabinet desk of two wings pivoted or hinged to a common shaft upon which wings rotate in opening or closing desk [24] (Figure 18, Appendix V). This desk was patented for Moore in Great Britain by W. R. Lake on 14 December 1877. By 1879 Moore had filed articles of association for the Moore Combination Desk Company in Indianapolis, stating that "The object of the formation of said Company shall be the

[24] U.S. Patent Office, Specifications and Drawings, No. 199,089 (8 January 1878).

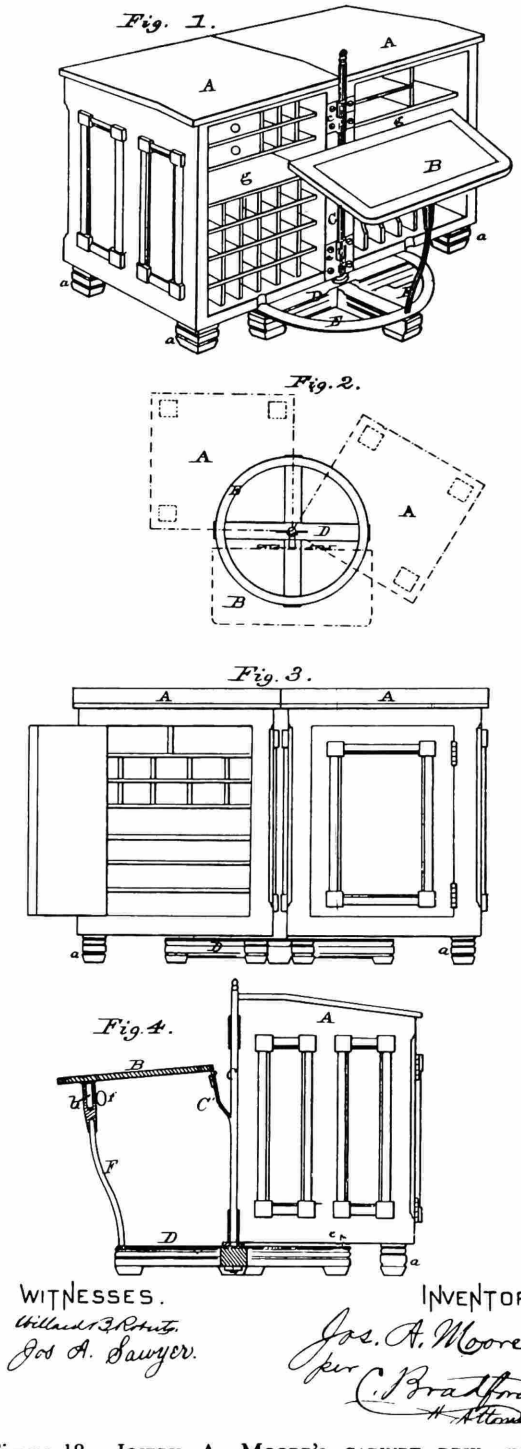


Figure 18.—Joseph A. Moore's cabinet desk, patent number 199,089, issued 8 January 1878. This patent provided "A cabinet-desk consisting of two wings, pivoted or hinged to a common shaft, upon which the wings rotate in opening or closing the desk."

manufacture and Sale of office, library, school and other desks" [25] (Appendix X). According to the 1880 industrial census, Moore's company had 25 employees, one boiler, and one 32-horsepower steam engine and was making office furniture worth $25,000. By 1882 Moore held two other patents (Figures 19 and 20) for desks which were definitely derivative of the Wooton.

The Moore desks opened at the side and were in two parts, rather than opening in the middle and being in three parts. But the style, size, and basic idea of a side-hinged opening desk with many pigeonholes and shelves, writing flap, drawers, and lock were the

[25] Corporation Records, Office of the Secretary of State, Indiana (MSS, Indiana Archives).

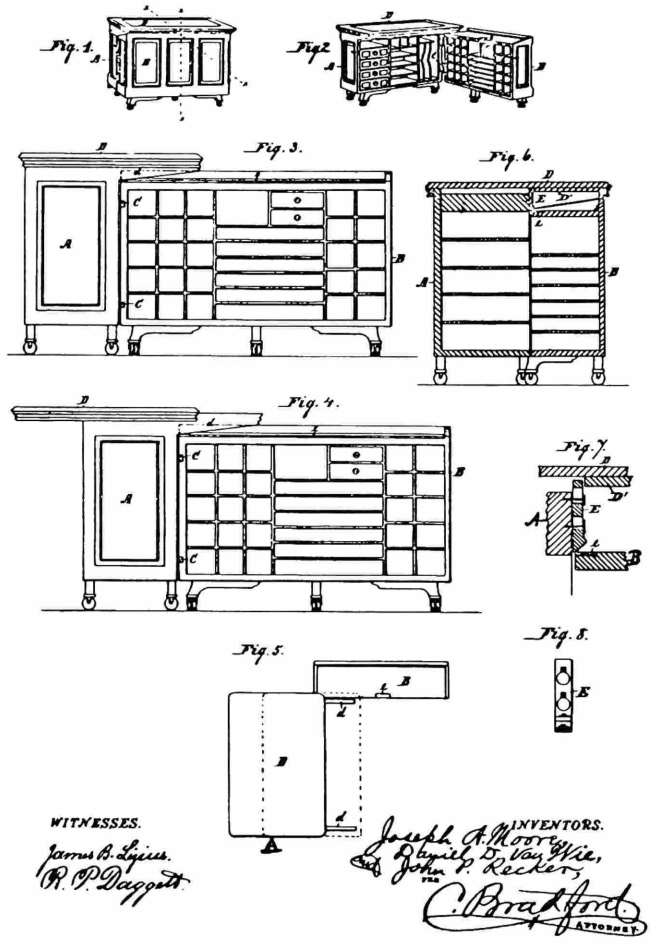


Figure 19.—Patent number 260,703 for desk, issued to Joseph A. Moore, 4 July 1882.

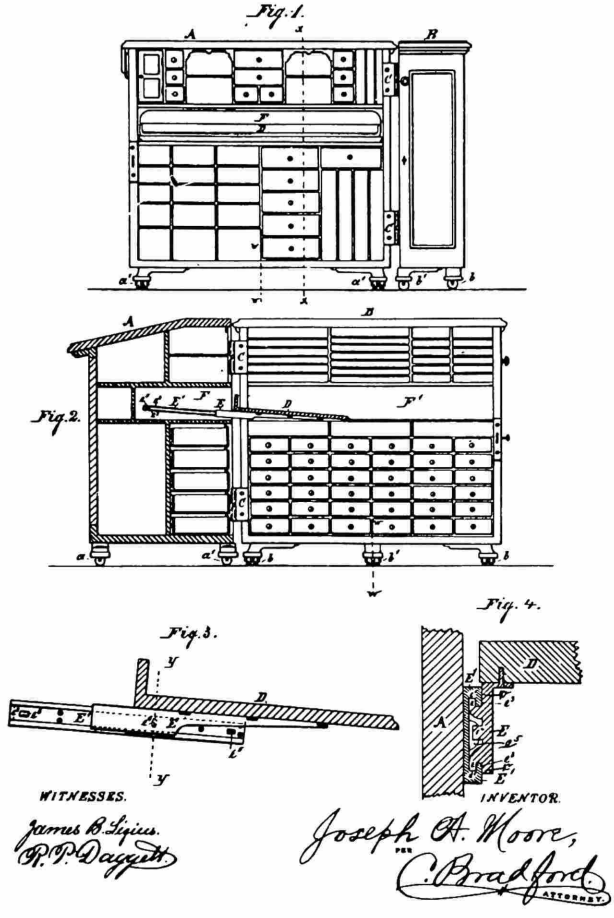


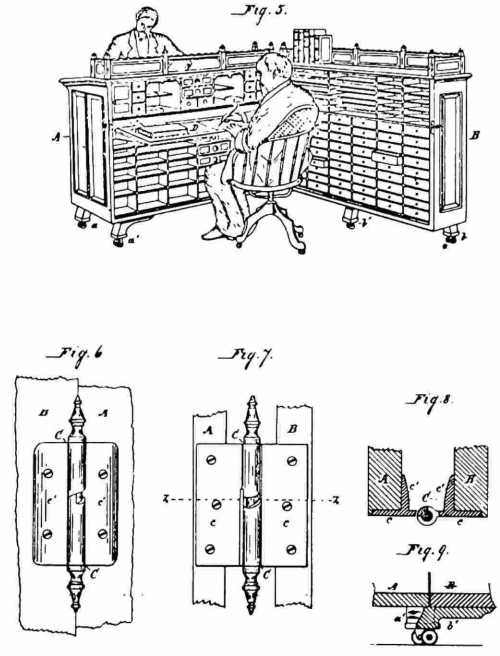


Figure 20.—PATENT NUMBER 263,055 for cabinet desk, issued to Joseph A. Moore, 22 August 1882.

same. Benjamin Harrison had one of these desks in his law office in Indianapolis (Figure 21). Examination shows the cardboard file boxes in the pigeonholes of the Harrison desk to be identical to those in desks made by the Wooton Desk Company that are in the Smithsonian collections; the drawer construction is similar, although the hardware and general effect of the cabinetwork are less handsome.

In the 1876 Indianapolis City Directory, the Wooton Desk Company advertised its product as "The King of Desks' (Frontispiece and Figure 22). In 1882 the Moore Combination Desk Company included among the 17 desks it exhibited at the Indiana State Fair "The Office Queen with a case of drawers and pigeon holes in the folding doors, and the same in the body of the desk." [26] An 1883 illustration of the four-story Moore factory was included in a publication of the Indianapolis Board of Trade, together with the comment that the company's sales in 1882 exceeded $100,000, the firm employed 60 workmen, and its products were being shipped to Brazil, South America, and Europe (where they were probably competing in the Wooton market).[27] Wooton had a dealer in Rio de Janeiro in addition to his European outlets (Appendix II). The Moore Combination Desk Company continued in business until 1894, when it was last listed in the Indianapolis City Directory as the "Emerson-Moore Desk Co." (Appendix X).

On 6 February 1877, Henry H. Wiggers of Cincinnati patented another variety of the Wooton-type desk. The patent specification for this desk or secretary stipulated that it was "provided with a pair of hinged covers coupled to a sliding member in such a manner that the advancement of said slide causes the

[26] *32nd Annual Report of the Indiana State Board of Agriculture* (Indianapolis, 1882). This desk may have been in the style of the Benjamin Harrison desk, or it may have been in the cut-cornered style of the Fallows desk (illustrated in *Wisconsin Magazine of History*, vol. 35, no. 4 [Summer, 1952], p. 276), which is labeled "Moore's cabinet desk, Indianapolis,Indiana, Patented Jan. 8, 1878."

[27] "Resources and Industries of Indiana" (part 4 of *Manufacturing and Mercantile Resources of Indianapolis, Indiana*, Indianapolis, 1883), p. 454.

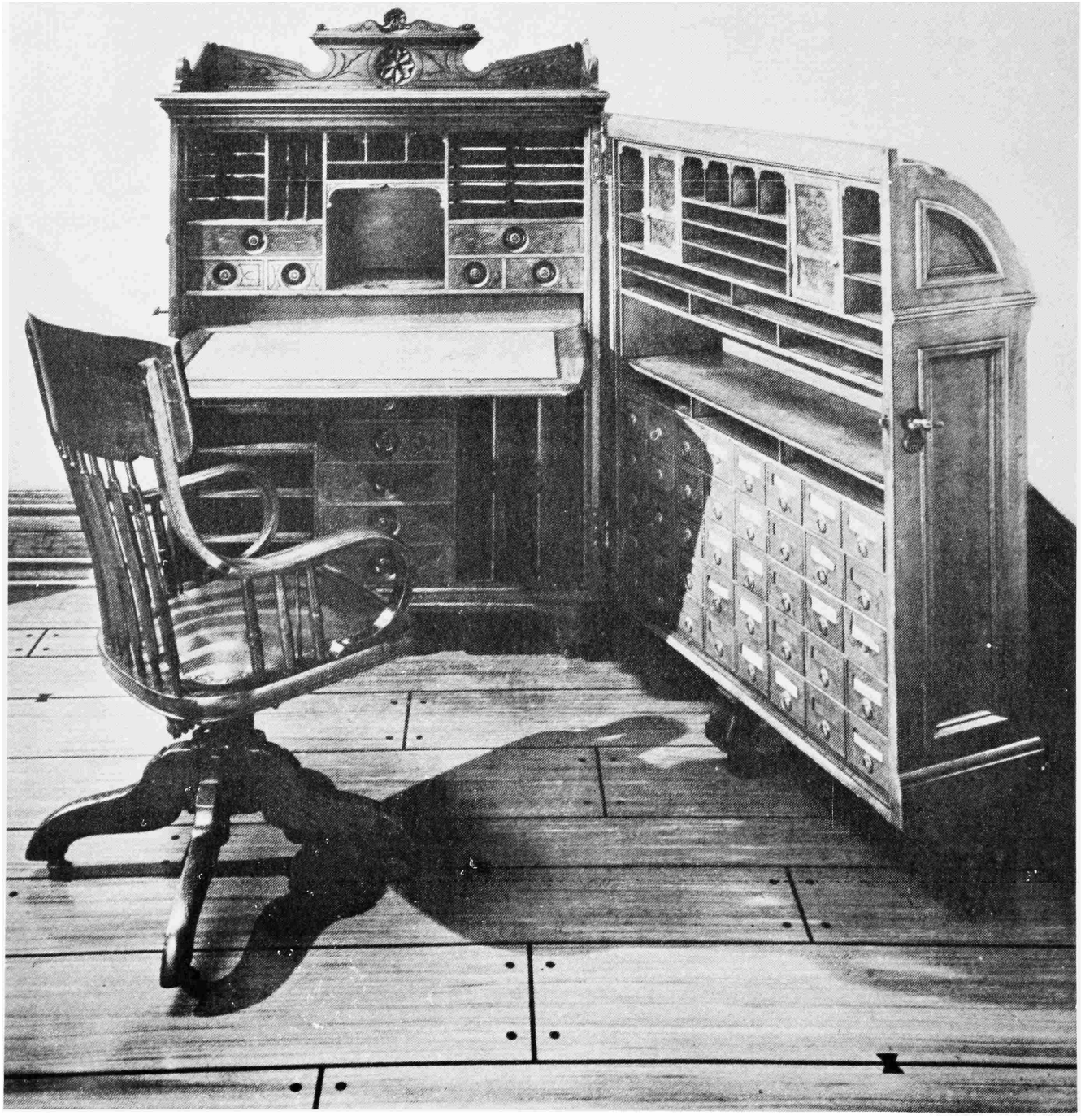

Figure 21.—Desk probably made by the Moore Combination Desk Company of Indianapolis, now in the President Benjamin Harrison Memorial Home, Indianapolis. Height of carcase 48 inches; carcase width 42 inches; overall depth 14¾ inches; door depth 11¾ inches. Moore's patent indicated that the standing desk feature "will probably be left off in some instances." (Photograph courtesy of the President Benjamin Harrison Memorial Home.)

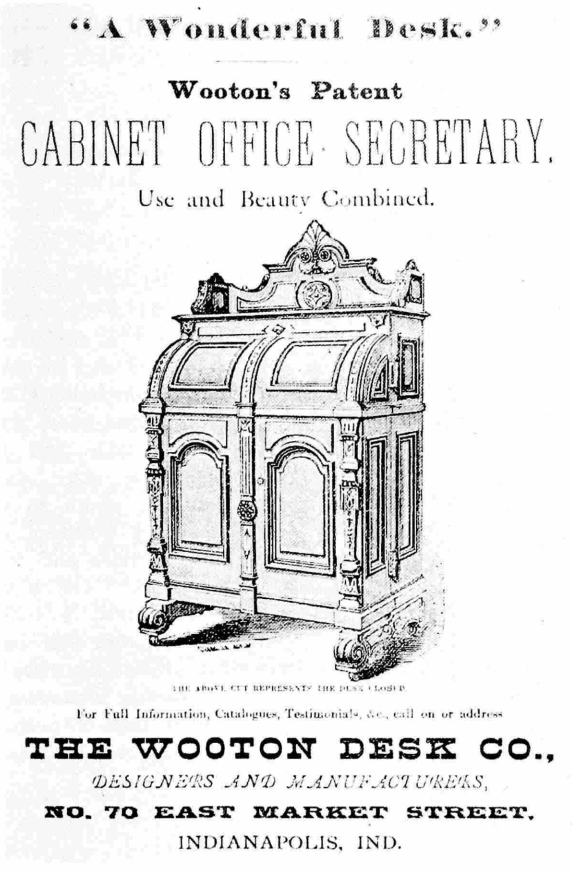


Figure 22.—Advertisement from *Indianapolis City Directory*, 1876. (Photograph from the Library of Congress.)

covers to open to the right and left, respectively, while the retraction of the slide restores them to their normal or closed position." An example of the Wiggers desk (Figure 23) is in the Heinz House at Greenfield Village, Dearborn, Michigan; it is a tall secretary with a glass door that covers shelves in the upper portion. A center section with Wooton-like wings opens out from the middle, and the lower section contains cupboard space. It might be termed an automated abbreviated Wooton type.[28]

Beginning in 1880, the year William Wooton moved to Danville, Indiana, the Wooton Desk Company

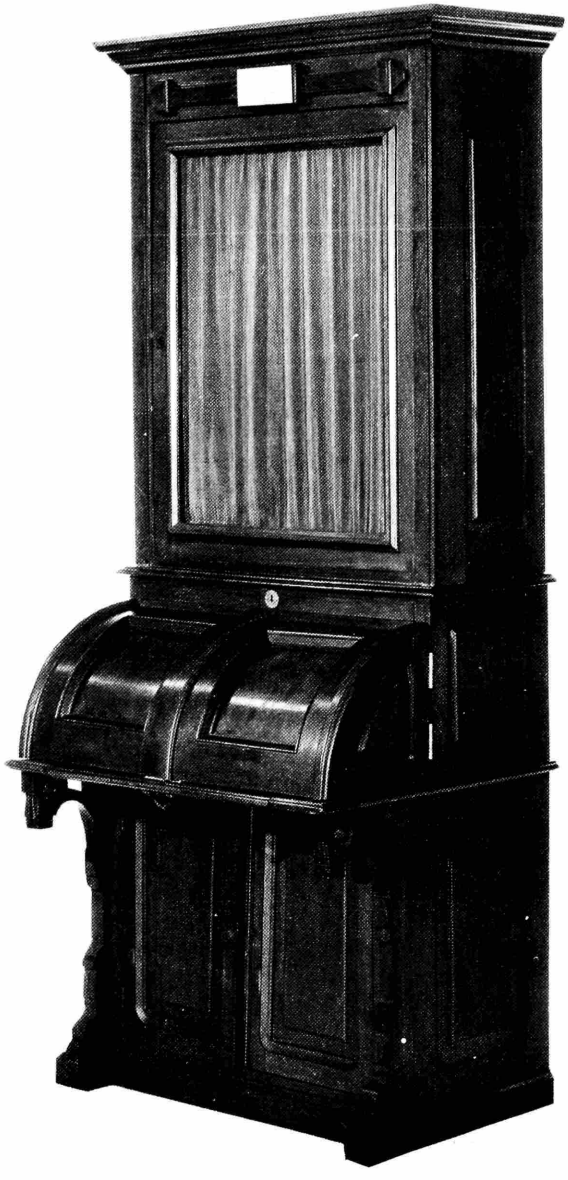

Figure 23.—Desk patented by Henry H. Wiggers of Cincinnati, Ohio, 6 February 1877, now in the Heinz House, Greenfield Village, Dearborn, Michigan.

was listed as the Wooton Desk Manufacturing Company. On 4 October 1881, William Wooton was granted patent number 247,979 for a cabinet desk (Figure 24, Appendix VI), with half interest given to A. J. Kempleman, who in 1870 was an officer of George H. Grant and Company of Richmond, Indiana.

[28] Wiggers also adapted this design for other desks. A desk in the Campbell House Museum in St. Louis, Missouri, marked "PAT. PEND./H. H. WIGGERS/KEARNEY & WIGGERS/ MANUFACTURERS CIN'TI. 0," is similar to that shown in Figure 23, but the wings have a slant front rather than a Wooton curve.

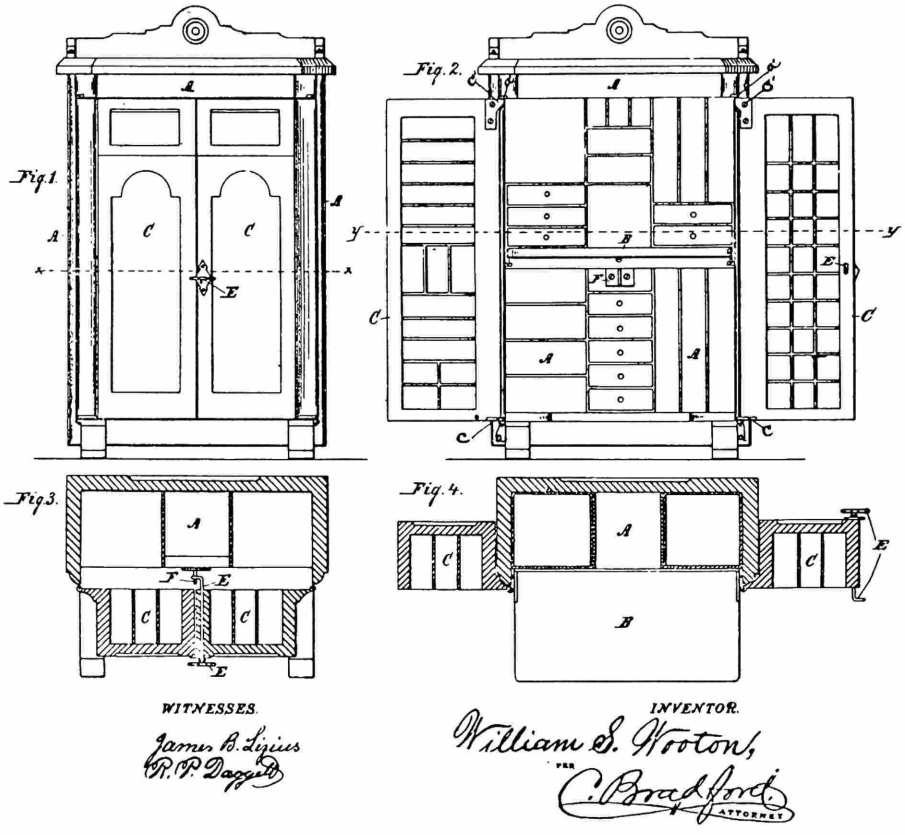


Figure 24.—PATENT NUMBER 247,979, William Wooton's last desk patent, submitted after his move to Danville, Indiana. This modification made "the writing table and the pigeonhole space about equal in width to the combined width of the door portions and their extensions." The hinges were planned to enable the wings to fold back flat against the sides of the carcase without any wasted space (Appendix VI).

Figure 25.—ADVERTISEMENT in *Frank Leslie's Illustrated Newspaper* (27 June 1885), p. 312. (Photograph from the Library of Congress.)

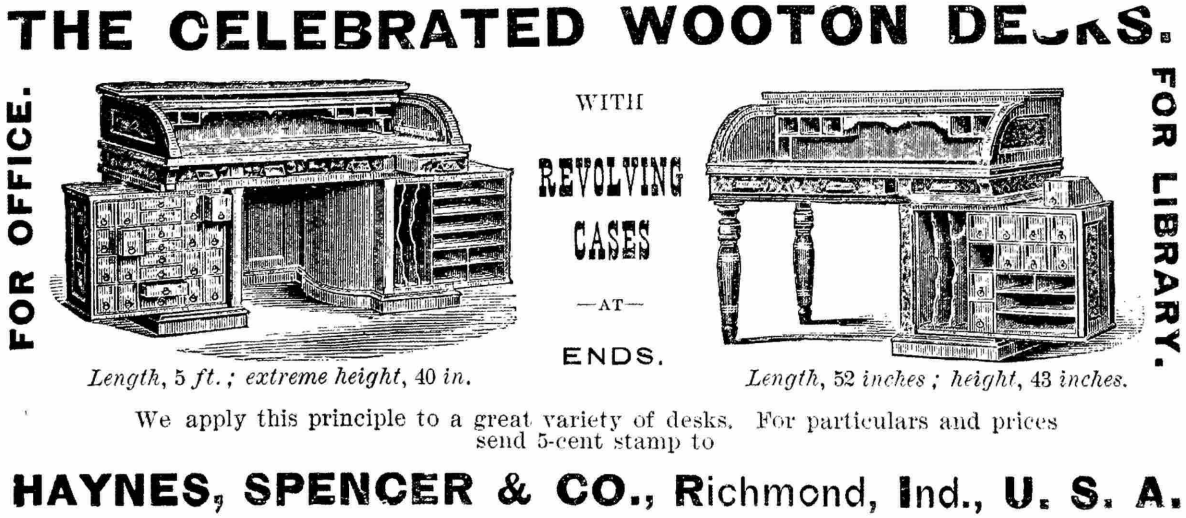

No examples of this desk have come to the author's attention, and it is speculative whether the desks were made in Danville, Richmond, or Indianapolis. The Wooton Desk Manufacturing Company faded from the scene about 1884. Indiana historian B. R. Sulgrove wrote in that year, "The Wooten Desk Company, who make a specialty of fine writing and business desks, formerly had a factory on the Bee Line Road [Bellefontaine Railroad], near the city." [29] The last advertisement found for the Wooton desk made by the Wooton Desk Manufacturing Company appeared on 30 August 1884, in *Frank Leslie's Illustrated Newspaper*. The Wooton firm must have ceased operation sometime between August 1884 and February 1885, for an identical advertisement appeared in the same paper on 14 February 1885, listing the manufacturer as Haynes, Spencer and Company, Richmond, Indiana (Figure 25). This firm descended from George H. Grant Company, with which William Wooton was associated immediately before he began his own company in Indianapolis. The 1880 industrial census listed 125 employees in the company, producing furniture valued at $130,000. The last listing for Haynes, Spencer and Company, which later became the Richmond Church, Hall and School Furniture Company, appeared in the 1892 Richmond City Directory, but the firm was reported as having moved to Muncie, Indiana, about 1901 (Appendix VIII).[30] No advertisements of Wooton desks by this company were found after 1885.

Exactly what happened to the original Wooton Company itself is unknown. A series of bank and business failures in Indianapolis in the fall of 1884 caused *The Trade Bureau,* a national furniture trade journal, to state on 24 January 1885, that "during the year just past the furniture trade in [Indianapolis] and adjacent cities has not yielded large dividends, nor has it been over-flourishing." B. R. Sulgrove noted in 1884 that "The [Indianapolis] trade in black walnut is kept up, but not so extensively as formerly. The walnut woods of Indiana are practically exhausted." [31] No mention was made in the city newspapers of the demise of the firm, but it seems probable that it was a victim of local economic conditions and vigorous competition and may have suffered from the departure of Mr. Wooton.

[29] B. R. SULGROVE, *History of Indianapolis and Marion County, Indiana* (Philadelphia: L. H. Everts Co., 1884), p. 456.

[30] FOX, op. cit. (footnote 4).

[31] SULGROVE, op. cit. (footnote 29).

Figure 26.—ADVERTISEMENT in *The Canadian Manufacturer* (15 March 1895), p. 235. (Photograph from the Library of Congress.)

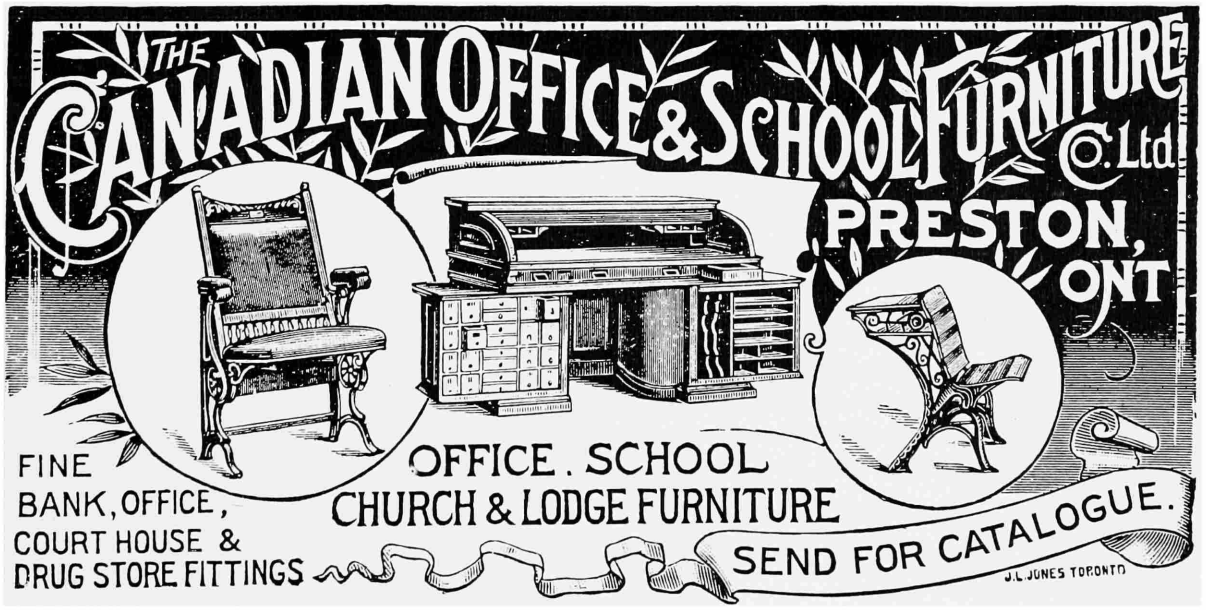

The year 1885 may have been the end of the Wooton Desk Manufacturing Company, but not the end of the Wooton desk. In England, *The Graphic* carried an advertisement in May 1888 for "the Wooton Patent Cabinet Secretaire," being sold by Francis and James Smith, Cabinet Makers, 45 Gordon Street, Glasgow. The Smiths took out the British patent for Wooton's desk and advertised as dealers for the Wooton Desk Company as early as 1 July 1876, in *The Queen* (Figure 4). Whether they were selling leftover models, new stock made by a new company in the United States, or a product of their own manufacture is unclear.

In 1889 W. Stahlschmidt and Company, of Preston, Ontario, advertised their "Rotary Desk No. 50" in *The Canadian Manufacturer*. It was illustrated as a flat-top, two-pedestal rotating desk; in 1895 the Canadian Office and School Furniture Company, Ltd., of Preston, Ontario (successor to the Stahlschmidt company), advertised a rolltop, two-pedestal rotating desk,[32] which it advertised until January 1897 (Figure 26).

The Wooton desk story continues in the records of the Indianapolis Cabinet Company, an outgrowth of the Wheeler and Wilson Sewing Machine Company of Bridgeport, Connecticut, established in Indianapolis in 1862 for the manufacture of tables and cabinets for their machines.[33] In 1886 Francis A. Coffin, one of the directors of the Indianapolis Cabinet Company, patented two cabinet desks as well as a "lock for rotating desk" (patent 344,943). Specifications for the desk —patent numbers 338,039 and 338,632 (Figure 27) —showed a double-pedestal desk with rolltop, which when rolled up automatically caused two Wooton-type wings to open from the center of the upper portion of the desk. Coffin's 1887 patent (Figure 28) completed this cycle of flexible desks with a push-pull rather than a rotary plan. By 1890 the Indianapolis Cabinet Company was called "The largest desk manufactory in the world" (Appendix IX).[34]

When a new company known as the Wooton Office Desk Company was incorporated in Indianapolis in 1892,[35] two of the three persons signing the articles

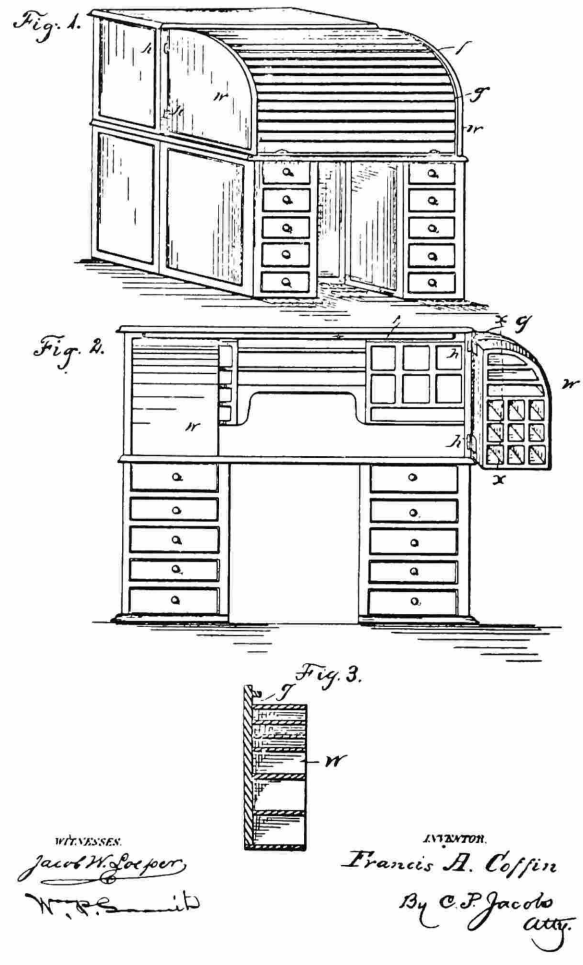


Figure 27.—PATENT NUMBER 338,632, issued to Francis A. Coffin, 23 March 1886, for a cabinet desk provided with "wings hinged to the top on each side, adapted to be opened right and left, and to be closed by means of a flexible curtain coming down over the face of both wings . ."

of incorporation were also members of the board of the Indianapolis Cabinet Company; one of these was Francis A. Coffin. On 26 October 1894, the "patent rights, good will and other similar property of the Wooton Desk Company" were sold to Robert [?John] Dickson for $1,500.[36] By 1896 Lewis V. Horton (formerly secretary and later manager of the original Wooton Desk Company) was listed as the secretary of the new Wooton Office Desk Company, whose location was the same as that of the Indianapolis Cabinet Company

[32] *The Canadian Manufacturer*, 21 June 1895, p. 499.

[33] *Manufacturing and Mercantile Resources*, op. cit. (footnote 27), p. 418.

[34] J. R. ROBINSON, *Picturesque Indianapolis* (Indianapolis: J. R. Robinson, 1890), n.p.

[35] Corporation Records, Office of the Secretary of State, Indiana (MSS, Indiana Archives).

[36] *The Furniture Trade Review*, vol. 15, no. 1, (10 November 1894), p. 49.

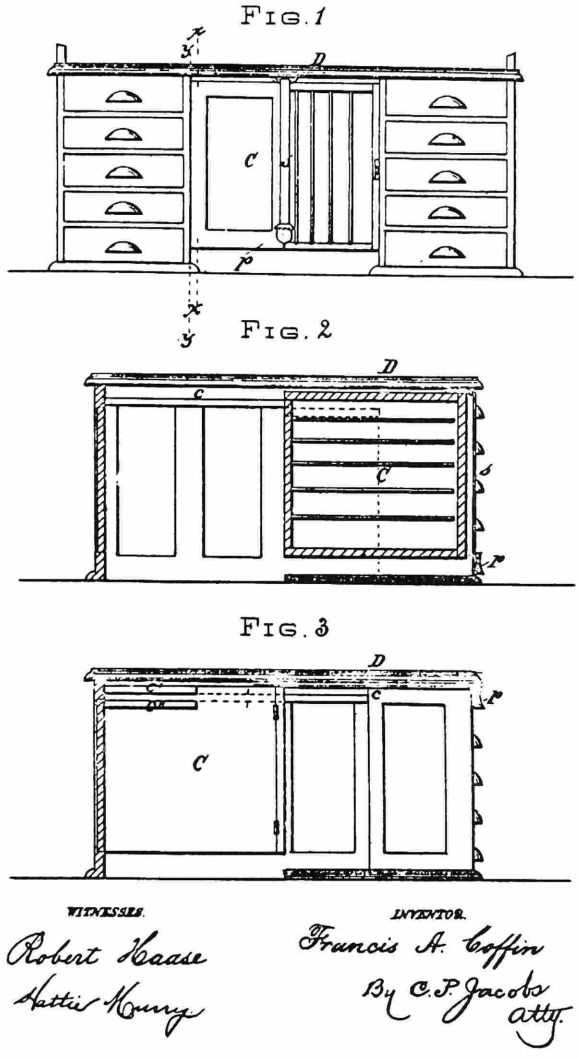


Figure 28.—FRANCIS A. COFFIN'S PATENT 356,449, dated 25 January 1887, for a writing desk with a "cabinet under the table which is adapted to be pulled out so as to be flush with the front of the desk or to be pushed back out of the way."

on the southeast corner of Malott and Columbia Avenues. So it appears that the Indianapolis Cabinet Company controlled the new Wooton firm from 1892 until 1898, after which time no further mention of Wooton desk manufacture has been found.

## Conclusions

In 1876 when the Wooton Desk Company of Indianapolis, Indiana, was enjoying unusual success, it issued a statement proclaiming that "For the past fifty years office furniture, and especially desks, have been constructed after old models, without any seeming study for improvement. These, however, are of entirely new designs—attracting much attention, rendering complete satisfaction, and rapidly coming into general use." The company went on to state, "The unprecedented sale of these celebrated Desks in this and other countries, leads us to believe that they will produce a complete revolution in Office Desks." [37]

And a revolution of sorts they were. Although desks combining pigeonholes and shelves with writing surfaces had been made in America since the colonial period, most had only a few pigeonholes. After the Revolutionary War, desks had either a hinged slant front, a rolltop, or tambour sliding doors to cover their pigeonholes. The arched carving over the main pigeonholes of the more elaborate Wooton models also had precedents in Federal furniture. While the exterior of the Wooton desk was curved to resemble the customary outline of a mid-century rolltop desk, the placement of the large number of pigeonholes and shelves in full-front doors which could be opened to reveal even more pigeonholes and shelves in the carcase of the desk was extraordinary. To add to this engineering feat the ambitious proportions and combinations of design common to Victorian taste was to produce a durable desk which appealed to many businessmen in the third quarter of the nineteenth century.

Sources for the basic Wooton desk design are obscure. Perhaps Mr. Wooton was only trying to combine in a single desk many of the elements of other desks, but on a larger scale. Perhaps he had seen a piece like a "Dutch inlaid mahogany *grande secrétaire*," [38] a truly massive structure with doors opening to reveal dozens of small rectangular drawers. (This masterpiece provided a chair, inlaid to match the desk exterior, to fit under the writing flap so that when the doors were closed the desk had a solid, elaborately inlaid front, beneath a large mirror with clock, the whole surmounted by a heavy cornice and an eagle pediment.) Or the Wooton secretary may have been merely the natural descendant of Mr. Wooton's folding school desk of 1868, an evolutionary development by an inventive mind in an inventive era.

The Wooton desk is archetypical of the Victorian

[37] *Illustrated Catalogue*, 1876, op. cit. (footnote 15).

[38] F. LEWIS HINCKLEY, *Directory of Historic Cabinet Woods* (New York: Crown Publishers, Inc., 1960), p. 125.

desire for flexibility in furniture,[39] reflecting America's post-Civil War mania for efficiency, order, and gadgetry. This is a writing desk, filing cabinet, letter box, and safe all in one. It is an action desk: it rolls, it locks, the wings rotate, file boxes extend, the writing flap drops, the upper door opens upward, the letter flap snaps shut. It is durable, and even today it is enjoyable to use. Apparently the only long-range problem is that if the wings are left open for an extended time their weight may produce sagging, causing the wings to rub against the bracket feet and making locking difficult. (This difficulty Wooton had sought to eliminate by his 1881 patent; see Appendix VI.)

The Wooton desk came into being in an era when one man, with one large desk, could operate a large business himself and could keep all of his records in one file. Until its invention, most desks seemed simple by comparison. With the increasing business activity generated by the industrial revolution, increased desk and file capacity was required. By the 1890s, with typewriters and duplicating machines producing more records, business seemed to have outgrown the Wooton desk and to have reverted to smaller desks used with auxiliary filing cabinets for which a growing number of patents were issued during this decade.

This desk also echoes the middle-class desire of the 1870s and 1880s for solidity, stability, and massive proportion. Sitting at a Wooton desk, one feels the same security and well-being one feels in the center of a sturdy Victorian house, with the encircling wings forming a safe hemisphere, a bastion in which to order one's tidy realm in a fluctuating world.

## *William S. Wooton*

The Wooton story is one of a man who had a good idea at the appropriate time—and the ability to capitalize on it. Although William Wooton started the Wooton desk on its way and gave it his name, he was probably not the major figure controlling the Wooton Company.

Little is known of his early years, but prior to 1867 he lived near Terre Haute, Indiana, and was a member of the Honey Creek Monthly Meeting of the Friends Church. In June 1867 he moved to Richmond, Indiana, where he remained until 1870. He, his wife Docia, and their seven children (two of whom died in infancy) lived in Indianapolis from that date until 1880.[40] While in Indianapolis, Mr. Wooton was active in the Young Men's Christian Association, and his activities were mentioned frequently in the local newspapers. Among these was a note in the *Indianapolis Journal* of 1 March 1875, regarding services held at the Friends Church: ". the meeting then closed by the Rev. W. Wooton singing the well-known hymn, 'Almost persuaded' in a very impressive manner."

In 1875 Mr. Wooton was one of the "corporaters" of the Greene County (Indiana) Iron Works in Worthington.[41] Both he and his wife were ministers of the Friends Church, and Mrs. Wooton was on the board of lady managers of the Colored Orphan Asylum in 1875.[42] After 1876 Mr. Wooton was no longer listed among the officers of the Wooton Desk Company. In the 1879 city directory Mr. Wooton's listing did not mention a specific relationship with the company, and the divergence of the company address and his address (Appendix I) suggests a severance of ties. A definite break in his relations with the firm had come by 1880 when the Wootons moved to Danville, Indiana, although application for Wooton's last desk patent was made while he was living in Danville.

Mr. Wooton was one of the first ministers of the Danville Friends Church, which had 100 members in 1885.[43] In 1888 the Wootons moved to Glens Falls, New York.[44] As pastor of the Friends Church there, Mr. Wooton, in a letter to Benjamin Harrison congratulating him on being nominated to the presidency, wrote:

> . You will remember me as connected with the YMCA and also as living near you in the cottage on North St. Indpls. I have a very flourishing church here of 400 good solid members and am prospering in my work. . I want *you* elected but I am with *profound conviction* a Prohibitionist.[45]

[39] For a discussion of the inventive spirit of the period, see PETER C. WELSH, "United States Patents, 1790 to 1870: New Uses for Old Ideas" (paper 48 in *Contributions from the Museum of History and Technology*, U.S. National Museum Bulletin 241, Washington, 1966); and SIEGFRIED GIEDION, *Mechanization Takes Command* (New York: Oxford University Press, 1948).

[40] *Abstracts of the Records of the Society of Friends in Indiana*, edit. Willard Heiss (Indianapolis: Indiana Historical Society, 1962), part 1, p. 189.

[41] *Indianapolis Journal*, 19 March 1875.

[42] *Indianapolis News*, 15 March 1876.

[43] *History of Hendricks County, Indiana* (Chicago: Inter-State Publishing Company, 1885), p. 501.

[44] *The William Wade Hinshaw Index to Quaker Meeting Records in the Friends Library in Swarthmore College, Pennsylvania*, "Indiana" (microfilm, Indiana State Library).

[45] Benjamin Harrison papers (MSS Division, Library of Congress, Washington, D.C.). Letter from William S. Wooton, 26 June 1888.

## APPENDIXES

### I

*Listings of the Wooton Company, compiled from available city and business directories of Indianapolis, in the Indiana State Library and the Library of Congress.*

| | |
|---|---|
| 1871 | Wooton, Wm. S. & Co. (William S. Wooton, Richard L. Talbot), school and office furniture |
| 1872 | Wooton, Wm. S. & Co. (Wm. S. Wooten, R. L. Talbot), school furniture mfg, 23 and 25 S Alabama |
| 1873 | Wooton, W S & Co (W S Wooton, R L Talbot) school furniture mfgs, 33 [sic] Alabama |
| | Wooton, William S., Supt. Young Men's Christian Association, 35 N Illinois, res. 140 E North |
| 1874 | Wooton, W S & Co (W S Wooton, R L Talbot) mfgs of school and church furniture, 23 S Alabama |
| | Wooton, W S, of Wooton & Co., res. Prospect St. Indpls. |
| 1875 | Wooton Desk Co, desk and school furniture mfgs, office 10 W Washington, factory 190 to 200 E Merrill, John H. [sic] Blake, pres, H. H. Fulton Sec. W S Wooton, supt. |
| 1876 | Wooton Desk Co, cor Pennsylvania and Maryland |
| | The Wooton Desk Company, Manufacturers of Wooton's Patent Desk. 72 [?70] E. Market. John Love, Pres; Daniel D. VanWie, Sec; Thos. C. Moore, Treas. |
| | Wooton, Wm. S., Vice Pres. The Wooton Desk Company, res E S Park Ave. S Christian Ave. |
| 1877 | The Wooton Desk Co., manufacturers of Wooton's Patent Desk, 52 S Pennsylvania. J. G. Blake, pres., L. V. Horton sec. |
| 1879 | Wooton Desk Co. John G. Blake, pres. Lewis V. Horton, sec'y. Office: 30 E. Washington |
| | Wooton, Wm. S. mnfr school and office desks, 329 Mass Ave. res. 363 Mass Ave. |
| 1880–1884 | Wooton Desk Manufacturing Company, Lewis V. Horton, manager, 50 Vance Block [office] |
| 1885–1895 | [no listing] |
| (1892 | Wooton Office Desk Co. incorporated by A. S. Reed, Francis A. Coffin, and Percival B. Coffin) |
| 1896–1897 | Wooton Office Desk Co, John T. Dickson, pres. Lewis V. Horton, sec; cor Malott & Columbia Aves. |
| | Wooton Office Desk Co., John T. Dickson, pres. Charles Krauss sec. Henry Rauh Treas. Desk mnfrs, cor Malott and Columbia aves. |

## II

*Dealers in Wooton desks (list compiled from advertisements and catalogs of the company).*

| | |
|---|---|
| Washington, D.C. | Henry O. Towles, 1007 Pennsylvania Ave. |
| New York, New York | John R. Anderson, 262 Broadway |
| Philadelphia, Pennsylvania | D. B. Waggener & Co., 420 Walnut St. |
| Boston, Massachusetts | Ezra H. Brabrook, 96 & 95 Washington St. and 32 & 34 Friend |
| San Francisco, California | B. C. Brown, Rotunda, Merchants' Exchange |
| Columbus, Ohio | C. C. Chadwick, 109 North High St. |
| Denver, Colorado | B. H. Bayles, 351 Larimer St. |
| New Orleans, Louisiana | Geo. P. Davis, 35 Carondelet St. |
| Detroit, Michigan | Sutherland & Flach, 174 Griswold St. |
| Milwaukee, Wisconsin | Matthews Bros & Co., 413 Broadway St. |
| St. Louis, Missouri | Soule, Thomas & Wentworth, 208 S. Fourth St. |
| Chicago, Illinois | C. E. French, 150 LaSalle St. |
| Decatur, Illinois | S. Overmire |
| Glasgow, Scotland | F. & J. Smith, No. 45 Gordon St. |
| London, England | Francis & James Smith, 60 Berners St.<br>Richards, Terry & Co. |
| Rio de Janiero, Brazil | F. T. Gillett |

Dealers in Canada, Belgium, France, and Germany referred to in *Furniture Gazette,* 28 August 1875.

Orders for Wooton desks were sent by Haynes, Spencer & Co. to Mexico, China, Japan, India, Egypt, Turkey and Australia (*Manufacturing and Mercantile Resources and Industries of the Principal Places in Wayne, Henry, Delaware and Randolph Counties, Indiana,* 1884, pp. 20–21).

## III

*Written specifications for Wooton's patent no. 155,604, issued 6 October 1874, from U.S. Patent Office,* Specifications and Drawings, *1874 (Figure 2).*

### Improvement in Secretaries

*To all whom it may concern:*

Be it known that I, WILLIAM S. WOOTON, of Indianapolis, in the county of Marion and State of Indiana, have invented a new and useful Improvement in Secretaries; and I hereby declare the following to be a full, clear, and exact description of the same, reference being had to the accompanying drawing [Figure 2] making a part of this specification, in which—

Figure 1 is a view in perspective of the secretary when open, and Figure 2 is a sectional plan view taken on a line immediately below the folding desk.

This invention relates to an improvement in secretaries; and consists of a secretary constructed in three parts, two of which are together equal in width to the other, each part being provided with compartments or pigeon-holes suitable for storing books, papers, &c., and the two lesser parts hinged to the greater part, to serve as doors to the secretary, as will hereinafter more fully appear.

In the accompanying drawing, the secretary A is composed of three parts, B, C, and C′. The parts C and C′ are together equal in width to part B, and are hinged thereto to serve as doors for the secretary. Each part, B, C, and C′, is provided with compartments or pigeon-holes, D, suitable for receiving and storing books, papers, &c. The part B is provided with a folding desk, E, hinged thereto so as to fold upwardly within the secretary when it is desired to close the same. The part C is provided with a spring-catch, F, which bites upon the keeper G within the part B only when both of the parts C and C′ are closed. A keeper, H, is made in the part C to receive the bolt from a lock on the part C′. I is a spring-catch in the edge of the folding desk E for holding it in place when closed. JJ are the legs or supports upon which the secretary rests.

Having thus described my improvements, what I claim as new and useful, and desire to secure by Letters Patent, is—

A secretary constructed in three parts, two of which are together equal in width to the other, each part being provided with compartments or pigeon-holes suitable for storing books, papers, &c., and the two lesser parts hinged to the greater part to serve as doors to the secretary, substantially as set forth.

In testimony that I claim the foregoing improvements as above described, I have hereunto set my hand and seal this 11th day of March, 1874.

WM. S. WOOTON

## IV

*Written specifications for Wooton's patent no. 172,362, issued 18 January 1876, from U.S. Patent Office,* Specifications and Drawings (*Figure 3*).

### Improvement in Office-Desks

*To all whom it may concern:*

Be it known that I, WILLIAM S. WOOTON, of the city of Indianapolis, county of Marion and State of Indiana, have invented a new and useful Improvement in Office-Desks, of which the following is a full and complete specification, reference being had to the accompanying drawings.

The object of my invention is to utilize more of the desk for the purpose of shelving and pigeon-holes than is available in the usual methods of construction, and, at the same time, render the portion devoted to such use convenient and easy of access to the occupant. The general form of my desk is like, or similar to, the cabinet office-desk in common use, having a recess in front.

To accomplish my object I locate in the wings or ends of the desk cases or chests of a rectangular shape, provided with shelves or pigeon-holes, as may be desired, as shown at A′ in the front elevation of Figure 1. At the other end or wing of the desk the chest or case is shown as when closed. These chests or cases, as shown in the end elevation of Fig 2, and also in the plan view of Fig. 3, are hinged or pivoted (*c* and *c′*) at a point about central of their greatest width to the end paneling of the desk, which paneling is permanent, covering the rear half of the end of the desk. At A′, Fig. 3, one of the cases is shown partially revolved or opened, the other chest or case A being shown as when closed, showing that quite or nearly all the space at the ends of the desk is utilized for the purpose desired.

Thus it is apparent that the occupant of the desk can, from his seat, readily swing open the chests or cases, presenting them to him in a position accessible to their contents, or as readily close to them.

The front portion of the paneling, that incloses the central space of the desk, is on a curve, as shown at B and B′, Fig. 3, to accommodate it to the circular movement of the chests or cases. The central portion D may be used for shelving or pigeon-holes, as in the ordinary cabinet-desk.

What I claim is—

The hinged or pivoted chests or cases A and A′, located in the wings or ends of the desk, and operating substantially in the manner described, for the purpose set forth.

WM. S. WOOTON.

Witnesses:

Joseph Ridge,

Lorenz Schmidt.

## V

*Written specifications for Joseph A. Moore's patent no. 199,089, issued 8 January 1878, from U.S. Patent Office,* Specifications and Drawings (*Figure 18*).

### Improvement in Cabinet-Desks

*To all whom it may concern:*

Be it known that I, JOSEPH A. MOORE, of the city of Indianapolis, county of Marion, and State of Indiana, have invented certain new and useful Improvements in Cabinet-Desks, of which the following is a specification:

Reference is had to the accompanying drawings, which are made a part hereof, and on which similar letters of reference indicate similar parts.

Figure 1 is a perspective view of an open desk embodying my invention. Fig. 2 is a plan view of the base and the circular track thereon, showing also, by dotted lines, the positions of the various parts above them. Fig. 3 is a rear elevation, showing the compartments arranged for the use of the persons who may use this part as a standing desk; and Fig. 4 is a partially-sectional view, showing more fully than the other views how the table is attached and supported, and the end of one of the sections or wings of the desk, and with the

caster or truck *e* attached thereto and resting on the circular track.

Referring to these drawings, the various portions are marked with letters of reference as follows:

A A are the wings of the Desk, which are hinged to an upright shaft, and turn thereon. B is the writing-table, and is attached to the same upright shaft as the wings. C is an upright shaft, to which the wings or sections of the desk, and also the writing-table are attached, and on which the wings turn sufficiently to permit the desk to be changed from an open to a closed position, or vice versa. C′ is an arm of said shaft, by which the writing-table is attached thereto. D is a base or foot for the desk, composed, preferably, of crossed timbers, in which the upright shaft is set, and which preferably supports the entire weight of the desk . . .

*e* is one of a set of rollers or casters, which are placed on the bottom of the wings and above the track when it is used. Instead of placing this circular track upon the base, as shown in the drawings, it may be divided into segments, and attached to the bottoms of the wings, in which case the rollers would be placed upon the arms of the base, and the track would then run upon them, instead of they upon the track.

This construction may be regarded, for some reasons, as perhaps the superior, and I shall probably adopt it upon a portion at least of the desks which I manufacture.

. . .

In each of the wings a recess, *g*, is constructed large enough to admit of the corresponding end of the writing-table. This construction admits of the desk being closed up at any time without disturbing the table or the papers that may be lying thereon.

To those who have frequent occasion to close their desks this feature will be found to be of extreme value, as it will effect a very great saving of time, and is believed to be entirely new.

Another feature of my invention is the utilization from the rear of the tops of the wings as standing desks. Their depth admits of all necessary compartments being made in the back as well as the front side for the reception of papers and books.

A large-sized desk on this plan gives ample room for the convenient use of three persons, and the wings can be used with equal facility as standing desks in any position, and as well when closed as when open. This feature, however, will probably be left off in some instances, at least in the smaller sizes of desks. In very large desks it may be found best to set the feet *a a a* under the outer corners of the wings, in order to give them a firmer support, in which case they will be provided with casters. (Not shown.)

The principal objects of my invention are to provide a handy and commodious desk, which can be closed at one operation and be locked with a single lock, and which can also be so closed without in any way disturbing the writing-table or the papers lying thereon, which objects are fully accomplished by the construction and arrangement of parts hereinbefore shown and described.

. . .

JOSEPH A. MOORE.

In presence of—
Herman F. Sprandel,
C. Bradford.

## VI

*Written specifications for Wooton's patent no. 247,979, issued 4 October 1881, from U.S. Patent Office,* Specifications and Drawings (*Figure 24*).

### Cabinet-Desk

*To all whom it may concern:*

Be it known that I, WILLIAM S. WOOTON, of the town of Danville, county of Hendricks and State of Indiana, have invented certain new and useful Improvements in Cabinet-Desks, of which the following is a specification.

The object of my said invention is to produce a cabinet-desk, (or a desk composed of vertically-hinged sections containing pigeon-holes and other like compartments and a writing-table,) in which the writing-table shall be longer in proportion to the whole width of the open desk than heretofore. This is accomplished by so constructing and attaching the several sections that while the two side sections shall serve, as ordinarily, for doors to the central or main section, the said central section, (to which the table is attached,) shall be of greater width than the combined width of said two side sections, as will hereinafter be more particularly set forth.

Referring to the accompanying drawings, which are made a part hereof, Figure 1 is a front elevation of my improved desk when closed; Fig. 2, a similar view when open; Fig. 3, a horizontal section, looking downwardly from the dotted line *x x* in Fig. 1; and

Fig. 4, a horizontal section, looking downwardly from the dotted line *y y* in Fig. 2.

In said drawings, the portions marked A represent the permanent or main portion of my improved desk; B, the writing-table to the desk, which is hinged to the portion A and is supported thereby; C C, swinging wings hinged to each side of the part A, and which, when closed, meet together in the center, thus completely shutting the desk; E, a latch for holding the wings closed, and F a catch for the latch.

By referring to the drawings, and especially to Fig. 3, it will be seen that the two wings C C, while serving to completely close the desk, are together considerably less than equal in width to the main portion A. This result is attained by mounting the wings on hinges or pivots, which are located at a point nearer to the center of the desk than the outside of the sides of the central section, and attaching a hinge-strip, about equal in width to the distance between the outer edges of the central section, and the point where the side sections are pivoted thereto, to each of said wings, thereby enabling said wings to be swung around in such manner that they will, when entirely open, occupy positions (see Fig. 4 of drawings) similar to those which they would occupy were they together fully equal in width to the main portion, as is the case where the ordinary construction is employed. By means of this arrangement an important addition to the usefulness of the desk is attained.

The limit of convenient size for these desks is that wherein all parts can be conveniently reached by the user when the desk is open, as shown in Fig. 2, without moving from his chair; but this limit has heretofore so shortened the writing-table (which can only be as long as the inside diameter of the part A, to which it is attached) as to seriously interfere with the usefulness of the desk, while to make it large enough to meet the requirements in this particular has necessitated the attaching of wings so large as to be partially beyond reach, and so heavy, unless of an otherwise unnecessarily strong construction, as to be in danger of sagging, and thus impairing the construction.

In addition to the advantage specified, the pivot-hinges which I am enabled to use in this construction are stronger and of better appearance than common hinges. They leave no opening between the main portion and wings in any position, which makes the desk more finished in appearance when open.

While I prefer in this desk to use pivot-hinges composed of the pivots *c c'* and the pivot-eyes *a a'*, as shown, I may, of course, vary the form of the hinges at pleasure so long as their location and operation remain substantially the same.

Having thus fully described my said invention, what I claim as new, and desire to secure by Letters Patent, is—

The combination, in a cabinet-desk, of the central section having the usual pigeon-hole space and writing-table, with the two side or door portions provided with extensions or strips and hinged or pivoted inside of the central section, whereby the table and the pigeon-hole space are made about equal in width to the combined widths of the door portions and their extensions, substantially as set forth.

In witness whereof I have hereunto set my hand and seal, at Elizabethtown, Indiana, this 26th day of July A.D. 1880.

WM. S. WOOTON

In presence of—
A. Vaught,
John Thomas.

## VII

*Persons owning Wooton desks, 1875–1876. A partial list, including all names given in company catalogs and publicity cited.*

Abbot & Hamilton, Publishers, Lebanon, Indiana
Abbott, H. W., Insurance, Elizabeth, New Jersey
Barrett, Adison, U.S. Quartermaster, 12 desks, Jeffersonville, Indiana
Baxter, W. H., Secretary, California State Grange, San Francisco, California
Bell, J. L., Philadelphia, Pennsylvania
Bender, W. S., Manager, Atlantic & Pacific Telegraph Company, Virginia City, Nevada

Benham & Stedman, Music, Indianapolis, Indiana
Birdwistell, Mathers & Co., Merchants, Louisville, Kentucky
Bishop, William D., Grand Central Depot, New York
Blakelee, Geo. E., "In Door and Out," Indianapolis, Indiana
Bond, William, New York
Brewster, William, Treasurer, E & P Railroad, Erie, Pennsylvania
Brooks, J. W., Cashier, Citizens' Bank of Hagerstown, Indiana
Brown, B. C., Daily Evening Post, San Francisco, California
Carter, George, Attorney at Law, Indianapolis, Indiana
Chambers & Quinlan, Manufacturers, Decatur, Illinois
Clerk's office, Benton County, Indiana
Cook, W. H., Ed. & Pub., Physio Medical Journal, Cincinnati, Ohio
Coombs, W. M., Dentist, Titusville, Pennsylvania
Correy, H. H., M.D., La Grange, Georgia
Cottingham, H. M., Railroad Agent, Atlanta, Georgia
Cowles, E., Editor, Cleveland "Leader"
Darnell, H. C., Note Broker, Indianapolis, Indiana
Davis, F. A. W., Cashier, Indiana Banking Co., Indianapolis, Indiana
Deal, W. E. F., Attorney, Virginia City, Nevada
Donnelly, A. J., Cattle and Sheep Dealer, San Francisco, California
Dossol, Gustave, Banker, also President, French Savings and Loan Society, San Francisco, California
Doyal & Gard, Frankfort, Kentucky
Drill, J. M., Northern Central Railway Co., Baltimore, Maryland
Dyman, Frank J., Secretary, Water Works, Paterson, New Jersey
Eldridge, John B., Insurance, Hartford, Connecticut
Eyre, Archbishop, Glasgow, Scotland
First National Bank, Indianapolis, Indiana
Fisher, Jacob E., Secretary & Treasurer, Galveston, Houston & Henderson Railroad, Galveston, Texas
Fletcher & Sharpe, Bankers, Indianapolis, Indiana
Forbes, Peter, Glasgow, Scotland
Gill, Wm. F., Boston, Massachusetts
Graves, J. K., President, Chicago, Dubuque & Minnesota Railroad
Greenleaf, W. C., Dr., Peoria, Illinois
Gross, Wm. L. L., Attorney, Springfield, Illinois
Hamilton, J. W., M.D., Columbus, Ohio
Hamilton & M . . . [missing]
Hamond, H. B., Attorney at Law, New York
Harris, C., Sheriff, Benton County, Indiana
Harrison, C. H., Parsville, Kentucky
Harter, Charles E., Glasgow, Scotland
Haughey, Theo. P., President, Indianapolis National Bank
Hays, O., Kosciusko, Mississippi
Heckman, Geo. C., Rev., President, Hanover College, Hanover, Indiana
The Herald, Indianapolis, Indiana
Hobart, W. S., Capitalist, San Francisco, California
Holman, Jno. A., Attorney, Indianapolis, Indiana
Holmes, F. M. . . . [missing]
Hopkins, Alex. C., Superintendent of Public Inst., Indianapolis

Horton, I. C. . . . Gen'l A . . . [missing]
Hunn & Co. . . . [missing]
Hutchinson & Co., Advertisers, Indianapolis, Indiana
Indiana Deutsche Zeitung, Indianapolis, Indiana
Industrial Record, St. Louis, Missouri
Irving, W., Railroad Superintendent, Plattsmouth, Nebraska
Janey & Mensire, New York
Jenks, Isaac, Jr., Wolverhampton, England
Johnson, A. J., & Co., Real Estate Agents, Los Angeles, California
Johnson, W. H., Cashier, Bank of Hornersville, New York
Julian, J. B., Attorney at Law, Indianapolis, Indiana
Julian, Brown & Julian, Attorneys, Indianapolis, Indiana
Kingsbury, J. G., Indianapolis, Indiana
Lewis & Gurndy, Nottingham, England
Lippencott, S. R., Varnish Manufacturer, Indianapolis, Indiana
Macauley, Dan, Gen'l., Indianapolis, Indiana
Macy, David, President, I. P. & C. R'y, Indianapolis, Indiana
Martin, Alex., Rev., Morgantown, West Virginia
Mason, R. D., Railroad Ticket Agent, Atlanta, Georgia
McClaren, J. D., Warsaw, Indiana
McClelland, J. H., M.D., Pittsburgh, Pennsylvania
McIntyre, J. W., St. Louis, Missouri
McKinley, J. B., Attorney, Champaign, Illinois
Mechanical Journal, Indianapolis
The Metropolitan Printing Company, Chicago, Illinois
Mirick, H. D., Superintendent, M. K. & T. Railroad, Sedalia, Missouri
Morris, J. A., Secretary, Southern Life Insurance Company, Atlanta, Georgia
Moulder, A. J., Stockbroker and Mining Secretary, San Francisco, California
"The Nation," New York
Nelson, H. J., Manufacturer, Burlington, Vermont
New, Jno. C., First National Bank, Indianapolis, Indiana
New, Jno. C., U.S. Treasurer, Washington, D.C.
Noble, George, General Superintendent, T & P Railroad, Marshall, Texas
Osborne, N. M., Secretary, Miss. & O. Railroad Company, Petersburg, Virginia
Overmire, S., Decatur, Illinois
Palmer, C. H., Cashier, 1st National Bank, Danville, Illinois
Parrott, Tiburcio, Capitalist, San Francisco, California
Patterson, E. L., Agent, Erie Railway, Cleveland, Ohio
Peck, Charles, Secretary, Corbin Manufacturing Company, New Britain, Connecticut
Perkins, J. A., General Agent, P.C. & St. L. Railroad, Indianapolis, Indiana
Pettibone, W. H., Railroad Superintendent, Cedar Rapids, Iowa
Pierce, E. B., Superintendent, Peoria Plow Company, Peoria, Illinois
Potts, M. A., Mrs., Indianapolis, Indiana
Quin, Henry W., Appleton's Journal, New York, New York
Redington, Hostetter & Co., Wholesale Druggists, San Francisco, California
Reynolds, John, Indianapolis, Indiana
Ridgely National Bank, Springfield, Illinois
Rinker, Selem, Treasurer, Galveston County, Texas
Scribner & Co., New York
Seigfried, O. H., "Courier-Journal," Louisville, Kentucky

Semple, Parlin . . . [missing]
Smith, F. & J. [also dealers], Manufacturer, Glasgow, Scotland
Smith, Henry, Captain, Steamer "Etta White," Seattle, Western Territory
Smith, T. S., YMCA, Indianapolis, Indiana
Spann, J. S. & Co., Insurance Agents, Indianapolis, Indiana
Sternes, George P., President, Northern National Bank, Big Rapids, Michigan
Stevens, John S., Attorney, Peoria, Illinois
Stevens, R. S., Attica, Wyoming County, New York
Strickland & Co., Booksellers, Oakland, California
Subbork, F. R. & Son, Houston, Texas
Sutherland, J. R., Manufacturer, Detroit, Michigan
Swartz, Tedrowe & Tilford, Indianapolis, Indiana
Thompson, William, Toronto, Canada
Torry, W. C., Mayor, Connersville, Indiana
Tribbe, William L., Manager, Florence Sewing Machine Co., Indianapolis, Indiana
Tulleys, L. W., Banker, Ottawa, Iowa
Vancardale, W. W., Superintendent, YMCA, Chicago, Illinois
Van Norman, Arthur, Jackson, Mississippi
Verona Tool Works, Metcalf, Paul & Co., Pittsburgh, Pennsylvania
Wadsworth, J. J., Railroad Agent, Erie, Pennsylvania
Waggoner, D. B. & Co. [also a dealer], Stationers, Philadelphia, Pennsylvania
Walton, W. H. H., Muncy, Pennsylvania
Weaver, J. P., Indianapolis, Indiana
West, H. F. Bro. & Co., Merchants, Cincinnati, Ohio
Wetzlar, Julus, President, Capital Savings Bank, Sacramento, California
Williams, A. J., Williamston, North Carolina
Wishard, M. M., Superintendent, Orphan's Home, Knightstown, Indiana
Witt, B. F., Pension Agent, Indianapolis, Indiana

## VIII

*Evolution of Haynes, Spencer and Company, Richmond, Indiana, compiled from available city directories of Richmond in the Indiana State Library and from other sources cited.*

| | |
|---|---|
| ca. 1865 | Allen & Grant (John P. Allen, Geo. H. Grant), organized for the manufacture of Allen's patent self-supporting school desk |
| 1868 | Allen & Grant (George H. Grant and Joseph Marchant) |
| April 1869 | George H. Grant & Co. (Marchant sold his interest in the firm to Joshua Nickerson and William Wooton) |
| Dec. 1869 | George H. Grant & Co. (Turner W. Haynes bought out Mr. Wooton) |
| 1870 | George H. Grant & Co. (Turner W. Haynes and A. W. Kempleman) |
| by 1871 | Haynes & Spencer (Turner W. Haynes, William F. Spencer) |
| 1872 | Haynes & Spencer, making school desks and seats, "recitation seats, settees for halls & depots, counters on iron frames, counting-house desks, church pews, library and cabinet cases, gymnastic apparatus, etc.," worth $40,000 per annum (Andrew W. Young, *History of Wayne County, Indiana,* Cincinnati: Robert Clarke & Co., 1872, pp. 382–383) |

| | |
|---|---|
| 1878 | Articles of association filed with Secretary of State, Indiana, for Haynes, Spencer & Co. (Turner W. Haynes, William F. Spencer, Joseph Marchant) |
| 1880 | Company employed 125 employees, annual product worth $130,000 |
| by 1890 | Richmond Church, Hall & School Furniture Works, n E from 11th to 12th and n 12th from N E to RR |
| | Haynes, Spencer & Co., T. W. Haynes pres, W. F. Spencer secy and treas, Richmond Church, Hall and School Furniture Works [same address] |

## IX

*Evolution of the Indianapolis Cabinet Company.*

| | |
|---|---|
| 1862 | Wheeler & Wilson Sewing Machine Company, Indianapolis branch established for making cabinets and tables for their machines. |
| 1880 | Indianapolis Cabinet Company filed articles of association; officers John Roberts, Francis A. Coffin, William E. Coffin. |
| 1890–1891 | Indianapolis Cabinet Company, John Roberts, Pres., Francis A. Coffin, Sec. and Treas., Desk and Table Manufacturers, corner of Malott and Columbia avenues; telephone 248. |
| 1892–1894 | Indianapolis Cabinet Company, Francis A. Coffin Pres., Percival B. Coffin Sec. and Treas., cor Malott and Columbia Aves; telephone 248. |
| 1897 | Indianapolis Cabinet Works, John T. Dickson pres, Charles Krauss sec, Henry Rauh treas, desk mnfrs, cor Malott and Columbia avs. |

## X

*The Moore Combination Desk Company: Listings compiled from available newspapers, city and business directories of Indianapolis, in the Indiana State Library and the Library of Congress.*

| | |
|---|---|
| 1879 | Moore Combination Desk Co., 82 East Market, D. D. VanWie, General Manager |
| 1881 | Moore Combination Desk Co., Joseph A. Moore, Pres., D. D. VanWie Sec & Genl Mgr, P. J. Carleton, Treas. |
| 1882–1886 | Moore Combination Desk Co. Jos. A. Moore Pres; Philip J. Carleton sec Gilbert W. Warren treas & gen mgr. factory Brightwood office 84 E. Market salesroom 19 S Meridian |
| 1887–1889 | Moore Desk Co. Jos. A. Moore Pres, Thomas H. Harris Mngr and Treas. Philip J. Carleton Sec'y. |
| 1890–1891 | Moore Desk Co., George A. Emerson mngr & treas. Brightwood |
| 1892 | Emerson, George A. mnfr [no listing for company] |
| 1893 | Emerson-Moore Desk Co. Gloyd Ave. George A. Emerson |
| 1894 | Emerson-Moore Desk Co. 29½ N Penn; George A. Emerson, res 671 College Ave. |

## XI

*Pertinent patents, issued to persons mentioned in this paper.*

| | | | |
|---|---|---|---|
| 46, 980 | Allen, John P., Richmond, Indiana | Desk & seat, school | 28 March 1865 |

| | | | |
|---|---|---|---|
| 320, 913 | Coffin, Francis A., Indianapolis, Indiana | Desk curtain, slatted | 30 June 1885 |
| 338, 039 | " | Desk, cabinet | 16 March 1886 |
| 338, 632 | " | Desk, cabinet | 23 March 1886 |
| 344, 943 | " | Desks: lock for rotating | 6 July 1886 |
| 356, 449 | " | Desk, writing | 25 January 1887 |
| 4, 845 | Grant, George H., Richmond, Indiana | Design: school desk & seat-end | 25 April 1871 |
| 88, 563 | " | Desk & seat, school | 6 April 1869 |
| 115, 192 | " | Desk & seat, school | 23 May 1871 |
| 199, 089 | Moore, Joseph A., Indianapolis, Indiana | Desk, cabinet | 8 January 1878 |
| 203, 286 | " | Hinge for cabinet desks, etc. | 7 May 1878 |
| 9, 402 | " | Cabinet-desk, reissued | 12 December 1880 |
| 263, 055 | " | Cabinet-desk | 22 August 1882 |
| 260, 703 | Moore, Joseph A., D. D. VanWie & J. P. Recker<br>Spencer, William F., Richmond, Indiana | Desk | 4 July 1882 |
| 162, 707 | " | Settee | 27 April 1875 |
| 162, 708 | " | Chair seat | 27 April 1875 |
| 316, 495 | " | Seat & opera chair | 28 April 1885 |
| 337, 095 | VanWie, Daniel D., Indianapolis, Indiana | Combined map, chart & bookcase | 2 March 1886 |
| 187, 074 | Wiggers, Henry H., Cincinnati, Ohio | Desk | 6 February 1877 |
| 83, 896 | Wooton, William S., Richmond, Indiana | Desk, school | 10 November 1868 |
| 87, 386 | " | Desk & seat, school | 2 March 1869 |
| 155, 604 | Wooton, William S., Indianapolis, Indiana | Secretary | 6 October 1874 |
| 172, 362 | " | Office desk | 18 January 1876 |
| 247, 979 | Wooton, William S., Danville, Indiana<br>(half interest to A. J. Kempleman) | Cabinet desk | 4 October 1881 |

☆ U.S. GOVERNMENT PRINTING OFFICE : 1976 O—597-419

For sale by the Superintendent of Documents, U.S. Government Printing Office
Washington, D.C. 20402 - Price $1.10
Stock Number 047-000-00061-1
Catalog Number SI 1.28:3