LA-13930-MS
Approved for public release;
distribution is unlimited.

Challenges for Enterprise GIS in Post-Wildfire Hazard Mitigation and Emergency Management

Los Alamos
NATIONAL LABORATORY

AUTHENTICATED
U.S. GOVERNMENT
INFORMATION
GPO

Los Alamos National Laboratory, an affirmative action/equal opportunity employer, is operated by the University of California for the United States Department of Energy under contract W-7405-ENG-36.

This report was prepared as an account of work sponsored by an agency of the United States Government. Neither the Regents of the University of California, the United States Government nor any agency thereof, nor any of their employees make any warranty, express or implied, or assume any legal liability or responsibility for the accuracy, completeness, or usefulness of any information, apparatus, product, or process disclosed, or represent that its use would not infringe privately owned rights. Reference herein to any specific commercial product, process, or service by trade name, trademark, manufacturer, or otherwise does not necessarily constitute or imply its endorsement, recommendation, or favoring by the Regents of the University of California, the United States Government, or any agency thereof. The views and opinions of authors expressed herein do not necessarily state or reflect those of the Regents of the University of California, the United States Government, or any agency thereof. Los Alamos National Laboratory strongly supports academic freedom and a researcher's right to publish; as an institution, however, the Laboratory does not endorse the viewpoint of a publication or guarantee its technical correctness.

Challenges for Enterprise GIS in Post-Wildfire Hazard Mitigation and Emergency Management

Gordon N. Keating, Paul M. Rich, Marc S. Witkowski, Candace M. Batts, Justin H. Deming[1], Marcia A. Jones, Steve P. Linger, C. Randall Mynard, Thomas L. Riggs, and Douglas Walther

GISLab, EES-10, Earth and Environmental Sciences Division, MS-D452, Los Alamos National Laboratory, Los Alamos, NM 87545
[1]Department of Geology, University of Buffalo, Amherst, NY 14260

ABSTRACT

A natural result of the widespread growth in geospatial data use in large organizations is the development of institution-wide, or "enterprise," geographical information systems (GIS). The key issue in this development is effective geospatial data sharing within and across organizational boundaries. In the aftermath of the destructive May 2000 Cerro Grande wildfire, new ideas for enterprise GIS and geospatial information management are being considered at Los Alamos National Laboratory (LANL). Potential designs include various degrees of centralization, but barriers to change and challenges to implementation of enterprise GIS make the transition difficult. These challenges range from occupational divisions (e.g., operations vs. programmatic work) to budgets and data standards. The purpose of this paper is to offer observations and analysis based on our experience in designing a GIS for the Cerro Grande Rehabilitation Project (CGRP-GIS). By highlighting aspects of this work in the context of published studies on GIS design and organizational theory, we intend to inform the process of analysis and change occurring at LANL.

TABLE OF CONTENTS

1 INTRODUCTION: ENTERPRISE GIS, RISE OF THE PHOENIX 1

2 OVERVIEW OF THE CERRO GRANDE REHABILITATION PROJECT GIS (CGRP – GIS) 3

2.1 Background on the Fire 3

2.2 Major Stakeholders 5
2.2.1 LANL Management 6
2.2.2 Emergency Managers 6
2.2.3 Operations 7
2.2.4 Environmental Monitoring and Restoration 8
2.2.5 Researchers 8

2.3 Rationale for Enterprise GIS 10

2.4 Summary 11

3 EVOLUTION OF ENTERPRISE GIS 13

3.1 Integrated View of Geospatial Information Management 13

3.2 Challenges for Enterprise GIS at LANL 15
3.2.1 What Works? What is Broken? 15
3.2.2 Broken Cycle of Geospatial Information Management 15
3.2.3 Inefficiency, Duplication and a Lack of Coordination Among GIS Facilities 16
3.2.4 Neglect, Insufficient or Inconsistent Funding, and Insufficient Staff 16
3.2.5 Inadequate Quality Assurance and Metadata for Geospatial Data 17
3.2.6 Lack of Geospatial Information Management Policy and Standards 18
3.2.7 Lack of Institutional Geospatial Data Repository 18
3.2.8 Incomplete GIS Infrastructure 18

3.3 Model of an Enterprise GIS: GISLab 19
3.3.1 Goals 19
3.3.2 Data Management 19
3.3.3 Tools and Services 22
3.3.3.1 Website 22
3.3.3.2 Spatial Database Engine (SDE) 23
3.3.3.3 Internet Map Server (IMS) 23
3.3.3.4 Request Tracking System 24
3.3.3.5 Metadata 24
3.3.3.6 Stakeholder Database and User Group 24

3.4 Institutional Progress 25

3.5 Costs 26

3.6 Summary 28

4 SPATIAL INFORMATION MANAGEMENT FOR EOC 30

4.1 EOC Response to the Cerro Grande Fire 30

4.2 Design of the New LANL EOC: Preliminary Concepts 31

4.3 Summary 33

5 DISCUSSION 34

5.1 Perspective on the Evolution of Enterprise GIS 34

5.2 Role of the CGRP 34

5.3 Enterprise GIS and Natural Hazards Mitigation 34

5.4 Resistance to Enterprise GIS 35

5.5 Potential Solutions 37

5.6 Elements for Success: The Geospatial Information Management Plan 39

6 CONCLUSIONS 41

7 ACKNOWLEDGEMENTS 43

8 REFERENCES CITED 44

1 INTRODUCTION: ENTERPRISE GIS, RISE OF THE PHOENIX

Despite rapid growth in the use of geographical information system (GIS) technologies in public and private organizations, recent advances in data storage, processing, and networking do not necessarily result in increased data accessibility. The goal is enhanced geospatial data sharing within and across organizational boundaries. Increasingly, organizations are focusing on enterprise, or institutional, solutions to provide more effective information exchange (Burrough and McDonnell 1998, Meredith 1995) and to avoid redundant systems and services as well as incompatible infrastructure (Pinto and Onsrud 1995). Enterprise GIS is the virtual rallying call, and this paper offers evidence that it is the preferred and most effective solution to these needs. The key to successful enterprise GIS is the development of an appropriate institutional framework.

The evolution of data management in large organizations typically follows a "punctuated equilibrium" model (Gould and Eldredge 1977), in which the status quo limits growth and change until the system is disturbed and then rapid development occurs, followed by a new status quo. Such a disturbance may come in the form of a natural or man-made disaster, during which urgency demands action, the limitations of the existing system are exposed, and necessity opens the door for change. In the aftermath of the destructive May 2000 Cerro Grande Fire (Salazar-Langley et al. 2000a, Salazar-Langley et al. 2000b, Webb and Carpenter 2001), GIS and information management (IM) experts at Los Alamos National Laboratory (LANL) are considering options for improved geospatial data management and information exchange. These options are based on lessons learned during and shortly after the fire. Enterprise GIS design at LANL can involve geospatial data management with either centralized or decentralized data storage. In this report, we examine the challenges faced when building enterprise GIS at LANL, as well as the potential solutions. The experiences of the GIS community at LANL illustrate challenges: the difficulties and opportunities of any large institution during a time of transition.

The Cerro Grande Rehabilitation Project (CGRP) was launched at LANL shortly after the May 2000 Cerro Grande Fire. The CGRP goals are to restore infrastructure, to inform the public, to assist scientists and emergency managers in assessing long-term environmental impacts, and to mitigate future hazards associated with the aftermath of the wildfire. As a result of the firefighting and subsequent rehabilitation efforts, massive amounts of geospatial data are being generated. These data detail the extent, severity, and progression of the fire; the condition

of soils, vegetation, archaeological sites, and LANL facilities; and the management treatments for slope stabilization, flood mitigation, and revegetation. Geospatial data are being generated to support decisions about post-fire recovery, to mitigate floods and other hazards, and to document potential environmental impacts.

The wildfire crisis revealed the need for more readily available geospatial data. Consequently, a GIS component of the CGRP was charged with capturing and managing geospatial data associated with the fire fighting, rehabilitation, and hazard mitigation efforts. This information would provide rapid access to and visualization of the data and integrate the data into predictive models and risk assessment systems. This CGRP-GIS effort also focuses on building information management infrastructure, including a central geospatial data repository and an Internet-based mapping interface, along with data management policies and procedures to ensure data quality and streamlined access by many users at LANL (Witkowski et al. 2002). The effort to build a GIS to serve the CGRP soon highlighted the overarching challenges to building any enterprise GIS. These challenges range from building the necessary infrastructure in terms of hardware, software, and comprehensive databases, to data management in terms of collaboration and data sharing.

We begin this report with a summary of the Cerro Grande Fire, the needs and goals of the major stakeholders of the CGRP-GIS, and the issues common to all (Chapter 2). Within the framework of an idealized cycle of geospatial data management, we examine the need for enterprise GIS, the challenges to design and implementation, and a prototype solution (Chapter 3). The special needs of the Emergency Operations Center (EOC) are then considered, both in the broad conception by the emergency management industry and in the particular case of the new LANL EOC, currently in the design phase (Chapter 4). Finally, we provide a synthesis of our findings and offer some conclusions (Chapters 5 and 6).

2 OVERVIEW OF THE CERRO GRANDE REHABILITATION PROJECT GIS (CGRP – GIS)

2.1 Background on the Fire

The Cerro Grande Fire, which began as a prescribed burn on Thursday, May 4, 2000, was set by Bandelier National Monument personnel to reduce brush and reestablish native vegetation (Figure 2.1). That night the fire slipped out of control and became a wildfire, heading north and east from its starting point on Cerro Grande, southwest of Los Alamos. By Sunday, May 7, 50-mile-per-hour winds whipped the fire out of control, the LANL EOC was activated, and the Western Area neighborhood of Los Alamos was evacuated.

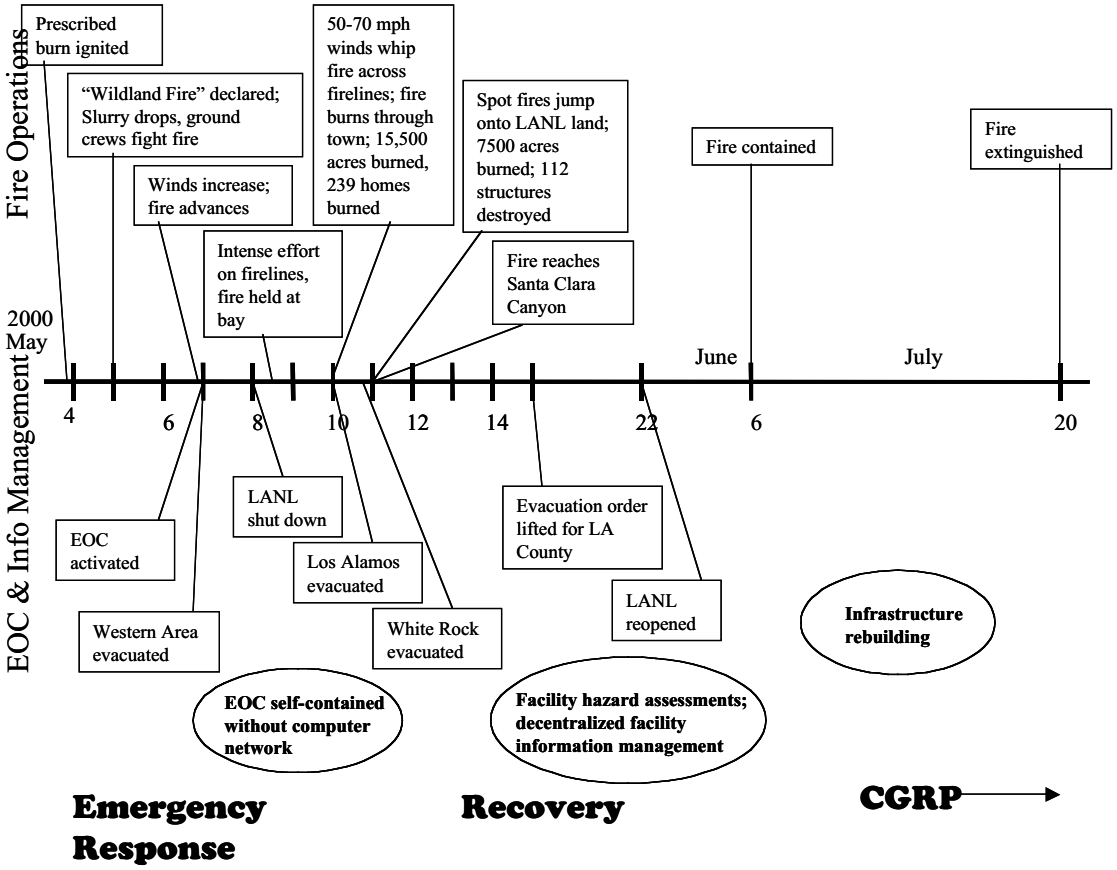

Figure 2.1. Timeline for Cerro Grande Fire, highlighting fire-operations activities (top) and the status of the Emergency Operations Center (EOC) and information management (bottom) (modified after Webb and Carpenter 2001).

By that Sunday evening, the LANL administration announced emergency closure for Monday, May 8, and LANL employees did not resume normal work schedules until Monday, May 22. On Wednesday, May 10, conditions grew more dangerous, and the entire town of Los Alamos was evacuated as 50- to 70-mph winds drove the fire across fire lines and into town, eventually burning 15,500 acres in 9 hours. Later that night, the town of White Rock was also evacuated, bringing the total number of displaced people to 18,000.

The fire was officially contained on June 6, a month after it started, and it was not extinguished until July 20. During this extraordinary period, over 48,000 acres of National Forest, County, Pueblo, private, and LANL land burned. This total included 8,000 acres of LANL land and 112 LANL structures. In Los Alamos, 239 buildings were destroyed, displacing 429 families. Total losses and expenses associated with the fire-fighting and recovery efforts exceeded $1 billion (Salazar-Langley et al. 2000a, Webb and Carpenter 2001).

During the fire, the EOC was a hub for communications, information, and emergency management. Emergency managers required current data on facilities, infrastructure, LANL hazard areas, terrain, meteorological conditions, fire status, and the whereabouts of workers in the field. Leaders from many areas of LANL converged on the EOC to bring expertise and aid in making crisis decisions. Unreliable electrical power and computer networks made external information difficult to access, and the majority of decisions had to be made on the basis of information stored at the EOC and recovered by GIS experts, even though more current information existed elsewhere at LANL. An emergency operations center was set up in Santa Fe and staffed with LANL and Sandia National Laboratory personnel. Further challenges were posed by communications systems that were incompatible with the many agencies involved in the fire-fighting effort (Salazar-Langley et al. 2000b).

As the active front of the fire passed to the north and east, away from the main LANL technical areas, the firefighting effort changed to recovery work. The EOC continued to be the nexus for information and coordination. The main focus of the recovery efforts at LANL was the safe restart of normal operations. This included hazard assessments of all facilities and formal approval for occupation and work in LANL buildings. Because LANL had never before been confronted with the complete evacuation of the site (and county) or with an emergency of this magnitude, the lack of a comprehensive emergency plan hampered the efficiency of the restart process (Salazar-Langley et al. 2000a). No central priority list existed to guide the efforts

to save or reopen LANL buildings. The decentralized nature of facilities management, with its distributed and redundant information management systems, led to concerns about data accuracy, access, and consistency (Salazar-Langley et al. 2000b).

The "recovery" effort evolved into the CGRP in late June 2000. Given the recognized limitations in availability and quality of geospatial data during the fire crisis and recovery periods, an important component to the multi-million-dollar CGRP effort is the development of an efficient GIS and information management system for the CGRP and the new EOC. This project, the CGRP-GIS, is tasked with building a geospatial data warehouse for fire-related projects, including efficient data storage and access, reliable data quality, and adherence to national metadata standards. Given the challenges posed by inadequate institutional GIS resources during and shortly after the Cerro Grande Fire, the focus on improved institutional GIS at LANL could be viewed as a phoenix rising from the ashes.

2.2 Major Stakeholders

The form of the CGRP-GIS and the potential LANL enterprise GIS depends on the composition of its "stakeholders," those who have a share or interest in geospatial data at LANL. GIS stakeholders fall into three general categories: data providers, data users, and customers. Data providers are those who generate new geospatial data and serve as the steward or owner, responsible for these particular data. Data users are GIS professionals and analysts who need access many kinds of geospatial data, recombine it in the course of their work, and often generate new, updated or derived, datasets. Customers pay for particular GIS products or sets of work. GIS stakeholders at LANL share common needs, such as data quality standards, data documentation ("metadata"), consistent data formats, and data archiving. However, each stakeholder has unique goals and requirements, in terms of infrastructure (hardware/software) and data, as well as preconceptions about the value of the enterprise GIS to his or her goals and the willingness to participate in data sharing (Figure 2.2). When each group of GIS stakeholders at LANL is identified and understood, an enterprise GIS can be designed to better serve their needs. In this section of the report, we provide a summary of the major groups of stakeholders in the CGRP-GIS by considering the identity of the stakeholders, the roles they play, and their unique needs for geospatial data and GIS capabilities.

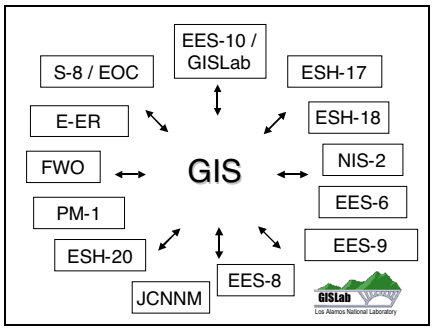

Figure 2.2 LANL GIS stakeholders have a common need for well-documented, accurate, and accessible geospatial data. Stakeholders are identified by LANL division and group designations (e.g., ESH-17); JCNNM means Johnson Controls Northern New Mexico and EOC is the abbreviation for Emergency Operations Center.

2.2.1 LANL Management

LANL management is responsible for institutional policies and procedures, oversees work performed, and makes funding decisions. Until recently, GIS has received little attention or recognition by top-level managers and has mostly been supported as relevant to the LANL mission at the project level. Top-level management has a key role in the eventual success or failure of any enterprise GIS. During crises, management supports the emergency activities by handling public information regarding operations status and potential environmental impacts during and after the emergency. The GIS and geospatial data needs of LANL management are mostly derivative, in the form of status reports and summary graphics, including maps and tabular analyses. Management depends on data providers and data users from all parts of LANL, including operations and research GIS professionals.

2.2.2 Emergency Managers

Emergency managers coordinate the response to natural and anthropogenic emergencies at LANL, serving as the central nervous system of crisis operations. Their responsibilities include management of environmental, safety, and security issues. For larger crises, this group maintains the EOC, where representatives from LANL management and operations converge to coordinate activities during an emergency.

Because of the uncertain and potentially wide-ranging impact of natural and human-induced hazards, emergency managers at the EOC require efficient access to diverse types of geospatial and tabular data at LANL, and therefore they have comprehensive GIS and IM needs.

These data types include topographic and environmental information; roads, buildings, utilities, and security layers; and tabular information regarding facility use, potentially hazardous substances, and human resources. The results of predictive simulations (e.g., flooding, atmospheric dispersal, wildfire, etc.) may also be helpful during crises. While the EOC managers cannot anticipate all data needs, each crisis command team member (from diverse areas of LANL management) understands the key supporting information necessary to make informed decisions during a crisis. Each member can provide guidance for the development of a complete data repository.

As was demonstrated during the Cerro Grande Fire, the EOC must be self-contained during emergencies and cannot depend on access to distributed data sources. Therefore, system requirements at the EOC include large-volume data storage devices, database and software servers, networked workstations, visualization and cartographic software, and efficient off-site backup of critical data.

2.2.3 Operations

Operations personnel (from RRES, FWO, ISEC, PM, and S divisions and from JCNNM) maintain the infrastructure, handle raw materials and waste, coordinate fire protection, and plan and implement improvements and new construction at LANL. During crises, facility managers team with security and other emergency managers at the EOC to make informed decisions and coordinate emergency activities.

The geospatial data needs for operations are centered on infrastructure: roads, utilities, structures, hazardous materials etc.; however, physiographic and environmental data (e.g., topography, vegetation, geology, soils, waste sites, plant and animal habitat, archaeologic sites, erosion potential, and runoff) are important as well. Supporting tabular data include information on projects underway in various facilities, personnel, chemical/nuclear material lists, and contact lists. Operations personnel generate much of their own data, but they also draw heavily on data and expertise (orthophotos, geology, topography, etc.) from other LANL divisions. The utilities mapping team (JCNNM UMAP) provides facilities location data and as-built diagrams with a high degree of accuracy and precision by using the global positioning system (GPS) and other surveying technology. Planning personnel (PM-1) use GIS to integrate geospatial data from all parts of LANL for use in the siting of new facilities.

Much of the operations data (geospatial and tabular) are generated and used in Computer Aided Design (CAD) systems. Typically CAD data are migrated to a GIS format for producing maps and performing analyses. Infrastructure data are foundational (base or core information) and are of value to all users that focus work on LANL land (researchers and emergency responders alike). Therefore data documentation, currency, and accessibility are critical.

2.2.4 Environmental Monitoring and Restoration

The environmental monitoring and restoration personnel (ESH Division and ER Program) are responsible for the ongoing monitoring and environmental cleanup efforts at LANL. They generate massive environmental databases that are typically updated at frequent intervals and tied to modeling of contaminant transport and environmental effects. A diverse group of environmental experts focuses on issues concerning waste sites, terrain, flora, fauna, soil and underlying geology, surface water, groundwater, and the potential or actual release of contaminants. These experts provide technical expertise and guidance for operational and planning purposes at LANL in addition to producing reports for regulatory agencies, government officials, and the public.

The varied sampling and analysis projects undertaken by environmental professionals require detailed topographic information and complex, feature-rich geospatial data stored in large databases. Environmental GIS experts generate new geospatial data and depend on institutional databases (Potential Release Sites, facilities, utilities, etc). These experts need advanced GIS software and high-end hardware, in addition to off-site backup. As a result of the considerable time and money invested in local GIS capabilities, these workers may be concerned about the loss of data ownership in the process of evolving toward an enterprise GIS.

2.2.5 Researchers

Researchers are involved in a broad range of activities, often with comparatively narrow scope and focus. Researchers typically use a suite of basic geospatial and tabular data (topography, climate, geology, ecology, etc.), and derive specialized datasets and results from numerical models. Typical research projects are carried out by a small number of people, and the scope of the work may focus on the LANL region or on external sites. The product of the external work is often a report or professional publication intended for a national or international audience rather than exclusively for internal LANL use. As a result, the need for or interest in

data sharing or exchange may be less for researchers. However, as a group, researchers are heterogeneous in their activities and perspectives. Research focusing on the LANL area may rely heavily on institutional data resources, from topography to soils to infrastructure, and the product of the work may be of interest to many others within LANL. Whereas, research focused on other regions may be of less immediate institutional concern.

Historically, most research datasets have a relatively short lifetime, are generally stored locally, and are eventually superceded or abandoned once the analysis results are published. As a result, there has been little need for off-site backup, although research projects might utilize it if it were available, especially for research that focuses on the LANL region. Research geospatial data that may be of value to others at LANL are often not documented or captured. Increasingly, researchers are working with large, georeferenced datasets, and funding agencies, including DOE, are requiring more attention to integrated information management, including requiring researchers to documents and make data sets available to others. As multidisciplinary and long-term research increases, and as researchers require more data fusion and long-term study, there are increased needs to document, archive, and make data accessible. These trends are expected to continue.

Many LANL researchers may not have an interest in enterprise GIS because of the perceived large burden of effort and money that would be placed on their short-term projects to make data compatible (format, metadata, QA) with a centralized system for which they may see little immediate use. Enterprise GIS may be viewed as either a luxury that researchers cannot afford or as a burden that takes resources away from research efforts. This perception is especially strong in the case of research that focuses on geographic regions external to LANL. There are also concerns about data ownership and about sharing incomplete or unpublished ideas with competing research groups. On the other hand, enterprise GIS can permit researchers the opportunity to "publish" the results of their work in a way that is not possible with traditional paper media. Large geospatial datasets can be stored in a geospatial data warehouse and "published" via an Internet map server to allow others to explore the richness of the research results that are referenced in a traditional research paper.

Because a significant set of LANL research focuses on solving institutional problems (e.g., models of contaminant transport, design of analytical technologies, and analysis of land stewardship options), GIS needs can often carry an institutional perspective that strongly

overlaps the interests of managers, operations, and environmental monitoring/restoration stakeholders.

2.3 Rationale for Enterprise GIS

This analysis of major CGRP stakeholders reveals several fundamental problems for implementing an integrated, institution-wide GIS. Primarily, the major stakeholders are working with different deadlines and different goals. Environmental monitoring and infrastructure reference databases (e.g., utilities, structures, roads) emphasize longer-term institutional and regulatory concerns, such as change control, updates, consistency of data format, and documentation of data sources. Research projects often place a higher priority on short-term goals of rapid analysis and publication, with much of the knowledge held in the minds of individuals. Data documentation, consistency of data format, and long-term archiving may not be a high priority. Once a given research project is completed and summarized, data are stored in an *ad hoc* fashion and often are eventually lost.

However, these disparate approaches do have many common needs, such as data quality standards and a geospatial information management plan. With proper design, enterprise GIS can promote data sharing while protecting data security and while promoting increased integration of operations and research efforts for the benefit of the institution. Enterprise GIS can enable all stakeholders to work more for the good of the institution by helping project and operations workers to provide complete and accessible data, by helping researchers to conveniently complete neglected tasks such as documentation and archiving, and by ensuring that research results are available to serve LANL management, operations, and environmental monitoring/restoration. Large and small projects alike can benefit from metadata, consistent data formats, and data archive and backup arrangements. Long-term operations work, for example, can benefit from the results of specialized studies of slope stability or wildlife habitat, while readily available infrastructure data may be of great value to researchers. These connections must be highlighted in the context of enterprise GIS with efficient procedures that do not add undue burden on already overtaxed project teams. Otherwise, "different user and task requirements will continue to result in different systems being established. Different systems result in incompatible data formats and restrict the flow of information and data exchange between users" (Information Architecture Project 1997).

All GIS stakeholders at LANL share another common challenge as each works to assemble the necessary geospatial and tabular data for a project at hand. Data gaps present the quandary of spending money to reproduce data that probably exists somewhere at LANL versus spending the time to hunt it down, along with the necessary quality assurance (QA) and source information (metadata). Once the data are located, further hurdles include data compatibility, currency, accuracy, and access. Is the data owner/steward someone with whom a working relationship exists? How is this communication gap bridged? The next chapter delves more deeply into these and other issues and offers potential solutions in the form of enterprise GIS.

2.4 Summary

1. With the recognized limitations in availability and quality of geospatial data during the fire crisis and recovery periods, an important component to the multi-million-dollar CGRP is the development of an efficient GIS and information management system for the CGRP and the new EOC. Results of this effort could be expanded to help inform the current discussion of the design of a more efficient GIS for LANL.

2. The major GIS stakeholders at LANL fall into the following five main groups:
    - Emergency Managers: require current operational, infrastructure, and environmental data on-hand in the EOC data warehouse; must be self-contained during crises;
    - Facility Management / Operations: create and maintain infrastructure and facilities data; require CAD/GIS compatibilities; this data is important for many other GIS players at LANL, and data access and compatibility are paramount;
    - Environmental Monitoring and Restoration: develops and maintains large, long-term data sets; requires GIS experts and data warehousing, as well as GIS analysis services;
    - Researchers: broad variety of projects, often with narrow scope; often self-contained with less interest in long-term data storage; may be concerned by possible burdens of enterprise GIS;
    - Lab Management: requires status reports and summary graphics; handles policies and public relations.

3. These GIS stakeholders work with different deadlines and different goals.

4. Common stakeholder needs for effective institution-wide data exchange include metadata cataloging; data accessibility, accuracy, currency, and compatibility; and the infrastructure, policies, and procedures to make this possible.

3 EVOLUTION OF ENTERPRISE GIS

Geographical information system (GIS) technology is playing an increasingly important role at LANL. Enterprise GIS refers to the GIS infrastructure needed to manage geospatial information for large organizations. This chapter provides an overview of the need for implementing enterprise GIS at a complex institution like LANL and focuses on the challenges for doing so.

3.1 Integrated View of Geospatial Information Management

A complete, or unbroken, cycle of geospatial IM involves flows of data from source to database, from database to data user, and, if modifications have been made, from the data user back to the database, with necessary steps to ensure that data is complete, secure, documented, and accessible (Figure 3.1). These steps include a suite of necessary data operations: formatting, quality assurance, documentation (metadata), cataloguing, tracking, backup, delivery, and updating.

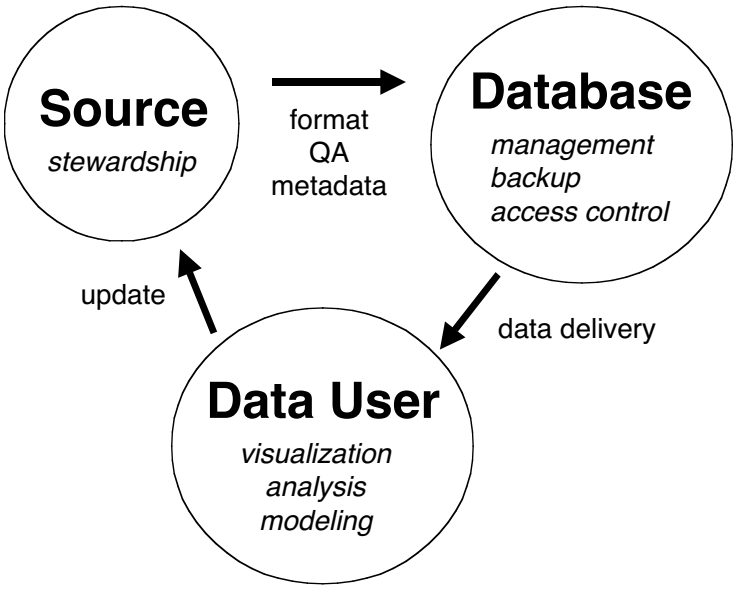

Figure 3.1. The cycle of geospatial information management. "Source" refers to the original or modified data as provided by the data steward.

The realm of geospatial data has three main aspects: source, management, and use. At the source of geospatial data, stewardship is the generator's primary responsibility. Such stewardship includes ensuring quality and accuracy, performing updates and corrections as needed, and protecting the resources from accidental loss or security violations (Information Architecture Project 2001). The data steward is the primary point of contact for anyone accessing the resources. Data documentation (metadata) must be part of the data steward's effort during data generation. Data generation has generally been the purview of various facilities and operations organizations at LANL (e.g., UMAP, ER, ESH, etc.), and it is always part of the science (e.g., research and project support) process. However, stewardship has often been minimized by budgets and not given the importance it deserves, except in some specific areas of data collection, e.g., remote sensing and geologic mapping.

Data management involves data organization, access, delivery, documentation (metadata), and change control (the tracking and management of updates and edits to geospatial data). This area typically has been the realm of information sciences professionals—R&D information scientists, professional data managers, and database administrators.

Most of the effort in GIS to date has been in the "data use" area because of the need for immediate solutions to customers' problems. Often this area involves special case applications tailored for individual projects, rather than generic applications of more general utility. Traditionally, applications developers have not considered the relationship of end solutions to information sources and management. While these aspects blend in varied measures on any given project, they are typically treated separately, without benefit of an integrated geospatial data management plan. As geospatial information management matures at large institutions like LANL, there is an integration of all three aspects.

Data sharing is key for the smooth and efficient operation within the enterprise GIS environment, thereby enhancing efficiency, effectiveness, and decision-making ability (Pinto and Onsrud 1995). Given the high cost of geospatial data acquisition and maintenance, effective cataloging and sharing of the data enhances the collaborative development of geospatial data resources and can reduce overall cost. Since the earliest studies of enterprise GIS at LANL, there has been an understanding of the basic elements of effective data sharing as: "…a central repository where users can go to find the most appropriate data; metadata that provides the information to evaluate the suitability of the data to the task at hand; stewardship of the data that

delegates responsibility of maintaining the data and its metadata; and data transfer standards that provide for the expedient and efficient dissemination of that data" (Information Architecture Project 1997).

3.2 Challenges for Enterprise GIS at LANL

3.2.1 What Works? What is Broken?

At LANL, as in many large institutions, the level of expertise of individual staff and the capabilities of project teams are high. Because of the large size and long time frame of various projects, there is also significant GIS infrastructure in place in the form of hardware, commercial software licenses, and custom software applications. There is typically good informal communication among GIS experts in the institution as a result of ongoing collaborations. In general, small teams of GIS professionals throughout LANL work well internally and meet project needs within the scope of individual projects and organizational mandates.

However, at the larger level of the institution as a whole, the cycle of information management is broken, and GIS coordination is difficult. The translation from small, semi-independent GIS teams to an institutional, enterprise GIS involves many challenges, including duplication of facilities, lack of coordination, incompatible data format and architecture, inconsistent quality assurance and change control, and lack of data protection. Understanding these challenges is key to enterprise GIS success.

3.2.2 Broken Cycle of Geospatial Information Management

In contrast to the idealized cycle of geospatial information management (Fig. 3.1), the constellation of semi-independent GIS teams within LANL constitutes an inefficient institutional system without consistent geospatial IM policies and procedures. Key geospatial data are collected and used for short-term projects, but they are not documented with proper metadata and archived. Data providers may forget important details, and key personnel may leave the institution. The result is an inability to locate data, an uncertainty about limitations and quality, and the possibility for incorrect use of data. Potential data users may know that certain data exist in the institution, but the location and/or data owners are not known. Even when a copy of the data is obtained or is in common use (e.g., older facility maps), the origin, history, and quality of the data are typically not known.

3.2.3 Inefficiency, Duplication and a Lack of Coordination Among GIS Facilities

Because GIS capabilities have developed independently in many parts of LANL, the institution suffers the hindrance of "stovepiping," in which there is a lack of coordination and duplication among these facilities (Figure 3.2). While many GIS experts at LANL enjoy collegial relations and share information and experiences, the disadvantage of this informal organization is that access to geospatial data depends on personal relationships and not necessarily on policy. GIS efforts developed for individual projects result in many different standards, levels of quality, and variable data accessibility. In addition, these independent GIS facilities have developed unnecessarily redundant infrastructure for data management and delivery, and insufficient effort is focused to define the distinct institutional role of each GIS facility.

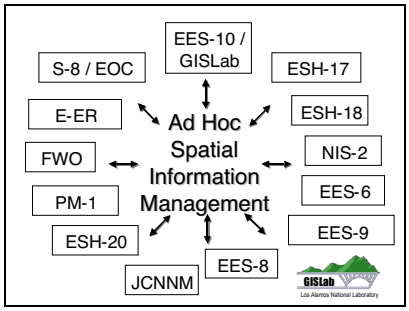

Figure 3.2 Lack of coordination among LANL GIS facilities. GIS users are identified by LANL division and group designations (e.g., PM-1); JCNNM means Johnson Controls Northern New Mexico.

3.2.4 Neglect, Insufficient or Inconsistent Funding, and Insufficient Staff

The availability of high-quality geospatial data depends upon sufficient funding, staffing, and the recognition of the institutional value of efficient access to such data. In many cases, lack of funding and insufficient staffing within teams that manage key geospatial data (infrastructure, environment, operations) result in poorly documented and poorly organized information that may not be available to emergency managers during a crisis. In particular, the following five areas of enterprise GIS are neglected at LANL due to these problems:

1. up-to-date and well-documented facilities data (roads, buildings, utilities, etc.);
2. up-to-date and well-documented environmental and health monitoring data (ecology, water quality, air quality, hazardous materials, etc.);
3. detailed compilation of geospatial data needed for emergency management;
4. research and development of information management technology and tools for implementation of enterprise GIS at LANL; and

5. 5. compilation of geospatial and numerical models and model results of value for project support, research, and environmental compliance.

3.2.5 Inadequate Quality Assurance and Metadata for Geospatial Data

The importance of quality assurance and proper metadata for geospatial data cannot be overstated. Quality assurance involves standardized procedures for ensuring that data meet standards for geospatial accuracy and reliability of associated attributes. As stated by Goodchild (1995), "Not only must agencies sharing data trust each other's quality control procedures, but they must also be able to communicate knowledge of data quality—sources of error, types of imperfection, measures of accuracy—in an objective and useful way". This "useful way" is metadata, or data about data. Metadata serve to document essential characteristics of data, including source, content, geospatial extent, format, quality, means for access, etc. An institution-wide policy must be developed to address geospatial data quality or metadata. The Federal Geographic Data Committee (FGDC), under Presidential order (Clinton 1994) and with representation by DOE, has formulated national standards for metadata and requires that all federal government agencies produce metadata for their geospatial data (Federal Geographic Data Committee 1998). Compliant geospatial metadata enable construction of searchable catalogs of geospatial data and serve as the "institutional memory" to ensure that data are available in the future.

Without standards for data quality and metadata, there is little hope for efficient data sharing at an enterprise level. Inaccuracies in key geospatial data are common, but they often go uncorrected due to the lack of available staff. The source and quality of older geospatial data are typically not fully known; even current LANL geospatial data often do not meet sufficient quality assurance standards and may not be suitable for compliance and regulatory obligations. When geospatial data do meet quality standards, staff do not have the time (or the sufficient obligation) to prepare basic metadata, despite the anticipated push by DOE to meet federally mandated FGDC requirements. The result of this missing documentation is a lack of a comprehensive institutional inventory of available geospatial data and their origin and quality. Without this inventory, an institutional master list of geospatial data needs, based on a comprehensive analysis of data gaps and inadequacies, cannot be prepared.

3.2.6 Lack of Geospatial Information Management Policy and Standards

The necessary policies for data quality and documentation must be standardized from the individual project team level to the institutional level. Heterogeneous (or nonexistent) geospatial information management policies result in inconsistencies in data quality and metadata, while "data that meet the quality standards and needs of one agency will frequently fail to meet the different, or more exacting, needs of others" (Goodchild 1995). An institutional geospatial information management plan integrates GIS efforts by specifying policies and standards and by indicating the procedures to implement these policies and the infrastructure needed to meet geospatial data needs. Such a plan must also indicate key data and how that data can be accessed.

3.2.7 Lack of Institutional Geospatial Data Repository

The lack of a central metadata catalog for and access to key institutional geospatial data can produce the failure of a GIS during times of greatest need. Complete and reliable geospatial data were not readily available during the May 2000 Cerro Grande wildfire or in the post-fire recovery effort. Data users frequently waste time and resources trying to locate geospatial data because data reside at many locations and users have no efficient means to find sources. While this problem is particularly acute during crises, more routine program goals cannot always be met due to unavailable, inaccurate, or conflicting data. There is no guarantee of current and authoritative data that are fully compliant with standards.

Given these critical needs, a central LANL geospatial data repository can ensure that geospatial data are in standard formats, that quality assurance has been performed, and that data are available without extensive searching. Such a repository can only be effective if it is supported at an institutional level and if policy requires that key geospatial data be placed in the repository. Establishment of an institutional geospatial data warehouse brings institutional benefits for day-to-day operations, programmatic needs, research, regulatory functions, decision making, and emergency management.

3.2.8 Incomplete GIS Infrastructure

A final challenge for enterprise GIS is the elimination of duplicate or redundant GIS infrastructure and the completion of the enterprise system. Repetitive and redundant software license agreements between each project team and a central software provider can result in much

higher costs than the costs that are possible in a coordinated (institutional) licensing agreement. While each team requires its own hardware, an institutional perspective can provide the benefit of coordinated, off-site data backups. The additional challenges of geospatial database management and access via the web (internal and external) can also be minimized through coordinated efforts at the institutional level. In conclusion, a well-formulated enterprise GIS design is good business.

3.3 Model of an Enterprise GIS: GISLab

3.3.1 Goals

Each of the challenges and institutional deficiencies described in the previous section must be recognized and addressed before an effective geospatial information management plan can be formulated and an enterprise GIS can be properly evaluated and perhaps implemented at an institution such as LANL. GISLab (EES-10) was tasked with designing and implementing a GIS in response to the needs of the CGRP effort by gathering geospatial data related to the Cerro Grande Fire and the subsequent recovery and rehabilitation efforts. These data are stored in a geospatial data warehouse for efficient access by stakeholders via network connections or a simple web interface. Additional new technology will provide programmatic and operations staff with more rapid access to data and increased functional and analytical capability. This will assist scientists and emergency managers in anticipating long-term forest fire effects and in dealing with future emergencies in the Los Alamos area. This effort illustrates key concepts of one enterprise GIS design that have been effective solutions, as well as solutions that remain elusive.

3.3.2 Data Management

Proper management of geospatial data provides infrastructure for

1. customer support – receiving and tracking of data from data providers,
2. staging – preparation of data for placement in a data warehouse,
3. data warehousing – archiving and management of data, and
4. data delivery – via portable media, networks, or the Internet.

At the center of the CGRP-GIS is a geospatial data warehouse with associated data policies and procedures. The flow of geospatial data in and out of the GISLab geospatial data

warehouse is cyclic (Figure 3.1). At the source, the data provider produces a version of the data in a standard format, determines its quality (accuracy and precision), and documents it in the standard metadata fields. This geospatial data is then added to the architecture of the database, and it is managed according to standard policies and procedures (including backup, access control, etc.) At any time, this data can be used in visualization, analysis, or modeling, which may involve modification through updates, edits, or additions or the generation of derived data (e.g., floodplain maps from DEM). The cycle begins again as the modified geospatial data are entered into the database with revised attributes and metadata. For the data warehouse to function effectively, this cycle must be preserved through the understanding and participation of all institutional GIS users. The GIS breaks when any part of the cycle is bypassed or when data leave the system.

The GISLab information architecture and data management practices ensure predictable customer interactions (both data providers and data users), quality assurance and documentation for data in the repository, standardized GIS interfaces and tools for access and analysis (Figure 3.3), and data security by accommodating change control and access restrictions as specified by the data providers.

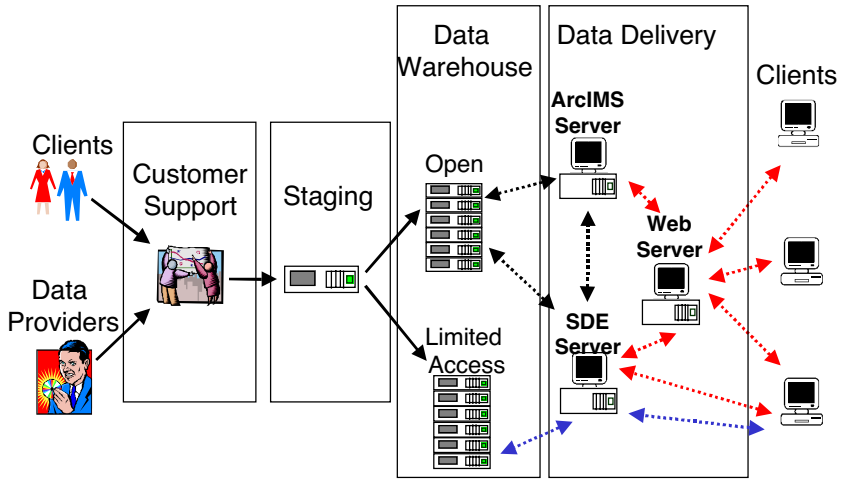

Figure 3.3. Data management in the GISLab Geospatial Data Warehouse. IMS stands for Internet Map Server and SDE stands for Spatial Database Engine.

Clients (data users and providers) contact the people and resources of GISLab through a "customer support" interface, in which needs are evaluated and requests are entered using a web-based interface. In the staging area, new geospatial data are processed before placement in the data warehouse. Data entering staging are archived in their unmodified source format and the initial quality assurance (QA) check is performed. Standard procedures (Figure 3.4) are applied to assign names for data layers, to ensure complete and consistent metadata, and to provide for access control when required by data providers.

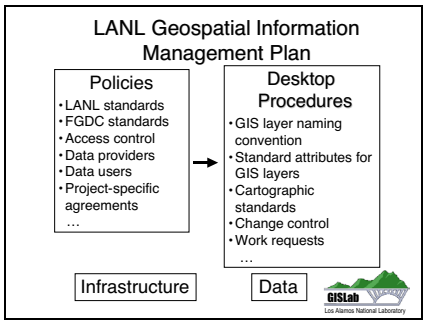

Figure 3.4. GISLab Geospatial Information Management Plan.

Metadata are checked for compliance with FGDC standards. Once the new geospatial data have been processed, they are transferred from staging to the data warehouse. The major elements of the physical data architecture are illustrated in Figure 3.5.

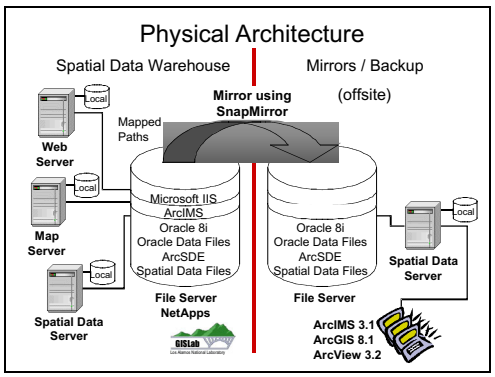

Figure 3.5. GISLab physical data architecture, including off-site backup. The architecture incorporates the following technology: high-capacity file server (NetApps; Network Applications, Inc.), database (Oracle 8i; Oracle Inc.), spatial database engine (ArcSDE; Environmental Systems Research Institute, Inc.

(ESRI)), web server (IIS; Microsoft, Inc.), Internet map server (ArcIMS; ESRI), and GIS software (ArcGIS, ArcView; ESRI).

The data in the geospatial data warehouse are accessible through three separate means. First, internal LANL users may access files via a GIS software client (e.g., ArcView, ArcGIS). Second, GISLab (team) users may access files directly, using file sharing across the UNIX and NT networks. Finally, users without GIS client software may view selected data layers or maps via the Internet, using a web browser. Internet Map Servicer (IMS) capability provides the means to have different content for internal (LANL) and external users.

3.3.3 Tools and Services

In addition to the core hardware, database, and policies and procedures for geospatial data access and use, GISLab staff members have developed tools and applications to streamline the information management process. These include a web-based interface for browsing the metadata catalog, for entering GIS service requests, for consulting policies and procedures, and for interacting with members of the LANL GIS community.

3.3.3.1 Website

The GISLab website (http://www.gislab.lanl.gov) provides a platform for institution-wide access to the CGRP-GIS. The site contains pages that describe the geospatial data warehouse, data quality and metadata policies and procedures, and data access agreements. An online catalog of metadata, which describes data sets residing both in the GISLab geospatial data warehouse and elsewhere at LANL, is analogous to a central "card catalog" for geospatial data. Maps are made available for direct download via a virtual Map Gallery. The website serves as a portal to several GISLab tools, including the request system for entry and tracking of requests for GIS services (cartography, applications development, geospatial analysis, etc.). The website is hosted by an external ("green" network) webserver that makes public much of the general information about enterprise GIS work at LANL. Material suitable for internal use only is served by a linked server behind the firewall ("yellow" network). The GIS community at LANL is kept informed by pages containing information about stakeholders (data users and providers) at LANL and a link to the LANL GIS User Group home page (see Section 3.3.3.4).

The CGRP-GIS website (http://www.cgrp-gis.lanl.gov), linked to the GISLab website, provides a clearinghouse for CGRP-related geospatial data. The data catalog section of this site

provides direct downloads of the Burned Area Emergency Rehabilitation (BAER) Team geospatial data layers and maps in shapefile and ESRI export file formats. An IMS capability on this site allows a user with a web browser to view sets of data layers that have been compiled as maps, and it provides limited GIS capabilities (e.g., zoom, pan, query attributes, turn on and off layers, print, etc.). A feedback page provides a link to the consensus project for the CGRP-GIS, which seeks to identify and clarify conflicts and reach consensus among stakeholders regarding issues of GIS design (Keating et al. 2001). Like the GISLab website, the CGRP-GIS site is hosted on an external ("green") webserver, with links to selected pages that reside behind the firewall (on a "yellow" server). In this way, we provide public access, while providing the capability to restrict access to LANL-only information.

3.3.3.2 Spatial Database Engine (SDE)

Access to geospatial data stored in the GISLab Oracle database is enhanced by the use of Spatial Database Engine technology (ArcSDE, ESRI, Inc.). The software is installed on the database servers and plays a fundamental role in a multi-user, enterprise GIS by providing the business rules for accessing and storing geospatial data within a database management system. For GISLab data managers, this tool provides a framework to organize, manage, and store geospatial data. For GISLab customers using various client software (e.g., ArcInfo, ArcEditor, and ArcView), it allows simultaneous access to our geospatial data from different physical locations. For large data sets, SDE enhances client performance by serving a subset of the data, depending on the user's area of interest, thereby eliminating the need to download massive data files to the client workstation. ArcSDE is also used to serve geospatial data across the Internet via ArcIMS mapservices (see section 3.3.3.3).

3.3.3.3 Internet Map Server (IMS)

The Internet Map Server (IMS) capability is in use for the CGRP-GIS and other GISLab clients, and its utility is expected to increase over time. This technology allows users to view geospatial data layers via an Internet browser interface, without the need for GIS software installed on the client computer. Map Services are compiled from related geospatial data layers (basemap, image, and feature data) and are published as an image-based web site for intranet or Internet access. IMS provides an efficient means for a wide range of stakeholders to view geospatial and tabular data related to the CGRP effort. Map Services can be built and modified

rapidly to meet project needs, thereby providing a means for near real-time information dispersal to stakeholders and decision makers. Web technology allows rich density in the data available on a single map via database queries (and associated tabular reports) and embedded, hyperlinked images and documents. This technology has the potential to greatly enhance decision support for natural hazard mitigation and emergency management.

3.3.3.4 Request Tracking System

The GISLab Request Tracking System is a web-based application that enables team members to manage numerous requests for GISLab services. The requests are made both internally by LANL groups and externally by a variety of agencies, and the Java-based application stores request information in the GISLab Oracle database. Each request is tracked from the time the request is entered to the time the request is completed, and it is retained in the database to provide historical information. Query and reporting interfaces allow users and data managers to assess and document the status of individual requests and groups of requests, and to gather statistics on the requests. In the case of ArcGIS map production services, the request system is capable of importing map properties directly produced by GISLab map production tools. The integration between map production and request tracking streamlines the flow of information through the GIS enterprise.

3.3.3.5 Metadata

Metadata are applied to geospatial data layers using ArcCatalog (ESRI, Inc.) and custom extensions to this product, including MetaBatch developed by GISLab. The GISLab MetaBatch enables us to rapidly apply metadata to large sets of data layers. In addition, the GISLab can track feature-level metadata through the use of standard data fields within each geospatial data layer. These commercial and custom GIS tools enable us to publish metadata documents on the GISLab web site, thereby providing a resource that can be browsed and searched to query and retrieve information about geographic data layers. Heirarchical indexes (HTML), interactive ("clickable") map indexes, and IMS metadata server tools (ArcIMS) are in development for access to metadata. This resource forms a cornerstone for enterprise GIS at LANL.

3.3.3.6 Stakeholder Database and User Group

The GIS community at LANL is supported by several tools and applications. A database contains information that pertains to GIS stakeholders, where a stakeholder is defined as an

individual (or organization) who is either a direct user of GIS or has a direct interest in GIS at LANL. Stakeholders include data providers, GIS professionals, and a diversity of customers. Information retained in the database includes contact information, specific areas of interest and expertise, hardware and software platforms used, and information about GIS service requests. The stakeholder database is an important tool for establishing a cohesive network of data providers, GIS professionals, and end-users, and it helps unify the GIS community and can facilitate collaboration. Participants can use the database to quickly identify stakeholders or participants in specific areas of GIS at LANL. GIS users around LANL can query the database to find other users who have similar GIS research interests and who could possibly provide valuable input as project collaborators. A website (http://www.gisuser.lanl.gov) provides an interface for stakeholders and administrators to interact with the database.

In addition to the clearinghouse aspect of the stakeholder database, an internal LANL GIS user group and e-mail listserver have been established to allow professional GIS users to interact. GIS-related issues can be posted and discussed in an open, forum environment that helps users reach solutions with the aid of the GIS community and keeps members informed about new technologies and upcoming events. The LANL GIS user group also provides a means to interact with external GIS users and stakeholders.

3.4 Institutional Progress

In Fall 2001, the LANL Chief Information Officer (CIO) formed a GIS Working Group, charged to summarize the current status of GIS at LANL, to identify key issues concerning institutional GIS, to envision a viable future state for GIS at LANL, and to offer recommendations for the implementation of enterprise GIS. In January 2002, the Working Group completed its work and reported to the CIO Policy Board. This group identified the following fifteen key issues concerning GIS for LANL:

1. Data Inventory
2. Data Sharing
3. Data Access / Security
4. Data Stewardship
5. Communication / Coordination
6. Software Licensing
7. Institutional Funding

8. Conformance to National Geospatial Model (Executive Order 12906, Federal Geographic Data Committee)
9. Territoriality: Programmatic/R&D vs. Operations
10. Role of GIS R&D in Keeping Up with Technology
11. Need to Use Existing Capability for Enterprise GIS
12. Education: GIS Literacy
13. Leadership at LANL and in the DOE Complex
14. Window of Opportunity: Need to Act
15. GPS Base Station

Based on the recommendations of this group, two GIS Steering Committees (Management and Technical) were formed in spring 2002 to develop a LANL geospatial data management plan based in sound business practices and institutional geospatial information standards and policies. As cross-organizational groups, the committees will enhance lateral interaction and build connections, trust, and buy-in among the GIS community (e.g., Pinto and Onsrud 1995).

3.5 Costs

Costs for enterprise GIS at LANL include both initial installation and ongoing operating expenses (Figure 3.6). The actual expenses need to be distributed among the appropriate nodes of GIS capability at LANL. Costs for the installation of enterprise GIS at LANL can be spread over 2-3 years and leveraged by coordinating spending from various sources—CGRP (already invested $2M), Emergency Operations Center (EOC) Multi-Channel Communications (MCC), Enterprise Resource Planning (ERP), etc. Ongoing operating costs can be met primarily through existing funding by a combination of institutional support, through inclusion of geospatial information management in project budgets, and by special allocations or grants.

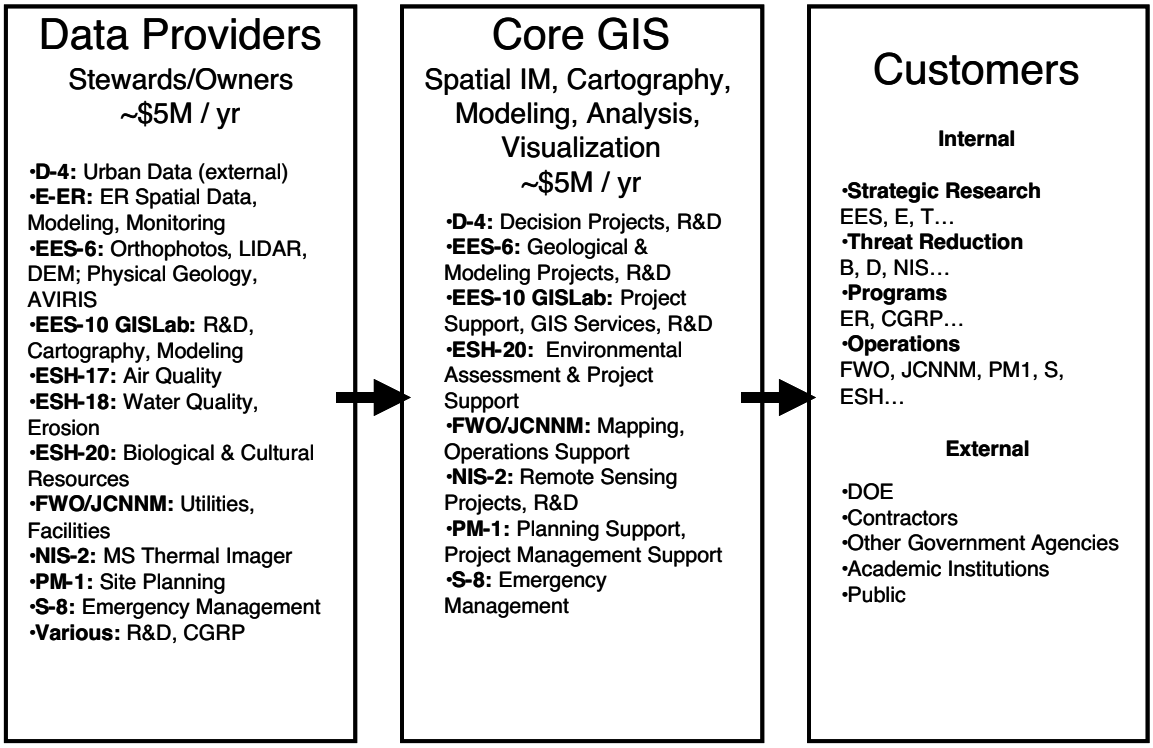

Figure 3.6. GIS at LANL (modified after LANL GIS Working Group 2002).

3.6 Summary

1. A complete, or unbroken, cycle of geospatial information management involves the flow of data from source to database, from database to data user, and, if modifications have been made, from the data user back to the database, with necessary steps to ensure that data is complete, secure, documented, and accessible.

2. Data sharing is key for the smooth and efficient operation of an enterprise GIS, enhancing efficiency, effectiveness, and decision-making ability.

3. The transition from numerous and small, semi-independent GIS teams to an institutional, enterprise GIS involves many challenges, including duplication of facilities, lack of coordination, territoriality, lack of metadata, incompatible data architecture, inconsistent quality assurance and change control, and the lack of institutional mechanisms for data sharing.

4. GISLab has designed for CGRP the technical solutions that may be applicable to enterprise GIS at LANL:
    - At the center of the CGRP-GIS is a spatial data warehouse with associated data policies and procedures that ensure predictable customer interactions, quality assurance, metadata documentation, and standardized GIS interfaces and tools.
    - The Spatial Database Engine (SDE) plays a fundamental role in enterprise GIS by forming an interface between GIS clients and massive data layers stored in the geospatial data warehouse. The SDE provides business rules for efficient, multi-user access to the database and enhances client performance by serving a subset of the data, depending on the user's area of interest. In this way, the need to download massive data files to the client workstation is eliminated.
    - The GISLab and CGRP-GIS websites (http://www.gislab.lanl.gov and http://www.cgrp-gis.lanl.gov) provide institution-wide access to the CGRP-GIS.
    - The web-based Request Tracking System enables team members to manage numerous requests for GISLab services. Query and reporting interfaces allow

users and managers to assess and document the status of individual requests and groups of requests and to gather statistics on the requests. The integration between map production and request tracking streamlines the flow of information through the GIS enterprise.

- Internet Map Server (IMS) technology allows users to view geospatial data layers via an Internet browser interface, without the need for installing GIS software on the client computer.
- The FGDC-compliant metadata document properties of each geospatial data layer, including originator, contact information, accuracy, projection, and feature type for a geographic data layer. Metadata provide a "card catalog" for geospatial data residing in many locations and form a cornerstone for enterprise GIS at LANL.
- The stakeholder database provides a means of unifying the GIS community at LANL by establishing a clearinghouse for user information. An internal GIS user group and e-mail listserver have been established to allow users to interact on a professional level.

5. Recent progress has been made toward institutional GIS solutions through the LANL CIO. A LANL-wide GIS Working Group surveyed GIS capability, identified key issues, and offered recommendations. Based on these recommendations, two GIS Steering Committees (Management and Technical) were formed in spring 2002 to develop a geospatial information management plan and institutional geospatial informations standards and policies for the institution.

4 SPATIAL INFORMATION MANAGEMENT FOR EOC

Nowhere is the need for enterprise GIS better illustrated than in the case of the EOC at LANL. As the difficult experience with geospatial data management during the Cerro Grande Fire demonstrates, emergency managers require current, accurate, and accessible geospatial data for decision support during times of crisis. The sources for these necessary data encompass nearly every part of the institution and necessitate the active participation of data stewards from the operations, project, and research communities.

4.1 EOC Response to the Cerro Grande Fire

Although the members of the EOC represent many areas of LANL operations (security, material safety, etc.), the organization and structure of the EOC at the time of the May 2000 Cerro Grande wildfire reportedly was not well-suited to dealing with natural hazards (Salazar-Langley et al. 2000a). As a facility primarily designed to deal with radiological and security incidents, the magnitude of the wildfire and its far-ranging effects were outside the original scope of the EOC, although the emergency managers during the fire were able to rise to the challenge. Emergency managers reported that their response during the wildfire was limited by unreliable electrical power and networked communication and a lack of accessible, up-to-date geospatial data during and immediately after the fire (Ramsey 2000, Salazar-Langley et al. 2000b, Keating et al. 2001). The emergency managers' decisions were limited to information (spatial and tabular) on-hand in the EOC, even though it was often not the most current or accurate data available at LANL under everyday (networked) conditions. Real-time data on meteorological and fire conditions and status of facilities and personnel were difficult to access from the EOC. Incompatible devices (radio, wireless, landlines) made communication difficult among field workers from multiple agencies who needed to share data. The lack of an efficient means for publicizing status messages to the evacuees and interested public resulted in a perceived information vacuum (Salazar-Langley et al. 2000a).

4.2 Design of the New LANL EOC: Preliminary Concepts

The design of new EOC, planned as part of the post-fire rehabilitation project at LANL, provides solutions to the limitations observed during the Cerro Grande wildfire. First and foremost, all necessary geospatial and tabular data will be available to emergency managers from file servers, potentially to be located in the EOC, ensuring data self-sufficiency in concert with the planned self-contained electrical power. These file servers will receive snapshots of critical institutional data on a regular basis to maintain data currency and accuracy. In addition, off-site backup facilities will maintain a copy of the EOC data repository—as was the case during the Cerro Grande Fire, access to external (e.g., out-of-state) data sources may be possible even when access to databases within the LANL system is not. This data repository concept requires that institutional data not only are accessible, but also that they are in standardized or compatible formats, including CAD, ArcGIS, Oracle, SQLServer, and other tabular and geospatial formats; this may pose the greatest design challenge. Field GIS systems on hardened laptops will provide integrated data resources for emergency management personnel in the EOC and in the field.

The GIS and IM components of the facility are being designed to better meet the information needs of the emergency managers during a crisis. Using the model of Wybo and Kowalski (1998), the activities and technological agents in this EOC design can be summarized as follows. Data collection involves remote personnel, GPS, weather reports, environmental data, etc., augmenting geospatial and tabular data stored on-site. Analysis capabilities include GIS and IM technology (file servers, offsite backup, databases, visualization tools (ArcView, ArcGIS), query interfaces, and scenario models (atmospheric dispersal, flooding, wildfire, etc.). Communication tools include telephones, radios, automatic vehicle tracking (GPS and GIS), and a response vehicle computer network with GIS software. The Los Alamos County 911 dispatch system may also be colocated at the EOC during emergencies to coordinate communications and response. Public information is handled by LANL Public Affairs information officers for media interface and a website with status updates. Because public information activity must function semi-autonomously and must not disrupt the other activities of the EOC during a crisis, it is best coordinated from a separate facility.

Three main classes of data are needed in the EOC GIS:

1. geospatial (Arc/Info format), including maps with orthophotography, topography, structures, utilities, roads, archaeological sites, threatened and endangered species, hazard (cleanup) sites;
2. drawings (AutoCad format), in particular building floorplans; and
3. textual/tabular, including a) facility emergency and safety plans; b) hazards inventories and waste materials information; and c) LANL personnel database access.

The information architecture requires integrated, LANL-wide databases with standardized format and automatic data retrieval for updates (Hart 2001).

Likewise there are three main data users at the EOC:

1. emergency managers,
2. division, site, and facility specialists, and
3. field responders (Hart 2001).

Emergency managers will have access to stored and real-time data combined with GIS software and predictive scenario-evaluation models like the Meteorological Information and Dispersion Assessment System (MIDAS; PLG Inc. 1999) and the Atmospheric Release Advisory Capability (ARAC; Lawrence Livermore National Laboratory 1999) (Howard, 2002). A product like "Web EOC," may be used as a status board application for EOC operations. Subject area experts at the EOC will utilize standardized queries and database reports for rapid access to facility data. Field responders will have geospatial and tabular data available on portable computers running integrated visualization (GIS) software like "MaxResponder" (Public Safety Corporation). Each human element (or 'actor') in the network must have access to all of the technological agents necessary to perform his or her tasks. The decision-support system (DSS) must be fully developed to include capabilities for data integration and display (GIS), database access, model (scenario) evaluation, team communication, and web-based information dissemination. This DSS will provide solutions to recognized weaknesses in many information management and decision support tools available to emergency managers (Tufekci and Wallace 1998), including the integration of emergency response GIS with local and regional emergency plans with capability for dynamic revisions and formulation of new response patterns, and the appropriate decision-support models for many crises, including near real-time assessment of the state of operations and evaluation of appropriate courses of action.

4.3 Summary

1. Emergency managers require current, accurate, and accessible geospatial data for decision support during times of crisis. Because the sources for these necessary data encompass nearly every part of the institution, the active participation of data stewards from the operations, project, and research communities is necessary.

2. Emergency managers during the May 2000 Cerro Grande Fire were able to overcome limitations in infrastructure (electrical power, computer networks), information management (lack of current geospatial and tabular data), and communications.

3. The plans for the new EOC include the following improved data management and communications facilities:
    - Geospatial data repository (file server, database)
    - Integrated LANL database access and updates
    - Off-site data backup
    - Data visualization tools
    - Improved communication tools
    - Mobile GIS

5 DISCUSSION

5.1 Perspective on the Evolution of Enterprise GIS

Although the use of enterprise GIS is a natural result of the growth in geospatial data use within institutions, this growth and evolution can be painful. A natural part of this evolution is the resistance to change that is manifested in unique ways at each institution. This resistance is affected by different stakeholder roles and stereotypes (e.g., operations vs. research). In addition, the typically excellent working relations among GIS professionals can be limited by organizational divides. In the final analysis, an enterprise GIS design for an organization like LANL must meet the needs and missions of a broad spectrum of stakeholders; the challenge lies in striking a balance in the degree of centralized storage, administration, and procedural control, while serving the needs of the GIS community for streamlined data documentation, access, and compatibility.

5.2 Role of the CGRP

The Cerro Grande Fire highlighted the need for institutional GIS solutions and presented a new opportunity for improved data sharing in an enterprise setting at LANL. The CGRP effort provides a common project with goals shared by the operations and research communities. Geospatial data are necessary for basic project planning and execution, and derivative data are being produced abundantly. A spatial data warehouse for the project is necessary, but obstacles to the centralization of CGRP data (storage, access, quality, documentation, format, and architecture) were not overcome until long after most CGRP-related efforts were well underway. The challenges to a CGRP-wide GIS encountered during this work laid the foundations for expanding the scope to a LANL-wide GIS infrastructure. As a result the institution as a whole will benefit from the CGRP-GIS efforts. However, as the scope for integrating GIS activities at LANL has expanded, so has the complexity of the design and the implementation to meet stakeholder needs.

5.3 Enterprise GIS and Natural Hazards Mitigation

Following the Cerro Grande Fire and the immediate recovery activities, GIS has been used at LANL in a variety of hazard mitigation activities, including forest thinning, forest fuel

characterization, floodplain delineation, flood and erosion modeling, and wildfire modeling. Many of these post-fire GIS activities have been limited by the lack of enterprise geospatial data management. From basic cartography to complex spatial analysis, these efforts require efficient access to current, accurate data layers, as illustrated by the case of planning for forest thinning for wildfire mitigation. GIS specialists produced maps of proposed areas of tree cutting on LANL land by using analyses that incorporated buffers around electrical lines, cultural and archaeological sites, and core habitat for threatened species. Additional factors, such as slope and vegetation class, were also important for determining thinning prescriptions. This work, which was done rapidly on short deadlines, required access to accurate and current data layers of known lineage. Well-documented data provide confidence in analysis and reporting, the latter being especially important for large-scale hazard mitigation work. The incomplete nature of the institution's metadata and data access infrastructure provided frustrating obstacles to these tasks and highlighted the need for an institutional geospatial data management plan.

Enterprise GIS can also provide enhanced hazard mitigation tools in the form of stored physics-based model results. Results of flood and erosion modeling can be used to plan sediment and flood water retention systems as well as to aid in evacuation plans during a crisis. Predictive model results (fire, flood, atmospheric dispersal, earthquake, volcanic eruption) can be useful to emergency managers before and during a crisis if the results are incorporated as layers into a GIS that supports the evaluation of possible emergency scenarios, a decision support system. Static maps provide an absolute minimum of information, but a GIS with access to important institutional data and model results can provide a much more powerful hazard mitigation and emergency management system.

5.4 Resistance to Enterprise GIS

Concrete steps to overcoming inefficient geospatial data management are relatively easy to identify but can be difficult to implement. An outside observer recently noted that the "soft-money culture" at LANL manifests an environment in which competition for perceived limited resources leads to many isolated, independent, project-centric GIS groups with limited motivation for data sharing and collaboration (Glazer 2001). Institutional resources are allocated without coordination and support redundant hardware, software, and data-generation, an even bigger problem when the idea of a central data repository is raised. This culture leads to a basic

lack of will to cooperate when organizational or personal incentives to share are insufficient to overcome the impediments (Craig 1995). Data and information are held closely as sources of control and power and there is an unwillingness to share data that are viewed as "proprietary" (Pinto and Onsrud 1995). One result of uncoordinated teams in large institutions is "stove-piping," or the redundant development of GIS capabilities and duplicate data, forming small, self-contained (and often competitive) pillars of activity.

These problems are often exacerbated by the apparent division between the needs and goals of facilities/operations and those of project/research staff. The differences in geospatial data management posed by long-term operations and monitoring vs. variable-length research projects may be difficult to overcome. Support for enterprise-level data stewardship (documentation, change control) may not be provided in operations budgets, and individual researchers do not typically budget for information management, especially for smaller, short-term projects. A divide commonly manifests in a difference in data formats between the computer aided design (CAD)-based systems in operations and the spatial-analysis software (e.g., ArcView and ArcInfo) used by researchers.

The state of GIS at LANL is the product of years of institutional history, and the process of change must begin with the characterization of the current state of the art in the institution. This process highlights problems and limitations, especially those identified during crises like the Cerro Grande Fire. Despite the extreme efforts put forth by many individuals in the aftermath of the fire to verify the safety of facilities and reopen LANL, the fire recovery effort highlighted many problems in the institution's IM system, including the lack of an institutional emergency plan and sometimes poor coordination between divisions (Salazar-Langley et al. 2000a, Salazar-Langley et al. 2000b). Stove-piping of resources and efforts was highlighted as a problem resulting from this poor coordination and leadership. Problems in coordination of non-centralized efforts resulted in redundancy, duplication of efforts, "turf guarding," and political wrangling over roles and responsibilities, all conditions that reduced the effectiveness of the recovery effort. Data-sharing was not effective. The synthesis of this post-fire analysis included a recommendation to integrate facility and programmatic response by evaluating interdependence and relationships (Salazar-Langley et al. 2000a, Salazar-Langley et al. 2000b).

5.5 Potential Solutions

What are the solutions to the institutional challenges for enterprise GIS and the identified reluctance to share data? Several steps have been suggested (Pinto and Onsrud 1995), beginning with integrating mechanisms that include task forces and cross-organizational teams, such as the CIO GIS Working Group and the new LANL GIS Steering Committees. Such efforts allow for lateral contact between organizations and create a level playing field for the design of the enterprise GIS. Cross-organizational teams seek to identify "superordinate goals" that transcend those of individual organizational units, provide value to all, and are attainable only through cooperation and data sharing within an institutional framework. In contrast to *ad hoc* personal exchanges, formalized processes and procedures for data exchange have been shown to produce a better flow of information (Pinto and Onsrud 1995), due to a better understanding of individual responsibilities and expectations. Furthermore, each GIS stakeholder must have incentives to participate, ideally in the form of resources for unmet needs. These solutions can be implemented through the organizational process of the enterprise GIS.

Attention must also be paid to the intangible aspects of the data exchange, including the real or perceived accessibility of key individuals and the quality of exchange interactions. Parties must feel that obligations will be met and promises kept, and there must be no real or perceived tendency to distort or hold back information, especially to leverage power or to attain personal goals at the expense of others (Pinto and Onsrud 1995). These aspects of a climate conducive to data sharing are more difficult to include in organization or procedures, but they are the positive outcome of an open, fair enterprise GIS design.

The actual form of enterprise GIS at a large institution like LANL may fall anywhere along a continuum of centralization. At one end of the spectrum, data and metadata are stored in a centralized repository available to all users. At the other end, individual GIS users maintain local datasets, and the "enterprise" aspect is limited to standardized software and policies on metadata, data quality, and standardized formats. Several models for enterprise GIS at LANL can be developed from this continuum, based on the diverse needs of the GIS community:

1. A centralized data repository. All geospatial data (and pertinent tabular data) are entered into a LANL-wide data repository. Data stewardship and responsibility for data currency and accuracy remain with the data owner/generator. The repository is administered by a dedicated team. A central metadata clearinghouse also resides with this group. Enterprise-wide

data standards ensure data quality, format, and documentation (metadata). This format provides greater assurance of uniformity in standards of quality, documentation, and format, but it requires significant administrative overhead for maintenance of the repository. It also requires that individual data generators invest the time to follow all data quality and format procedures and coordinate closely with the repository administrators on issues of data currency and change. A major advantage is that centralization can ensure adherence to policies and standards, and ensure data availability, security, and completeness.

2. Distributed data storage with enterprise standards. This middle-ground option calls for only as much centralized storage of geospatial data as is necessary for programmatic or operations needs. For example a centralized data warehouse could supply the EOC with a complete warehouse of important facilities, utilities, topographic, and environmental data crucial to emergency management; other data not required by the EOC need not be included in a central repository. Many datasets could remain in the stewardship (and storage) of the data owner, but enterprise standards for data quality, metadata, and format could allow efficient data sharing. The only uniformly centralized aspect of this model is a metadata clearinghouse (see web-based example in Section 3.3). From the information in this clearinghouse, a user could contact the data owner for more details and access information. In this model, the responsibility lies clearly with the data owner to properly document and archive the data for future use.

3. *Ad hoc* data sharing. This model is essentially *status quo*, with individual working relationships dictating the ease and efficiency of data sharing. Users develop informal understandings among themselves about the existence, accuracy, currency, and format of individual data sets. This format places the minimum burden on individual GIS stakeholders and keeps the responsibility of data stewardship with the data owner. However, overall data sharing is inefficient, and the possibility of redundancy and duplicated efforts is great. This model allows for possible enterprise policies for metadata, format, and quality, but it is up to the individual users to follow the standards. This model is least efficient and effective on an enterprise scale.

There is a clear need for efficient data sharing and enterprise-wide data standards, but complete centralization of geospatial (and much tabular) data may not be in the best interests of the diverse LANL GIS stakeholders. The metadata clearinghouse be constructed and populated, per Executive Order 12906 (Clinton 1994), as updated in OMB Circular A-16, and standards for

data quality, format, access, and documentation must be enforced by a cross-organizational body such as a LANL GIS Technical Steering Committee. While many individual data sets can reside with the data owners, the existence, status, and access mechanism must be made known. Certain core data of near-universal utility, such as LANL infrastructure, topography, and orthophotography, should be placed in a central repository with adequate change control and data currency administration. Implementation of an institutional solution to enterprise GIS requires slightly greater burden on individual GIS users, but the value in efficient data sharing far outweighs the extra work, especially as stakeholders adopt sound information management and business practices.

It is notable that several large government agencies have designed and implemented successful designs for enterprise GIS. These include the USGS EROS Data Center, NOAA, and FEMA, all of which use FGDC metadata to index and access datasets. These and other governmental agencies, including Sandia National Laboratories and the Hanford and Savannah River sites in DOE, are grappling with issues of data stewardship, archiving, and future access (Bleakly 2001, Maryak and Bergameyer 2001, Rush 2001). Collaboration and exchange of ideas among data managers from these agencies may streamline the difficult process of implementing enterprise GIS at LANL.

5.6 Elements for Success: The Geospatial Information Management Plan

Jack Dangermond, CEO of ESRI, Inc., (2002) proposes the following five elements for the success of enterprise GIS:

1. attain management support,
2. develop a plan,
3. be customer focused,
4. ensure in-house "ownership" for the process, and
5. build a "team of two" of technical expertise and management support to make enterprise GIS a reality.

Several of these elements have been addressed by the cross-organizational CIO GIS Working Group, and work continues in the LANL GIS Steering Committees, especially in the marriage of technical expertise and LANL management support. However, the key to success for enterprise GIS at LANL is the development of a sound geospatial information management plan.

Like any business plan, the geospatial information management plan must be financially viable and technically sound. According to Dangermond (2002), the plan should address the following five aspects:

1. definition and design specifications for enterprise GIS;
2. description of the internal and external databases being managed;
3. a plan for conceptual applications and database architecture;
4. system architecture, including hardware, software, and applications; and
5. the implementation plan.

The scope of the implementation plan encompasses tasks, methods, and activities, as well as a schedule; funding sources, and organizational responsibilities. While the details are outside the scope of this document, this outline provides the basis for the development of the geospatial information management plan.

6 CONCLUSIONS

"Enhanced information sharing will lead to several desired outcomes that various organizations seek: efficiency, effectiveness, and improved decision-making ability" (Pinto and Onsrud 1995).

GIS Stakeholders

The major GIS stakeholders a LANL, both for the Cerro Grande Rehabilitation Project and in general, include members of the facilities/operations and project/research communities. These workers represent data providers, data users, and customers of GIS products. Data needs, budgets, and timelines often differ. However, all of these stakeholders have common needs for effective institution-wide data exchange, including metadata cataloging and data accessibility, accuracy, currency, and compatibility.

Challenges and Solutions

The transition from numerous small, semi-independent GIS teams to an integrated, institutional GIS poses many challenges, including the duplication of facilities, lack of coordination, incompatible data formats, inconsistent quality assurance and change control, and the need for data protection.

Potential solutions to the challenges to enterprise GIS at LANL are being developed by GISLab and others, including a **CGRP spatial data warehouse** with an associated metadata clearinghouse, data policies and procedures, as well as standardized GIS interfaces and tools. The CGRP-GIS model could be used to serve the enterprise GIS needs of the larger LANL GIS community.

Recent progress has been made toward institutional GIS solutions through the LANL CIO. A LANL-wide GIS Working Group surveyed GIS capability, identified key issues, and offered recommendations. Based on these recommendations, two LANL GIS Steering Committees (Management and Technical) were recently formed to develop an institutional geospatial data management plan and to develop and implement geospatial data standards for the institution.

GIS and Emergency Management

Emergency managers require current, accurate, and accessible geospatial data for decision support during times of crisis. The sources for these necessary data encompass nearly every part of the institution, necessitating the active participation of data stewards from the operations, facility management, utilities, project, and research communities.

In order to overcome limitations in infrastructure, information management, and communications, the plans for the new EOC incorporate improved data management and communications facilities, including an onsite data repository (file server, database); integrated LANL database access and updates; offsite data backup; data visualization tools; improved communication tools; and mobile GIS. The decision-support system (DSS) must be fully developed to include capabilities for data integration and display (GIS), database access, model (scenario) evaluation, team communication, and information dissemination.

Enterprise GIS at LANL

Resistance to the development of institution-wide GIS is the result of several factors, including competition for limited resources and an apparent division between facilities/operations and project/research staff.

These factors contribute to poorly allocated institutional resources, resulting in redundant hardware, software, and data-generation. This occupational culture leads to a basic lack of will to cooperate and to share "proprietary" data unless personal and organizational incentives are provided. Stakeholders must feel that obligations will be met and promises kept, and there must be no real or perceived tendency to distort or hold back information, especially to leverage power or attain personal goals at the expense of other organizations (e.g., Pinto and Onsrud 1995).

The challenge for meeting the GIS needs of diverse teams and users in a large institution lies in striking a balance in the degree of centralization of data storage, administration, and procedural control, while serving the needs of the community for streamlined data documentation (metadata), access, and compatibility.

The actual form of enterprise GIS at a large institution like LANL may fall anywhere along a continuum, from a centralized data and metadata repository to distributed data storage with institutional standards concerning metadata, data quality, data format, and policies governing adherence to these standards, and data sharing.

A middle-ground solution that involves distributed data storage with enterprise standards appears to be the most likely, calling for only as much centralized data storage as is necessary for programmatic and operational needs. Under this institutional structure, data stewardship remains with the data owner, but enterprise-wide standards for data quality, metadata, and format allow efficient data sharing. The only uniformly centralized aspect is a metadata clearinghouse. Certain data of near-universal utility, such as infrastructure and topographic layers, should be placed in a central repository with adequate change control.

The key to success for enterprise GIS at LANL is the development of a sound geospatial information management plan. Like any business plan, the geospatial information management plan must be financially viable and technically sound. The plan should have the following five parts:

1. the definition and design specifications for enterprise GIS;
2. a description of internal and external databases being managed;
3. the plan for conceptual applications and database architecture;
4. the system architecture, including hardware, software, and applications; and
5. the implementation plan, encompassing tasks, methods, and activities as well as a schedule, an outline of funding sources, and organizational responsibilities.

7 ACKNOWLEDGEMENTS

This work was funded by the Cerro Grande Rehabilitation Project – GIS effort and the Earth and Environmental Sciences Division. We appreciate helpful discussions on institutional information management with Kathy Padgett, Gordon Besson, and Julie Crook. The manuscript benefited from thoughtful reviews by Fairley Barnes, Bill Carey, Kendra Henning, David Howard, Betty Katz, and Joan Stockum.

8 REFERENCES CITED

Bleakly, D., 2001. Issues for consideration for long-term spatial data archiving. In: Proceedings of 13th DOE Technology Information Exchange (TIE) Meeting, Albuquerque, NM, November 13, 2001.

Burrough, P.A. and R.A. McDonnell, 1998. Principles of geographic information systems. Spatial Information Systems and Geostatistics. Oxford University Press, Oxford, 333 pp.

Clinton, W.J., 1994. Coordinating geographic data acquisition and access: The national spatial data infrastructure, Executive Order 12906. Federal Register, 59(71): 17671-17674.

Craig, W.J., 1995. Why we can't share data: institutional inertia. In: H.J. Onsrud and G. Rushton (Editors), Sharing Geographic Information. Center for Urban Policy Research, Rutgers, New Brunswick, New Jersey, pp. 107-118.

Dangermond, J., 2002. Elements for success: the geospatial information management plan, Personal Communication to P. Rich, February 5, 2002.

Federal Geographic Data Committee, 1998. Content Standard for Digital Geospatial Metadata. FGDC-STD-001-1998.

Glazer, A., 2001. University of California Natural Reserve Board, Personal Communication to P. Rich.

Goodchild, M.F., 1995. Sharing imperfect data. In: H.J. Onsrud and G. Rushton (Editors), Sharing Geographic Information. Center for Urban Policy Research, Rutgers, New Brunswick, New Jersey, pp. 413-425.

Gould, S.J. and N. Eldredge, 1977. Punctuated equilibria: tempo and mode of evolution reconsidered. Paleobiology, 3(2): 115.

Hart, O., 2001. Update on progress of planning for new LANL EOC information management, presentation to LANL GIS User Group, October 25, 2001.

Howard, D., 2002. Personal communication to G. Keating, March 6, 2002.

Information Architecture Project, 1997. Geographical Information Systems. Los Alamos National Laboratory Information Architecture Standard IA-5A10-R1, LA-UR-96-471, 1-10 p.

Information Architecture Project, 2001. Glossary of IA Terms, website, Updated: 30.May.2001, Accessed: February 2002, http://www.lanl.gov/projects/ia/about/glossary.shtml.

Keating, G., S. Rasmussen and M. Raven, 2001. Consensus building tools for GIS design. Los Alamos National Laboratory Report LA-13894-MS.

LANL GIS Working Group, 2002. Report to Chief Information Officer Policy Board, Los Alamos National Laboratory, January 2002.

Lawrence Livermore National Laboratory, 2002. Forewarnings of coming hazards (ARAC), Website, Updated: 1999, Accessed: March 2002, http://www.llnl.gov/str/Baskett.html.

Maryak, M. and J. Bergameyer, 2001. Geospatial database software requirements specification. Westinghouse Savannah River Company, Savannah River Site Report PEC-GIS-2001-0010, 25 pp.

Meredith, P.H., 1995. Distributed GIS: if its time is now, why is it resisted? In: H.J. Onsrud and G. Rushton (Editors), Sharing Geographic Information. Center for Urban Policy Research, Rutgers, New Brunswick, New Jersey, pp. 7-21.

Pinto, J.K. and H.J. Onsrud, 1995. Sharing geographic information across organizational boundaries: a research framework. In: H.J. Onsrud and G. Rushton (Editors), Sharing Geographic Information. Center for Urban Policy Research, Rutgers, New Brunswick, New Jersey, pp. 44-64.

PLG Inc., 2002. MIDAS, dispersion modeling for release of toxic substances, Website, Updated: 1999, Accessed: March 2002, http://www.plg.com/pages/model.html.

Ramsey, G., 2000. personal communication to G. Keating, December 18, 2000.

Rich, P., M.S. Witkowski and G.N. Keating, 2002. Enterprise GIS Design. International Journal of GIS, in preparation.

Rush, S.F., 2001. Improving access to Hanford geospatial. In: Proceedings of 13th DOE Technical Information Exchange (TIE) Meeting, Albuquerque, NM, November 13, 2001.

Salazar-Langley, C.A., D.L. Hall and C.G. Coffman, 2000a. Cerro Grande Fire: Facility and Waste Operations Division and Facilities lessons to be learned report. Los Alamos National Laboratory Report LA-UR-01-1304, 20 p.

Salazar-Langley, C.A., D.L. Hall and C.G. Coffman, 2000b. Cerro Grande Fire: Laboratory recovery lessons to be learned report. Los Alamos National Laboratory Report LA-UR-01-1305, 44 p.

Tufekci, S. and W.A. Wallace, 1998. The emerging area of emergency management and engineering. IEEE Transactions on Engineering Management, 45(2): 103-105.

Webb, M.D. and K. Carpenter, 2001. The Cerro Grande Fire, Los Alamos, New Mexico. Los Alamos National Laboratory Report LA-UR-01-1630, 10 p.

Witkowski, M.S., P.M. Rich and G.N. Keating, 2002. A prototype for enterprise GIS design. Los Alamos National Laboratory Report, in preparation.

Wybo, J.L. and K.M. Kowalski, 1998. Command centers and emergency management support. Safety Science, 30: 131-138.

This report has been reproduced directly from the best available copy. It is available electronically on the Web (http://www.doe.gov/bridge).

Copies are available for sale to U.S. Department of Energy employees and contractors from:
Office of Scientific and Technical Information
P.O. Box 62
Oak Ridge, TN 37831
(865) 576-8401

Copies are available for sale to the public from:
National Technical Information Service
U.S. Department of Commerce
5285 Port Royal Road
Springfield, VA 22616
(800) 553-6847

Los Alamos
NATIONAL LABORATORY

Los Alamos NM 87545