ARMY RESEARCH LABORATORY



Evaluation of the Submodeling Technique for Analyzing Electronic Components

by Brian M. Powers and David A. Hopkins

ARL-TR-3627 **October 2005**

Approved for public release; distribution is unlimited.

AUTHENTICATED
U.S. GOVERNMENT
INFORMATION
GPO

NOTICES

Disclaimers

The findings in this report are not to be construed as an official Department of the Army position unless so designated by other authorized documents.

Citation of manufacturer's or trade names does not constitute an official endorsement or approval of the use thereof.

DESTRUCTION NOTICE—Destroy this report when it is no longer needed. Do not return it to the originator.

Army Research Laboratory
Aberdeen Proving Ground, MD 21005-5069

ARL-TR-3627 **October 2005**

Evaluation of the Submodeling Technique for Analyzing Electronic Components

Brian M. Powers and David A. Hopkins
Weapons and Materials Research Directorate, ARL

Approved for public release; distribution is unlimited.

REPORT DOCUMENTATION PAGE

Form Approved
OMB No. 0704-0188

Public reporting burden for this collection of information is estimated to average 1 hour per response, including the time for reviewing instructions, searching existing data sources, gathering and maintaining the data needed, and completing and reviewing the collection information. Send comments regarding this burden estimate or any other aspect of this collection of information, including suggestions for reducing the burden, to Department of Defense, Washington Headquarters Services, Directorate for Information Operations and Reports (0704-0188), 1215 Jefferson Davis Highway, Suite 1204, Arlington, VA 22202-4302. Respondents should be aware that notwithstanding any other provision of law, no person shall be subject to any penalty for failing to comply with a collection of information if it does not display a currently valid OMB control number.
PLEASE DO NOT RETURN YOUR FORM TO THE ABOVE ADDRESS.

1. REPORT DATE *(DD-MM-YYYY)*	2. REPORT TYPE	3. DATES COVERED (From - To)
October 2005	Final	July 2005

4. TITLE AND SUBTITLE

Evaluation of the Submodeling Technique for Analyzing Electronic Components

5a. CONTRACT NUMBER

5b. GRANT NUMBER

5c. PROGRAM ELEMENT NUMBER

6. AUTHOR(S)

Brian M. Powers and David A. Hopkins (both of ARL)

5d. PROJECT NUMBER
622618.H80

5e. TASK NUMBER

5f. WORK UNIT NUMBER

7. PERFORMING ORGANIZATION NAME(S) AND ADDRESS(ES)
U.S. Army Research Laboratory
Weapons and Materials Research Directorate
Aberdeen Proving Ground, MD 21005-5069

8. PERFORMING ORGANIZATION REPORT NUMBER
ARL-TR-3627

9. SPONSORING/MONITORING AGENCY NAME(S) AND ADDRESS(ES)

10. SPONSOR/MONITOR'S ACRONYM(S)

11. SPONSOR/MONITOR'S REPORT NUMBER(S)

12. DISTRIBUTION/AVAILABILITY STATEMENT

Approved for public release; distribution is unlimited.

13. SUPPLEMENTARY NOTES

14. ABSTRACT

The use of submodeling in a finite element model for structural response is investigated for a simple structure representative of an electronic circuit board subjected to projectile launch conditions. The basic technique and rationale for submodeling are discussed. The consequences of sampling rate when one is using the global model's response as input for the local model's response are also highlighted. Aditionally, the effect of submodeling in introducing artificial high frequency response is shown. Finally, it is shown that with proper selection of model parameters, submodeling can provide accurate stress results of electronic components in conditions similar to gun launch.

15. SUBJECT TERMS
electronic components; finite elements; submodeling

16. SECURITY CLASSIFICATION OF:			17. LIMITATION OF ABSTRACT	18. NUMBER OF PAGES	19a. NAME OF RESPONSIBLE PERSON
a. REPORT	b. ABSTRACT	c. THIS PAGE			Brian M. Powers
Unclassified	Unclassified	Unclassified	SAR	25	19b. TELEPHONE NUMBER (*Include area code*) 410-306-1961

Standard Form 298 (Rev. 8/98)
Prescribed by ANSI Std. Z39.18

Contents

List of Figures iv

List of Tables iv

1. Introduction 1

2. Sample Problem 2

3. Results 4

4. Conclusions 5

5. References 8

Distribution List 9

List of Figures

Figure 1. Finite element model layout with electronic chip. 2
Figure 2. Velocity load curve applied to base of support ring. 3
Figure 3. Global model with coarse representation of board. 4
Figure 4. Submodel domain. 4
Figure 5. Contour plots of Von Mises stress (psi) at t = 0.6 ms for (a) the baseline case, (b) 100-point load curve, and (c) 1000-point load curve. 6
Figure 6. Comparison of the Von Mises stress in a representative element in a lead for the baseline case and the two submodels. 7
Figure 7. FFTs of data from figure 6. 7

List of Tables

Table 1. Material properties of model components. 3

1. Introduction

The need for computational techniques to efficiently handle multiple length scales is increasingly important as finite element (FE) models become more detailed and complex. This is especially pronounced in structures containing electronic components. One example of interest is smart munitions, which are often evaluated in a dynamic analysis that simulates gun launch. The length scale of the electronics is typically orders of magnitude smaller than the overall size of the structure. This can lead to very small element sizes and a very large number of elements when mesh uniformity is imposed. In explicit dynamic analyses, the time increment is chosen, based on stability criteria (i.e., Courant condition) and is directly dependent upon the element size; see, for example, (*1*). Consequently, as the element size decreases, so does the time step; this results in an increase in the computational time that can be excessive, often restrictively so in the case of large models with very small components.

One way to alleviate this problem is to use global-local modeling approaches, one method of which is often referred to as "submodeling". A review of submodeling and other modeling global/local approaches is included in (*2*). The commercial FE package ABAQUS[1] includes a submodeling technique. This report explores whether the submodeling technique has applicability for modeling structures with electronic components using the technique available in ABAQUS.

Submodeling employs two models, as detailed in (*3*). In this report, the global model represents the entire structure and contains a coarse representation of the domain of interest (e.g., an electronic chip). The entire global model is sufficiently refined to accurately calculate the displacement solution on the boundary of the domain of interest. Subsequently, the solution obtained from the global model along the boundary of interest is applied as a displacement boundary condition on the submodel.

The submodel is a highly refined model of the domain of interest. The primary assumption of submodeling is that the structural details of the submodel do not significantly affect the solution in the global model. In most practical applications, there are no known *a priori* methods for determining the validity of this assumption. It is therefore left to the analyst to determine the validity of this assumption, based on prior experience.

[1]ABAQUS, which is not an acronym, is a registered trademark of ABAQUS, Inc.

2. Sample Problem

The submodeling technique was applied to a simplified geometry of an electronic component. The purpose of the example is to demonstrate how the technique can be applied to structural elements of an FE model with large differences in length scales. The length scales chosen are representative of those seen in typical smart munitions applications. Figure 1 shows the layout of the electronics with respect to the outer shell and the supporting structure. The electronics consist of two structures representing capacitors which are modeled as monolithic material, and a small outline integrated circuit (SOIC) eight-lead chip. The support ring has a 3-inch diameter, while the width of the leads on the chip is on the order of 0.010 inch. The scale difference is thus on the order of 300 to 1. This is an intermediate level of disparity in length scales and is typical for smart munitions.

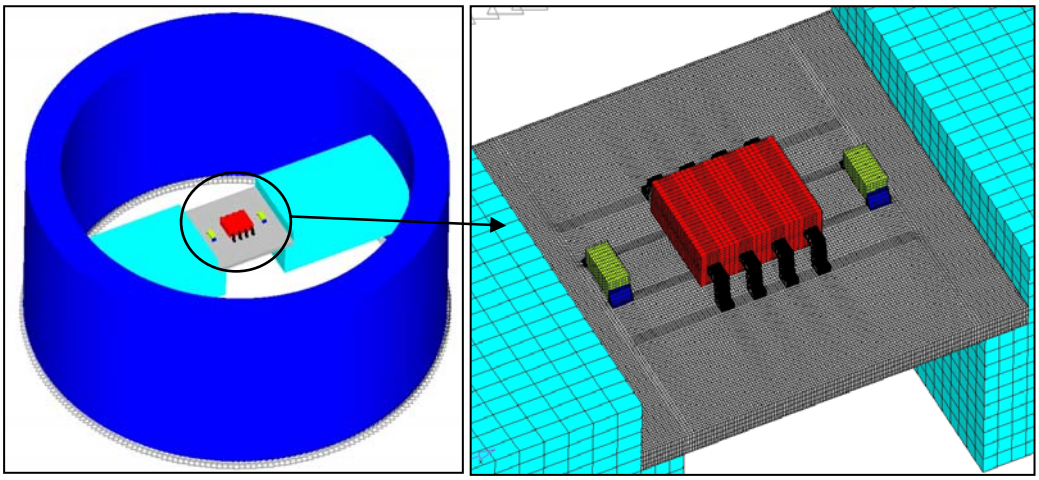

Figure 1. Finite element model layout with electronic chip.

The full baseline model uses 116,000 elements, with 47,000 elements comprising the chip. "Tied surface" contact is used at the interface between the chip and the support. All material properties are linear elastic and are summarized in table 1. The loading is applied by prescribing the velocity of the nodes on the lower surface of the outer ring. The velocity-time history is shown in figure 2. The defined termination time for the model is 1.4 ms. This time span was chosen so that the model would execute in a reasonable amount of time on available hardware. The initial time step is 4.24×10^{-9} seconds. The model requires more than 200,000 time steps to complete the analysis.

Table 1. Material properties of model components.

	Density ($lb \cdot s^2/in^4$)	Modulus (Msi[1])	Poisson's Ratio
Ring and Support	$7.33x10^{-4}$	30.0	0.3
Board	$1.48x10^{-4}$	28.6	0.14
Chip (AD623)	$1.14x10^{-4}$	2.31	0.25
Chip Leads	$3.55x10^{-4}$	17.5	0.3
Capacitor	$1.31x10^{-4}$	15.1	0.17
Solder Cap	$7.98x10^{-4}$	5.2	0.4

[1]Msi = millions of psi

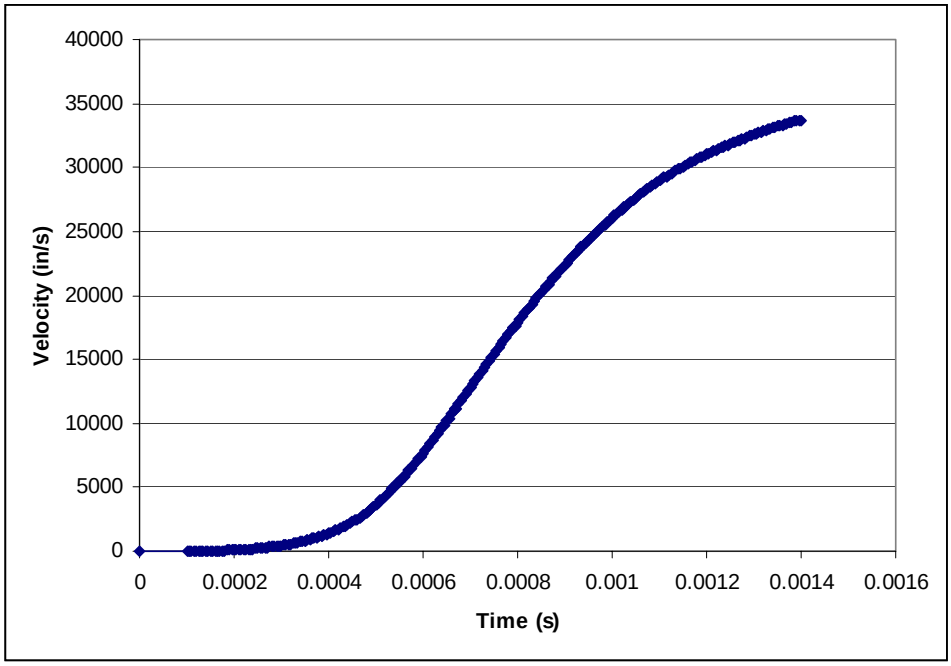

Figure 2. Velocity load curve applied to base of support ring.

The global model uses the mesh from the baseline model for the outer ring and supports and is shown in figure 3. The geometry of the chip is replaced with a coarser mesh of shell elements with offset contact used to maintain the centerline location of the board with respect to the support structure. The shell elements are defined to have the thickness of the board. Discrete mass elements are attached to nodes at the approximate locations of the lead attachment points. The mass of these elements is distributed to match the total mass of the capacitors and the chip. The total number of elements in the global model is 70,000. It is assumed that the stiffness of the chip does not appreciably affect the overall response of the structure away from the chip location.

As an additional consideration, the time-dependent fidelity of the boundary conditions that are applied to the submodel is known to affect the results (*3*). To determine these effects, two different sets of results are extracted from the global model and are subsequently used as boundary conditions for the submodel. Specifically, 100 and 1000 result states are used as input. This has the effect of essentially using two load curves that are discretized at different time intervals, $1.4x10^{-5}$ seconds and $1.4x10^{-6}$ seconds, respectively, for the different number of results states.

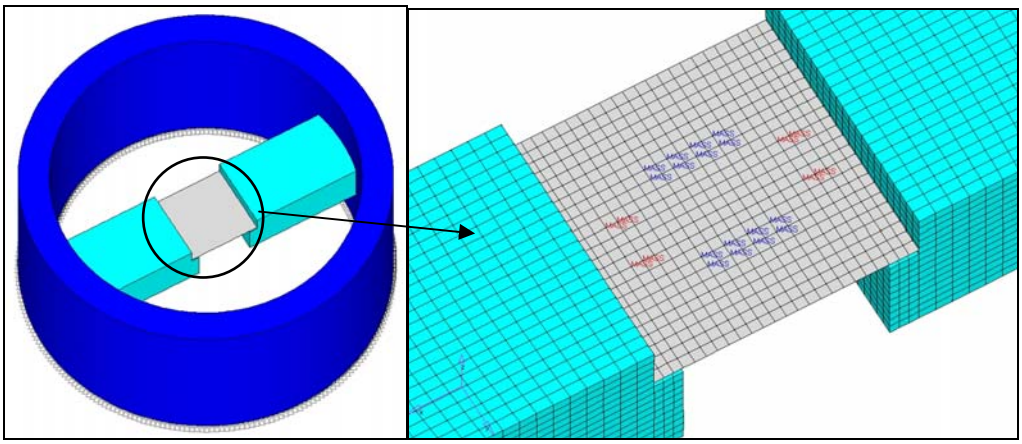

Figure 3. Global model with coarse representation of board.

The submodel consists of the detailed geometry of the electronics package and a small adjacent section of the supports. The domain of the submodel is shown in figure 4. As mentioned, the displacement results from the global model were applied along the outer edges of the supports.

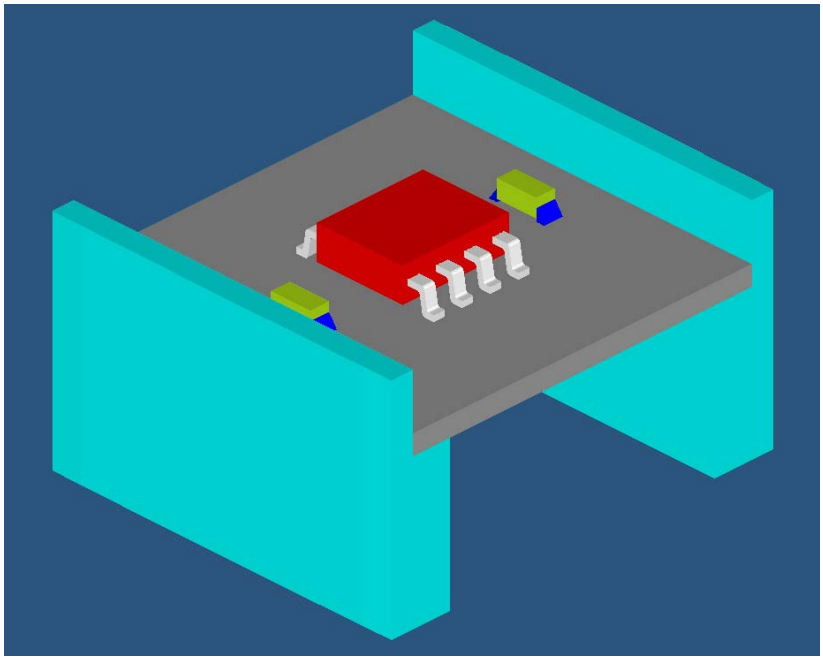

Figure 4. Submodel domain.

3. Results

All analyses were run on an SGI (Silicon Graphics, Inc.) Origin 3900. The baseline model was analyzed with 32 processors and took approximately 1,100 total CPU (central processing unit) hours (or about 34 hours/CPU). The global model was run on a single processor and took 6 CPU

hours. The two submodel analyses, one using 100 global result states and the other using 1000 states, took approximately 900 total CPU hours each on 32 processors (or about 28 hours/CPU). For this model, the overall reduction in analysis time was not significant.

The results from the two submodel cases are compared to the baseline model as shown in figure 5. Figure 5 shows contour plots of the Von Mises stress at time t = 0.6 ms for the three cases. For this geometry, the highest stress is in the leads. Figure 6 compares the stress-time history for a representative element in a lead. The results for both submodels are generally in good agreement with the global model, but the stress peaks for the 100-point case overshoot the global model. The 1000-point results match the peaks and valleys of the global model better. The reason for the difference in the results is entirely attributable to the use of a coarser loading function in the case of the 100-point curve versus the 1000-point curve.

It is known *a priori* that the submodeling technique might introduce high frequency content into the solution, but it is unknown how the solution would be affected. A fast Fourier transform (FFT) was performed on the data in figure 6 and is presented in figure 7. An FFT assumes the data to be periodic, but the data are finite in length, which causes error because of leakage (*4*). Non-zero values in the data at the starting and ending times create jumps in the data when they are expanded from a finite time to become periodic. These jumps create spurious, non-physical frequencies in the FFT. These spurious frequencies can be minimized with the use of a window on the data to force the starting and ending times of the signal to be zero so that no jumps appear in the periodic representation. For this study, a Hamming window was applied to the data before the FFT was calculated. While the frequency content of the response below 10 KHz matches very well, the time resolution for the loading function for the submodel introduces high frequency response into the solution for both cases.

4. Conclusions

The submodeling analysis technique in ABAQUS has been shown to be applicable to dynamics analysis involving electronic components. While submodeling can lead to artificial high frequency content in the final results, proper care in selecting the frequency of global model output can minimize these effects. As shown in the sample problem, sufficient accuracy in the stress results of the submodel can be realized if we consider the desired frequency response range. If we subsequently sample the global loading finely enough, any high frequency content introduced will be above the frequency range of interest.

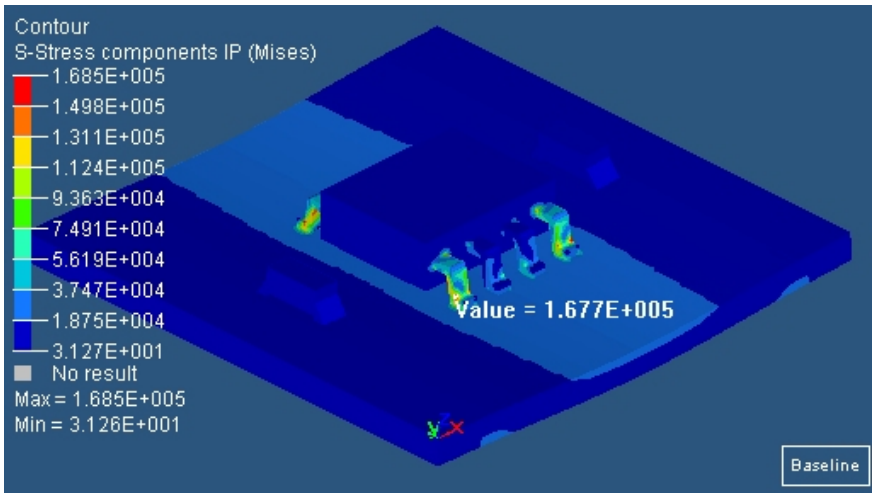

(a)

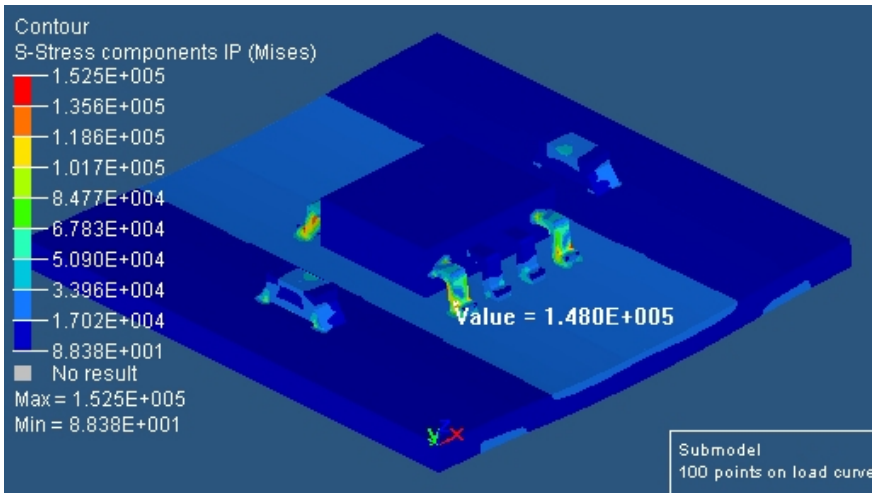

(b)

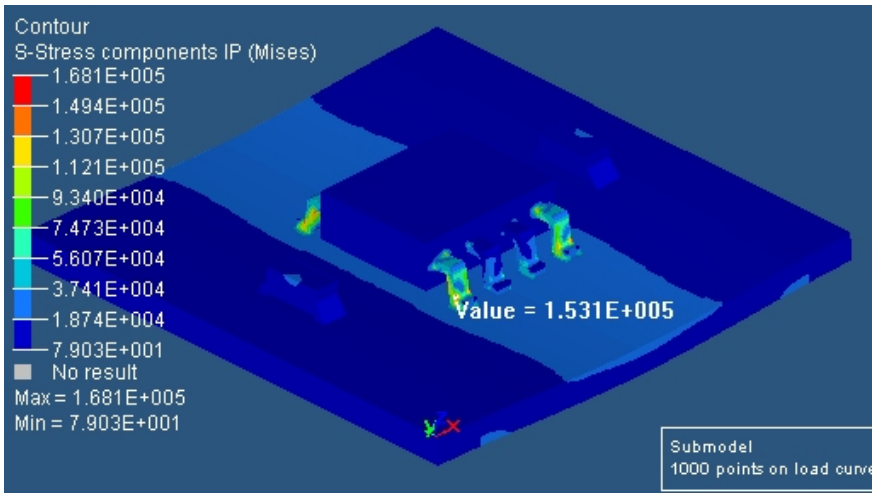

(c)

Figure 5. Contour plots of Von Mises stress (psi) at t = 0.6 ms for (a) the baseline case, (b) 100-point load curve, and (c) 1000-point load curve.

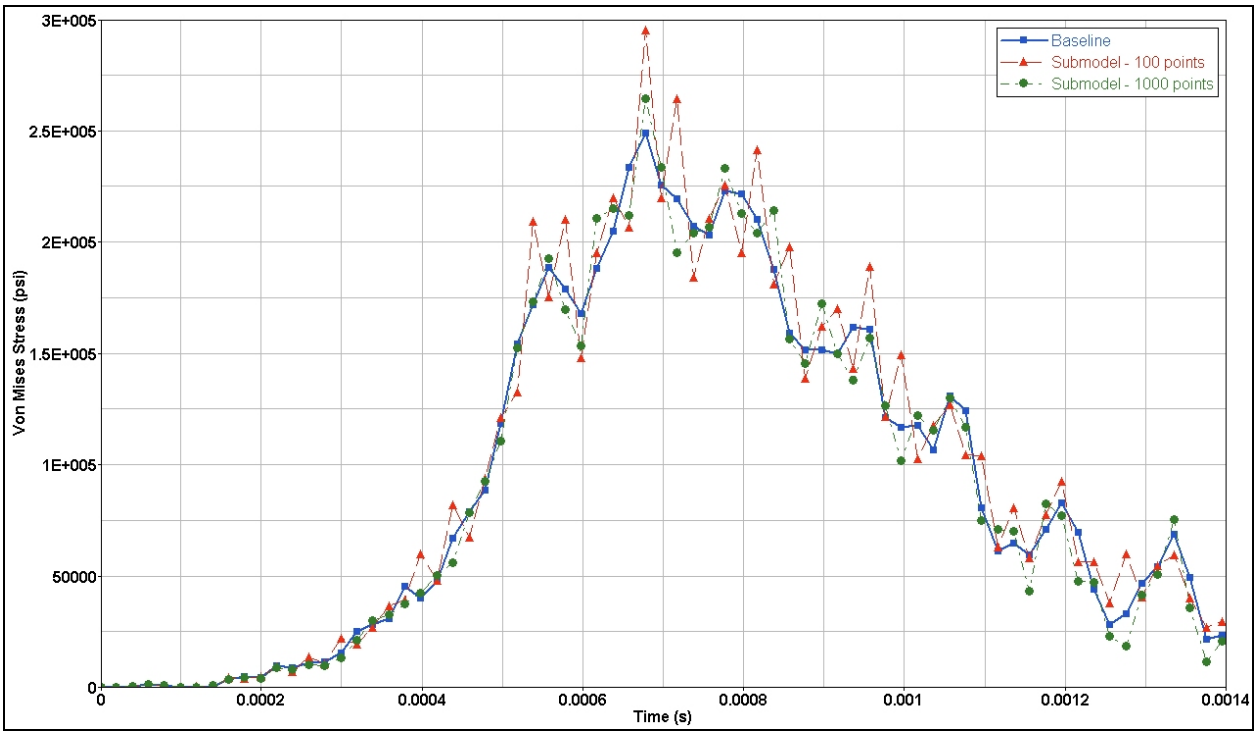

Figure 6. Comparison of the Von Mises stress in a representative element in a lead for the baseline case and the two submodels.

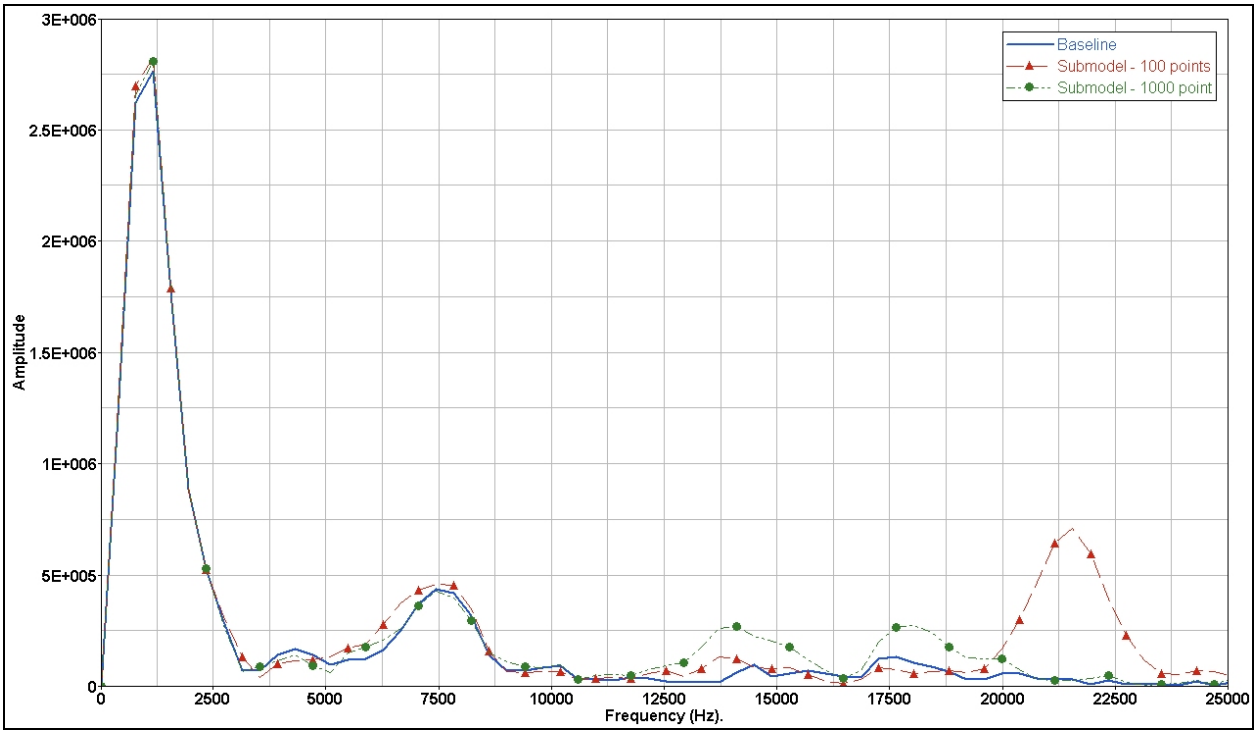

Figure 7. FFTs of data from figure 6.

5. References

1. Hughes, T.R.J. The Finite Element Method: Linear Static and Dynamic Finite Element Analysis. Prentice-Hall: Englewood Cliffs, NJ, 1987.
2. Minnicino, M.; D. Hopkins. *Overview of Reduction Methods and Their Implementation into Finite Element Local-to-Global Techniques*; ARL-TR-3340; U.S. Army Research Laboratory: Aberdeen Proving Ground, MD, September 2004.
3. ABAQUS Analysis User's Manual Version 6.4, 2003.
4. Ewins, D. J. Modal Testing: Theory and Practice. Research Studies Press: Letchworth, England, 1984.

NO. OF COPIES ORGANIZATION

1 (PDF ONLY) DEFENSE TECHNICAL INFORMATION CTR
DTIC OCA
8725 JOHN J KINGMAN RD
STE 0944
FORT BELVOIR VA 22060-6218

1 US ARMY RSRCH DEV & ENGRG CMD
SYSTEMS OF SYSTEMS INTEGRATION
AMSRD SS T
6000 6TH ST STE 100
FORT BELVOIR VA 22060-5608

1 INST FOR ADVNCD TCHNLGY
THE UNIV OF TEXAS AT AUSTIN
3925 W BRAKER LN STE 400
AUSTIN TX 78759-5316

1 DIRECTOR
US ARMY RESEARCH LAB
IMNE ALC IMS
2800 POWDER MILL RD
ADELPHI MD 20783-1197

1 DIRECTOR
US ARMY RESEARCH LAB
AMSRD ARL CI OK TL
2800 POWDER MILL RD
ADELPHI MD 20783-1197

2 DIRECTOR
US ARMY RESEARCH LAB
AMSRD ARL CS OK T
2800 POWDER MILL RD
ADELPHI MD 20783-1197

1 DIRECTOR
US ARMY RESEARCH LAB
ATTN AMSRD ARL SE DE R ATKINSON
2800 POWDER MILL RD
ADELPHI MD 20783-1197

6 DIR US ARMY RESEARCH LAB
ATTN AMSRD ARL WM MB T LI
A ABRAHAMIAN M BERMAN
M CHOWDHURY A FRYDMAN
E SZYMANSKI
2800 POWDER MILL RD
ADELPHI MD 20783-1197

NO. OF COPIES ORGANIZATION

1 US ARMY RSRCH DEV & ENG CMD
SYSTEMS OF SYSTEMS INTEGRATION
ATTN AMSRD SS T
6000 6TH ST STE 100
FORT BELVOIR VA 22060-5608

1 COMMANDER
US ARMY MATERIEL CMD
ATTN AMXMI INT
5001 EISENHOWER AVE
ALEXANDRIA VA 22333-0001

3 PM MAS
ATTN SFAE AMO MAS
SFAE AMO MAS MC
CHIEF ENGINEER
PICATINNY ARSENAL NJ 07806-5000

2 PM MAS
ATTN SFAE AMO MAS PS
SFAE AMO MAS LC
PICATINNY ARSENAL NJ 07806-5000

1 CDR US ARMY ARDEC
ATTN AMSTA AR CC COL JENKER
PICATINNY ARSENAL NJ 07806-5000

1 CDR US ARMY ARDEC
ATTN AMSTA AR FSE
PICATINNY ARSENAL NJ 07806-5000

1 CDR US ARMY ARDEC
ATTN AMSTA AR TD
PICATINNY ARSENAL NJ 07806-5000

7 CDR US ARMY ARDEC
ATTN AMSTA AR CCH A D VO
F ALTAMURA M NICOLICH
M PALATHINGUL R HOWELL
A VELLA M YOUNG
PICATINNY ARSENAL NJ 07806-5000

6 CDR US ARMY ARDEC
ATTN AMSTA AR CCH A L MANOLE
S MUSALLI R CARR M LUCIANO
E LOGSDEN T LOUZEIRO
PICATINNY ARSENAL NJ 07806-5000

NO. OF COPIES ORGANIZATION

1 CDR US ARMY ARDEC
ATTN AMSTA AR CCH P J LUTZ
PICATINNY ARSENAL NJ 07806-5000

1 CDR US ARMY ARDEC
ATTN AMSTA AR FSF T C LIVECCHIA
PICATINNY ARSENAL NJ 07806-5000

1 CDR US ARMY ARDEC
ATTN AMSTA ASF
PICATINNY ARSENAL NJ 07806-5000

1 CDR US ARMY ARDEC
ATTN AMSTA AR QAC T C J PAGE
PICATINNY ARSENAL NJ 07806-5000

1 CDR US ARMY ARDEC
ATTN AMSTA AR M D DEMELLA
PICATINNY ARSENAL NJ 07806-5000

3 CDR US ARMY ARDEC
ATTN AMSTA AR FSA A WARNASH
B MACHAK M CHIEFA
PICATINNY ARSENAL NJ 07806-5000

2 CDR US ARMY ARDEC
ATTN AMSTA AR FSP G M SCHIKSNIS
D CARLUCCI
PICATINNY ARSENAL NJ 07806-5000

2 CDR US ARMY ARDEC
ATTN AMSTA AR CCH C H CHANIN
S CHICO
PICATINNY ARSENAL NJ 07806-5000

1 CDR US ARMY ARDEC
ATTN AMSTA AR QAC T D RIGOGLIOSO
PICATINNY ARSENAL NJ 07806-5000

1 CDR US ARMY ARDEC
ATTN AMSTA AR WEL F M GUERRIERE
PICATINNY ARSENAL NJ 07806-5000

9 CDR US ARMY ARDEC
ATTN AMSTA AR CCH B P DONADIA
F DONLON P VALENTI
C KNUTSON G EUSTICE
K HENRY J MCNABOC
R SAYER F CHANG
PICATINNY ARSENAL NJ 07806-5000

1 PM ARMS
ATTN SFAE GCSS ARMS
BLDG 171
PICATINNY ARSENAL NJ 07806-5000

NO. OF COPIES ORGANIZATION

1 CDR US ARMY ARDEC
ATTN AMSTA AR WEA J BRESCIA
PICATINNY ARSENAL NJ 07806-5000

1 CDR US ARMY TACOM
PM COMBAT SYSTEMS
ATTN SFAE GCS CS
6501 ELEVEN MILE RD
WARREN MI 48397-5000

1 CDR US ARMY TACOM
PM SURVIVABLE SYSTEMS
ATTN SFAE GCSS W GSI H M RYZYI
6501 ELEVEN MILE RD
WARREN MI 48397-5000

1 CDR US ARMY TACOM
CHIEF ABRAMS TESTING
ATTN SFAE GCSS W AB QT
T KRASKIEWICZ
6501 ELEVEN MILE RD
WARREN MI 48397-5000

1 COMMANDER
US ARMY TACOM
ATTN AMSTA SF
WARREN MI 48397-5000

1 DIR AIR FORCE RSCH LAB
ATTN MLLMD D MIRACLE
2230 TENTH ST
WRIGHT PATTERSON AFB OH 45433-7817

1 OFC OF NAVAL RESEARCH
ATTN J CHRISTODOULOU
ONR CODE 332
800 N QUINCY ST
ARLINGTON VA 22217-5600

1 CDR WATERVLIET ARSENAL
ATTN SMCWV QAE Q B VANINA
BLDG 44
WATERVLIET NY 12189-4050

2 HQ IOC TANK
AMMUNITION TEAM
ATTN AMSIO SMT R CRAWFORD
W HARRIS
ROCK ISLAND IL 61299-6000

2 COMMANDER
US ARMY AMCOM
AVIATION APPLIED TECH DIR
ATTN J SCHUCK
FORT EUSTIS VA 23604-5577

NO. OF COPIES ORGANIZATION

1 NSWC
DAHLGREN DIV CODE G06
DAHLGREN VA 22448

2 US ARMY CORPS OF ENGINEERS
ATTN CERD C T LIU
CEW ET T TAN
20 MASSACHUSETTS AVE NW
WASHINGTON DC 20314

1 US ARMY COLD REGIONS
RSCH & ENGRNG LAB
ATTN P DUTTA
72 LYME RD
HANOVER NH 03755

4 CDR US ARMY TACOM
ATTN AMSTA TR R R MCCLELLAND
D THOMAS J BENNETT
D HANSEN
WARREN MI 48397-5000

4 CDR US ARMY TACOM
ATTN AMSTA JSK S GOODMAN
J FLORENCE D TEMPLETON
A SCHUMACHER
WARREN MI 48397-5000

5 CDR US ARMY TACOM
ATTN AMSTA TR D D OSTBERG
L HINOJOSA B RAJU
AMSTA CS SF H HUTCHINSON
F SCHWARZ
WARREN MI 48397-5000

6 BENET LABS
ATTN AMSTA AR CCB R FISCELLA
M SOJA E KATHE G FRIAR
M SCAVULO G SPENCER
WATERVLIET NY 12189-4050

4 BENET LABS
ATTN AMSTA AR CCB P WHEELER
S KRUPSKI J VASILAKIS
R HASENBEIN
WATERVLIET NY 12189-4050

4 BENET LABS
ATTN AMSTA CCB R S SOPOK
E HYLAND D CRAYON
R DILLON
WATERVLIET NY 12189-4050

NO. OF COPIES ORGANIZATION

1 USA SBCCOM PM SOLDIER SPT
ATTN AMSSB PM RSS A J CONNORS
KANSAS ST
NATICK MA 01760-5057

1 NSWC
TECH LIBRARY CODE B60
17320 DAHLGREN RD
DAHLGREN VA 22448

2 USA SBCCOM
MATERIAL SCIENCE TEAM
ATTN AMSSB RSS J HERBERT
M SENNETT
KANSAS ST
NATICK MA 01760-5057

2 OFC OF NAVAL RESEARCH
ATTN D SIEGEL CODE 351 J KELLY
800 N QUINCY ST
ARLINGTON VA 22217-5660

1 NSWC
CRANE DIVISION
M JOHNSON CODE 20H4
LOUISVILLE KY 40214-5245

2 NSWC
ATTN U SORATHIA
C WILLIAMS CODE 6551
9500 MACARTHUR BLVD
WEST BETHESDA MD 20817

2 CDR NSWC
CARDEROCK DIVISION
ATTN R PETERSON CODE 2020
M CRITCHFIELD CODE 1730
BETHESDA MD 20084

4 DIR US ARMY NGIC
ATTN D LEITER MS 404
J GASTON MS 301
M HOLTUS MS 301
M WOLFE MS 307
2055 BOULDERS RD
CHARLOTTESVILLE VA 22911-8318

4 DIR US ARMY NGIC
ATTN S MINGLEDORF MS 504
W GSTATTENBAUER MS 304
R WARNER MS 305
J CRIDER MS 306
2055 BOULDERS RD
CHARLOTTESVILLE VA 22911-8318

NO. OF COPIES ORGANIZATION

1 NAVAL SEA SYSTEMS CMD
ATTN D LIESE
1333 ISAAC HULL AVE SE 1100
WASHINGTON DC 20376-1100

4 US ARMY SBCCOM
SOLDIER SYSTEMS CTR
BALLISTICS TEAM
ATTN J WARD W ZUKAS
P CUNNIFF J SONG
KANSAS ST
NATICK MA 01760-5019

3 US ARMY SBCCOM
SOLDIER SYSTEMS CTR
MARINE CORPS TEAM J MACKIEWICZ
ATTN AMSSB RCP SS W NYKVIST
S BEAUDOIN
KANSAS ST
NATICK MA 01760-5019

7 US ARMY RESEARCH OFC
ATTN A CROWSON H EVERITT
J PRATER G ANDERSON
D STEPP D KISEROW J CHANG
PO BOX 12211
RSCH TRIANGLE PARK NC 27709-2211

1 AFRL MLBC
2941 P ST RM 136
WRIGHT PATTERSON AFB OH 45433-7750

1 DIRECTOR
LOS ALAMOS NATL LAB
ATTN F L ADDESSIO T 3 MS 5000
PO BOX 1633
LOS ALAMOS NM 87545

4 NSWC
ATTN J FRANCIS CODE G30
D WILSON CODE G32
R D COOPER CODE G32
J FRAYSSE CODE G33
DAHLGREN VA 22448

4 NSWC
ATTN T DURAN CODE G33
L DE SIMONE CODE G33
R HUBBARD CODE G33
DAHLGREN VA 22448

NO. OF COPIES ORGANIZATION

1 NSWC
CARDEROCK DIVISION
R CRANE CODE 6553
9500 MACARTHUR BLVD
WEST BETHESDA MD 20817-5700

1 AFRL MLSS
ATTN R THOMSON
2179 12TH ST RM 122
WRIGHT PATTERSON AFB OH 45433-7718

2 AFRL
ATTN F ABRAMS J BROWN
BLDG 653
2977 P ST STE 6
WRIGHT PATTERSON AFB OH 45433-7739

5 DIR LAWRENCE LIVERMORE NATL LAB
ATTN R CHRISTENSEN
S DETERESA F MAGNESS
M FINGER MS 313
M MURPHY L 282
PO BOX 808
LIVERMORE CA 94550

1 AFRL MLS OL
ATTN L COULTER
5851 F AVE
BLDG 849 RM AD1A
HILL AFB UT 84056-5713

1 OSD
JOINT CCD TEST FORCE
ATTN OSD JCCD R WILLIAMS
3909 HALLS FERRY RD
VICKSBURG MS 29180-6199

3 DARPA
ATTN M VANFOSSEN S WAX
L CHRISTODOULOU
3701 N FAIRFAX DR
ARLINGTON VA 22203-1714

3 OAK RIDGE NATL LAB
ATTN R M DAVIS
C EBERLE MS 8048
C D WARREN MS 8039
PO BOX 2008
OAK RIDGE TN 37831-6195

NO. OF COPIES ORGANIZATION

3 DIR SANDIA NATL LABS
APPLIED MECHS DEPT
ATTN MS 9042 J HANDROCK
Y R KAN J LAUFFER
PO BOX 969
LIVERMORE CA 94551-0969

4 NIST
ATTN M VANLANDINGHAM MS 8621
J CHIN MS 8621
J MARTIN MS 8621
D DUTHINH MS 8611
100 BUREAU DR
GAITHERSBURG MD 20899

1 HYDROGEOLOGIC INC
ATTN SERDP ESTCP SPT OFC S WALSH
1155 HERNDON PKWY STE 900
HERNDON VA 20170

3 NASA LANGLEY RSCH CAR
ATTN AMSRD ARL VT
W ELBER MS 266
F BARTLETT JR MS 266
G FARLEY MS 266
HAMPTON VA 23681-0001

1 FHWA
ATTN E MUNLEY
6300 GEORGETOWN PIKE
MCLEAN VA 22101

1 USDOT FEDERAL RAILROAD
ATTN M FATEH RDV 31
WASHINGTON DC 20590

3 CYTEC FIBERITE
ATTN R DUNNE D KOHLI
R MAYHEW
1300 REVOLUTION ST
HAVRE DE GRACE MD 21078

1 DIR NGIC
ATTN IANG TMT
2055 BOULDERS RD
CHARLOTTESVILLE VA 22911-8318

2 3TEX CORP
ATTN A BOGDANOVICH
J SINGLETARY
109 MACKENAN DR
CARY NC 27511

NO. OF COPIES ORGANIZATION

1 DIR DEFENSE INTLGNC AGENCY
TA 5
ATTN K CRELLING
WASHINGTON DC 20310

1 COMPOSITE MATERIALS INC
ATTN D SHORTT
19105 63 AVE NE
PO BOX 25
ARLINGTON WA 98223

1 JPS GLASS
ATTN L CARTER
PO BOX 260
SLATER RD
SLATER SC 29683

1 COMPOSITE MATERIALS INC
ATTN R HOLLAND
11 JEWEL CT
ORINDA CA 94563

1 COMPOSITE MATERIALS INC
ATTN C RILEY
14530 S ANSON AVE
SANTA FE SPRINGS CA 90670

1 SIMULA
ATTN R HUYETT
10016 S 51ST ST
PHOENIX AZ 85044

2 PROTECTION MATERIALS INC
ATTN M MILLER F CRILLEY
14000 NW 58 CT
MIAMI LAKES FL 33014

2 FOSTER MILLER
ATTN M ROYLANCE W ZUKAS
195 BEAR HILL RD
WALTHAM MA 02354-1196

1 ROM DEVELOPMENT CORP
ATTN R O MEARA
136 SWINEBURNE ROW
BRICK MARKET PLACE
NEWPORT RI 02840

2 TEXTRON SYSTEMS
ATTN M TREASURE T FOLTZ
1449 MIDDLESEX ST
LOWELL MA 01851

NO. OF COPIES ORGANIZATION

1 O GARA HESS & EISENHARDT
ATTN M GILLESPIE
9113 LESAINT DR
FAIRFIELD OH 45014

1 MILLIKEN RESEARCH CORP
ATTN M MACLEOD
PO BOX 1926
SPARTANBURG SC 29303

1 CONNEAUGHT INDUSTRIES INC
ATTN J SANTOS
PO BOX 1425
COVENTRY RI 02816

1 ARMTEC DEFENSE PRODUCTS
ATTN S DYER
85 901 AVE 53
PO BOX 848
COACHELLA CA 92236

3 PACIFIC NORTHWEST LAB
ATTN M SMITH G VAN ARSDALE
R SHIPPELL
PO BOX 999
RICHLAND WA 99352

1 ALLIANT TECHSYSTEMS INC
4700 NATHAN LN N
PLYMOUTH MN 55442-2512

1 APPLIED COMPOSITES
ATTN W GRISCH
333 NORTH SIXTH ST
ST CHARLES IL 60174

1 CUSTOM ANALYTICAL
ENG SYS INC
ATTN A ALEXANDER
13000 TENSOR LANE NE
FLINTSTONE MD 21530

1 AAI CORP
ATTN DR N B MCNELLIS
PO BOX 126
HUNT VALLEY MD 21030-0126

1 OFC DEPUTY UNDER SEC DEFNS
ATTN J THOMPSON
1745 JEFFERSON DAVIS HWY
CRYSTAL SQ 4 STE 501
ARLINGTON VA 22202

NO. OF COPIES ORGANIZATION

3 ALLIANT TECHSYSTEMS INC
ATTN J CONDON E LYNAM
J GERHARD
WV01 16 STATE RT 956
PO BOX 210
ROCKET CENTER WV 26726-0210

1 PROJECTILE TECHNOLOGY INC
515 GILES ST
HAVRE DE GRACE MD 21078

1 PRATT & WHITNEY
ATTN C WATSON
400 MAIN ST MS 114 37
EAST HARTFORD CT 06108

5 NORTHROP GRUMMAN
ATTN B IRWIN K EVANS
D EWART J MCGLYNN
A SHREKENHAMER
BLDG 160 DEPT 3700
1100 W HOLLYVALE ST
AZUSA CA 91701

1 BRIGS COMPANY
ATTN J BACKOFEN
2668 PETERBOROUGH ST
HERNDON VA 22071-2443

1 ZERNOW TECHNICAL SERVICES
ATTN L ZERNOW
425 W BONITA AVE STE 208
SAN DIMAS CA 91773

2 GENERAL DYNAMICS OTS
FLINCHBAUGH DIV
ATTN K LINDE T LYNCH
PO BOX 127
RED LION PA 17356

1 GKN WESTLAND AEROSPACE
ATTN D OLDS
450 MURDOCK AVE
MERIDEN CT 06450-8324

1 BOEING ROTORCRAFT
ATTN P HANDEL
800 B PUTNAM BLVD
WALLINGFORD PA 19086

NO. OF COPIES ORGANIZATION

5 SIKORSKY AIRCRAFT
ATTN G JACARUSO J ADELMANN
T CARSTENSAN B KAY
S GARBO MS S330A
6900 MAIN ST
PO BOX 9729
STRATFORD CT 06497-9729

1 AEROSPACE CORP
ATTN G HAWKINS M4 945
2350 E EL SEGUNDO BLVD
EL SEGUNDO CA 90245

2 CYTEC FIBERITE
ATTN M LIN W WEB
1440 N KRAEMER BLVD
ANAHEIM CA 92806

2 UDLP
ATTN G THOMAS M MACLEAN
PO BOX 58123
SANTA CLARA CA 95052

2 UDLP
ATTN R BRYNSVOLD
P JANKE MS 170
4800 E RIVER RD
MINNEAPOLIS MN 55421-1498

1 LOCKHEED MARTIN
SKUNK WORKS
ATTN D FORTNEY
1011 LOCKHEED WAY
PALMDALE CA 93599-2502

1 NORTHRUP GRUMMAN CORP
ELECTRONIC SENSORS & SYSTEMS DIV
ATTN E SCHOCH MS V 16
1745A W NURSERY RD
LINTHICUM MD 21090

1 GDLS DIVISION
ATTN D BARTLE
PO BOX 1901
WARREN MI 48090

2 GDLS
ATTN D REES M PASIK
PO BOX 2074
WARREN MI 48090-2074

NO. OF COPIES ORGANIZATION

1 GDLS
MUSKEGON OPER
ATTN M SOIMAR
76 GETTY ST
MUSKEGON MI 49442

1 GENERAL DYNAMICS
AMPHIBIOUS SYS
SURVIVABILITY LEAD
ATTN G WALKER
991 ANNAPOLIS WAY
WOODBRIDGE VA 22191

6 INST FOR ADVANCED TECH
ATTN H FAIR I MCNAB
P SULLIVAN S BLESS
W REINECKE C PERSAD
3925 W BRAKER LN STE 400
AUSTIN TX 78759-5316

1 ARROW TECH ASSOC
1233 SHELBURNE RD STE D8
SOUTH BURLINGTON VT 05403-7700

1 R EICHELBERGER
CONSULTANT
409 W CATHERINE ST
BEL AIR MD 21014-3613

1 SAIC
ATTN G CHRYSSOMALLIS
8500 NORMANDALE LAKE BLVD
SUITE 1610
BLOOMINGTON MN 55437-3828

1 UCLA MANE DEPT ENGR IV
ATTN H T HAHN
LOS ANGELES CA 90024-1597

1 UMASS LOWELL
PLASTICS DEPT
ATTN N SCHOTT
1 UNIVERSITY AVE
LOWELL MA 01854

1 IIT RESEARCH CAR
ATTN D ROSE
201 MILL ST
ROME NY 13440-6916

1 GA TECH RESEARCH INST
GA INST OF TCHNLGY
ATTN P FRIEDERICH
ATLANTA GA 30392

NO. OF
COPIES ORGANIZATION

1 MICHIGAN ST UNIV
MSM DEPT
ATTN R AVERILL
3515 EB
EAST LANSING MI 48824-1226

1 PENN STATE UNIV
ATTN R S ENGEL
245 HAMMOND BLDG
UNIVERSITY PARK PA 16801

1 PENN STATE UNIV
ATTN C BAKIS
212 EARTH ENGR
SCIENCES BLDG
UNIVERSITY PARK PA 16802

1 PURDUE UNIV
SCHOOL OF AERO & ASTRO
ATTN C T SUN
W LAFAYETTE IN 47907-1282

1 UNIV OF MAINE
ADV STR & COMP LAB
ATTN R LOPEZ ANIDO
5793 AEWC BLDG
ORONO ME 04469-5793

1 JOHNS HOPKINS UNIV
APPLIED PHYSICS LAB
ATTN P WIENHOLD
11100 JOHNS HOPKINS RD
LAUREL MD 20723-6099

1 UNIV OF DAYTON
ATTN J M WHITNEY
COLLEGE PARK AVE
DAYTON OH 45469-0240

5 UNIV OF DELAWARE
CTR FOR COMPOSITE MTRLS
ATTN J GILLESPIE M SANTARE
S YARLAGADDA S ADVANI
D HEIDER
201 SPENCER LAB
NEWARK DE 19716

1 DEPT OF MTRLS
SCIENCE & ENGRG
UNIV OF IL AT URBANA-CHAMPAIGN
ATTN J ECONOMY
1304 W GREEN ST 115B
URBANA IL 61801

NO. OF
COPIES ORGANIZATION

1 MISSISSIPPI STATE UNIV
DEPT OF AEROSPACE ENGRG
ATTN A J VIZZINI
MISSISSIPPI STATE MS 39762

1 DREXEL UNIV
ATTN A S D WANG
3141 CHESTNUT ST
PHILADELPHIA PA 19104

3 UNIV OF TEXAS AT AUSTIN
CAR FOR ELECTROMECHANICS
ATTN J PRICE A WALLS
J KITZMILLER
10100 BURNET RD
AUSTIN TX 78758-4497

1 SOUTHWEST RESEARCH INST
ENGR & MATL SCIENCES DIV
ATTN J RIEGEL
6220 CULEBRA RD
PO DRAWER 28510
SAN ANTONIO TX 78228-0510

ABERDEEN PROVING GROUND

1 DIRECTOR
US ARMY RSCH LABORATORY
ATTN AMSRD ARL CI OK TECH LIB
BLDG 4600

1 US ARMY ATC
ATTN CSTE DTC AT AC I W C FRAZER
BLDG 400

1 DIR USARL
ATTN AMSRD ARL CI
BLDG

1 DIR USARL
ATTN AMSRD ARL O AP EG M ADAMSON
BLDG

1 DIR USARL
ATTN AMSRD ARL SL BB D BELY
BLDG 328

2 DIR USARL
ATTN AMSRD ARL WM J SMITH
D LYON
BLDG 4600

NO. OF
COPIES ORGANIZATION

2 DIR USARL
ATTN AMSRD ARL WM B CHIEF
T KOGLER
BLDG 4600

2 DIR USARL
ATTN AMSRD ARL WM BC P PLOSTINS
J NEWILL
BLDG 390

3 DIR USARL
ATTN AMSRD ARL WM BD B FORCH
R PESCE-RODRIGUEZ B RICE
BLDG 4600

3 DIR USARL
ATTN AMSRD ARL WM BD P CONROY
C LEVERITT A ZIELINSKI
BLDG 390

2 DIR USARL
ATTN AMSRD ARL WM BE R LIEB
M LEADORE
BLDG 4600

1 DIR USARL
ATTN AMSRD ARL WM BF
S WILKERSON
BLDG 390

2 DIR USARL
ATTN AMSRD ARL WM M J MCCAULEY
S MCKNIGHT
BLDG 4600

2 DIR USARL
ATTN AMSRD ARL WM MA
L GHIORSE E WETZEL
BLDG 4600

22 DIR USARL
ATTN AMSRD ARL WM MB
J BENDER T BOGETTI
J BROWN L BURTON
R CARTER K CHO W DE ROSSET
G DEWING R DOWDING
W DRYSDALE R EMERSON
D GRAY D HOPKINS R KASTE
L KECSKES M MINNICINO
B POWERS D SNOHA
J SOUTH M STAKER
J SWAB J TZENG
BLDG 4600

NO. OF
COPIES ORGANIZATION

11 DIR USARL
ATTN AMSRD ARL WM MC J BEATTY
R BOSSOLI E CHIN
S CORNELISON D GRANVILLE
B HART J LASALVIA
J MONTGOMERY F PIERCE
E RIGAS W SPURGEON
BLDG 4600

11 DIR USARL
ATTN AMSRD ARL WM MD P DEHMER
B CHEESEMAN R DOOLEY
G GAZONAS S GHIORSE
M KLUSEWITZ W ROY J SANDS
S WALSH D SPAGNUOLO S WOLF
BLDG 4600

2 DIR USARL
ATTN AMSRD ARL WM RP J BORNSTEIN
C SHOEMAKER
BLDG 1121

1 DIR USARL
ATTN AMSRD ARL WM T B BURNS
BLDG 309

1 DIR USARL
ATTN AMSRD ARL WM TA W GILLICH
BLDG 309

7 DIR USARL
ATTN AMSRD ARL WM TA M BURKINS
B GOOCH T HAVEL C HOPPEL
E HORWATH J RUNYEON
M ZOLTOSKI
BLDG 393

1 DIR USARL
ATTN AMSRD ARL WM TB P BAKER
BLDG 309

1 DIR USARL
ATTN AMSRD ARL WM TC R COATES
BLDG 309

4 DIR USARL
ATTN AMSRD ARL WM TD D DANDEKAR
M RAFTENBERG S SCHOENFELD
T WEERASOORIYA
BLDG 4600

2 DIR USARL
ATTN AMSRD ARL WM TE CHIEF
J POWELL
BLDG 1116A

NO. OF COPIES ORGANIZATION

1 LTD
R MARTIN
MERL
TAMWORTH RD
HERTFORD SG13 7DG
UK

1 CIVIL AVIATION
ADMINSTRATION
T GOTTESMAN
PO BOX 8
BEN GURION INTRNL AIRPORT
LOD 70150
ISRAEL

1 AEROSPATIALE
S ANDRE
A BTE CC RTE MD132
316 ROUTE DE BAYONNE
TOULOUSE 31060
FRANCE

1 DRA FORT HALSTEAD
P N JONES
SEVEN OAKS KENT TN 147BP
UK

1 SWISS FEDERAL ARMAMENTS
WKS
W LANZ
ALLMENDSTRASSE 86
3602 THUN
SWITZERLAND

1 DYNAMEC RESEARCH LAB
AKE PERSSON
BOX 201
SE 151 23 SODERTALJE
SWEDEN

1 ISRAEL INST OF TECHLGY
S BODNER
FACULTY OF MECHANICAL
ENGR
HAIFA 3200
ISRAEL

1 DSTO
WEAPONS SYSTEMS DIVISION
N BURMAN RLLWS
SALISBURY
SOUTH AUSTRALIA 5108
AUSTRALIA

NO. OF COPIES ORGANIZATION

1 DEF RES ESTABLISHMENT
VALCARTIER
A DUPUIS
2459 BLVD PIE XI NORTH
VALCARTIER QUEBEC
CANADA
PO BOX 8800 COURCELETTE
GOA IRO QUEBEC
CANADA

1 ECOLE POLYTECH
J MANSON
DMX LTC
CH 1015 LAUSANNE
SWITZERLAND

1 TNO DEFENSE RESEARCH
R IJSSELSTEIN
ACCOUNT DIRECTOR
R&D ARMEE
PO BOX 6006
2600 JA DELFT
THE NETHERLANDS

2 FOA NATL DEFENSE RESEARCH
ESTAB
DIR DEPT OF WEAPONS &
PROTECTION
B JANZON
R HOLMLIN
S 172 90 STOCKHOLM
SWEDEN

2 DEFENSE TECH & PROC
AGENCY GROUND
I CREWTHER
GENERAL HERZOG HAUS
3602 THUN
SWITZERLAND

1 MINISTRY OF DEFENCE
RAFAEL
ARMAMENT DEVELOPMENT
AUTH
M MAYSELESS
PO BOX 2250
HAIFA 31021
ISRAEL

1 B HIRSCH
TACHKEMONY ST 6
NETAMUA 42611
ISRAEL

NO. OF
COPIES ORGANIZATION

1 DEUTSCHE AEROSPACE AG
DYNAMICS SYSTEMS
M HELD
PO BOX 1340
D 86523 SCHROBENHAUSEN
GERMANY