ARMY RESEARCH LABORATORY



Implementation of SEREP Into LLNL Dyna3d for Global/Local Analysis

by David A. Hopkins and Michael A. Minnicino II

ARL-TR-3569 August 2005

Approved for public release; distribution is unlimited.

AUTHENTICATED
U.S. GOVERNMENT
INFORMATION
GPO

NOTICES

Disclaimers

The findings in this report are not to be construed as an official Department of the Army position unless so designated by other authorized documents.

Citation of manufacturer's or trade names does not constitute an official endorsement or approval of the use thereof.

Destroy this report when it is no longer needed. Do not return it to the originator.

Army Research Laboratory
Aberdeen Proving Ground, MD 21005-5069

ARL-TR-3569 **August 2005**

Implementation of SEREP Into LLNL Dyna3d for Global/Local Analysis

David A. Hopkins and Michael A. Minnicino II
Weapons and Materials Research Directorate, ARL

Approved for public release; distribution is unlimited.

REPORT DOCUMENTATION PAGE	Form Approved OMB No. 0704-0188

Public reporting burden for this collection of information is estimated to average 1 hour per response, including the time for reviewing instructions, searching existing data sources, gathering and maintaining the data needed, and completing and reviewing the collection information. Send comments regarding this burden estimate or any other aspect of this collection of information, including suggestions for reducing the burden, to Department of Defense, Washington Headquarters Services, Directorate for Information Operations and Reports (0704-0188), 1215 Jefferson Davis Highway, Suite 1204, Arlington, VA 22202-4302. Respondents should be aware that notwithstanding any other provision of law, no person shall be subject to any penalty for failing to comply with a collection of information if it does not display a currently valid OMB control number.
PLEASE DO NOT RETURN YOUR FORM TO THE ABOVE ADDRESS.

1. REPORT DATE *(DD-MM-YYYY)*	2. REPORT TYPE	3. DATES COVERED (From - To)
August 2005	Final	1 October 2003–30 September 2004

4. TITLE AND SUBTITLE	5a. CONTRACT NUMBER
Implementation of SEREP Into LLNL Dyna3d for Global/Local Analysis	5b. GRANT NUMBER
	5c. PROGRAM ELEMENT NUMBER

6. AUTHOR(S)	5d. PROJECT NUMBER
David A. Hopkins and Michael A. Minnicino II	622618H80
	5e. TASK NUMBER
	5f. WORK UNIT NUMBER

7. PERFORMING ORGANIZATION NAME(S) AND ADDRESS(ES)	8. PERFORMING ORGANIZATION REPORT NUMBER
U.S. Army Research Laboratory ATTN: AMSRD-ARL-WM-MB Aberdeen Proving Ground, MD 21005-5069	ARL-TR-3569

9. SPONSORING/MONITORING AGENCY NAME(S) AND ADDRESS(ES)	10. SPONSOR/MONITOR'S ACRONYM(S)
	11. SPONSOR/MONITOR'S REPORT NUMBER(S)

12. DISTRIBUTION/AVAILABILITY STATEMENT

Approved for public release; distribution is unlimited.

13. SUPPLEMENTARY NOTES

14. ABSTRACT

Reduction methods are used to reduce the number of degrees of freedom in a finite-element (FE) model at the expense of high-fidelity solutions. The System Equivalent Reduction/Expansion Process (SEREP) is an attractive reduction technique since it can preserve the modal fidelity of the FE model up to a user-defined level. This capability allows for a more accurate representation of the physical structure. In this report, the feasibility of incorporating SEREP in the FE method for both discrete spring-mass-damper and distributed systems is explored. Modeling and numerical issues related to using SEREP as a superelement technique are examined and discussed.

15. SUBJECT TERMS

local, global, finite element, LLNL Dyna3d

16. SECURITY CLASSIFICATION OF:			17. LIMITATION OF ABSTRACT	18. NUMBER OF PAGES	19a. NAME OF RESPONSIBLE PERSON
a. REPORT	b. ABSTRACT	c. THIS PAGE			D. A. Hopkins
UNCLASSIFIED	UNCLASSIFIED	UNCLASSIFIED	UL	34	19b. TELEPHONE NUMBER (*Include area code*) 410-306-0764

Standard Form 298 (Rev. 8/98)
Prescribed by ANSI Std. Z39.18

Contents

List of Figures **iv**

1. Introduction **1**

2. SEREP Implementation **3**

3. Future Work **13**

4. References **14**

Distribution List **15**

List of Figures

Figure 1. Baseline model with (a) standard FE mesh and (b) SEREP reduced model. 3
Figure 2. SEREP as a multipoint constraint approach. 4
Figure 3. Simplified flow chart of SEREP implementation. 6
Figure 4. LLNL Dyna3d time step cycle. 7
Figure 5. Simple spring-mass model. 8
Figure 6. Baseline and local results of the discrete spring-mass system 9
Figure 7. Y Stress results of 3D model. Baseline model results using only subset of interface nodes. 10
Figure 8. Y Stress results of 3D model. SEREP model results using subset of interface nodes. 11
Figure 9. Principal stress at interface—baseline model. 11
Figure 10. Principal stress at interface—SEREP model. 12
Figure 11. Effective stress at interface using a tied interface. 13

1. Introduction

Modern smart munitions rely upon electronic assemblies (*1*). These assemblies are often fabricated from commercial-off-the-shelf components that are not specifically designed to endure the harsh loading environment of a gun launch. One method of qualifying these assemblies and components is to build the projectile prototypes and conduct live-fire tests until all design issues are resolved. This approach is cost prohibitive. Another approach is to simulate the launch environment using air guns. While less costly, there are still drawbacks, including acquiring test units, simulating the combined loading environment of both setback and spin, and obtaining loading profiles that match both the gun launch peak load as well as load duration. Finally, the finite-element (FE) modeling approach can be used to construct numerical models of the components.

While FE modeling allows numerous anticipated loading scenarios to be examined prior to actually testing hardware, issues related to the modeling process do arise. These issues include model fidelity, numerical accuracy, material properties, interface and other boundary conditions, and solution time. It would seem that in the design of smart munitions comprised of electronic components, we have simply traded cost issues associated with actual testing with numerical and other issues associated with the FE modeling process. To some extent, this view is correct, which is why any proposed design is rigorously tested in an actual gun launch environment prior to fielding. However, many of the modeling issues mentioned have been addressed by prior numerical studies such that, using reasonable engineering judgment, designs can be screened, thus reducing the required number of field tests. One issue that has not been addressed satisfactorily, though, is the time required to complete a numerical analysis of a highly detailed FE model.

It is now possible to include more details in the FE analysis with the enhanced pre/post-processing tools because of advances in FE modeling tools, analysis codes, and the increase in hardware computational capabilities. However, the inclusion of more details typically leads to longer analysis times. In fact, there is a continuing trend towards including as much of the "real" physics as possible in FE models. This conflicts with a designer's need for quick analysis turn-around times so that designs can be evaluated and improved.

Techniques such as Guyan reduction have been used for static analysis to reduce the computational cost associated with the analysis of large, complex models (*2*). These techniques have also been applied to transient analysis problems where inertial effects are important even though the applicability of these reduction techniques for this class of problems is questionable. Direct solutions, whether by implicit or explicit solvers, of the full model are thus often employed to avoid the questionable application of these numerical approximations on the time dependent solution, even though computational analysis time for these models is substantial

(*3*, *4*). The analysis time required for these models increases even more dramatically when the model length scales are highly disparate. For instance, a typical artillery round is on the order of one meter in length, while the capacitors used in the electronic components are on the order of millimeters or less in size. Inclusion of this small capacitor in the overall model is not feasible, since inclusion of these components in the model leads to excessive computational times, although it is the survivability of the electronic components that are of concern.

A possible resolution to this issue is to develop a global/local modeling approach where the response of the small components, the local model, can be captured without necessarily including detailed FE models of these small components in the global FE model of the projectile. This approach would thus not incur the computational penalty due to the small time steps required if the detailed FE local models were included, as in a baseline FE model. There are several variations to this global/local modeling. One approach is to replace small components and intricate structures with generic coarsely-meshed representations that have material properties that approximate the response of the actual local structure and occupy the same volume (*1*). The boundary conditions in these coarse representations may have significant errors, as well as other issues such as appropriate stiffness properties, mass densities and rotational inertia properties. A second approach is to represent the local model as a rigid body. This approach for the overall model can solve some of the issues previously mentioned, but introduces concerns about the behavior of stress waves at the interface between the elastic and rigid parts of the FE model. Still another approach is to simply replace the small components with lumped masses and ignore stiffness effects completely. While this approach doesn't preserve the volume requirements, it does work well for uniaxial response. Finally, superelement formulations and Guyan reduction, or similar techniques, can be used to convert a local model into an equivalent superelement.

These techniques can be grouped into static and dynamic reduction techniques (*5*). The static reduction techniques, such as Guyan reduction, omit the inertial effect and focus on the system stiffness. Similarly, the dynamic reduction techniques primarily focus on the inertial aspect of the system, but can also account for both the inertial and stiffness effects for a range of frequencies. Among these dynamic techniques, the system equivalent reduction expansion process (SEREP) is a technique that can both reduce the number of degrees of freedom (DOF) and maintain the correct dynamic structural response for a user-selected frequency range. SEREP has traditionally been used to aid in correlating modal test data and modal numerical models for FE modeling validation. However, the approach appears to be a viable method for representing the response of complex structures without incurring some of the deficiencies noted for other techniques. Details of the theory behind SEREP can be found in several papers (*6*). In this report, we describe a method for implementing SEREP into the Lawrence Livermore National Laboratory (LLNL) Dyna3d FE modeling software (*7*) to allow global/local analysis.

2. SEREP Implementation

The idea of the proposed approach is to replace portions of the global structure with their modal representations to achieve faster solution times by effectively increasing the characteristic time step. The difference between the SEREP approach and traditional modal analysis is that, while modal analysis solves the problem in terms of generalized modal DOF, SEREP reformulates the problem in terms of the physical DOF. Therefore, a FE model can be partitioned into sections represented as traditional FE meshes while other sections are represented by their SEREP approximations. Since both FE and SEREP formulations are in terms of the physical DOF, it is straightforward to relate the global and local DOF. To illustrate and clarify this distinction, consider the simple model shown in figure 1(a). This model was meshed traditionally, as seen in figure 1(a), and also using a mixed traditional-SEREP representation, seen in figure 1(b).

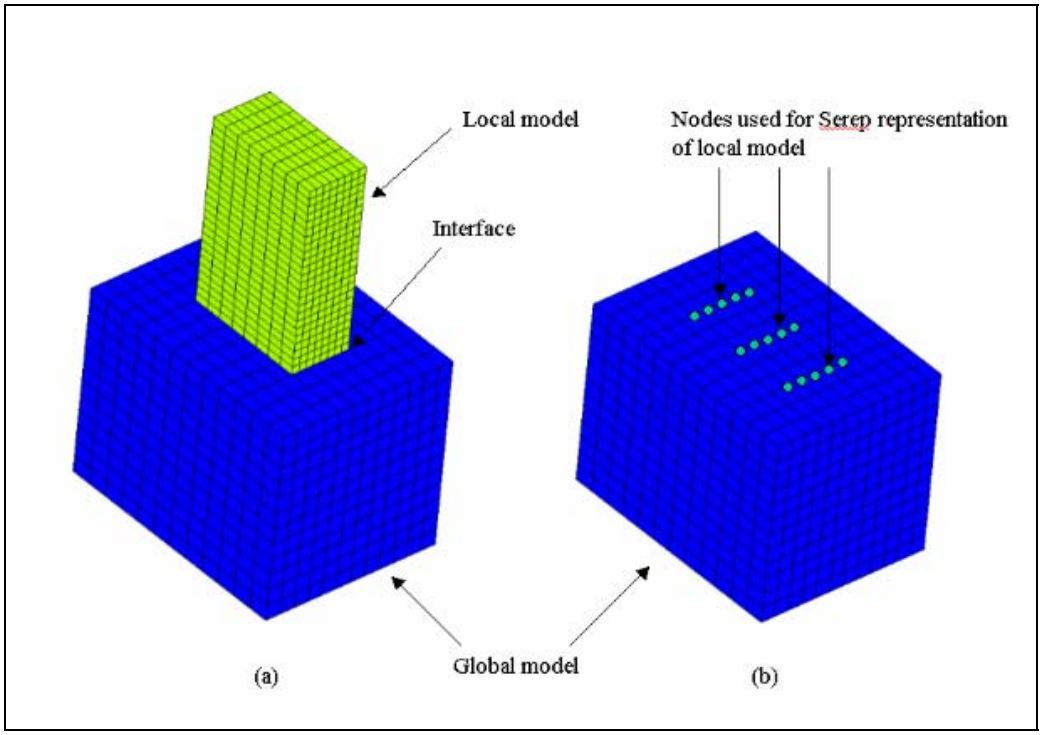

Figure 1. Baseline model with (a) standard FE mesh and (b) SEREP reduced model.

In the standard modeling approach, either mesh congruency can be maintained at the interface between the two components such that all DOF at the interface are merged, or an interface can be defined which relates the DOF of one component to the other, as seen in figure 1(a). In LS-Dyna, or LLNL Dyna3d, this type of interface is referred to as a tied interface. In general, it is a multipoint constraint equation. Our implementation of SEREP can be viewed, although the analogy is not exact, as an extension of the multipoint constraint formulation since the DOF of

the global model are related by the SEREP representation of the local model through the retained mode shapes. This is illustrated in figure 2 where node i and node j are related by the modal properties chosen for the representation of the local model. This modal representation usually results in a full mass matrix for the generic case. The mass matrix is not guaranteed to be full as some combinations of retained DOF and modes may lead to canceling of off-diagonal terms.

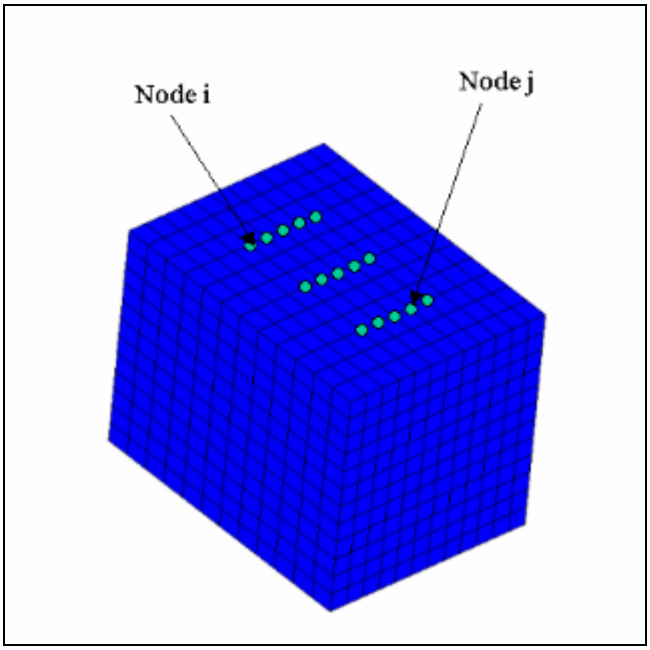

Figure 2. SEREP as a multipoint constraint approach.

Implementation of the SEREP representation of the local model requires the construction of the global mass and stiffness matrices. From Hopkins and Minnicino (*5*), the SEREP reduced mass matrix M_s, where the subscript *s* denotes SEREP reduced, is given by

$$M_s = T^T M_l T \quad , \tag{1}$$

where M_l is the local mass matrix and the transformation matrix T is given by

$$T = \begin{bmatrix} \Phi_{rm} \\ \Phi_{tm} \end{bmatrix} \Phi_{rm}^{-1} \quad , \tag{2}$$

where the subscript *r* denotes the retained DOF, *m* denotes the retained modes, and *t* denotes the truncated DOF. When $r = m$, the inverse required in equation 2 is the usual matrix inverse. For the general case when $r \neq m$, the inverse in equation 2 is the generalized matrix inverse (*6*). Substituting equation 2 into equation 1 allows the global mass matrix to be expressed as

$$M_s = \left[\begin{bmatrix}\Phi_{rm}\\ \Phi_{tm}\end{bmatrix}\Phi_{rm}^{-1}\right]^T M_l \left[\begin{bmatrix}\Phi_{rm}\\ \Phi_{tm}\end{bmatrix}\Phi_{rm}^{-1}\right] = \left[\Phi_{rm}^{-T}\begin{bmatrix}\Phi_{rm}\\ \Phi_{tm}\end{bmatrix}^T M_l \left[\begin{bmatrix}\Phi_{rm}\\ \Phi_{tm}\end{bmatrix}\Phi_{rm}^{-1}\right]\right], \quad (3)$$
$$= \Phi_{rm}^{-T} I \Phi_{rm}^{-1} = \Phi_{rm}^{-T}\Phi_{rm}^{-1},$$

where the orthogonality of the mass-normalized eigenvectors has been utilized. This resultant matrix is singular if the number of retained DOF, ***r*****,** is greater than the number of retained modes, *m* (*6*). The meaning of the inverse shown in equation 3 depends on the dimensionality of Φ_{rm}^{-1}. The superscript *–T* denotes the inverse of the matrix transpose, i.e., $A^{-T} = (A^T)^{-1}$.

This SEREP reduced local mass matrix is used to construct the global mass matrix

$$\tilde{M} = M_d + M_s, \quad (4)$$

where M_d is the diagonal mass matrix obtained from the elements in the global model (the *d* subscript denotes diagonal). $\tilde{M}$ is subsequently used to solve for the nodal accelerations of the global model

$$a = \tilde{M}^{-1} F. \quad (5)$$

$\tilde{M}$ may be singular because M_s is singular, in which case, the normal inverse does not exist. The solution of equation 5 can still be determined using singular value decomposition (SVD) (*8*), but this approach is not discussed in this report. In addition to being singular because of rank deficiency, the reduced mass matrix can also be ill-conditioned. This can also lead to numerical problems with the SVD approach for solving for the response. The results presented in this report are for SEREP models that have been constructed such that $\tilde{M}$ is nonsingular and well-conditioned. This was accomplished by selecting local model DOF which were on the boundary of the local model and had corresponding global model DOF associated with the local model DOF.

Proper selection of the retained DOF depends upon the actual boundary conditions between the global and local models as well as consideration of the desired frequency response present in the local model's SEREP representation. As a rule of thumb, all local modes below or near the highest frequency of interest should be selected. Also, only selecting nodes on the interface between the global and local models typically leads to acceptable results. Research is currently being conducted to develop more precise guidelines based on the modal characteristics of the local and global models.

The previous formulation of the reduced mass matrix was implemented in LLNL Dyna3d. A simple flowchart of the implementation is shown in figure 3.

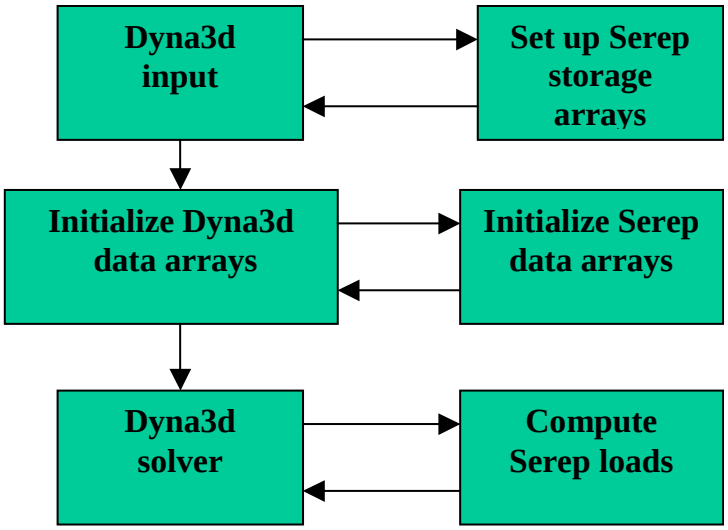

Figure 3. Simplified flow chart of SEREP implementation.

It is seen that implementation in LLNL Dyna3d was fairly straightforward. Routines were added to allocate storage arrays for the SEREP variables, initialize these arrays, and then calculate effective forces acting upon the nodes associated with the SEREP nodes. Initialization of the reduced mass matrix, and the computation of its inverse, are done once during the initialization phase. This information is saved so that computation of the nodal acceleration during the solution phase is efficient. The only values that must be recomputed at every time step are the effective internal nodal-loads due to the SEREP effective stiffness. These internal forces are computed using

$$F_{r,n+1} = \Phi_{rm}^{-T} \Lambda \Phi_{rm}^{-1} X_{r,n}, \tag{6}$$

where Λ is a diagonal matrix of the system's eigenvalues and $X_{r,n}$ are the nodal displacements at time t_n of the retained nodal DOF.

The time step cycle (*9*) that the solver uses to advance from t_n to t_{n+1} is shown in figure 4, together with the modifications to the Dyna3d logic required to include SEREP loading.

A time step in Dyna3d starts with the determination of the loads acting on the nodes. First, we discuss the normal time step cycle for Dyna3d. This cycle will be assumed to start at time t_0 with all nodal displacements, velocities, accelerations, and applied forces known. The nodal accelerations are very simple to compute because the Dyna3d formulation results in a diagonal mass matrix. Thus, the nodal accelerations are given by

$$a_{n+1} = M^{-1} F_n . \tag{7}$$

The nodal velocities and displacements are subsequently computed using a central difference update scheme. Technically, Dyna3d uses a strain and stress rate formulation. However, for the sake of brevity, the cycle simply indicates that the strains are computed after the displacement.

Then, depending on the constitutive model, the element stresses are computed. Finally, the gradient of the stress provides the internal forces. This internal force is subtracted from the external applied forces on a nodal basis. Finally, the cycle completes with the accelerations again being computed.

Implementing SEREP involves introducing two changes into this time step cycle. The first change, labeled "1" in figure 4, requires updating the nodal internal forces using equation 6. Entries in the force vector that are associated with SEREP DOF are temporarily saved for later use. Dyna3d then computes the nodal accelerations via the normal update method, equation 7. However, this computation assumes that the mass matrix is diagonal, which for SEREP-related DOFs is not necessarily true. Consequently, as indicated at "3" of figure 4, the actual nodal accelerations are computed using the previously stored force vector and the inverse of the mass submatrix that is associated with SEREP DOFs. These accelerations are then used to replace the erroneous values, and the normal time step cycle continues. This implementation thus requires minimal changes to the Dyna3d time step cycle, as seen in figure 4. The most difficult aspect of the implementation was, in fact, determining how to setup the appropriate storage requirements for the implementation to ensure that Dyna3d storage requirements were not adversely affected.

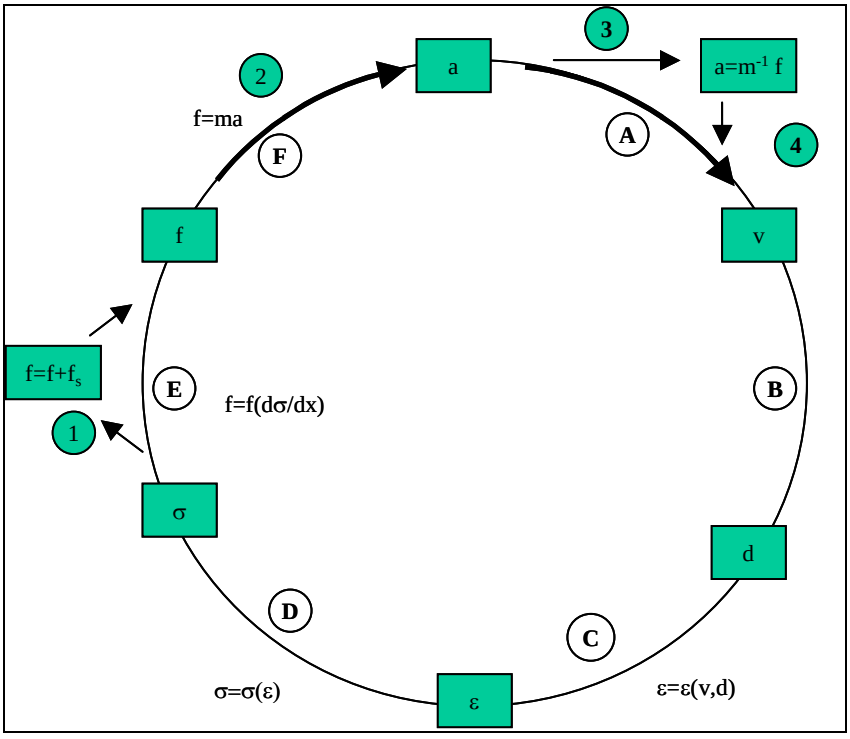

Figure 4. LLNL Dyna3d time step cycle.

This implementation was initially tested using the simple 1-D discrete spring-mass model shown in figure 5. This model was used to validate the implementation. The local model consisted of the DOF associated with masses 1–4, while the global model consisted of the DOF associated

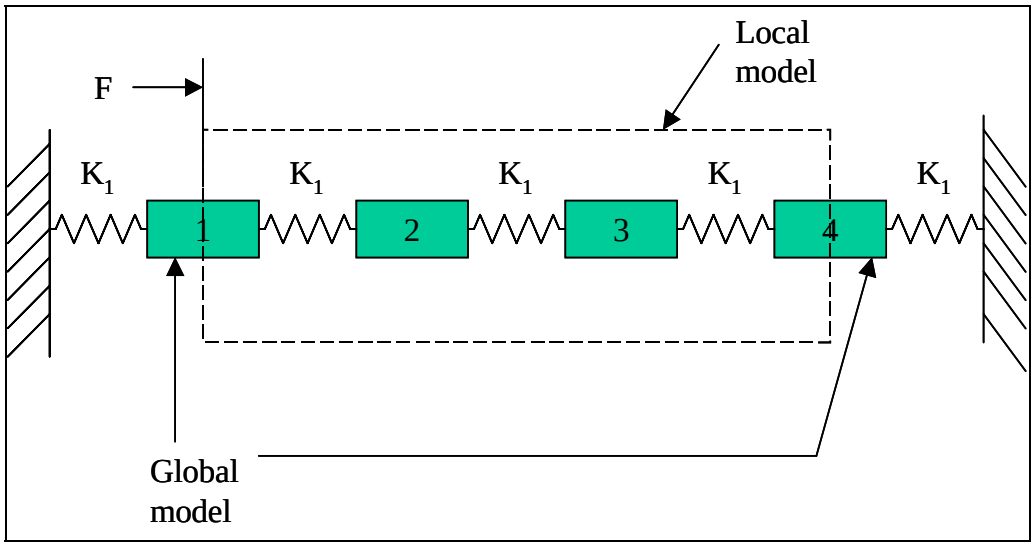

Figure 5. Simple spring-mass model.

with masses 1 and 4. Thus, the DOF of masses 1 and 4 constitute the interface between the global and local models. The local model's equations of motion are given by

$$\begin{bmatrix} \frac{M}{2} & 0 & 0 & 0 \\ 0 & M & 0 & 0 \\ 0 & 0 & M & 0 \\ 0 & 0 & 0 & \frac{M}{2} \end{bmatrix} \begin{Bmatrix} \ddot{x}_1 \\ \ddot{x}_2 \\ \ddot{x}_3 \\ \ddot{x}_4 \end{Bmatrix} + \begin{bmatrix} K_1 & -K_1 & 0 & 0 \\ -K_1 & 2K_1 & -K_1 & 0 \\ 0 & -K_1 & 2K_1 & 0 \\ 0 & 0 & -K_1 & K_1 \end{bmatrix} \begin{Bmatrix} x_1 \\ x_2 \\ x_3 \\ x_4 \end{Bmatrix} = \begin{Bmatrix} 0 \\ 0 \\ 0 \\ 0 \end{Bmatrix}, \tag{8}$$

where the full mass of DOF 2 and 3, and half of mass associated with DOF 1 and 4 and the springs connecting these DOF, are considered to comprise the local model. The global model's equations of motion, based on the DOF associated with masses 1 and 4, together with the springs connected to the rigid walls, are given by

$$\begin{bmatrix} \frac{M}{2} & 0 \\ 0 & \frac{M}{2} \end{bmatrix} \begin{Bmatrix} \ddot{x}_1 \\ \ddot{x}_4 \end{Bmatrix} + \begin{bmatrix} K & 0 \\ 0 & K \end{bmatrix} \begin{Bmatrix} x_1 \\ x_2 \end{Bmatrix} = \begin{Bmatrix} F - f_1(t) \\ -f_2(t) \end{Bmatrix}, \tag{9}$$

where a step load, F, was applied to mass 1. The forces, $f_1(t)$ and $f_2(t)$, in equation 9 are the effective forces at the global/local interface. The eigenvalues and eigenvectors for the local model were computed using equation 8 for free-free boundary conditions. These eigenvalues/eigenvector pairs were used to construct the SEREP representation of the local model. The numerical results for the complete spring-mass system were computed as the baseline response. Two SEREP cases were then analyzed. First, all modes for the local model were retained. For this condition, the resultant equations of motion are identical to the baseline system. In the second SEREP case, the highest eigenvalue was omitted, so only three modes

were retained for the local model: the rigid body motion and the first two elastic modes. Results for the response at masses 2 and 4 for all three cases are shown in figure 6. Both SEREP solutions are in excellent agreement with the baseline model. The effect of neglecting the highest eigenvalue shows up as a slight difference in the response for this case as compared to the baseline case. This simple spring-mass model verified that the implementation into Dyna3d was correct. Comparison of the baseline and SEREP results indicates that this approach represents a reasonable method of solving the global/local modeling problem. It is important to realize that the current implementation of SEREP assumes that all modes below a given upper frequency are retained. If the system shown in figure 5 was driven at a frequency higher than that of the greatest retained system natural frequency, then the error between the baseline solution and SEREP solution would increase.

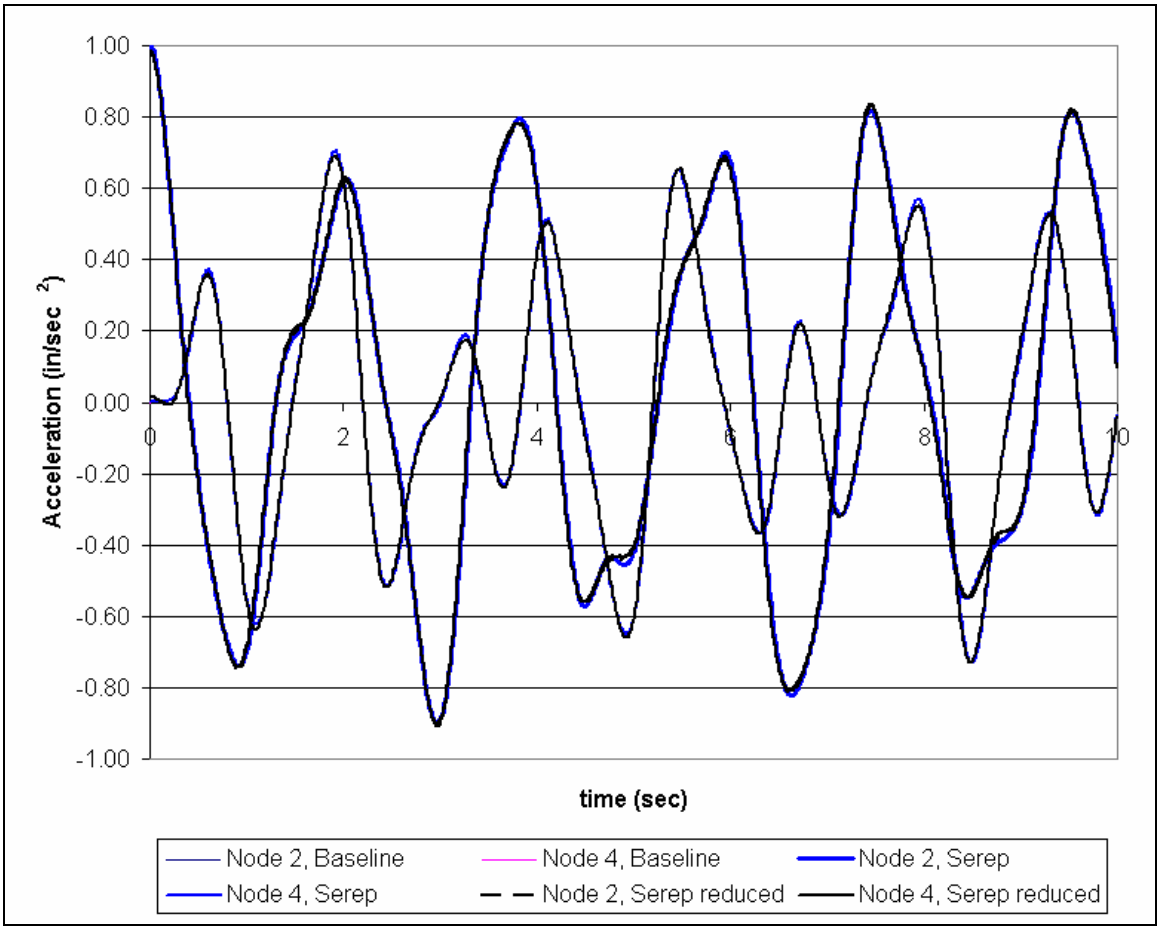

Figure 6. Baseline and local results of the discrete spring-mass system.

Next, the acceleration response of the model shown in figure 1(a) to a unit step load was computed. Baseline results for the full model where all common interface nodes have been merged are shown in figure 7. As seen previously in figure 1(b), 15 local model nodes at the global/local interface are merged because the meshes between the local and global models are non-congruent. Therefore, these merged nodes are a subset of the complete set of interface

nodes. The Y-direction stress results for the SEREP model, using these merged nodes at the interface, are shown in figure 8. It is seen that the results at the interface are different, which is to be expected. However, the contour levels are very similar a short distance away from the interface. Also note that this test case does not represent the best correlation that can be expected from this technique since not all interface nodes were used. Regardless, the results are encouraging. Using only the common interface nodes, the mass matrix that is inverted to solve for the nodal accelerations, step "A" of figure 4, is rendered nonsingular. This is because the equation to be solved is given by

$$F = \tilde{M}a = \left(\left[M_d\right] + \left[M_s\right]\right)a\,, \tag{10}$$

where $\left[M_d\right]$ is a diagonal mass matrix obtained from the single-point integration formulation of the FE elements at the global/local interface and the $\left[M_s\right]$ is the potentially singular SEREP-derived reduced mass matrix. The addition of these two matrices, for this case, results in a nonsingular matrix that is invertible. This is an empirical observation, since mathematically the resultant matrix could be singular for arbitrary matrices $\left[M_d\right]$ and $\left[M_s\right]$. If internal DOF were selected from the local model for this case, then the resultant mass matrix is guaranteed to be singular.

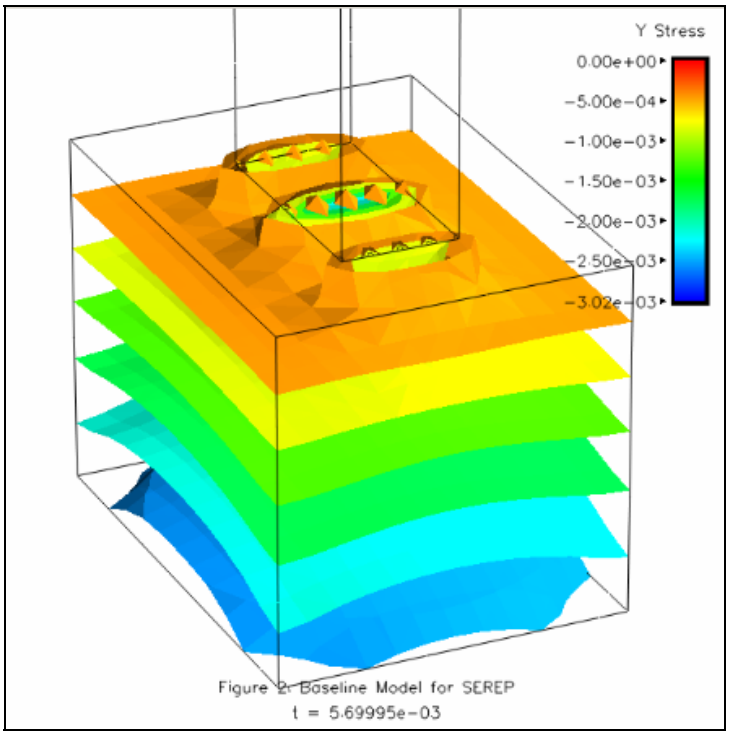

Figure 7. Y Stress results of 3D model. Baseline model results using only subset of interface nodes.

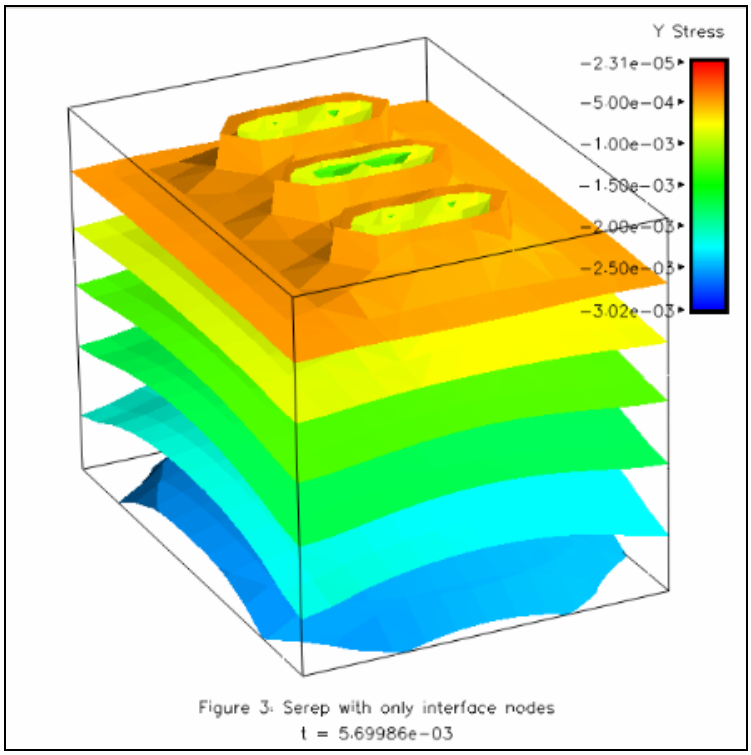

Figure 8. Y Stress results of 3D model. SEREP model results using subset of interface nodes.

As was observed from the Y-direction stress global results, examining the principal stresses shows that the results are different near the interface but similar away from the interface, as seen in figures 9 and 10.

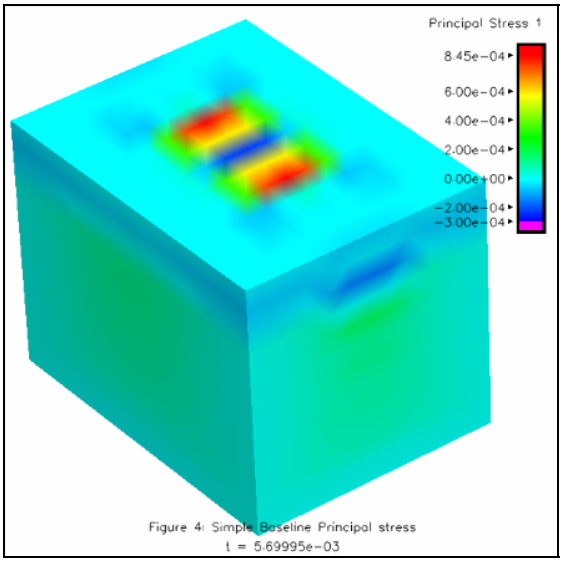

Figure 9. Principal stress at interface—baseline model.

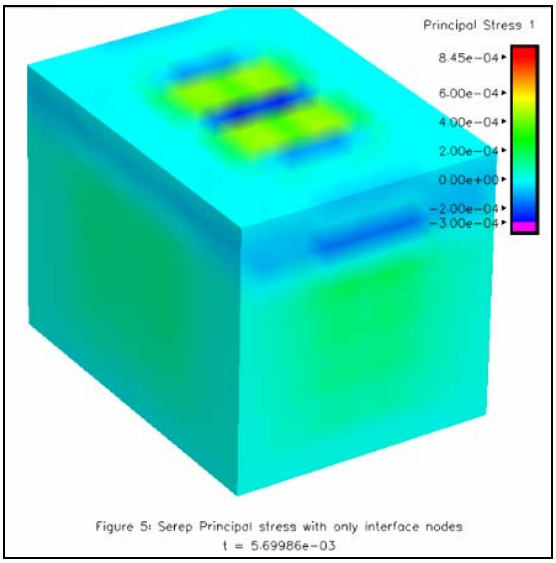

Figure 10. Principal stress at interface—SEREP model.

This observation allows for the efficient computation of the high-fidelity local solution by applying the global solution as local model boundary conditions where the full and global solutions appear equivalent. In a real structural analysis, the full system solution is not known and the correct global boundary condition is an engineering judgment based on the physics of the problem. The appropriate boundary conditions to apply to the local model are the time dependent displacements. Stress/time histories could also be used, but are more likely to introduce errors since stresses depend upon the displacement gradients. While the displacements of the interface nodes themselves could be used, because of St. Venant's Principle, the localized stresses, strains, and thus displacements of these nodal displacements are not representative of the actual system. However, the use of nodes located away from the actual interface would provide a better local response where the new, high-fidelity local model now includes the original local model and a part of the original global model, the size of which is dictated by St. Venant's Principle.

For comparison with the previous models, results for a more representative model using a tied interface are presented in figure 11. Unlike the SEREP or merged results presented previously, it is seen that the actual response at the interface is smooth. Again, this difference is to be expected for the sample problem since not all of the interface nodes were used in either the SEREP or baseline models. It is hypothesized that if the local model mesh is constructed such that all of the global model's interface nodes have corresponding nodes in the local model, then a more accurate response can be obtained for both the global and local models. This is inferred because the effect of point loading on the global model will be reduced if the global and local models are meshed such that the above mesh congruency is true.

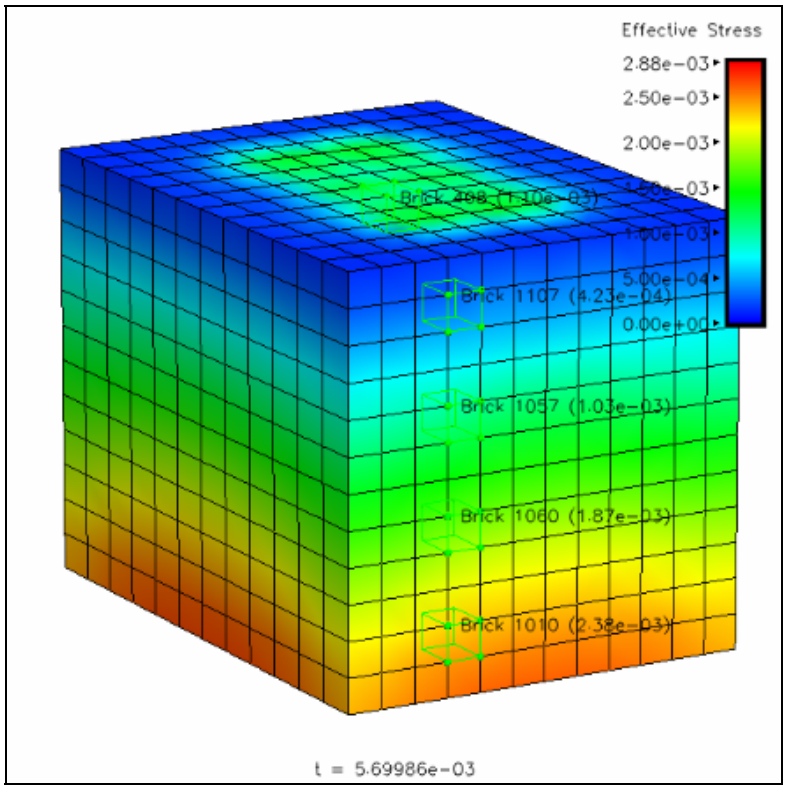

Figure 11. Effective stress at interface using a tied interface.

3. Future Work

Based on these preliminary results, the SEREP approach for global/local modeling presents a promising method for reducing a FE model's complexity while retaining correct mass and stiffness effects. Remaining issues which must be addressed include implementing a more robust SVD solver for finding solutions when the mass matrix is singular, automating the task of relating global and local DOF, and automating the selection of a proper set of local DOF so as to maintain accuracy in the global response calculation. None of these issues are intractable. They simply require diligence in formulating a reasonable modeling methodology such that this technique can be a useful tool for quickly analyzing proposed designs involving electronic components. Future research will examine SEREP's ability to use actual modal test data to generate the SEREP superelement for inclusion in the FE model. This would be useful when construction of a representative FE model for a complex part cannot be obtained in a timely manner, but modal data either already exists or can be obtained.

4. References

1. Wilkerson, S.; Hopkins, D.; Gazonas, G.; Berman, M. *Developing a Transient Finite Element Model to Simulate the Launch Environment of the 155-mm SADARM Projectile*. ADA388168.

2. Guyan, R. J. Reduction of Stiffness and Mass Matrices. *AIAA Journal* **1965**, *3*.

3. Newill, J. F.; Burns, B. P.; Wilkerson, S. A. *Overview of Gun Dynamics Numerical Simulations*. ADB238407.

4. Wilkerson, S. A.; Hopkins, D. A. *Analysis of a Balanced Breech System for the M1A1 Main Gun System Using Finite Element Techniques*. ADA286094.

5. Hopkins, D.; Minnicino II, M. *Overview of Reduction Methods and their Implementation into Finite Element Local-to-Global Techniques*. Technical report, U.S. Army Research Laboratory: Aberdeen Proving Ground, MD, in preparation.

6. O'Calahan, J. C.; Avitabile, P. A.; Riemer, R. System Equivalent Reduction Expansion Process (SEREP). Presented at the 7th International Modal Analysis Conference, Las Vegas, NV, February 1989.

7. Halquist, J. O. *Theoretical Manual for Dyna3d*. UCID-19401, DE83 011209, **1983**.

8. Press; Flannery; Teukolsky; Vetterling. *Numerical Recipes, The Art of Computing*.

9. Hughes, T. J. R.; Belytschko, T. Course Notes, Nonlinear Finite Element Analysis, Short Course. 8–12 December, 1997.

NO. OF
COPIES ORGANIZATION

1 (PDF ONLY) DEFENSE TECHNICAL INFORMATION CTR
DTIC OCA
8725 JOHN J KINGMAN RD
STE 0944
FORT BELVOIR VA 22060-6218

1 US ARMY RSRCH DEV & ENGRG CMD
SYSTEMS OF SYSTEMS INTEGRATION
AMSRD SS T
6000 6TH ST STE 100
FORT BELVOIR VA 22060-5608

1 INST FOR ADVNCD TCHNLGY
THE UNIV OF TEXAS
AT AUSTIN
3925 W BRAKER LN STE 400
AUSTIN TX 78759-5316

1 DIRECTOR
US ARMY RESEARCH LAB
IMNE ALC IMS
2800 POWDER MILL RD
ADELPHI MD 20783-1197

3 DIRECTOR
US ARMY RESEARCH LAB
AMSRD ARL CI OK TL
2800 POWDER MILL RD
ADELPHI MD 20783-1197

3 DIRECTOR
US ARMY RESEARCH LAB
AMSRD ARL CS IS T
2800 POWDER MILL RD
ADELPHI MD 20783-1197

ABERDEEN PROVING GROUND

1 DIR USARL
AMSRD ARL CI OK TP (BLDG 4600)

NO. OF COPIES ORGANIZATION

1 DIRECTOR
US ARMY RESEARCH LAB
AMSRD ARL SE DE
R ATKINSON
2800 POWDER MILL RD
ADELPHI MD 20783-1197

5 DIRECTOR
US ARMY RESEARCH LAB
AMSRD ARL WM MB
A ABRAHAMIAN
M BERMAN
M CHOWDHURY
T LI
E SZYMANSKI
2800 POWDER MILL RD
ADELPHI MD 20783-1197

1 COMMANDER
US ARMY MATERIEL CMD
AMXMI INT
5001 EISENHOWER AVE
ALEXANDRIA VA 22333-0001

2 PM MAS
SFAE AMO MAS MC
PICATINNY ARSENAL NJ
07806-5000

1 COMMANDER
US ARMY ARDEC
AMSTA AR CC
COL JENKER
PICATINNY ARSENAL NJ
07806-5000

1 COMMANDER
US ARMY ARDEC
AMSTA AR FSE
PICATINNY ARSENAL NJ
07806-5000

1 COMMANDER
US ARMY ARDEC
AMSTA AR TD
PICATINNY ARSENAL NJ
07806-5000

1 COMMANDER
US ARMY ARDEC
AMSTA AR CCH P
J LUTZ
PICATINNY ARSENAL NJ
07806-5000

NO. OF COPIES ORGANIZATION

13 COMMANDER
US ARMY ARDEC
AMSTA AR CCH A
F ALTAMURA
M NICOLICH
M PALATHINGUL
D VO
R HOWELL
A VELLA
M YOUNG
L MANOLE
S MUSALLI
R CARR
M LUCIANO
E LOGSDEN
T LOUZEIRO
PICATINNY ARSENAL NJ
07806-5000

1 COMMANDER
US ARMY ARDEC
AMSTA AR FSF T
C LIVECCHIA
PICATINNY ARSENAL NJ
07806-5000

1 COMMANDER
US ARMY ARDEC
AMSTA ASF
PICATINNY ARSENAL NJ
07806-5000

1 COMMANDER
US ARMY ARDEC
AMSTA AR QAC T C
J PAGE
PICATINNY ARSENAL NJ
07806-5000

1 COMMANDER
US ARMY ARDEC
AMSTA AR M
D DEMELLA
PICATINNY ARSENAL NJ
07806-5000

3 COMMANDER
US ARMY ARDEC
AMSTA AR FSA
A WARNASH
B MACHAK
M CHIEFA
PICATINNY ARSENAL NJ
07806-5000

NO. OF COPIES	ORGANIZATION
2	COMMANDER US ARMY ARDEC AMSTA AR FSP G M SCHIKSNIS D CARLUCCI PICATINNY ARSENAL NJ 07806-5000
2	COMMANDER US ARMY ARDEC AMSTA AR CCH C H CHANIN S CHICO PICATINNY ARSENAL NJ 07806-5000
1	COMMANDER US ARMY ARDEC AMSTA AR QAC T D RIGOGLIOSO PICATINNY ARSENAL NJ 07806-5000
1	US ARMY ARDEC INTELLIGENCE SPECIALIST AMSTA AR WEL F M GUERRIERE PICATINNY ARSENAL NJ 07806-5000
9	COMMANDER US ARMY ARDEC AMSTA AR CCH B P DONADIA F DONLON P VALENTI C KNUTSON G EUSTICE K HENRY J MCNABOC R SAYER F CHANG PICATINNY ARSENAL NJ 07806-5000
1	PM MAS SFAE AMO MAS CHIEF ENGINEER PICATINNY ARSENAL NJ 07806
1	PM ARMS SFAE GCSS ARMS BLDG 171 PICATINNY ARSENAL NJ 07806-5000
1	COMMANDER US ARMY ARDEC AMSTA AR WEA J BRESCIA PICATINNY ARSENAL NJ 07806-5000
1	PM MAS SFAE AMO MAS PICATINNY ARSENAL NJ 07806-5000
1	PM MAS SFAE AMO MAS PS PICATINNY ARSENAL NJ 07806-5000
2	PM MAS SFAE AMO MAS LC PICATINNY ARSENAL NJ 07806-5000
1	COMMANDER US ARMY ARDEC PRODUCTION BASE AMSMC PBM K PICATINNY ARSENAL NJ 07806-5000
1	COMMANDER US ARMY TACOM PM COMBAT SYSTEMS SFAE GCS CS 6501 ELEVEN MILE RD WARREN MI 48397-5000
1	COMMANDER US ARMY TACOM AMSTA SF WARREN MI 48397-5000
1	DIRECTOR AIR FORCE RESEARCH LAB MLLMD D MIRACLE 2230 TENTH ST WRIGHT PATTERSON AFB OH 45433-7817

NO. OF COPIES ORGANIZATION

1 OFC OF NAVAL RESEARCH
J CHRISTODOULOU
ONR CODE 332
800 N QUINCY ST
ARLINGTON VA 22217-5600

1 COMMANDER
US ARMY TACOM
PM SURVIVABLE SYSTEMS
SFAE GCSS W GSI H
M RYZYI
6501 ELEVEN MILE RD
WARREN MI 48397-5000

1 COMMANDER
US ARMY TACOM
CHIEF ABRAMS TESTING
SFAE GCSS W AB QT
T KRASKIEWICZ
6501 ELEVEN MILE RD
WARREN MI 48397-5000

1 COMMANDER
WATERVLIET ARSENAL
SMCWV QAE Q
B VANINA
BLDG 44
WATERVLIET NY 12189-4050

2 HQ IOC TANK
AMMUNITION TEAM
AMSIO SMT
R CRAWFORD
W HARRIS
ROCK ISLAND IL 61299-6000

2 COMMANDER
US ARMY AMCOM
AVIATION APPLIED TECH DIR
J SCHUCK
FORT EUSTIS VA 23604-5577

1 NSWC
DAHLGREN DIV CODE G06
DAHLGREN VA 22448

2 US ARMY CORPS OF ENGR
CERD C
T LIU
CEW ET
T TAN
20 MASSACHUSETTS AVE NW
WASHINGTON DC 20314

NO. OF COPIES ORGANIZATION

1 US ARMY COLD REGIONS
RSCH & ENGRNG LAB
P DUTTA
72 LYME RD
HANOVER NH 03755

13 COMMANDER
US ARMY TACOM
AMSTA TR R
R MCCLELLAND
D THOMAS
J BENNETT
D HANSEN
AMSTA JSK
S GOODMAN
J FLORENCE
D TEMPLETON
A SCHUMACHER
AMSTA TR D
D OSTBERG
L HINOJOSA
B RAJU
AMSTA CS SF
H HUTCHINSON
F SCHWARZ
WARREN MI 48397-5000

14 BENET LABS
AMSTA AR CCB
R FISCELLA
M SOJA
E KATHE
M SCAVULO
G SPENCER
P WHEELER
S KRUPSKI
J VASILAKIS
G FRIAR
R HASENBEIN
AMSTA CCB R
S SOPOK
E HYLAND
D CRAYON
R DILLON
WATERVLIET NY 12189-4050

1 USA SBCCOM PM SOLDIER SPT
AMSSB PM RSS A
J CONNORS
KANSAS ST
NATICK MA 01760-5057

NO. OF COPIES ORGANIZATION

1 NSWC
TECH LIBRARY CODE B60
17320 DAHLGREN RD
DAHLGREN VA 22448

2 USA SBCCOM
MATERIAL SCIENCE TEAM
AMSSB RSS
J HERBERT
M SENNETT
KANSAS ST
NATICK MA 01760-5057

2 OFC OF NAVAL RESEARCH
D SIEGEL CODE 351
J KELLY
800 N QUINCY ST
ARLINGTON VA 22217-5660

1 NSWC
CRANE DIVISION
M JOHNSON CODE 20H4
LOUISVILLE KY 40214-5245

2 NSWC
U SORATHIA
C WILLIAMS CODE 6551
9500 MACARTHUR BLVD
WEST BETHESDA MD 20817

2 COMMANDER
NSWC
CARDEROCK DIVISION
R PETERSON CODE 2020
M CRITCHFIELD CODE 1730
BETHESDA MD 20084

7 US ARMY RESEARCH OFC
A CROWSON
H EVERITT
J PRATER
G ANDERSON
D STEPP
D KISEROW
J CHANG
PO BOX 12211
RESEARCH TRIANGLE PARK NC
27709-2211

1 AFRL MLBC
2941 P ST RM 136
WRIGHT PATTERSON AFB OH
45433-7750

NO. OF COPIES ORGANIZATION

8 DIRECTOR
US ARMY NGIC
D LEITER MS 404
M HOLTUS MS 301
M WOLFE MS 307
S MINGLEDORF MS 504
J GASTON MS 301
W GSTATTENBAUER MS 304
R WARNER MS 305
J CRIDER MS 306
2055 BOULDERS RD
CHARLOTTESVILLE VA
22911-8318

1 NAVAL SEA SYSTEMS CMD
D LIESE
1333 ISAAC HULL AVE SE 1100
WASHINGTON DC 20376-1100

8 US ARMY SBCCOM
SOLDIER SYSTEMS CENTER
BALLISTICS TEAM
J WARD
W ZUKAS
P CUNNIFF
J SONG
MARINE CORPS TEAM
J MACKIEWICZ
BUS AREA ADVOCACY TEAM
W HASKELL
AMSSB RCP SS
W NYKVIST
S BEAUDOIN
KANSAS ST
NATICK MA 01760-5019

1 DIRECTOR
LOS ALAMOS NATL LAB
F L ADDESSIO T 3 MS 5000
PO BOX 1633
LOS ALAMOS NM 87545

8 NSWC
J FRANCIS CODE G30
D WILSON CODE G32
R D COOPER CODE G32
J FRAYSSE CODE G33
E ROWE CODE G33
T DURAN CODE G33
L DE SIMONE CODE G33
R HUBBARD CODE G33
DAHLGREN VA 22448

NO. OF COPIES ORGANIZATION

1 NSWC
CARDEROCK DIVISION
R CRANE CODE 6553
9500 MACARTHUR BLVD
WEST BETHESDA MD 20817-5700

1 AFRL MLSS
R THOMSON
2179 12TH ST RM 122
WRIGHT PATTERSON AFB OH
45433-7718

2 AFRL
F ABRAMS
J BROWN
BLDG 653
2977 P ST STE 6
WRIGHT PATTERSON AFB OH
45433-7739

5 DIRECTOR
LLNL
R CHRISTENSEN
S DETERESA
F MAGNESS
M FINGER MS 313
M MURPHY L 282
PO BOX 808
LIVERMORE CA 94550

1 AFRL MLS OL
L COULTER
5851 F AVE
BLDG 849 RM AD1A
HILL AFB UT 84056-5713

1 OSD
JOINT CCD TEST FORCE
OSD JCCD
R WILLIAMS
3909 HALLS FERRY RD
VICKSBURG MS 29180-6199

3 DARPA
M VANFOSSEN
S WAX
L CHRISTODOULOU
3701 N FAIRFAX DR
ARLINGTON VA 22203-1714

1 OAK RIDGE NATL LAB
R M DAVIS
PO BOX 2008
OAK RIDGE TN 37831-6195

NO. OF COPIES ORGANIZATION

1 OAK RIDGE NATL LAB
C EBERLE MS 8048
PO BOX 2008
OAK RIDGE TN 37831

3 DIRECTOR
SANDIA NATL LABS
APPLIED MECHS DEPT
MS 9042
J HANDROCK
Y R KAN
J LAUFFER
PO BOX 969
LIVERMORE CA 94551-0969

1 OAK RIDGE NATL LAB
C D WARREN MS 8039
PO BOX 2008
OAK RIDGE TN 37831

4 NIST
M VANLANDINGHAM MS 8621
J CHIN MS 8621
J MARTIN MS 8621
D DUTHINH MS 8611
100 BUREAU DR
GAITHERSBURG MD 20899

1 HYDROGEOLOGIC INC
SERDP ESTCP SPT OFC
S WALSH
1155 HERNDON PKWY STE 900
HERNDON VA 20170

3 NASA LANGLEY RESEARCH CTR
AMSRD ARL VT
W ELBER MS 266
F BARTLETT JR MS 266
G FARLEY MS 266
HAMPTON VA 23681-0001

1 FHWA
E MUNLEY
6300 GEORGETOWN PIKE
MCLEAN VA 22101

1 USDOT FEDERAL RAILROAD
M FATEH RDV 31
WASHINGTON DC 20590

NO. OF COPIES ORGANIZATION

3 CYTEC FIBERITE
R DUNNE
D KOHLI
R MAYHEW
1300 REVOLUTION ST
HAVRE DE GRACE MD 21078

1 DIRECTOR
NGIC
IANG TMT
2055 BOULDERS RD
CHARLOTTESVILLE VA
22911-8318

2 3TEX CORP
A BOGDANOVICH
J SINGLETARY
109 MACKENAN DR
CARY NC 27511

1 DIRECTOR
DEFENSE INTLLGNC AGNCY
TA 5
K CRELLING
WASHINGTON DC 20310

1 COMPOSITE MATERIALS INC
D SHORTT
19105 63 AVE NE
PO BOX 25
ARLINGTON WA 98223

1 JPS GLASS
L CARTER
PO BOX 260
SLATER RD
SLATER SC 29683

1 COMPOSITE MATERIALS INC
R HOLLAND
11 JEWEL CT
ORINDA CA 94563

1 COMPOSITE MATERIALS INC
C RILEY
14530 S ANSON AVE
SANTA FE SPRINGS CA 90670

1 SIMULA
R HUYETT
10016 S 51ST ST
PHOENIX AZ 85044

NO. OF COPIES ORGANIZATION

2 PROTECTION MATERIALS INC
M MILLER
F CRILLEY
14000 NW 58 CT
MIAMI LAKES FL 33014

2 FOSTER MILLER
M ROYLANCE
W ZUKAS
195 BEAR HILL RD
WALTHAM MA 02354-1196

1 ROM DEVELOPMENT CORP
R O MEARA
136 SWINEBURNE ROW
BRICK MARKET PLACE
NEWPORT RI 02840

2 TEXTRON SYSTEMS
M TREASURE
T FOLTZ
1449 MIDDLESEX ST
LOWELL MA 01851

1 O GARA HESS & EISENHARDT
M GILLESPIE
9113 LESAINT DR
FAIRFIELD OH 45014

1 MILLIKEN RESEARCH CORP
M MACLEOD
PO BOX 1926
SPARTANBURG SC 29303

1 CONNEAUGHT INDUSTRIES INC
J SANTOS
PO BOX 1425
COVENTRY RI 02816

1 ARMTEC DEFENSE PRODUCTS
S DYER
85 901 AVE 53
PO BOX 848
COACHELLA CA 92236

3 PACIFIC NORTHWEST LAB
M SMITH
G VAN ARSDALE
R SHIPPELL
PO BOX 999
RICHLAND WA 99352

NO. OF COPIES ORGANIZATION

1 ALLIANT TECHSYSTEMS INC
4700 NATHAN LN N
PLYMOUTH MN 55442-2512

1 APPLIED COMPOSITES
W GRISCH
333 NORTH SIXTH ST
ST CHARLES IL 60174

1 CUSTOM ANALYTICAL
ENG SYS INC
A ALEXANDER
13000 TENSOR LANE NE
FLINTSTONE MD 21530

1 AAI CORP
DR N B MCNELLIS
PO BOX 126
HUNT VALLEY MD 21030-0126

1 OFC DEPUTY UNDER SEC DEFNS
J THOMPSON
1745 JEFFERSON DAVIS HWY
CRYSTAL SQ 4 STE 501
ARLINGTON VA 22202

3 ALLIANT TECHSYSTEMS INC
J CONDON
E LYNAM
J GERHARD
WV01 16 STATE RT 956
PO BOX 210
ROCKET CENTER WV
26726-0210

1 PROJECTILE TECHNOLOGY INC
515 GILES ST
HAVRE DE GRACE MD 21078

1 PRATT & WHITNEY
C WATSON
400 MAIN ST MS 114 37
EAST HARTFORD CT 06108

5 NORTHROP GRUMMAN
B IRWIN
K EVANS
D EWART
A SHREKENHAMER
J MCGLYNN
BLDG 160 DEPT 3700
1100 W HOLLYVALE ST
AZUSA CA 91701

NO. OF COPIES ORGANIZATION

1 BRIGS COMPANY
J BACKOFEN
2668 PETERBOROUGH ST
HERNDON VA 22071-2443

1 ZERNOW TECHNICAL SERVICES
L ZERNOW
425 W BONITA AVE STE 208
SAN DIMAS CA 91773

1 GENERAL DYNAMICS OTS
L WHITMORE
10101 NINTH ST NORTH
ST PETERSBURG FL 33702

2 GENERAL DYNAMICS OTS
FLINCHBAUGH DIV
K LINDE
T LYNCH
PO BOX 127
RED LION PA 17356

1 GKN WESTLAND AEROSPACE
D OLDS
450 MURDOCK AVE
MERIDEN CT 06450-8324

1 BOEING ROTORCRAFT
P HANDEL
800 B PUTNAM BLVD
WALLINGFORD PA 19086

5 SIKORSKY AIRCRAFT
G JACARUSO
T CARSTENSAN
B KAY
S GARBO MS S330A
J ADELMANN
6900 MAIN ST
PO BOX 9729
STRATFORD CT 06497-9729

1 AEROSPACE CORP
G HAWKINS M4 945
2350 E EL SEGUNDO BLVD
EL SEGUNDO CA 90245

2 CYTEC FIBERITE
M LIN
W WEB
1440 N KRAEMER BLVD
ANAHEIM CA 92806

NO. OF COPIES ORGANIZATION

2 UDLP
G THOMAS
M MACLEAN
PO BOX 58123
SANTA CLARA CA 95052

2 UDLP
R BRYNSVOLD
P JANKE MS 170
4800 E RIVER RD
MINNEAPOLIS MN 55421-1498

1 NORTHRUP GRUMMAN CORP
ELECTRONIC SENSORS
& SYSTEMS DIV
E SCHOCH MS V 16
1745A W NURSERY RD
LINTHICUM MD 21090

1 GDLS DIVISION
D BARTLE
PO BOX 1901
WARREN MI 48090

2 GDLS
D REES
M PASIK
PO BOX 2074
WARREN MI 48090-2074

1 GDLS
MUSKEGON OPER
M SOIMAR
76 GETTY ST
MUSKEGON MI 49442

1 GENERAL DYNAMICS
AMPHIBIOUS SYS
SURVIVABILITY LEAD
G WALKER
991 ANNAPOLIS WAY
WOODBRIDGE VA 22191

6 INST FOR ADVANCED
TECH
H FAIR
I MCNAB
P SULLIVAN
S BLESS
W REINECKE
C PERSAD
3925 W BRAKER LN STE 400
AUSTIN TX 78759-5316

NO. OF COPIES ORGANIZATION

1 ARROW TECH ASSOC
1233 SHELBURNE RD STE D8
SOUTH BURLINGTON VT
05403-7700

1 R EICHELBERGER
CONSULTANT
409 W CATHERINE ST
BEL AIR MD 21014-3613

1 SAIC
G CHRYSSOMALLIS
8500 NORMANDALE LAKE BLVD
SUITE 1610
BLOOMINGTON MN 55437-3828

1 UCLA MANE DEPT ENGR IV
H T HAHN
LOS ANGELES CA 90024-1597

2 UNIV OF DAYTON
RESEARCH INST
R Y KIM
A K ROY
300 COLLEGE PARK AVE
DAYTON OH 45469-0168

1 GA TECH RESEARCH INST
GA INST OF TCHNLGY
P FRIEDERICH
ATLANTA GA 30392

1 MICHIGAN ST UNIV
MSM DEPT
R AVERILL
3515 EB
EAST LANSING MI 48824-1226

1 PENN STATE UNIV
R S ENGEL
245 HAMMOND BLDG
UNIVERSITY PARK PA 16801

1 PENN STATE UNIV
C BAKIS
212 EARTH ENGR
SCIENCES BLDG
UNIVERSITY PARK PA 16802

1 PURDUE UNIV
SCHOOL OF AERO & ASTRO
C T SUN
W LAFAYETTE IN 47907-1282

NO. OF COPIES ORGANIZATION

1 STANFORD UNIV
DEPT OF AERONAUTICS
& AEROBALLISTICS
S TSAI
DURANT BLDG
STANFORD CA 94305

1 UNIV OF MAINE
ADV STR & COMP LAB
R LOPEZ ANIDO
5793 AEWC BLDG
ORONO ME 04469-5793

1 JOHNS HOPKINS UNIV
APPLIED PHYSICS LAB
P WIENHOLD
11100 JOHNS HOPKINS RD
LAUREL MD 20723-6099

1 UNIV OF DAYTON
J M WHITNEY
COLLEGE PARK AVE
DAYTON OH 45469-0240

5 UNIV OF DELAWARE
CTR FOR COMPOSITE MTRLS
J GILLESPIE
M SANTARE
S YARLAGADDA
S ADVANI
D HEIDER
201 SPENCER LAB
NEWARK DE 19716

1 DEPT OF MTRLS
SCIENCE & ENGRG
UNIV OF ILLINOIS
AT URBANA CHAMPAIGN
J ECONOMY
1304 W GREEN ST 115B
URBANA IL 61801

1 UNIV OF MARYLAND
DEPT OF AEROSPACE ENGRG
A J VIZZINI
COLLEGE PARK MD 19104

1 DREXEL UNIV
A S D WANG
3141 CHESTNUT ST
PHILADELPHIA PA 20742

NO. OF COPIES ORGANIZATION

3 UNIV OF TEXAS AT AUSTIN
CTR FOR ELECTROMECHANICS
J PRICE
A WALLS
J KITZMILLER
10100 BURNET RD
AUSTIN TX 78758-4497

2 VA POLYTECHNICAL
INST & STATE UNIV
DEPT OF ESM
M W HYER
R JONES
BLACKSBURG VA 24061-0219

1 SOUTHWEST RESEARCH INST
ENGR & MATL SCIENCES DIV
J RIEGEL
6220 CULEBRA RD
PO DRAWER 28510
SAN ANTONIO TX 78228-0510

1 BATELLE NATICK OPERS
B HALPIN
313 SPEEN ST
NATICK MA 01760

3 DIRECTOR
US ARMY RESEARCH LAB
AMSRD ARL WM MB
A FRYDMAN
2800 POWDER MILL RD
ADELPHI MD 20783-1197

ABERDEEN PROVING GROUND

1 US ARMY ATC
CSTE DTC AT AC I
W C FRAZER
400 COLLERAN RD
APG MD 21005-5059

87 DIR USARL
AMSRD ARL CI
AMSRD ARL O AP EG
M ADAMSON
AMSRD ARL SL BA
AMSRD ARL SL BB
D BELY
AMSRD ARL WM
J SMITH
AMSRD ARL WM B
CHIEF

NO. OF COPIES ORGANIZATION

AMSRD ARL WM BA
CHIEF
AMSRD ARL WM BC
J NEWILL
P PLOSTINS
AMSRD ARL WM BD
P CONROY
B FORCH
M LEADORE
C LEVERITT
R LIEB
R PESCE-RODRIGUEZ
B RICE
A ZIELINSKI
AMSRD ARL WM BF
S WILKERSON
AMSRD ARL WM M
J MCCAULEY
S MCKNIGHT
AMSRD ARL WM MA
CHIEF
L GHIORSE
E WETZEL
AMSRD ARL WM MB
J BENDER
T BOGETTI
J BROWN
L BURTON
R CARTER
K CHO
W DE ROSSET
G DEWING
R DOWDING
W DRYSDALE
R EMERSON
D GRAY
D HOPKINS
R KASTE
L KECSKES
M MINNICINO
B POWERS
D SNOHA
J SOUTH
M STAKER
J SWAB
J TZENG
AMSRD ARL WM MC
CHIEF
R BOSSOLI
E CHIN
S CORNELISON
D GRANVILLE
B HART
J LASALVIA

NO. OF COPIES ORGANIZATION

J MONTGOMERY
F PIERCE
E RIGAS
W SPURGEON
AMSRD ARL WM MD
B CHEESEMAN
P DEHMER
R DOOLEY
G GAZONAS
S GHIORSE
M KLUSEWITZ
W ROY
J SANDS
D SPAGNUOLO
S WALSH
S WOLF
AMSRD ARL WM RP
J BORNSTEIN
C SHOEMAKER
AMSRD ARL WM T
B BURNS
AMSRD ARL WM TA
W BRUCHEY
M BURKINS
W GILLICH
B GOOCH
T HAVEL
C HOPPEL
E HORWATH
M NORMANDIA
J RUNYEON
M ZOLTOSKI
AMSRD ARL WM TB
P BAKER
AMSRD ARL WM TC
R COATES
AMSRD ARL WM TD
D DANDEKAR
M RAFTENBERG
S SCHOENFELD
T WEERASOORIYA
AMSRD ARL WM TE
CHIEF

NO. OF COPIES ORGANIZATION

1 LTD
R MARTIN
MERL
TAMWORTH RD
HERTFORD SG13 7DG
UK

1 SMC SCOTLAND
P W LAY
DERA ROSYTH
ROSYTH ROYAL DOCKYARD
DUNFERMLINE FIFE KY 2XR
UK

1 CIVIL AVIATION
ADMINSTRATION
T GOTTESMAN
PO BOX 8
BEN GURION INTRNL AIRPORT
LOD 70150
ISRAEL

1 AEROSPATIALE
S ANDRE
A BTE CC RTE MD132
316 ROUTE DE BAYONNE
TOULOUSE 31060
FRANCE

1 DRA FORT HALSTEAD
P N JONES
SEVEN OAKS KENT TN 147BP
UK

1 SWISS FEDERAL ARMAMENTS
WKS
W LANZ
ALLMENDSTRASSE 86
3602 THUN
SWITZERLAND

1 DYNAMEC RESEARCH LAB
AKE PERSSON
BOX 201
SE 151 23 SODERTALJE
SWEDEN

1 ISRAEL INST OF TECHLGY
S BODNER
FACULTY OF MECHANICAL
ENGR
HAIFA 3200
ISRAEL

NO. OF COPIES ORGANIZATION

1 DSTO
WEAPONS SYSTEMS DIVISION
N BURMAN RLLWS
SALISBURY
SOUTH AUSTRALIA 5108
AUSTRALIA

1 DEF RES ESTABLISHMENT
VALCARTIER
A DUPUIS
2459 BLVD PIE XI NORTH
VALCARTIER QUEBEC
CANADA
PO BOX 8800 COURCELETTE
GOA IRO QUEBEC
CANADA

1 ECOLE POLYTECH
J MANSON
DMX LTC
CH 1015 LAUSANNE
SWITZERLAND

1 TNO DEFENSE RESEARCH
R IJSSELSTEIN
ACCOUNT DIRECTOR
R&D ARMEE
PO BOX 6006
2600 JA DELFT
THE NETHERLANDS

2 FOA NATL DEFENSE RESEARCH
ESTAB
DIR DEPT OF WEAPONS &
PROTECTION
B JANZON
R HOLMLIN
S 172 90 STOCKHOLM
SWEDEN

2 DEFENSE TECH & PROC
AGENCY GROUND
I CREWTHER
GENERAL HERZOG HAUS
3602 THUN
SWITZERLAND

NO. OF
COPIES ORGANIZATION

1 MINISTRY OF DEFENCE
RAFAEL
ARMAMENT DEVELOPMENT
AUTH
M MAYSELESS
PO BOX 2250
HAIFA 31021
ISRAEL

1 B HIRSCH
TACHKEMONY ST 6
NETAMUA 42611
ISRAEL

1 TNO DEFENSE RESEARCH
I H PASMAN
POSTBUS 6006
2600 JA DELFT
THE NETHERLANDS

1 DEUTSCHE AEROSPACE AG
DYNAMICS SYSTEMS
M HELD
PO BOX 1340
D 86523 SCHROBENHAUSEN
GERMANY

INTENTIONALLY LEFT BLANK.