ICG:PP

Publications of the
DEPARTMENT OF COMMERCE
BUREAU OF STANDARDS

Letter
Circular
LC 32

(January 3,1928.)

METHODS OF SILVERING GLASS.

In response to numerous requests for methods of silvering mirrors, the following formulae and directions have been collected. The methods described are selected from the large number of silvering formulae available, and are those which are in most common use.

CLEANING THE SURFACE TO BE SILVERED.

This is the most important part of the process, whatever formula is used. The glass surface must be chemically clean. A greasy surface, which has not previously been silvered, should be cleaned with some such solvent as alcohol or ether. Following this, the surface should be scrupulously cleaned with nitric acid.

Make a swab by winding absorbent cotton on the end of a glass spatula or glass rod, with sufficient thickness of cotton so that there will be no danger of scratching the glass with the rod. With such a swab and pure nitric acid, to which a little distilled water may be added, clean <u>every</u> part of the surface; considerable pressure should be used in rubbing with the swab. Do not let any part of the glass become dry in this process; if it does, swab and clean again. Rinse off the nitric acid, for which ordinary water may be used at first, followed by distilled (or rain) water. Finally leave the mirror in a tray or other container, covered with distilled water, until ready to silver. <u>No part of the mirror should be allowed to become dry</u>.

After cleaning with nitric acid, many advise a second cleaning with a strong solution of caustic potash, followed by an application of French chalk, and rinsing as above. The nitric acid alone will be found sufficient, provided the cleaning is thoroughly done and plenty of pressure used in the swabbing.

AUTHENTICATED
U.S. GOVERNMENT
INFORMATION
GPO

During the process of cleaning the glass care must be taken to avoid scratching the surface. If a satisfactory mirror is to be produced the deposit must be made on a highly polished surface entirely free from defects. The slightest scratch or mark will show on the finished mirror.

In commercial silvering many manipulators follow the cleaning with nitric acid by a vigorous swabbing with a saturated solution of stannous chloride ($SnCl_2$) which is carefully rinsed off with warm water. This is regarded as an essential feature in most of the "secret processes" used in the trade.

It is sometimes found that old surfaces which have been exposed to the atmosphere for a long period of time do not silver evenly. If a good optical surface is desired the only remedy is repolishing to expose a fresh surface. If, however, a good optical surface is not required, the surface may be treated with a two per cent solution of hydrofluoric acid for two or three minutes, after which the usual cleaning is followed by silvering. Such a method may be used when silvering reflectors for lamps or inaccessible interior surfaces of chemical apparatus which cannot be reached with a swab. The hydrofluoric acid treatment will not lessen the detrimental effect of scratches and must not be used on mirrors for reflecting telescopes or other precision optical work.

GENERAL INFORMATION.

The silvering is conveniently done in a large shallow tray only slightly larger than the surface to be silvered. Care should be taken that the hands do not touch the solutions. This is necessary, not only for the protection of the hands, but also to protect the solutions from contamination. The use of rubber gloves will be found to be a convenience. Nitrate of silver stains on the hands, if freshly made, can be removed by bathing the hands in hot hyposulphite of soda (commonly termed "hypo" by photographers) or a dilute solution (cold) of potassium cyanide (very poisonous: should not be used if there are cuts or abrasions on the hands).

All chemicals used in the preparation of solutions must be of high purity, of the grade known in the trade as C. P.; the use of impure reagents will result in failure.

Distilled water is best; if this is not available, use

rain water. In some localities it will be found that the water from the taps will answer instead of distilled water. A test on a small mirror will decide this point. If the solution turns a light blue or pink when the silver nitrate is dissolved in the water, the water is probably too impure for the purpose.

The merest trace of chlorine, free or in combination, will cause failure. In silvering small mirrors, where small amounts of solutions are used, care must be taken that the solutions are not contaminated by the salt in the natural perspiration of the hands.

Pure grain alcohol, required for some of the formulas, is extremely difficult to obtain. We have found that alcohol, denatured by the addition of wood alcohol, 1 part in 20, may be used to replace the grain alcohol. This corresponds to alcohol denatured in accordance with special denaturing formula 3-A of the Bureau of Internal Revenue.

It has been further found that commercial rubbing alcohol, sold under the trade name of "Alcorub", may be used for Brashear's process. We have tried no other brands of rubbing alsohol but it is probable that those sold under other trade names will serve equally well.

BRASHEAR'S PROCESS.

This process is probably used more than any other for silvering the surface of large mirrors used in reflecting telescopes, and laboratory mirrors where a thick coat is desired.

For most work the following proportions will be found adequate:

$$\frac{\text{Square cms.}}{40}, \quad \text{or} \quad \frac{\text{Square inches}}{3} = \left(\begin{array}{l}\text{Number of grams}\\ \text{silver nitrate}\\ \text{required.}\end{array}\right.$$

For very thick coats, and for astronomical mirrors, many prefer a more liberal allowance of silver nitrate, about as follows:

$$\frac{\text{Square cms.}}{27}, \quad \text{or} \quad \frac{\text{Square inches}}{4} = \left(\begin{array}{l}\text{Number of grams}\\ \text{silver nitrate}\\ \text{required.}\end{array}\right.$$

CAUTION: In using the Brashear process keep the solutions,

and do the silvering, at a temperature of about 15°C, or 59°F. In hot weather it is advisable to use ice to keep the temperature of the solutions below 18°C (64°F). If warmer than this the resulting coat is apt to be soft and there is danger of the formation of small amounts of silver fulminate, which is very explosive.

The reducing solution:

Rock candy or granulated sugar	90 grams
Nitric acid (sp.gr. 1.22)	4 cc
Alcohol	175 cc
Distilled water	1000 cc

This reducing solution is preferably made up in advance; the older it is, the better it will work. If necessary to use it at once, the action may be improved by boiling it, adding the alcohol after it has cooled.

The silvering solution: (Make up just before silvering.)

A	Distilled water	300 cc
	Silver nitrate	20 grams
	Strongest ammonia, as may be needed	(see below)
B	Distilled water	100 cc
	Caustic potash	10 grams
C	Distilled water	30 cc
	Silver nitrate	2 grams

In solution A, after the nitrate is all dissolved, add ammonia gradually. The solution will at once turn a dark brown. Continue adding ammonia, drop by drop toward the close of the process, until the solution just clears up; avoid an excess of ammonia. Then pour in solution B; the mixture will again turn dark brown or black. Again add ammonia, drop by drop toward the close, and stirring constantly, until the solution just clears up again. It should now be a light brown or straw color, but transparent.

Next add slowly, stirring constantly, as much of the reserve silver solution, C, as the mixture will take up without turning too dark; it is important that the nitrate of silver be in excess. Continue this till there is quite a little suspended matter, which the solution refuses to take up. Filter through absorbent cotton.

When ready to silver, pour into this mixture about 6 cc of the reducing solution for each gram of silver nitrate used, and pour at once upon the mirror, which has been lying covered by about the same amount of water as is used in the solutions; this water need not be poured off.

The process will be finished in from three to eight minutes, depending on the temperature of the solutions, which should never exceed 18°C (64°F). It is well to make preliminary tests in small beakers or drinking glasses to get the time necessary, as the coat is apt to bleach if process is continued too long. Keep solution in motion so that the thick sediment which forms will not deposit on the silver coat. A <u>very</u> light swabbing with loose absorbent cotton over <u>every</u> part of the mirror will be found advantageous in large mirrors, as soon as the coat begins to form. Avoid exposing the surface to the air for more than a second or two at a time to observe progress.

Get the spent solution off quickly at the close of the process, rinse thoroughly, first with ordinary and then with distilled water; swab lightly with absorbent cotton while rinsing if there is much "bloom" on the surface.

A VARIATION OF BRASHEAR PROCESS FOR
SMALL SURFACES ON OPTICAL COMPONENTS.

If one has sufficient silvering to justify the installation of permanent equipment for the work, the arrangement shown in the illustration is very convenient.

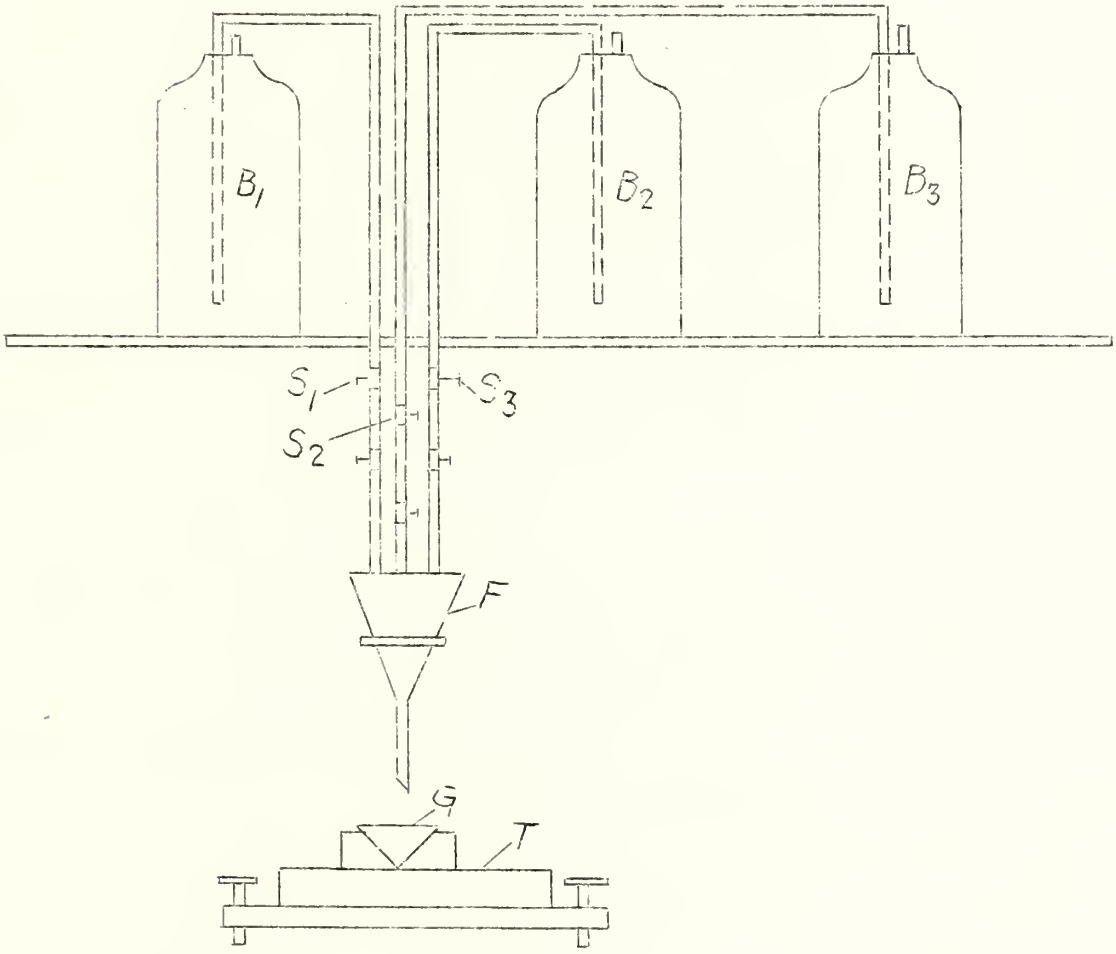

The reducing solution, silvering solution, and distilled water are placed in three separate bottles, B1, B2, and B3. Glass syphon tubes, each of which is fitted with the two stop

cocks, extended from each of the bottles. The upper stopcocks, S_1, S_2 and S_3, are set permanently to give the desired rate of flow of each solution. This rate of flow is as follows: 80 drops of silvering solution, 16 drops of reducing solution, and 80 drops of distilled water per minute.

The solutions drop from the tubes into a glass funnel F where they become mixed. The glass G to be silvered is placed about an inch below the funnel. While the process is going on the funnel should be moved so that the liquid is uniformly distributed over the level surface of the glass. The spent solution flows into a receptacle which is placed beneath the glass. The glass to be silvered and the receptacle are placed on the levelling table T, in order that the surface of the glass may be easily levelled.

The solutions to be used with this apparatus are to be prepared as follows:

The silvering solution: Dissolve 31 grams of silver nitrate in 35 cc distilled water. And 16 gm potassium hydroxide is dissolved in 30 cc distilled water.

Add 30 cc silver nitrate solution to 4000 cc distilled water. Then add ammonia, drop by drop, until the precipitate is formed. Stir the solution well. Ammonia is again added, drop by drop, and the solution is stirred continuously until nearly clear.

Having the solution at this point, add the 30 cc potassium hydroxide solution; and continue adding ammonia as before. Stir and add ammonia until the whole solution is nearly clear. Add the remaining 5 cc silver nitrate solution.

Reducing solution: Dissolve 210 grams cane sugar in 3000 cc distilled water. Add 7.4 cc nitric acid. Stir. Add 240 cc grain alcohol. Stir.

NOTE: See page 3 regarding the use of denatured alcohol.

This solution improves with age and when used should be at least one month old.

CAUTION: It should be noted that the solutions used in this method are similar to those used in the Brashear process. The same precautions should therefore be taken to guard against the formation of an explosive mixture.

The solutions should be kept and the silvering done at a temperature of about 15°C or 59°F. In hot weather ice should be used in order to keep the temperature of the solutions below 18°C (64°.F). If the temperature rises above this point there is danger of the formation of small amounts of silver compounds, which are very explosive.

Neither the silvering solution nor the spent solution, which flows from the silvered surface, should be kept in open bottles or trays which are favorable to evaporation. When these solutions evaporate there is a possibility that the residue left at the surface of the liquid may contain small quantities of these explosive silver compounds. Consequently the spent solutions should be discarded as soon as the silvering is completed.

THE ROCHELLE SALTS PROCESS.

Solution A:

Silver nitrate	10 grams
Distilled water	100 grams

To this add concentrated ammonia until the precipitate first formed is just redissolved (care used in mixing well).

Then drop by drop add 10 per cent solution of silver nitrate in water until the solution is opalescent.

Dilute to 1 liter, filter and bottle.

Solution B:

Silver nitrate	2 grams
Rochelle salt	1.66 grams
Distilled water	1 liter

Bring the solution of silver nitrate in distilled water to a boil. Then add Rochelle salt dry. Boil 5 minutes, stirring all the time. Filter and keep in dark bottle.

To silver:

Use equal parts A and B at room temperature. The deposition of silver on the glass surface will be more rapid and complete if that surface is several degrees warmer than the solution.

Silvering of Large Mirrors.

At the Bureau of Standards, mirrors as large as 18"x24" have been silvered, both by the Brashear Process and the first Rochelle Salts Process as previously described. In each case the glass, after having been thoroughly cleaned, was treated with the stannous chloride solution. In general, a heavier coat is obtained by use of the Brashear Process which, of course necessitates having the temperature below 18°C in order to avoid the danger of the formation of explosive compounds.

If the glass to be silvered is fairly thick, a band of paraffined paper tied tightly around the glass and "cemented" to the edge with a soldering iron, has been found to serve for retaining the silvering fluid. However, if the edge of the glass is not flat, but rounded, there is difficulty in attaching the paraffined paper sufficiently well to prevent leaking of the fluid around the edges of the glass. In such cases the use of a shallow wooden box, thoroughly paraffined, with the depth of the fluid about 3/4" above the glass surface, is recommended. It is advisable to rock the box while the silvering is in process to avoid the deposition of "bloom" which is generally formed After the solution is completely spent the bloom may be washed off with clean water.

A SECOND ROCHELLE SALTS PROCESS.

There are a variety of formulae which employ Rochelle salts or tartaric acid as a reducing agent. These formulae are the ones ordinarily employed commercially in making the better grades of mirrors where the silver coat is on the back surface of the glass, and is protected by copper plating or painting. The glass sheets are cleaned with nitric acid, or by allowing them to stand in a concentrated solution of potassium dichromate in dilute sulphuric acid. After rinsing, the sheets are rubbed with a tin chloride solution and rinsed. The following formula has given good results in use:

The Reducing Agent:

Make a saturated solution, at about 18°C, of Rochelle salts in distilled water.

The Silver Solution:

Dissolve 42.8 grams of silver nitrate in as little water as possible, just clear up with strongest ammonia, filter through cotton, and dilute to 250 cc.

The solutions are mixed as follows:

At 20°C (40 cc reducing solution,
(20 cc silver solution,
(400 cc distilled water.

at 30°C (30 cc reducing solution,
(20 cc silver solution,
(400 cc distilled water.

The process is complete in from 40 to 60 minutes, depending on the temperature. For semitransparent coats (half-silvering) stop the process sooner. If coat is not thick enough, rinse off the spent solution and any sediment and repeat with a fresh solution.

THE FORMALDEHYDE PROCESS.

The Reducing Solution:

Distilled water	200 cc.
Merck's formaldehyde	40 cc.

The Silver Solution:

Distilled water	1000 cc,
Silver nitrate	21.6 grams.

Add strong ammonia gradually and clear up fully.

Mix these two solutions thoroughly and quickly and pour on the mirror; keep solution in motion. Then the solution is clear, with the exception of small black grains like gunpowder, and these appear to be depositing on the silver coat, the process is complete. Rinse thoroughly. Temperature about 20°C (68°F).

THE CATHODIC PROCESS.

The cathodic method of silvering is particularly useful as a laboratory process for a half-silvering and for silvering delicate articles, those which must be kept dry, and in cases where portions of the surface are to be left clear.

The apparatus consists of a glass bell-jar ground on the bottom to fit a metal plate, generally aluminum, to which it can be sealed by melting wax (about six parts of beeswax to four parts of rosin) around the edges. A clean and polished plate of silver, without projecting points, is mounted on an aluminum rod enclosed in a glass tube, and forms the cathode, the bottom plate acting as the anode. If the bottom plate is of glass, a rod must be cemented in to act as the anode. The cathode should preferably be large enough to cover the object to be plated; the object is placed on a stand so as to be 2 or 3 cm from the cathode. If a sufficiently large plate is obtainable, a plane grid of silver bars or wires may be used as a cathode.

The anode and cathode are connected to a transformer giving 5,000 or 10,000 volts, or to an induction coil, and the apparatus exhausted till the cathode's dark space extends beyond the object to be plated. This space should be of the order of one or two cm. The object to be plated must be clean and dry and, if it is transparent, a piece of white paper with a black cross marked on it should be placed beneath so that the progress of the plating can be observed. Metals other than silver can be plated by replacing the silver with a plate or grid of the metal required.

THICKNESS OF THE FILM.

Nobili's rings may be used to determine the thickness of a silver film on glass. Place a very minute crystal of iodine on the silver surface; obviate the effect of air drafts by placing the over it a small beaker which should not, however, fit the surface tightly. Count the rings which will form around the crystal in a few minutes.

No. of ring	Thickness of film	
To first dark ring	0.000,018 mm	
To second bright ring	37	thin
To third " "	74	
To fourth " "	110	thick
To fifth " "	147	
To sixth " "	184	
To seventh " "	220	very thick

DRYING AND BURNISHING.

Stand mirror on edge to dry and remove water at edges with blotting paper.

For front surface silvering, burnish, after mirror is perfectly dry, by making a pad of softest chamois skin wrapped around a wad of cotton. Rub a very little of best optical rouge into this pad and go over entire surface in circular strokes. Dust mirror and pad occasionally during the burnishing to avoid scratches.

PROTECTIVE BACKING.

For back surface silvering, as in ordinary looking glasses, the silver coat should be covered with one or two coats of ordinary shellac, and later covered with paint or other protector.

A transparent covering is often useful for the protection of front surface mirrors. A suitable lacquer can be prepared by diluting clear Egyptian lacquer with amyl acetate until the consistency is such that the fluid flows freely and uniformly over the surface when it is tilted. The tilting allows the excess lacquer to flow off the surface. Care must be taken not to have the coat of lacquer too thin or interference colors will appear.

THE AMALGAM METHOD.

There has been no occasion at the Bureau to employ the amalgam method for silvering, as the chemical deposition of silver is much preferable where facilities are at hand for its use. However, to those interested, we offer the following article found in the Scientific American Cyclopedia of Formulas, edited by Albert H. Hopkins, published by Munn & Company, New York, N. Y.

(The article follows on the next page.)

"Amalgam for coating mirrors is the completely saturated compound of two metals, mercury and tin, hardened in a crystalline form. It is prepared directly on the mirror plate by the following method: A sheet of tinfoil, somewhat larger than the mirror, is placed upon the silvering table, which has a marble top, adjustable by screws to either a horizontal or inclined position. After the sheet of foil has been spread out, and made perfectly smooth, a small quantity of mercury is poured over it, and evenly distributed by means of a woolen cloth. When the whole sheet has been dampened with mercury, more is poured on to make a layer 1/8" thick, and the plate of glass, first thoroughly cleaned (which is best done by strong soda lye), is laid upon it. To do this a strip of paper is pushed in between the mercury and the layer of amalgam at one side and the edge of the glass laid upon it, and the plate is then pushed slowly forward across the table and finally allowed to settle down upon it. The table is now slightly inclined so that the mercury can drop off and the plate settle firmly against the amalgam. When the mercury has ceased to run off, except very slowly, soft thick woolen cloths are spread over the plate and weights are put on it to press out all excess mercury. At the same time the table is somewhat sharply inclined. The weights may be removed in about 30 hours as the amalgam will by this time adhere closely to the glass. The plate of glass is set upon edge and a little more mercury will drop off. After about four weeks the mirror may be considered as finished.

If curved glass plates are to be made into mirrors, the amalgam is prepared by itself and, after spreading it as evenly as possible upon the plate, the latter is heated until the amalgam melts.

Great care must be taken to have the plates of glass perfectly clean, as the amalgam will only adhere to a bright surface. The cleansing is best performed by means of washing with strong soda lye. Since the process of making mirrors by the reduction of silver solutions upon the glass has been known, and can be quickly and cheaply carried out, the use of amalgam is falling more and more into disuse, a desirable condition in view of the fact that the work is very injurious to the health of the workmen employed, who must constantly breathe the fumes of the mercury."

Repairing a Damaged Mirror.

The following article from the Scientific American Cyclopedia of Formulas describes the repair of mirrors by means of a tin-mercury amalgam:

"1. Place the mirror face downward on a table and with a bit of cotton clean off the spot to be silvered by rubbing it with a pledget of cotton. Now spread over the spot a piece of tinfoil a little larger than the area to be repaired and, after spreading out smoothly, let fall on the center of it a drop of metallic mercury, and with a bit of chamois rub the foil until it becomes brilliant. Now place over the new amalgam a sheet of smooth writing paper and on it pile books or weights of any sort and leave it over night. The amount of weight needed is not great - just sufficient to keep the new amalgam in close contact with the glass. The amount of mercury needed should correspond as nearly as possible to 3 drachms to the square foot of surface to be resilvered. We may say, in conclusion, that while the above reads "easy" the job itself requires considerable practice to do it neatly and with dispatch."

"2. If mirrors coated become damaged, they may sometimes be successfully repaired as follows:

Clean the bare portion of the glass by rubbing it gently with fine cotton, taking care to remove any trace of dust or grit. If this cleaning be not done very carefully, defects will appear around the place repaired. With the point of a penknife cut upon the back of another looking glass around a portion of the silvering of the required form, but a little larger. Upon it place a small drop of mercury; a drop the size of a pin's head will be sufficient for a surface equal to the size of the nail. The mercury spreads immediately, penetrates the amalgam to where it has been cut off with the penknife, and the required piece may be lifted and removed to the place to be repaired. This is the most difficult part of the operation. Then press lightly the renewed portion with cotton; it hardens almost immediately, and the glass presents the same appearance."

SULPHIDE MIRRORS.

Requests are frequently received for methods of preparation of dark colored mirrors. The following instructions for preparing such mirrors of metal sulphide are translated from an article by O. Hauser and Ernst Biesalski found in the Chemiker Zeitung 34, p.1079, (1910). This method has been tried by us and found to yield a satisfactory reflecting surface.

"Simple Preparation of Metal Sulphide Mirrors."

"By chance during a research we discovered that thiourea undergoes decomposition by alkali in water and alcohol solution at ordinary temperatures by which, among other things, H_2S is given off. If this decomposition takes place in the presence of the salt of a heavy metal its sulphide is precipitated upon the glass with a faultless mirror surface. By this method one can make sulphide mirrors on a glass of any desired size without difficulty. This is particularly true for lead salts."

"Preliminary experiments have shown that such mirrors can be used as electric resistances of small diemnsions with a relatively high resistance, and they are perhaps useful for other purposes. We give the following formula for the preparation of 9x12 glass plate. One supports it upon four bits of paraffin in a suitable developing tray and flows over the plate a solution of 1 gram of thiourea in 50-75 cc of water, adds 50-75 cc of a dilute solution of lead acetate and finally 25 cc of dilute potassium hydroxide or ammonia solution, mixing continuously. Immediately the white lead hydroxide becomes dark and after a short time is all changed into black lead sulphide, and a firm, uniform and deeply black metallic sulphide mirror forms in half an hour, first upon the lower and then upon the upper side of the glass plate. For larger plates a somewhat longer time is required. Without further treatment it is then washed with water and dried. To see the mirror surface one rubs the deposit off the upper surface of the glass plate."

REFERENCES.

The following brief bibliography gives articles which

should be consulted if further information on this subject is desired.

Brashear's Method, by F.L.O.Wadsworth, Astrophysical Journal, I, p.352, (1895).
The Deposition of Metallic Silver upon Glass, by F.D.Chattaway, Chemical News, 96, Sept.27 and Oct.4, 1907, pp.151-153 and 163-164.
Methods of Silvering Mirrors, by H.D.Curtis, Publications of Astronomical Society of the Pacific, 23, p.13, (1911).
Half-Silvered Mirrors, by H.L.Smith, British Journal of Photography, vol.LXXIV, No.3511, pp.492-493, August 19, 1927.
The Construction of a Silvered Glass Telescope, by Henry Draper, Smithsonian Contributions to Knowledge, vol.XIV (1856), also, vol.34, p.6.
The Preparation of Coppered Glass Mirrors, by F.A.H.French, Transactions of the Optical Society, vol.XXV, No.5,(1923-24), published by The Optical Society, Imperial College of Science and Technology, South Kensington, London, S.W., England.
The Making of Reflecting Surfaces, published by the Optical Society (address as above).
Deposition of Metals by Cathodic Sputtering in Vacuuo, by F. Ellerman and H. D. Babcock, p.35, "The Making of Reflecting Surfaces", published as above.