National Bureau of Standards
Library, N.W. Bldg.
JUL 8 1964

Reference book not to be
taken from the library.

NBS

Technical Note 241

CALCULATIONS FOR COMPARING TWO-POINT AND FOUR-POINT PROBE RESISTIVITY MEASUREMENTS ON RECTANGULAR BAR-SHAPED SEMICONDUCTOR SAMPLES

LYDON J. SWARTZENDRUBER

U. S. DEPARTMENT OF COMMERCE
NATIONAL BUREAU OF STANDARDS

AUTHENTICATED
U.S. GOVERNMENT
INFORMATION
GPO

THE NATIONAL BUREAU OF STANDARDS

The National Bureau of Standards is a principal focal point in the Federal Government for assuring maximum application of the physical and engineering sciences to the advancement of technology in industry and commerce. Its responsibilities include development and maintenance of the national standards of measurement, and the provisions of means for making measurements consistent with those standards; determination of physical constants and properties of materials; development of methods for testing materials, mechanisms, and structures, and making such tests as may be necessary, particularly for government agencies; cooperation in the establishment of standard practices for incorporation in codes and specifications; advisory service to government agencies on scientific and technical problems; invention and development of devices to serve special needs of the Government; assistance to industry, business, and consumers in the development and acceptance of commercial standards and simplified trade practice recommendations; administration of programs in cooperation with United States business groups and standards organizations for the development of international standards of practice; and maintenance of a clearinghouse for the collection and dissemination of scientific, technical, and engineering information. The scope of the Bureau's activities is suggested in the following listing of its four Institutes and their organizational units.

Institute for Basic Standards. Electricity. Metrology. Heat. Radiation Physics. Mechanics. Applied Mathematics. Atomic Physics. Physical Chemistry. Laboratory Astrophysics.* Radio Standards Laboratory: Radio Standards Physics; Radio Standards Engineering.** Office of Standard Reference Data.

Institute for Materials Research. Analytical Chemistry. Polymers. Metallurgy. Inorganic Materials. Reactor Radiations. Cryogenics.** Office of Standard Reference Materials.

Central Radio Propagation Laboratory.** Ionosphere Research and Propagation. Troposphere and Space Telecommunications. Radio Systems. Upper Atmosphere and Space Physics.

Institute for Applied Technology. Textiles and Apparel Technology Center. Building Research. Industrial Equipment. Information Technology. Performance Test Development. Instrumentation. Transport Systems. Office of Technical Services. Office of Weights and Measures. Office of Engineering Standards. Office of Industrial Services.

---

* NBS Group, Joint Institute for Laboratory Astrophysics at the University of Colorado.
** Located at Boulder, Colorado.

NATIONAL BUREAU OF STANDARDS

Technical Note 241

ISSUED JUNE 1, 1964

CALCULATIONS FOR COMPARING TWO-POINT AND FOUR-POINT PROBE RESISTIVITY MEASUREMENTS ON RECTANGULAR BAR-SHAPED SEMICONDUCTOR SAMPLES

Lydon J. Swartzendruber

NBS Technical Notes are designed to supplement the Bureau's regular publications program. They provide a means for making available scientific data that are of transient or limited interest. Technical Notes may be listed or referred to in the open literature.

For sale by the Superintendent of Documents, Government Printing Office
Washington, D.C., 20402 - Price 25 cents

Contents

1. Introduction.....1

2. Expressions for the Correction Factors.....2

2.1 General potential expression for a bar with plated ends.....2

2.2 General potential expression for a bar with unplated ends.....4

2.3 Correction factor for the case of unplated ends.....4

2.4 Correction factor for the case of plated ends.....5

3. Computation of the Correction Factors.....5

3.1 Series convergence.....5

3.2 Fortran program for use in the case of plated ends.....7

3.3 Fortran program for use in the case of unplated ends.....7

4. Errors Due to Geometrical Factors.....7

4.1 Errors due to probe displacement.....7

4.2 Errors due to dimensional inaccuracy in the bar size and shape.8

4.3 Effect of non-uniform end plating.....8

4.4 Effect of unequal probe spacing.....9

5. Conclusion.....11

Appendix I - Program for Plated Ends Correction Factor.....13

Appendix II- Program for Unplated Ends Correction Factor.....18

Appendix III-Program for Non-Uniform End Plating Error.....23

CALCULATIONS FOR COMPARING TWO-POINT AND FOUR-POINT PROBE RESISTIVITY MEASUREMENTS ON RECTANGULAR BAR-SHAPED SEMICONDUCTOR SAMPLES

Lydon J. Swartzendruber

Fortran codes are given which enable the calculation of four-point probe correction factors for use with bar-shaped samples. Samples with either plated or unplated ends are considered. The errors that arise due to probe misplacement, inaccurate sample size and shape, and non-uniform end plating are also considered. Use of the results permits accurate comparison of two-point and four-point probe resistivity measurements. The codes are in Fortran II language and were written for an IBM 7090 computer.

1. INTRODUCTION

When measuring the resistivity of a semiconductor, such as silicon or germanium, the four-point probe as described by Valdes[1] is very convenient and is in common use. However, the four-point probe may give inaccurate results for several reasons, such as charge carrier injection by the current probes and surface leakages. The accuracy attained by a four-point probe measurement is hence dependent on such factors as the semiconductor sample material, the probe material, the sample surface finish, and the probe pressure. Since the two-point probe is generally a more accurate method when a bar-shaped sample can be formed, a comparison of two-point and four-point probe measurements on the same bar sample will indicate the accuracy being obtained by use of the four-point probe. Thus the effect of different experimental conditions can be assessed, and the range of validity of four-point probe measurements can be determined. Also, such a comparison can be used to calibrate four-point probe measuring apparatus.

When using the two-probe method on a rectangular bar-shaped sample, as illustrated in Figure 1, the sample resistivity is given by

$$\rho = \frac{V}{I}\frac{ah}{s} \tag{1}$$

where ρ is the sample resistivity, V is the potential difference measured between the two voltage probes, I is the uniform current being passed through the sample, a is the sample width, h is the sample height, and s is the separation between the two probes.

---

[1] L.B. Valdes, "Resistivity Measurements on Germanium for Transistors", Proc. IRE, 42, 420 (1954).

When using the four-point probe method, as illustrated in Figure 2, the sample resistivity is given by

$$\rho = \frac{V}{I}(2\pi s)\frac{1}{F} \tag{2}$$

where ρ is the resistivity, V is the potential difference measured between the two voltage probes, I is the current being passed through the two outer probes, s is the probe spacing, and F is a correction factor which is a function of the sample width, height, and length, the probe spacing, and the position of the probe on the sample. In calculating the correction factor, F, ideal conditions are assumed, i.e., no carrier injection, no surface leakage, etc.

It is of interest to note that, as can be seen by the reciprocity theorem, the same correction factor will apply when the roles of the current and voltage probes are reversed.

The correction factor, F, has been derived by Hansen[2] for a four-point probe on a rectangular bar sample having all surfaces in contact with an insulating medium, and has been extended by Reber[3] to the case where the bar ends are plated with a highly conducting material and for a more general type of probe placement than shown in Figure 2. General potential formulas are presented below, along with the correction factor formulas for the most interesting cases. To facilitate calculation of the correction factors, Fortran programs suitable for use on the IBM 7090 and similar machines are given. Several representative cases are worked out and a discussion of the errors introduced by geometrical factors and poorly plated end contacts is given.

2. EXPRESSION FOR THE CORRECTION FACTORS

2.1 General Potential Expression for a Bar with Plated Ends

When the ends of the bar are plated with a highly conductive material, with the negative current probe located at $\vec{r}_- = (x_-, h, z_-)$, (see Figure 2 for definition of coordinate system), and with the positive current probe located at $\vec{r}_+ = (x_+, h, z_+)$, the potential, $\phi(x,y,z)$, at any arbitrary point between the two current probes ($z_+<z<z_-$), as shown by Reber[3], is given by

$$\phi(x,y,z) = \sum_{\substack{m=o \\ (m,n)\neq o,o}}^{\infty} \sum_{n=o}^{\infty} \cos\left(\frac{m\pi x}{a}\right)\cos\left(\frac{n\pi y}{2h}\right) \left\{C_\alpha \sinh(\alpha z)+D_\alpha \cosh(\alpha z)\right\} - \frac{\rho I}{ah} z$$

---

[2] E. B. Hansen, "On the Influence of Shape and Variations in Conductivity of the Sample on Four-Point Measurements," Appl. Sci. Res., 8, 93 (1960)

[3] J. M. Reber, "Potential Distribution in a Rectangular Bar for Use with Four-Point Probe Measurements," Solid-State Electronics, (to be published)

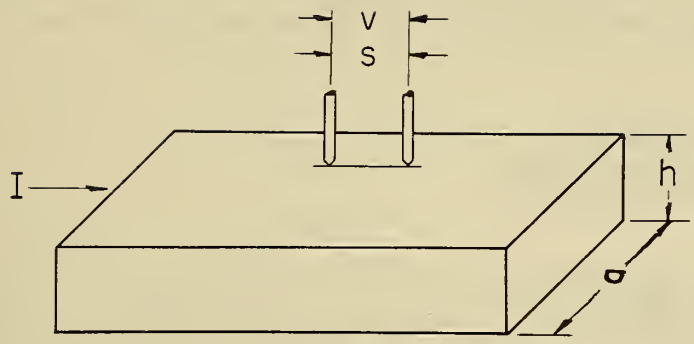

Figure 1. Two-point probe on a rectangular bar-shaped sample.

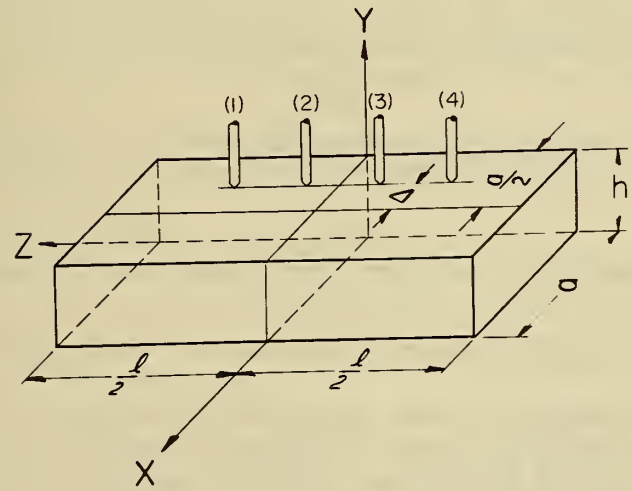

Figure 2. Four-point probe on a rectangular bar-shaped sample. The probe is centered along the length of the bar and displaced a distance Δ from the center of the bar.

where

$$C_\alpha = \frac{A_\alpha}{\sinh(\alpha b)} \left\{\sinh[\alpha(z_- - b)]\cos\left(\frac{m\pi x_-}{a}\right) - \sinh[\alpha(z_+ + b)]\cos\left(\frac{m\pi x_+}{a}\right)\right\}$$

$$D_\alpha = \frac{A_\alpha}{\cosh(\alpha b)} \left\{\sinh[\alpha(z_- - b)]\cos\left(\frac{m\pi x_-}{a}\right) + \sinh[\alpha(z_+ + b)]\cos\left(\frac{m\pi x_+}{a}\right)\right\}$$

$$A_\alpha = \frac{2I\,\rho\,\cos\left(\frac{n\pi}{2}\right)}{ah\alpha(1+\delta_{o,m})(1+\delta_{o,n})}$$

$$\alpha = \left[\left(\frac{m\pi}{a}\right)^2 + \left(\frac{n\pi}{2h}\right)^2\right]^{1/2}$$

and

$$\delta_{o,s} = \begin{cases} 1 \text{ if } s=o \\ o \text{ if } s\neq o\ . \end{cases} \tag{3}$$

Above, and in what follows, the letter b is used to denote one-half the length of the bar.

2.2 General Potential Expression for a Bar with Unplated Ends

If, instead of having the ends of the bar plated, they are unplated, then we have the same expression for $\phi(x,y,z)$ with $(z_+<z<z_-)$ as given by equation (3), except C_α and D_α are replaced by

$$C_\alpha = -\frac{A_\alpha}{\cosh(\alpha b)} \left\{\cosh[\alpha(z_- - b)]\cos\left(\frac{m\pi x_-}{a}\right) + \cosh[\alpha(z_+ + b)]\cos\left(\frac{m\pi x_+}{a}\right)\right\}$$

and

$$D_\alpha = -\frac{A_\alpha}{\sinh(\alpha b)} \left\{\cosh[\alpha(z_- - b)]\cos\left(\frac{m\pi x_-}{a}\right) - \cosh[\alpha(z_+ + b)]\cos\left(\frac{m\pi x_+}{a}\right)\right\}. \tag{4}$$

2.3 Correction Factor for the Case of Unplated Ends

The correction factor, F_1, for an in-line four-point probe array when placed on a bar sample as shown in Figure 2, with all surfaces of the bar in contact with an insulating medium, was first worked out by Hansen[2]. It can also be obtained by using the general solution of equation (4) and is given by

$$F_1 = 2\pi s\left(\frac{s}{ah} + A_1 + B_1\right)$$

where

$$A_1 = \frac{8}{ah} \sum_{\substack{m=o \\ (m,n)\neq(o,o)}}^{\infty} \sum_{n=o}^{\infty} \frac{\cosh[\beta(b-3s/2)]\sinh(\beta s/2)}{(1+\delta_{o,m})(1+\delta_{o,n})\beta\cosh(\beta b)}$$

$$B_1 = \frac{8}{ah}\sum_{m=1}^{\infty}\sum_{n=o}^{\infty}\frac{(-1)^{m-1}\sin^2(\frac{m\pi\Delta}{a})\cosh[\gamma(b-3s/2)]\sinh(\gamma s/2)}{(1+\delta o,n)\gamma\cosh(\gamma b)}$$

$$\beta = (\frac{2\pi}{a})\,[m^2 + (na/2h)^2]^{1/2},$$

$$\gamma = (\pi/a)[m^2 + (na/h)^2]^{1/2}\ . \qquad (5)$$

The resistivity of the sample is found by using this correction factor in equation (2). This solution has the nice feature that if the sidewise displacement of the probe, Δ, is zero, the series for B_1 is identically zero. This solution only applies, however, when the probe is centered lengthwise on the sample.

2.4 Correction Factor for the Case of Plated Ends

The correction factor, F_2, for an in-line four-point probe array placed on a bar sample as shown in Figure 2 with the bar having its ends plated with conductive material, is shown by Reber[3] to be

$$F_2 = 2\pi s(s/ah + A_2 + B_2)$$

where

$$A_2 = (\frac{8}{ah})\sum_{\substack{m=o\\(m,n)\neq o,o}}^{\infty}\sum_{n=o}^{\infty}\frac{\sinh[\beta(b-3s/2)]\sinh(\beta s/2)}{(1+\delta o,m)(1+\delta o,n)\beta\,\sinh(\beta b)}$$

and

$$B_2 = (\frac{8}{ah})\sum_{m=1}^{\infty}\sum_{n=o}^{\infty}\frac{(-1)^{m-1}\sin^2(\frac{m\pi\Delta}{a})\sinh[\gamma(b-3s/2)]\sinh(\gamma s/2)}{(1+\delta o,n)\gamma\,\sinh(\gamma b)} \qquad (6)$$

and where β, γ, and δ are as defined in equations (3) and (5). This equation can be obtained by using the general solution of equation (3). Note that it is the same as equation (5) except that all hyperbolic cosine terms have been replaced by hyperbolic sine terms. The resistivity of the sample can then be found by using this correction factor in equation (2).

3. COMPUTATION OF THE CORRECTION FACTORS

3.1 Series Convergence

In calculating the correction factors, F_1 and F_2, we need to know the number of terms in each series which must be summed in order to achieve a specified accuracy. In equations (5) and (6), let the summations indices m and n in the series A_1, B_1, A_2 or B_2 become very large,

then all the hyperbolic sine terms and all the hyperbolic cosine terms can be replaced by their limiting exponential forms. If the summation has been carried out for every combination of m and n up to m=M and n=N, then good approximations for the remainders, R_A for series A_1 or A_2, and R_B for series B_1 or B_2, are given by

$$R_A = \frac{8}{ah} \int_{m=N}^{\infty} \int_{n=N}^{\infty} \frac{\exp\{-\frac{2\pi s}{a}[m^2 + (\frac{na}{2h})^2]^{1/2}\}}{\frac{2\pi}{a}[m^2 + (\frac{na}{2h})^2]^{1/2}} \, dm \, dn \tag{7}$$

and

$$R_B = \frac{8}{ah} \int_{m=N}^{\infty} \int_{n=N}^{\infty} \frac{\exp\{-\frac{\pi s}{a}[m^2 + (\frac{na}{2h})^2]^{1/2}\}}{\frac{\pi}{a}[m^2 + (\frac{na}{h})^2]^{1/2}} \, dm \, dn. \tag{8}$$

Now in (7) make the substitution x=m and y=na/2h and let M_A equal either (a/2h)N or N, whichever is smaller. In (8) make the substitution x=m and y=na/h and let M_B equal (a/h)N or N, whichever is smaller. Then we have for the remainders

$$R_A < \frac{8}{\pi a} \int_{x=M_A}^{\infty} \int_{y=M_A}^{\infty} \frac{\exp\{-\frac{2\pi s}{a}(x^2+y^2)^{1/2}\}}{(x^2 + y^2)^{1/2}} \, dx \, dy \tag{9}$$

and

$$R_B < \frac{8}{\pi a} \int_{x=M_B}^{\infty} \int_{y=M_B}^{\infty} \frac{\exp\{-\frac{\pi s}{a}(x^2+y^2)^{1/2}\}}{(x^2 + y^2)^{1/2}} \, dx \, dy. \tag{10}$$

These integrals can be estimated by converting them to polar form and integrating from a circle of radius M_A or M_B to infinity. This increases the value of the integrals, but still gives a reasonable upper bound for the remainder. One obtains, then,

$$R_A < \frac{8}{\pi s} \exp(-\frac{2\pi s}{a} M_A) \tag{11}$$

and

$$R_B < \frac{16}{\pi s} \exp(-\frac{\pi s}{a} M_B) \tag{12}$$

Since the factor F is always one or greater, the values of M_A and M_B required to make $2\pi s R_A$ and $2\pi s R_B$ small in comparison to one will yield the required number of terms that should be summed to insure the accuracy of the computation.

3.2 Fortran Program for Use in the Case of Plated Ends

The program for computing F_2, the correction factor for a four-point probe on a bar sample with plated ends, is given in Appendix I. The formats for the required data cards are also illustrated, as is the data printout. The program corresponds to the probe being centered on the bar lengthwise and displaced sidewise a distance DELTA. The values of the sample width W, height H, overall length of the bar EL, probe spacing S, sidewise displacement DELTA, and the desired accuracy ACC, are read in on data cards as specified in statements 146 and 147. The number of different conditions to be calculated is read in as specified in statements 143 and 144, and hence any number of various conditions can be computed on a single run. The units on W, H, EL, S and DELTA are arbitrary, but must be consistent. ACC should be given in decimal units, i.e., if 0.1% accuracy is desired ACC = 0.001. The program consists of a main program, which appears last, four function subprograms, and two subroutines. The printout is as specified in statements 151 and 152. The number of terms computed for any single value of F_2 is automatically limited to 10^5, which should be adequate for most practical purposes. If more than 10^5 terms would have been necessary to achieve the required accuracy, the accuracy actually achieved is computed and printed out with the answer. The code is as written in FORTRAN II language to be run on National Bureau of Standards' modified BELL SYSTEM. Some slight changes in input and output statements would be required to run the program on the II B MONITOR SYSTEM. A short table of values for F_2 computed by use of the program is given in Table I.

3.3 Fortran Program for Use in the Case of Unplated Ends

This program computes F_1, the correction factor for a four-point probe on a bar sample with unplated ends and is given in Appendix II. It is identical to the program for plated ends, Appendix I, except for statements 29, 31, 40, 43, 59, 61, 70 and 73, which are changed respectively to the statements given in Appendix II. The same data cards illustrated in Appendix I are used. The code is as written in FORTRAN II language to be run on National Bureau of Standards' modified BELL SYSTEM. Some slight changes in input and output statements would be required to run the program on the II B MONITOR SYSTEM. A short table of values computed by the program for F_1 is given in Table II.

4. ERRORS DUE TO GEOMETRICAL FACTORS

4.1 Errors Due to Probe Displacement

When a four-point probe measurement is made, the correction factor will usually be calculated for the probe symmetrically placed in the center of the bar. Since experimentally the probe cannot be exactly centered, it will be displaced from the center along the length of the bar a distance ε and sidewise a distance Δ. The effect of a sidewise displacement, Δ, is included in the program for the correction factor and

can be directly calculated. For example, as can be seen from Table I, for a probe spacing of 0.0625 in. and a bar 0.1 in. wide by 0.1 in. high by 0.5 in. long, an inadvertent sidewise displacement of 0.001 in. would introduce an error of about 0.01% in the correction factor.

The effect of a lengthwise displacement can also be estimated by use of the program for the correction factor. If the probe is displaced lengthwise an amount ε on a sample with unplated ends, the correction factor will be increased. However, this increase will be less than the increase for a symmetrically placed probe caused by a decrease in sample length of 2ε. For example, from Table II, for a probe spacing of 0.0625 in. and a sample 0.1 in. wide by 0.1 in. high by 0.5 in. long, a decrease in length of 0.1 in. causes the correction factor to increase about 0.02%. Thus the probe could be displaced lengthwise a distance 0.05 in. off center without introducing errors larger than about 0.02%. The same argument applies for a sample with plated ends except that the correction factor decreases with decreased length.

4.2 Errors Due to Dimensional Inaccuracy in the Bar Size and Shape

We wish to know the dimensional tolerances required on the bar length, width and height in order to achieve a specified accuracy in the measurement. For a two-point probe measurement the accuracy will depend on how well the cross sectional area of the sample is known. Thus if the width and height are both known within, say, 1%, then the error due to bar size tolerance can be as high as 2%.

The required bar size tolerances when using the four-point probe are easily calculated by use of the correction factor programs. From its known dimensions, the irregular bar can be bounded by two perfect bars, one which completely encloses the irregular bar, and one which is completely enclosed by the irregular bar. Then the correction factor lies between that obtained for the two perfect bars. An example of the effect of the tolerance due to a single dimension can be obtained from Table I. There it is seen that, for a bar 0.1 in. high by 0.1 in. wide by 0.5 in. long, with a probe spacing of 0.0625 in., a height or width change of 0.1% causes a change in correction factor of 0.1%, while a length change of 20% causes a correction factor change of only about 0.01%.

4.3 Effect of Non-Uniform End Plating

In general, a perfect plating is hard to achieve. When making two-point probe measurements, a non-uniform plating on the bar ends will disturb the uniformity of current through the sample, thereby introducing an error into measurement. In order to see how necessary a uniform plating is, consider the worst possible case of non-uniform end plating as shown in Figure 3. Here the end plating is reduced to a point current source, and the measurement is being made with the probe along the edge,

as shown. The potential, V, measured by the probe can be found with the aid of equation (4) to be

$$V = \rho I \frac{s}{ah} (1 + \delta)$$

where

$$\delta = \frac{4}{s} \sum_{\substack{m=o \\ (m,n \neq o,o)}}^{\infty} \sum_{n=o}^{\infty} \frac{(-1)^m (-1)^n}{(1+\delta om)(1+\delta on)} \left[\frac{\sinh(\gamma d) - \sinh \gamma(d-s)}{\gamma \sinh (\gamma b)} \right]$$

$$\gamma = (\pi/a) [m^2 + (na/h)^2]^{1/2}$$

$$b = \ell/2$$

A Fortran program to calculate δ is given in Appendix III. It is seen that δ is a measure of the error introduced into a measurement of ρ if uniform current were to be assumed. A graph of δ vs. the ratio of probe displacement, d, to half bar length, b, is shown in Figure 4 for several different cases of width, length and height. This figure shows the importance of uniform end plating. If the bar length is 20 times the probe spacing and the width and height are each equal to 4 probe spacings, an error greater than 1% occurs over most of the bar length, and the error can be as high as 26% near the bar ends. However, if the experimental conditions are chosen as in curve (1) of Figure 4, then any error due to non-uniform end plating can be neglected over a large portion of the bar.

4.4 Effect of Unequal Probe Spacing

One wishes to know the effect of probe spacing tolerance on the value of the correction factor. In the limiting case of $s \gg a$ and $s \gg h$, the resistivity is given by equation (1). In this case only the spacing of the two inner probes is of importance and

$$\Delta\rho/\rho = -\Delta s/s$$

where $\Delta s/s$ is the fractional change in spacing of the two inner probes and $\Delta\rho/\rho$ is the fractional change in the measured resistivity.

In the limiting case where $s \ll a$, $s \ll h$, and $s \ll$ the bar length, the factor F of equation (2), as given by Valdes[1], is

$$F = S \left(\frac{1}{S_1} + \frac{1}{S_3} - \frac{1}{S_1+S_2} - \frac{1}{S_2+S_3}\right)$$

where S_1 is the spacing between probes (1) and (2) (see Figure 2), S_2 is the spacing between the two inner probes (2) and (3), S_3 is the spacing between probes (3) and (4), and S can be interpreted as the mean probe spacing. If $S_2 = S_3 = S$ and the spacing S_1 varies slightly, the fractional deviation in measured resistivity is

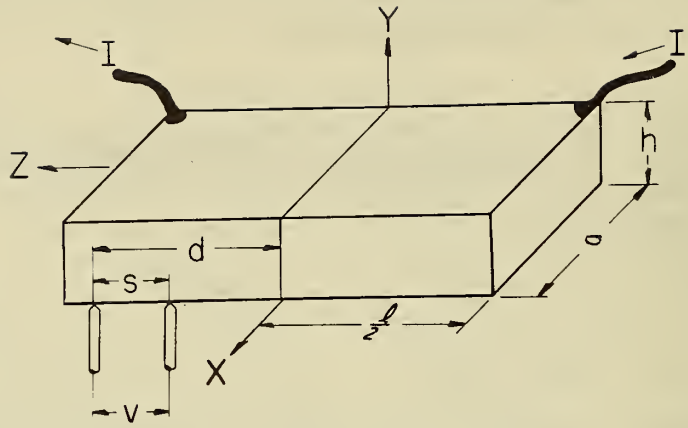

Figure 3. Geometry to illustrate the worst possible case of non-uniform end plating. The current passes in and out of the bar ends only at the corners as shown. The largest effect is for a two-point probe located along the corner as shown.

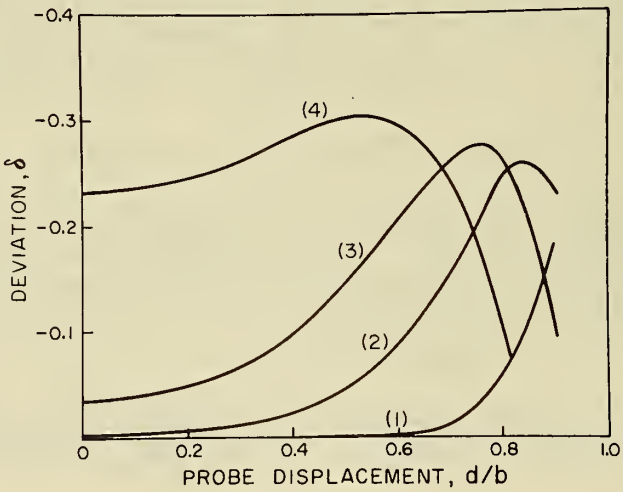

Figure 4. Graph of the deviation, δ, caused by the non-uniform plating as shown in Figure 3, vs. the probe displacement d/b, where d is as shown in Figure 3 and b is the half bar length, $\ell/2$. Curve (1) is for a=0.1, h=0.1, ℓ=1.0 and s=0.0625. Curve (2) is for a=4.0, h=4.0, ℓ=20.0 and s=1.0. Curve (3) is for a=6.0, h=6.0, ℓ=20.0 and s=1.0. Curve (4) is for a=10.0, h=10.0, ℓ=20.0 and s=1.0.

$$\frac{\Delta\rho}{\rho} = \frac{3}{4} \frac{\Delta S_1}{S}$$

If $S_3=S$ and $S_1+S_2=2S$ but S_2 varies slightly from S, then the fractional deviation in measured resistivity is

$$\frac{\Delta\rho}{\rho} = \frac{5}{4} \frac{\Delta S_2}{S}$$

Thus, in the limiting cases, the percentage error in measured resistivity is roughly the same as the percentage error in probe spacing, and one expects this also to be true for the intermediate cases. The effect of a sidewise displacement of a single needle is of second order and will normally be negligible if ordinary tolerances are held.

5. CONCLUSION

Using the Fortran programs given, the correction factors necessary to make four-point probe measurements on rectangular bar-shaped samples can be obtained. If the four-point probe measurement is valid, it should compare with a two-point probe measurement to within the accuracy limits set by the geometrical tolerances, as discussed in Section 4. By making such a comparison, the range of validity of a four-point probe measurement can be established for a particular semiconductor and the effect of such factors as surface treatments and probe pressures can be determined.

This work has been supported by the Advanced Research Projects Agency under order No. 373-62.

TABLE I

Correction Factor F_2 for a Sample with Plated Ends

Width	Height	Overall Length	Probe Spacing	Delta	F_2
0.100	0.100	0.500	0.0625	0.0	2.8703
0.100	0.100	0.500	0.0625	0.0001	2.8703
0.100	0.100	0.500	0.0625	0.001	2.8706
0.100	0.100	0.500	0.0625	0.01	2.9050
0.100	0.100	0.500	0.0625	0.02	3.0085
0.100	0.100	0.500	0.0625	0.05	3.4163
0.100	0.100	0.400	0.0625	0.	2.8699
0.100	0.100	0.300	0.0625	0.	2.8614
0.100	0.100	0.200	0.0625	0.	2.6181
0.10001	0.100	0.500	0.0625	0.	2.8700
0.1001	0.100	0.500	0.0625	0.	2.8677
0.100	0.10001	0.500	0.0625	0.	2.8701
0.100	0.1001	0.500	0.0625	0.	2.8685

TABLE II

Correction Factor F_1 for a Sample with Unplated Ends

Width	Height	Overall Length	Probe Spacing	Delta	F_1
0.100	0.100	0.500	0.0625	0.0	2.8703
0.100	0.100	0.500	0.0625	0.0001	2.8703
0.100	0.100	0.500	0.0625	0.001	2.8706
0.100	0.100	0.500	0.0625	0.01	2.9050
0.100	0.100	0.500	0.0625	0.02	3.0085
0.100	0.100	0.500	0.0625	0.05	3.4163
0.100	0.100	0.400	0.0625	0.	2.8707
0.100	0.100	0.300	0.0625	0.	2.8791
0.100	0.100	0.200	0.0625	0.	3.1217
0.10001	0.100	0.500	0.0625	0.	2.8700
0.1001	0.100	0.500	0.0625	0.	2.8677
0.100	0.10001	0.500	0.0625	0.	2.8701
0.100	0.1001	0.500	0.0625	0.	2.8686

APPENDIX I

Fortran Program for Calculation of Γ_2, the Four-Point Probe Correction Factor When the Bar Ends are Plated.

A. Format of Data Cards

First Card: Variable	Ends in Column	Example	Meaning of Variable
NDATA	3	5	The number of data cards that follow.

Second Card: Variable	Ends in Column	Example	Meaning of Variable
W	10	0.100	the sample width
H	20	0.101	the sample height
EL	30	0.500	the overall sample length
S	40	0.0625	the probe spacing
DELTA	50	0.001	the sidewise probe spacing
ACC	60	0.0001	the desired computation accuracy

The third and subsequent cards have the same format as the second card.

B. Example of Data Printout

Parts 1 and 2 below will be printed side by side in the printout. SERIES A ACCURACY and SERIES B ACCURACY refer to the accuracy actually achieved by the program in the computation of these two series. SERIES A TERMS and SERIES B TERMS show how many terms were actually calculated by the program for each series.

1.

WIDTH	HEIGHT	LENGTH	PROBE SPACING	DELTA
0.10000	0.10000	0.50000	0.06250	0.
0.10000	0.10000	0.50000	0.06250	0.01000
0.10000	0.10000	0.50000	0.06250	0.00100
0.10000	0.10000	0.50000	0.06250	0.00010
0.10000	0.10000	0.50000	0.06250	0.00001

2.

CORRECTION FACTOR	SERIES A ACCURACY	SERIES B ACCURACY	SERIES A TERMS	SERIES B TERMS
2.87025926	0.00010	0.00010	17	0
2.90499508	0.00010	0.00010	17	17
2.87060627	0.00010	0.00010	17	17
2.87026271	0.00010	0.00010	17	17
2.87025928	0.00010	0.00010	17	17

C. Program

```
      FUNCTION BETA(M,N)
      COMMON W,H,EL,S,ACC,ACCA,AO,ACCB,AOO,MA,MB
      EM=M
      EN=N
      BETA=(6.2831853/W)*SQRTF(EM**2+(EN*W/(2.*H))**2)
      RETURN
      END


      FUNCTION GAMMA(M,N)
      COMMON W,H,EL,S,ACC,ACCA,AO,ACCB,AOO,MA,MB
      EM=M
      EN=N
      GAMMA=(3.14159265/W)*SQRTF(EM**2+(EN*W/H)**2)
      RETURN
      END


      FUNCTION TERMA(M,N)
      COMMON W,H,EL,S,ACC,ACCA,AO,ACCB,AOO,MA,MB
      IF (M+N-1) 16,18,20
      TERMA=0.0
      RETURN
      DEN=2.
      GO TO 21
      DEN=1.
      AA=S/2.
      AB=EL/2.
      AC=AB-3.*AA
      Q=BETA(M,N)
      IF (Q*AB-75.) 26,26,34
      SH=EXPF(Q*AA)
      SHA=0.5*(SH-1./SH)
      SH=EXPF(Q*AB)
      SHB=0.5*(SH-1./SH)
```

```
30      SH=EXPF(Q*AC)
31      SHC=0.5*(SH-1./SH)
32      TERMA=SHC*SHA/(DEN*Q*SHB)
33      RETURN
34      IF (Q*S-75.) 37,35,35
35      TERMA=0.0
36      RETURN
37      IF (Q*(2.*AB-S)-75.) 38,42,42
38      SH=EXPF(-Q*S)
39      SHA=SH*(1.-SH)
40      TERMA=(SHA+EXPF(-Q*(2.*AB-S))-EXPF(-Q*2.*(AB-S)))/(2.*Q*DEN)
41      RETURN
42      SH=EXPF(-Q*S)
43      TERMA=(SH*(1.-SH))/(2.*Q*DEN)
44      RETURN
        END


45      FUNCTION TERMB(M,N)
46      COMMON W,H,EL,S,ACC,ACCA,AO,ACCB,ADO,MA,MB
47      IF(N-1) 48,50,50
48      DEN=2.
49      GO TO 51
50      DEN=1.
51      AA=S/2.
52      AB=EL/2.
53      AC=AB-3.*AA
54      Q=GAMMA(M,N)
55      IF (Q*AB-75.) 56,56,64
56      SH=EXPF(Q*AA)
57      SHA=0.5*(SH-1./SH)
58      SH=EXPF(Q*AB)
59      SHB=0.5*(SH-1./SH)
60      SH=EXPF(Q*AC)
61      SHC=0.5*(SH-1./SH)
62      TERMB=SHC*SHA/(DEN*Q*SHB)
63      RETURN
64      IF (Q*S-75.) 67,65,65
65      TERMB=0.0
66      RETURN
67      IF (Q*(2.*AB-S)-75.) 68,72,72
68      SH=EXPF(-Q*S)
69      SHA=SH*(1.-SH)
70      TERMB=(SHA+EXPF(-Q*(2.*AB-S))-EXPF(-Q*2.*(AB-S)))/(2.*Q*DEN)
71      RETURN
72      SH=EXPF(-Q*S)
73      TERMB=(SH*(1.-SH))/(2.*Q*DEN)
74      RETURN
        END
```

```
      SUBROUTINE SRIESA
      COMMON W,H,EL,S,ACC,ACCA,AO,ACCB,AOO,MA,MB
      P=3.14159265
      EM=(W/(2.*P*S))*LOGF(8./ACC)
      IF (2.*H/W-1.) 80,80,82
      N=EM+1.
      GO TO 83
      N=(2.*H/W)*EM+1.
      IF (N-17) 84,91,86
      N=17
      GO TO 91
      IF (330-N) 87,91,91
      N=330
      EN=N
      ACCA=8.*EXPF(-2.*P*S*EN/W)
      GO TO 92
      ACCA=ACC
      SUM=0.0
      DO 98 I=1,N
      II=I-1
      DO 97 J=1,N
      JJ=J-1
      SUM=SUM+TERMA(II,JJ)
      CONTINUE
      AO=(8./(W*H))*SUM
      MA=N
      RETURN
      END


      SUBROUTINE SRIESB(DELTA)
      COMMON W,H,EL,S,ACC,ACCA,AO,ACCB,AOO,MA,MB
      IF (DELTA) 109,105,109
      ACCB=ACC
      MB=0
      AOO=0.0
      RETURN
      P=3.14159265
      EM=(W/(P*S))*LOGF(32./ACC)
      IF (H/W-1.) 112,112,114
      N=EM+1.
      GO TO 115
      N=(H/W)*EM+1.
      IF (N-17) 116,123,118
      N=17
      GO TO 123
      IF (330-N) 119,123,123
      N=330
```

```
120    EN=N
121    ACCB=32.*EXPF(-P*S*EN/W)
122    GO TO 124
123    ACCB=ACC
124    SUM=0.0
125    ARG=P*DELTA/W
126    SIGN=-1.0
127    DO 134 I=1,N
128    SIGN=-SIGN
129    AI=I
130    T=SIGN*(SINF(AI*ARG))**2
131    DO 133 J=1,N
132    JJ=J-1
133    SUM=SUM+T*TERMB(I,JJ)
134    CONTINUE
135    AOO=(8./(W*H))*SUM
136    MB=N
137    RETURN
       END
```

```
138    COMMON W,H,EL,S,ACC,ACCA,AO,ACCB,AOO,MA,MB
139    PRINT 140
140   0FORMAT (1H1,33X5HPROBE21X10HCORRECTION6X8HSERIES A4X8HSERIES B2X8H
141   1SERIES A2X8HSERIES B/1H ,4X5HWIDTH4X6HHEIGHT4X6HLENGTH3X7HSPACING5
142   2X5HDELTA12X6HFACTOR8X8HACCURACY4X8HACCURACY4X5HTERMS5X5HTERMS/1H )
143    READ 144,NDATA
144    FORMAT (I3)
145    DO 153 I=1,NDATA
146    READ 147,W,H,EL,S,DELTA,ACC
147    FORMAT (6F10.0)
148    CALL SRIESA
149    CALL SRIESB(DELTA)
150    F=6.2831853*S*(S/(W*H)+AO+AOO)
151    PRINT 152,W,H,EL,S,DELTA,F,ACCA,ACCB,MA,MB
152    FORMAT (1H ,5F10.5,F20.8,2F12.5,2I10)
153    CONTINUE
       CALL SYSTEM
       END
```

APPENDIX II

Fortran Program for Calculation of F_1, the Four-Point Probe Correction Factor When the Bar Ends are Unplated.

A. Format of Data Cards

The format for the data cards is identical with that given in Appendix I.

B. Example of Data Printout

Parts 1 and 2 below will be printed side by side in the printout. SERIES A ACCURACY and SERIES B ACCURACY refer to the accuracy actually achieved by the program in the computation of these two series. SERIES A TERMS and SERIES B TERMS show how many terms were actually calculated by the program for each series.

1.

WIDTH	HEIGHT	LENGTH	PROBE SPACING	DELTA
0.10000	0.10000	0.50000	0.06250	0.
0.10000	0.10000	0.50000	0.06250	0.01000
0.10000	0.10000	0.50000	0.06250	0.00100
0.10000	0.10000	0.50000	0.06250	0.00010
0.10000	0.10000	0.50000	0.06250	0.00001

2.

CORRECTION FACTOR	SERIES A ACCURACY	SERIES B ACCURACY	SERIES A TERMS	SERIES B TERMS
2.87029204	0.00010	0.00010	17	0
2.90503103	0.00010	0.00010	17	17
2.87063912	0.00010	0.00010	17	17
2.87029549	0.00010	0.00010	17	17
2.87029207	0.00010	0.00010	17	17

C. Program

```
      FUNCTION BETA(M,N)
      COMMON W,H,EL,S,ACC,ACCA,AO,ACCB,ACC,MA,MB
      EM=M
      EN=N
      BETA=(6.2831853/W)*SQRTF(EM**2+(EN*W/(2.*H))**2)
      RETURN
      END
```

```
      FUNCTION GAMMA(M,N)
      COMMON W,H,EL,S,ACC,ACCA,AO,ACCB,ACO,MA,MB
      EM=M
      EN=N
      GAMMA=(3.14159265/W)*SQRTF(EM**2+(EN*W/H)**2)
      RETURN
      END


      FUNCTION TERMA(M,N)
      COMMON W,H,EL,S,ACC,ACCA,AO,ACCB,ACO,MA,MB
      IF (M+N-1) 16,18,20
      TERMA=0.0
      RETURN
      DEN=2.
      GO TO 21
      DEN=1.
      AA=S/2.
      AB=EL/2.
      AC=AB-3.*AA
      Q=BETA(M,N)
      IF (Q*AB-75.) 26,26,34
      SH=EXPF(Q*AA)
      SHA=0.5*(SH-1./SH)
      SH=EXPF(Q*AB)
      SHB=0.5*(SH+1./SH)
      SH=EXPF(Q*AC)
      SHC=0.5*(SH+1./SH)
      TERMA=SHC*SHA/(DEN*Q*SHB)
      RETURN
      IF (Q*S-75.) 37,35,35
      TERMA=0.0
      RETURN
      IF (Q*(2.*AB-S)-75.) 38,42,42
      SH=EXPF(-Q*S)
      SHA=SH*(1.+SH)
      TERMA=(SHA+EXPF(-Q*(2.*AB-S))+EXPF(-Q*2.*(AB-S)))/(2.*Q*DEN)
      RETURN
      SH=EXPF(-Q*S)
      TERMA=(SH*(1.+SH))/(2.*Q*DEN)
      RETURN
      END


      FUNCTION TERMB(M,N)
      COMMON W,H,EL,S,ACC,ACCA,AO,ACCB,ACO,MA,MB
      IF(N-1) 48,50,50
      DEN=2.
      GO TO 51
      DEN=1.
```

```
      AA=S/2.
      AB=EL/2.
      AC=AB-3.*AA
      Q=GAMMA(M,N)
      IF (Q*AB-75.) 56,56,64
      SH=EXPF(Q*AA)
      SHA=0.5*(SH-1./SH)
      SH=EXPF(Q*AB)
      SHB=0.5*(SH+1./SH)
      SH=EXPF(Q*AC)
      SHC=0.5*(SH+1./SH)
      TERMB=SHC*SHA/(DEN*Q*SHB)
      RETURN
      IF (Q*S-75.) 67,65,65
      TERMB=0.0
      RETURN
      IF (Q*(2.*AB-S)-75.) 68,72,72
      SH=EXPF(-Q*S)
      SHA=SH*(1.+SH)
      TERMB=(SHA+EXPF(-Q*(2.*AB-S))+EXPF(-Q*2.*(AB-S)))/(2.*Q*DEN)
      RETURN
      SH=EXPF(-Q*S)
      TERMB=(SH*(1.+SH))/(2.*Q*DEN)
      RETURN
      END


      SUBROUTINE SRIESA
      COMMON W,H,FL,S,ACC,ACCA,AO,ACCB,ACO,MA,MB
      P=3.14159265
      EM=(W/(2.*P*S))*LOGF(8./ACC)
      IF (2.*H/W-1.) 80,80,82
      N=EM+1.
      GO TO 83
      N=(2.*H/W)*EM+1.
      IF (N-17) 84,91,86
      N=17
      GO TO 91
      IF (330-N) 87,91,91
      N=330
      EN=N
      ACCA=8.*EXPF(-2.*P*S*EN/W)
      GO TO 92
      ACCA=ACC
      SUM=0.0
      DO 98 I=1,N
      II=I-1
      DO 97 J=1,N
      JJ=J-1
      SUM=SUM+TERMA(II,JJ)
      CONTINUE
```

```
99      AO=(8./(W*H))*SUM
100     MA=N
101     RETURN
        END
```

```
102     SUBROUTINE SRIESB(DELTA)
103     COMMON W,H,EL,S,ACC,ACCA,AO,ACCB,AOO,MA,MB
104     IF (DELTA) 109,105,109
105     ACCB=ACC
106     MB=0
107     AOO=0.0
108     RETURN
109     P=3.14159265
110     EM=(W/(P*S))*LOGF(32./ACC)
111     IF (H/W-1.) 112,112,114
112     N=EM+1.
113     GO TO 115
114     N=(H/W)*EM+1.
115     IF (N-17) 116,123,118
116     N=17
117     GO TO 123
118     IF (330-N) 119,123,123
119     N=330
120     EN=N
121     ACCB=32.*EXPF(-P*S*EN/W)
122     GO TO 124
123     ACCB=ACC
124     SUM=0.0
125     ARG=P*DELTA/W
126     SIGN=-1.0
127     DO 134 I=1,N
128     SIGN=-SIGN
129     AI=I
130     T=SIGN*(SINF(AI*ARG))**2
131     DO 133 J=1,N
132     JJ=J-1
133     SUM=SUM+T*TERMB(I,JJ)
134     CONTINUE
135     AOO=(8./(W*H))*SUM
136     MB=N
137     RETURN
        END
```

```
138    COMMON W,H,EL,S,ACC,ACCA,AO,ACCB,AOO,MA,MB
139    PRINT 140
140   0FORMAT (1H1,33X5HPROBE21X10HCORRECTION6X8HSERIES A4X8HSERIES B2X8H
141   1SERIES A2X8HSERIES B/1H ,4X5HWIDTH4X6HHEIGHT4X6HLENGTH3X7HSPACING5
142   2X5HDELTA12X6HFACTOR8X8HACCURACY4X8HACCURACY4X5HTERMS5X5HTERMS/1H )
143    READ 144,NDATA
144    FORMAT (I3)
145    DO 153 I=1,NDATA
146    READ 147,W,H,EL,S,DELTA,ACC
147    FORMAT (6F10.0)
148    CALL SRIESA
149    CALL SRIESB(DELTA)
150    F=6.2831853*S*(S/(W*H)+AO+AOO)
151    PRINT 152,W,H,EL,S,DELTA,F,ACCA,ACCB,MA,MB
152    FORMAT (1H ,5F10.5,F20.8,2F12.5,2I10)
153    CONTINUE
       CALL SYSTEM
       END
```

APPENDIX III

Fortran Program for the Calculation of δ.

A. Format of Data Cards

First Card:	Variable	Ends in Column	Example	Meaning of Variable
	NDATA	3	2	The number of data cards that follow

Second Card:	Variable	Ends in Column	Example	Meaning of Variable
	W	10	0.100	the sample width
	H	20	0.100	the sample height
	EL	30	0.500	the overall sample length
	S	40	0.050	the probe spacing
	D	50	0.005	the position of the probe (as shown in Figure 3)

The third and subsequent cards have the same format as the second card.

B. Example of Data Printout

In the printout AO is the desired value for δ.

```
W=0.10000H=0.10000L=0.50000S=0.06250D=0.      AO= -0.00516503
W=0.10000H=0.10000L=0.50000S=0.06250D=0.05000AO= -0.00404882
W=0.10000H=0.10000L=0.50000S=0.06250D=0.10000AO= -0.01410008
W=0.10000H=0.10000L=0.50000S=0.06250D=0.15000AO= -0.05766200
W=0.10000H=0.10000L=0.50000S=0.06250D=0.20000AO= -0.18221583
```

C. Program

```
      FUNCTION GAMMA(M,N)
      COMMON W,H,EL,S,D,PI,AO
      EM=M
      EN=N
      GAMMA=(PI/W)*SQRTF(EM**2+(EN*W/H)**2)
      RETURN
      END
```

```
      FUNCTION TERM(M,N)
      COMMON W,H,EL,S,D,PI,AO
      DENOM=1.
      IF (M+N-1) 1,2,3
1     TERM=0.0
      RETURN
2     DENOM=2.
3     Q=GAMMA(M,N)
      A=Q*D
      B=Q*(D-S)
      C=Q*EL/2.
      IF (C-75.) 4,4,5
4     A=EXPF(A)
      A=0.5*(A-1./A)
      B=EXPF(B)
      B=0.5*(B-1./B)
      C=EXPF(C)
      C=0.5*(C+1./C)
      TERM=(A-B)/(Q*DENOM*C)
      RETURN
5     IF (C-75.) 6,6,7
6     AA=EXPF(C-B)
      BB=EXPF(C-A)
      TERM=(1./BB-1./AA)/(Q*DENOM)
      RETURN
7     IF (C-A-75.) 8,8,9
8     AA=EXPF(C-A)
      TERM=1./(AA*Q*DENOM)
      RETURN
9     TERM=0.0
      RETURN
      END


      COMMON W,H,EL,S,D,PI,AO
      PI=3.14159265
      READ 1,NDATA
1     FORMAT (I3)
      DO 2 I=1,NDATA
      READ 3,W,H,EL,S,D
3     FORMAT (5F10.0)
      CALL SUM
      PRINT 4,W,H,EL,S,D,AO
4     FORMAT (1H ,2HW=F10.5,2HH=F10.5,2HL=F10.5,2HS=F10.5,2HD=F10.5,
     13HAO=F12.8 )
2     CONTINUE
      CALL SYSTEM
      END
```

```
      SUBROUTINE SUM
      COMMON W,H,EL,S,D,PI,AO
      SIGNA=-1.
      AO=0.0
      K=0
      I=-1
6     I=I+1
      SIGNA=-SIGNA
      SIGNB=-1.
      A=0.
      J=-1
4     J=J+1
      SIGNB=-SIGNB
      B=(SIGNA)*(SIGNB)*(4.0/S)*TERM(I,J)
      A=A+B
      K=K+1
      IF (J-5) 4,4,10
10    IF (K-10000) 1,2,2
1     IF (ABSF(B)-1.0E-8) 3,3,4
3     AO=AO+A
      IF (ABSF(A)-1.0E-5) 5,5,6
5     RETURN
2     AO=1.
      RETURN
      END
```


☆ U. S. GOVERNMENT PRINTING OFFICE : 1964 O - 732-560

DEPARTMENT OF COMMERCE
NATIONAL BUREAU OF STANDARDS