REFERENCE

UNITED STATES
DEPARTMENT OF
COMMERCE
PUBLICATION

NBS TECHNICAL NOTE 716

The Ideal Lovibond Color System for CIE Standard Illuminants A and C Shown in Three Colorimetric Systems

U.S.
DEPARTMENT
OF
COMMERCE
National
Bureau

QC
100
U5753
no. 716
1972

AUTHENTICATED
U.S. GOVERNMENT
INFORMATION
GPO

NATIONAL BUREAU OF STANDARDS

The National Bureau of Standards[1] was established by an act of Congress March 3, 1901. The Bureau's overall goal is to strengthen and advance the Nation's science and technology and facilitate their effective application for public benefit. To this end, the Bureau conducts research and provides: (1) a basis for the Nation's physical measurement system, (2) scientific and technological services for industry and government, (3) a technical basis for equity in trade, and (4) technical services to promote public safety. The Bureau consists of the Institute for Basic Standards, the Institute for Materials Research, the Institute for Applied Technology, the Center for Computer Sciences and Technology, and the Office for Information Programs.

THE INSTITUTE FOR BASIC STANDARDS provides the central basis within the United States of a complete and consistent system of physical measurement; coordinates that system with measurement systems of other nations; and furnishes essential services leading to accurate and uniform physical measurements throughout the Nation's scientific community, industry, and commerce. The Institute consists of a Center for Radiation Research, an Office of Measurement Services and the following divisions:

Applied Mathematics—Electricity—Heat—Mechanics—Optical Physics—Linac Radiation[2]—Nuclear Radiation[2]—Applied Radiation[2]—Quantum Electronics[3]—Electromagnetics[3]—Time and Frequency[3]—Laboratory Astrophysics[3]—Cryogenics[3].

THE INSTITUTE FOR MATERIALS RESEARCH conducts materials research leading to improved methods of measurement, standards, and data on the properties of well-characterized materials needed by industry, commerce, educational institutions, and Government; provides advisory and research services to other Government agencies; and develops, produces, and distributes standard reference materials. The Institute consists of the Office of Standard Reference Materials and the following divisions:

Analytical Chemistry—Polymers—Metallurgy—Inorganic Materials—Reactor Radiation—Physical Chemistry.

THE INSTITUTE FOR APPLIED TECHNOLOGY provides technical services to promote the use of available technology and to facilitate technological innovation in industry and Government; cooperates with public and private organizations leading to the development of technological standards (including mandatory safety standards), codes and methods of test; and provides technical advice and services to Government agencies upon request. The Institute also monitors NBS engineering standards activities and provides liaison between NBS and national and international engineering standards bodies. The Institute consists of the following divisions and offices:

Engineering Standards Services—Weights and Measures—Invention and Innovation—Product Evaluation Technology—Building Research—Electronic Technology—Technical Analysis—Measurement Engineering—Office of Fire Programs.

THE CENTER FOR COMPUTER SCIENCES AND TECHNOLOGY conducts research and provides technical services designed to aid Government agencies in improving cost effectiveness in the conduct of their programs through the selection, acquisition, and effective utilization of automatic data processing equipment; and serves as the principal focus within the executive branch for the development of Federal standards for automatic data processing equipment, techniques, and computer languages. The Center consists of the following offices and divisions:

Information Processing Standards—Computer Information—Computer Services—Systems Development—Information Processing Technology.

THE OFFICE FOR INFORMATION PROGRAMS promotes optimum dissemination and accessibility of scientific information generated within NBS and other agencies of the Federal Government; promotes the development of the National Standard Reference Data System and a system of information analysis centers dealing with the broader aspects of the National Measurement System; provides appropriate services to ensure that the NBS staff has optimum accessibility to the scientific information of the world, and directs the public information activities of the Bureau. The Office consists of the following organizational units:

Office of Standard Reference Data—Office of Technical Information and Publications—Library—Office of International Relations.

---

[1] Headquarters and Laboratories at Gaithersburg, Maryland, unless otherwise noted; mailing address Washington, D.C. 20234.
[2] Part of the Center for Radiation Research.
[3] Located at Boulder, Colorado 80302.

NATIONAL BUREAU OF STANDARDS
MAY 16 1972
QC100
U5753
no. 716
1972

The Ideal Lovibond Color System for CIE Standard Illuminants A and C Shown in Three Colorimetric Systems

Geraldine W. Haupt, John C. Schleter, and
Kenneth L. Eckerle

Heat Division
Institute for Basic Standards
National Bureau of Standards
Washington, D.C. 20234

U.S. DEPARTMENT OF COMMERCE, Peter G. Peterson, Secretary
U.S. NATIONAL BUREAU OF STANDARDS, Lewis M. Branscomb, *Director*,

Issued April 1972 t Technical note no. 716

National Bureau of Standards Technical Note 716

Nat. Bur. Stand. (U.S.), Tech. Note 716, 115 pages (Apr. 1972)

CODEN: NBTNAE

Issued April 1972

For sale by the Superintendent of Documents, U.S. Government Printing Office
Washintgon, D.C. 20402 (Order by SD Catalog No. C 13.46:716). Price $1.00.

The Ideal Lovibond Color System for CIE Standard Illuminants A and C Shown in Three Colorimetric Systems

Geraldine W. Haupt, John C. Schleter, and Kenneth L. Eckerle

Tables are given which list luminous internal transmittances, luminous transmittances, and chromaticity coordinates of the ideal Lovibond color system for CIE standard illuminants A and C according to (1) the CIE 1931 (x,y)-system, (2) the CIE 1960 uniform-chromaticity-scale (UCS) (u,v)-system, and (3) the CIE 1964 (U*, V*, W*,)-system. Chromaticity diagrams for the (x,y)- and (u,v)-systems are shown together with horizontal and vertical cross-sections of the (U*, V*, W*)-color solid for the entire ideal Lovibond color system produced by single-color units and two-color combinations of units for each illuminant. In addition, chromaticity diagrams and cross-sections are shown indicating the single-color units of red, yellow, and blue for each CIE system and illuminant.

Key words: Chromaticity, Lovibond; CIE and Lovibond; color, Lovibond; colorimetry, Lovibond; glass color standards; Lovibond and CIE.

Lovibond glasses were introduced into this country from England at the turn of the century for the purpose of grading vegetable- and cottonseed-oils, i.e., of determining their quality and salability. These glasses together with the Lovibond Tintometer were developed in 1887 by Joseph W. Lovibond. Sets of Lovibond glasses were first made available as color standards sometime after 1896 when the company, The Tintometer Ltd., was organized. This Lovibond color system consists of three scales, each represented by a series of glasses; a red, a yellow and a blue. The scales have been calibrated in arbitrary units, but the three units are related in such a way that for daylight illumination a combination of the same number of units of each of the red, yellow, and blue glasses results in an approximately neutral filter. Each glass in the series is identified by the number of unit glasses to which it is equivalent.

In the 1920's, the NBS undertook the standardization of one set of Lovibond glasses at the request of those interested in the use of similar glasses in the vegetable- and cottonseed-oil trade. The need or desire for an ideal scale had arisen long before 1927 when the first NBS paper on the Lovibond Color System was published [1][1]. This paper included, along with tables and graphs showing the fundamental spectrophotometric data for some of the glasses of NBS set BS9940 (purchased in 1912), a prefatory statement by Irwin G. Priest, first Chief of the

---

[1]Figures in brackets indicate the literature references at on page 11.

Colorimetry and Spectrophotometry Section of the National Bureau of Standards. It was here that Priest first alluded to the ideal scale by stating as one of the objectives of that standardization: "2. To specify in reproducible colorimetric terms a standard Lovibond scale which shall represent the present actual colors (BS9940) as closely as possible, subject to the condition that the irregularities or erratic variations (which are obviously departures from what might be called an ideal scale) are eliminated". These obvious departures may be seen in figures 1 and 2 of the paper published in 1947 [2]. These Lovibond "network" graphs were prepared to supply additional colorimetric data about the set BS9940.

In 1962, the ideal units for the red (R), yellow (Y), and blue (B) glasses of the Lovibond Color System were defined in the paper by Judd, Chamberlin, and Haupt, "The Ideal Lovibond System" [3]. Table I of the 1962 paper gives the spectral internal transmittances of each of the unit glasses defining the ideal Lovibond Color System. These transmittances are based on fundamental spectrophotometric data determined for 20 glasses of each series (1, 2, 3, ..., 20). Some of the data were obtained at the NBS for the glasses of set BS9940 and others were obtained by the Tintometer, Ltd., for glasses retained by them as standards.

The method of computation of the chromaticities of the colors of the ideal Lovibond system has been published [3] and need not be described here. The values of chromaticity have been specified in the standard colorimetric coordinate system recommended by the International Commission on Illumination (CIE) in 1931. The values of luminous

internal transmittance and chromaticity coordinates for CIE standard illuminant A are listed in Table 2 [3] for single-color and two-color combinations of ideal Lovibond glasses.

The present publication presents tables and graphs of the ideal Lovibond color system, for both CIE standard illuminants A and C. The tables give the luminous internal transmittances, luminous transmittances and chromaticity coordinates for the single-color and various two-color combinations of units. The chromaticity coordinates are given in terms of the three coordinate systems recommended by the CIE: (1) the basic (x,y)-system [4] recommended in 1931, (2) the (u,v)-system proposed by MacAdam [5] as an approximation to uniform spacing, recommended in 1960 [6], and (3) the (U*, V*, W*)-system proposed by Wyszecki [7] to show the interdependence of lightness index (W*) and chromaticness indexes (U*, V*), recommended in 1964 [8].

In the CIE 1960 uniform chromaticity scale (UCS) system, the terms (u,v) are defined as follows:

$$u = \frac{4x}{-2x + 12y + 3} \qquad v = \frac{6y}{-2x + 12y + 3} \tag{1}$$

where x,y are the chromaticity coordinates defined according to the CIE 1931 system.

In the CIE 1964 system, the terms (W*,U*,V*) are defined as follows:

$$\begin{aligned} W^* &= 25Y^{1/3} - 17 \quad (1 \leq Y \leq 100), \\ U^* &= 13W^*(u - u_o), \\ V^* &= 13W^*(v - v_o), \end{aligned} \tag{2}$$

where Y is the luminous transmittance, u and v are defined by equation

(1), and (u_o,v_o) are the values of the variables u,v for the achromatic point. The CIE 1964 system is based upon object colors, i.e. reflecting materials, where the term "lightness" index strictly applies. This system was verified using data obtained by means of observations of color differences in terms of Munsell object colors. When one attempts to apply the CIE 1964 system to the use of Lovibond glasses, additional restrictions must be made. These restrictions are: (1) the observer must be adapted to the illuminant of the achromatic point (u_o,v_o); (2) the angular subtense of the field of view must be sufficiently large that the viewed area appears as a luminous surface; and (3) the luminance of the source, viewed through the transmitting materials, must be constant for a given set of determinations. If any of the above restrictions are not met, the use of the CIE 1964 system is not valid. However, in usual practice with Lovibond glasses, the criteria can be met and the use of the CIE 1964 system is valid. It must be remembered then that additional restrictions are needed in the general case of the application of the CIE 1964 system to transmitting materials.

When the data were prepared by means of a high-speed computer for the 1962 paper [3], the results of the calculations were determined to 9 decimals for the tristimulus values (X,Y,Z) and 5 decimals for the chromaticity coordinates (x,y,z). The calculations were performed for both CIE standard illuminants A and C, using the CIE 1931 observed (2°), but the results of the calculation for CIE standard illuminant C were never published. The resulting computer output, however, was stored on computer punched-cards and these cards were retained at the NBS.

These punched-cards were used for input to a high-speed digital computer currently in use at the NBS which was programmed to perform the conversion of internal luminous transmittance to luminous transmittance and the chromaticity data into terms of the CIE 1960 UCS system and the CIE 1964 system. The conversion of the internal luminous transmittance to luminous transmittance was made in accord with the method given in the 1962 paper, maintaining 8 significant places in the computer. A like number of significant places was maintained in the computer for the conversion of the chromaticity data.

In tables 1 and 2 of this Technical Note, are listed the results of these conversions for CIE standard illuminants A and C respectively.

Tables 1 and 2 are reproduced directly from the computer output and, therefore, the column headings are of necessity limited to the upper case font available on the printer. The column headings in the tables have the following significance: "R", "Y", "B", the number of unit Lovibond red, yellow and blue glasses respectively; "T(IN)", the internal luminous transmittance; "T", the luminous transmittance (reduced by reflection losses)[2]; "1931 XY", CIE 1931 system chromaticity coordinates (x,y); "1960 UV", CIE 1960 system chromaticity coordinates (u,v); and "1964 W*U*V*", the CIE 1964 system lightness index and chromaticness indexes respectively. The data of internal luminous transmittance

---

[2]The notation "T" for luminous transmittance is used in this Technical Note, rather than the usual notation "Y", in order to avoid confusion with the notation indicating the number of unit Lovibond yellow glasses in the various combinations.

(T(IN)) and luminous transmittance (T) are given to 4 significant places (T > 1%) or 4 decimals (T < 1%); the chromaticity coordinates for both the CIE 1931 and 1960 systems are given to 4 decimals; and the lightness and chromaticness indexes of the CIE 1964 system are given to 2 decimals. Since the computer maintains 8 significant places for all computations, it is not possible to compute exactly the results shown in the last five columns of tables 1 and 2 from the data given in columns headed "T", "X", and "Y". It will be noted, in tables 1 and 2 that the CIE 1964 system chromaticness indexes (U*,V*), are not given when the values of luminous transmittance, T, are less than 1% since by definition the range of T is between 1% and 100%.

At the same time that the data were generated to produce tables 1 and 2, the data of R, Y, B, x, y, u, v, W*, U*, and V*, were punched into computer cards. These cards were used as input to be processed by the computer to produce a magnetic tape to control the functions of a digital-incremental plotter. The diagrams for both CIE standard illuminants A and C for the three CIE systems are shown in figures 1 through 20; for CIE standard illuminant A in figures 1 through 10 and for CIE standard illuminant C in figures 11 through 20. The odd-numbered figures show the coordinate positions, in the particular CIE system, of the indicated units of ideal Lovibond red (R), yellow (Y), and blue (B) on each of the single-color scales. The even-numbered figures show, for the particular CIE system, the entire Lovibond color system or "network", with the exceptions described below, of the single-color and two-color combinations of ideal Lovibond glasses. The achromatic point is represented in all of the figures by the solid dot. By studying the

figures showing the entire network, with the aid of the corresponding figure showing the single-color scale, one can deduce the number of ideal Lovibond units indicated for the two-color combinations shown for each CIE system.

Figures 1, 2, 11, and 12 show the data plotted on an (x,y)-chromaticity diagram in accord with the CIE 1931 system. Figures 3, 4, 13, and 14 show the data in terms of the CIE 1960 UCS system on a (u,v)-chromaticity diagram. The data are plotted in terms of the chromaticness indexes (U*,V*), of the CIE 1964 system in figures 5, 6, 15, and 16. The remaining eight figures show the data, in terms of the CIE 1964 system, plotted on the (U*,W*)- and (V*,W*)- cross sections of the (U*,V*,W*)-color solid (figures 7, 8, 17, and 18 and figures 9, 10, 19, and 20 respectively). A perspective view for a given illuminant, of the ideal Lovibond system in color space may be visualized if one considers the (U*,V*)-, (U*W*)-, and (V*,W*)-figures as forming the three intersecting orthogonal planes of the color solid (for example, figures 5, 7, 9; 6, 8, 10; 15, 17, 19; or 16, 18, 20).

In figures 2, 4, 12, and 14 all of the data listed in tables 1 and 2 are not shown because the chromaticity coordinates of the two-color combinations for the greatest number of Lovibond units (for example 100Y50B) "fold under" the network and tend to make the more useful portions of the diagrams confusing. Since the same chromaticitie can be obtained with fewer Lovibond units, it was felt that including the high-unit combinations would be of little interest. However, the characteristic "folding under" is an essential property of the CIE 1964 system, the lightness index being included in the chromaticness-indexes

(see equation 2). Therefore, all of the data which are listed in tables 1 and 2 for the U*V*W* system are shown in figures 6, 8, 10, 16, 18, and 20. The interdependence of the lightness and chromaticness-indexes is clearly shown in figures 7 through 10 and in 17 through 20.

In the chromaticness-index-lightness-index (U*,W*)-diagrams (figures 7, 8, 17, and 18), one may become oriented by starting at the apex (U* = 0, W* = 99), or achromatic point, tracing the unit red glasses in the direction of increasingly positive values of U* and the unit blue glasses in the direction of increasingly negative values of U* for both standard illuminants. The unit yellow glasses trace a slightly curved line near the W*-axis at U* = 0; for CIE standard illuminant A all of the U* values are positive except 100Y (U* = -4.77) and for CIE standard illuminant C all of the U* values are positive except 1Y, 2Y, 3Y, and 4Y which are negative (U* = -0.67, -0.80, -0.63, and -0.26 respectively). The extent of the Lovibond gamut indicated on the (U*,W*)-diagrams is slightly greater for CIE standard illuminant A than for C. The maximum value of the U* chromaticness-index is seen for CIE standard illuminant A, to occur at 28R (U* = 124.40) where the lightness-index W* is 48.25; similarly, for CIE standard illuminant C to occur at 32R (U* = 110.03) where W* is 37.63. The minimum value of the U* chromaticness-index occurs for CIE standard illuminant A, at 9B (U* = -43.16) where the lightness-index W* is 49.46. However, for CIE standard illuminant C, the minimum value of U* is achieved by a yellow-blue two-color combination 8Y10B (U* = -34.71) having a lightness-index W* of 44.38.

For the (V*,W*)-chromaticness-index-lightness-index diagrams (figures 9, 10, 19, and 20) again starting at the achromatic point

(V* = 0, W* = 99), one may trace the unit yellow glasses in the direction of increasingly positive values of V* and the unit blue glasses in the direction of increasingly negative values of V* for both CIE standard illuminants A and C. The unit red glasses trace an S-shaped curve, especially for CIE standard illuminant C, near the W*-axis at V* = 0. The maximum value of the V* chromaticness-index for both CIE standard illuminants A and C, is seen to occur at 30Y. However, the maximum values of V* and W* differ for the two illuminants; for CIE standard illuminant A (V* = 22.97, W* = 83.21) and for CIE standard illuminant C (V* = 69.35, W* = 81.74). The minimum values of the V* chromaticness-index are achieved by nearly the same units of Lovibond blue for both CIE standard illuminants A and C; namely 18B and 16B respectively. These minimum values occur at V* equals -47.85, W* equals 26.37 for CIE standard illuminant A and V* equals -77.25, W* equals 36.52 for CIE standard illuminant C.

The greater extent of the ideal Lovibond color system for CIE standard illuminant C as compared with CIE standard illuminant A, can readily be seen in the (U*, V*)-chromaticness-index diagrams (figures 5, 6, 15, and 16) which view the (U*,V*,W*) color solid from above. Thus, the ideal Lovibond color system may be seen to be more useful when used with CIE standard illuminant C rather than with CIE standard illuminant A because of the expanded gamut.

The figures showing the ideal Lovibond color system in terms of the CIE 1960- and CIE 1964-systems serve another purpose. Many readers may not be particularly familiar with these more recent transformations of the CIE 1931-system. By studying the data contained in the tables and

comparing the figures, one can gain a better appreciation of these transformations and a fuller understanding of the value of other sets of data presented in these newer terms.

REFERENCES

[1] K. S. Gibson, F. K. Harris, and I. G. Priest, The Lovibond Color System, I. A spectrophotometric analysis of the Lovibond glasses, Bur. Std. Sci. Paper 547, 22, (1927).

[2] Geraldine Walker Haupt and Florence Lesch Douglas, Chromaticities of Lovibond Glasses, J. Res. NBS, 39, 11 (1947); also J. Opt. Soc. Am. 37, 698 (1947).

[3] Deane B. Judd, G. J. Chamberlin, and Geraldine W. Haupt, The Ideal Lovibond Color System, J. Res. NBS, 66C, 121 (1962); also J. Opt. Soc. Am., 52, 813 (1962).

[4] Commission Internationale de l'Éclairage, Proceedings of the 8th Session, Cambridge 1931 (Cambridge University Press, London, 1932), p. 19.

[5] D. L. MacAdam, J. Opt. Soc. Am., 27, 296 (1937).

[6] Commission Internationale de l'Éclairage, Proceedings of the 14th Session, Brussels, 1959 (Bureau Central CIE, Paris, 1960), Vol. A, pp. 36, 107, 109.

[7] G. Wyszecki, J. Opt. Soc. Am., 53, 1318 (1963).

[8] Commission Internationale de l'Éclairage, Proceedings of the 15th Session, Vienna, 1964 (CIE Bureau Central 57, Paris 5, France), Vol. A, p.33.

TABLE 1.

(For explanation of headings, see text page 6.)

ILLUMINANT A

R	Y	B	T(IN)	T	1931 X	1931 Y	1960 U	1960 V	1964 W*	1964 U*	1964 V*
0	0	0	100.0	100.0	0.4476	0.4075	0.2559	0.3496	99.04	0.00	0.00
1	0	0	89.88	82.69	.4602	.3983	.2684	.3484	91.92	14.85	-1.36
2	0	0	81.29	74.78	.4724	.3901	.2805	.3474	88.33	28.19	-2.43
3	0	0	73.95	68.03	.4840	.3827	.2922	.3466	85.06	40.15	-3.25
4	0	0	67.65	62.24	.4950	.3761	.3036	.3459	82.07	50.83	-3.87
5	0	0	62.20	57.23	.5056	.3702	.3145	.3454	79.34	60.35	-4.31
6	0	0	57.47	52.87	.5156	.3650	.3248	.3450	76.83	68.81	-4.59
7	0	0	53.33	49.07	.5251	.3605	.3347	.3446	74.52	76.31	-4.75
8	0	0	49.69	45.72	.5341	.3564	.3441	.3444	72.39	82.95	-4.82
9	0	0	46.47	42.76	.5426	.3529	.3529	.3443	70.42	88.81	-4.79
10	0	0	43.61	40.12	.5507	.3498	.3613	.3443	68.58	93.98	-4.71
11	0	0	41.05	37.76	.5583	.3470	.3693	.3443	66.87	98.52	-4.58
12	0	0	38.74	35.64	.5655	.3446	.3767	.3444	65.28	102.50	-4.41
13	0	0	36.66	33.73	.5723	.3425	.3838	.3445	63.77	105.99	-4.21
14	0	0	34.77	31.99	.5787	.3406	.3904	.3446	62.36	109.03	-4.00
15	0	0	33.05	30.40	.5848	.3389	.3967	.3448	61.03	111.69	-3.77
16	0	0	31.47	28.95	.5906	.3373	.4027	.3450	59.76	113.99	-3.54
17	0	0	30.02	27.61	.5960	.3360	.4083	.3452	58.56	115.98	-3.32
18	0	0	28.68	26.38	.6012	.3347	.4136	.3454	57.42	117.69	-3.09
19	0	0	27.43	25.24	.6060	.3336	.4186	.3456	56.33	119.13	-2.87
20	0	0	26.28	24.18	.6107	.3325	.4234	.3458	55.29	120.37	-2.67
22	0	0	24.20	22.27	.6192	.3307	.4322	.3463	53.33	122.24	-2.28
24	0	0	22.38	20.59	.6268	.3290	.4403	.3467	51.52	123.46	-1.93
26	0	0	20.76	19.10	.6337	.3275	.4476	.3470	49.83	124.15	-1.64
28	0	0	19.32	17.78	.6398	.3262	.4543	.3473	48.25	124.40	-1.39
30	0	0	18.03	16.59	.6454	.3248	.4604	.3476	46.76	124.30	-1.19
32	0	0	16.86	15.51	.6504	.3236	.4661	.3478	45.35	123.90	-1.03
34	0	0	15.80	14.54	.6550	.3224	.4714	.3480	44.01	123.26	-.90
36	0	0	14.83	13.65	.6591	.3212	.4763	.3481	42.74	122.42	-.81
38	0	0	13.95	12.83	.6628	.3200	.4808	.3482	41.53	121.41	-.74
40	0	0	13.14	12.09	.6662	.3189	.4851	.3482	40.37	120.26	-.69
45	0	0	11.37	10.46	.6735	.3161	.4946	.3482	37.68	116.93	-.65
50	0	0	9.916	9.123	.6793	.3135	.5029	.3481	35.24	113.12	-.67
55	0	0	8.696	8.000	.6840	.3109	.5101	.3478	33.00	109.05	-.73
60	0	0	7.664	7.051	.6879	.3086	.5166	.3475	30.94	104.82	-.81
65	0	0	6.784	6.241	.6912	.3063	.5223	.3472	29.03	100.52	-.88
70	0	0	6.028	5.546	.6940	.3043	.5275	.3469	27.25	96.20	-.95
75	0	0	5.375	4.945	.6965	.3023	.5322	.3465	25.59	91.91	-1.01
80	0	0	4.808	4.423	.6986	.3005	.5365	.3462	24.04	87.67	-1.06
90	0	0	3.877	3.567	.7023	.2973	.5441	.3455	21.20	79.41	-1.12
100	0	0	3.157	2.904	.7053	.2945	.5507	.3449	18.67	71.52	-1.13

ILLUMINANT A

R	Y	B	T(IN)	T	1931 X	1931 Y	1960 U	1960 V	1964 W*	1964 U*	1964 V*
0	0	1	82.61	76.01	0.4301	0.4020	0.2470	0.3464	88.90	-10.28	-3.70
1	0	1	74.03	62.66	.4426	.3928	.2592	.3452	82.30	3.52	-4.71
2	0	1	66.75	56.50	.4547	.3846	.2712	.3441	78.93	15.66	-5.57
3	0	1	60.54	51.24	.4664	.3773	.2829	.3433	75.86	26.56	-6.20
4	0	1	55.22	46.74	.4776	.3708	.2942	.3426	73.05	36.32	-6.63
5	0	1	50.63	42.86	.4884	.3650	.3051	.3420	70.49	45.04	-6.90
6	0	1	46.65	39.49	.4987	.3599	.3156	.3416	68.13	52.81	-7.03
7	0	1	43.18	36.55	.5086	.3555	.3256	.3413	65.96	59.74	-7.05
8	0	1	40.13	33.97	.5180	.3515	.3352	.3412	63.96	65.88	-6.97
9	0	1	37.44	31.69	.5270	.3481	.3443	.3411	62.11	71.33	-6.83
10	0	1	35.05	29.67	.5356	.3451	.3529	.3411	60.39	76.14	-6.62
11	0	1	32.92	27.87	.5437	.3425	.3611	.3412	58.79	80.39	-6.37
12	0	1	31.01	26.25	.5515	.3402	.3689	.3414	57.30	84.14	-6.10
13	0	1	29.29	24.79	.5588	.3382	.3763	.3416	55.90	87.43	-5.80
14	0	1	27.73	23.47	.5658	.3364	.3832	.3418	54.58	90.33	-5.49
15	0	1	26.31	22.27	.5725	.3349	.3899	.3421	53.34	92.85	-5.17
16	0	1	25.02	21.17	.5788	.3335	.3961	.3424	52.16	95.06	-4.86
17	0	1	23.83	20.17	.5848	.3323	.4021	.3427	51.05	96.97	-4.55
18	0	1	22.73	19.24	.5905	.3312	.4077	.3430	49.99	98.62	-4.25
19	0	1	21.72	18.39	.5959	.3302	.4130	.3433	48.98	100.04	-3.96
20	0	1	20.79	17.59	.6011	.3293	.4181	.3437	48.02	101.26	-3.68
22	0	1	19.10	16.17	.6106	.3278	.4276	.3443	46.22	103.13	-3.16
24	0	1	17.63	14.93	.6192	.3264	.4362	.3449	44.55	104.38	-2.71
26	0	1	16.34	13.83	.6269	.3251	.4440	.3454	43.01	105.14	-2.31
28	0	1	15.19	12.85	.6339	.3240	.4512	.3459	41.56	105.48	-1.98
30	0	1	14.15	11.98	.6402	.3229	.4578	.3463	40.20	105.48	-1.70
32	0	1	13.23	11.19	.6459	.3218	.4638	.3467	38.92	105.20	-1.46
34	0	1	12.38	10.48	.6510	.3208	.4694	.3470	37.71	104.68	-1.27
36	0	1	11.62	9.835	.6557	.3197	.4747	.3472	36.56	103.97	-1.12
38	0	1	10.92	9.244	.6599	.3187	.4795	.3474	35.47	103.09	-1.00
40	0	1	10.28	8.702	.6637	.3177	.4841	.3475	34.42	102.08	-.91
45	0	1	8.895	7.529	.6718	.3151	.4942	.3477	32.00	99.11	-.77
50	0	1	7.753	6.562	.6783	.3126	.5029	.3477	29.80	95.67	-.72
55	0	1	6.799	5.755	.6834	.3102	.5104	.3475	27.80	91.98	-.73
60	0	1	5.994	5.073	.6877	.3079	.5171	.3473	25.96	88.13	-.76
65	0	1	5.308	4.493	.6912	.3057	.5230	.3470	24.25	84.21	-.80
70	0	1	4.720	3.995	.6942	.3037	.5284	.3467	22.67	80.28	-.85
75	0	1	4.211	3.564	.6968	.3017	.5332	.3463	21.19	76.37	-.88
80	0	1	3.769	3.190	.6990	.2999	.5376	.3460	19.80	72.50	-.91
90	0	1	3.045	2.577	.7028	.2967	.5453	.3453	17.28	64.99	-.94
100	0	1	2.484	2.102	.7058	.2939	.5520	.3447	15.03	57.82	-.94

ILLUMINANT A

R	Y	B	T(IN)	T	1931 X	1931 Y	1960 U	1960 V	1964 W*	1964 U*	1964 V*
0	0	2	68.49	63.01	0.4119	0.3947	0.2383	0.3426	82.48	-18.87	-7.46
1	0	2	61.20	51.80	.4242	.3857	.2502	.3413	76.19	-5.65	-8.16
2	0	2	55.02	46.57	.4361	.3776	.2620	.3402	72.94	5.72	-8.84
3	0	2	49.75	42.11	.4478	.3704	.2735	.3393	69.98	15.96	-9.31
4	0	2	45.25	38.30	.4590	.3640	.2847	.3386	67.27	25.15	-9.58
5	0	2	41.37	35.02	.4700	.3583	.2956	.3380	64.79	33.40	-9.70
6	0	2	38.01	32.17	.4805	.3534	.3061	.3376	62.51	40.76	-9.68
7	0	2	35.09	29.70	.4907	.3490	.3162	.3374	60.42	47.34	-9.56
8	0	2	32.52	27.53	.5005	.3452	.3259	.3373	58.49	53.21	-9.35
9	0	2	30.27	25.62	.5098	.3420	.3352	.3373	56.70	58.43	-9.07
10	0	2	28.27	23.93	.5188	.3391	.3441	.3373	55.04	63.05	-8.74
11	0	2	26.50	22.43	.5275	.3367	.3525	.3375	53.50	67.17	-8.37
12	0	2	24.91	21.08	.5357	.3346	.3606	.3378	52.06	70.81	-7.98
13	0	2	23.48	19.87	.5437	.3328	.3682	.3381	50.71	74.03	-7.58
14	0	2	22.19	18.78	.5512	.3312	.3755	.3384	49.45	76.87	-7.16
15	0	2	21.01	17.79	.5584	.3298	.3824	.3388	48.26	79.36	-6.75
16	0	2	19.95	16.88	.5653	.3286	.3890	.3392	47.14	81.55	-6.34
17	0	2	18.97	16.06	.5719	.3276	.3953	.3396	46.07	83.46	-5.94
18	0	2	18.08	15.30	.5782	.3267	.4013	.3401	45.06	85.13	-5.55
19	0	2	17.25	14.60	.5842	.3259	.4069	.3405	44.10	86.57	-5.18
20	0	2	16.49	13.95	.5899	.3252	.4123	.3410	43.19	87.81	-4.82
22	0	2	15.12	12.80	.6006	.3240	.4224	.3418	41.47	89.76	-4.16
24	0	2	13.93	11.79	.6102	.3230	.4316	.3427	39.90	91.12	-3.58
26	0	2	12.88	10.91	.6189	.3220	.4400	.3434	38.44	91.98	-3.07
28	0	2	11.96	10.12	.6269	.3212	.4477	.3441	37.08	92.43	-2.63
30	0	2	11.13	9.424	.6340	.3204	.4548	.3447	35.81	92.56	-2.26
32	0	2	10.39	8.798	.6405	.3196	.4613	.3452	34.61	92.40	-1.94
34	0	2	9.726	8.232	.6463	.3187	.4673	.3457	33.48	92.00	-1.68
36	0	2	9.119	7.719	.6516	.3179	.4729	.3461	32.41	91.41	-1.47
38	0	2	8.567	7.251	.6564	.3170	.4781	.3464	31.39	90.66	-1.29
40	0	2	8.062	6.823	.6607	.3161	.4830	.3466	30.42	89.77	-1.16
45	0	2	6.970	5.899	.6698	.3139	.4937	.3470	28.17	87.08	-.92
50	0	2	6.074	5.141	.6770	.3116	.5029	.3472	26.15	83.94	-.81
55	0	2	5.327	4.509	.6828	.3093	.5108	.3471	24.30	80.52	-.76
60	0	2	4.698	3.976	.6874	.3071	.5178	.3470	22.61	76.95	-.75
65	0	2	4.163	3.523	.6912	.3050	.5239	.3467	21.04	73.30	-.77
70	0	2	3.704	3.135	.6944	.3030	.5294	.3465	19.59	69.64	-.79
75	0	2	3.307	2.799	.6971	.3011	.5344	.3461	18.23	65.99	-.81
80	0	2	2.963	2.508	.6995	.2993	.5389	.3458	16.97	62.40	-.82
90	0	2	2.398	2.030	.7033	.2960	.5467	.3452	14.65	55.40	-.83
100	0	2	1.960	1.659	.7065	.2932	.5534	.3446	12.60	48.72	-.81

ILLUMINANT A

R	Y	B	T(IN)	T	1931 X	1931 Y	1960 U	1960 V	1964 W*	1964 U*	1964 V*
0	0	3	56.99	52.43	0.3933	0.3857	0.2299	0.3382	76.57	-25.90	-11.26
1	0	3	50.77	42.97	.4051	.3768	.2414	.3369	70.57	-13.29	-11.64
2	0	3	45.52	38.52	.4168	.3689	.2529	.3357	67.43	-2.67	-12.14
3	0	3	41.04	34.74	.4283	.3618	.2642	.3347	64.57	6.91	-12.44
4	0	3	37.22	31.50	.4395	.3555	.2752	.3340	61.96	15.53	-12.56
5	0	3	33.93	28.72	.4504	.3500	.2860	.3334	59.56	23.28	-12.52
6	0	3	31.09	26.32	.4611	.3452	.2965	.3330	57.36	30.23	-12.36
7	0	3	28.62	24.22	.4714	.3410	.3066	.3327	55.34	36.46	-12.09
8	0	3	26.46	22.40	.4814	.3375	.3164	.3327	53.47	42.03	-11.75
9	0	3	24.56	20.79	.4911	.3344	.3258	.3327	51.74	47.00	-11.34
10	0	3	22.89	19.37	.5005	.3317	.3348	.3329	50.14	51.43	-10.89
11	0	3	21.40	18.11	.5096	.3295	.3435	.3331	48.66	55.38	-10.40
12	0	3	20.07	16.99	.5183	.3276	.3518	.3335	47.27	58.89	-9.89
13	0	3	18.88	15.98	.5268	.3260	.3597	.3339	45.97	62.01	-9.38
14	0	3	17.81	15.07	.5349	.3246	.3673	.3343	44.76	64.77	-8.86
15	0	3	16.84	14.25	.5427	.3235	.3745	.3348	43.61	67.22	-8.34
16	0	3	15.96	13.51	.5501	.3225	.3814	.3354	42.54	69.37	-7.84
17	0	3	15.15	12.82	.5573	.3217	.3880	.3359	41.52	71.27	-7.35
18	0	3	14.41	12.20	.5642	.3210	.3943	.3365	40.55	72.93	-6.87
19	0	3	13.74	11.63	.5708	.3205	.4003	.3371	39.64	74.38	-6.42
20	0	3	13.11	11.10	.5771	.3200	.4060	.3377	38.76	75.63	-5.98
22	0	3	12.00	10.15	.5890	.3192	.4168	.3388	37.14	77.64	-5.17
24	0	3	11.03	9.337	.5998	.3186	.4266	.3399	35.64	79.07	-4.46
26	0	3	10.19	8.622	.6096	.3181	.4356	.3410	34.26	80.02	-3.83
28	0	3	9.442	7.992	.6186	.3176	.4438	.3419	32.98	80.57	-3.29
30	0	3	8.780	7.432	.6267	.3172	.4515	.3427	31.79	80.79	-2.83
32	0	3	8.188	6.931	.6340	.3166	.4585	.3435	30.66	80.74	-2.43
34	0	3	7.655	6.479	.6407	.3161	.4649	.3441	29.61	80.45	-2.10
36	0	3	7.173	6.071	.6467	.3155	.4710	.3447	28.61	79.97	-1.82
38	0	3	6.735	5.700	.6522	.3149	.4765	.3451	27.66	79.32	-1.59
40	0	3	6.335	5.362	.6571	.3142	.4817	.3455	26.76	78.53	-1.40
45	0	3	5.474	4.633	.6675	.3124	.4932	.3462	24.68	76.11	-1.07
50	0	3	4.769	4.036	.6756	.3103	.5029	.3466	22.81	73.23	-.89
55	0	3	4.184	3.541	.6820	.3082	.5113	.3467	21.11	70.06	-.79
60	0	3	3.691	3.124	.6871	.3062	.5186	.3466	19.55	66.74	-.75
65	0	3	3.273	2.770	.6912	.3041	.5249	.3464	18.11	63.34	-.73
70	0	3	2.914	2.467	.6946	.3021	.5306	.3462	16.78	59.92	-.73
75	0	3	2.605	2.205	.6975	.3003	.5357	.3459	15.54	56.51	-.74
80	0	3	2.336	1.977	.7000	.2985	.5403	.3456	14.38	53.15	-.74
90	0	3	1.895	1.604	.7040	.2953	.5483	.3450	12.27	46.62	-.73
100	0	3	1.553	1.315	.7072	.2925	.5551	.3444	10.39	40.40	-.70

ILLUMINANT A

R	Y	B	T(IN)	T	1931 X	1931 Y	1960 U	1960 V	1964 W*	1964 U*	1964 V*
0	0	4	47.58	43.78	0.3744	0.3750	0.2218	0.3333	71.11	-31.52	-15.05
1	0	4	42.28	35.79	.3858	.3663	.2330	.3318	65.39	-19.53	-15.11
2	0	4	37.80	31.99	.3970	.3585	.2440	.3305	62.37	-9.65	-15.44
3	0	4	33.99	28.77	.4082	.3515	.2550	.3295	59.60	-.71	-15.57
4	0	4	30.74	26.02	.4192	.3454	.2658	.3286	57.08	7.35	-15.53
5	0	4	27.94	23.65	.4300	.3401	.2764	.3280	54.76	14.60	-15.34
6	0	4	25.53	21.61	.4406	.3355	.2868	.3276	52.64	21.13	-15.03
7	0	4	23.44	19.84	.4510	.3315	.2969	.3274	50.68	26.99	-14.62
8	0	4	21.62	18.30	.4612	.3281	.3067	.3273	48.88	32.25	-14.14
9	0	4	20.02	16.94	.4711	.3252	.3161	.3274	47.21	36.95	-13.61
10	0	4	18.60	15.75	.4808	.3228	.3253	.3276	45.66	41.17	-13.03
11	0	4	17.35	14.69	.4902	.3208	.3341	.3279	44.23	44.94	-12.43
12	0	4	16.24	13.75	.4993	.3191	.3426	.3284	42.89	48.30	-11.81
13	0	4	15.25	12.90	.5082	.3177	.3507	.3289	41.64	51.30	-11.18
14	0	4	14.35	12.15	.5168	.3166	.3585	.3295	40.47	53.97	-10.56
15	0	4	13.54	11.46	.5251	.3157	.3660	.3301	39.37	56.35	-9.95
16	0	4	12.81	10.84	.5332	.3150	.3732	.3308	38.33	58.45	-9.34
17	0	4	12.14	10.28	.5410	.3145	.3801	.3315	37.36	60.31	-8.76
18	0	4	11.53	9.763	.5484	.3141	.3867	.3322	36.43	61.95	-8.20
19	0	4	10.98	9.290	.5556	.3138	.3931	.3330	35.55	63.39	-7.66
20	0	4	10.46	8.855	.5626	.3136	.3992	.3337	34.72	64.65	-7.14
22	0	4	9.549	8.082	.5757	.3133	.4106	.3352	33.17	66.68	-6.19
24	0	4	8.762	7.416	.5877	.3132	.4210	.3366	31.75	68.15	-5.34
26	0	4	8.077	6.836	.5988	.3132	.4307	.3379	30.45	69.17	-4.60
28	0	4	7.475	6.327	.6089	.3132	.4396	.3392	29.24	69.80	-3.95
30	0	4	6.942	5.876	.6181	.3131	.4478	.3403	28.11	70.10	-3.39
32	0	4	6.467	5.474	.6264	.3130	.4553	.3413	27.06	70.14	-2.92
34	0	4	6.041	5.113	.6340	.3128	.4623	.3421	26.07	69.94	-2.51
36	0	4	5.657	4.788	.6409	.3126	.4688	.3429	25.14	69.54	-2.17
38	0	4	5.308	4.493	.6471	.3122	.4748	.3436	24.25	69.00	-1.89
40	0	4	4.991	4.224	.6528	.3118	.4803	.3441	23.41	68.30	-1.65
45	0	4	4.309	3.647	.6646	.3104	.4926	.3452	21.48	66.11	-1.22
50	0	4	3.754	3.178	.6737	.3088	.5030	.3458	19.75	63.45	-.97
55	0	4	3.294	2.788	.6809	.3069	.5119	.3461	18.19	60.51	-.82
60	0	4	2.908	2.462	.6866	.3050	.5195	.3461	16.76	57.41	-.74
65	0	4	2.581	2.184	.6912	.3031	.5262	.3461	15.44	54.23	-.70
70	0	4	2.300	1.947	.6949	.3011	.5320	.3459	14.22	51.03	-.68
75	0	4	2.058	1.742	.6979	.2993	.5373	.3456	13.08	47.85	-.67
80	0	4	1.848	1.564	.7005	.2976	.5420	.3454	12.02	44.71	-.66
90	0	4	1.504	1.273	.7047	.2944	.5502	.3448	10.09	38.60	-.63
100	0	4	1.236	1.046	.7080	.2916	.5571	.3442	8.38	32.79	-.58

ILLUMINANT A

R	Y	B	T(IN)	T	1931 X	1931 Y	1960 U	1960 V	1964 W*	1964 U*	1964 V*
0	0	5	39.88	36.69	0.3555	0.3626	0.2142	0.3277	66.07	-35.88	-18.81
1	0	5	35.35	29.92	.3663	.3541	.2248	.3260	60.61	-24.51	-18.55
2	0	5	31.52	26.68	.3770	.3464	.2355	.3246	57.70	-15.32	-18.70
3	0	5	28.27	23.92	.3877	.3397	.2461	.3235	55.04	-7.02	-18.66
4	0	5	25.49	21.58	.3984	.3338	.2566	.3226	52.60	.49	-18.46
5	0	5	23.11	19.56	.4089	.3286	.2670	.3219	50.36	7.25	-18.11
6	0	5	21.06	17.82	.4194	.3242	.2772	.3214	48.30	13.35	-17.66
7	0	5	19.28	16.32	.4297	.3204	.2872	.3212	46.41	18.84	-17.11
8	0	5	17.73	15.01	.4399	.3172	.2969	.3211	44.67	23.78	-16.50
9	0	5	16.38	13.86	.4499	.3146	.3063	.3213	43.06	28.21	-15.84
10	0	5	15.19	12.85	.4598	.3124	.3155	.3215	41.56	32.19	-15.14
11	0	5	14.13	11.96	.4694	.3106	.3244	.3219	40.17	35.76	-14.42
12	0	5	13.19	11.17	.4789	.3091	.3330	.3225	38.88	38.97	-13.69
13	0	5	12.36	10.46	.4881	.3080	.3413	.3231	37.67	41.83	-12.96
14	0	5	11.61	9.826	.4972	.3072	.3494	.3238	36.55	44.39	-12.23
15	0	5	10.93	9.254	.5059	.3066	.3571	.3246	35.49	46.68	-11.52
16	0	5	10.32	8.738	.5145	.3062	.3646	.3254	34.49	48.71	-10.82
17	0	5	9.769	8.268	.5228	.3059	.3718	.3263	33.55	50.52	-10.15
18	0	5	9.264	7.841	.5309	.3058	.3787	.3272	32.67	52.12	-9.50
19	0	5	8.802	7.450	.5387	.3058	.3853	.3281	31.83	53.54	-8.88
20	0	5	8.378	7.091	.5463	.3059	.3917	.3290	31.03	54.78	-8.29
22	0	5	7.627	6.455	.5606	.3062	.4038	.3308	29.55	56.80	-7.19
24	0	5	6.983	5.910	.5740	.3067	.4150	.3326	28.20	58.30	-6.21
26	0	5	6.425	5.438	.5863	.3072	.4253	.3343	26.96	59.36	-5.35
28	0	5	5.936	5.025	.5976	.3077	.4348	.3359	25.82	60.04	-4.60
30	0	5	5.506	4.660	.6080	.3082	.4436	.3373	24.76	60.42	-3.95
32	0	5	5.123	4.336	.6175	.3085	.4518	.3386	23.77	60.52	-3.39
34	0	5	4.781	4.047	.6262	.3087	.4594	.3397	22.84	60.40	-2.91
36	0	5	4.474	3.786	.6340	.3089	.4663	.3408	21.97	60.08	-2.51
38	0	5	4.195	3.551	.6411	.3089	.4728	.3417	21.14	59.61	-2.17
40	0	5	3.943	3.337	.6476	.3087	.4788	.3424	20.36	59.00	-1.88
45	0	5	3.403	2.880	.6611	.3080	.4921	.3439	18.57	57.00	-1.36
50	0	5	2.964	2.509	.6716	.3068	.5032	.3448	16.97	54.54	-1.04
55	0	5	2.602	2.203	.6797	.3053	.5126	.3453	15.53	51.80	-.85
60	0	5	2.299	1.946	.6860	.3036	.5206	.3456	14.21	48.90	-.74
65	0	5	2.042	1.729	.6911	.3018	.5276	.3456	13.00	45.92	-.67
70	0	5	1.823	1.543	.6951	.3000	.5337	.3455	11.89	42.92	-.63
75	0	5	1.633	1.382	.6984	.2982	.5391	.3453	10.85	39.93	-.60
80	0	5	1.468	1.243	.7012	.2965	.5440	.3451	9.88	36.99	-.58
90	0	5	1.198	1.014	.7055	.2934	.5523	.3445	8.12	31.27	-.53
100	0	5	0.9878	0.8361	.7089	.2906	.5593	.3439			

ILLUMINANT A

R	Y	B	T(IN)	T	1931 X	1931 Y	1960 U	1960 V	1964 W*	1964 U*	1964 V*
0	0	6	33.55	30.86	0.3369	0.3488	0.2070	0.3214	61.42	-39.09	-22.50
1	0	6	29.66	25.11	.3470	.3404	.2172	.3196	56.20	-28.34	-21.90
2	0	6	26.38	22.33	.3571	.3329	.2274	.3180	53.40	-19.82	-21.88
3	0	6	23.60	19.98	.3672	.3264	.2376	.3168	50.83	-12.12	-21.67
4	0	6	21.23	17.97	.3774	.3207	.2477	.3158	48.48	-5.16	-21.30
5	0	6	19.20	16.25	.3876	.3157	.2578	.3150	46.32	1.13	-20.80
6	0	6	17.44	14.77	.3977	.3115	.2677	.3145	44.33	6.81	-20.20
7	0	6	15.93	13.48	.4079	.3079	.2775	.3142	42.50	11.92	-19.52
8	0	6	14.61	12.37	.4179	.3049	.2871	.3142	40.82	16.53	-18.78
9	0	6	13.46	11.39	.4279	.3024	.2965	.3143	39.26	20.69	-17.99
10	0	6	12.45	10.54	.4378	.3005	.3056	.3146	37.81	24.42	-17.17
11	0	6	11.56	9.783	.4476	.2989	.3146	.3151	36.47	27.79	-16.34
12	0	6	10.77	9.113	.4572	.2977	.3232	.3157	35.22	30.81	-15.50
13	0	6	10.06	8.517	.4667	.2969	.3317	.3164	34.05	33.53	-14.66
14	0	6	9.432	7.983	.4761	.2963	.3399	.3173	32.96	35.96	-13.83
15	0	6	8.865	7.503	.4853	.2960	.3478	.3182	31.94	38.14	-13.03
16	0	6	8.354	7.071	.4942	.2958	.3555	.3192	30.98	40.09	-12.24
17	0	6	7.891	6.679	.5030	.2959	.3629	.3202	30.08	41.83	-11.48
18	0	6	7.470	6.323	.5116	.2961	.3701	.3213	29.23	43.38	-10.75
19	0	6	7.086	5.998	.5200	.2964	.3770	.3224	28.42	44.75	-10.05
20	0	6	6.735	5.700	.5282	.2968	.3838	.3235	27.66	45.96	-9.38
22	0	6	6.115	5.175	.5438	.2978	.3965	.3257	26.24	47.96	-8.14
24	0	6	5.585	4.727	.5584	.2989	.4084	.3279	24.96	49.45	-7.04
26	0	6	5.129	4.341	.5721	.3000	.4194	.3299	23.78	50.53	-6.07
28	0	6	4.731	4.004	.5847	.3011	.4296	.3319	22.70	51.25	-5.21
30	0	6	4.381	3.708	.5964	.3022	.4391	.3337	21.70	51.66	-4.47
32	0	6	4.072	3.447	.6072	.3031	.4479	.3353	20.76	51.82	-3.84
34	0	6	3.797	3.214	.6170	.3038	.4561	.3368	19.89	51.76	-3.29
36	0	6	3.550	3.004	.6260	.3044	.4636	.3382	19.07	51.50	-2.83
38	0	6	3.327	2.816	.6341	.3048	.4707	.3393	18.30	51.09	-2.43
40	0	6	3.125	2.645	.6415	.3051	.4772	.3404	17.58	50.55	-2.10
45	0	6	2.696	2.282	.6570	.3051	.4914	.3423	15.91	48.72	-1.49
50	0	6	2.349	1.988	.6689	.3045	.5034	.3437	14.44	46.43	-1.11
55	0	6	2.063	1.746	.6782	.3034	.5134	.3445	13.11	43.86	-.87
60	0	6	1.825	1.544	.6853	.3019	.5219	.3449	11.90	41.13	-.72
65	0	6	1.623	1.373	.6909	.3003	.5292	.3451	10.79	38.33	-.63
70	0	6	1.450	1.227	.6953	.2987	.5356	.3451	9.77	35.50	-.57
75	0	6	1.301	1.101	.6989	.2970	.5412	.3449	8.82	32.70	-.53
80	0	6	1.172	0.9919	.7019	.2953	.5462	.3447			
90	0	6	0.9595	0.8122	.7064	.2923	.5547	.3442			
100	0	6	0.7941	0.6721	.7098	.2895	.5618	.3437			

ILLUMINANT A

R	Y	B	T(IN)	T	-----1931---- X	Y	----1960----- U	V	-------1964-------- W*	U*	V*
0	0	7	28.32	26.06	0.3188	0.3336	0.2003	0.3144	57.12	-41.30	-26.07
1	0	7	24.99	21.15	.3281	.3254	.2100	.3125	52.14	-31.14	-25.14
2	0	7	22.18	18.77	.3375	.3182	.2197	.3108	49.44	-23.27	-24.93
3	0	7	19.79	16.75	.3470	.3118	.2295	.3094	46.96	-16.15	-24.55
4	0	7	17.76	15.03	.3566	.3063	.2392	.3082	44.69	-9.70	-24.02
5	0	7	16.01	13.55	.3663	.3015	.2489	.3074	42.61	-3.87	-23.37
6	0	7	14.52	12.29	.3760	.2974	.2586	.3068	40.69	1.39	-22.62
7	0	7	13.22	11.19	.3858	.2941	.2681	.3065	38.92	6.14	-21.80
8	0	7	12.10	10.24	.3956	.2913	.2774	.3064	37.29	10.43	-20.93
9	0	7	11.12	9.409	.4054	.2890	.2867	.3065	35.78	14.29	-20.02
10	0	7	10.26	8.681	.4152	.2872	.2957	.3069	34.38	17.79	-19.08
11	0	7	9.498	8.039	.4250	.2859	.3046	.3074	33.08	20.93	-18.14
12	0	7	8.827	7.471	.4347	.2850	.3133	.3081	31.87	23.77	-17.19
13	0	7	8.231	6.966	.4444	.2844	.3218	.3089	30.75	26.32	-16.26
14	0	7	7.698	6.516	.4539	.2840	.3301	.3098	29.69	28.62	-15.34
15	0	7	7.221	6.112	.4634	.2840	.3381	.3109	28.71	30.68	-14.44
16	0	7	6.791	5.748	.4727	.2842	.3460	.3120	27.78	32.53	-13.56
17	0	7	6.403	5.420	.4819	.2845	.3537	.3132	26.91	34.19	-12.72
18	0	7	6.051	5.122	.4909	.2850	.3611	.3144	26.09	35.67	-11.91
19	0	7	5.730	4.850	.4998	.2856	.3683	.3157	25.32	36.98	-11.14
20	0	7	5.438	4.602	.5085	.2863	.3753	.3170	24.59	38.15	-10.40
22	0	7	4.923	4.167	.5252	.2880	.3887	.3197	23.23	40.08	-9.03
24	0	7	4.486	3.797	.5411	.2898	.4012	.3223	22.00	41.55	-7.80
26	0	7	4.110	3.479	.5561	.2916	.4130	.3248	20.88	42.62	-6.72
28	0	7	3.785	3.203	.5702	.2934	.4239	.3272	19.85	43.36	-5.78
30	0	7	3.500	2.963	.5833	.2950	.4341	.3294	18.91	43.79	-4.95
32	0	7	3.249	2.750	.5953	.2965	.4436	.3315	18.03	43.98	-4.24
34	0	7	3.026	2.562	.6064	.2978	.4525	.3333	17.21	43.96	-3.63
36	0	7	2.827	2.393	.6166	.2990	.4607	.3350	16.44	43.75	-3.11
38	0	7	2.648	2.242	.6259	.2999	.4683	.3365	15.72	43.39	-2.66
40	0	7	2.487	2.105	.6344	.3006	.4753	.3378	15.04	42.89	-2.29
45	0	7	2.144	1.815	.6521	.3016	.4908	.3405	13.49	41.20	-1.59
50	0	7	1.869	1.582	.6658	.3017	.5036	.3423	12.13	39.05	-1.15
55	0	7	1.643	1.390	.6763	.3010	.5143	.3434	10.90	36.63	-.87
60	0	7	1.454	1.231	.6844	.3000	.5234	.3441	9.79	34.05	-.70
65	0	7	1.295	1.096	.6907	.2986	.5311	.3444	8.78	31.40	-.59
70	0	7	1.159	0.9812	.6956	.2971	.5377	.3445			
75	0	7	1.042	0.8820	.6995	.2955	.5435	.3445			
80	0	7	0.9403	0.7959	.7026	.2940	.5487	.3443			
90	0	7	0.7730	0.6543	.7074	.2910	.5573	.3439			
100	0	7	0.6424	0.5437	.7110	.2883	.5645	.3434			

ILLUMINANT A

R	Y	B	T(IN)	T	1931 X	1931 Y	1960 U	1960 V	1964 W*	1964 U*	1964 V*
0	0	8	24.00	22.08	0.3014	0.3174	0.1942	0.3069	53.14	-42.62	-29.48
1	0	8	21.14	17.89	.3099	.3095	.2034	.3047	48.38	-33.05	-28.21
2	0	8	18.72	15.84	.3185	.3024	.2126	.3028	45.79	-25.78	-27.82
3	0	8	16.66	14.10	.3273	.2962	.2219	.3013	43.40	-19.20	-27.26
4	0	8	14.92	12.63	.3363	.2909	.2312	.3000	41.21	-13.24	-26.56
5	0	8	13.42	11.36	.3454	.2863	.2405	.2990	39.20	-7.86	-25.75
6	0	8	12.14	10.27	.3546	.2824	.2498	.2983	37.35	-3.00	-24.86
7	0	8	11.03	9.333	.3640	.2792	.2590	.2979	35.64	1.40	-23.91
8	0	8	10.06	8.518	.3734	.2766	.2681	.2978	34.06	5.37	-22.91
9	0	8	9.225	7.808	.3829	.2745	.2771	.2979	32.60	8.96	-21.88
10	0	8	8.490	7.186	.3925	.2729	.2860	.2983	31.24	12.20	-20.83
11	0	8	7.844	6.639	.4021	.2718	.2947	.2988	29.99	15.13	-19.78
12	0	8	7.273	6.156	.4117	.2710	.3034	.2996	28.82	17.76	-18.73
13	0	8	6.766	5.727	.4214	.2707	.3118	.3004	27.73	20.15	-17.70
14	0	8	6.315	5.345	.4310	.2706	.3202	.3015	26.71	22.30	-16.69
15	0	8	5.911	5.003	.4406	.2708	.3283	.3026	25.76	24.23	-15.71
16	0	8	5.548	4.696	.4501	.2712	.3363	.3039	24.86	25.97	-14.75
17	0	8	5.221	4.419	.4596	.2718	.3441	.3053	24.02	27.53	-13.83
18	0	8	4.925	4.168	.4690	.2726	.3517	.3067	23.23	28.93	-12.95
19	0	8	4.656	3.941	.4782	.2735	.3592	.3081	22.49	30.18	-12.11
20	0	8	4.411	3.734	.4874	.2746	.3664	.3097	21.78	31.29	-11.30
22	0	8	3.982	3.370	.5052	.2769	.3804	.3127	20.48	33.14	-9.81
24	0	8	3.619	3.063	.5223	.2793	.3936	.3158	19.31	34.55	-8.48
26	0	8	3.309	2.801	.5386	.2819	.4060	.3188	18.24	35.59	-7.30
28	0	8	3.041	2.574	.5540	.2844	.4177	.3217	17.26	36.31	-6.26
30	0	8	2.808	2.377	.5684	.2867	.4287	.3244	16.36	36.75	-5.36
32	0	8	2.604	2.204	.5819	.2889	.4389	.3269	15.53	36.95	-4.58
34	0	8	2.423	2.051	.5944	.2909	.4485	.3292	14.76	36.95	-3.91
36	0	8	2.262	1.914	.6059	.2926	.4573	.3313	14.04	36.76	-3.34
38	0	8	2.117	1.792	.6165	.2941	.4656	.3332	13.37	36.43	-2.85
40	0	8	1.987	1.682	.6261	.2953	.4733	.3349	12.73	35.97	-2.43
45	0	8	1.713	1.450	.6464	.2974	.4900	.3382	11.30	34.38	-1.66
50	0	8	1.494	1.264	.6621	.2983	.5039	.3406	10.03	32.34	-1.17
55	0	8	1.314	1.112	.6741	.2983	.5154	.3421	8.90	30.04	-.86
60	0	8	1.165	0.9862	.6833	.2977	.5251	.3431			
65	0	8	1.039	0.8797	.6903	.2966	.5332	.3437			
70	0	8	0.9320	0.7888	.6958	.2953	.5402	.3439			
75	0	8	0.8395	0.7105	.7000	.2939	.5462	.3440			
80	0	8	0.7591	0.6425	.7035	.2924	.5515	.3439			
90	0	8	0.6269	0.5306	.7085	.2896	.5603	.3435			
100	0	8	0.5234	0.4430	.7121	.2870	.5675	.3430			

ILLUMINANT A

R	Y	B	T(IN)	T	-----1931---- X	Y	----1960----- U	V	-------1964-------- W*	U*	V*
0	0	9	20.42	18.79	0.2849	0.3005	0.1888	0.2987	49.46	-43.16	-32.69
1	0	9	17.95	15.19	.2926	.2928	.1974	.2963	44.92	-34.16	-31.08
2	0	9	15.86	13.43	.3005	.2859	.2062	.2943	42.42	-27.45	-30.49
3	0	9	14.09	11.93	.3086	.2800	.2149	.2925	40.12	-21.39	-29.75
4	0	9	12.59	10.66	.3168	.2748	.2238	.2911	38.01	-15.90	-28.89
5	0	9	11.30	9.566	.3253	.2703	.2326	.2900	36.07	-10.94	-27.93
6	0	9	10.20	8.630	.3339	.2666	.2415	.2892	34.28	-6.45	-26.89
7	0	9	9.242	7.822	.3427	.2636	.2503	.2887	32.63	-2.40	-25.80
8	0	9	8.415	7.122	.3517	.2611	.2591	.2885	31.10	1.27	-24.68
9	0	9	7.695	6.513	.3608	.2592	.2678	.2886	29.69	4.58	-23.53
10	0	9	7.065	5.980	.3700	.2578	.2765	.2889	28.38	7.58	-22.37
11	0	9	6.512	5.511	.3793	.2568	.2851	.2895	27.16	10.28	-21.22
12	0	9	6.024	5.099	.3888	.2562	.2935	.2902	26.03	12.73	-20.08
13	0	9	5.592	4.733	.3983	.2560	.3019	.2912	24.97	14.94	-18.95
14	0	9	5.207	4.407	.4078	.2561	.3102	.2923	23.99	16.93	-17.86
15	0	9	4.864	4.117	.4174	.2565	.3184	.2935	23.07	18.73	-16.80
16	0	9	4.556	3.856	.4270	.2572	.3264	.2949	22.20	20.35	-15.77
17	0	9	4.279	3.622	.4366	.2581	.3344	.2964	21.39	21.81	-14.78
18	0	9	4.029	3.410	.4462	.2591	.3421	.2980	20.63	23.11	-13.83
19	0	9	3.803	3.219	.4557	.2603	.3497	.2997	19.91	24.28	-12.92
20	0	9	3.597	3.044	.4652	.2616	.3572	.3014	19.23	25.32	-12.05
22	0	9	3.237	2.740	.4839	.2646	.3717	.3049	17.98	27.06	-10.45
24	0	9	2.935	2.484	.5020	.2677	.3855	.3084	16.86	28.40	-9.02
26	0	9	2.677	2.266	.5195	.2710	.3987	.3119	15.84	29.38	-7.75
28	0	9	2.456	2.079	.5362	.2742	.4111	.3153	14.91	30.06	-6.64
30	0	9	2.264	1.916	.5521	.2772	.4228	.3185	14.05	30.49	-5.67
32	0	9	2.097	1.775	.5670	.2802	.4338	.3215	13.27	30.68	-4.83
34	0	9	1.949	1.650	.5809	.2828	.4441	.3243	12.54	30.67	-4.11
36	0	9	1.818	1.539	.5938	.2852	.4537	.3269	11.86	30.50	-3.49
38	0	9	1.701	1.440	.6057	.2873	.4627	.3292	11.23	30.18	-2.97
40	0	9	1.596	1.351	.6166	.2891	.4710	.3313	10.64	29.74	-2.52
45	0	9	1.375	1.164	.6398	.2925	.4893	.3355	9.30	28.21	-1.69
50	0	9	1.200	1.016	.6578	.2944	.5043	.3386	8.13	26.25	-1.16
55	0	9	1.057	0.8948	.6715	.2951	.5167	.3406			
60	0	9	0.9388	0.7946	.6820	.2950	.5270	.3420			
65	0	9	0.8391	0.7102	.6899	.2943	.5356	.3428			
70	0	9	0.7540	0.6382	.6960	.2933	.5429	.3432			
75	0	9	0.6807	0.5762	.7006	.2921	.5492	.3434			
80	0	9	0.6170	0.5223	.7043	.2907	.5546	.3434			
90	0	9	0.5121	0.4334	.7097	.2880	.5636	.3431			
100	0	9	0.4298	0.3638	.7134	.2855	.5708	.3427			

ILLUMINANT A

R	Y	B	T(IN)	T	1931 X	1931 Y	1960 U	1960 V	1964 W*	1964 U*	1964 V*
0	0	10	17.44	16.04	0.2695	0.2832	0.1840	0.2900	46.05	-43.06	-35.66
1	0	10	15.30	12.95	.2764	.2757	.1921	.2874	41.71	-34.61	-33.71
2	0	10	13.50	11.43	.2835	.2690	.2003	.2851	39.31	-28.42	-32.92
3	0	10	11.97	10.13	.2909	.2633	.2086	.2832	37.10	-22.83	-32.00
4	0	10	10.67	9.034	.2984	.2583	.2170	.2816	35.07	-17.77	-30.97
5	0	10	9.562	8.093	.3062	.2540	.2253	.2804	33.19	-13.20	-29.85
6	0	10	8.608	7.286	.3142	.2504	.2337	.2795	31.47	-9.08	-28.67
7	0	10	7.785	6.589	.3224	.2475	.2422	.2789	29.87	-5.35	-27.45
8	0	10	7.072	5.986	.3308	.2452	.2506	.2786	28.39	-1.98	-26.20
9	0	10	6.452	5.461	.3394	.2434	.2590	.2786	27.03	1.07	-24.93
10	0	10	5.911	5.003	.3482	.2421	.2674	.2789	25.76	3.83	-23.67
11	0	10	5.435	4.601	.3571	.2413	.2757	.2794	24.58	6.32	-22.42
12	0	10	5.017	4.246	.3662	.2408	.2840	.2802	23.48	8.57	-21.18
13	0	10	4.647	3.933	.3754	.2408	.2923	.2811	22.46	10.61	-19.98
14	0	10	4.318	3.655	.3848	.2410	.3005	.2823	21.51	12.45	-18.80
15	0	10	4.025	3.407	.3943	.2416	.3086	.2836	20.62	14.11	-17.66
16	0	10	3.763	3.185	.4038	.2424	.3166	.2851	19.78	15.60	-16.57
17	0	10	3.527	2.985	.4134	.2435	.3246	.2867	19.00	16.95	-15.51
18	0	10	3.315	2.806	.4231	.2448	.3324	.2885	18.26	18.16	-14.50
19	0	10	3.123	2.644	.4328	.2462	.3402	.2903	17.57	19.24	-13.54
20	0	10	2.949	2.496	.4424	.2478	.3478	.2922	16.91	20.20	-12.62
22	0	10	2.646	2.240	.4617	.2512	.3627	.2961	15.71	21.81	-10.92
24	0	10	2.393	2.025	.4807	.2550	.3771	.3001	14.63	23.04	-9.41
26	0	10	2.178	1.843	.4992	.2589	.3909	.3041	13.65	23.95	-8.07
28	0	10	1.994	1.688	.5171	.2628	.4040	.3080	12.77	24.58	-6.89
30	0	10	1.835	1.554	.5343	.2666	.4165	.3118	11.95	24.96	-5.87
32	0	10	1.697	1.437	.5506	.2703	.4283	.3154	11.21	25.12	-4.98
34	0	10	1.576	1.334	.5660	.2737	.4394	.3187	10.52	25.10	-4.22
36	0	10	1.469	1.244	.5803	.2768	.4498	.3218	9.88	24.91	-3.57
38	0	10	1.374	1.163	.5937	.2796	.4595	.3246	9.29	24.59	-3.01
40	0	10	1.289	1.091	.6060	.2821	.4686	.3272	8.74	24.15	-2.54
45	0	10	1.111	0.9402	.6323	.2869	.4884	.3324			
50	0	10	0.9700	0.8210	.6528	.2899	.5047	.3362			
55	0	10	0.8558	0.7243	.6685	.2915	.5181	.3389			
60	0	10	0.7614	0.6444	.6804	.2920	.5292	.3406			
65	0	10	0.6820	0.5773	.6893	.2917	.5383	.3417			
70	0	10	0.6144	0.5200	.6961	.2910	.5459	.3424			
75	0	10	0.5561	0.4707	.7013	.2900	.5524	.3427			
80	0	10	0.5054	0.4278	.7053	.2889	.5580	.3428			
90	0	10	0.4218	0.3570	.7110	.2864	.5671	.3427			
100	0	10	0.3559	0.3013	.7148	.2840	.5743	.3423			

ILLUMINANT A

R	Y	B	T(IN)	T	1931 X	1931 Y	1960 U	1960 V	1964 W*	1964 U*	1964 V*
0	0	12	12.86	11.84	0.2424	0.2484	0.1764	0.2712	39.97	-41.31	-40.74
1	0	12	11.26	9.531	.2479	.2414	.1836	.2682	36.01	-33.88	-38.10
2	0	12	9.907	8.385	.2535	.2352	.1908	.2655	33.79	-28.63	-36.91
3	0	12	8.759	7.414	.2594	.2299	.1981	.2632	31.75	-23.89	-35.62
4	0	12	7.782	6.587	.2656	.2253	.2054	.2613	29.86	-19.61	-34.25
5	0	12	6.947	5.880	.2720	.2213	.2129	.2598	28.12	-15.75	-32.82
6	0	12	6.230	5.273	.2787	.2180	.2204	.2586	26.51	-12.26	-31.35
7	0	12	5.612	4.750	.2856	.2154	.2279	.2578	25.02	-9.12	-29.86
8	0	12	5.077	4.297	.2928	.2132	.2355	.2573	23.65	-6.28	-28.37
9	0	12	4.613	3.904	.3002	.2116	.2432	.2571	22.37	-3.72	-26.89
10	0	12	4.208	3.562	.3079	.2105	.2508	.2572	21.18	-1.40	-25.42
11	0	12	3.853	3.262	.3159	.2098	.2586	.2576	20.07	.69	-23.99
12	0	12	3.542	2.998	.3240	.2095	.2663	.2584	19.05	2.58	-22.58
13	0	12	3.267	2.765	.3325	.2096	.2741	.2593	18.09	4.28	-21.22
14	0	12	3.023	2.559	.3411	.2101	.2820	.2605	17.19	5.82	-19.91
15	0	12	2.807	2.376	.3500	.2108	.2898	.2619	16.36	7.20	-18.64
16	0	12	2.614	2.212	.3590	.2119	.2977	.2635	15.58	8.45	-17.42
17	0	12	2.441	2.066	.3683	.2132	.3055	.2653	14.84	9.56	-16.26
18	0	12	2.286	1.935	.3777	.2147	.3134	.2672	14.15	10.56	-15.15
19	0	12	2.146	1.817	.3872	.2165	.3212	.2693	13.50	11.45	-14.09
20	0	12	2.020	1.710	.3969	.2184	.3290	.2715	12.89	12.24	-13.09
22	0	12	1.802	1.525	.4166	.2226	.3444	.2761	11.78	13.55	-11.25
24	0	12	1.620	1.371	.4366	.2274	.3597	.2810	10.78	14.53	-9.61
26	0	12	1.468	1.243	.4565	.2324	.3745	.2860	9.88	15.23	-8.16
28	0	12	1.339	1.134	.4763	.2375	.3890	.2910	9.07	15.68	-6.90
30	0	12	1.229	1.040	.4957	.2427	.4029	.2959	8.33	15.92	-5.81
32	0	12	1.134	0.9595	.5146	.2478	.4163	.3007			
34	0	12	1.051	0.8894	.5327	.2526	.4290	.3052			
36	0	12	0.9781	0.8279	.5499	.2572	.4411	.3095			
38	0	12	0.9140	0.7736	.5662	.2615	.4524	.3134			
40	0	12	0.8571	0.7254	.5813	.2654	.4630	.3171			
45	0	12	0.7392	0.6256	.6145	.2734	.4865	.3247			
50	0	12	0.6471	0.5477	.6408	.2791	.5058	.3305			
55	0	12	0.5731	0.4851	.6611	.2828	.5214	.3346			
60	0	12	0.5123	0.4336	.6763	.2848	.5341	.3374			
65	0	12	0.4614	0.3905	.6877	.2857	.5444	.3393			
70	0	12	0.4180	0.3538	.6962	.2858	.5528	.3404			
75	0	12	0.3806	0.3222	.7025	.2854	.5597	.3411			
80	0	12	0.3480	0.2946	.7072	.2847	.5656	.3415			
90	0	12	0.2940	0.2489	.7136	.2827	.5748	.3416			
100	0	12	0.2512	0.2126	.7177	.2807	.5819	.3414			

ILLUMINANT A

R	Y	B	T(IN)	T	1931 X	1931 Y	1960 U	1960 V	1964 W*	1964 U*	1964 V*
0	0	14	9.639	8.868	0.2203	0.2151	0.1715	0.2510	34.75	-38.15	-44.50
1	0	14	8.424	7.130	.2246	.2087	.1777	.2477	31.12	-31.64	-41.20
2	0	14	7.397	6.261	.2291	.2031	.1840	.2448	29.08	-27.18	-39.61
3	0	14	6.526	5.523	.2338	.1982	.1904	.2422	27.19	-23.16	-37.96
4	0	14	5.783	4.895	.2387	.1940	.1969	.2400	25.45	-19.55	-36.25
5	0	14	5.149	4.358	.2439	.1904	.2034	.2382	23.83	-16.28	-34.51
6	0	14	4.604	3.896	.2494	.1874	.2100	.2367	22.34	-13.35	-32.77
7	0	14	4.134	3.499	.2551	.1849	.2167	.2356	20.95	-10.70	-31.03
8	0	14	3.728	3.155	.2610	.1830	.2234	.2349	19.67	-8.32	-29.31
9	0	14	3.375	2.857	.2673	.1815	.2302	.2345	18.47	-6.17	-27.62
10	0	14	3.068	2.597	.2738	.1805	.2372	.2345	17.36	-4.24	-25.97
11	0	14	2.799	2.369	.2806	.1799	.2442	.2348	16.33	-2.50	-24.37
12	0	14	2.563	2.170	.2877	.1796	.2513	.2353	15.36	-.93	-22.82
13	0	14	2.356	1.994	.2951	.1798	.2585	.2362	14.47	.48	-21.32
14	0	14	2.172	1.838	.3028	.1802	.2658	.2373	13.63	1.74	-19.89
15	0	14	2.009	1.701	.3107	.1810	.2731	.2387	12.84	2.87	-18.51
16	0	14	1.864	1.578	.3190	.1821	.2806	.2403	12.11	3.88	-17.20
17	0	14	1.735	1.469	.3275	.1834	.2881	.2421	11.42	4.78	-15.95
18	0	14	1.619	1.371	.3362	.1850	.2957	.2441	10.77	5.57	-14.76
19	0	14	1.516	1.283	.3453	.1869	.3034	.2463	10.16	6.27	-13.64
20	0	14	1.422	1.204	.3545	.1889	.3111	.2487	9.59	6.89	-12.58
22	0	14	1.261	1.068	.3737	.1935	.3267	.2538	8.55	7.87	-10.64
24	0	14	1.129	0.9553	.3936	.1988	.3424	.2594			
26	0	14	1.018	0.8619	.4140	.2045	.3580	.2652			
28	0	14	0.9255	0.7834	.4348	.2105	.3735	.2712			
30	0	14	0.8469	0.7168	.4556	.2166	.3887	.2772			
32	0	14	0.7795	0.6598	.4763	.2229	.4035	.2832			
34	0	14	0.7214	0.6106	.4966	.2290	.4178	.2890			
36	0	14	0.6709	0.5679	.5164	.2350	.4315	.2945			
38	0	14	0.6267	0.5304	.5353	.2406	.4445	.2997			
40	0	14	0.5876	0.4974	.5533	.2460	.4568	.3046			
45	0	14	0.5077	0.4297	.5936	.2575	.4842	.3151			
50	0	14	0.4462	0.3776	.6263	.2663	.5069	.3232			
55	0	14	0.3972	0.3362	.6519	.2725	.5251	.3292			
60	0	14	0.3571	0.3023	.6712	.2764	.5396	.3334			
65	0	14	0.3237	0.2740	.6855	.2788	.5512	.3362			
70	0	14	0.2953	0.2499	.6959	.2799	.5604	.3381			
75	0	14	0.2707	0.2291	.7035	.2802	.5678	.3393			
80	0	14	0.2492	0.2110	.7091	.2801	.5738	.3400			
90	0	14	0.2135	0.1807	.7163	.2789	.5830	.3405			
100	0	14	0.1848	0.1564	.7206	.2774	.5897	.3405			

ILLUMINANT A

R	Y	B	T(IN)	T	1931 X	1931 Y	1960 U	1960 V	1964 W*	1964 U*	1964 V*
0	0	16	7.338	6.751	0.2031	0.1847	0.1689	0.2304	30.25	-34.23	-46.86
1	0	16	6.408	5.424	.2065	.1791	.1744	.2269	26.93	-28.55	-42.94
2	0	16	5.622	4.758	.2100	.1741	.1799	.2237	25.05	-24.76	-40.98
3	0	16	4.953	4.192	.2137	.1697	.1855	.2209	23.31	-21.35	-38.97
4	0	16	4.383	3.709	.2177	.1660	.1911	.2185	21.70	-18.28	-36.96
5	0	16	3.894	3.296	.2219	.1627	.1968	.2165	20.21	-15.53	-34.94
6	0	16	3.475	2.941	.2263	.1600	.2026	.2149	18.82	-13.04	-32.94
7	0	16	3.113	2.635	.2310	.1578	.2085	.2136	17.53	-10.82	-30.98
8	0	16	2.801	2.370	.2359	.1560	.2144	.2127	16.33	-8.81	-29.06
9	0	16	2.529	2.141	.2411	.1546	.2205	.2121	15.22	-7.02	-27.19
10	0	16	2.292	1.940	.2465	.1537	.2267	.2119	14.18	-5.40	-25.38
11	0	16	2.086	1.765	.2523	.1531	.2329	.2120	13.21	-3.95	-23.63
12	0	16	1.904	1.612	.2583	.1529	.2393	.2124	12.31	-2.66	-21.95
13	0	16	1.745	1.477	.2647	.1530	.2459	.2131	11.47	-1.50	-20.34
14	0	16	1.604	1.357	.2714	.1534	.2525	.2141	10.68	-.47	-18.80
15	0	16	1.479	1.252	.2783	.1541	.2594	.2154	9.94	.44	-17.34
16	0	16	1.368	1.158	.2856	.1551	.2663	.2169	9.25	1.25	-15.96
17	0	16	1.270	1.075	.2932	.1564	.2734	.2187	8.61	1.95	-14.64
18	0	16	1.182	1.000	.3011	.1579	.2806	.2207	8.00	2.57	-13.40
19	0	16	1.103	0.9334	.3094	.1597	.2880	.2229			
20	0	16	1.032	0.8735	.3179	.1617	.2955	.2254			
22	0	16	0.9108	0.7709	.3359	.1662	.3108	.2307			
24	0	16	0.8115	0.6868	.3550	.1716	.3265	.2367			
26	0	16	0.7294	0.6174	.3750	.1775	.3425	.2432			
28	0	16	0.6610	0.5595	.3959	.1839	.3586	.2499			
30	0	16	0.6034	0.5107	.4173	.1907	.3747	.2569			
32	0	16	0.5545	0.4693	.4390	.1977	.3907	.2639			
34	0	16	0.5126	0.4339	.4608	.2048	.4064	.2709			
36	0	16	0.4765	0.4033	.4824	.2118	.4216	.2777			
38	0	16	0.4451	0.3767	.5036	.2187	.4363	.2842			
40	0	16	0.4176	0.3535	.5240	.2253	.4502	.2904			
45	0	16	0.3619	0.3063	.5709	.2402	.4817	.3040			
50	0	16	0.3196	0.2705	.6102	.2522	.5079	.3148			
55	0	16	0.2863	0.2423	.6413	.2611	.5289	.3230			
60	0	16	0.2592	0.2194	.6650	.2672	.5454	.3288			
65	0	16	0.2366	0.2003	.6825	.2713	.5583	.3328			
70	0	16	0.2175	0.1841	.6952	.2736	.5683	.3355			
75	0	16	0.2008	0.1700	.7043	.2749	.5761	.3373			
80	0	16	0.1863	0.1577	.7108	.2754	.5822	.3384			
90	0	16	0.1618	0.1369	.7189	.2751	.5912	.3394			
100	0	16	0.1419	0.1201	.7233	.2741	.5973	.3396			

ILLUMINANT A

R	Y	B	T(IN)	T	1931 X	1931 Y	1960 U	1960 V	1964 W*	1964 U*	1964 V*
0	0	18	5.676	5.222	0.1901	0.1581	0.1683	0.2100	26.37	-30.03	-47.85
1	0	18	4.958	4.196	.1928	.1532	.1732	.2064	23.32	-25.09	-43.41
2	0	18	4.349	3.681	.1956	.1488	.1780	.2032	21.60	-21.87	-41.10
3	0	18	3.830	3.242	.1986	.1450	.1830	.2003	20.00	-18.97	-38.79
4	0	18	3.387	2.866	.2018	.1417	.1879	.1979	18.51	-16.38	-36.50
5	0	18	3.007	2.545	.2053	.1389	.1929	.1958	17.13	-14.04	-34.25
6	0	18	2.680	2.268	.2089	.1365	.1980	.1941	15.85	-11.94	-32.04
7	0	18	2.398	2.029	.2127	.1345	.2031	.1927	14.65	-10.06	-29.88
8	0	18	2.153	1.823	.2168	.1329	.2084	.1916	13.54	-8.37	-27.79
9	0	18	1.941	1.643	.2211	.1317	.2137	.1910	12.50	-6.86	-25.77
10	0	18	1.756	1.486	.2257	.1308	.2192	.1906	11.53	-5.50	-23.83
11	0	18	1.595	1.350	.2306	.1303	.2248	.1906	10.63	-4.30	-21.97
12	0	18	1.453	1.230	.2357	.1300	.2306	.1908	9.78	-3.23	-20.19
13	0	18	1.328	1.124	.2412	.1301	.2365	.1914	8.99	-2.28	-18.49
14	0	18	1.218	1.031	.2469	.1305	.2425	.1923	8.26	-1.44	-16.88
15	0	18	1.121	0.9486	.2530	.1311	.2488	.1934			
16	0	18	1.034	0.8756	.2593	.1320	.2552	.1948			
17	0	18	0.9578	0.8107	.2661	.1332	.2618	.1965			
18	0	18	0.8894	0.7527	.2731	.1345	.2685	.1984			
19	0	18	0.8282	0.7010	.2805	.1362	.2755	.2006			
20	0	18	0.7734	0.6546	.2883	.1380	.2826	.2030			
22	0	18	0.6799	0.5754	.3048	.1424	.2974	.2084			
24	0	18	0.6037	0.5110	.3227	.1476	.3129	.2146			
26	0	18	0.5411	0.4580	.3418	.1534	.3289	.2214			
28	0	18	0.4892	0.4141	.3621	.1599	.3453	.2287			
30	0	18	0.4459	0.3774	.3833	.1669	.3620	.2364			
32	0	18	0.4093	0.3465	.4054	.1743	.3788	.2443			
34	0	18	0.3783	0.3202	.4279	.1819	.3956	.2522			
36	0	18	0.3517	0.2977	.4507	.1897	.4121	.2601			
38	0	18	0.3287	0.2782	.4733	.1974	.4281	.2679			
40	0	18	0.3087	0.2613	.4957	.2051	.4436	.2753			
45	0	18	0.2687	0.2275	.5481	.2228	.4790	.2921			
50	0	18	0.2387	0.2021	.5935	.2378	.5086	.3058			
55	0	18	0.2153	0.1822	.6301	.2495	.5324	.3162			
60	0	18	0.1964	0.1662	.6583	.2580	.5510	.3239			
65	0	18	0.1807	0.1529	.6791	.2637	.5651	.3292			
70	0	18	0.1673	0.1416	.6940	.2675	.5758	.3328			
75	0	18	0.1556	0.1317	.7046	.2697	.5839	.3352			
80	0	18	0.1453	0.1230	.7121	.2710	.5901	.3368			
90	0	18	0.1279	0.1083	.7210	.2717	.5986	.3383			
100	0	18	0.1135	0.0961	.7256	.2713	.6042	.3388			

ILLUMINANT A

R	Y	B	T(IN)	T	1931 X	1931 Y	1960 U	1960 V	1964 W*	1964 U*	1964 V*
0	0	20	4.462	4.105	0.1805	0.1354	0.1694	0.1905	23.03	-25.91	-47.62
1	0	20	3.901	3.302	.1827	.1311	.1737	.1870	20.23	-21.63	-42.75
2	0	20	3.424	2.898	.1851	.1274	.1780	.1838	18.64	-18.89	-40.16
3	0	20	3.017	2.553	.1876	.1242	.1823	.1811	17.17	-16.43	-37.61
4	0	20	2.668	2.258	.1902	.1213	.1867	.1786	15.80	-14.22	-35.10
5	0	20	2.369	2.005	.1931	.1189	.1911	.1766	14.52	-12.24	-32.66
6	0	20	2.111	1.786	.1961	.1169	.1956	.1748	13.33	-10.46	-30.29
7	0	20	1.888	1.598	.1993	.1152	.2002	.1735	12.23	-8.87	-27.99
8	0	20	1.694	1.434	.2028	.1138	.2048	.1724	11.19	-7.44	-25.77
9	0	20	1.526	1.292	.2064	.1127	.2096	.1717	10.23	-6.16	-23.65
10	0	20	1.379	1.167	.2103	.1120	.2145	.1712	9.32	-5.03	-21.61
11	0	20	1.251	1.059	.2145	.1115	.2195	.1711	8.48	-4.02	-19.67
12	0	20	1.138	0.9632	.2189	.1113	.2247	.1713			
13	0	20	1.039	0.8794	.2236	.1113	.2300	.1718			
14	0	20	0.9515	0.8054	.2286	.1117	.2355	.1726			
15	0	20	0.8742	0.7399	.2339	.1122	.2412	.1736			
16	0	20	0.8057	0.6819	.2395	.1130	.2471	.1749			
17	0	20	0.7448	0.6304	.2455	.1141	.2532	.1765			
18	0	20	0.6906	0.5845	.2518	.1153	.2595	.1783			
19	0	20	0.6421	0.5435	.2584	.1168	.2660	.1804			
20	0	20	0.5988	0.5068	.2654	.1185	.2728	.1828			
22	0	20	0.5250	0.4444	.2805	.1226	.2869	.1881			
24	0	20	0.4651	0.3937	.2971	.1275	.3019	.1944			
26	0	20	0.4162	0.3522	.3151	.1331	.3177	.2013			
28	0	20	0.3758	0.3181	.3345	.1395	.3341	.2090			
30	0	20	0.3422	0.2897	.3552	.1464	.3511	.2171			
32	0	20	0.3141	0.2659	.3770	.1539	.3685	.2256			
34	0	20	0.2904	0.2458	.3997	.1618	.3860	.2344			
36	0	20	0.2702	0.2287	.4230	.1700	.4034	.2432			
38	0	20	0.2528	0.2140	.4466	.1783	.4206	.2520			
40	0	20	0.2378	0.2013	.4702	.1867	.4374	.2605			
45	0	20	0.2081	0.1761	.5269	.2067	.4761	.2802			
50	0	20	0.1861	0.1575	.5774	.2243	.5090	.2967			
55	0	20	0.1690	0.1431	.6190	.2385	.5354	.3095			
60	0	20	0.1553	0.1314	.6513	.2492	.5558	.3190			
65	0	20	0.1439	0.1218	.6753	.2568	.5710	.3257			
70	0	20	0.1342	0.1136	.6925	.2618	.5824	.3303			
75	0	20	0.1257	0.1064	.7046	.2651	.5907	.3333			
80	0	20	0.1181	0.1000	.7130	.2670	.5969	.3353			
90	0	20	0.1052	0.0890	.7228	.2687	.6050	.3374			
100	0	20	0.0943	0.0798	.7275	.2689	.6099	.3381			

ILLUMINANT A

R	Y	B	T(IN)	T	1931 X	1931 Y	1960 U	1960 V	1964 W*	1964 U*	1964 V*
0	0	25	2.622	2.412	0.1669	0.0938	0.1761	0.1485	16.53	-17.16	-43.20
1	0	25	2.304	1.950	.1685	.0912	.1794	.1456	14.23	-14.17	-37.74
2	0	25	2.031	1.719	.1701	.0889	.1826	.1431	12.95	-12.34	-34.76
3	0	25	1.797	1.521	.1719	.0868	.1859	.1409	11.75	-10.70	-31.88
4	0	25	1.595	1.350	.1738	.0850	.1892	.1389	10.63	-9.22	-29.11
5	0	25	1.420	1.202	.1758	.0835	.1926	.1373	9.58	-7.89	-26.44
6	0	25	1.269	1.074	.1780	.0823	.1961	.1359	8.60	-6.70	-23.89
7	0	25	1.137	0.9623	.1803	.0812	.1995	.1349			
8	0	25	1.022	0.8651	.1828	.0804	.2031	.1341			
9	0	25	0.9217	0.7801	.1855	.0798	.2069	.1335			
10	0	25	0.8337	0.7057	.1883	.0794	.2107	.1332			
11	0	25	0.7565	0.6403	.1914	.0792	.2146	.1332			
12	0	25	0.6885	0.5827	.1947	.0792	.2188	.1334			
13	0	25	0.6285	0.5319	.1983	.0793	.2231	.1339			
14	0	25	0.5755	0.4871	.2021	.0797	.2275	.1346			
15	0	25	0.5285	0.4473	.2061	.0802	.2322	.1356			
16	0	25	0.4868	0.4120	.2105	.0809	.2371	.1368			
17	0	25	0.4497	0.3807	.2151	.0819	.2423	.1383			
18	0	25	0.4167	0.3527	.2201	.0829	.2476	.1400			
19	0	25	0.3872	0.3278	.2254	.0842	.2533	.1420			
20	0	25	0.3609	0.3054	.2310	.0857	.2591	.1442			
22	0	25	0.3161	0.2675	.2434	.0892	.2717	.1494			
24	0	25	0.2799	0.2369	.2574	.0935	.2854	.1555			
26	0	25	0.2504	0.2120	.2729	.0985	.3002	.1626			
28	0	25	0.2263	0.1916	.2901	.1043	.3160	.1705			
30	0	25	0.2065	0.1747	.3089	.1109	.3328	.1792			
32	0	25	0.1900	0.1608	.3294	.1182	.3504	.1886			
34	0	25	0.1762	0.1491	.3512	.1261	.3686	.1985			
36	0	25	0.1645	0.1393	.3743	.1346	.3873	.2088			
38	0	25	0.1547	0.1309	.3984	.1435	.4061	.2193			
40	0	25	0.1462	0.1238	.4232	.1527	.4247	.2298			
45	0	25	0.1298	0.1098	.4857	.1761	.4691	.2551			
50	0	25	0.1178	0.0997	.5445	.1981	.5079	.2772			
55	0	25	0.1087	0.0920	.5952	.2171	.5392	.2950			
60	0	25	0.1014	0.0858	.6357	.2321	.5633	.3085			
65	0	25	0.0953	0.0807	.6661	.2433	.5808	.3182			
70	0	25	0.0901	0.0762	.6880	.2512	.5933	.3249			
75	0	25	0.0854	0.0723	.7032	.2565	.6021	.3294			
80	0	25	0.0812	0.0687	.7136	.2600	.6082	.3324			
90	0	25	0.0738	0.0625	.7252	.2637	.6154	.3356			
100	0	25	0.0674	0.0570	.7304	.2650	.6191	.3369			

ILLUMINANT A

R	Y	B	T(IN)	T	1931 X	1931 Y	1960 U	1960 V	1964 W*	1964 U*	1964 V*
0	0	30	1.696	1.560	0.1616	0.0686	0.1847	0.1176	12.00	-11.11	-36.17
1	0	30	1.501	1.271	.1629	.0671	.1873	.1157	10.08	-9.00	-30.64
2	0	30	1.333	1.128	.1642	.0657	.1899	.1140	9.03	-7.75	-27.64
3	0	30	1.187	1.005	.1657	.0646	.1925	.1125	8.04	-6.63	-24.77
4	0	30	1.060	0.8970	.1672	.0636	.1951	.1112			
5	0	30	0.9490	0.8033	.1689	.0627	.1978	.1102			
6	0	30	0.8522	0.7213	.1707	.0621	.2006	.1094			
7	0	30	0.7674	0.6496	.1726	.0615	.2034	.1088			
8	0	30	0.6930	0.5866	.1747	.0612	.2064	.1084			
9	0	30	0.6275	0.5311	.1769	.0610	.2095	.1083			
10	0	30	0.5698	0.4823	.1793	.0609	.2127	.1083			
11	0	30	0.5189	0.4392	.1818	.0609	.2160	.1086			
12	0	30	0.4738	0.4010	.1846	.0611	.2195	.1090			
13	0	30	0.4339	0.3672	.1876	.0615	.2232	.1097			
14	0	30	0.3984	0.3372	.1908	.0620	.2270	.1106			
15	0	30	0.3669	0.3105	.1942	.0626	.2311	.1117			
16	0	30	0.3388	0.2868	.1979	.0634	.2353	.1130			
17	0	30	0.3138	0.2656	.2019	.0643	.2398	.1146			
18	0	30	0.2914	0.2466	.2062	.0654	.2446	.1163			
19	0	30	0.2714	0.2297	.2108	.0666	.2496	.1183			
20	0	30	0.2535	0.2145	.2157	.0680	.2549	.1206			
22	0	30	0.2229	0.1887	.2265	.0713	.2663	.1258			
24	0	30	0.1982	0.1678	.2389	.0753	.2789	.1319			
26	0	30	0.1781	0.1508	.2528	.0801	.2927	.1390			
28	0	30	0.1617	0.1368	.2685	.0855	.3077	.1471			
30	0	30	0.1481	0.1254	.2858	.0918	.3239	.1560			
32	0	30	0.1369	0.1159	.3050	.0988	.3411	.1658			
34	0	30	0.1275	0.1079	.3257	.1066	.3592	.1763			
36	0	30	0.1197	0.1013	.3480	.1150	.3780	.1872			
38	0	30	0.1130	0.0957	.3717	.1239	.3971	.1986			
40	0	30	0.1073	0.0909	.3964	.1334	.4164	.2102			
45	0	30	0.0964	0.0816	.4605	.1581	.4632	.2386			
50	0	30	0.0884	0.0748	.5230	.1824	.5049	.2642			
55	0	30	0.0824	0.0697	.5785	.2041	.5391	.2853			
60	0	30	0.0776	0.0656	.6239	.2218	.5653	.3015			
65	0	30	0.0735	0.0622	.6584	.2353	.5844	.3133			
70	0	30	0.0699	0.0592	.6835	.2450	.5978	.3215			
75	0	30	0.0668	0.0565	.7009	.2518	.6069	.3270			
80	0	30	0.0639	0.0541	.7127	.2563	.6131	.3307			
90	0	30	0.0586	0.0496	.7258	.2612	.6200	.3347			
100	0	30	0.0540	0.0457	.7314	.2632	.6231	.3363			

ILLUMINANT A

R	Y	B	T(IN)	T	1931 X	1931 Y	1960 U	1960 V	1964 W*	1964 U*	1964 V*
0	0	40	0.9011	0.8290	0.1599	0.0439	0.1994	0.0821			
1	0	40	0.8095	0.6852	.1609	.0435	.2011	.0815			
2	0	40	0.7289	0.6169	.1620	.0431	.2029	.0810			
3	0	40	0.6577	0.5567	.1631	.0428	.2047	.0806			
4	0	40	0.5947	0.5034	.1644	.0427	.2066	.0804			
5	0	40	0.5389	0.4561	.1657	.0426	.2085	.0803			
6	0	40	0.4894	0.4142	.1672	.0426	.2106	.0804			
7	0	40	0.4455	0.3770	.1688	.0426	.2127	.0806			
8	0	40	0.4064	0.3439	.1705	.0428	.2149	.0809			
9	0	40	0.3715	0.3145	.1723	.0430	.2173	.0814			
10	0	40	0.3405	0.2882	.1743	.0433	.2198	.0820			
11	0	40	0.3127	0.2647	.1764	.0437	.2225	.0827			
12	0	40	0.2879	0.2437	.1788	.0442	.2253	.0836			
13	0	40	0.2658	0.2249	.1813	.0448	.2283	.0847			
14	0	40	0.2459	0.2081	.1839	.0455	.2315	.0860			
15	0	40	0.2281	0.1930	.1869	.0463	.2348	.0874			
16	0	40	0.2121	0.1795	.1900	.0473	.2384	.0890			
17	0	40	0.1977	0.1674	.1934	.0483	.2423	.0908			
18	0	40	0.1848	0.1564	.1970	.0495	.2463	.0927			
19	0	40	0.1732	0.1466	.2010	.0507	.2507	.0949			
20	0	40	0.1627	0.1377	.2052	.0521	.2552	.0973			
22	0	40	0.1447	0.1225	.2146	.0554	.2653	.1027			
24	0	40	0.1300	0.1100	.2254	.0593	.2765	.1091			
26	0	40	0.1180	0.0998	.2377	.0638	.2889	.1163			
28	0	40	0.1080	0.0914	.2516	.0690	.3027	.1246			
30	0	40	0.0998	0.0845	.2673	.0750	.3177	.1337			
32	0	40	0.0929	0.0787	.2848	.0818	.3339	.1438			
34	0	40	0.0872	0.0738	.3040	.0893	.3511	.1546			
36	0	40	0.0824	0.0697	.3250	.0975	.3693	.1662			
38	0	40	0.0782	0.0662	.3475	.1064	.3880	.1782			
40	0	40	0.0747	0.0633	.3714	.1159	.4072	.1906			
45	0	40	0.0679	0.0575	.4351	.1414	.4548	.2217			
50	0	40	0.0629	0.0533	.4997	.1675	.4984	.2506			
55	0	40	0.0591	0.0501	.5592	.1916	.5350	.2749			
60	0	40	0.0560	0.0474	.6091	.2119	.5634	.2940			
65	0	40	0.0534	0.0452	.6480	.2277	.5842	.3080			
70	0	40	0.0511	0.0433	.6766	.2394	.5988	.3178			
75	0	40	0.0490	0.0415	.6966	.2476	.6087	.3245			
80	0	40	0.0471	0.0398	.7102	.2532	.6153	.3290			
90	0	40	0.0435	0.0368	.7253	.2593	.6224	.3338			
100	0	40	0.0403	0.0341	.7317	.2619	.6254	.3358			

ILLUMINANT A

R	Y	B	T(IN)	T	1931 X	1931 Y	1960 U	1960 V	1964 W*	1964 U*	1964 V*
0	0	50	0.5926	0.5452	0.1610	0.0335	0.2091	0.0653			
1	0	50	0.5378	0.4552	.1619	.0335	.2104	.0654			
2	0	50	0.4831	0.4089	.1620	.0332	.2108	.0648			
3	0	50	0.4270	0.3614	.1609	.0324	.2098	.0635			
4	0	50	0.3782	0.3201	.1599	.0317	.2089	.0622			
5	0	50	0.3370	0.2853	.1594	.0312	.2086	.0613			
6	0	50	0.3016	0.2553	.1591	.0308	.2085	.0606			
7	0	50	0.2703	0.2288	.1589	.0305	.2085	.0600			
8	0	50	0.2427	0.2054	.1588	.0302	.2086	.0594			
9	0	50	0.2181	0.1846	.1587	.0299	.2088	.0590			
10	0	50	0.1963	0.1661	.1588	.0297	.2090	.0586			
11	0	50	0.1768	0.1496	.1588	.0295	.2093	.0582			
12	0	50	0.1594	0.1349	.1589	.0293	.2096	.0579			
13	0	50	0.1438	0.1217	.1591	.0291	.2099	.0576			
14	0	50	0.1299	0.1099	.1592	.0290	.2103	.0574			
15	0	50	0.1173	0.0993	.1594	.0289	.2107	.0572			
16	0	50	0.1061	0.0898	.1597	.0288	.2111	.0570			
17	0	50	0.0960	0.0813	.1599	.0287	.2115	.0569			
18	0	50	0.0870	0.0736	.1602	.0286	.2120	.0568			
19	0	50	0.0788	0.0667	.1605	.0286	.2125	.0567			
20	0	50	0.0715	0.0605	.1609	.0285	.2130	.0567			
22	0	50	0.0580	0.0491	.1609	.0281	.2134	.0560			
24	0	50	0.0478	0.0405	.1616	.0281	.2145	.0560			
26	0	50	0.0396	0.0336	.1627	.0283	.2160	.0563			
28	0	50	0.0330	0.0280	.1641	.0286	.2177	.0569			
30	0	50	0.0277	0.0234	.1657	.0290	.2197	.0577			
32	0	50	0.0233	0.0197	.1677	.0296	.2221	.0588			
34	0	50	0.0197	0.0167	.1700	.0303	.2248	.0601			
36	0	50	0.0167	0.0141	.1721	.0310	.2274	.0614			
38	0	50	0.0143	0.0121	.1753	.0321	.2311	.0635			
40	0	50	0.0124	0.0105	.1791	.0335	.2354	.0660			
45	0	50	0.0089	0.0075	.1918	.0383	.2494	.0748			
50	0	50	0.0068	0.0057	.2102	.0457	.2689	.0876			
55	0	50	0.0054	0.0046	.2364	.0563	.2953	.1055			
60	0	50	0.0045	0.0038	.2722	.0711	.3291	.1289			
65	0	50	0.0039	0.0033	.3185	.0904	.3696	.1573			
70	0	50	0.0035	0.0030	.3745	.1137	.4142	.1887			
75	0	50	0.0032	0.0027	.4365	.1398	.4590	.2205			
80	0	50	0.0030	0.0025	.4994	.1663	.4999	.2496			
90	0	50	0.0027	0.0022	.6063	.2114	.5609	.2933			
100	0	50	0.0024	0.0020	.6732	.2397	.5945	.3175			

ILLUMINANT A

R	Y	B	T(IN)	T	1931 X	1931 Y	1960 U	1960 V	1964 W*	1964 U*	1964 V*
0	1	0	98.66	90.77	0.4570	0.4199	0.2566	0.3536	95.35	.77	5.01
1	1	0	88.60	74.99	.4695	.4104	.2688	.3525	88.42	14.78	3.37
2	1	0	80.09	67.78	.4816	.4018	.2809	.3515	84.93	27.55	2.15
3	1	0	72.83	61.64	.4932	.3940	.2927	.3506	81.76	39.02	1.16
4	1	0	66.61	56.37	.5043	.3869	.3040	.3499	78.86	49.29	.37
5	1	0	61.23	51.83	.5147	.3806	.3149	.3493	76.21	58.45	-.25
6	1	0	56.56	47.87	.5247	.3750	.3254	.3488	73.78	66.57	-.72
7	1	0	52.48	44.42	.5340	.3700	.3353	.3484	71.54	73.76	-1.07
8	1	0	48.89	41.38	.5429	.3655	.3446	.3481	69.47	80.11	-1.32
9	1	0	45.71	38.69	.5512	.3616	.3535	.3479	67.56	85.70	-1.49
10	1	0	42.89	36.30	.5590	.3580	.3619	.3477	65.78	90.61	-1.59
11	1	0	40.36	34.16	.5664	.3549	.3698	.3476	64.12	94.91	-1.63
12	1	0	38.09	32.24	.5733	.3521	.3773	.3475	62.57	98.68	-1.64
13	1	0	36.04	30.50	.5798	.3496	.3843	.3475	61.11	101.95	-1.61
14	1	0	34.17	28.92	.5859	.3473	.3909	.3476	59.74	104.80	-1.55
15	1	0	32.47	27.49	.5917	.3453	.3971	.3476	58.45	107.27	-1.48
16	1	0	30.92	26.17	.5971	.3434	.4030	.3477	57.22	109.40	-1.40
17	1	0	29.48	24.96	.6023	.3418	.4086	.3478	56.06	111.22	-1.31
18	1	0	28.16	23.84	.6071	.3402	.4138	.3479	54.95	112.77	-1.22
19	1	0	26.94	22.80	.6117	.3388	.4188	.3480	53.89	114.09	-1.12
20	1	0	25.80	21.84	.6160	.3375	.4235	.3481	52.88	115.18	-1.03
22	1	0	23.75	20.10	.6239	.3351	.4322	.3483	50.98	116.81	-.86
24	1	0	21.95	18.58	.6309	.3331	.4401	.3485	49.22	117.83	-.70
26	1	0	20.36	17.23	.6373	.3311	.4473	.3486	47.58	118.34	-.57
28	1	0	18.94	16.03	.6430	.3294	.4538	.3488	46.04	118.44	-.47
30	1	0	17.67	14.95	.6481	.3278	.4599	.3489	44.59	118.22	-.39
32	1	0	16.52	13.98	.6527	.3262	.4654	.3490	43.22	117.72	-.34
34	1	0	15.47	13.09	.6569	.3248	.4706	.3490	41.93	116.99	-.30
36	1	0	14.52	12.29	.6607	.3234	.4754	.3490	40.69	116.07	-.28
38	1	0	13.65	11.55	.6641	.3220	.4798	.3490	39.51	115.01	-.28
40	1	0	12.85	10.87	.6673	.3207	.4840	.3490	38.39	113.82	-.28
45	1	0	11.11	9.403	.6740	.3176	.4934	.3488	35.77	110.41	-.34
50	1	0	9.674	8.188	.6794	.3148	.5015	.3485	33.39	106.60	-.44
55	1	0	8.473	7.172	.6838	.3121	.5087	.3482	31.21	102.54	-.54
60	1	0	7.459	6.313	.6875	.3096	.5150	.3479	29.20	98.35	-.64
65	1	0	6.594	5.581	.6907	.3073	.5206	.3475	27.35	94.10	-.74
70	1	0	5.852	4.953	.6934	.3052	.5258	.3471	25.62	89.85	-.81
75	1	0	5.211	4.410	.6958	.3032	.5304	.3467	24.00	85.63	-.88
80	1	0	4.654	3.939	.6979	.3014	.5347	.3464	22.48	81.47	-.93
90	1	0	3.743	3.168	.7015	.2982	.5422	.3457	19.72	73.38	-.99
100	1	0	3.038	2.571	.7044	.2954	.5487	.3451	17.25	65.65	-1.00

ILLUMINANT A

R	Y	B	T(IN)	T	-----1931---- X	Y	----1960----- U	V	-------1964-------- W*	U*	V*
0	2	0	97.37	89.58	0.4642	0.4292	0.2571	0.3566	94.86	1.43	8.65
1	2	0	87.43	74.00	.4768	.4194	.2694	.3555	87.96	15.42	6.76
2	2	0	79.03	66.89	.4891	.4104	.2816	.3545	84.49	28.19	5.41
3	2	0	71.88	60.84	.5007	.4022	.2935	.3536	81.32	39.67	4.28
4	2	0	65.73	55.64	.5118	.3949	.3049	.3528	78.44	49.93	3.34
5	2	0	60.43	51.15	.5223	.3882	.3159	.3522	75.80	59.06	2.58
6	2	0	55.82	47.25	.5321	.3822	.3263	.3516	73.38	67.16	1.96
7	2	0	51.79	43.84	.5414	.3769	.3363	.3511	71.15	74.31	1.46
8	2	0	48.25	40.84	.5501	.3721	.3457	.3508	69.09	80.63	1.07
9	2	0	45.12	38.19	.5582	.3678	.3546	.3504	67.19	86.17	.77
10	2	0	42.33	35.83	.5658	.3639	.3630	.3502	65.42	91.02	.54
11	2	0	39.84	33.72	.5730	.3605	.3709	.3500	63.76	95.28	.37
12	2	0	37.59	31.82	.5797	.3574	.3783	.3499	62.22	98.99	.24
13	2	0	35.57	30.10	.5860	.3546	.3853	.3497	60.77	102.21	.15
14	2	0	33.73	28.55	.5919	.3521	.3919	.3497	59.41	105.00	.09
15	2	0	32.05	27.13	.5974	.3498	.3981	.3496	58.12	107.41	.06
16	2	0	30.51	25.83	.6026	.3477	.4040	.3496	56.90	109.48	.03
17	2	0	29.10	24.63	.6075	.3458	.4095	.3496	55.74	111.26	.03
18	2	0	27.79	23.53	.6120	.3440	.4147	.3496	54.63	112.75	.03
19	2	0	26.59	22.50	.6164	.3424	.4196	.3496	53.58	114.01	.04
20	2	0	25.46	21.55	.6204	.3408	.4243	.3496	52.57	115.06	.05
22	2	0	23.44	19.84	.6279	.3381	.4329	.3497	50.68	116.60	.08
24	2	0	21.67	18.34	.6345	.3357	.4407	.3497	48.93	117.52	.10
26	2	0	20.09	17.01	.6405	.3335	.4478	.3497	47.29	117.96	.12
28	2	0	18.69	15.82	.6458	.3315	.4543	.3498	45.76	117.99	.13
30	2	0	17.43	14.75	.6506	.3296	.4603	.3498	44.32	117.71	.12
32	2	0	16.30	13.79	.6549	.3278	.4657	.3497	42.95	117.15	.10
34	2	0	15.26	12.92	.6588	.3262	.4708	.3497	41.66	116.39	.08
36	2	0	14.32	12.12	.6623	.3246	.4756	.3496	40.43	115.44	.04
38	2	0	13.46	11.39	.6656	.3231	.4800	.3496	39.26	114.34	-.00
40	2	0	12.67	10.73	.6685	.3217	.4841	.3495	38.13	113.12	-.05
45	2	0	10.96	9.274	.6748	.3183	.4934	.3492	35.52	109.67	-.19
50	2	0	9.540	8.074	.6799	.3153	.5015	.3488	33.15	105.82	-.33
55	2	0	8.354	7.071	.6842	.3125	.5085	.3484	30.98	101.75	-.46
60	2	0	7.353	6.223	.6878	.3099	.5148	.3480	28.99	97.56	-.59
65	2	0	6.500	5.501	.6908	.3075	.5205	.3476	27.13	93.32	-.70
70	2	0	5.767	4.881	.6935	.3054	.5256	.3472	25.41	89.07	-.78
75	2	0	5.135	4.346	.6958	.3034	.5302	.3468	23.80	84.87	-.86
80	2	0	4.586	3.881	.6979	.3015	.5345	.3464	22.29	80.72	-.91
90	2	0	3.687	3.121	.7014	.2983	.5420	.3457	19.53	72.65	-.97
00	2	0	2.992	2.532	.7044	.2954	.5485	.3451	17.08	64.95	-.99

ILLUMINANT A

R	Y	B	T(IN)	T	1931 X	1931 Y	1960 U	1960 V	1964 W*	1964 U*	1964 V*
0	3	0	96.12	88.43	0.4699	0.4364	0.2576	0.3588	94.38	2.00	11.38
1	3	0	86.30	73.04	.4826	.4264	.2699	.3577	87.50	15.91	9.32
2	3	0	78.01	66.03	.4949	.4172	.2822	.3567	84.05	28.67	7.86
3	3	0	70.95	60.05	.5067	.4087	.2941	.3558	80.90	40.13	6.62
4	3	0	64.89	54.92	.5177	.4010	.3056	.3551	78.03	50.37	5.58
5	3	0	59.65	50.49	.5281	.3941	.3166	.3544	75.40	59.47	4.70
6	3	0	55.10	46.64	.5379	.3878	.3271	.3537	72.99	67.52	3.97
7	3	0	51.13	43.27	.5471	.3822	.3371	.3532	70.77	74.65	3.37
8	3	0	47.63	40.31	.5556	.3771	.3465	.3528	68.72	80.91	2.87
9	3	0	44.54	37.70	.5636	.3726	.3554	.3524	66.82	86.41	2.47
10	3	0	41.78	35.37	.5711	.3685	.3638	.3521	65.06	91.22	2.14
11	3	0	39.32	33.28	.5781	.3648	.3717	.3518	63.42	95.42	1.86
12	3	0	37.11	31.41	.5846	.3615	.3791	.3516	61.88	99.07	1.65
13	3	0	35.11	29.72	.5907	.3584	.3861	.3514	60.44	102.25	1.47
14	3	0	33.29	28.18	.5964	.3557	.3926	.3513	59.08	104.99	1.32
15	3	0	31.64	26.78	.6017	.3532	.3988	.3512	57.79	107.35	1.20
16	3	0	30.12	25.49	.6067	.3509	.4046	.3511	56.58	109.37	1.11
17	3	0	28.72	24.31	.6114	.3488	.4101	.3510	55.42	111.09	1.03
18	3	0	27.44	23.22	.6158	.3469	.4153	.3509	54.32	112.55	.96
19	3	0	26.24	22.21	.6199	.3451	.4202	.3509	53.27	113.77	.91
20	3	0	25.13	21.27	.6238	.3434	.4248	.3508	52.27	114.77	.86
22	3	0	23.14	19.58	.6309	.3404	.4334	.3507	50.38	116.23	.77
24	3	0	21.38	18.10	.6372	.3377	.4411	.3507	48.64	117.09	.70
26	3	0	19.83	16.78	.6428	.3353	.4482	.3506	47.01	117.47	.64
28	3	0	18.45	15.61	.6478	.3330	.4546	.3505	45.48	117.45	.57
30	3	0	17.20	14.56	.6524	.3310	.4605	.3504	44.05	117.12	.50
32	3	0	16.08	13.61	.6565	.3291	.4659	.3503	42.69	116.52	.43
34	3	0	15.06	12.75	.6602	.3273	.4710	.3502	41.40	115.72	.36
36	3	0	14.13	11.96	.6635	.3256	.4756	.3501	40.17	114.74	.28
38	3	0	13.28	11.24	.6666	.3240	.4800	.3500	39.00	113.62	.20
40	3	0	12.50	10.58	.6694	.3224	.4841	.3498	37.88	112.38	.13
45	3	0	10.81	9.147	.6754	.3189	.4933	.3494	35.28	108.89	-.06
50	3	0	9.407	7.962	.6803	.3157	.5014	.3490	32.92	105.03	-.24
55	3	0	8.237	6.972	.6844	.3128	.5084	.3485	30.76	100.95	-.40
60	3	0	7.249	6.135	.6879	.3102	.5147	.3481	28.77	96.76	-.54
65	3	0	6.407	5.423	.6909	.3077	.5203	.3477	26.92	92.53	-.66
70	3	0	5.684	4.811	.6935	.3055	.5254	.3472	25.20	88.30	-.76
75	3	0	5.060	4.283	.6958	.3035	.5301	.3468	23.60	84.10	-.83
80	3	0	4.518	3.824	.6979	.3016	.5343	.3465	22.10	79.97	-.89
90	3	0	3.632	3.074	.7014	.2983	.5419	.3457	19.35	71.94	-.96
100	3	0	2.947	2.494	.7043	.2955	.5484	.3451	16.90	64.27	-.97

ILLUMINANT A

R	Y	B	T(IN)	T	1931 X	1931 Y	1960 U	1960 V	1964 W*	1964 U*	1964 V*
0	4	0	94.90	87.30	0.4745	0.4421	0.2580	0.3606	93.91	2.48	13.48
1	4	0	85.21	72.12	.4873	.4320	.2704	.3595	87.06	16.34	11.28
2	4	0	77.02	65.19	.4997	.4225	.2827	.3585	83.62	29.06	9.74
3	4	0	70.05	59.29	.5114	.4138	.2946	.3576	80.48	40.49	8.42
4	4	0	64.06	54.22	.5225	.4059	.3062	.3568	77.62	50.68	7.30
5	4	0	58.89	49.85	.5328	.3987	.3172	.3561	75.01	59.74	6.34
6	4	0	54.40	46.05	.5425	.3923	.3277	.3554	72.61	67.75	5.53
7	4	0	50.48	42.72	.5516	.3864	.3377	.3548	70.40	74.83	4.84
8	4	0	47.02	39.80	.5600	.3811	.3471	.3543	68.36	81.04	4.26
9	4	0	43.97	37.22	.5679	.3764	.3560	.3539	66.47	86.49	3.77
10	4	0	41.25	34.92	.5753	.3721	.3644	.3536	64.71	91.25	3.36
11	4	0	38.82	32.86	.5821	.3682	.3723	.3532	63.07	95.40	3.02
12	4	0	36.64	31.01	.5885	.3647	.3797	.3530	61.54	99.02	2.72
13	4	0	34.66	29.34	.5944	.3615	.3867	.3527	60.11	102.14	2.48
14	4	0	32.87	27.82	.5999	.3586	.3932	.3525	58.75	104.84	2.27
15	4	0	31.23	26.44	.6051	.3559	.3994	.3523	57.47	107.15	2.09
16	4	0	29.73	25.17	.6099	.3535	.4051	.3522	56.26	109.13	1.93
17	4	0	28.36	24.00	.6145	.3512	.4106	.3521	55.11	110.81	1.79
18	4	0	27.08	22.92	.6187	.3492	.4157	.3519	54.02	112.22	1.67
19	4	0	25.91	21.93	.6226	.3472	.4206	.3518	52.97	113.40	1.57
20	4	0	24.81	21.00	.6264	.3454	.4252	.3517	51.97	114.37	1.48
22	4	0	22.84	19.33	.6332	.3422	.4337	.3516	50.09	115.77	1.31
24	4	0	21.10	17.86	.6392	.3393	.4414	.3514	48.35	116.57	1.16
26	4	0	19.57	16.57	.6446	.3367	.4484	.3513	46.73	116.89	1.03
28	4	0	18.20	15.41	.6494	.3343	.4547	.3511	45.21	116.83	.91
30	4	0	16.98	14.37	.6537	.3321	.4606	.3509	43.78	116.46	.79
32	4	0	15.87	13.43	.6577	.3300	.4660	.3508	42.42	115.84	.68
34	4	0	14.86	12.58	.6612	.3282	.4710	.3506	41.14	115.01	.57
36	4	0	13.94	11.80	.6644	.3264	.4756	.3505	39.92	114.00	.47
38	4	0	13.10	11.09	.6673	.3247	.4800	.3503	38.75	112.87	.36
40	4	0	12.33	10.44	.6700	.3230	.4841	.3501	37.64	111.62	.26
45	4	0	10.66	9.022	.6758	.3194	.4932	.3496	35.04	108.10	.03
50	4	0	9.277	7.852	.6806	.3161	.5012	.3491	32.69	104.23	-.18
55	4	0	8.122	6.874	.6846	.3131	.5082	.3487	30.54	100.16	-.36
60	4	0	7.146	6.048	.6880	.3104	.5145	.3482	28.55	95.97	-.51
65	4	0	6.315	5.345	.6909	.3079	.5201	.3477	26.71	91.74	-.63
70	4	0	5.602	4.741	.6935	.3057	.5252	.3473	25.00	87.52	-.74
75	4	0	4.986	4.220	.6958	.3036	.5299	.3469	23.40	83.34	-.81
80	4	0	4.452	3.768	.6978	.3018	.5342	.3465	21.90	79.22	-.87
90	4	0	3.578	3.028	.7013	.2984	.5417	.3458	19.17	71.22	-.94
00	4	0	2.902	2.457	.7043	.2956	.5482	.3451	16.73	63.58	-.96

ILLUMINANT A

R	Y	B	T(IN)	T	1931 X	1931 Y	1960 U	1960 V	1964 W*	1964 U*	1964 V*
0	5	0	93.71	86.21	0.4782	0.4468	0.2583	0.3620	93.44	2.90	15.14
1	5	0	84.14	71.22	.4911	.4364	.2708	.3609	86.63	16.70	12.82
2	5	0	76.06	64.38	.5035	.4268	.2831	.3599	83.20	29.37	11.22
3	5	0	69.17	58.55	.5152	.4179	.2951	.3590	80.07	40.74	9.84
4	5	0	63.26	53.54	.5263	.4098	.3066	.3582	77.23	50.90	8.65
5	5	0	58.16	49.22	.5366	.4025	.3177	.3574	74.62	59.90	7.62
6	5	0	53.72	45.47	.5463	.3958	.3282	.3567	72.23	67.86	6.74
7	5	0	49.84	42.19	.5552	.3898	.3382	.3561	70.03	74.89	5.99
8	5	0	46.43	39.30	.5636	.3844	.3476	.3556	68.00	81.05	5.35
9	5	0	43.42	36.75	.5714	.3794	.3565	.3551	66.12	86.45	4.80
10	5	0	40.74	34.48	.5786	.3750	.3649	.3547	64.37	91.17	4.33
11	5	0	38.33	32.45	.5853	.3709	.3728	.3544	62.74	95.27	3.92
12	5	0	36.18	30.62	.5915	.3673	.3801	.3540	61.21	98.83	3.57
13	5	0	34.23	28.97	.5973	.3639	.3871	.3538	59.78	101.92	3.27
14	5	0	32.45	27.47	.6027	.3609	.3936	.3535	58.43	104.57	3.01
15	5	0	30.84	26.10	.6078	.3581	.3997	.3533	57.16	106.84	2.78
16	5	0	29.36	24.85	.6125	.3555	.4055	.3531	55.95	108.79	2.57
17	5	0	28.00	23.70	.6168	.3532	.4109	.3529	54.81	110.43	2.40
18	5	0	26.74	22.63	.6209	.3510	.4160	.3528	53.72	111.81	2.23
19	5	0	25.57	21.65	.6248	.3490	.4209	.3526	52.67	112.95	2.09
20	5	0	24.49	20.73	.6284	.3471	.4255	.3525	51.68	113.89	1.96
22	5	0	22.54	19.08	.6350	.3436	.4339	.3522	49.80	115.23	1.73
24	5	0	20.83	17.63	.6408	.3406	.4415	.3520	48.07	115.98	1.52
26	5	0	19.32	16.35	.6460	.3378	.4485	.3518	46.45	116.27	1.34
28	5	0	17.97	15.21	.6506	.3353	.4548	.3516	44.94	116.16	1.18
30	5	0	16.75	14.18	.6548	.3330	.4606	.3514	43.51	115.76	1.02
32	5	0	15.66	13.25	.6586	.3309	.4660	.3512	42.16	115.12	.88
34	5	0	14.66	12.41	.6620	.3289	.4709	.3509	40.88	114.27	.74
36	5	0	13.76	11.64	.6651	.3270	.4756	.3507	39.66	113.25	.61
38	5	0	12.93	10.94	.6679	.3252	.4799	.3505	38.50	112.09	.49
40	5	0	12.17	10.30	.6705	.3236	.4840	.3503	37.39	110.83	.37
45	5	0	10.51	8.898	.6761	.3197	.4931	.3498	34.81	107.30	.10
50	5	0	9.149	7.744	.6808	.3164	.5010	.3493	32.46	103.43	-.12
55	5	0	8.008	6.778	.6847	.3133	.5081	.3487	30.31	99.35	-.32
60	5	0	7.045	5.963	.6880	.3106	.5143	.3483	28.33	95.17	-.48
65	5	0	6.225	5.269	.6909	.3081	.5200	.3478	26.50	90.96	-.61
70	5	0	5.521	4.673	.6935	.3058	.5251	.3473	24.80	86.75	-.72
75	5	0	4.914	4.159	.6957	.3038	.5297	.3469	23.20	82.58	-.80
80	5	0	4.387	3.713	.6978	.3019	.5340	.3465	21.71	78.48	-.86
90	5	0	3.525	2.983	.7013	.2985	.5416	.3458	18.99	70.51	-.93
100	5	0	2.859	2.419	.7042	.2956	.5481	.3452	16.56	62.90	-.95

ILLUMINANT A

R	Y	B	T(IN)	T	1931 X	1931 Y	1960 U	1960 V	1964 W*	1964 U*	1964 V*
0	6	0	92.55	85.14	0.4814	0.4506	0.2586	0.3632	92.98	3.27	16.46
1	6	0	83.10	70.33	.4943	.4401	.2711	.3621	86.20	16.99	14.05
2	6	0	75.12	63.58	.5067	.4303	.2834	.3611	82.78	29.60	12.41
3	6	0	68.31	57.82	.5184	.4213	.2954	.3601	79.67	40.92	10.97
4	6	0	62.48	52.88	.5294	.4131	.3070	.3593	76.84	51.02	9.73
5	6	0	57.44	48.61	.5397	.4056	.3181	.3585	74.24	59.97	8.65
6	6	0	53.05	44.91	.5493	.3988	.3286	.3578	71.86	67.88	7.72
7	6	0	49.23	41.66	.5582	.3926	.3386	.3572	69.67	74.85	6.91
8	6	0	45.86	38.81	.5665	.3870	.3480	.3566	67.65	80.96	6.22
9	6	0	42.88	36.29	.5741	.3820	.3569	.3561	65.77	86.31	5.62
10	6	0	40.23	34.05	.5813	.3774	.3652	.3557	64.03	90.99	5.10
11	6	0	37.86	32.04	.5879	.3732	.3731	.3553	62.40	95.04	4.64
12	6	0	35.72	30.24	.5940	.3694	.3805	.3549	60.88	98.57	4.25
13	6	0	33.80	28.61	.5997	.3660	.3874	.3546	59.46	101.61	3.90
14	6	0	32.05	27.12	.6050	.3628	.3939	.3543	58.11	104.22	3.60
15	6	0	30.45	25.77	.6099	.3599	.4000	.3541	56.85	106.46	3.33
16	6	0	28.99	24.54	.6145	.3573	.4057	.3538	55.64	108.36	3.09
17	6	0	27.64	23.40	.6188	.3548	.4111	.3536	54.50	109.97	2.88
18	6	0	26.40	22.35	.6228	.3525	.4162	.3534	53.42	111.32	2.68
19	6	0	25.25	21.37	.6265	.3504	.4211	.3532	52.38	112.43	2.51
20	6	0	24.18	20.47	.6300	.3484	.4256	.3531	51.39	113.35	2.34
22	6	0	22.26	18.84	.6364	.3448	.4340	.3528	49.52	114.63	2.06
24	6	0	20.56	17.41	.6420	.3416	.4416	.3525	47.79	115.35	1.81
26	6	0	19.07	16.14	.6471	.3388	.4485	.3522	46.18	115.59	1.59
28	6	0	17.73	15.01	.6516	.3361	.4548	.3519	44.67	115.47	1.39
30	6	0	16.53	13.99	.6556	.3338	.4606	.3517	43.25	115.04	1.20
32	6	0	15.45	13.08	.6592	.3315	.4659	.3515	41.90	114.37	1.03
34	6	0	14.47	12.25	.6625	.3295	.4709	.3512	40.62	113.50	.87
36	6	0	13.57	11.49	.6656	.3275	.4755	.3510	39.41	112.47	.73
38	6	0	12.75	10.79	.6683	.3257	.4798	.3507	38.25	111.31	.59
40	6	0	12.00	10.16	.6708	.3240	.4838	.3505	37.14	110.03	.46
45	6	0	10.37	8.777	.6763	.3201	.4929	.3499	34.57	106.49	.17
50	6	0	9.022	7.637	.6809	.3166	.5008	.3494	32.23	102.62	-.08
55	6	0	7.896	6.683	.6847	.3135	.5079	.3488	30.09	98.55	-.28
60	6	0	6.945	5.879	.6880	.3108	.5141	.3483	28.12	94.38	-.45
65	6	0	6.136	5.193	.6909	.3082	.5197	.3478	26.29	90.17	-.59
70	6	0	5.441	4.606	.6934	.3060	.5249	.3474	24.59	85.99	-.70
75	6	0	4.842	4.098	.6957	.3039	.5295	.3469	23.01	81.83	-.78
80	6	0	4.322	3.658	.6977	.3020	.5338	.3465	21.52	77.74	-.84
90	6	0	3.472	2.939	.7012	.2986	.5414	.3458	18.81	69.80	-.91
100	6	0	2.815	2.383	.7042	.2957	.5480	.3452	16.39	62.23	-.93

ILLUMINANT A

R	Y	B	T(IN)	T	1931 X	1931 Y	1960 U	1960 V	1964 W*	1964 U*	1964 V*
0	8	0	90.30	83.08	0.4863	0.4565	0.2592	0.3649	92.09	3.85	18.40
1	8	0	81.08	68.63	.4992	.4458	.2716	.3639	85.35	17.42	15.87
2	8	0	73.29	62.03	.5116	.4358	.2840	.3628	81.97	29.90	14.16
3	8	0	66.65	56.42	.5233	.4265	.2960	.3619	78.88	41.10	12.65
4	8	0	60.96	51.59	.5343	.4181	.3076	.3610	76.07	51.07	11.33
5	8	0	56.04	47.43	.5445	.4103	.3186	.3602	73.50	59.91	10.17
6	8	0	51.76	43.81	.5539	.4033	.3292	.3595	71.13	67.71	9.16
7	8	0	48.03	40.65	.5627	.3969	.3391	.3588	68.96	74.57	8.28
8	8	0	44.74	37.87	.5708	.3911	.3485	.3582	66.95	80.58	7.51
9	8	0	41.83	35.40	.5784	.3858	.3574	.3576	65.09	85.84	6.83
10	8	0	39.24	33.21	.5853	.3811	.3657	.3571	63.36	90.42	6.24
11	8	0	36.93	31.26	.5917	.3767	.3735	.3567	61.75	94.39	5.71
12	8	0	34.85	29.49	.5977	.3727	.3809	.3563	60.24	97.84	5.25
13	8	0	32.96	27.90	.6032	.3691	.3878	.3559	58.82	100.80	4.84
14	8	0	31.26	26.45	.6083	.3658	.3942	.3555	57.49	103.34	4.48
15	8	0	29.70	25.13	.6131	.3627	.4003	.3552	56.23	105.51	4.15
16	8	0	28.27	23.93	.6175	.3599	.4060	.3549	55.04	107.35	3.85
17	8	0	26.95	22.81	.6216	.3573	.4113	.3547	53.90	108.91	3.58
18	8	0	25.74	21.79	.6254	.3549	.4164	.3544	52.83	110.20	3.34
19	8	0	24.62	20.84	.6290	.3526	.4212	.3542	51.79	111.26	3.12
20	8	0	23.57	19.95	.6323	.3505	.4257	.3540	50.81	112.13	2.92
22	8	0	21.69	18.36	.6384	.3467	.4340	.3536	48.95	113.34	2.55
24	8	0	20.04	16.96	.6438	.3433	.4415	.3532	47.24	113.98	2.23
26	8	0	18.58	15.73	.6486	.3403	.4484	.3528	45.64	114.16	1.95
28	8	0	17.28	14.62	.6529	.3375	.4546	.3525	44.13	113.99	1.70
30	8	0	16.11	13.63	.6567	.3350	.4603	.3522	42.72	113.52	1.48
32	8	0	15.05	12.74	.6602	.3326	.4656	.3519	41.38	112.82	1.27
34	8	0	14.09	11.93	.6633	.3304	.4706	.3516	40.12	111.93	1.08
36	8	0	13.22	11.19	.6662	.3284	.4751	.3513	38.91	110.88	.90
38	8	0	12.42	10.51	.6688	.3265	.4794	.3511	37.76	109.70	.74
40	8	0	11.68	9.888	.6713	.3247	.4834	.3508	36.66	108.42	.59
45	8	0	10.09	8.540	.6766	.3207	.4925	.3501	34.10	104.87	.26
50	8	0	8.775	7.427	.6810	.3171	.5004	.3495	31.78	101.00	-.01
55	8	0	7.677	6.498	.6847	.3139	.5074	.3490	29.65	96.95	-.23
60	8	0	6.751	5.714	.6880	.3111	.5137	.3484	27.69	92.80	-.41
65	8	0	5.962	5.046	.6908	.3085	.5193	.3479	25.88	88.62	-.55
70	8	0	5.286	4.474	.6933	.3062	.5245	.3474	24.19	84.46	-.67
75	8	0	4.702	3.980	.6956	.3041	.5292	.3470	22.62	80.34	-.75
80	8	0	4.196	3.552	.6976	.3021	.5334	.3466	21.14	76.28	-.81
90	8	0	3.370	2.852	.7011	.2987	.5411	.3459	18.45	68.40	-.89
100	8	0	2.731	2.312	.7040	.2958	.5477	.3452	16.06	60.89	-.91

ILLUMINANT A

R	Y	B	T(IN)	T	1931 X	1931 Y	1960 U	1960 V	1964 W*	1964 U*	1964 V*
0	10	0	88.14	81.09	0.4899	0.4608	0.2595	0.3662	91.21	4.28	19.73
1	10	0	79.14	66.98	.5028	.4499	.2720	.3651	84.53	17.69	17.12
2	10	0	71.54	60.55	.5152	.4398	.2844	.3641	81.17	30.03	15.36
3	10	0	65.06	55.07	.5269	.4304	.2964	.3631	78.11	41.09	13.80
4	10	0	59.50	50.36	.5378	.4217	.3080	.3622	75.32	50.93	12.43
5	10	0	54.69	46.29	.5479	.4138	.3190	.3614	72.77	59.65	11.22
6	10	0	50.52	42.76	.5573	.4066	.3295	.3606	70.42	67.34	10.16
7	10	0	46.87	39.67	.5659	.4001	.3394	.3599	68.26	74.09	9.22
8	10	0	43.66	36.95	.5740	.3941	.3488	.3593	66.27	80.01	8.40
9	10	0	40.82	34.55	.5813	.3887	.3576	.3587	64.42	85.18	7.67
10	10	0	38.29	32.41	.5882	.3838	.3659	.3582	62.71	89.67	7.02
11	10	0	36.03	30.50	.5944	.3793	.3737	.3577	61.11	93.56	6.45
12	10	0	34.00	28.78	.6003	.3752	.3810	.3572	59.61	96.93	5.94
13	10	0	32.16	27.22	.6056	.3714	.3879	.3568	58.20	99.82	5.49
14	10	0	30.49	25.81	.6106	.3680	.3943	.3564	56.88	102.30	5.08
15	10	0	28.97	24.52	.6152	.3648	.4003	.3561	55.63	104.41	4.71
16	10	0	27.57	23.34	.6195	.3619	.4060	.3557	54.44	106.20	4.38
17	10	0	26.29	22.25	.6235	.3592	.4113	.3554	53.32	107.70	4.07
18	10	0	25.10	21.25	.6272	.3567	.4163	.3551	52.24	108.95	3.80
19	10	0	24.01	20.32	.6306	.3543	.4211	.3549	51.22	109.97	3.54
20	10	0	22.99	19.46	.6339	.3521	.4256	.3546	50.24	110.80	3.31
22	10	0	21.15	17.90	.6397	.3481	.4339	.3541	48.40	111.95	2.89
24	10	0	19.54	16.54	.6449	.3446	.4413	.3537	46.69	112.53	2.53
26	10	0	18.11	15.33	.6495	.3414	.4481	.3533	45.10	112.67	2.21
28	10	0	16.83	14.25	.6537	.3385	.4543	.3529	43.61	112.46	1.92
30	10	0	15.69	13.28	.6574	.3359	.4600	.3526	42.20	111.96	1.66
32	10	0	14.66	12.41	.6607	.3335	.4653	.3522	40.88	111.24	1.43
34	10	0	13.72	11.61	.6638	.3312	.4702	.3519	39.62	110.33	1.22
36	10	0	12.87	10.89	.6666	.3291	.4747	.3516	38.42	109.27	1.02
38	10	0	12.09	10.23	.6691	.3272	.4790	.3513	37.27	108.08	.85
40	10	0	11.37	9.625	.6715	.3253	.4830	.3510	36.18	106.79	.68
45	10	0	9.817	8.309	.6766	.3211	.4921	.3503	33.64	103.25	.33
50	10	0	8.535	7.224	.6810	.3175	.5000	.3497	31.33	99.39	.04
55	10	0	7.465	6.318	.6847	.3143	.5070	.3491	29.22	95.35	-.19
60	10	0	6.562	5.554	.6878	.3114	.5133	.3485	27.27	91.23	-.37
65	10	0	5.793	4.903	.6907	.3088	.5189	.3480	25.47	87.08	-.52
70	10	0	5.135	4.346	.6932	.3064	.5241	.3475	23.80	82.95	-.64
75	10	0	4.567	3.865	.6954	.3043	.5288	.3471	22.23	78.86	-.72
80	10	0	4.074	3.449	.6974	.3023	.5331	.3466	20.77	74.83	-.79
90	10	0	3.270	2.768	.7009	.2989	.5408	.3459	18.10	67.02	-.86
100	10	0	2.649	2.242	.7039	.2960	.5474	.3452	15.72	59.57	-.88

ILLUMINANT A

R	Y	B	T(IN)	T	1931 X	1931 Y	1960 U	1960 V	1964 W*	1964 U*	1964 V*
0	15	0	83.07	76.42	0.4957	0.4677	0.2602	0.3682	89.09	4.88	21.62
1	15	0	74.58	63.13	.5086	.4567	.2726	.3672	82.54	17.87	18.89
2	15	0	67.42	57.06	.5209	.4463	.2849	.3661	79.25	29.83	17.07
3	15	0	61.31	51.89	.5324	.4367	.2968	.3651	76.25	40.54	15.46
4	15	0	56.06	47.45	.5432	.4278	.3083	.3642	73.51	50.06	14.02
5	15	0	51.53	43.62	.5531	.4196	.3193	.3634	71.00	58.48	12.73
6	15	0	47.59	40.28	.5623	.4122	.3297	.3625	68.70	65.89	11.60
7	15	0	44.15	37.37	.5708	.4054	.3396	.3618	66.58	72.39	10.59
8	15	0	41.12	34.80	.5785	.3992	.3489	.3611	64.62	78.07	9.69
9	15	0	38.44	32.53	.5857	.3936	.3576	.3604	62.81	83.02	8.89
10	15	0	36.05	30.52	.5923	.3884	.3658	.3598	61.12	87.31	8.17
11	15	0	33.92	28.71	.5983	.3837	.3735	.3593	59.55	91.02	7.53
12	15	0	32.00	27.08	.6039	.3794	.3807	.3588	58.08	94.22	6.95
13	15	0	30.26	25.61	.6090	.3754	.3875	.3583	56.69	96.97	6.43
14	15	0	28.68	24.28	.6138	.3718	.3939	.3578	55.39	99.31	5.96
15	15	0	27.25	23.06	.6182	.3684	.3998	.3574	54.16	101.30	5.54
16	15	0	25.93	21.95	.6222	.3653	.4054	.3570	52.99	102.98	5.15
17	15	0	24.72	20.92	.6260	.3624	.4107	.3567	51.88	104.38	4.79
18	15	0	23.60	19.97	.6295	.3598	.4157	.3563	50.83	105.54	4.47
19	15	0	22.56	19.09	.6328	.3573	.4203	.3560	49.82	106.48	4.17
20	15	0	21.60	18.28	.6358	.3549	.4248	.3557	48.86	107.23	3.89
22	15	0	19.86	16.81	.6414	.3507	.4329	.3551	47.04	108.24	3.39
24	15	0	18.34	15.52	.6463	.3469	.4403	.3546	45.36	108.73	2.96
26	15	0	16.99	14.38	.6506	.3436	.4470	.3541	43.79	108.79	2.58
28	15	0	15.79	13.36	.6545	.3405	.4532	.3536	42.32	108.52	2.25
30	15	0	14.71	12.45	.6580	.3377	.4588	.3532	40.94	107.98	1.95
32	15	0	13.73	11.62	.6612	.3351	.4641	.3528	39.63	107.22	1.68
34	15	0	12.85	10.87	.6641	.3327	.4689	.3524	38.39	106.29	1.44
36	15	0	12.04	10.19	.6667	.3305	.4735	.3521	37.21	105.22	1.22
38	15	0	11.31	9.571	.6692	.3285	.4777	.3517	36.08	104.03	1.02
40	15	0	10.63	9.000	.6714	.3265	.4817	.3514	35.00	102.74	.83
45	15	0	9.171	7.762	.6764	.3222	.4908	.3506	32.50	99.22	.45
50	15	0	7.965	6.742	.6806	.3184	.4987	.3499	30.23	95.41	.14
55	15	0	6.960	5.891	.6843	.3150	.5058	.3493	28.15	91.43	-.11
60	15	0	6.113	5.174	.6874	.3120	.5121	.3487	26.24	87.38	-.30
65	15	0	5.393	4.564	.6902	.3094	.5178	.3481	24.47	83.30	-.45
70	15	0	4.776	4.043	.6927	.3070	.5230	.3476	22.83	79.25	-.57
75	15	0	4.245	3.593	.6950	.3048	.5278	.3472	21.29	75.24	-.66
80	15	0	3.785	3.204	.6970	.3028	.5321	.3467	19.85	71.29	-.73
90	15	0	3.034	2.568	.7006	.2993	.5399	.3460	17.24	63.63	-.80
100	15	0	2.456	2.079	.7036	.2963	.5466	.3453	14.91	56.33	-.82

ILLUMINANT A

R	Y	B	T(IN)	T	-----1931---- X	Y	----1960----- U	V	-------1964-------- W*	U*	V*
0	20	0	78.39	72.12	0.4990	0.4720	0.2604	0.3694	87.06	5.03	22.48
1	20	0	70.38	59.57	.5118	.4609	.2727	.3684	80.64	17.60	19.71
2	20	0	63.62	53.85	.5240	.4504	.2849	.3673	77.40	29.18	17.88
3	20	0	57.85	48.96	.5354	.4406	.2968	.3663	74.46	39.54	16.24
4	20	0	52.89	44.77	.5460	.4316	.3082	.3654	71.77	48.74	14.78
5	20	0	48.61	41.15	.5558	.4233	.3191	.3645	69.31	56.87	13.47
6	20	0	44.89	38.00	.5648	.4158	.3294	.3637	67.05	64.01	12.30
7	20	0	41.64	35.24	.5731	.4088	.3391	.3629	64.96	70.27	11.26
8	20	0	38.77	32.82	.5807	.4025	.3483	.3622	63.04	75.73	10.32
9	20	0	36.24	30.67	.5877	.3967	.3570	.3615	61.26	80.49	9.49
10	20	0	33.98	28.76	.5942	.3914	.3651	.3608	59.60	84.60	8.74
11	20	0	31.96	27.05	.6001	.3866	.3728	.3602	58.05	88.16	8.06
12	20	0	30.14	25.51	.6055	.3822	.3799	.3597	56.60	91.22	7.46
13	20	0	28.50	24.12	.6105	.3781	.3866	.3592	55.24	93.83	6.91
14	20	0	27.01	22.86	.6151	.3744	.3929	.3587	53.95	96.07	6.41
15	20	0	25.65	21.71	.6194	.3709	.3988	.3582	52.74	97.95	5.95
16	20	0	24.40	20.65	.6233	.3677	.4044	.3578	51.59	99.54	5.54
17	20	0	23.25	19.68	.6269	.3647	.4096	.3574	50.50	100.86	5.16
18	20	0	22.20	18.79	.6303	.3620	.4145	.3570	49.46	101.94	4.81
19	20	0	21.21	17.96	.6335	.3594	.4191	.3567	48.46	102.82	4.49
20	20	0	20.30	17.18	.6365	.3570	.4235	.3563	47.51	103.52	4.19
22	20	0	18.66	15.79	.6418	.3526	.4316	.3557	45.72	104.44	3.66
24	20	0	17.22	14.57	.6465	.3487	.4390	.3551	44.07	104.86	3.19
26	20	0	15.94	13.50	.6507	.3452	.4457	.3546	42.52	104.87	2.78
28	20	0	14.81	12.53	.6545	.3420	.4518	.3541	41.07	104.56	2.42
30	20	0	13.79	11.67	.6579	.3391	.4574	.3536	39.71	104.00	2.10
32	20	0	12.87	10.89	.6610	.3364	.4626	.3532	38.42	103.23	1.82
34	20	0	12.04	10.19	.6638	.3340	.4675	.3528	37.19	102.29	1.56
36	20	0	11.28	9.544	.6664	.3317	.4720	.3524	36.03	101.22	1.33
38	20	0	10.58	8.957	.6688	.3295	.4763	.3520	34.92	100.03	1.12
40	20	0	9.947	8.419	.6710	.3275	.4803	.3517	33.86	98.76	.93
45	20	0	8.569	7.253	.6759	.3230	.4894	.3508	31.39	95.28	.53
50	20	0	7.435	6.293	.6801	.3192	.4974	.3501	29.16	91.52	.21
55	20	0	6.491	5.494	.6838	.3157	.5045	.3494	27.11	87.62	-.04
60	20	0	5.696	4.821	.6869	.3127	.5109	.3488	25.23	83.63	-.24
65	20	0	5.021	4.250	.6898	.3099	.5167	.3483	23.49	79.63	-.39
70	20	0	4.444	3.761	.6923	.3075	.5219	.3478	21.88	75.65	-.51
75	20	0	3.947	3.340	.6945	.3053	.5267	.3473	20.37	71.72	-.60
80	20	0	3.517	2.976	.6966	.3032	.5312	.3468	18.96	67.85	-.67
90	20	0	2.816	2.383	.7002	.2997	.5391	.3461	16.39	60.34	-.74
100	20	0	2.277	1.927	.7032	.2966	.5459	.3454	14.11	53.18	-.76

ILLUMINANT A

R	Y	B	T(IN)	T	1931 X	1931 Y	1960 U	1960 V	1964 W*	1964 U*	1964 V*
0	30	0	70.01	64.41	0.5022	0.4772	0.2601	0.3708	83.21	4.52	22.97
1	30	0	62.86	53.20	.5148	.4661	.2722	.3697	77.03	16.33	20.21
2	30	0	56.81	48.08	.5267	.4555	.2842	.3687	73.91	27.18	18.40
3	30	0	51.64	43.71	.5379	.4457	.2959	.3677	71.07	36.88	16.77
4	30	0	47.21	39.96	.5482	.4366	.3070	.3668	68.47	45.47	15.31
5	30	0	43.38	36.71	.5578	.4282	.3177	.3658	66.09	53.05	14.00
6	30	0	40.04	33.89	.5666	.4206	.3278	.3650	63.90	59.71	12.82
7	30	0	37.12	31.42	.5747	.4135	.3374	.3642	61.89	65.54	11.77
8	30	0	34.55	29.25	.5821	.4071	.3464	.3634	60.02	70.61	10.82
9	30	0	32.28	27.32	.5888	.4012	.3549	.3627	58.30	75.01	9.97
10	30	0	30.25	25.61	.5951	.3958	.3629	.3620	56.69	78.82	9.20
11	30	0	28.44	24.07	.6008	.3908	.3704	.3614	55.18	82.10	8.50
12	30	0	26.81	22.69	.6060	.3863	.3774	.3608	53.78	84.92	7.87
13	30	0	25.33	21.44	.6108	.3821	.3840	.3603	52.45	87.33	7.30
14	30	0	23.99	20.31	.6153	.3782	.3902	.3597	51.21	89.37	6.78
15	30	0	22.77	19.27	.6194	.3746	.3960	.3593	50.03	91.09	6.31
16	30	0	21.65	18.33	.6232	.3713	.4015	.3588	48.91	92.54	5.87
17	30	0	20.62	17.45	.6267	.3682	.4066	.3584	47.85	93.73	5.47
18	30	0	19.67	16.65	.6300	.3654	.4115	.3579	46.84	94.71	5.11
19	30	0	18.79	15.90	.6331	.3627	.4161	.3576	45.87	95.50	4.77
20	30	0	17.97	15.21	.6359	.3602	.4204	.3572	44.94	96.11	4.45
22	30	0	16.50	13.96	.6411	.3556	.4285	.3565	43.20	96.91	3.89
24	30	0	15.21	12.87	.6457	.3515	.4358	.3559	41.59	97.23	3.40
26	30	0	14.06	11.90	.6498	.3478	.4424	.3553	40.08	97.18	2.98
28	30	0	13.05	11.04	.6534	.3445	.4486	.3547	38.67	96.84	2.60
30	30	0	12.14	10.27	.6568	.3415	.4542	.3542	37.34	96.25	2.26
32	30	0	11.31	9.576	.6598	.3387	.4594	.3537	36.09	95.48	1.96
34	30	0	10.57	8.947	.6626	.3361	.4643	.3533	34.90	94.55	1.70
36	30	0	9.894	8.374	.6652	.3337	.4689	.3529	33.77	93.49	1.46
38	30	0	9.276	7.851	.6675	.3315	.4732	.3525	32.69	92.33	1.24
40	30	0	8.710	7.373	.6698	.3294	.4773	.3521	31.66	91.09	1.04
45	30	0	7.487	6.337	.6747	.3247	.4865	.3512	29.26	87.71	.63
50	30	0	6.483	5.488	.6789	.3207	.4946	.3504	27.10	84.08	.31
55	30	0	5.649	4.781	.6826	.3171	.5019	.3497	25.12	80.31	.06
60	30	0	4.948	4.188	.6858	.3139	.5084	.3491	23.30	76.47	-.14
65	30	0	4.355	3.686	.6887	.3111	.5143	.3485	21.62	72.61	-.29
70	30	0	3.848	3.257	.6913	.3086	.5197	.3480	20.06	68.78	-.41
75	30	0	3.413	2.889	.6936	.3062	.5247	.3475	18.61	65.00	-.50
80	30	0	3.037	2.571	.6957	.3042	.5292	.3470	17.25	61.27	-.56
90	30	0	2.426	2.053	.6994	.3005	.5373	.3462	14.78	54.05	-.64
100	30	0	1.958	1.657	.7026	.2973	.5443	.3455	12.58	47.17	-.66

ILLUMINANT A

R	Y	B	T(IN)	T	1931 X	1931 Y	1960 U	1960 V	1964 W*	1964 U*	1964 V*
0	40	0	62.71	57.69	0.5032	0.4808	0.2593	0.3716	79.60	3.47	22.81
1	40	0	56.29	47.65	.5156	.4697	.2712	.3706	73.63	14.57	20.10
2	40	0	50.87	43.05	.5273	.4592	.2829	.3695	70.62	24.75	18.34
3	40	0	46.23	39.13	.5382	.4494	.2943	.3685	67.87	33.83	16.75
4	40	0	42.25	35.76	.5484	.4403	.3052	.3676	65.36	41.87	15.32
5	40	0	38.80	32.84	.5577	.4319	.3157	.3667	63.06	48.96	14.03
6	40	0	35.80	30.30	.5663	.4242	.3256	.3658	60.94	55.18	12.88
7	40	0	33.18	28.08	.5742	.4171	.3350	.3650	58.99	60.61	11.84
8	40	0	30.87	26.13	.5815	.4106	.3438	.3642	57.18	65.34	10.90
9	40	0	28.82	24.39	.5881	.4047	.3522	.3635	55.50	69.45	10.05
10	40	0	26.99	22.85	.5942	.3992	.3600	.3628	53.94	72.99	9.29
11	40	0	25.36	21.47	.5998	.3942	.3674	.3622	52.48	76.04	8.60
12	40	0	23.89	20.22	.6050	.3896	.3743	.3616	51.11	78.66	7.97
13	40	0	22.56	19.10	.6097	.3853	.3808	.3610	49.82	80.89	7.40
14	40	0	21.36	18.08	.6141	.3814	.3869	.3604	48.61	82.78	6.88
15	40	0	20.26	17.14	.6181	.3777	.3927	.3599	47.46	84.37	6.41
16	40	0	19.25	16.29	.6219	.3743	.3981	.3595	46.37	85.70	5.97
17	40	0	18.32	15.50	.6253	.3712	.4032	.3590	45.34	86.80	5.57
18	40	0	17.46	14.78	.6286	.3683	.4080	.3586	44.35	87.70	5.20
19	40	0	16.67	14.11	.6316	.3655	.4126	.3582	43.41	88.41	4.86
20	40	0	15.93	13.49	.6344	.3629	.4169	.3578	42.51	88.97	4.55
22	40	0	14.61	12.36	.6395	.3582	.4250	.3571	40.81	89.67	3.98
24	40	0	13.45	11.38	.6441	.3540	.4323	.3564	39.24	89.93	3.49
26	40	0	12.42	10.51	.6481	.3502	.4389	.3558	37.77	89.85	3.06
28	40	0	11.51	9.743	.6518	.3468	.4451	.3552	36.40	89.48	2.68
30	40	0	10.69	9.052	.6551	.3437	.4508	.3547	35.10	88.90	2.34
32	40	0	9.959	8.430	.6582	.3408	.4560	.3542	33.88	88.13	2.04
34	40	0	9.294	7.867	.6610	.3381	.4610	.3537	32.72	87.21	1.77
36	40	0	8.690	7.356	.6636	.3357	.4656	.3533	31.62	86.18	1.53
38	40	0	8.140	6.889	.6660	.3333	.4700	.3529	30.57	85.06	1.31
40	40	0	7.636	6.463	.6682	.3312	.4741	.3525	29.57	83.85	1.12
45	40	0	6.548	5.543	.6732	.3263	.4835	.3516	27.24	80.58	.71
50	40	0	5.658	4.789	.6775	.3221	.4918	.3507	25.14	77.07	.39
55	40	0	4.920	4.165	.6813	.3185	.4992	.3500	23.22	73.43	.14
60	40	0	4.302	3.641	.6846	.3152	.5059	.3494	21.46	69.73	-.05
65	40	0	3.780	3.199	.6875	.3123	.5119	.3488	19.84	66.01	-.20
70	40	0	3.335	2.823	.6902	.3096	.5175	.3482	18.33	62.32	-.32
75	40	0	2.954	2.500	.6926	.3073	.5225	.3477	16.93	58.67	-.41
80	40	0	2.625	2.222	.6948	.3051	.5272	.3473	15.62	55.08	-.47
90	40	0	2.091	1.770	.6986	.3013	.5355	.3464	13.24	48.13	-.54
100	40	0	1.684	1.425	.7019	.2980	.5427	.3457	11.13	41.51	-.56

ILLUMINANT A

R	Y	B	T(IN)	T	-----1931---- X	Y	----1960----- U	V	-------1964-------- W*	U*	V*
0	60	0	50.61	46.56	0.5025	0.4863	0.2567	0.3726	72.94	.71	21.85
1	60	0	45.42	38.45	.5144	.4754	.2680	.3716	67.38	10.60	19.30
2	60	0	41.03	34.72	.5257	.4650	.2793	.3706	64.56	19.57	17.66
3	60	0	37.27	31.54	.5362	.4554	.2902	.3696	61.99	27.58	16.17
4	60	0	34.03	28.80	.5460	.4464	.3006	.3687	59.63	34.65	14.83
5	60	0	31.23	26.43	.5551	.4381	.3107	.3678	57.47	40.88	13.62
6	60	0	28.79	24.36	.5634	.4304	.3202	.3669	55.48	46.34	12.53
7	60	0	26.65	22.55	.5711	.4233	.3292	.3661	53.63	51.11	11.54
8	60	0	24.76	20.96	.5781	.4168	.3378	.3653	51.93	55.25	10.65
9	60	0	23.09	19.54	.5846	.4109	.3459	.3646	50.34	58.84	9.85
10	60	0	21.60	18.28	.5905	.4053	.3535	.3639	48.86	61.94	9.12
11	60	0	20.27	17.16	.5960	.4003	.3606	.3633	47.48	64.61	8.46
12	60	0	19.07	16.14	.6011	.3956	.3674	.3626	46.18	66.89	7.86
13	60	0	17.98	15.22	.6057	.3912	.3737	.3621	44.96	68.84	7.31
14	60	0	17.00	14.39	.6100	.3872	.3797	.3615	43.80	70.48	6.81
15	60	0	16.10	13.63	.6140	.3835	.3854	.3610	42.71	71.87	6.35
16	60	0	15.27	12.93	.6177	.3800	.3907	.3605	41.68	73.02	5.93
17	60	0	14.52	12.29	.6212	.3767	.3958	.3600	40.69	73.96	5.54
18	60	0	13.82	11.70	.6244	.3737	.4005	.3596	39.75	74.73	5.18
19	60	0	13.17	11.15	.6274	.3709	.4051	.3592	38.85	75.34	4.85
20	60	0	12.58	10.64	.6302	.3682	.4094	.3588	37.99	75.80	4.54
22	60	0	11.50	9.732	.6354	.3633	.4174	.3580	36.38	76.37	3.99
24	60	0	10.56	8.936	.6400	.3589	.4248	.3573	34.88	76.55	3.51
26	60	0	9.728	8.233	.6441	.3549	.4315	.3567	33.48	76.42	3.09
28	60	0	8.991	7.610	.6478	.3513	.4377	.3561	32.17	76.04	2.72
30	60	0	8.333	7.053	.6513	.3480	.4435	.3555	30.94	75.46	2.39
32	60	0	7.742	6.553	.6544	.3450	.4489	.3550	29.78	74.72	2.10
34	60	0	7.209	6.102	.6573	.3421	.4540	.3545	28.68	73.85	1.84
36	60	0	6.726	5.693	.6600	.3395	.4587	.3540	27.64	72.87	1.60
38	60	0	6.286	5.321	.6625	.3371	.4632	.3536	26.64	71.81	1.39
40	60	0	5.885	4.981	.6648	.3348	.4675	.3532	25.70	70.67	1.21
45	60	0	5.023	4.252	.6700	.3297	.4772	.3522	23.50	67.60	.81
50	60	0	4.321	3.658	.6745	.3252	.4859	.3514	21.52	64.32	.50
55	60	0	3.743	3.168	.6785	.3213	.4936	.3506	19.72	60.91	.27
60	60	0	3.260	2.759	.6820	.3178	.5006	.3499	18.06	57.45	.08
65	60	0	2.854	2.416	.6851	.3147	.5069	.3493	16.54	53.99	-.06
70	60	0	2.510	2.125	.6880	.3119	.5128	.3487	15.14	50.54	-.17
75	60	0	2.216	1.876	.6905	.3093	.5181	.3482	13.83	47.14	-.25
80	60	0	1.964	1.662	.6928	.3070	.5230	.3477	12.62	43.80	-.31
90	60	0	1.557	1.318	.6969	.3030	.5318	.3468	10.41	37.33	-.37
100	60	0	1.248	1.056	.7004	.2995	.5394	.3460	8.46	31.18	-.39

ILLUMINANT A

R	Y	B	T(IN)	T	1931 X	1931 Y	1960 U	1960 V	1964 W*	1964 U*	1964 V*
0	100	0	33.55	30.87	0.4970	0.4956	0.2500	0.3739	61.42	-4.77	19.42
1	100	0	30.09	25.47	.5081	.4853	.2603	.3729	56.55	3.21	17.19
2	100	0	27.15	22.98	.5186	.4754	.2706	.3720	54.07	10.28	15.78
3	100	0	24.63	20.84	.5285	.4661	.2805	.3711	51.80	16.55	14.51
4	100	0	22.45	19.00	.5378	.4575	.2901	.3702	49.71	22.10	13.35
5	100	0	20.56	17.40	.5463	.4494	.2994	.3694	47.79	26.98	12.30
6	100	0	18.91	16.01	.5543	.4419	.3082	.3685	46.01	31.25	11.36
7	100	0	17.47	14.78	.5616	.4349	.3166	.3678	44.36	34.98	10.50
8	100	0	16.19	13.70	.5684	.4285	.3246	.3670	42.82	38.22	9.72
9	100	0	15.06	12.74	.5747	.4225	.3322	.3663	41.39	41.02	9.02
10	100	0	14.05	11.89	.5805	.4170	.3393	.3656	40.06	43.43	8.37
11	100	0	13.14	11.12	.5859	.4119	.3462	.3650	38.81	45.51	7.79
12	100	0	12.33	10.44	.5909	.4071	.3526	.3644	37.63	47.29	7.25
13	100	0	11.59	9.812	.5955	.4027	.3587	.3638	36.52	48.80	6.77
14	100	0	10.93	9.247	.5998	.3985	.3645	.3633	35.47	50.07	6.32
15	100	0	10.32	8.732	.6039	.3947	.3700	.3627	34.48	51.13	5.90
16	100	0	9.760	8.261	.6076	.3910	.3752	.3622	33.54	52.01	5.53
17	100	0	9.249	7.828	.6111	.3877	.3802	.3618	32.64	52.72	5.18
18	100	0	8.778	7.430	.6144	.3845	.3849	.3613	31.78	53.30	4.85
19	100	0	8.344	7.062	.6175	.3815	.3895	.3609	30.96	53.74	4.55
20	100	0	7.942	6.722	.6204	.3786	.3938	.3604	30.18	54.08	4.27
22	100	0	7.220	6.111	.6258	.3734	.4018	.3597	28.71	54.45	3.77
24	100	0	6.592	5.580	.6306	.3687	.4093	.3589	27.34	54.51	3.33
26	100	0	6.042	5.114	.6350	.3644	.4162	.3583	26.07	54.32	2.95
28	100	0	5.555	4.702	.6390	.3605	.4226	.3576	24.88	53.91	2.61
30	100	0	5.123	4.336	.6426	.3569	.4286	.3570	23.77	53.35	2.31
32	100	0	4.737	4.009	.6460	.3536	.4342	.3565	22.71	52.65	2.05
34	100	0	4.390	3.715	.6491	.3505	.4396	.3560	21.72	51.85	1.81
36	100	0	4.077	3.451	.6520	.3476	.4446	.3555	20.78	50.95	1.60
38	100	0	3.794	3.211	.6548	.3449	.4493	.3550	19.88	49.99	1.41
40	100	0	3.537	2.993	.6573	.3423	.4538	.3545	19.03	48.96	1.24
45	100	0	2.988	2.529	.6631	.3366	.4642	.3535	17.06	46.21	.88
50	100	0	2.547	2.156	.6681	.3316	.4735	.3526	15.30	43.27	.60
55	100	0	2.187	1.851	.6725	.3273	.4819	.3518	13.70	40.24	.39
60	100	0	1.890	1.600	.6764	.3234	.4895	.3510	12.24	37.16	.23
65	100	0	1.643	1.390	.6800	.3198	.4965	.3503	10.90	34.09	.11
70	100	0	1.435	1.214	.6831	.3167	.5028	.3497	9.67	31.04	.02
75	100	0	1.259	1.065	.6860	.3138	.5087	.3491	8.53	28.04	-.05
80	100	0	1.109	0.9384	.6886	.3112	.5141	.3485			
90	100	0	0.8695	0.7359	.6932	.3066	.5239	.3476			
100	100	0	0.6903	0.5843	.6971	.3027	.5323	.3467			

ILLUMINANT A

R	Y	B	T(IN)	T	1931 X	1931 Y	1960 U	1960 V	1964 W*	1964 U*	1964 V*
0	0	0	100.0	100.0	0.4476	0.4075	0.2559	0.3496	99.04	0.00	0.00
0	0	1	82.61	76.01	.4301	.4020	.2470	.3464	88.90	-10.28	-3.70
0	0	2	68.49	63.01	.4119	.3947	.2383	.3426	82.48	-18.87	-7.46
0	0	3	56.99	52.43	.3933	.3857	.2299	.3382	76.57	-25.90	-11.26
0	0	4	47.58	43.78	.3744	.3750	.2218	.3333	71.11	-31.52	-15.05
0	0	5	39.88	36.69	.3555	.3626	.2142	.3277	66.07	-35.88	-18.81
0	0	6	33.55	30.86	.3369	.3488	.2070	.3214	61.42	-39.09	-22.50
0	0	7	28.32	26.06	.3188	.3336	.2003	.3144	57.12	-41.30	-26.07
0	0	8	24.00	22.08	.3014	.3174	.1942	.3069	53.14	-42.62	-29.48
0	0	9	20.42	18.79	.2849	.3005	.1888	.2987	49.46	-43.16	-32.69
0	0	10	17.44	16.04	.2695	.2832	.1840	.2900	46.05	-43.06	-35.66
0	0	12	12.86	11.84	.2424	.2484	.1764	.2712	39.97	-41.31	-40.74
0	0	14	9.639	8.868	.2203	.2151	.1715	.2510	34.75	-38.15	-44.50
0	0	16	7.338	6.751	.2031	.1847	.1689	.2304	30.25	-34.23	-46.86
0	0	18	5.676	5.222	.1901	.1581	.1683	.2100	26.37	-30.03	-47.85
0	0	20	4.462	4.105	.1805	.1354	.1694	.1905	23.03	-25.91	-47.62
0	0	25	2.622	2.412	.1669	.0938	.1761	.1485	16.53	-17.16	-43.20
0	0	30	1.696	1.560	.1616	.0686	.1847	.1176	12.00	-11.11	-36.17
0	0	40	0.9011	0.8290	.1599	.0439	.1994	.0821			
0	0	50	0.5926	0.5452	.1610	.0335	.2091	.0653			
0	1	0	98.66	90.77	.4570	.4199	.2566	.3536	95.35	.77	5.01
0	1	1	81.48	68.96	.4405	.4163	.2477	.3511	85.52	-9.20	1.71
0	1	2	67.52	57.15	.4234	.4113	.2389	.3481	79.30	-17.53	-1.48
0	1	3	56.15	47.52	.4058	.4046	.2304	.3446	73.55	-24.38	-4.69
0	1	4	46.86	39.66	.3877	.3962	.2222	.3406	68.26	-29.90	-7.92
0	1	5	39.24	33.22	.3696	.3861	.2144	.3360	63.36	-34.20	-11.13
0	1	6	32.99	27.92	.3514	.3745	.2070	.3309	58.84	-37.43	-14.30
0	1	7	27.83	23.55	.3336	.3613	.2001	.3251	54.66	-39.70	-17.39
0	1	8	23.56	19.94	.3162	.3469	.1937	.3187	50.79	-41.12	-20.37
0	1	9	20.02	16.95	.2995	.3314	.1878	.3117	47.21	-41.80	-23.21
0	1	10	17.08	14.45	.2836	.3150	.1826	.3042	43.90	-41.85	-25.87
0	1	12	12.56	10.63	.2551	.2811	.1740	.2877	37.98	-40.44	-30.56
0	1	14	9.383	7.942	.2311	.2472	.1680	.2695	32.88	-37.61	-34.22
0	1	16	7.115	6.022	.2119	.2152	.1643	.2503	28.48	-33.94	-36.74
0	1	18	5.479	4.637	.1969	.1862	.1627	.2308	24.69	-29.91	-38.11
0	1	20	4.285	3.627	.1857	.1608	.1629	.2117	21.41	-25.88	-38.38
0	1	25	2.481	2.100	.1691	.1128	.1685	.1685	15.01	-17.06	-35.33
0	1	30	1.578	1.335	.1624	.0826	.1771	.1352	10.53	-10.79	-29.34
0	1	40	0.8107	0.6862	.1597	.0524	.1931	.0949			
0	1	50	0.5193	0.4396	.1610	.0396	.2042	.0754			

ILLUMINANT A

R	Y	B	T(IN)	T	1931 X	1931 Y	1960 U	1960 V	1964 W*	1964 U*	1964 V*
0	2	0	97.37	89.58	0.4642	0.4292	0.2571	0.3566	94.86	1.43	8.65
0	2	1	80.38	68.04	.4487	.4273	.2482	.3546	85.06	-8.53	5.57
0	2	2	66.59	56.36	.4325	.4240	.2395	.3522	78.85	-16.85	2.72
0	2	3	55.35	46.85	.4157	.4192	.2310	.3494	73.12	-23.72	-.15
0	2	4	46.17	39.08	.3985	.4129	.2227	.3461	67.84	-29.28	-3.04
0	2	5	38.65	32.71	.3811	.4049	.2148	.3423	62.95	-33.67	-5.92
0	2	6	32.46	27.48	.3635	.3952	.2073	.3380	58.44	-36.98	-8.77
0	2	7	27.36	23.16	.3461	.3840	.2001	.3332	54.26	-39.35	-11.57
0	2	8	23.15	19.59	.3289	.3714	.1935	.3277	50.40	-40.90	-14.29
0	2	9	19.66	16.64	.3123	.3575	.1874	.3218	46.82	-41.71	-16.90
0	2	10	16.75	14.18	.2963	.3424	.1819	.3153	43.50	-41.89	-19.38
0	2	12	12.29	10.40	.2669	.3102	.1725	.3008	37.58	-40.75	-23.84
0	2	14	9.154	7.748	.2417	.2768	.1656	.2845	32.47	-38.14	-27.48
0	2	16	6.919	5.856	.2208	.2441	.1610	.2669	28.06	-34.64	-30.16
0	2	18	5.307	4.492	.2043	.2135	.1586	.2486	24.25	-30.70	-31.84
0	2	20	4.133	3.498	.1915	.1860	.1580	.2301	20.95	-26.68	-32.53
0	2	25	2.362	1.999	.1721	.1321	.1623	.1869	14.49	-17.65	-30.64
0	2	30	1.480	1.253	.1638	.0971	.1707	.1519	9.95	-11.03	-25.57
0	2	40	0.7383	0.6249	.1602	.0613	.1877	.1076			
0	2	50	0.4620	0.3910	.1615	.0461	.2001	.0856			
0	3	0	96.12	88.43	.4699	.4364	.2576	.3588	94.38	2.00	11.38
0	3	1	79.33	67.14	.4552	.4358	.2487	.3573	84.61	-7.93	8.47
0	3	2	65.69	55.60	.4398	.4340	.2400	.3553	78.42	-16.22	5.89
0	3	3	54.58	46.20	.4238	.4308	.2315	.3530	72.71	-23.09	3.28
0	3	4	45.51	38.52	.4074	.4262	.2232	.3503	67.43	-28.67	.67
0	3	5	38.07	32.23	.3906	.4200	.2153	.3472	62.56	-33.07	-1.95
0	3	6	31.96	27.05	.3737	.4122	.2076	.3435	58.05	-36.45	-4.54
0	3	7	26.93	22.79	.3568	.4028	.2004	.3394	53.88	-38.89	-7.09
0	3	8	22.76	19.27	.3400	.3919	.1936	.3348	50.02	-40.51	-9.58
0	3	9	19.31	16.35	.3235	.3796	.1873	.3297	46.45	-41.42	-11.99
0	3	10	16.44	13.92	.3076	.3660	.1816	.3241	43.13	-41.70	-14.29
0	3	12	12.04	10.19	.2779	.3360	.1717	.3113	37.20	-40.76	-18.50
0	3	14	8.946	7.572	.2518	.3037	.1640	.2967	32.09	-38.34	-22.03
0	3	16	6.742	5.706	.2298	.2710	.1587	.2807	27.67	-34.99	-24.77
0	3	18	5.155	4.363	.2119	.2396	.1555	.2637	23.85	-31.15	-26.62
0	3	20	3.999	3.384	.1978	.2105	.1542	.2462	20.53	-27.16	-27.60
0	3	25	2.260	1.913	.1757	.1518	.1572	.2037	14.03	-18.01	-26.60
0	3	30	1.397	1.183	.1658	.1122	.1652	.1677	9.44	-11.13	-22.32
0	3	40	0.6788	0.5746	.1613	.0706	.1830	.1202			
0	3	50	0.4158	0.3519	.1627	.0528	.1967	.0957			

ILLUMINANT A

R	Y	B	T(IN)	T	1931 X	1931 Y	1960 U	1960 V	1964 W*	1964 U*	1964 V*
0	4	0	94.90	87.30	0.4745	0.4421	0.2580	0.3606	93.91	2.48	13.48
0	4	1	78.30	66.27	.4604	.4426	.2492	.3593	84.17	-7.39	10.71
0	4	2	64.82	54.87	.4457	.4420	.2405	.3578	78.00	-15.64	8.33
0	4	3	53.84	45.57	.4305	.4402	.2320	.3559	72.30	-22.48	5.94
0	4	4	44.88	37.98	.4147	.4370	.2237	.3536	67.04	-28.05	3.54
0	4	5	37.53	31.76	.3986	.4323	.2158	.3510	62.17	-32.47	1.15
0	4	6	31.49	26.65	.3823	.4261	.2081	.3479	57.68	-35.87	-1.23
0	4	7	26.51	22.44	.3659	.4184	.2008	.3444	53.52	-38.36	-3.58
0	4	8	22.40	18.96	.3496	.4091	.1939	.3404	49.66	-40.04	-5.88
0	4	9	18.99	16.07	.3335	.3984	.1875	.3360	46.09	-41.00	-8.11
0	4	10	16.15	13.67	.3177	.3863	.1816	.3311	42.78	-41.36	-10.25
0	4	12	11.81	9.996	.2881	.3588	.1712	.3199	36.85	-40.58	-14.21
0	4	14	8.755	7.410	.2615	.3280	.1631	.3069	31.74	-38.31	-17.61
0	4	16	6.581	5.570	.2386	.2959	.1571	.2923	27.32	-35.09	-20.32
0	4	18	5.016	4.246	.2196	.2642	.1533	.2766	23.48	-31.34	-22.27
0	4	20	3.878	3.283	.2044	.2342	.1513	.2601	20.16	-27.40	-23.43
0	4	25	2.170	1.837	.1799	.1714	.1532	.2190	13.62	-18.19	-23.12
0	4	30	1.326	1.122	.1685	.1276	.1607	.1825	8.98	-11.12	-19.50
0	4	40	0.6289	0.5323	.1629	.0803	.1792	.1324			
0	4	50	0.3778	0.3198	.1645	.0598	.1942	.1059			
0	5	0	93.71	86.21	.4782	.4468	.2583	.3620	93.44	2.90	15.14
0	5	1	77.30	65.43	.4647	.4481	.2496	.3610	83.74	-6.91	12.46
0	5	2	63.98	54.15	.4506	.4485	.2410	.3597	77.58	-15.11	10.26
0	5	3	53.13	44.97	.4360	.4478	.2325	.3582	71.90	-21.92	8.04
0	5	4	44.26	37.46	.4209	.4458	.2242	.3563	66.65	-27.46	5.82
0	5	5	37.00	31.32	.4054	.4425	.2163	.3540	61.80	-31.88	3.60
0	5	6	31.03	26.27	.3897	.4377	.2086	.3514	57.32	-35.29	1.39
0	5	7	26.12	22.10	.3738	.4315	.2012	.3484	53.16	-37.80	-.78
0	5	8	22.05	18.66	.3579	.4237	.1943	.3450	49.32	-39.51	-2.92
0	5	9	18.68	15.81	.3422	.4144	.1878	.3412	45.75	-40.52	-5.00
0	5	10	15.88	13.44	.3268	.4038	.1818	.3369	42.44	-40.93	-7.00
0	5	12	11.59	9.812	.2973	.3787	.1711	.3270	36.52	-40.27	-10.73
0	5	14	8.577	7.259	.2705	.3499	.1626	.3153	31.41	-38.12	-13.98
0	5	16	6.432	5.444	.2471	.3188	.1561	.3021	26.98	-35.01	-16.63
0	5	18	4.890	4.139	.2273	.2873	.1517	.2877	23.14	-31.35	-18.62
0	5	20	3.770	3.191	.2112	.2568	.1493	.2723	19.80	-27.46	-19.90
0	5	25	2.090	1.769	.1845	.1909	.1500	.2327	13.24	-18.23	-20.10
0	5	30	1.264	1.070	.1717	.1432	.1570	.1964	8.57	-11.02	-17.06
0	5	40	0.5863	0.4962	.1652	.0903	.1761	.1443			
0	5	50	0.3460	0.2928	.1669	.0671	.1924	.1160			

ILLUMINANT A

R	Y	B	T(IN)	T	1931 X	1931 Y	1960 U	1960 V	1964 W*	1964 U*	1964 V*
0	6	0	92.55	85.14	0.4814	0.4506	0.2586	0.3632	92.98	3.27	16.46
0	6	1	76.33	64.61	.4684	.4527	.2500	.3624	83.32	-6.48	13.87
0	6	2	63.16	53.46	.4548	.4539	.2414	.3613	77.18	-14.62	11.80
0	6	3	52.43	44.38	.4407	.4541	.2329	.3600	71.51	-21.38	9.72
0	6	4	43.67	36.96	.4261	.4531	.2247	.3584	66.28	-26.90	7.65
0	6	5	36.49	30.89	.4112	.4509	.2167	.3565	61.44	-31.30	5.57
0	6	6	30.59	25.90	.3960	.4474	.2091	.3543	56.96	-34.70	3.51
0	6	7	25.74	21.78	.3807	.4424	.2017	.3517	52.82	-37.22	1.48
0	6	8	21.72	18.38	.3653	.4360	.1948	.3487	48.98	-38.95	-.52
0	6	9	18.39	15.57	.3500	.4281	.1882	.3454	45.42	-39.99	-2.47
0	6	10	15.62	13.22	.3349	.4188	.1821	.3416	42.12	-40.44	-4.35
0	6	12	11.39	9.638	.3058	.3963	.1712	.3328	36.20	-39.87	-7.87
0	6	14	8.410	7.118	.2791	.3694	.1624	.3224	31.09	-37.82	-10.97
0	6	16	6.294	5.327	.2553	.3397	.1555	.3104	26.66	-34.80	-13.56
0	6	18	4.774	4.041	.2350	.3089	.1507	.2972	22.82	-31.22	-15.54
0	6	20	3.670	3.106	.2181	.2783	.1478	.2828	19.48	-27.38	-16.89
0	6	25	2.018	1.708	.1896	.2100	.1475	.2451	12.88	-18.16	-17.50
0	6	30	1.209	1.023	.1754	.1588	.1540	.2092	8.19	-10.85	-14.94
0	6	40	0.5495	0.4651	.1681	.1005	.1737	.1559			
0	6	50	0.3190	0.2700	.1700	.0746	.1913	.1260			
0	8	0	90.30	83.08	.4863	.4565	.2592	.3649	92.09	3.85	18.40
0	8	1	74.45	63.02	.4740	.4596	.2506	.3644	82.48	-5.76	15.95
0	8	2	61.58	52.12	.4613	.4621	.2421	.3637	76.39	-13.76	14.08
0	8	3	51.10	43.25	.4481	.4638	.2337	.3628	70.75	-20.42	12.22
0	8	4	42.53	36.00	.4345	.4645	.2256	.3617	65.55	-25.86	10.36
0	8	5	35.52	30.06	.4206	.4641	.2177	.3603	60.74	-30.20	8.51
0	8	6	29.76	25.19	.4064	.4626	.2100	.3587	56.28	-33.58	6.67
0	8	7	25.01	21.17	.3919	.4598	.2027	.3567	52.16	-36.08	4.86
0	8	8	21.09	17.85	.3774	.4556	.1958	.3545	48.34	-37.82	3.08
0	8	9	17.84	15.10	.3629	.4501	.1891	.3519	44.79	-38.89	1.34
0	8	10	15.14	12.81	.3486	.4432	.1830	.3489	41.50	-39.38	-.35
0	8	12	11.01	9.315	.3206	.4253	.1719	.3420	35.60	-38.92	-3.52
0	8	14	8.103	6.859	.2944	.4026	.1626	.3335	30.50	-37.01	-6.36
0	8	16	6.043	5.115	.2706	.3761	.1552	.3237	26.07	-34.14	-8.78
0	8	18	4.564	3.863	.2496	.3472	.1498	.3125	22.23	-30.67	-10.72
0	8	20	3.492	2.956	.2319	.3174	.1462	.3001	18.88	-26.94	-12.13
0	8	25	1.893	1.602	.2005	.2467	.1443	.2662	12.25	-17.79	-13.27
0	8	30	1.115	0.9434	.1842	.1899	.1500	.2321			
0	8	40	0.4888	0.4137	.1754	.1216	.1708	.1776			
0	8	50	0.2757	0.2333	.1781	.0903	.1912	.1454			

ILLUMINANT A

R	Y	B	T(IN)	T	-----1931---- X	Y	----1960----- U	V	-------1964-------- W*	U*	V*
0	10	0	88.14	81.09	0.4899	0.4608	0.2595	0.3662	91.21	4.28	19.73
0	10	1	72.65	61.49	.4783	.4647	.2511	.3659	81.68	-5.18	17.37
0	10	2	60.07	50.84	.4662	.4681	.2427	.3655	75.61	-13.05	15.66
0	10	3	49.82	42.17	.4538	.4708	.2344	.3649	70.02	-19.58	13.94
0	10	4	41.45	35.09	.4409	.4728	.2264	.3641	64.84	-24.93	12.23
0	10	5	34.60	29.29	.4278	.4738	.2185	.3631	60.06	-29.20	10.54
0	10	6	28.97	24.52	.4144	.4737	.2110	.3618	55.63	-32.52	8.86
0	10	7	24.33	20.60	.4008	.4726	.2037	.3603	51.53	-34.99	7.21
0	10	8	20.50	17.35	.3871	.4703	.1968	.3586	47.72	-36.72	5.59
0	10	9	17.33	14.67	.3734	.4667	.1902	.3565	44.19	-37.79	4.01
0	10	10	14.69	12.43	.3597	.4617	.1840	.3542	40.92	-38.29	2.47
0	10	12	10.66	9.019	.3330	.4479	.1728	.3486	35.04	-37.89	-.43
0	10	14	7.826	6.624	.3076	.4291	.1633	.3417	29.95	-36.07	-3.04
0	10	16	5.818	4.924	.2842	.4060	.1556	.3335	25.53	-33.29	-5.31
0	10	18	4.379	3.706	.2633	.3797	.1498	.3241	21.69	-29.92	-7.18
0	10	20	3.337	2.824	.2452	.3515	.1458	.3135	18.34	-26.26	-8.60
0	10	25	1.787	1.512	.2122	.2807	.1428	.2834	11.70	-17.20	-10.07
0	10	30	1.037	0.8775	.1943	.2202	.1479	.2515			
0	10	40	0.4407	0.3730	.1847	.1430	.1699	.1974			
0	10	50	0.2424	0.2052	.1887	.1065	.1935	.1638			
0	15	0	83.07	76.42	.4957	.4677	.2602	.3682	89.09	4.88	21.62
0	15	1	68.43	57.92	.4852	.4729	.2519	.3683	79.73	-4.19	19.41
0	15	2	56.54	47.86	.4743	.4777	.2437	.3682	73.77	-11.70	17.91
0	15	3	46.86	39.66	.4631	.4821	.2357	.3681	68.26	-17.93	16.42
0	15	4	38.95	32.97	.4517	.4859	.2279	.3678	63.17	-23.03	14.95
0	15	5	32.48	27.49	.4400	.4891	.2203	.3673	58.45	-27.10	13.50
0	15	6	27.16	22.99	.4281	.4916	.2129	.3667	54.09	-30.25	12.07
0	15	7	22.78	19.28	.4161	.4932	.2058	.3660	50.04	-32.59	10.67
0	15	8	19.17	16.22	.4040	.4939	.1991	.3650	46.29	-34.23	9.30
0	15	9	16.17	13.69	.3919	.4936	.1926	.3639	42.80	-35.24	7.96
0	15	10	13.69	11.58	.3799	.4922	.1865	.3625	39.57	-35.71	6.66
0	15	12	9.885	8.367	.3562	.4861	.1754	.3591	33.75	-35.33	4.21
0	15	14	7.222	6.113	.3334	.4753	.1659	.3548	28.71	-33.59	1.97
0	15	16	5.337	4.517	.3120	.4599	.1581	.3495	24.33	-30.95	-.01
0	15	18	3.989	3.376	.2924	.4405	.1519	.3432	20.50	-27.73	-1.70
0	15	20	3.015	2.552	.2750	.4177	.1474	.3359	17.16	-24.21	-3.06
0	15	25	1.576	1.334	.2419	.3530	.1433	.3137	10.52	-15.41	-4.91
0	15	30	0.8883	0.7518	.2230	.2892	.1481	.2880			
0	15	40	0.3547	0.3002	.2148	.1960	.1746	.2389			
0	15	50	0.1858	0.1573	.2245	.1481	.2075	.2053			

ILLUMINANT A

R	Y	B	T(IN)	T	1931 X	1931 Y	1960 U	1960 V	1964 W*	1964 U*	1964 V*
0	20	0	78.39	72.12	0.4990	0.4720	0.2604	0.3694	87.06	5.03	22.48
0	20	1	64.55	54.64	.4892	.4778	.2523	.3697	77.86	-3.66	20.35
0	20	2	53.31	45.12	.4791	.4834	.2444	.3698	72.00	-10.82	18.97
0	20	3	44.16	37.38	.4688	.4886	.2366	.3699	66.59	-16.76	17.60
0	20	4	36.69	31.05	.4582	.4935	.2290	.3699	61.58	-21.59	16.26
0	20	5	30.56	25.87	.4475	.4979	.2216	.3697	56.94	-25.44	14.94
0	20	6	25.54	21.62	.4367	.5017	.2144	.3695	52.64	-28.42	13.65
0	20	7	21.40	18.11	.4259	.5050	.2075	.3691	48.66	-30.62	12.38
0	20	8	17.98	15.22	.4149	.5074	.2010	.3686	44.96	-32.13	11.15
0	20	9	15.15	12.83	.4041	.5091	.1947	.3680	41.52	-33.06	9.95
0	20	10	12.81	10.84	.3932	.5099	.1888	.3672	38.33	-33.47	8.78
0	20	12	9.220	7.804	.3720	.5087	.1780	.3651	32.59	-33.02	6.58
0	20	14	6.710	5.679	.3517	.5034	.1687	.3623	27.60	-31.29	4.56
0	20	16	4.936	4.178	.3326	.4938	.1610	.3587	23.26	-28.70	2.76
0	20	18	3.670	3.106	.3151	.4802	.1550	.3543	19.48	-25.56	1.20
0	20	20	2.758	2.334	.2994	.4629	.1505	.3491	16.16	-22.15	-.10
0	20	25	1.416	1.198	.2694	.4078	.1465	.3327	9.55	-13.59	-2.10
0	20	30	0.7803	0.6605	.2529	.3463	.1521	.3125			
0	20	40	0.2972	0.2515	.2510	.2449	.1847	.2703			
0	20	50	0.1502	0.1272	.2700	.1882	.2289	.2393			
0	30	0	70.01	64.41	.5022	.4772	.2601	.3708	83.21	4.52	22.97
0	30	1	57.63	48.77	.4933	.4836	.2524	.3712	74.34	-3.41	20.93
0	30	2	47.57	40.26	.4841	.4899	.2448	.3716	68.68	-9.93	19.66
0	30	3	39.37	33.32	.4749	.4960	.2374	.3719	63.45	-15.30	18.43
0	30	4	32.68	27.66	.4655	.5018	.2301	.3721	58.61	-19.65	17.21
0	30	5	27.20	23.02	.4561	.5074	.2231	.3723	54.12	-23.08	16.02
0	30	6	22.70	19.21	.4467	.5126	.2164	.3724	49.96	-25.70	14.86
0	30	7	19.00	16.08	.4372	.5173	.2099	.3725	46.10	-27.61	13.73
0	30	8	15.94	13.49	.4279	.5216	.2037	.3724	42.51	-28.89	12.63
0	30	9	13.41	11.35	.4186	.5252	.1978	.3723	39.18	-29.62	11.57
0	30	10	11.31	9.570	.4095	.5283	.1922	.3720	36.08	-29.88	10.53
0	30	12	8.104	6.859	.3918	.5323	.1822	.3712	30.50	-29.25	8.59
0	30	14	5.866	4.965	.3752	.5332	.1736	.3699	25.65	-27.47	6.80
0	30	16	4.287	3.628	.3600	.5307	.1665	.3682	21.42	-24.91	5.19
0	30	18	3.163	2.677	.3463	.5247	.1610	.3659	17.71	-21.87	3.77
0	30	20	2.357	1.995	.3343	.5151	.1571	.3631	14.47	-18.59	2.54
0	30	25	1.179	0.9978	.3134	.4773	.1548	.3535			
0	30	30	0.6296	0.5329	.3060	.4259	.1632	.3408			
0	30	40	0.2240	0.1896	.3258	.3216	.2099	.3108			
0	30	50	0.1081	0.0915	.3691	.2539	.2781	.2870			

ILLUMINANT A

R	Y	B	T(IN)	T	-----1931---- X	Y	----1960----- U	V	-------1964-------- W*	U*	V*
0	40	0	62.71	57.69	0.5032	0.4808	0.2593	0.3716	79.60	3.47	22.81
0	40	1	51.60	43.68	.4948	.4874	.2519	.3721	71.04	-3.77	20.82
0	40	2	42.58	36.04	.4863	.4939	.2446	.3726	65.58	-9.70	19.61
0	40	3	35.23	29.82	.4777	.5003	.2374	.3730	60.53	-14.55	18.43
0	40	4	29.23	24.74	.4691	.5065	.2305	.3733	55.85	-18.46	17.27
0	40	5	24.31	20.58	.4605	.5125	.2238	.3737	51.51	-21.51	16.15
0	40	6	20.28	17.16	.4519	.5182	.2174	.3739	47.49	-23.81	15.05
0	40	7	16.95	14.35	.4433	.5236	.2112	.3741	43.75	-25.44	13.99
0	40	8	14.21	12.03	.4349	.5285	.2053	.3743	40.28	-26.49	12.95
0	40	9	11.94	10.11	.4267	.5331	.1998	.3744	37.05	-27.05	11.95
0	40	10	10.06	8.512	.4187	.5371	.1946	.3744	34.05	-27.17	10.99
0	40	12	7.186	6.082	.4033	.5434	.1851	.3742	28.63	-26.36	9.16
0	40	14	5.182	4.386	.3893	.5473	.1772	.3736	23.92	-24.50	7.48
0	40	16	3.771	3.192	.3767	.5482	.1707	.3727	19.81	-21.94	5.96
0	40	18	2.768	2.343	.3658	.5461	.1658	.3714	16.21	-18.98	4.61
0	40	20	2.050	1.736	.3568	.5409	.1626	.3698	13.04	-15.82	3.42
0	40	25	1.007	0.8527	.3440	.5142	.1622	.3637			
0	40	30	0.5263	0.4455	.3459	.4713	.1737	.3551			
0	40	40	0.1787	0.1513	.3886	.3696	.2335	.3331			
0	40	50	0.0839	0.0710	.4545	.2952	.3227	.3144			
0	60	0	50.61	46.56	.5025	.4863	.2567	.3726	72.94	.71	21.85
0	60	1	41.66	35.26	.4948	.4929	.2497	.3732	64.98	-5.26	19.94
0	60	2	34.37	29.09	.4870	.4995	.2429	.3737	59.89	-10.15	18.79
0	60	3	28.44	24.07	.4792	.5060	.2363	.3742	55.18	-14.11	17.67
0	60	4	23.58	19.96	.4715	.5123	.2299	.3747	50.82	-17.23	16.58
0	60	5	19.61	16.59	.4638	.5185	.2237	.3751	46.77	-19.61	15.52
0	60	6	16.34	13.83	.4563	.5245	.2178	.3755	43.01	-21.35	14.49
0	60	7	13.65	11.55	.4489	.5302	.2121	.3758	39.52	-22.51	13.49
0	60	8	11.43	9.673	.4417	.5356	.2068	.3761	36.27	-23.18	12.53
0	60	9	9.591	8.118	.4347	.5406	.2018	.3764	33.24	-23.42	11.59
0	60	10	8.067	6.828	.4280	.5452	.1971	.3766	30.43	-23.29	10.70
0	60	12	5.743	4.861	.4154	.5532	.1887	.3769	25.35	-22.16	9.00
0	60	14	4.123	3.490	.4044	.5591	.1817	.3769	20.92	-20.18	7.44
0	60	16	2.984	2.525	.3950	.5627	.1763	.3767	17.04	-17.64	6.02
0	60	18	2.176	1.842	.3876	.5637	.1725	.3763	13.65	-14.81	4.74
0	60	20	1.600	1.354	.3823	.5621	.1703	.3755	10.66	-11.87	3.60
0	60	25	0.7679	0.6499	.3797	.5456	.1729	.3725			
0	60	30	0.3897	0.3299	.3942	.5115	.1889	.3676			
0	60	40	0.1244	0.1053	.4685	.4123	.2673	.3529			
0	60	50	0.0565	0.0478	.5595	.3282	.3846	.3384			

ILLUMINANT A

R	Y	B	T(IN)	T	1931 X	1931 Y	1960 U	1960 V	1964 W*	1964 U*	1964 V*
0	100	0	33.55	30.87	0.4970	0.4956	0.2500	0.3739	61.42	-4.77	19.42
0	100	1	27.65	23.40	.4900	.5020	.2437	.3744	54.51	-8.68	17.63
0	100	2	22.83	19.33	.4831	.5083	.2376	.3750	50.09	-11.94	16.56
0	100	3	18.91	16.00	.4763	.5146	.2317	.3755	46.00	-14.49	15.51
0	100	4	15.69	13.28	.4696	.5207	.2260	.3760	42.20	-16.40	14.50
0	100	5	13.05	11.04	.4630	.5266	.2206	.3764	38.67	-17.75	13.52
0	100	6	10.87	9.205	.4565	.5323	.2155	.3769	35.39	-18.62	12.57
0	100	7	9.083	7.688	.4503	.5378	.2106	.3773	32.34	-19.06	11.66
0	100	8	7.603	6.435	.4444	.5430	.2060	.3776	29.50	-19.14	10.77
0	100	9	6.376	5.397	.4387	.5479	.2017	.3780	26.85	-18.92	9.92
0	100	10	5.358	4.535	.4333	.5525	.1978	.3783	24.38	-18.43	9.10
0	100	12	3.805	3.220	.4236	.5605	.1908	.3788	19.92	-16.86	7.56
0	100	14	2.721	2.303	.4154	.5667	.1852	.3791	16.01	-14.72	6.15
0	100	16	1.959	1.658	.4090	.5711	.1810	.3792	12.59	-12.26	4.86
0	100	18	1.420	1.202	.4045	.5734	.1784	.3792	9.58	-9.66	3.70
0	100	20	1.037	0.8773	.4023	.5734	.1773	.3791			
0	100	25	0.4857	0.4111	.4077	.5620	.1826	.3777			
0	100	30	0.2389	0.2022	.4312	.5329	.2022	.3747			
0	100	40	0.0709	0.0600	.5279	.4322	.2961	.3637			
0	100	50	0.0310	0.0262	.6314	.3370	.4369	.3497			

TABLE 2.

(For explanation of headings, see text page 6.)

ILLUMINANT C

R	Y	B	T(IN)	T	1931 X	1931 Y	1960 U	1960 V	1964 W*	1964 U*	1964 V*
0	0	0	100.0	100.0	0.3101	0.3163	0.2009	0.3073	99.04	0.00	0.00
1	0	0	88.08	81.03	.3189	.3082	.2105	.3051	91.18	11.41	-2.62
2	0	0	78.06	71.81	.3278	.3010	.2201	.3032	86.91	21.76	-4.62
3	0	0	69.59	64.02	.3368	.2949	.2297	.3017	83.01	31.13	-6.08
4	0	0	62.40	57.41	.3459	.2897	.2392	.3005	79.44	39.61	-7.07
5	0	0	56.26	51.76	.3551	.2853	.2486	.2996	76.17	47.29	-7.65
6	0	0	51.00	46.92	.3643	.2816	.2579	.2990	73.17	54.22	-7.89
7	0	0	46.45	42.74	.3736	.2787	.2670	.2988	70.41	60.49	-7.83
8	0	0	42.52	39.12	.3828	.2764	.2758	.2988	67.86	66.15	-7.54
9	0	0	39.09	35.96	.3921	.2747	.2845	.2990	65.52	71.26	-7.05
10	0	0	36.08	33.19	.4014	.2736	.2930	.2995	63.35	75.87	-6.41
11	0	0	33.43	30.76	.4107	.2729	.3012	.3002	61.33	80.03	-5.65
12	0	0	31.09	28.60	.4199	.2726	.3092	.3011	59.46	83.77	-4.79
13	0	0	29.01	26.69	.4290	.2726	.3170	.3022	57.71	87.15	-3.87
14	0	0	27.15	24.98	.4381	.2730	.3246	.3033	56.08	90.19	-2.91
15	0	0	25.48	23.44	.4471	.2736	.3319	.3046	54.55	92.92	-1.92
16	0	0	23.97	22.05	.4560	.2744	.3390	.3060	53.11	95.37	-.91
17	0	0	22.61	20.80	.4648	.2755	.3459	.3074	51.75	97.56	.08
18	0	0	21.37	19.66	.4735	.2766	.3525	.3089	50.47	99.52	1.07
19	0	0	20.24	18.62	.4821	.2780	.3590	.3105	49.26	101.26	2.03
20	0	0	19.20	17.67	.4904	.2794	.3652	.3121	48.11	102.80	2.96
22	0	0	17.37	15.98	.5067	.2824	.3771	.3152	45.97	105.33	4.71
24	0	0	15.81	14.55	.5223	.2855	.3882	.3183	44.03	107.23	6.29
26	0	0	14.46	13.31	.5370	.2886	.3986	.3213	42.24	108.58	7.69
28	0	0	13.29	12.23	.5509	.2916	.4083	.3242	40.59	109.46	8.89
30	0	0	12.25	11.27	.5640	.2945	.4174	.3268	39.06	109.93	9.92
32	0	0	11.34	10.43	.5762	.2971	.4258	.3293	37.63	110.03	10.76
34	0	0	10.52	9.682	.5875	.2994	.4337	.3316	36.28	109.83	11.45
36	0	0	9.792	9.008	.5979	.3015	.4411	.3336	35.02	109.35	11.99
38	0	0	9.132	8.402	.6075	.3034	.4479	.3355	33.82	108.64	12.39
40	0	0	8.535	7.852	.6163	.3049	.4543	.3372	32.69	107.73	12.68
45	0	0	7.265	6.684	.6351	.3077	.4686	.3405	30.09	104.73	12.98
50	0	0	6.244	5.744	.6499	.3091	.4806	.3428	27.77	101.00	12.83
55	0	0	5.408	4.975	.6614	.3095	.4908	.3444	25.68	96.79	12.39
60	0	0	4.714	4.337	.6705	.3091	.4996	.3455	23.77	92.31	11.79
65	0	0	4.132	3.802	.6775	.3082	.5072	.3461	22.02	87.69	11.09
70	0	0	3.640	3.348	.6831	.3069	.5139	.3464	20.40	83.02	10.35
75	0	0	3.219	2.961	.6876	.3055	.5198	.3464	18.90	78.37	9.62
80	0	0	2.858	2.629	.6912	.3040	.5251	.3464	17.50	73.77	8.89
90	0	0	2.273	2.092	.6968	.3009	.5342	.3461	14.97	64.87	7.54
100	0	0	1.829	1.682	.7009	.2980	.5418	.3456	12.73	56.43	6.33

ILLUMINANT C

R	Y	B	T(IN)	T	1931 X	1931 Y	1960 U	1960 V	1964 W*	1964 U*	1964 V*
0	0	1	84.28	77.54	0.2916	0.2987	0.1943	0.2987	89.61	-7.62	-10.09
1	0	1	74.06	62.68	.2995	.2908	.2033	.2962	82.31	2.66	-11.90
2	0	1	65.47	55.41	.3075	.2839	.2124	.2941	78.31	11.74	-13.47
3	0	1	58.21	49.27	.3157	.2779	.2214	.2923	74.65	19.97	-14.54
4	0	1	52.05	44.05	.3240	.2728	.2304	.2909	71.29	27.41	-15.18
5	0	1	46.80	39.61	.3325	.2685	.2394	.2899	68.22	34.14	-15.44
6	0	1	42.29	35.80	.3411	.2650	.2482	.2892	65.39	40.23	-15.39
7	0	1	38.42	32.52	.3498	.2622	.2569	.2888	62.79	45.73	-15.09
8	0	1	35.06	29.67	.3586	.2601	.2654	.2888	60.40	50.71	-14.57
9	0	1	32.14	27.20	.3674	.2585	.2739	.2890	58.19	55.21	-13.87
10	0	1	29.58	25.04	.3764	.2575	.2821	.2895	56.14	59.29	-13.03
11	0	1	27.34	23.14	.3854	.2569	.2902	.2902	54.24	62.98	-12.09
12	0	1	25.35	21.46	.3944	.2568	.2981	.2911	52.47	66.31	-11.07
13	0	1	23.59	19.97	.4034	.2570	.3058	.2922	50.83	69.33	-9.99
14	0	1	22.02	18.64	.4125	.2576	.3133	.2935	49.29	72.05	-8.87
15	0	1	20.62	17.45	.4215	.2584	.3207	.2949	47.85	74.52	-7.74
16	0	1	19.35	16.38	.4305	.2595	.3278	.2964	46.49	76.73	-6.61
17	0	1	18.21	15.42	.4394	.2607	.3348	.2980	45.22	78.74	-5.48
18	0	1	17.18	14.54	.4483	.2622	.3416	.2997	44.02	80.53	-4.37
19	0	1	16.24	13.74	.4572	.2638	.3482	.3014	42.88	82.14	-3.29
20	0	1	15.38	13.01	.4659	.2655	.3546	.3032	41.81	83.58	-2.24
22	0	1	13.86	11.74	.4830	.2692	.3670	.3068	39.81	85.98	-.25
24	0	1	12.58	10.65	.4996	.2731	.3786	.3105	38.00	87.82	1.55
26	0	1	11.48	9.713	.5156	.2770	.3896	.3140	36.34	89.18	3.16
28	0	1	10.52	8.901	.5308	.2808	.4000	.3174	34.81	90.11	4.57
30	0	1	9.678	8.192	.5452	.2845	.4097	.3206	33.40	90.66	5.78
32	0	1	8.939	7.566	.5588	.2879	.4188	.3237	32.08	90.88	6.81
34	0	1	8.282	7.010	.5715	.2911	.4273	.3264	30.85	90.81	7.67
36	0	1	7.695	6.513	.5834	.2939	.4353	.3290	29.69	90.49	8.37
38	0	1	7.168	6.067	.5943	.2965	.4428	.3313	28.60	89.94	8.92
40	0	1	6.692	5.664	.6045	.2987	.4498	.3334	27.56	89.19	9.35
45	0	1	5.685	4.812	.6262	.3030	.4653	.3377	25.21	86.64	9.95
50	0	1	4.879	4.130	.6434	.3056	.4783	.3408	23.11	83.35	10.05
55	0	1	4.223	3.574	.6568	.3069	.4894	.3429	21.22	79.60	9.83
60	0	1	3.680	3.114	.6672	.3071	.4988	.3444	19.51	75.56	9.40
65	0	1	3.225	2.730	.6754	.3067	.5069	.3453	17.94	71.37	8.85
70	0	1	2.841	2.404	.6817	.3058	.5139	.3458	16.49	67.12	8.25
75	0	1	2.513	2.127	.6867	.3046	.5201	.3460	15.15	62.88	7.62
80	0	1	2.232	1.889	.6908	.3032	.5256	.3461	13.90	58.70	7.01
90	0	1	1.778	1.505	.6968	.3003	.5350	.3458	11.65	50.59	5.83
100	0	1	1.432	1.212	.7011	.2975	.5427	.3454	9.65	42.91	4.78

ILLUMINANT C

R	Y	B	T(IN)	T	1931 X	1931 Y	1960 U	1960 V	1964 W*	1964 U*	1964 V*
0	0	2	71.32	65.62	0.2741	0.2806	0.1884	0.2893	83.83	-13.54	-19.60
1	0	2	62.53	52.93	.2811	.2729	.1969	.2866	76.86	-4.01	-20.69
2	0	2	55.15	46.68	.2883	.2661	.2053	.2843	73.01	4.22	-21.88
3	0	2	48.91	41.40	.2956	.2603	.2138	.2823	69.48	11.66	-22.60
4	0	2	43.62	36.92	.3032	.2553	.2222	.2807	66.24	18.39	-22.92
5	0	2	39.11	33.10	.3109	.2512	.2306	.2795	63.27	24.47	-22.90
6	0	2	35.25	29.84	.3187	.2478	.2390	.2786	60.54	29.98	-22.59
7	0	2	31.93	27.02	.3268	.2451	.2472	.2781	58.02	34.96	-22.03
8	0	2	29.05	24.59	.3349	.2430	.2554	.2779	55.70	39.46	-21.27
9	0	2	26.56	22.48	.3432	.2416	.2634	.2781	53.55	43.56	-20.37
10	0	2	24.38	20.63	.3517	.2406	.2714	.2785	51.57	47.27	-19.33
11	0	2	22.46	19.01	.3602	.2402	.2792	.2792	49.72	50.62	-18.19
12	0	2	20.78	17.58	.3689	.2401	.2869	.2801	48.01	53.68	-16.99
13	0	2	19.28	16.32	.3776	.2405	.2944	.2812	46.41	56.45	-15.74
14	0	2	17.95	15.19	.3864	.2412	.3019	.2825	44.92	58.98	-14.46
15	0	2	16.76	14.19	.3953	.2421	.3091	.2840	43.52	61.26	-13.17
16	0	2	15.70	13.29	.4042	.2434	.3163	.2857	42.21	63.34	-11.88
17	0	2	14.74	12.47	.4132	.2449	.3233	.2874	40.98	65.22	-10.61
18	0	2	13.87	11.74	.4221	.2466	.3301	.2892	39.82	66.92	-9.35
19	0	2	13.08	11.07	.4311	.2484	.3369	.2912	38.72	68.46	-8.13
20	0	2	12.36	10.47	.4400	.2504	.3434	.2932	37.68	69.84	-6.94
22	0	2	11.11	9.401	.4577	.2547	.3561	.2972	35.76	72.19	-4.69
24	0	2	10.04	8.500	.4751	.2592	.3683	.3014	34.02	74.04	-2.63
26	0	2	9.134	7.731	.4920	.2638	.3798	.3055	32.43	75.44	-.78
28	0	2	8.349	7.067	.5084	.2684	.3907	.3095	30.97	76.46	.87
30	0	2	7.665	6.488	.5241	.2729	.4011	.3133	29.63	77.12	2.30
32	0	2	7.065	5.980	.5391	.2772	.4109	.3169	28.38	77.47	3.54
34	0	2	6.534	5.530	.5532	.2812	.4201	.3203	27.21	77.55	4.58
36	0	2	6.061	5.130	.5665	.2849	.4287	.3234	26.12	77.37	5.46
38	0	2	5.639	4.773	.5789	.2882	.4369	.3262	25.09	76.98	6.18
40	0	2	5.258	4.451	.5905	.2912	.4445	.3288	24.12	76.39	6.75
45	0	2	4.457	3.772	.6155	.2972	.4614	.3342	21.92	74.23	7.67
50	0	2	3.820	3.233	.6354	.3013	.4756	.3382	19.97	71.32	8.02
55	0	2	3.303	2.796	.6511	.3036	.4876	.3411	18.22	67.91	7.99
60	0	2	2.877	2.435	.6633	.3047	.4978	.3430	16.63	64.21	7.72
65	0	2	2.521	2.134	.6727	.3048	.5065	.3443	15.19	60.33	7.30
70	0	2	2.221	1.880	.6800	.3043	.5139	.3451	13.86	56.39	6.80
75	0	2	1.966	1.664	.6857	.3034	.5204	.3455	12.62	52.45	6.26
80	0	2	1.747	1.478	.6902	.3023	.5262	.3457	11.48	48.55	5.72
90	0	2	1.393	1.179	.6968	.2996	.5359	.3456	9.41	40.99	4.68
100	0	2	1.124	0.9512	.7014	.2968	.5438	.3452			

ILLUMINANT C

R	Y	B	T(IN)	T	1931 X	1931 Y	1960 U	1960 V	1964 W*	1964 U*	1964 V*
0	0	3	60.59	55.75	0.2580	0.2622	0.1833	0.2794	78.50	-17.97	-28.47
1	0	3	53.02	44.88	.2641	.2547	.1911	.2764	71.84	-9.15	-28.84
2	0	3	46.66	39.49	.2704	.2482	.1989	.2738	68.13	-1.72	-29.65
3	0	3	41.29	34.94	.2769	.2425	.2068	.2716	64.73	4.99	-30.03
4	0	3	36.73	31.09	.2836	.2377	.2147	.2698	61.61	11.05	-30.03
5	0	3	32.85	27.80	.2905	.2336	.2225	.2684	58.74	16.53	-29.71
6	0	3	29.53	24.99	.2976	.2303	.2303	.2674	56.09	21.47	-29.13
7	0	3	26.67	22.57	.3049	.2277	.2381	.2667	53.66	25.95	-28.33
8	0	3	24.20	20.49	.3124	.2257	.2458	.2664	51.40	30.01	-27.35
9	0	3	22.06	18.67	.3200	.2243	.2534	.2664	49.32	33.69	-26.23
10	0	3	20.19	17.09	.3278	.2234	.2610	.2667	47.40	37.03	-25.00
11	0	3	18.55	15.70	.3358	.2230	.2684	.2674	45.61	40.07	-23.70
12	0	3	17.11	14.49	.3440	.2230	.2758	.2682	43.94	42.84	-22.33
13	0	3	15.84	13.41	.3523	.2234	.2832	.2694	42.39	45.35	-20.92
14	0	3	14.71	12.45	.3607	.2242	.2904	.2707	40.94	47.65	-19.49
15	0	3	13.70	11.60	.3692	.2252	.2975	.2722	39.59	49.74	-18.06
16	0	3	12.80	10.83	.3779	.2266	.3046	.2739	38.31	51.65	-16.64
17	0	3	11.98	10.14	.3866	.2282	.3115	.2758	37.12	53.38	-15.23
18	0	3	11.25	9.524	.3955	.2300	.3183	.2777	35.99	54.97	-13.85
19	0	3	10.59	8.963	.4043	.2320	.3251	.2798	34.93	56.40	-12.50
20	0	3	9.987	8.453	.4133	.2342	.3317	.2819	33.93	57.71	-11.19
22	0	3	8.935	7.562	.4312	.2389	.3446	.2864	32.07	59.95	-8.71
24	0	3	8.050	6.814	.4490	.2440	.3571	.2910	30.40	61.74	-6.43
26	0	3	7.298	6.177	.4667	.2492	.3691	.2957	28.87	63.15	-4.36
28	0	3	6.651	5.630	.4840	.2546	.3806	.3003	27.47	64.20	-2.52
30	0	3	6.091	5.155	.5008	.2598	.3916	.3047	26.19	64.93	-.89
32	0	3	5.601	4.741	.5171	.2649	.4020	.3090	25.00	65.37	.53
34	0	3	5.170	4.376	.5326	.2698	.4119	.3130	23.89	65.55	1.75
36	0	3	4.788	4.052	.5473	.2743	.4213	.3167	22.86	65.49	2.79
38	0	3	4.447	3.764	.5612	.2785	.4301	.3202	21.89	65.22	3.66
40	0	3	4.142	3.505	.5742	.2824	.4383	.3233	20.98	64.76	4.37
45	0	3	3.502	2.964	.6028	.2903	.4568	.3300	18.91	62.93	5.58
50	0	3	2.996	2.536	.6260	.2960	.4724	.3351	17.09	60.34	6.17
55	0	3	2.589	2.191	.6442	.2996	.4856	.3387	15.47	57.25	6.32
60	0	3	2.254	1.908	.6584	.3017	.4966	.3413	14.00	53.84	6.19
65	0	3	1.975	1.672	.6694	.3026	.5059	.3430	12.67	50.25	5.88
70	0	3	1.740	1.473	.6778	.3026	.5139	.3441	11.45	46.58	5.48
75	0	3	1.541	1.304	.6844	.3020	.5208	.3448	10.31	42.90	5.03
80	0	3	1.370	1.160	.6895	.3011	.5269	.3452	9.26	39.26	4.56
90	0	3	1.094	0.9262	.6968	.2987	.5369	.3453			
00	0	3	0.8844	0.7486	.7018	.2961	.5451	.3450			

ILLUMINANT C

R	Y	B	T(IN)	T	1931 X	1931 Y	1960 U	1960 V	1964 W*	1964 U*	1964 V*
0	0	4	51.69	47.56	0.2432	0.2439	0.1788	0.2690	73.57	-21.10	-36.64
1	0	4	45.15	38.22	.2485	.2367	.1860	.2658	67.21	-12.96	-36.30
2	0	4	39.66	33.56	.2540	.2303	.1933	.2629	63.64	-6.27	-36.72
3	0	4	35.02	29.64	.2597	.2248	.2006	.2605	60.37	-.23	-36.74
4	0	4	31.08	26.31	.2656	.2202	.2078	.2585	57.35	5.20	-36.42
5	0	4	27.73	23.47	.2717	.2162	.2151	.2568	54.58	10.11	-35.81
6	0	4	24.86	21.04	.2780	.2130	.2224	.2556	52.02	14.54	-34.97
7	0	4	22.40	18.96	.2845	.2105	.2296	.2548	49.66	18.55	-33.93
8	0	4	20.27	17.16	.2912	.2085	.2368	.2543	47.48	22.18	-32.73
9	0	4	18.43	15.60	.2981	.2071	.2440	.2542	45.46	25.47	-31.42
10	0	4	16.82	14.24	.3053	.2062	.2511	.2544	43.59	28.45	-30.01
11	0	4	15.41	13.04	.3126	.2058	.2582	.2549	41.85	31.17	-28.53
12	0	4	14.18	12.00	.3201	.2058	.2652	.2557	40.23	33.64	-27.01
13	0	4	13.08	11.07	.3279	.2062	.2722	.2567	38.73	35.90	-25.47
14	0	4	12.12	10.26	.3358	.2069	.2791	.2580	37.32	37.97	-23.91
15	0	4	11.26	9.527	.3438	.2080	.2860	.2596	36.00	39.85	-22.35
16	0	4	10.49	8.876	.3521	.2094	.2929	.2613	34.76	41.58	-20.81
17	0	4	9.797	8.292	.3604	.2110	.2997	.2632	33.60	43.16	-19.29
18	0	4	9.176	7.766	.3690	.2129	.3064	.2652	32.51	44.60	-17.80
19	0	4	8.615	7.292	.3776	.2150	.3131	.2674	31.48	45.91	-16.35
20	0	4	8.106	6.861	.3864	.2173	.3197	.2696	30.50	47.11	-14.94
22	0	4	7.222	6.112	.4041	.2223	.3327	.2745	28.71	49.20	-12.26
24	0	4	6.481	5.486	.4221	.2277	.3454	.2795	27.09	50.89	-9.79
26	0	4	5.855	4.956	.4401	.2335	.3577	.2846	25.62	52.24	-7.55
28	0	4	5.319	4.502	.4581	.2394	.3697	.2898	24.28	53.28	-5.53
30	0	4	4.858	4.111	.4757	.2453	.3812	.2948	23.05	54.03	-3.74
32	0	4	4.456	3.771	.4930	.2512	.3922	.2997	21.91	54.52	-2.16
34	0	4	4.104	3.473	.5098	.2569	.4028	.3044	20.86	54.76	-.79
36	0	4	3.793	3.211	.5259	.2623	.4128	.3088	19.88	54.78	.39
38	0	4	3.517	2.977	.5412	.2673	.4224	.3129	18.96	54.61	1.39
40	0	4	3.271	2.769	.5557	.2721	.4313	.3168	18.10	54.25	2.22
45	0	4	2.758	2.335	.5881	.2821	.4516	.3249	16.16	52.68	3.70
50	0	4	2.356	1.994	.6147	.2896	.4687	.3312	14.47	50.37	4.50
55	0	4	2.033	1.721	.6359	.2948	.4831	.3359	12.96	47.55	4.82
60	0	4	1.770	1.498	.6525	.2980	.4952	.3392	11.60	44.39	4.81
65	0	4	1.551	1.313	.6653	.2998	.5053	.3415	10.37	41.05	4.61
70	0	4	1.367	1.157	.6752	.3005	.5139	.3430	9.24	37.62	4.29
75	0	4	1.211	1.025	.6827	.3004	.5213	.3440	8.21	34.18	3.91
80	0	4	1.077	0.9118	.6885	.2998	.5276	.3445			
90	0	4	0.8620	0.7296	.6967	.2977	.5381	.3449			
100	0	4	0.6982	0.5910	.7021	.2953	.5465	.3447			

ILLUMINANT C

R	Y	B	T(IN)	T	1931 X	1931 Y	1960 U	1960 V	1964 W*	1964 U*	1964 V*
0	0	5	44.28	40.73	0.2299	0.2261	0.1751	0.2582	69.02	-23.14	-44.06
1	0	5	38.62	32.69	.2344	.2191	.1817	.2547	62.93	-15.65	-43.02
2	0	5	33.86	28.66	.2392	.2130	.1884	.2517	59.50	-9.62	-43.05
3	0	5	29.84	25.26	.2441	.2077	.1951	.2490	56.35	-4.21	-42.72
4	0	5	26.43	22.37	.2492	.2031	.2018	.2468	53.44	.66	-42.07
5	0	5	23.53	19.92	.2545	.1993	.2085	.2449	50.76	5.05	-41.17
6	0	5	21.05	17.81	.2601	.1962	.2152	.2435	48.29	9.00	-40.06
7	0	5	18.91	16.01	.2658	.1936	.2219	.2425	46.01	12.57	-38.79
8	0	5	17.07	14.45	.2718	.1917	.2285	.2418	43.89	15.79	-37.39
9	0	5	15.48	13.10	.2780	.1903	.2352	.2415	41.94	18.72	-35.88
10	0	5	14.09	11.93	.2844	.1894	.2418	.2416	40.12	21.36	-34.29
11	0	5	12.88	10.90	.2910	.1889	.2485	.2419	38.43	23.78	-32.66
12	0	5	11.81	9.997	.2978	.1889	.2551	.2426	36.86	25.97	-31.00
13	0	5	10.87	9.202	.3049	.1892	.2617	.2436	35.39	27.98	-29.32
14	0	5	10.04	8.499	.3122	.1899	.2683	.2448	34.02	29.81	-27.65
15	0	5	9.303	7.874	.3196	.1909	.2749	.2463	32.74	31.49	-25.98
16	0	5	8.644	7.316	.3273	.1923	.2814	.2479	31.53	33.03	-24.34
17	0	5	8.054	6.817	.3352	.1939	.2880	.2498	30.40	34.44	-22.72
18	0	5	7.525	6.369	.3433	.1957	.2945	.2519	29.34	35.72	-21.14
19	0	5	7.047	5.965	.3515	.1978	.3010	.2541	28.34	36.91	-19.60
20	0	5	6.615	5.599	.3599	.2001	.3075	.2565	27.39	37.99	-18.11
22	0	5	5.867	4.966	.3771	.2052	.3204	.2615	25.65	39.88	-15.28
24	0	5	5.244	4.438	.3948	.2108	.3332	.2669	24.08	41.43	-12.67
26	0	5	4.719	3.994	.4129	.2169	.3457	.2724	22.67	42.68	-10.28
28	0	5	4.273	3.617	.4311	.2232	.3580	.2781	21.37	43.66	-8.13
30	0	5	3.890	3.293	.4493	.2297	.3700	.2837	20.19	44.39	-6.20
32	0	5	3.559	3.012	.4673	.2362	.3816	.2892	19.10	44.88	-4.49
34	0	5	3.270	2.767	.4851	.2426	.3927	.2946	18.10	45.14	-3.00
36	0	5	3.016	2.553	.5023	.2488	.4035	.2997	17.17	45.21	-1.70
38	0	5	2.791	2.363	.5190	.2547	.4137	.3045	16.30	45.09	-.59
40	0	5	2.592	2.194	.5349	.2603	.4234	.3090	15.48	44.80	.34
45	0	5	2.179	1.844	.5711	.2725	.4455	.3189	13.66	43.43	2.05
50	0	5	1.858	1.572	.6015	.2820	.4643	.3266	12.07	41.34	3.02
55	0	5	1.601	1.355	.6261	.2890	.4802	.3324	10.67	38.73	3.48
60	0	5	1.393	1.179	.6454	.2936	.4934	.3367	9.41	35.79	3.59
65	0	5	1.221	1.033	.6604	.2964	.5045	.3397	8.27	32.66	3.48
70	0	5	1.076	0.9111	.6719	.2979	.5138	.3417			
75	0	5	0.9542	0.8076	.6806	.2983	.5217	.3430			
80	0	5	0.8497	0.7192	.6873	.2981	.5285	.3438			
90	0	5	0.6814	0.5767	.6966	.2965	.5395	.3445			
100	0	5	0.5533	0.4683	.7025	.2943	.5481	.3444			

ILLUMINANT C

R	Y	B	T(IN)	T	1931 X	1931 Y	1960 U	1960 V	1964 W*	1964 U*	1964 V*
0	0	6	38.08	35.04	0.2181	0.2088	0.1721	0.2471	64.81	-24.25	-50.71
1	0	6	33.17	28.08	.2219	.2021	.1782	.2434	58.98	-17.37	-48.98
2	0	6	29.04	24.58	.2260	.1963	.1843	.2402	55.69	-11.96	-48.62
3	0	6	25.55	21.63	.2302	.1912	.1905	.2373	52.65	-7.11	-47.93
4	0	6	22.59	19.12	.2346	.1868	.1966	.2349	49.85	-2.76	-46.96
5	0	6	20.07	16.99	.2392	.1831	.2027	.2328	47.27	1.16	-45.77
6	0	6	17.91	15.16	.2440	.1801	.2089	.2312	44.88	4.67	-44.41
7	0	6	16.06	13.59	.2490	.1776	.2150	.2300	42.67	7.84	-42.90
8	0	6	14.46	12.24	.2542	.1756	.2211	.2291	40.62	10.70	-41.29
9	0	6	13.08	11.07	.2597	.1742	.2272	.2287	38.72	13.28	-39.59
10	0	6	11.88	10.05	.2653	.1732	.2334	.2285	36.95	15.62	-37.85
11	0	6	10.82	9.162	.2712	.1727	.2395	.2287	35.31	17.74	-36.07
12	0	6	9.902	8.381	.2774	.1726	.2457	.2293	33.78	19.68	-34.27
13	0	6	9.090	7.694	.2837	.1728	.2518	.2301	32.35	21.44	-32.48
14	0	6	8.372	7.086	.2903	.1734	.2580	.2312	31.02	23.05	-30.69
15	0	6	7.736	6.547	.2971	.1743	.2642	.2326	29.77	24.52	-28.93
16	0	6	7.169	6.068	.3042	.1756	.2705	.2342	28.60	25.87	-27.20
17	0	6	6.662	5.639	.3114	.1771	.2767	.2360	27.50	27.11	-25.50
18	0	6	6.208	5.254	.3189	.1788	.2830	.2380	26.46	28.24	-23.85
19	0	6	5.799	4.909	.3266	.1808	.2892	.2402	25.49	29.29	-22.24
20	0	6	5.431	4.596	.3345	.1830	.2955	.2426	24.57	30.24	-20.68
22	0	6	4.794	4.057	.3509	.1880	.3082	.2477	22.87	31.91	-17.73
24	0	6	4.266	3.611	.3680	.1937	.3208	.2533	21.35	33.29	-15.00
26	0	6	3.824	3.236	.3856	.1999	.3333	.2592	19.98	34.41	-12.51
28	0	6	3.449	2.920	.4037	.2064	.3458	.2652	18.73	35.29	-10.25
30	0	6	3.130	2.649	.4220	.2132	.3581	.2714	17.59	35.95	-8.22
32	0	6	2.855	2.416	.4405	.2202	.3701	.2775	16.55	36.40	-6.42
34	0	6	2.616	2.214	.4589	.2271	.3818	.2835	15.58	36.66	-4.83
36	0	6	2.407	2.038	.4771	.2340	.3932	.2893	14.69	36.73	-3.45
38	0	6	2.224	1.882	.4949	.2407	.4041	.2948	13.87	36.64	-2.26
40	0	6	2.061	1.745	.5121	.2471	.4146	.3000	13.10	36.38	-1.24
45	0	6	1.727	1.462	.5519	.2615	.4385	.3117	11.37	35.13	.64
50	0	6	1.469	1.244	.5862	.2732	.4592	.3210	9.88	33.19	1.76
55	0	6	1.265	1.071	.6145	.2821	.4767	.3282	8.58	30.75	2.33
60	0	6	1.100	0.9310	.6370	.2883	.4913	.3336			
65	0	6	0.9640	0.8160	.6545	.2924	.5035	.3374			
70	0	6	0.8505	0.7199	.6679	.2948	.5136	.3400			
75	0	6	0.7545	0.6386	.6781	.2959	.5222	.3418			
80	0	6	0.6725	0.5692	.6859	.2962	.5294	.3429			
90	0	6	0.5406	0.4576	.6964	.2951	.5410	.3439			
100	0	6	0.4403	0.3726	.7029	.2932	.5500	.3441			

ILLUMINANT C

R	Y	B	T(IN)	T	1931 X	1931 Y	1960 U	1960 V	1964 W*	1964 U*	1964 V*
0	0	7	32.89	30.26	0.2077	0.1924	0.1698	0.2359	60.91	-24.61	-56.56
1	0	7	28.62	24.23	.2109	.1860	.1754	.2320	55.34	-18.32	-54.17
2	0	7	25.03	21.18	.2144	.1804	.1810	.2286	52.17	-13.46	-53.41
3	0	7	21.99	18.61	.2179	.1756	.1866	.2255	49.25	-9.11	-52.36
4	0	7	19.41	16.43	.2217	.1714	.1922	.2229	46.55	-5.23	-51.08
5	0	7	17.21	14.57	.2256	.1678	.1978	.2207	44.06	-1.74	-49.61
6	0	7	15.33	12.98	.2298	.1649	.2034	.2189	41.75	1.38	-47.99
7	0	7	13.72	11.61	.2341	.1624	.2090	.2175	39.61	4.18	-46.26
8	0	7	12.33	10.43	.2386	.1605	.2146	.2165	37.63	6.71	-44.44
9	0	7	11.12	9.412	.2434	.1590	.2202	.2158	35.78	8.98	-42.57
10	0	7	10.07	8.525	.2483	.1580	.2258	.2155	34.07	11.04	-40.67
11	0	7	9.157	7.750	.2535	.1574	.2314	.2155	32.47	12.91	-38.75
12	0	7	8.355	7.071	.2589	.1572	.2371	.2159	30.99	14.60	-36.83
13	0	7	7.649	6.474	.2646	.1573	.2428	.2165	29.59	16.14	-34.92
14	0	7	7.027	5.947	.2704	.1578	.2485	.2175	28.29	17.54	-33.04
15	0	7	6.475	5.480	.2765	.1585	.2543	.2187	27.08	18.82	-31.19
16	0	7	5.984	5.065	.2829	.1596	.2601	.2202	25.93	19.98	-29.38
17	0	7	5.547	4.695	.2895	.1610	.2660	.2219	24.86	21.06	-27.61
18	0	7	5.155	4.363	.2963	.1626	.2719	.2238	23.85	22.04	-25.89
19	0	7	4.803	4.065	.3034	.1644	.2779	.2259	22.90	22.94	-24.23
20	0	7	4.486	3.797	.3107	.1665	.2839	.2282	22.00	23.76	-22.62
22	0	7	3.941	3.336	.3259	.1713	.2961	.2334	20.35	25.20	-19.57
24	0	7	3.491	2.955	.3421	.1767	.3084	.2390	18.87	26.39	-16.76
26	0	7	3.116	2.637	.3590	.1828	.3208	.2451	17.54	27.36	-14.19
28	0	7	2.800	2.370	.3766	.1894	.3333	.2514	16.33	28.11	-11.86
30	0	7	2.531	2.143	.3947	.1964	.3457	.2580	15.23	28.68	-9.77
32	0	7	2.302	1.948	.4132	.2035	.3580	.2646	14.22	29.06	-7.90
34	0	7	2.103	1.780	.4319	.2109	.3702	.2711	13.30	29.27	-6.25
36	0	7	1.930	1.634	.4506	.2183	.3820	.2776	12.45	29.31	-4.81
38	0	7	1.779	1.506	.4692	.2256	.3936	.2838	11.66	29.20	-3.56
40	0	7	1.646	1.393	.4875	.2327	.4048	.2898	10.92	28.95	-2.49
45	0	7	1.374	1.163	.5306	.2492	.4307	.3033	9.29	27.75	-.48
50	0	7	1.166	0.9871	.5688	.2631	.4533	.3145			
55	0	7	1.003	0.8489	.6010	.2740	.4726	.3232			
60	0	7	0.8716	0.7378	.6270	.2821	.4888	.3298			
65	0	7	0.7641	0.6467	.6474	.2876	.5023	.3346			
70	0	7	0.6745	0.5709	.6631	.2911	.5134	.3380			
75	0	7	0.5989	0.5069	.6750	.2930	.5227	.3403			
80	0	7	0.5344	0.4523	.6840	.2939	.5304	.3418			
90	0	7	0.4309	0.3647	.6961	.2935	.5427	.3433			
100	0	7	0.3520	0.2980	.7033	.2919	.5520	.3437			

ILLUMINANT C

R	Y	B	T(IN)	T	1931 X	1931 Y	1960 U	1960 V	1964 W*	1964 U*	1964 V*
0	0	8	28.53	26.25	0.1986	0.1769	0.1681	0.2246	57.30	-24.38	-61.61
1	0	8	24.81	21.00	.2014	.1709	.1733	.2206	51.97	-18.62	-58.58
2	0	8	21.67	18.34	.2043	.1656	.1784	.2170	48.93	-14.26	-57.44
3	0	8	19.02	16.09	.2073	.1610	.1835	.2138	46.12	-10.38	-56.05
4	0	8	16.76	14.19	.2105	.1570	.1887	.2111	43.52	-6.91	-54.46
5	0	8	14.84	12.56	.2138	.1536	.1937	.2087	41.12	-3.81	-52.71
6	0	8	13.20	11.17	.2174	.1507	.1988	.2067	38.89	-1.04	-50.84
7	0	8	11.79	9.976	.2211	.1483	.2039	.2052	36.82	1.44	-48.89
8	0	8	10.57	8.945	.2250	.1464	.2089	.2040	34.90	3.67	-46.88
9	0	8	9.513	8.052	.2291	.1449	.2140	.2031	33.11	5.67	-44.84
10	0	8	8.596	7.276	.2334	.1439	.2191	.2026	31.44	7.47	-42.79
11	0	8	7.796	6.599	.2379	.1432	.2243	.2025	29.89	9.10	-40.73
12	0	8	7.096	6.006	.2426	.1428	.2294	.2027	28.44	10.57	-38.70
13	0	8	6.480	5.485	.2475	.1429	.2347	.2031	27.09	11.90	-36.68
14	0	8	5.937	5.025	.2527	.1432	.2399	.2039	25.82	13.12	-34.71
15	0	8	5.457	4.619	.2581	.1438	.2453	.2050	24.63	14.22	-32.78
16	0	8	5.030	4.257	.2637	.1447	.2507	.2063	23.52	15.22	-30.90
17	0	8	4.650	3.936	.2696	.1458	.2561	.2078	22.47	16.14	-29.07
18	0	8	4.310	3.648	.2758	.1473	.2616	.2096	21.49	16.98	-27.30
19	0	8	4.005	3.390	.2821	.1489	.2672	.2116	20.56	17.74	-25.58
20	0	8	3.732	3.158	.2888	.1508	.2729	.2138	19.68	18.44	-23.93
22	0	8	3.262	2.761	.3028	.1552	.2845	.2188	18.07	19.65	-20.80
24	0	8	2.875	2.434	.3177	.1604	.2964	.2243	16.63	20.64	-17.94
26	0	8	2.555	2.162	.3337	.1662	.3084	.2304	15.33	21.44	-15.32
28	0	8	2.286	1.935	.3504	.1726	.3207	.2370	14.15	22.05	-12.95
30	0	8	2.059	1.743	.3679	.1795	.3331	.2437	13.09	22.50	-10.81
32	0	8	1.866	1.579	.3861	.1867	.3456	.2507	12.11	22.79	-8.91
34	0	8	1.700	1.439	.4047	.1943	.3580	.2578	11.22	22.92	-7.23
36	0	8	1.556	1.317	.4236	.2019	.3703	.2648	10.40	22.91	-5.75
38	0	8	1.430	1.211	.4426	.2097	.3823	.2717	9.65	22.76	-4.47
40	0	8	1.321	1.118	.4616	.2173	.3941	.2783	8.94	22.48	-3.37
45	0	8	1.098	0.9293	.5076	.2356	.4219	.2938			
50	0	8	0.9296	0.7868	.5495	.2517	.4466	.3068			
55	0	8	0.7983	0.6757	.5856	.2648	.4679	.3173			
60	0	8	0.6935	0.5870	.6154	.2748	.4859	.3254			
65	0	8	0.6081	0.5147	.6391	.2819	.5007	.3314			
70	0	8	0.5372	0.4547	.6574	.2867	.5130	.3356			
75	0	8	0.4775	0.4041	.6713	.2896	.5231	.3386			
80	0	8	0.4267	0.3611	.6818	.2912	.5316	.3405			
90	0	8	0.3451	0.2921	.6956	.2917	.5446	.3426			
100	0	8	0.2830	0.2396	.7037	.2904	.5543	.3432			

ILLUMINANT C

R	Y	B	T(IN)	T	1931 X	1931 Y	1960 U	1960 V	1964 W*	1964 U*	1964 V*
0	0	9	24.85	22.86	0.1908	0.1625	0.1671	0.2134	53.96	-23.69	-65.86
1	0	9	21.60	18.28	.1931	.1568	.1718	.2093	48.86	-18.44	-62.24
2	0	9	18.85	15.96	.1956	.1519	.1765	.2056	45.94	-14.53	-60.72
3	0	9	16.53	13.99	.1981	.1475	.1812	.2023	43.24	-11.05	-59.00
4	0	9	14.55	12.32	.2008	.1437	.1858	.1995	40.74	-7.96	-57.11
5	0	9	12.87	10.89	.2037	.1404	.1904	.1970	38.42	-5.21	-55.10
6	0	9	11.43	9.670	.2067	.1377	.1950	.1949	36.26	-2.75	-53.00
7	0	9	10.19	8.621	.2098	.1354	.1996	.1932	34.26	-.56	-50.84
8	0	9	9.116	7.716	.2132	.1335	.2042	.1918	32.40	1.40	-48.65
9	0	9	8.190	6.932	.2167	.1320	.2088	.1908	30.67	3.16	-46.44
10	0	9	7.385	6.251	.2203	.1309	.2134	.1902	29.05	4.74	-44.25
11	0	9	6.682	5.656	.2242	.1301	.2181	.1898	27.54	6.16	-42.07
12	0	9	6.068	5.136	.2283	.1297	.2227	.1898	26.13	7.43	-39.92
13	0	9	5.528	4.679	.2326	.1296	.2275	.1901	24.81	8.59	-37.81
14	0	9	5.052	4.276	.2371	.1298	.2323	.1907	23.58	9.63	-35.75
15	0	9	4.632	3.920	.2418	.1302	.2372	.1915	22.42	10.58	-33.75
16	0	9	4.258	3.604	.2468	.1309	.2421	.1926	21.33	11.44	-31.80
17	0	9	3.926	3.323	.2520	.1319	.2471	.1940	20.31	12.21	-29.91
18	0	9	3.630	3.072	.2574	.1331	.2522	.1956	19.34	12.92	-28.09
19	0	9	3.365	2.848	.2631	.1345	.2574	.1974	18.44	13.56	-26.33
20	0	9	3.126	2.646	.2690	.1362	.2627	.1995	17.58	14.14	-24.64
22	0	9	2.719	2.301	.2817	.1401	.2736	.2042	16.01	15.13	-21.46
24	0	9	2.385	2.019	.2954	.1449	.2848	.2096	14.60	15.94	-18.55
26	0	9	2.109	1.785	.3100	.1503	.2965	.2156	13.33	16.56	-15.90
28	0	9	1.879	1.591	.3257	.1564	.3084	.2221	12.18	17.03	-13.50
30	0	9	1.686	1.427	.3423	.1630	.3206	.2290	11.15	17.35	-11.35
32	0	9	1.522	1.288	.3598	.1701	.3330	.2362	10.20	17.52	-9.44
34	0	9	1.382	1.170	.3779	.1776	.3455	.2436	9.34	17.56	-7.74
36	0	9	1.261	1.067	.3967	.1854	.3580	.2510	8.55	17.47	-6.26
38	0	9	1.157	0.9789	.4158	.1934	.3705	.2585			
40	0	9	1.065	0.9016	.4351	.2014	.3828	.2658			
45	0	9	0.8818	0.7463	.4831	.2211	.4123	.2830			
50	0	9	0.7445	0.6301	.5283	.2391	.4391	.2981			
55	0	9	0.6385	0.5404	.5684	.2544	.4625	.3105			
60	0	9	0.5544	0.4693	.6022	.2665	.4824	.3202			
65	0	9	0.4862	0.4116	.6294	.2754	.4989	.3275			
70	0	9	0.4299	0.3639	.6507	.2817	.5125	.3328			
75	0	9	0.3827	0.3239	.6669	.2857	.5236	.3365			
80	0	9	0.3425	0.2899	.6791	.2881	.5327	.3390			
90	0	9	0.2781	0.2354	.6950	.2896	.5467	.3417			
100	0	9	0.2290	0.1938	.7041	.2888	.5569	.3426			

ILLUMINANT C

R	Y	B	T(IN)	T	1931 X	1931 Y	1960 U	1960 V	1964 W*	1964 U*	1964 V*
0	0	10	21.74	20.00	0.1842	0.1492	0.1666	0.2024	50.86	-22.65	-69.37
1	0	10	18.89	15.99	.1861	.1439	.1710	.1983	45.98	-17.88	-65.18
2	0	10	16.48	13.95	.1881	.1392	.1752	.1945	43.18	-14.38	-63.31
3	0	10	14.44	12.22	.1903	.1351	.1795	.1912	40.58	-11.27	-61.27
4	0	10	12.70	10.75	.1926	.1315	.1837	.1882	38.17	-8.52	-59.10
5	0	10	11.22	9.494	.1950	.1284	.1879	.1856	35.94	-6.07	-56.84
6	0	10	9.947	8.419	.1975	.1258	.1920	.1835	33.86	-3.89	-54.52
7	0	10	8.855	7.495	.2002	.1236	.1962	.1816	31.92	-1.95	-52.17
8	0	10	7.912	6.697	.2030	.1217	.2003	.1801	30.12	-.22	-49.80
9	0	10	7.096	6.006	.2060	.1203	.2044	.1790	28.44	1.32	-47.45
10	0	10	6.386	5.405	.2092	.1191	.2086	.1782	26.87	2.70	-45.11
11	0	10	5.767	4.881	.2125	.1183	.2128	.1777	25.41	3.94	-42.82
12	0	10	5.225	4.423	.2160	.1178	.2170	.1775	24.04	5.05	-40.57
13	0	10	4.750	4.020	.2197	.1175	.2213	.1776	22.75	6.05	-38.37
14	0	10	4.331	3.666	.2236	.1176	.2256	.1780	21.55	6.94	-36.23
15	0	10	3.960	3.352	.2277	.1179	.2301	.1786	20.41	7.75	-34.15
16	0	10	3.632	3.074	.2320	.1184	.2346	.1795	19.35	8.48	-32.14
17	0	10	3.340	2.827	.2366	.1192	.2391	.1807	18.35	9.13	-30.21
18	0	10	3.080	2.607	.2413	.1202	.2438	.1821	17.41	9.72	-28.34
19	0	10	2.848	2.410	.2463	.1214	.2486	.1837	16.52	10.25	-26.54
20	0	10	2.640	2.234	.2516	.1228	.2534	.1856	15.68	10.72	-24.82
22	0	10	2.284	1.933	.2629	.1263	.2635	.1899	14.14	11.52	-21.58
24	0	10	1.993	1.687	.2752	.1305	.2741	.1950	12.76	12.15	-18.63
26	0	10	1.755	1.485	.2885	.1355	.2851	.2008	11.52	12.62	-15.96
28	0	10	1.556	1.317	.3030	.1411	.2965	.2071	10.40	12.94	-13.55
30	0	10	1.390	1.177	.3185	.1473	.3083	.2140	9.39	13.13	-11.40
32	0	10	1.250	1.058	.3349	.1541	.3205	.2212	8.47	13.18	-9.48
34	0	10	1.131	0.9572	.3523	.1614	.3330	.2288			
36	0	10	1.029	0.8708	.3705	.1691	.3456	.2366			
38	0	10	0.9409	0.7963	.3893	.1771	.3583	.2444			
40	0	10	0.8644	0.7316	.4086	.1852	.3710	.2523			
45	0	10	0.7122	0.6028	.4578	.2059	.4020	.2712			
50	0	10	0.5995	0.5074	.5057	.2256	.4308	.2882			
55	0	10	0.5133	0.4345	.5495	.2429	.4564	.3026			
60	0	10	0.4456	0.3771	.5873	.2571	.4784	.3142			
65	0	10	0.3909	0.3309	.6184	.2681	.4967	.3230			
70	0	10	0.3460	0.2929	.6429	.2759	.5117	.3294			
75	0	10	0.3084	0.2611	.6617	.2812	.5240	.3340			
80	0	10	0.2766	0.2341	.6758	.2845	.5340	.3372			
90	0	10	0.2255	0.1909	.6942	.2872	.5490	.3407			
100	0	10	0.1866	0.1579	.7044	.2870	.5596	.3420			

ILLUMINANT C

R	Y	B	T(IN)	T	1931 X	1931 Y	1960 U	1960 V	1964 W*	1964 U*	1964 V*
0	0	12	16.85	15.51	0.1738	0.1258	0.1670	0.1813	45.34	-19.96	-74.26
1	0	12	14.64	12.39	.1751	.1212	.1707	.1772	40.85	-16.04	-69.09
2	0	12	12.77	10.81	.1766	.1172	.1743	.1735	38.28	-13.23	-66.59
3	0	12	11.18	9.463	.1781	.1136	.1778	.1701	35.88	-10.75	-63.98
4	0	12	9.825	8.316	.1798	.1105	.1813	.1672	33.65	-8.57	-61.31
5	0	12	8.665	7.334	.1815	.1078	.1847	.1645	31.57	-6.63	-58.61
6	0	12	7.670	6.492	.1833	.1054	.1881	.1622	29.64	-4.92	-55.90
7	0	12	6.813	5.767	.1852	.1034	.1915	.1602	27.83	-3.40	-53.21
8	0	12	6.073	5.140	.1873	.1016	.1948	.1586	26.14	-2.06	-50.55
9	0	12	5.430	4.596	.1894	.1002	.1982	.1572	24.57	-.86	-47.93
10	0	12	4.872	4.123	.1917	.0991	.2015	.1562	23.09	.19	-45.36
11	0	12	4.384	3.711	.1941	.0982	.2049	.1554	21.70	1.13	-42.86
12	0	12	3.958	3.350	.1967	.0975	.2083	.1549	20.41	1.97	-40.42
13	0	12	3.583	3.033	.1994	.0971	.2117	.1547	19.19	2.71	-38.06
14	0	12	3.253	2.753	.2023	.0969	.2152	.1547	18.04	3.37	-35.78
15	0	12	2.962	2.507	.2053	.0970	.2188	.1550	16.96	3.96	-33.58
16	0	12	2.704	2.289	.2085	.0972	.2225	.1555	15.95	4.48	-31.47
17	0	12	2.475	2.095	.2119	.0976	.2262	.1563	14.99	4.94	-29.43
18	0	12	2.271	1.923	.2155	.0982	.2300	.1572	14.09	5.34	-27.48
19	0	12	2.090	1.769	.2193	.0990	.2340	.1584	13.23	5.69	-25.61
20	0	12	1.927	1.631	.2233	.1000	.2380	.1598	12.43	6.00	-23.83
22	0	12	1.651	1.397	.2320	.1025	.2465	.1633	10.95	6.49	-20.50
24	0	12	1.427	1.208	.2417	.1057	.2554	.1675	9.62	6.83	-17.48
26	0	12	1.244	1.053	.2524	.1096	.2650	.1725	8.43	7.03	-14.77
28	0	12	1.093	0.9249	.2642	.1141	.2751	.1782			
30	0	12	0.9676	0.8190	.2771	.1193	.2858	.1846			
32	0	12	0.8629	0.7304	.2911	.1251	.2971	.1915			
34	0	12	0.7747	0.6557	.3063	.1315	.3089	.1990			
36	0	12	0.7000	0.5924	.3226	.1385	.3212	.2069			
38	0	12	0.6361	0.5384	.3399	.1460	.3339	.2151			
40	0	12	0.5813	0.4920	.3582	.1539	.3469	.2236			
45	0	12	0.4738	0.4010	.4071	.1751	.3799	.2450			
50	0	12	0.3962	0.3354	.4581	.1968	.4122	.2656			
55	0	12	0.3382	0.2862	.5079	.2176	.4422	.2841			
60	0	12	0.2933	0.2483	.5534	.2358	.4686	.2996			
65	0	12	0.2577	0.2181	.5923	.2508	.4911	.3119			
70	0	12	0.2287	0.1935	.6241	.2622	.5096	.3212			
75	0	12	0.2046	0.1731	.6489	.2705	.5246	.3280			
80	0	12	0.1842	0.1559	.6677	.2761	.5366	.3328			
90	0	12	0.1517	0.1284	.6919	.2816	.5540	.3383			
00	0	12	0.1269	0.1074	.7050	.2829	.5657	.3405			

ILLUMINANT C

R	Y	B	T(IN)	T	1931 X	1931 Y	1960 U	1960 V	1964 W*	1964 U*	1964 V*
0	0	14	13.29	12.23	0.1665	0.1065	0.1688	0.1619	40.60	-16.92	-76.72
1	0	14	11.56	9.783	.1675	.1026	.1719	.1580	36.47	-13.72	-70.77
2	0	14	10.09	8.536	.1685	.0992	.1749	.1545	34.09	-11.49	-67.75
3	0	14	8.831	7.475	.1696	.0962	.1779	.1512	31.88	-9.52	-64.69
4	0	14	7.759	6.567	.1708	.0935	.1808	.1483	29.82	-7.78	-61.62
5	0	14	6.840	5.789	.1721	.0911	.1836	.1458	27.89	-6.26	-58.57
6	0	14	6.049	5.120	.1734	.0890	.1864	.1435	26.09	-4.91	-55.56
7	0	14	5.366	4.542	.1748	.0872	.1891	.1415	24.40	-3.72	-52.60
8	0	14	4.775	4.042	.1763	.0856	.1919	.1398	22.82	-2.67	-49.70
9	0	14	4.262	3.607	.1778	.0843	.1946	.1384	21.34	-1.75	-46.88
10	0	14	3.815	3.229	.1795	.0832	.1973	.1372	19.95	-.94	-44.13
11	0	14	3.424	2.898	.1812	.0823	.2000	.1362	18.64	-.21	-41.47
12	0	14	3.082	2.609	.1831	.0816	.2027	.1355	17.42	.42	-38.89
13	0	14	2.782	2.354	.1851	.0811	.2055	.1351	16.26	.98	-36.41
14	0	14	2.517	2.130	.1872	.0808	.2083	.1348	15.17	1.47	-34.02
15	0	14	2.283	1.933	.1894	.0806	.2112	.1348	14.14	1.89	-31.72
16	0	14	2.077	1.758	.1918	.0806	.2141	.1350	13.17	2.27	-29.51
17	0	14	1.893	1.602	.1943	.0808	.2171	.1353	12.25	2.59	-27.40
18	0	14	1.730	1.464	.1970	.0811	.2202	.1359	11.39	2.86	-25.37
19	0	14	1.585	1.341	.1999	.0815	.2234	.1367	10.57	3.10	-23.44
20	0	14	1.455	1.231	.2029	.0822	.2267	.1377	9.80	3.29	-21.60
22	0	14	1.235	1.045	.2095	.0838	.2336	.1402	8.37	3.56	-18.18
24	0	14	1.057	0.8947	.2169	.0861	.2410	.1435			
26	0	14	0.9128	0.7726	.2252	.0890	.2491	.1476			
28	0	14	0.7946	0.6726	.2346	.0925	.2577	.1524			
30	0	14	0.6973	0.5902	.2449	.0965	.2671	.1579			
32	0	14	0.6165	0.5218	.2564	.1012	.2771	.1641			
34	0	14	0.5491	0.4647	.2691	.1065	.2878	.1709			
36	0	14	0.4924	0.4168	.2830	.1125	.2992	.1783			
38	0	14	0.4445	0.3762	.2981	.1190	.3112	.1863			
40	0	14	0.4037	0.3417	.3144	.1261	.3238	.1948			
45	0	14	0.3253	0.2753	.3601	.1460	.3573	.2173			
50	0	14	0.2700	0.2285	.4111	.1681	.3920	.2404			
55	0	14	0.2296	0.1944	.4642	.1908	.4258	.2625			
60	0	14	0.1990	0.1685	.5156	.2122	.4568	.2820			
65	0	14	0.1752	0.1483	.5621	.2309	.4838	.2982			
70	0	14	0.1560	0.1320	.6014	.2462	.5063	.3109			
75	0	14	0.1401	0.1186	.6330	.2577	.5246	.3204			
80	0	14	0.1269	0.1074	.6573	.2660	.5390	.3272			
90	0	14	0.1057	0.0895	.6887	.2752	.5594	.3353			
100	0	14	0.0895	0.0758	.7053	.2784	.5722	.3388			

ILLUMINANT C

R	Y	B	T(IN)	T	1931 X	1931 Y	1960 U	1960 V	1964 W*	1964 U*	1964 V*
0	0	16	10.66	9.811	0.1615	0.0908	0.1715	0.1446	36.52	-13.93	-77.25
1	0	16	9.288	7.861	.1622	.0876	.1742	.1410	32.71	-11.35	-70.73
2	0	16	8.115	6.868	.1630	.0847	.1767	.1377	30.52	-9.57	-67.31
3	0	16	7.112	6.020	.1639	.0821	.1792	.1347	28.48	-8.01	-63.91
4	0	16	6.252	5.292	.1648	.0798	.1816	.1320	26.57	-6.64	-60.56
5	0	16	5.513	4.666	.1657	.0778	.1840	.1295	24.78	-5.44	-57.26
6	0	16	4.875	4.127	.1667	.0760	.1863	.1274	23.10	-4.38	-54.03
7	0	16	4.323	3.659	.1677	.0744	.1885	.1255	21.52	-3.45	-50.88
8	0	16	3.844	3.254	.1688	.0730	.1908	.1238	20.05	-2.63	-47.82
9	0	16	3.428	2.901	.1699	.0718	.1930	.1224	18.66	-1.91	-44.85
10	0	16	3.064	2.593	.1712	.0708	.1952	.1212	17.35	-1.28	-41.98
11	0	16	2.745	2.324	.1725	.0700	.1974	.1201	16.11	-.73	-39.21
12	0	16	2.466	2.087	.1738	.0693	.1996	.1193	14.95	-.25	-36.54
13	0	16	2.221	1.880	.1753	.0687	.2018	.1187	13.85	.18	-33.97
14	0	16	2.004	1.697	.1769	.0683	.2041	.1183	12.82	.54	-31.49
15	0	16	1.813	1.535	.1785	.0681	.2064	.1180	11.84	.86	-29.12
16	0	16	1.644	1.392	.1803	.0679	.2088	.1180	10.91	1.12	-26.86
17	0	16	1.494	1.264	.1822	.0679	.2112	.1181	10.03	1.35	-24.68
18	0	16	1.361	1.152	.1842	.0680	.2137	.1184	9.20	1.54	-22.61
19	0	16	1.242	1.051	.1863	.0682	.2163	.1188	8.42	1.69	-20.63
20	0	16	1.136	0.9613	.1886	.0686	.2189	.1195			
22	0	16	0.9562	0.8093	.1936	.0697	.2246	.1212			
24	0	16	0.8118	0.6871	.1993	.0712	.2307	.1237			
26	0	16	0.6949	0.5881	.2058	.0733	.2373	.1268			
28	0	16	0.5997	0.5076	.2130	.0758	.2446	.1306			
30	0	16	0.5217	0.4416	.2213	.0789	.2525	.1351			
32	0	16	0.4574	0.3872	.2305	.0826	.2612	.1404			
34	0	16	0.4041	0.3421	.2408	.0868	.2706	.1463			
36	0	16	0.3597	0.3045	.2524	.0916	.2808	.1530			
38	0	16	0.3225	0.2730	.2652	.0971	.2918	.1603			
40	0	16	0.2911	0.2464	.2793	.1031	.3036	.1682			
45	0	16	0.2316	0.1961	.3202	.1209	.3361	.1904			
50	0	16	0.1908	0.1615	.3686	.1419	.3718	.2147			
55	0	16	0.1616	0.1368	.4222	.1650	.4083	.2394			
60	0	16	0.1401	0.1186	.4773	.1883	.4434	.2625			
65	0	16	0.1235	0.1046	.5298	.2101	.4750	.2825			
70	0	16	0.1104	0.0935	.5763	.2288	.5019	.2989			
75	0	16	0.0997	0.0844	.6148	.2438	.5237	.3115			
80	0	16	0.0908	0.0769	.6450	.2549	.5410	.3207			
90	0	16	0.0767	0.0649	.6845	.2682	.5646	.3318			
100	0	16	0.0658	0.0557	.7051	.2736	.5788	.3369			

ILLUMINANT C

R	Y	B	T(IN)	T	1931 X	1931 Y	1960 U	1960 V	1964 W*	1964 U*	1964 V*
0	0	18	8.701	8.005	0.1582	0.0781	0.1747	0.1294	33.01	-11.21	-76.36
1	0	18	7.594	6.428	.1588	.0754	.1770	.1261	29.48	-9.14	-69.45
2	0	18	6.647	5.626	.1594	.0730	.1792	.1231	27.46	-7.73	-65.76
3	0	18	5.835	4.939	.1600	.0709	.1813	.1204	25.57	-6.50	-62.13
4	0	18	5.136	4.347	.1607	.0689	.1833	.1180	23.80	-5.42	-58.58
5	0	18	4.533	3.837	.1614	.0672	.1853	.1158	22.14	-4.47	-55.12
6	0	18	4.011	3.395	.1621	.0657	.1872	.1138	20.57	-3.64	-51.76
7	0	18	3.558	3.012	.1629	.0643	.1891	.1120	19.10	-2.92	-48.50
8	0	18	3.164	2.678	.1638	.0632	.1910	.1105	17.72	-2.28	-45.34
9	0	18	2.820	2.387	.1647	.0621	.1928	.1091	16.41	-1.72	-42.29
10	0	18	2.519	2.132	.1656	.0612	.1946	.1079	15.18	-1.23	-39.35
11	0	18	2.256	1.909	.1666	.0604	.1964	.1069	14.01	-.81	-36.51
12	0	18	2.024	1.713	.1676	.0598	.1982	.1061	12.91	-.44	-33.78
13	0	18	1.820	1.540	.1687	.0592	.2001	.1054	11.87	-.12	-31.17
14	0	18	1.640	1.388	.1699	.0588	.2019	.1049	10.89	.15	-28.65
15	0	18	1.481	1.253	.1712	.0585	.2038	.1045	9.95	.38	-26.24
16	0	18	1.340	1.134	.1725	.0583	.2057	.1043	9.07	.58	-23.94
17	0	18	1.214	1.028	.1740	.0582	.2077	.1042	8.23	.73	-21.73
18	0	18	1.103	0.9336	.1755	.0582	.2098	.1043			
19	0	18	1.004	0.8497	.1771	.0583	.2119	.1045			
20	0	18	0.9154	0.7748	.1789	.0584	.2140	.1049			
22	0	18	0.7657	0.6481	.1828	.0591	.2187	.1060			
24	0	18	0.6456	0.5464	.1872	.0601	.2237	.1078			
26	0	18	0.5485	0.4643	.1922	.0616	.2292	.1101			
28	0	18	0.4698	0.3976	.1980	.0635	.2353	.1131			
30	0	18	0.4055	0.3433	.2045	.0658	.2420	.1168			
32	0	18	0.3529	0.2987	.2120	.0686	.2494	.1211			
34	0	18	0.3095	0.2619	.2204	.0719	.2576	.1261			
36	0	18	0.2735	0.2315	.2299	.0758	.2666	.1318			
38	0	18	0.2436	0.2062	.2406	.0802	.2764	.1383			
40	0	18	0.2185	0.1850	.2526	.0853	.2872	.1455			
45	0	18	0.1718	0.1454	.2885	.1007	.3179	.1663			
50	0	18	0.1404	0.1188	.3331	.1199	.3532	.1907			
55	0	18	0.1185	0.1003	.3851	.1422	.3914	.2168			
60	0	18	0.1027	0.0869	.4416	.1662	.4296	.2426			
65	0	18	0.0908	0.0768	.4982	.1900	.4653	.2661			
70	0	18	0.0815	0.0690	.5505	.2115	.4963	.2860			
75	0	18	0.0740	0.0627	.5955	.2295	.5220	.3018			
80	0	18	0.0678	0.0574	.6316	.2436	.5422	.3137			
90	0	18	0.0580	0.0491	.6796	.2611	.5694	.3282			
100	0	18	0.0504	0.0427	.7044	.2689	.5848	.3349			

ILLUMINANT C

R	Y	B	T(IN)	T	1931 X	1931 Y	1960 U	1960 V	1964 W*	1964 U*	1964 V*
0	0	20	7.216	6.639	0.1560	0.0679	0.1782	0.1163	29.99	-8.83	-74.48
1	0	20	6.314	5.344	.1565	.0657	.1802	.1134	26.71	-7.19	-67.34
2	0	20	5.539	4.689	.1570	.0637	.1820	.1108	24.84	-6.08	-63.48
3	0	20	4.872	4.124	.1575	.0619	.1838	.1084	23.09	-5.11	-59.72
4	0	20	4.296	3.636	.1581	.0603	.1855	.1062	21.44	-4.27	-56.07
5	0	20	3.797	3.214	.1586	.0589	.1872	.1042	19.89	-3.53	-52.52
6	0	20	3.364	2.847	.1592	.0576	.1888	.1024	18.43	-2.88	-49.10
7	0	20	2.987	2.528	.1598	.0564	.1904	.1008	17.06	-2.31	-45.78
8	0	20	2.657	2.249	.1605	.0554	.1920	.0994	15.76	-1.82	-42.58
9	0	20	2.369	2.005	.1612	.0545	.1935	.0982	14.53	-1.39	-39.50
10	0	20	2.117	1.792	.1619	.0537	.1951	.0971	13.36	-1.01	-36.53
11	0	20	1.895	1.604	.1627	.0530	.1966	.0961	12.26	-.69	-33.67
12	0	20	1.700	1.438	.1635	.0524	.1981	.0953	11.22	-.41	-30.93
13	0	20	1.527	1.293	.1644	.0520	.1996	.0946	10.23	-.17	-28.30
14	0	20	1.375	1.164	.1653	.0515	.2011	.0941	9.30	.03	-25.77
15	0	20	1.240	1.049	.1663	.0512	.2027	.0936	8.41	.20	-23.35
16	0	20	1.120	0.9481	.1674	.0510	.2043	.0933			
17	0	20	1.014	0.8581	.1685	.0508	.2060	.0932			
18	0	20	0.9193	0.7781	.1697	.0507	.2076	.0931			
19	0	20	0.8350	0.7067	.1710	.0507	.2094	.0932			
20	0	20	0.7598	0.6431	.1724	.0508	.2112	.0934			
22	0	20	0.6325	0.5354	.1755	.0512	.2151	.0941			
24	0	20	0.5304	0.4489	.1790	.0519	.2193	.0954			
26	0	20	0.4480	0.3792	.1830	.0529	.2239	.0972			
28	0	20	0.3813	0.3227	.1876	.0543	.2290	.0995			
30	0	20	0.3271	0.2768	.1930	.0561	.2348	.1024			
32	0	20	0.2827	0.2393	.1990	.0583	.2411	.1060			
34	0	20	0.2463	0.2085	.2060	.0609	.2483	.1102			
36	0	20	0.2164	0.1831	.2140	.0641	.2562	.1150			
38	0	20	0.1915	0.1621	.2230	.0677	.2650	.1207			
40	0	20	0.1709	0.1447	.2332	.0719	.2747	.1270			
45	0	20	0.1328	0.1124	.2646	.0851	.3032	.1462			
50	0	20	0.1078	0.0912	.3051	.1023	.3374	.1697			
55	0	20	0.0907	0.0767	.3545	.1233	.3760	.1962			
60	0	20	0.0786	0.0665	.4106	.1472	.4163	.2238			
65	0	20	0.0696	0.0589	.4694	.1719	.4553	.2501			
70	0	20	0.0628	0.0531	.5261	.1955	.4901	.2732			
75	0	20	0.0573	0.0485	.5765	.2161	.5193	.2920			
80	0	20	0.0529	0.0447	.6180	.2328	.5424	.3065			
90	0	20	0.0458	0.0388	.6742	.2544	.5732	.3245			
100	0	20	0.0403	0.0341	.7033	.2647	.5899	.3330			

ILLUMINANT C

R	Y	B	T(IN)	T	1931 X	1931 Y	1960 U	1960 V	1964 W*	1964 U*	1964 V*
0	0	25	4.830	4.444	0.1537	0.0502	0.1866	0.0914	24.10	-4.46	-67.66
1	0	25	4.257	3.603	.1541	.0488	.1880	.0894	21.33	-3.57	-60.42
2	0	25	3.759	3.182	.1544	.0476	.1893	.0876	19.77	-2.98	-56.48
3	0	25	3.327	2.816	.1547	.0465	.1905	.0859	18.30	-2.46	-52.67
4	0	25	2.949	2.496	.1551	.0455	.1917	.0844	16.91	-2.02	-49.01
5	0	25	2.619	2.217	.1555	.0446	.1928	.0830	15.60	-1.63	-45.48
6	0	25	2.330	1.972	.1558	.0438	.1940	.0818	14.35	-1.29	-42.08
7	0	25	2.076	1.757	.1563	.0431	.1950	.0806	13.17	-1.00	-38.81
8	0	25	1.853	1.569	.1567	.0424	.1961	.0796	12.05	-.74	-35.66
9	0	25	1.657	1.402	.1571	.0418	.1972	.0787	10.98	-.53	-32.64
10	0	25	1.483	1.255	.1576	.0413	.1982	.0779	9.97	-.34	-29.73
11	0	25	1.330	1.125	.1581	.0408	.1992	.0771	9.00	-.19	-26.94
12	0	25	1.194	1.010	.1586	.0404	.2003	.0765	8.09	-.06	-24.26
13	0	25	1.073	0.9083	.1591	.0400	.2013	.0759			
14	0	25	0.9662	0.8177	.1597	.0397	.2024	.0755			
15	0	25	0.8710	0.7372	.1604	.0395	.2035	.0751			
16	0	25	0.7863	0.6655	.1610	.0392	.2046	.0748			
17	0	25	0.7108	0.6016	.1618	.0391	.2057	.0745			
18	0	25	0.6434	0.5446	.1625	.0390	.2069	.0744			
19	0	25	0.5832	0.4936	.1633	.0389	.2081	.0743			
20	0	25	0.5294	0.4481	.1642	.0389	.2093	.0744			
22	0	25	0.4381	0.3708	.1662	.0390	.2120	.0746			
24	0	25	0.3647	0.3087	.1685	.0393	.2150	.0753			
26	0	25	0.3055	0.2586	.1711	.0399	.2182	.0763			
28	0	25	0.2576	0.2180	.1742	.0407	.2219	.0777			
30	0	25	0.2188	0.1852	.1777	.0417	.2260	.0796			
32	0	25	0.1871	0.1584	.1819	.0430	.2307	.0819			
34	0	25	0.1613	0.1365	.1867	.0447	.2360	.0848			
36	0	25	0.1402	0.1186	.1922	.0467	.2420	.0883			
38	0	25	0.1228	0.1040	.1986	.0492	.2488	.0924			
40	0	25	0.1085	0.0918	.2060	.0520	.2565	.0972			
45	0	25	0.0826	0.0699	.2296	.0615	.2801	.1126			
50	0	25	0.0661	0.0559	.2620	.0749	.3106	.1331			
55	0	25	0.0553	0.0468	.3043	.0925	.3476	.1585			
60	0	25	0.0479	0.0405	.3564	.1144	.3895	.1875			
65	0	25	0.0427	0.0361	.4156	.1393	.4329	.2176			
70	0	25	0.0389	0.0329	.4775	.1652	.4742	.2462			
75	0	25	0.0359	0.0304	.5364	.1899	.5101	.2709			
80	0	25	0.0335	0.0283	.5877	.2112	.5393	.2907			
90	0	25	0.0297	0.0251	.6606	.2412	.5778	.3165			
100	0	25	0.0267	0.0226	.6993	.2567	.5974	.3290			

ILLUMINANT C

R	Y	B	T(IN)	T	1931 X	1931 Y	1960 U	1960 V	1964 W*	1964 U*	1964 V*
0	0	30	3.509	3.228	0.1535	0.0396	0.1938	0.0751	19.95	-1.82	-60.23
1	0	30	3.114	2.636	.1538	.0388	.1948	.0737	17.53	-1.39	-53.24
2	0	30	2.768	2.343	.1541	.0381	.1957	.0726	16.21	-1.09	-49.46
3	0	30	2.464	2.086	.1543	.0374	.1966	.0715	14.94	-.84	-45.82
4	0	30	2.197	1.859	.1546	.0368	.1974	.0704	13.74	-.62	-42.32
5	0	30	1.961	1.660	.1549	.0362	.1982	.0695	12.60	-.43	-38.95
6	0	30	1.753	1.484	.1552	.0357	.1991	.0687	11.51	-.27	-35.72
7	0	30	1.569	1.328	.1555	.0352	.1998	.0679	10.48	-.14	-32.61
8	0	30	1.405	1.189	.1558	.0348	.2006	.0672	9.49	-.03	-29.62
9	0	30	1.261	1.067	.1561	.0344	.2014	.0666	8.55	.06	-26.74
10	0	30	1.132	0.9580	.1565	.0341	.2022	.0660			
11	0	30	1.018	0.8612	.1568	.0337	.2029	.0655			
12	0	30	0.9157	0.7750	.1572	.0335	.2037	.0651			
13	0	30	0.8249	0.6982	.1577	.0332	.2045	.0647			
14	0	30	0.7439	0.6297	.1581	.0330	.2053	.0644			
15	0	30	0.6716	0.5685	.1586	.0329	.2061	.0641			
16	0	30	0.6070	0.5138	.1591	.0327	.2070	.0639			
17	0	30	0.5492	0.4648	.1596	.0326	.2078	.0637			
18	0	30	0.4974	0.4210	.1602	.0326	.2087	.0636			
19	0	30	0.4510	0.3818	.1608	.0325	.2097	.0636			
20	0	30	0.4095	0.3466	.1615	.0325	.2106	.0636			
22	0	30	0.3387	0.2867	.1630	.0326	.2127	.0638			
24	0	30	0.2816	0.2383	.1648	.0328	.2151	.0643			
26	0	30	0.2354	0.1992	.1668	.0332	.2177	.0651			
28	0	30	0.1979	0.1675	.1692	.0338	.2206	.0662			
30	0	30	0.1675	0.1417	.1719	.0346	.2239	.0676			
32	0	30	0.1427	0.1208	.1752	.0356	.2277	.0695			
34	0	30	0.1225	0.1037	.1790	.0369	.2321	.0718			
36	0	30	0.1060	0.0897	.1834	.0385	.2370	.0746			
38	0	30	0.0924	0.0782	.1886	.0404	.2427	.0780			
40	0	30	0.0813	0.0688	.1946	.0427	.2492	.0820			
45	0	30	0.0612	0.0518	.2141	.0504	.2696	.0952			
50	0	30	0.0486	0.0412	.2417	.0616	.2969	.1135			
55	0	30	0.0405	0.0343	.2790	.0771	.3315	.1374			
60	0	30	0.0352	0.0298	.3269	.0971	.3724	.1660			
65	0	30	0.0314	0.0266	.3841	.1212	.4168	.1973			
70	0	30	0.0288	0.0243	.4466	.1476	.4607	.2283			
75	0	30	0.0267	0.0226	.5090	.1739	.5004	.2564			
80	0	30	0.0251	0.0212	.5655	.1978	.5332	.2797			
90	0	30	0.0225	0.0191	.6491	.2331	.5772	.3109			
100	0	30	0.0205	0.0174	.6947	.2522	.5992	.3263			

ILLUMINANT C

R	Y	B	T(IN)	T	1931 X	1931 Y	1960 U	1960 V	1964 W*	1964 U*	1964 V*
0	0	40	2.205	2.028	0.1549	0.0288	0.2042	0.0569	14.65	.63	-47.69
1	0	40	1.977	1.674	.1551	.0284	.2047	.0563	12.68	.63	-41.38
2	0	40	1.775	1.502	.1553	.0281	.2052	.0558	11.63	.66	-38.04
3	0	40	1.594	1.349	.1555	.0279	.2057	.0553	10.63	.67	-34.81
4	0	40	1.433	1.213	.1557	.0276	.2062	.0549	9.66	.67	-31.71
5	0	40	1.289	1.091	.1559	.0274	.2067	.0545	8.74	.66	-28.73
6	0	40	1.161	0.9825	.1561	.0272	.2071	.0541			
7	0	40	1.046	0.8851	.1563	.0270	.2076	.0537			
8	0	40	0.9428	0.7980	.1565	.0268	.2081	.0534			
9	0	40	0.8506	0.7199	.1568	.0266	.2086	.0532			
10	0	40	0.7679	0.6499	.1570	.0265	.2091	.0529			
11	0	40	0.6937	0.5872	.1573	.0264	.2096	.0527			
12	0	40	0.6271	0.5308	.1576	.0263	.2101	.0526			
13	0	40	0.5674	0.4802	.1579	.0262	.2106	.0524			
14	0	40	0.5137	0.4348	.1582	.0261	.2112	.0523			
15	0	40	0.4654	0.3939	.1586	.0261	.2117	.0522			
16	0	40	0.4220	0.3572	.1589	.0260	.2123	.0522			
17	0	40	0.3829	0.3241	.1594	.0260	.2129	.0522			
18	0	40	0.3478	0.2944	.1598	.0260	.2136	.0522			
19	0	40	0.3161	0.2676	.1603	.0261	.2142	.0523			
20	0	40	0.2876	0.2434	.1608	.0261	.2149	.0524			
22	0	40	0.2388	0.2021	.1619	.0263	.2165	.0527			
24	0	40	0.1990	0.1685	.1632	.0266	.2182	.0533			
26	0	40	0.1667	0.1411	.1648	.0270	.2202	.0540			
28	0	40	0.1403	0.1188	.1666	.0275	.2224	.0550			
30	0	40	0.1188	0.1006	.1688	.0281	.2250	.0563			
32	0	40	0.1012	0.0857	.1713	.0290	.2280	.0579			
34	0	40	0.0868	0.0735	.1743	.0300	.2315	.0598			
36	0	40	0.0750	0.0635	.1778	.0313	.2354	.0622			
38	0	40	0.0654	0.0553	.1819	.0329	.2401	.0651			
40	0	40	0.0574	0.0486	.1867	.0348	.2454	.0685			
45	0	40	0.0430	0.0364	.2025	.0411	.2624	.0799			
50	0	40	0.0341	0.0288	.2254	.0506	.2858	.0961			
55	0	40	0.0283	0.0240	.2574	.0640	.3166	.1180			
60	0	40	0.0246	0.0208	.3000	.0820	.3546	.1454			
65	0	40	0.0220	0.0186	.3530	.1046	.3978	.1768			
70	0	40	0.0202	0.0171	.4139	.1307	.4426	.2096			
75	0	40	0.0188	0.0159	.4777	.1581	.4847	.2406			
80	0	40	0.0177	0.0150	.5383	.1842	.5209	.2673			
90	0	40	0.0161	0.0136	.6328	.2250	.5708	.3044			
100	0	40	0.0148	0.0125	.6867	.2484	.5962	.3235			

ILLUMINANT C

R	Y	B	T(IN)	T	1931 X	1931 Y	1960 U	1960 V	1964 W*	1964 U*	1964 V*
0	0	50	1.591	1.464	0.1566	0.0236	0.2109	0.0476	11.38	1.49	-38.43
1	0	50	1.435	1.215	.1567	.0234	.2112	.0474	9.67	1.30	-32.69
2	0	50	1.295	1.096	.1569	.0233	.2116	.0471	8.78	1.22	-29.68
3	0	50	1.169	0.9895	.1570	.0232	.2119	.0469			
4	0	50	1.056	0.8938	.1572	.0231	.2122	.0467			
5	0	50	0.9543	0.8077	.1573	.0230	.2125	.0465			
6	0	50	0.8628	0.7302	.1575	.0229	.2128	.0464			
7	0	50	0.7804	0.6605	.1577	.0228	.2132	.0463			
8	0	50	0.7062	0.5977	.1578	.0227	.2135	.0461			
9	0	50	0.6394	0.5411	.1580	.0227	.2139	.0460			
10	0	50	0.5791	0.4902	.1583	.0226	.2142	.0459			
11	0	50	0.5249	0.4442	.1585	.0226	.2146	.0459			
12	0	50	0.4759	0.4028	.1587	.0226	.2150	.0459			
13	0	50	0.4318	0.3655	.1590	.0226	.2154	.0458			
14	0	50	0.3920	0.3318	.1593	.0226	.2158	.0458			
15	0	50	0.3560	0.3014	.1595	.0226	.2162	.0459			
16	0	50	0.3236	0.2739	.1599	.0226	.2167	.0459			
17	0	50	0.2943	0.2491	.1602	.0226	.2172	.0460			
18	0	50	0.2679	0.2268	.1606	.0227	.2177	.0461			
19	0	50	0.2440	0.2065	.1610	.0227	.2182	.0462			
20	0	50	0.2225	0.1883	.1614	.0228	.2188	.0464			
22	0	50	0.1853	0.1569	.1624	.0231	.2201	.0469			
24	0	50	0.1550	0.1312	.1636	.0234	.2215	.0475			
26	0	50	0.1302	0.1102	.1649	.0238	.2232	.0483			
28	0	50	0.1099	0.0930	.1665	.0243	.2251	.0493			
30	0	50	0.0933	0.0789	.1684	.0249	.2274	.0505			
32	0	50	0.0796	0.0674	.1706	.0258	.2299	.0521			
34	0	50	0.0684	0.0579	.1732	.0267	.2330	.0539			
36	0	50	0.0592	0.0501	.1763	.0279	.2365	.0562			
38	0	50	0.0516	0.0437	.1799	.0294	.2405	.0589			
40	0	50	0.0454	0.0384	.1842	.0311	.2452	.0621			
45	0	50	0.0341	0.0288	.1983	.0369	.2604	.0727			
50	0	50	0.0270	0.0228	.2189	.0456	.2816	.0880			
55	0	50	0.0224	0.0190	.2481	.0581	.3100	.1089			
60	0	50	0.0195	0.0165	.2875	.0751	.3458	.1354			
65	0	50	0.0174	0.0148	.3377	.0968	.3874	.1666			
70	0	50	0.0160	0.0135	.3967	.1225	.4316	.1999			
75	0	50	0.0149	0.0126	.4602	.1502	.4742	.2321			
80	0	50	0.0141	0.0119	.5222	.1773	.5116	.2605			
90	0	50	0.0128	0.0108	.6220	.2210	.5644	.3008			
100	0	50	0.0118	0.0100	.6807	.2469	.5917	.3219			

ILLUMINANT C

R	Y	B	T(IN)	T	1931 X	1931 Y	1960 U	1960 V	1964 W*	1964 U*	1964 V*
0	1	0	98.20	90.35	0.3264	0.3475	0.2003	0.3199	95.18	-.67	15.60
1	1	0	86.49	73.20	.3361	.3386	.2104	.3179	87.58	10.81	12.06
2	1	0	76.64	64.87	.3460	.3308	.2204	.3162	83.45	21.23	9.61
3	1	0	68.32	57.83	.3558	.3239	.2305	.3147	79.68	30.68	7.67
4	1	0	61.26	51.85	.3657	.3180	.2405	.3136	76.22	39.23	6.19
5	1	0	55.24	46.75	.3756	.3128	.2503	.3127	73.06	46.95	5.11
6	1	0	50.07	42.38	.3855	.3085	.2600	.3121	70.16	53.92	4.36
7	1	0	45.61	38.61	.3953	.3049	.2695	.3118	67.50	60.20	3.89
8	1	0	41.75	35.34	.4051	.3020	.2788	.3117	65.04	65.86	3.67
9	1	0	38.39	32.49	.4148	.2996	.2878	.3118	62.77	70.94	3.64
10	1	0	35.44	30.00	.4244	.2977	.2966	.3121	60.68	75.50	3.77
11	1	0	32.85	27.80	.4339	.2964	.3051	.3126	58.73	79.60	4.03
12	1	0	30.55	25.86	.4433	.2954	.3134	.3132	56.93	83.27	4.39
13	1	0	28.51	24.13	.4525	.2948	.3214	.3140	55.24	86.55	4.82
14	1	0	26.68	22.58	.4616	.2945	.3291	.3149	53.67	89.47	5.31
15	1	0	25.05	21.20	.4706	.2945	.3366	.3159	52.19	92.08	5.84
16	1	0	23.57	19.95	.4793	.2946	.3438	.3170	50.80	94.39	6.39
17	1	0	22.23	18.82	.4879	.2950	.3507	.3181	49.50	96.44	6.95
18	1	0	21.02	17.79	.4963	.2956	.3574	.3193	48.26	98.23	7.51
19	1	0	19.91	16.85	.5045	.2962	.3639	.3205	47.09	99.82	8.07
20	1	0	18.89	15.99	.5125	.2970	.3701	.3217	45.98	101.20	8.61
22	1	0	17.10	14.47	.5279	.2987	.3819	.3242	43.92	103.40	9.62
24	1	0	15.57	13.18	.5424	.3005	.3929	.3266	42.05	104.97	10.53
26	1	0	14.24	12.06	.5560	.3024	.4031	.3289	40.32	106.01	11.31
28	1	0	13.09	11.08	.5686	.3042	.4125	.3311	38.73	106.58	11.96
30	1	0	12.07	10.22	.5804	.3059	.4213	.3331	37.25	106.75	12.49
32	1	0	11.17	9.457	.5913	.3075	.4295	.3350	35.87	106.60	12.90
34	1	0	10.37	8.778	.6013	.3088	.4371	.3367	34.57	106.15	13.20
36	1	0	9.651	8.168	.6105	.3099	.4441	.3382	33.35	105.47	13.39
38	1	0	9.002	7.619	.6189	.3108	.4507	.3396	32.19	104.56	13.50
40	1	0	8.414	7.122	.6265	.3116	.4568	.3408	31.10	103.48	13.53
45	1	0	7.163	6.063	.6428	.3126	.4704	.3432	28.59	100.17	13.32
50	1	0	6.156	5.211	.6555	.3127	.4819	.3448	26.34	96.25	12.83
55	1	0	5.332	4.513	.6655	.3120	.4917	.3458	24.31	91.94	12.18
60	1	0	4.648	3.934	.6733	.3109	.5002	.3465	22.47	87.43	11.43
65	1	0	4.074	3.448	.6795	.3095	.5076	.3468	20.77	82.82	10.65
70	1	0	3.588	3.037	.6845	.3079	.5141	.3469	19.20	78.19	9.87
75	1	0	3.173	2.685	.6885	.3062	.5199	.3468	17.75	73.61	9.11
80	1	0	2.816	2.384	.6918	.3045	.5251	.3467	16.40	69.10	8.38
90	1	0	2.240	1.896	.6970	.3012	.5341	.3462	13.94	60.40	7.04
100	1	0	1.801	1.525	.7010	.2982	.5417	.3456	11.77	52.16	5.86

ILLUMINANT C

R	Y	B	T(IN)	T	1931 X	1931 Y	1960 U	1960 V	1964 W*	1964 U*	1964 V*
0	2	0	96.54	88.82	0.3403	0.3733	0.2002	0.3294	94.54	-.80	27.16
1	2	0	85.02	71.96	.3508	.3638	.2106	.3276	86.98	10.98	22.90
2	2	0	75.33	63.76	.3614	.3554	.2210	.3260	82.88	21.69	20.08
3	2	0	67.15	56.84	.3720	.3479	.2314	.3246	79.12	31.39	17.77
4	2	0	60.21	50.96	.3825	.3413	.2417	.3235	75.69	40.18	15.91
5	2	0	54.29	45.95	.3930	.3356	.2519	.3226	72.55	48.11	14.43
6	2	0	49.22	41.66	.4033	.3306	.2619	.3220	69.66	55.27	13.29
7	2	0	44.84	37.95	.4136	.3264	.2717	.3216	67.01	61.71	12.43
8	2	0	41.05	34.74	.4237	.3228	.2813	.3214	64.58	67.49	11.82
9	2	0	37.74	31.95	.4337	.3198	.2906	.3214	62.33	72.68	11.40
10	2	0	34.85	29.50	.4435	.3173	.2996	.3216	60.24	77.31	11.16
11	2	0	32.30	27.34	.4531	.3153	.3083	.3219	58.31	81.46	11.05
12	2	0	30.05	25.43	.4625	.3138	.3168	.3224	56.52	85.15	11.05
13	2	0	28.04	23.74	.4717	.3126	.3249	.3229	54.85	88.44	11.14
14	2	0	26.25	22.22	.4807	.3117	.3327	.3236	53.28	91.35	11.29
15	2	0	24.64	20.86	.4895	.3110	.3403	.3244	51.82	93.93	11.48
16	2	0	23.19	19.63	.4980	.3106	.3476	.3252	50.44	96.20	11.72
17	2	0	21.88	18.52	.5063	.3104	.3546	.3261	49.14	98.19	11.97
18	2	0	20.69	17.51	.5144	.3104	.3613	.3270	47.92	99.93	12.24
19	2	0	19.60	16.59	.5223	.3105	.3677	.3279	46.76	101.44	12.51
20	2	0	18.60	15.75	.5299	.3107	.3739	.3288	45.66	102.74	12.78
22	2	0	16.84	14.25	.5444	.3113	.3856	.3308	43.62	104.77	13.29
24	2	0	15.34	12.98	.5579	.3120	.3964	.3326	41.75	106.16	13.73
26	2	0	14.03	11.88	.5704	.3129	.4064	.3344	40.04	107.01	14.10
28	2	0	12.90	10.92	.5820	.3137	.4157	.3361	38.46	107.40	14.38
30	2	0	11.90	10.07	.5927	.3145	.4242	.3376	36.99	107.40	14.58
32	2	0	11.01	9.322	.6025	.3151	.4321	.3391	35.62	107.08	14.70
34	2	0	10.22	8.654	.6114	.3157	.4395	.3403	34.33	106.48	14.73
36	2	0	9.515	8.054	.6196	.3161	.4463	.3415	33.11	105.65	14.70
38	2	0	8.876	7.512	.6271	.3163	.4527	.3425	31.96	104.63	14.61
40	2	0	8.296	7.022	.6339	.3164	.4586	.3434	30.87	103.43	14.46
45	2	0	7.064	5.979	.6482	.3161	.4717	.3451	28.37	99.90	13.92
50	2	0	6.071	5.138	.6595	.3152	.4828	.3462	26.14	95.81	13.20
55	2	0	5.258	4.450	.6683	.3139	.4923	.3468	24.12	91.40	12.39
60	2	0	4.583	3.879	.6753	.3122	.5006	.3472	22.28	86.81	11.54
65	2	0	4.016	3.399	.6809	.3104	.5078	.3473	20.59	82.16	10.70
70	2	0	3.537	2.993	.6854	.3086	.5142	.3472	19.03	77.52	9.87
75	2	0	3.127	2.647	.6891	.3067	.5199	.3471	17.58	72.92	9.09
80	2	0	2.775	2.349	.6922	.3049	.5250	.3468	16.23	68.41	8.34
90	2	0	2.207	1.868	.6972	.3014	.5340	.3463	13.79	59.72	6.99
100	2	0	1.775	1.502	.7010	.2983	.5416	.3457	11.63	51.51	5.80

ILLUMINANT C

					-----1931----		----1960-----		-------1964--------		
R	Y	B	T(IN)	T	X	Y	U	V	W*	U*	V*
0	3	0	94.98	87.38	0.3521	0.3946	0.2003	0.3367	93.94	-.63	35.92
1	3	0	83.64	70.79	.3634	.3847	.2110	.3350	86.42	11.36	31.11
2	3	0	74.11	62.72	.3746	.3757	.2217	.3335	82.33	22.26	28.03
3	3	0	66.06	55.91	.3857	.3677	.2323	.3322	78.60	32.13	25.44
4	3	0	59.23	50.14	.3967	.3606	.2429	.3311	75.18	41.08	23.28
5	3	0	53.41	45.21	.4076	.3543	.2533	.3303	72.06	49.16	21.51
6	3	0	48.42	40.98	.4184	.3488	.2636	.3296	69.19	56.44	20.07
7	3	0	44.12	37.34	.4289	.3440	.2736	.3292	66.56	62.98	18.91
8	3	0	40.39	34.18	.4393	.3398	.2834	.3289	64.14	68.83	17.99
9	3	0	37.14	31.44	.4494	.3363	.2929	.3288	61.90	74.07	17.29
10	3	0	34.30	29.03	.4593	.3333	.3021	.3288	59.83	78.75	16.75
11	3	0	31.79	26.91	.4689	.3307	.3110	.3290	57.92	82.91	16.35
12	3	0	29.58	25.03	.4783	.3286	.3195	.3293	56.13	86.60	16.07
13	3	0	27.61	23.37	.4874	.3269	.3278	.3297	54.47	89.88	15.89
14	3	0	25.85	21.88	.4962	.3254	.3357	.3302	52.92	92.76	15.77
15	3	0	24.27	20.54	.5048	.3243	.3433	.3308	51.47	95.30	15.72
16	3	0	22.84	19.33	.5131	.3234	.3506	.3314	50.10	97.53	15.70
17	3	0	21.55	18.24	.5212	.3227	.3576	.3321	48.81	99.46	15.72
18	3	0	20.38	17.25	.5289	.3221	.3643	.3328	47.59	101.13	15.76
19	3	0	19.31	16.34	.5364	.3217	.3708	.3335	46.44	102.57	15.82
20	3	0	18.33	15.51	.5437	.3214	.3769	.3342	45.35	103.80	15.87
22	3	0	16.60	14.05	.5573	.3210	.3885	.3357	43.32	105.68	15.99
24	3	0	15.11	12.79	.5699	.3209	.3992	.3372	41.47	106.91	16.09
26	3	0	13.83	11.71	.5816	.3209	.4090	.3385	39.77	107.61	16.14
28	3	0	12.72	10.76	.5922	.3210	.4180	.3398	38.20	107.84	16.14
30	3	0	11.73	9.931	.6020	.3210	.4264	.3410	36.74	107.71	16.09
32	3	0	10.86	9.192	.6110	.3209	.4341	.3421	35.37	107.26	15.98
34	3	0	10.08	8.534	.6191	.3208	.4413	.3430	34.09	106.54	15.83
36	3	0	9.384	7.942	.6265	.3207	.4479	.3439	32.88	105.60	15.63
38	3	0	8.753	7.409	.6332	.3204	.4541	.3446	31.74	104.48	15.39
40	3	0	8.182	6.925	.6393	.3200	.4598	.3452	30.65	103.20	15.12
45	3	0	6.966	5.896	.6523	.3188	.4726	.3464	28.16	99.49	14.33
50	3	0	5.987	5.067	.6624	.3172	.4834	.3472	25.94	95.28	13.44
55	3	0	5.185	4.388	.6704	.3153	.4927	.3476	23.93	90.79	12.52
60	3	0	4.519	3.825	.6767	.3132	.5008	.3477	22.10	86.15	11.60
65	3	0	3.960	3.352	.6819	.3112	.5079	.3477	20.41	81.48	10.70
70	3	0	3.486	2.951	.6861	.3091	.5142	.3475	18.86	76.82	9.85
75	3	0	3.082	2.609	.6896	.3071	.5198	.3473	17.42	72.22	9.04
80	3	0	2.735	2.315	.6925	.3051	.5250	.3470	16.07	67.72	8.29
90	3	0	2.175	1.841	.6973	.3016	.5339	.3464	13.64	59.04	6.92
100	3	0	1.748	1.480	.7010	.2984	.5414	.3457	11.49	50.86	5.74

ILLUMINANT C

R	Y	B	T(IN)	T	-----1931---- X	Y	----1960----- U	V	-------1964-------- W*	U*	V*
0	4	0	93.50	86.02	0.3623	0.4122	0.2006	0.3425	93.36	-.26	42.65
1	4	0	82.33	69.69	.3740	.4019	.2115	.3409	85.88	11.85	37.44
2	4	0	72.95	61.74	.3858	.3926	.2224	.3394	81.81	22.87	34.15
3	4	0	65.03	55.04	.3974	.3841	.2332	.3382	78.10	32.87	31.34
4	4	0	58.31	49.35	.4088	.3765	.2440	.3371	74.70	41.92	28.96
5	4	0	52.58	44.50	.4200	.3697	.2547	.3363	71.59	50.09	26.96
6	4	0	47.67	40.35	.4310	.3637	.2651	.3356	68.74	57.44	25.29
7	4	0	43.43	36.76	.4418	.3584	.2753	.3351	66.13	64.03	23.90
8	4	0	39.77	33.66	.4523	.3538	.2853	.3348	63.72	69.93	22.75
9	4	0	36.57	30.95	.4625	.3498	.2949	.3346	61.50	75.20	21.81
10	4	0	33.77	28.59	.4724	.3463	.3042	.3345	59.44	79.88	21.04
11	4	0	31.31	26.50	.4820	.3433	.3132	.3346	57.54	84.04	20.42
12	4	0	29.13	24.66	.4913	.3407	.3219	.3348	55.76	87.72	19.92
13	4	0	27.19	23.02	.5003	.3385	.3302	.3351	54.11	90.96	19.52
14	4	0	25.46	21.55	.5090	.3366	.3381	.3354	52.57	93.82	19.19
15	4	0	23.91	20.24	.5173	.3350	.3458	.3358	51.13	96.31	18.94
16	4	0	22.51	19.05	.5254	.3336	.3531	.3363	49.77	98.48	18.73
17	4	0	21.24	17.98	.5332	.3324	.3601	.3368	48.49	100.36	18.56
18	4	0	20.08	17.00	.5406	.3315	.3668	.3373	47.28	101.97	18.42
19	4	0	19.03	16.11	.5478	.3306	.3732	.3378	46.14	103.35	18.31
20	4	0	18.07	15.29	.5547	.3299	.3793	.3384	45.05	104.51	18.20
22	4	0	16.36	13.85	.5676	.3288	.3908	.3395	43.03	106.25	18.02
24	4	0	14.90	12.61	.5795	.3279	.4013	.3406	41.19	107.35	17.84
26	4	0	13.64	11.55	.5903	.3272	.4110	.3417	39.50	107.90	17.65
28	4	0	12.54	10.61	.6002	.3266	.4199	.3427	37.94	108.02	17.43
30	4	0	11.57	9.794	.6093	.3260	.4281	.3436	36.49	107.77	17.19
32	4	0	10.71	9.066	.6175	.3254	.4356	.3444	35.13	107.21	16.92
34	4	0	9.944	8.417	.6250	.3248	.4426	.3451	33.85	106.39	16.62
36	4	0	9.255	7.834	.6317	.3242	.4491	.3457	32.65	105.37	16.29
38	4	0	8.634	7.308	.6379	.3235	.4551	.3462	31.51	104.17	15.94
40	4	0	8.071	6.831	.6435	.3228	.4607	.3467	30.44	102.82	15.58
45	4	0	6.871	5.816	.6553	.3208	.4732	.3475	27.96	98.98	14.60
50	4	0	5.905	4.998	.6645	.3186	.4838	.3479	25.74	94.68	13.60
55	4	0	5.113	4.328	.6719	.3163	.4929	.3481	23.74	90.14	12.59
60	4	0	4.456	3.771	.6778	.3140	.5009	.3481	21.91	85.47	11.62
65	4	0	3.904	3.304	.6826	.3117	.5079	.3479	20.24	80.78	10.69
70	4	0	3.437	2.909	.6865	.3095	.5141	.3477	18.69	76.11	9.81
75	4	0	3.038	2.572	.6899	.3074	.5198	.3474	17.25	71.52	8.99
80	4	0	2.696	2.282	.6927	.3054	.5248	.3471	15.91	67.02	8.23
90	4	0	2.143	1.814	.6973	.3017	.5337	.3464	13.49	58.37	6.86
100	4	0	1.722	1.458	.7010	.2985	.5413	.3458	11.35	50.21	5.67

ILLUMINANT C

R	Y	B	T(IN)	T	1931 X	1931 Y	1960 U	1960 V	1964 W*	1964 U*	1964 V*
0	5	0	92.09	84.73	0.3709	0.4269	0.2010	0.3470	92.80	.21	47.90
1	5	0	81.09	68.63	.3832	.4163	.2120	.3455	85.36	12.40	42.38
2	5	0	71.85	60.81	.3953	.4065	.2231	.3441	81.31	23.50	38.93
3	5	0	64.05	54.21	.4073	.3977	.2341	.3430	77.62	33.58	35.96
4	5	0	57.43	48.61	.4190	.3897	.2451	.3419	74.24	42.69	33.40
5	5	0	51.79	43.83	.4305	.3825	.2559	.3411	71.15	50.91	31.22
6	5	0	46.95	39.74	.4417	.3761	.2665	.3404	68.31	58.30	29.36
7	5	0	42.78	36.21	.4526	.3704	.2769	.3398	65.71	64.91	27.79
8	5	0	39.17	33.16	.4632	.3654	.2869	.3395	63.31	70.83	26.45
9	5	0	36.03	30.49	.4735	.3609	.2967	.3392	61.10	76.10	25.33
10	5	0	33.27	28.16	.4834	.3570	.3061	.3391	59.06	80.78	24.38
11	5	0	30.85	26.11	.4929	.3536	.3151	.3390	57.17	84.92	23.58
12	5	0	28.71	24.30	.5021	.3505	.3238	.3391	55.41	88.57	22.90
13	5	0	26.80	22.68	.5110	.3479	.3322	.3393	53.77	91.78	22.33
14	5	0	25.09	21.24	.5195	.3456	.3402	.3395	52.23	94.59	21.84
15	5	0	23.56	19.95	.5276	.3436	.3478	.3398	50.80	97.03	21.42
16	5	0	22.18	18.78	.5355	.3419	.3551	.3401	49.45	99.15	21.06
17	5	0	20.94	17.72	.5430	.3403	.3621	.3404	48.18	100.97	20.75
18	5	0	19.80	16.76	.5501	.3390	.3688	.3408	46.98	102.53	20.47
19	5	0	18.76	15.88	.5570	.3378	.3751	.3412	45.84	103.84	20.21
20	5	0	17.81	15.08	.5636	.3367	.3812	.3417	44.76	104.95	19.98
22	5	0	16.13	13.66	.5759	.3349	.3926	.3425	42.75	106.57	19.56
24	5	0	14.70	12.44	.5871	.3335	.4030	.3433	40.93	107.54	19.17
26	5	0	13.45	11.39	.5973	.3322	.4125	.3441	39.25	107.99	18.79
28	5	0	12.37	10.47	.6066	.3310	.4213	.3449	37.69	108.00	18.40
30	5	0	11.41	9.661	.6150	.3300	.4293	.3455	36.25	107.65	18.01
32	5	0	10.57	8.944	.6226	.3290	.4368	.3461	34.89	107.00	17.61
34	5	0	9.810	8.303	.6295	.3280	.4436	.3467	33.62	106.11	17.20
36	5	0	9.131	7.728	.6358	.3270	.4500	.3471	32.43	105.02	16.77
38	5	0	8.517	7.209	.6415	.3260	.4559	.3475	31.29	103.75	16.34
40	5	0	7.962	6.739	.6467	.3249	.4614	.3478	30.22	102.36	15.90
45	5	0	6.778	5.737	.6575	.3224	.4736	.3483	27.75	98.41	14.79
50	5	0	5.824	4.929	.6662	.3198	.4840	.3485	25.55	94.05	13.69
55	5	0	5.042	4.268	.6730	.3172	.4930	.3485	23.55	89.46	12.62
60	5	0	4.394	3.719	.6785	.3146	.5009	.3484	21.73	84.77	11.60
65	5	0	3.849	3.258	.6831	.3122	.5079	.3482	20.06	80.07	10.65
70	5	0	3.388	2.868	.6869	.3098	.5141	.3479	18.52	75.40	9.76
75	5	0	2.995	2.535	.6900	.3076	.5196	.3475	17.09	70.81	8.93
80	5	0	2.657	2.249	.6928	.3056	.5247	.3472	15.75	66.33	8.16
90	5	0	2.112	1.787	.6973	.3019	.5336	.3465	13.34	57.69	6.79
100	5	0	1.697	1.436	.7010	.2986	.5411	.3458	11.21	49.57	5.60

ILLUMINANT C

R	Y	B	T(IN)	T	1931 X	1931 Y	1960 U	1960 V	1964 W*	1964 U*	1964 V*
0	6	0	90.74	83.48	0.3784	0.4391	0.2015	0.3507	92.26	.76	52.04
1	6	0	79.90	67.63	.3910	.4282	.2126	.3493	84.85	12.97	46.27
2	6	0	70.79	59.92	.4035	.4182	.2238	.3480	80.83	24.12	42.71
3	6	0	63.11	53.41	.4158	.4091	.2350	.3468	77.15	34.23	39.60
4	6	0	56.59	47.89	.4278	.4007	.2461	.3458	73.79	43.38	36.91
5	6	0	51.03	43.19	.4395	.3932	.2570	.3449	70.71	51.62	34.59
6	6	0	46.27	39.16	.4508	.3864	.2677	.3442	67.90	59.02	32.58
7	6	0	42.16	35.68	.4618	.3804	.2782	.3437	65.31	65.65	30.86
8	6	0	38.60	32.68	.4725	.3749	.2883	.3432	62.92	71.56	29.37
9	6	0	35.51	30.05	.4827	.3701	.2982	.3429	60.73	76.82	28.10
10	6	0	32.80	27.76	.4926	.3658	.3076	.3427	58.70	81.47	27.00
11	6	0	30.41	25.74	.5020	.3620	.3167	.3426	56.81	85.59	26.06
12	6	0	28.30	23.95	.5111	.3587	.3255	.3426	55.06	89.20	25.24
13	6	0	26.42	22.36	.5198	.3557	.3338	.3426	53.43	92.37	24.53
14	6	0	24.74	20.94	.5282	.3531	.3418	.3428	51.91	95.14	23.91
15	6	0	23.23	19.67	.5361	.3507	.3495	.3429	50.48	97.54	23.37
16	6	0	21.88	18.52	.5437	.3486	.3568	.3431	49.14	99.60	22.88
17	6	0	20.64	17.47	.5510	.3468	.3638	.3434	47.87	101.38	22.45
18	6	0	19.53	16.53	.5579	.3451	.3704	.3437	46.68	102.88	22.05
19	6	0	18.50	15.66	.5646	.3436	.3767	.3439	45.55	104.14	21.69
20	6	0	17.57	14.87	.5709	.3423	.3828	.3443	44.48	105.18	21.36
22	6	0	15.91	13.47	.5826	.3399	.3941	.3449	42.48	106.70	20.74
24	6	0	14.50	12.27	.5932	.3379	.4043	.3455	40.66	107.57	20.18
26	6	0	13.27	11.23	.6029	.3362	.4138	.3461	38.99	107.92	19.65
28	6	0	12.20	10.33	.6116	.3346	.4224	.3466	37.45	107.83	19.14
30	6	0	11.26	9.531	.6195	.3332	.4303	.3471	36.01	107.40	18.63
32	6	0	10.43	8.824	.6267	.3318	.4376	.3475	34.66	106.68	18.12
34	6	0	9.679	8.192	.6332	.3305	.4444	.3479	33.40	105.72	17.62
36	6	0	9.008	7.625	.6390	.3292	.4506	.3482	32.21	104.57	17.12
38	6	0	8.403	7.113	.6443	.3279	.4565	.3485	31.08	103.26	16.62
40	6	0	7.855	6.648	.6491	.3267	.4619	.3487	30.01	101.82	16.13
45	6	0	6.687	5.659	.6593	.3236	.4739	.3489	27.55	97.80	14.91
50	6	0	5.745	4.862	.6674	.3207	.4842	.3490	25.35	93.38	13.73
55	6	0	4.973	4.209	.6738	.3178	.4931	.3489	23.37	88.76	12.62
60	6	0	4.333	3.667	.6791	.3151	.5009	.3486	21.55	84.05	11.58
65	6	0	3.795	3.212	.6834	.3126	.5078	.3483	19.89	79.35	10.60
70	6	0	3.340	2.827	.6871	.3101	.5139	.3480	18.35	74.69	9.70
75	6	0	2.952	2.499	.6902	.3079	.5195	.3476	16.92	70.11	8.87
80	6	0	2.619	2.217	.6929	.3058	.5246	.3472	15.60	65.63	8.09
90	6	0	2.081	1.761	.6973	.3020	.5334	.3465	13.19	57.03	6.72
100	6	0	1.672	1.415	.7009	.2987	.5410	.3458	11.07	48.92	5.54

ILLUMINANT C

					-----1931----		----1960-----		-------1964--------		
R	Y	B	T(IN)	T	X	Y	U	V	W*	U*	V*
0	8	0	88.19	81.13	0.3906	0.4582	0.2024	0.3562	91.23	1.88	58.01
1	8	0	77.65	65.72	.4038	.4469	.2138	.3549	83.89	14.09	51.89
2	8	0	68.80	58.23	.4168	.4364	.2252	.3537	79.90	25.26	48.16
3	8	0	61.33	51.91	.4295	.4267	.2366	.3526	76.26	35.39	44.87
4	8	0	55.00	46.55	.4418	.4178	.2478	.3516	72.93	44.54	41.98
5	8	0	49.60	41.98	.4538	.4097	.2589	.3507	69.89	52.77	39.45
6	8	0	44.97	38.06	.4653	.4024	.2698	.3500	67.10	60.16	37.23
7	8	0	40.98	34.69	.4764	.3957	.2804	.3494	64.53	66.75	35.28
8	8	0	37.53	31.77	.4871	.3897	.2907	.3489	62.18	72.62	33.58
9	8	0	34.52	29.22	.4973	.3843	.3006	.3485	60.00	77.82	32.09
10	8	0	31.89	26.99	.5070	.3794	.3102	.3481	57.99	82.41	30.77
11	8	0	29.57	25.03	.5163	.3750	.3193	.3479	56.13	86.45	29.61
12	8	0	27.52	23.30	.5252	.3711	.3281	.3477	54.40	89.99	28.59
13	8	0	25.70	21.75	.5336	.3675	.3365	.3476	52.79	93.07	27.68
14	8	0	24.07	20.37	.5416	.3643	.3445	.3476	51.28	95.75	26.86
15	8	0	22.61	19.13	.5492	.3615	.3521	.3476	49.87	98.05	26.12
16	8	0	21.29	18.02	.5565	.3589	.3594	.3477	48.54	100.02	25.45
17	8	0	20.09	17.00	.5633	.3565	.3663	.3477	47.29	101.69	24.85
18	8	0	19.00	16.08	.5698	.3544	.3729	.3478	46.11	103.10	24.28
19	8	0	18.01	15.24	.5760	.3524	.3791	.3479	44.99	104.26	23.76
20	8	0	17.10	14.47	.5818	.3506	.3851	.3481	43.93	105.21	23.28
22	8	0	15.49	13.11	.5927	.3474	.3962	.3484	41.95	106.54	22.38
24	8	0	14.12	11.95	.6024	.3446	.4063	.3487	40.15	107.24	21.58
26	8	0	12.92	10.94	.6112	.3422	.4155	.3489	38.50	107.42	20.83
28	8	0	11.88	10.06	.6191	.3399	.4239	.3492	36.96	107.20	20.12
30	8	0	10.97	9.281	.6262	.3379	.4317	.3494	35.54	106.63	19.44
32	8	0	10.15	8.592	.6326	.3360	.4388	.3496	34.20	105.80	18.79
34	8	0	9.424	7.977	.6384	.3342	.4454	.3497	32.95	104.74	18.16
36	8	0	8.771	7.424	.6436	.3325	.4515	.3498	31.77	103.50	17.55
38	8	0	8.182	6.925	.6484	.3308	.4571	.3499	30.65	102.12	16.96
40	8	0	7.647	6.472	.6527	.3293	.4624	.3499	29.59	100.61	16.39
45	8	0	6.508	5.509	.6618	.3255	.4742	.3499	27.15	96.47	15.02
50	8	0	5.590	4.731	.6691	.3221	.4842	.3497	24.97	91.99	13.75
55	8	0	4.838	4.095	.6750	.3189	.4930	.3494	23.00	87.33	12.57
60	8	0	4.214	3.566	.6798	.3159	.5007	.3490	21.20	82.61	11.48
65	8	0	3.690	3.123	.6839	.3132	.5075	.3486	19.54	77.91	10.49
70	8	0	3.247	2.748	.6873	.3106	.5136	.3482	18.02	73.26	9.57
75	8	0	2.869	2.428	.6903	.3083	.5192	.3478	16.60	68.70	8.73
80	8	0	2.544	2.153	.6929	.3061	.5242	.3473	15.28	64.24	7.95
90	8	0	2.020	1.710	.6973	.3022	.5331	.3466	12.90	55.70	6.58
100	8	0	1.622	1.373	.7008	.2989	.5407	.3459	10.79	47.65	5.41

ILLUMINANT C

R	Y	B	T(IN)	T	1931 X	1931 Y	1960 U	1960 V	1964 W*	1964 U*	1964 V*
0	10	0	85.79	78.93	0.3999	0.4720	0.2034	0.3601	90.24	2.99	61.95
1	10	0	75.54	63.93	.4136	.4604	.2149	.3589	82.97	15.12	55.60
2	10	0	66.93	56.65	.4269	.4496	.2264	.3577	79.01	26.25	51.76
3	10	0	59.67	50.50	.4398	.4395	.2379	.3566	75.41	36.33	48.35
4	10	0	53.51	45.29	.4524	.4302	.2493	.3557	72.11	45.44	45.33
5	10	0	48.26	40.84	.4645	.4217	.2606	.3548	69.10	53.62	42.65
6	10	0	43.76	37.04	.4762	.4139	.2715	.3540	66.33	60.95	40.29
7	10	0	39.88	33.76	.4873	.4068	.2822	.3534	63.80	67.47	38.20
8	10	0	36.53	30.92	.4979	.4003	.2926	.3528	61.46	73.27	36.35
9	10	0	33.60	28.44	.5081	.3944	.3025	.3523	59.31	78.40	34.71
10	10	0	31.04	26.27	.5177	.3891	.3121	.3519	57.32	82.91	33.24
11	10	0	28.79	24.37	.5268	.3843	.3213	.3516	55.48	86.87	31.94
12	10	0	26.80	22.68	.5354	.3799	.3301	.3513	53.76	90.31	30.77
13	10	0	25.02	21.18	.5436	.3760	.3384	.3511	52.17	93.31	29.72
14	10	0	23.44	19.84	.5513	.3724	.3464	.3510	50.68	95.89	28.76
15	10	0	22.01	18.63	.5586	.3691	.3540	.3509	49.28	98.10	27.90
16	10	0	20.73	17.55	.5655	.3661	.3612	.3508	47.96	99.98	27.10
17	10	0	19.57	16.56	.5721	.3634	.3681	.3507	46.72	101.57	26.38
18	10	0	18.51	15.67	.5782	.3609	.3746	.3507	45.55	102.89	25.70
19	10	0	17.54	14.85	.5841	.3586	.3808	.3507	44.45	103.97	25.07
20	10	0	16.66	14.10	.5896	.3565	.3867	.3507	43.39	104.83	24.48
22	10	0	15.09	12.77	.5997	.3527	.3976	.3508	41.44	106.00	23.40
24	10	0	13.75	11.64	.6087	.3493	.4076	.3508	39.66	106.57	22.43
26	10	0	12.59	10.66	.6168	.3463	.4166	.3509	38.01	106.62	21.53
28	10	0	11.58	9.798	.6241	.3437	.4249	.3509	36.50	106.29	20.69
30	10	0	10.68	9.041	.6306	.3412	.4325	.3510	35.08	105.63	19.90
32	10	0	9.888	8.370	.6365	.3389	.4395	.3510	33.76	104.71	19.16
34	10	0	9.180	7.770	.6419	.3368	.4459	.3510	32.52	103.58	18.45
36	10	0	8.543	7.230	.6467	.3348	.4519	.3509	31.34	102.28	17.77
38	10	0	7.968	6.744	.6510	.3329	.4574	.3509	30.23	100.84	17.11
40	10	0	7.446	6.303	.6550	.3311	.4626	.3508	29.18	99.29	16.49
45	10	0	6.336	5.363	.6634	.3269	.4742	.3505	26.76	95.07	15.02
50	10	0	5.440	4.605	.6701	.3231	.4841	.3501	24.59	90.55	13.69
55	10	0	4.707	3.984	.6756	.3197	.4928	.3497	22.63	85.88	12.47
60	10	0	4.098	3.469	.6802	.3165	.5004	.3492	20.84	81.16	11.36
65	10	0	3.588	3.037	.6841	.3136	.5072	.3488	19.20	76.46	10.35
70	10	0	3.156	2.671	.6874	.3110	.5133	.3483	17.69	71.84	9.43
75	10	0	2.788	2.359	.6903	.3086	.5188	.3479	16.28	67.30	8.58
80	10	0	2.471	2.092	.6929	.3064	.5239	.3474	14.97	62.87	7.81
90	10	0	1.962	1.660	.6972	.3024	.5328	.3466	12.60	54.38	6.44
100	10	0	1.575	1.333	.7007	.2990	.5403	.3459	10.51	46.39	5.27

ILLUMINANT C

R	Y	B	T(IN)	T	1931 X	1931 Y	1960 U	1960 V	1964 W*	1964 U*	1964 V*
0	15	0	80.33	73.90	0.4159	0.4937	0.2056	0.3660	87.91	5.39	67.11
1	15	0	70.73	59.87	.4301	.4816	.2172	.3649	80.80	17.20	60.48
2	15	0	62.68	53.05	.4439	.4702	.2290	.3638	76.94	28.09	56.50
3	15	0	55.88	47.30	.4572	.4595	.2406	.3628	73.41	37.95	52.94
4	15	0	50.12	42.42	.4700	.4496	.2522	.3618	70.19	46.82	49.74
5	15	0	45.21	38.27	.4822	.4403	.2635	.3609	67.25	54.78	46.89
6	15	0	41.00	34.70	.4939	.4318	.2746	.3601	64.55	61.88	44.33
7	15	0	37.38	31.64	.5049	.4240	.2853	.3594	62.07	68.17	42.03
8	15	0	34.24	28.98	.5154	.4168	.2957	.3587	59.79	73.74	39.97
9	15	0	31.50	26.66	.5252	.4102	.3057	.3581	57.69	78.64	38.12
10	15	0	29.11	24.63	.5345	.4042	.3153	.3576	55.74	82.92	36.45
11	15	0	27.00	22.85	.5432	.3986	.3244	.3571	53.94	86.66	34.94
12	15	0	25.13	21.27	.5514	.3936	.3332	.3567	52.27	89.89	33.56
13	15	0	23.47	19.86	.5591	.3890	.3414	.3563	50.71	92.67	32.31
14	15	0	21.98	18.61	.5663	.3847	.3493	.3560	49.25	95.04	31.17
15	15	0	20.65	17.48	.5730	.3808	.3568	.3557	47.88	97.06	30.12
16	15	0	19.45	16.46	.5793	.3773	.3639	.3554	46.60	98.75	29.15
17	15	0	18.36	15.54	.5853	.3740	.3706	.3552	45.38	100.15	28.25
18	15	0	17.37	14.70	.5908	.3709	.3770	.3550	44.24	101.29	27.41
19	15	0	16.46	13.93	.5961	.3681	.3830	.3548	43.16	102.20	26.63
20	15	0	15.63	13.23	.6010	.3654	.3888	.3546	42.13	102.91	25.90
22	15	0	14.16	11.99	.6099	.3607	.3994	.3543	40.21	103.79	24.55
24	15	0	12.90	10.92	.6179	.3565	.4090	.3540	38.46	104.10	23.34
26	15	0	11.81	9.997	.6249	.3527	.4178	.3537	36.85	103.93	22.24
28	15	0	10.86	9.190	.6312	.3494	.4258	.3535	35.36	103.40	21.23
30	15	0	10.02	8.478	.6369	.3463	.4331	.3533	33.98	102.58	20.29
32	15	0	9.270	7.846	.6419	.3435	.4398	.3530	32.68	101.52	19.41
34	15	0	8.603	7.282	.6465	.3408	.4461	.3528	31.46	100.28	18.59
36	15	0	8.004	6.775	.6507	.3384	.4519	.3525	30.30	98.89	17.82
38	15	0	7.463	6.317	.6544	.3361	.4573	.3523	29.21	97.37	17.08
40	15	0	6.972	5.901	.6579	.3340	.4623	.3521	28.18	95.77	16.39
45	15	0	5.927	5.017	.6652	.3291	.4735	.3514	25.80	91.45	14.80
50	15	0	5.085	4.304	.6713	.3249	.4833	.3508	23.67	86.89	13.39
55	15	0	4.396	3.721	.6763	.3210	.4918	.3502	21.74	82.23	12.13
60	15	0	3.824	3.237	.6805	.3176	.4994	.3497	19.98	77.54	11.00
65	15	0	3.345	2.831	.6841	.3146	.5062	.3491	18.37	72.90	9.98
70	15	0	2.940	2.489	.6873	.3118	.5123	.3486	16.88	68.33	9.05
75	15	0	2.595	2.197	.6901	.3093	.5178	.3481	15.50	63.86	8.21
80	15	0	2.299	1.946	.6926	.3069	.5229	.3476	14.21	59.50	7.44
90	15	0	1.823	1.543	.6969	.3029	.5319	.3468	11.89	51.15	6.09
100	15	0	1.461	1.237	.7004	.2994	.5395	.3460	9.84	43.31	4.95

ILLUMINANT C

R	Y	B	T(IN)	T	1931 X	1931 Y	1960 U	1960 V	1964 W*	1964 U*	1964 V*
0	20	0	75.45	69.42	0.4259	0.5057	0.2073	0.3693	85.74	7.22	69.06
1	20	0	66.45	56.24	.4403	.4933	.2191	.3682	78.78	18.64	62.34
2	20	0	58.89	49.84	.4542	.4816	.2308	.3671	75.00	29.21	58.32
3	20	0	52.51	44.44	.4676	.4706	.2425	.3661	71.55	38.76	54.71
4	20	0	47.10	39.87	.4804	.4603	.2541	.3652	68.40	47.35	51.45
5	20	0	42.49	35.96	.4926	.4507	.2655	.3643	65.52	55.02	48.52
6	20	0	38.54	32.62	.5041	.4418	.2765	.3634	62.88	61.84	45.88
7	20	0	35.14	29.74	.5150	.4335	.2872	.3627	60.45	67.88	43.50
8	20	0	32.19	27.24	.5253	.4259	.2976	.3619	58.22	73.21	41.35
9	20	0	29.62	25.07	.5349	.4189	.3075	.3613	56.17	77.87	39.40
10	20	0	27.37	23.16	.5438	.4125	.3170	.3607	54.26	81.93	37.64
11	20	0	25.39	21.49	.5522	.4066	.3261	.3601	52.50	85.45	36.03
12	20	0	23.63	20.00	.5601	.4012	.3347	.3596	50.86	88.48	34.57
13	20	0	22.07	18.68	.5674	.3962	.3429	.3591	49.33	91.07	33.22
14	20	0	20.67	17.50	.5742	.3916	.3506	.3587	47.90	93.26	31.99
15	20	0	19.42	16.44	.5806	.3874	.3580	.3583	46.56	95.11	30.85
16	20	0	18.29	15.48	.5865	.3835	.3649	.3579	45.31	96.64	29.80
17	20	0	17.26	14.61	.5921	.3799	.3716	.3576	44.12	97.90	28.82
18	20	0	16.33	13.82	.5973	.3765	.3778	.3573	43.00	98.90	27.91
19	20	0	15.48	13.10	.6021	.3734	.3837	.3570	41.93	99.69	27.06
20	20	0	14.69	12.44	.6067	.3705	.3893	.3567	40.92	100.27	26.26
22	20	0	13.31	11.26	.6149	.3652	.3998	.3562	39.04	100.95	24.79
24	20	0	12.12	10.26	.6222	.3606	.4092	.3557	37.32	101.08	23.47
26	20	0	11.09	9.391	.6287	.3564	.4177	.3553	35.74	100.77	22.28
28	20	0	10.20	8.630	.6344	.3527	.4255	.3549	34.28	100.13	21.19
30	20	0	9.403	7.959	.6396	.3493	.4327	.3545	32.91	99.20	20.18
32	20	0	8.699	7.363	.6442	.3462	.4393	.3541	31.64	98.07	19.25
34	20	0	8.070	6.831	.6484	.3433	.4454	.3538	30.43	96.76	18.37
36	20	0	7.505	6.353	.6522	.3407	.4511	.3534	29.30	95.32	17.56
38	20	0	6.995	5.921	.6557	.3382	.4564	.3531	28.23	93.77	16.79
40	20	0	6.533	5.530	.6589	.3359	.4614	.3528	27.21	92.14	16.07
45	20	0	5.548	4.696	.6658	.3306	.4725	.3520	24.86	87.80	14.44
50	20	0	4.755	4.025	.6714	.3261	.4822	.3512	22.77	83.26	13.00
55	20	0	4.107	3.476	.6762	.3221	.4907	.3506	20.87	78.62	11.73
60	20	0	3.570	3.021	.6803	.3185	.4982	.3499	19.14	73.99	10.60
65	20	0	3.120	2.641	.6838	.3153	.5050	.3493	17.55	69.41	9.58
70	20	0	2.740	2.319	.6869	.3124	.5112	.3487	16.09	64.91	8.67
75	20	0	2.417	2.045	.6897	.3098	.5167	.3482	14.73	60.51	7.84
80	20	0	2.140	1.811	.6922	.3075	.5219	.3477	13.47	56.22	7.08
90	20	0	1.694	1.434	.6965	.3033	.5309	.3469	11.19	48.02	5.75
100	20	0	1.357	1.148	.7000	.2998	.5387	.3461	9.18	40.32	4.63

ILLUMINANT C

R	Y	B	T(IN)	T	1931 X	1931 Y	1960 U	1960 V	1964 W*	1964 U*	1964 V*
0	30	0	66.96	61.61	0.4374	0.5178	0.2098	0.3726	81.74	9.52	69.35
1	30	0	58.99	49.93	.4518	.5053	.2215	.3715	75.06	20.13	62.67
2	30	0	52.29	44.26	.4657	.4934	.2332	.3705	71.43	30.02	58.71
3	30	0	46.64	39.47	.4790	.4821	.2448	.3696	68.12	38.92	55.11
4	30	0	41.84	35.42	.4916	.4714	.2563	.3686	65.10	46.89	51.86
5	30	0	37.75	31.96	.5036	.4615	.2675	.3677	62.33	53.98	48.92
6	30	0	34.25	28.99	.5148	.4522	.2784	.3668	59.80	60.26	46.25
7	30	0	31.23	26.43	.5253	.4436	.2889	.3660	57.47	65.79	43.84
8	30	0	28.61	24.21	.5352	.4357	.2991	.3652	55.33	70.64	41.64
9	30	0	26.32	22.28	.5444	.4283	.3088	.3645	53.35	74.87	39.64
10	30	0	24.32	20.59	.5529	.4216	.3181	.3638	51.52	78.52	37.82
11	30	0	22.56	19.10	.5609	.4153	.3269	.3631	49.82	81.66	36.15
12	30	0	21.00	17.77	.5682	.4095	.3353	.3625	48.24	84.35	34.63
13	30	0	19.61	16.60	.5751	.4042	.3433	.3620	46.77	86.62	33.22
14	30	0	18.37	15.55	.5814	.3993	.3509	.3614	45.39	88.52	31.93
15	30	0	17.25	14.60	.5873	.3947	.3580	.3609	44.10	90.10	30.73
16	30	0	16.24	13.75	.5928	.3905	.3648	.3604	42.89	91.39	29.62
17	30	0	15.32	12.97	.5979	.3866	.3712	.3600	41.74	92.42	28.58
18	30	0	14.49	12.27	.6027	.3830	.3773	.3596	40.65	93.23	27.62
19	30	0	13.73	11.62	.6071	.3796	.3830	.3592	39.63	93.83	26.72
20	30	0	13.03	11.03	.6112	.3764	.3884	.3588	38.65	94.25	25.87
22	30	0	11.79	9.983	.6187	.3706	.3985	.3581	36.83	94.65	24.31
24	30	0	10.73	9.086	.6253	.3655	.4077	.3575	35.17	94.55	22.92
26	30	0	9.816	8.309	.6312	.3610	.4160	.3569	33.63	94.06	21.66
28	30	0	9.013	7.629	.6364	.3569	.4236	.3563	32.21	93.27	20.52
30	30	0	8.305	7.029	.6411	.3532	.4306	.3558	30.89	92.25	19.46
32	30	0	7.676	6.497	.6453	.3498	.4370	.3553	29.65	91.03	18.49
34	30	0	7.115	6.022	.6492	.3466	.4430	.3548	28.48	89.67	17.59
36	30	0	6.611	5.595	.6527	.3437	.4486	.3544	27.38	88.19	16.76
38	30	0	6.156	5.210	.6559	.3410	.4538	.3540	26.34	86.62	15.98
40	30	0	5.744	4.861	.6588	.3385	.4587	.3536	25.35	84.98	15.24
45	30	0	4.867	4.119	.6653	.3329	.4698	.3526	23.08	80.68	13.59
50	30	0	4.163	3.523	.6707	.3280	.4795	.3518	21.04	76.21	12.16
55	30	0	3.588	3.037	.6753	.3238	.4880	.3510	19.20	71.68	10.91
60	30	0	3.112	2.634	.6793	.3201	.4957	.3503	17.53	67.17	9.79
65	30	0	2.715	2.298	.6828	.3167	.5025	.3496	15.99	62.72	8.80
70	30	0	2.381	2.015	.6859	.3137	.5088	.3490	14.58	58.35	7.91
75	30	0	2.097	1.775	.6887	.3110	.5145	.3485	13.27	54.09	7.10
80	30	0	1.854	1.569	.6912	.3085	.5197	.3480	12.05	49.95	6.37
90	30	0	1.464	1.239	.6956	.3042	.5290	.3471	9.85	42.02	5.09
100	30	0	1.170	0.9899	.6993	.3006	.5370	.3463			

ILLUMINANT C

R	Y	B	T(IN)	T	1931 X	1931 Y	1960 U	1960 V	1964 W*	1964 U*	1964 V*
0	40	0	59.75	54.97	0.4437	0.5238	0.2113	0.3742	78.05	10.62	67.88
1	40	0	52.65	44.56	.4579	.5112	.2229	.3732	71.63	20.48	61.36
2	40	0	46.68	39.51	.4716	.4993	.2344	.3722	68.15	29.69	57.49
3	40	0	41.64	35.25	.4846	.4879	.2458	.3712	64.97	37.96	53.99
4	40	0	37.37	31.63	.4970	.4772	.2571	.3703	62.06	45.34	50.81
5	40	0	33.72	28.54	.5086	.4672	.2681	.3694	59.40	51.89	47.92
6	40	0	30.59	25.89	.5195	.4579	.2787	.3685	56.96	57.67	45.30
7	40	0	27.89	23.61	.5298	.4492	.2891	.3676	54.72	62.74	42.91
8	40	0	25.55	21.62	.5393	.4411	.2990	.3668	52.65	67.17	40.74
9	40	0	23.51	19.90	.5481	.4336	.3085	.3661	50.74	71.00	38.76
10	40	0	21.72	18.38	.5564	.4267	.3176	.3653	48.98	74.31	36.95
11	40	0	20.14	17.05	.5640	.4203	.3262	.3647	47.34	77.13	35.29
12	40	0	18.74	15.86	.5711	.4144	.3344	.3640	45.81	79.53	33.77
13	40	0	17.49	14.81	.5776	.4090	.3422	.3634	44.39	81.54	32.36
14	40	0	16.38	13.86	.5837	.4039	.3495	.3628	43.06	83.22	31.06
15	40	0	15.38	13.02	.5893	.3992	.3565	.3623	41.81	84.59	29.86
16	40	0	14.47	12.25	.5945	.3949	.3631	.3617	40.63	85.69	28.75
17	40	0	13.65	11.55	.5994	.3908	.3694	.3613	39.52	86.56	27.71
18	40	0	12.90	10.92	.6039	.3871	.3753	.3608	38.47	87.22	26.74
19	40	0	12.22	10.34	.6081	.3835	.3809	.3603	37.47	87.69	25.83
20	40	0	11.59	9.812	.6120	.3802	.3862	.3599	36.52	88.00	24.97
22	40	0	10.48	8.872	.6192	.3743	.3961	.3591	34.75	88.21	23.41
24	40	0	9.530	8.066	.6255	.3690	.4051	.3584	33.14	87.96	22.01
26	40	0	8.706	7.368	.6310	.3642	.4132	.3577	31.65	87.37	20.75
28	40	0	7.985	6.758	.6360	.3599	.4207	.3571	30.27	86.51	19.60
30	40	0	7.350	6.221	.6405	.3560	.4276	.3565	28.98	85.43	18.55
32	40	0	6.786	5.744	.6446	.3525	.4340	.3560	27.77	84.18	17.58
34	40	0	6.283	5.318	.6483	.3492	.4400	.3555	26.64	82.80	16.68
36	40	0	5.832	4.936	.6517	.3462	.4455	.3550	25.57	81.32	15.85
38	40	0	5.425	4.592	.6548	.3434	.4508	.3545	24.55	79.76	15.07
40	40	0	5.057	4.280	.6577	.3407	.4557	.3541	23.59	78.14	14.35
45	40	0	4.275	3.618	.6640	.3349	.4668	.3531	21.38	73.90	12.72
50	40	0	3.648	3.087	.6694	.3298	.4765	.3522	19.40	69.53	11.32
55	40	0	3.137	2.655	.6740	.3254	.4852	.3514	17.62	65.12	10.09
60	40	0	2.716	2.299	.6781	.3215	.4930	.3506	16.00	60.74	9.00
65	40	0	2.365	2.002	.6816	.3181	.5000	.3499	14.51	56.42	8.04
70	40	0	2.070	1.752	.6848	.3149	.5064	.3493	13.14	52.19	7.17
75	40	0	1.820	1.541	.6877	.3121	.5122	.3487	11.87	48.06	6.39
80	40	0	1.607	1.360	.6902	.3096	.5175	.3482	10.70	44.05	5.69
90	40	0	1.266	1.071	.6947	.3051	.5271	.3473	8.58	36.38	4.46
100	40	0	1.009	0.8539	.6985	.3014	.5353	.3464			

ILLUMINANT C

R	Y	B	T(IN)	T	1931 X	1931 Y	1960 U	1960 V	1964 W*	1964 U*	1964 V*
0	60	0	48.05	44.21	0.4496	0.5297	0.2126	0.3758	71.40	10.92	63.56
1	60	0	42.36	35.86	.4633	.5174	.2237	.3748	65.44	19.44	57.43
2	60	0	37.58	31.81	.4764	.5057	.2348	.3739	62.21	27.44	53.82
3	60	0	33.53	28.38	.4888	.4945	.2457	.3729	59.26	34.57	50.54
4	60	0	30.10	25.47	.5006	.4840	.2565	.3720	56.56	40.91	47.55
5	60	0	27.16	22.99	.5117	.4741	.2670	.3711	54.08	46.51	44.83
6	60	0	24.63	20.85	.5221	.4648	.2772	.3702	51.81	51.42	42.35
7	60	0	22.45	19.01	.5318	.4562	.2871	.3693	49.72	55.71	40.09
8	60	0	20.56	17.40	.5408	.4481	.2965	.3685	47.79	59.43	38.03
9	60	0	18.91	16.00	.5492	.4406	.3056	.3678	46.00	62.63	36.14
10	60	0	17.46	14.78	.5570	.4337	.3142	.3670	44.35	65.36	34.41
11	60	0	16.18	13.69	.5642	.4273	.3225	.3663	42.81	67.68	32.82
12	60	0	15.04	12.73	.5709	.4213	.3303	.3656	41.38	69.62	31.36
13	60	0	14.03	11.88	.5771	.4158	.3377	.3650	40.04	71.24	30.01
14	60	0	13.12	11.11	.5829	.4106	.3448	.3644	38.78	72.56	28.76
15	60	0	12.31	10.42	.5882	.4059	.3515	.3638	37.60	73.62	27.60
16	60	0	11.57	9.795	.5931	.4014	.3578	.3632	36.49	74.46	26.52
17	60	0	10.90	9.229	.5977	.3973	.3638	.3627	35.44	75.09	25.52
18	60	0	10.30	8.714	.6020	.3934	.3695	.3622	34.45	75.54	24.58
19	60	0	9.739	8.243	.6060	.3898	.3750	.3617	33.50	75.83	23.69
20	60	0	9.228	7.811	.6098	.3864	.3801	.3613	32.60	75.98	22.87
22	60	0	8.324	7.046	.6166	.3801	.3898	.3604	30.93	75.95	21.35
24	60	0	7.550	6.391	.6227	.3746	.3985	.3596	29.39	75.53	19.99
26	60	0	6.880	5.824	.6281	.3696	.4066	.3589	27.98	74.81	18.76
28	60	0	6.296	5.329	.6329	.3651	.4139	.3582	26.67	73.87	17.65
30	60	0	5.781	4.893	.6373	.3610	.4208	.3576	25.44	72.75	16.63
32	60	0	5.325	4.507	.6413	.3573	.4272	.3570	24.30	71.49	15.69
34	60	0	4.919	4.164	.6449	.3538	.4331	.3564	23.22	70.11	14.83
36	60	0	4.556	3.856	.6483	.3506	.4387	.3559	22.20	68.66	14.03
38	60	0	4.229	3.579	.6514	.3476	.4440	.3554	21.24	67.14	13.28
40	60	0	3.933	3.329	.6543	.3448	.4490	.3549	20.33	65.57	12.58
45	60	0	3.308	2.800	.6608	.3386	.4603	.3538	18.24	61.50	11.03
50	60	0	2.809	2.378	.6663	.3333	.4703	.3529	16.37	57.34	9.69
55	60	0	2.406	2.036	.6711	.3286	.4793	.3520	14.69	53.15	8.53
60	60	0	2.074	1.756	.6753	.3244	.4873	.3512	13.16	49.00	7.51
65	60	0	1.799	1.523	.6790	.3208	.4946	.3505	11.76	44.92	6.60
70	60	0	1.569	1.328	.6823	.3174	.5013	.3498	10.48	40.94	5.79
75	60	0	1.375	1.164	.6854	.3145	.5074	.3492	9.30	37.05	5.07
80	60	0	1.210	1.024	.6881	.3118	.5130	.3487	8.20	33.28	4.41
90	60	0	0.9479	0.8023	.6928	.3070	.5230	.3477			
100	60	0	0.7520	0.6365	.6968	.3030	.5317	.3468			

ILLUMINANT C

R	Y	B	T(IN)	T	1931 X	1931 Y	1960 U	1960 V	1964 W*	1964 U*	1964 V*
0	100	0	31.86	29.31	0.4519	0.5362	0.2119	0.3771	60.08	8.62	54.53
1	100	0	28.11	23.80	.4644	.5247	.2220	.3762	54.91	15.10	49.19
2	100	0	24.95	21.12	.4764	.5136	.2321	.3753	52.10	21.15	46.07
3	100	0	22.27	18.85	.4878	.5031	.2420	.3744	49.53	26.52	43.23
4	100	0	19.99	16.92	.4986	.4931	.2518	.3736	47.18	31.24	40.63
5	100	0	18.03	15.26	.5088	.4837	.2613	.3727	45.01	35.38	38.26
6	100	0	16.34	13.83	.5183	.4749	.2706	.3719	43.01	38.99	36.10
7	100	0	14.88	12.59	.5273	.4666	.2795	.3711	41.17	42.10	34.12
8	100	0	13.61	11.52	.5356	.4589	.2882	.3703	39.46	44.78	32.30
9	100	0	12.50	10.58	.5434	.4516	.2964	.3695	37.88	47.06	30.64
10	100	0	11.52	9.749	.5506	.4448	.3043	.3688	36.41	48.98	29.11
11	100	0	10.65	9.017	.5574	.4385	.3119	.3681	35.03	50.58	27.69
12	100	0	9.885	8.367	.5636	.4326	.3191	.3675	33.75	51.90	26.39
13	100	0	9.200	7.786	.5695	.4271	.3260	.3668	32.55	52.97	25.18
14	100	0	8.585	7.267	.5749	.4220	.3326	.3662	31.42	53.82	24.06
15	100	0	8.032	6.799	.5800	.4172	.3389	.3656	30.36	54.47	23.01
16	100	0	7.533	6.376	.5848	.4127	.3448	.3651	29.36	54.94	22.04
17	100	0	7.080	5.992	.5892	.4085	.3505	.3645	28.41	55.27	21.13
18	100	0	6.667	5.643	.5934	.4046	.3559	.3640	27.51	55.46	20.28
19	100	0	6.290	5.324	.5973	.4008	.3611	.3635	26.65	55.53	19.48
20	100	0	5.944	5.031	.6009	.3973	.3661	.3631	25.84	55.50	18.73
22	100	0	5.333	4.514	.6077	.3909	.3754	.3622	24.32	55.17	17.35
24	100	0	4.811	4.072	.6137	.3851	.3839	.3614	22.92	54.56	16.11
26	100	0	4.361	3.691	.6191	.3798	.3919	.3606	21.64	53.72	14.99
28	100	0	3.969	3.360	.6240	.3750	.3992	.3599	20.44	52.72	13.97
30	100	0	3.626	3.069	.6285	.3707	.4061	.3592	19.33	51.58	13.05
32	100	0	3.324	2.813	.6327	.3666	.4126	.3586	18.29	50.34	12.20
34	100	0	3.055	2.586	.6365	.3629	.4186	.3580	17.31	49.02	11.41
36	100	0	2.816	2.383	.6400	.3594	.4244	.3574	16.39	47.63	10.68
38	100	0	2.601	2.202	.6433	.3562	.4298	.3569	15.52	46.20	10.01
40	100	0	2.409	2.039	.6464	.3531	.4350	.3564	14.70	44.74	9.38
45	100	0	2.004	1.696	.6533	.3463	.4468	.3552	12.82	40.97	7.98
50	100	0	1.685	1.426	.6593	.3404	.4574	.3542	11.14	37.15	6.79
55	100	0	1.430	1.210	.6645	.3352	.4669	.3533	9.64	33.34	5.76
60	100	0	1.222	1.034	.6692	.3306	.4755	.3524	8.28	29.58	4.85
65	100	0	1.052	0.8902	.6733	.3265	.4834	.3516			
70	100	0	0.9104	0.7706	.6770	.3228	.4906	.3509			
75	100	0	0.7922	0.6705	.6804	.3194	.4973	.3502			
80	100	0	0.6926	0.5863	.6834	.3164	.5034	.3496			
90	100	0	0.5361	0.4537	.6888	.3111	.5144	.3485			
00	100	0	0.4208	0.3562	.6933	.3066	.5239	.3476			

ILLUMINANT C

R	Y	B	T(IN)	T	1931 X	1931 Y	1960 U	1960 V	1964 W*	1964 U*	1964 V*
0	0	0	100.0	100.0	0.3101	0.3163	0.2009	0.3073	99.04	0.00	0.00
0	0	1	84.28	77.54	.2916	.2987	.1943	.2987	89.61	-7.62	-10.09
0	0	2	71.32	65.62	.2741	.2806	.1884	.2893	83.83	-13.54	-19.60
0	0	3	60.59	55.75	.2580	.2622	.1833	.2794	78.50	-17.97	-28.47
0	0	4	51.69	47.56	.2432	.2439	.1788	.2690	73.57	-21.10	-36.64
0	0	5	44.28	40.73	.2299	.2261	.1751	.2582	69.02	-23.14	-44.06
0	0	6	38.08	35.04	.2181	.2088	.1721	.2471	64.81	-24.25	-50.71
0	0	7	32.89	30.26	.2077	.1924	.1698	.2359	60.91	-24.61	-56.56
0	0	8	28.53	26.25	.1986	.1769	.1681	.2246	57.30	-24.38	-61.61
0	0	9	24.85	22.86	.1908	.1625	.1671	.2134	53.96	-23.69	-65.86
0	0	10	21.74	20.00	.1842	.1492	.1666	.2024	50.86	-22.65	-69.37
0	0	12	16.85	15.51	.1738	.1258	.1670	.1813	45.34	-19.96	-74.26
0	0	14	13.29	12.23	.1665	.1065	.1688	.1619	40.60	-16.92	-76.72
0	0	16	10.66	9.811	.1615	.0908	.1715	.1446	36.52	-13.93	-77.25
0	0	18	8.701	8.005	.1582	.0781	.1747	.1294	33.01	-11.21	-76.36
0	0	20	7.216	6.639	.1560	.0679	.1782	.1163	29.99	-8.83	-74.48
0	0	25	4.830	4.444	.1537	.0502	.1866	.0914	24.10	-4.46	-67.66
0	0	30	3.509	3.228	.1535	.0396	.1938	.0751	19.95	-1.82	-60.23
0	0	40	2.205	2.028	.1549	.0288	.2042	.0569	14.65	.63	-47.69
0	0	50	1.591	1.464	.1566	.0236	.2109	.0476	11.38	1.49	-38.43
0	1	0	98.20	90.35	.3264	.3475	.2003	.3199	95.18	-.67	15.60
0	1	1	82.68	69.98	.3076	.3316	.1933	.3126	86.02	-8.44	5.96
0	1	2	69.88	59.15	.2896	.3148	.1869	.3047	80.41	-14.60	-2.72
0	1	3	59.29	50.18	.2726	.2972	.1811	.2962	75.21	-19.32	-10.92
0	1	4	50.50	42.74	.2568	.2792	.1760	.2870	70.41	-22.77	-18.58
0	1	5	43.18	36.55	.2423	.2612	.1715	.2774	65.97	-25.14	-25.66
0	1	6	37.08	31.38	.2292	.2434	.1678	.2674	61.85	-26.57	-32.13
0	1	7	31.96	27.05	.2174	.2261	.1648	.2570	58.05	-27.24	-37.95
0	1	8	27.66	23.41	.2070	.2095	.1624	.2465	54.52	-27.27	-43.13
0	1	9	24.04	20.34	.1979	.1937	.1606	.2358	51.25	-26.80	-47.64
0	1	10	20.97	17.75	.1900	.1789	.1595	.2252	48.22	-25.94	-51.50
0	1	12	16.17	13.68	.1774	.1522	.1587	.2042	42.79	-23.45	-57.34
0	1	14	12.67	10.72	.1684	.1297	.1596	.1844	38.13	-20.45	-60.92
0	1	16	10.09	8.541	.1620	.1109	.1617	.1661	34.10	-17.35	-62.60
0	1	18	8.170	6.915	.1577	.0956	.1646	.1497	30.63	-14.43	-62.77
0	1	20	6.720	5.688	.1548	.0831	.1679	.1352	27.63	-11.82	-61.83
0	1	25	4.403	3.727	.1515	.0611	.1767	.1068	21.76	-6.84	-56.72
0	1	30	3.132	2.651	.1509	.0478	.1846	.0876	17.60	-3.73	-50.26
0	1	40	1.898	1.606	.1523	.0340	.1963	.0658	12.28	-.72	-38.56
0	1	50	1.332	1.128	.1542	.0275	.2042	.0546	9.02	.39	-29.64

ILLUMINANT C

	Y	B	T(IN)	T	1931 X	1931 Y	1960 U	1960 V	1964 W*	1964 U*	1964 V*
0	2	0	96.54	88.82	0.3403	0.3733	0.2002	0.3294	94.54	-.80	27.16
0	2	1	81.21	68.73	.3216	.3593	.1929	.3233	85.41	-8.87	17.74
0	2	2	68.56	58.03	.3034	.3441	.1861	.3165	79.79	-15.35	9.57
0	2	3	58.11	49.18	.2860	.3278	.1798	.3092	74.59	-20.40	1.80
0	2	4	49.43	41.84	.2695	.3108	.1742	.3012	69.79	-24.20	-5.53
0	2	5	42.21	35.73	.2542	.2932	.1692	.2927	65.34	-26.89	-12.40
0	2	6	36.18	30.62	.2401	.2755	.1649	.2837	61.22	-28.65	-18.76
0	2	7	31.14	26.35	.2273	.2579	.1612	.2744	57.40	-29.61	-24.59
0	2	8	26.90	22.77	.2158	.2407	.1582	.2647	53.85	-29.89	-29.86
0	2	9	23.33	19.74	.2055	.2241	.1558	.2547	50.57	-29.64	-34.58
0	2	10	20.31	17.19	.1965	.2081	.1540	.2446	47.52	-28.97	-38.72
0	2	12	15.58	13.19	.1818	.1789	.1520	.2244	42.06	-26.70	-45.33
0	2	14	12.14	10.28	.1710	.1535	.1520	.2047	37.35	-23.74	-49.83
0	2	16	9.612	8.135	.1632	.1320	.1533	.1860	33.28	-20.57	-52.47
0	2	18	7.730	6.543	.1578	.1140	.1557	.1688	29.76	-17.47	-53.57
0	2	20	6.314	5.344	.1541	.0992	.1587	.1533	26.71	-14.63	-53.47
0	2	25	4.059	3.436	.1496	.0727	.1674	.1221	20.72	-9.01	-49.90
0	2	30	2.833	2.398	.1486	.0565	.1758	.1003	16.46	-5.37	-44.31
0	2	40	1.660	1.405	.1499	.0396	.1888	.0748	11.00	-1.73	-33.26
0	2	50	1.136	0.9615	.1520	.0316	.1976	.0617			
0	3	0	94.98	87.38	.3521	.3946	.2003	.3367	93.94	-.63	35.92
0	3	1	79.83	67.57	.3337	.3826	.1928	.3316	84.83	-8.89	26.73
0	3	2	67.34	57.00	.3156	.3692	.1857	.3258	79.21	-15.60	19.03
0	3	3	57.02	48.26	.2981	.3544	.1791	.3194	74.02	-20.91	11.67
0	3	4	48.45	41.01	.2813	.3386	.1731	.3125	69.21	-24.97	4.68
0	3	5	41.32	34.97	.2655	.3220	.1677	.3051	64.76	-27.93	-1.91
0	3	6	35.37	29.94	.2507	.3048	.1629	.2971	60.63	-29.96	-8.07
0	3	7	30.40	25.73	.2370	.2875	.1587	.2886	56.80	-31.16	-13.79
0	3	8	26.22	22.19	.2246	.2701	.1551	.2798	53.25	-31.69	-19.04
0	3	9	22.70	19.21	.2134	.2531	.1521	.2707	49.95	-31.65	-23.80
0	3	10	19.72	16.69	.2034	.2365	.1498	.2613	46.89	-31.14	-28.07
0	3	12	15.07	12.75	.1868	.2054	.1467	.2421	41.41	-29.14	-35.12
0	3	14	11.68	9.890	.1742	.1777	.1457	.2229	36.66	-26.30	-40.25
0	3	16	9.202	7.788	.1650	.1537	.1462	.2043	32.56	-23.13	-43.61
0	3	18	7.358	6.228	.1584	.1333	.1480	.1867	29.00	-19.94	-45.45
0	3	20	5.972	5.055	.1538	.1162	.1506	.1706	25.91	-16.94	-46.05
0	3	25	3.775	3.196	.1479	.0851	.1588	.1371	19.82	-10.83	-43.87
0	3	30	2.590	2.192	.1464	.0658	.1675	.1129	15.47	-6.72	-39.11
0	3	40	1.471	1.245	.1475	.0455	.1815	.0840	9.90	-2.49	-28.74
0	3	50	0.9828	0.8318	.1498	.0359	.1913	.0689			

ILLUMINANT C

R	Y	B	T(IN)	T	1931 X	1931 Y	1960 U	1960 V	1964 W*	1964 U*	1964 V*
0	4	0	93.50	86.02	0.3623	0.4122	0.2006	0.3425	93.36	-.26	42.65
0	4	1	78.54	66.47	.3443	.4021	.1929	.3381	84.27	-8.67	33.68
0	4	2	66.20	56.03	.3264	.3905	.1857	.3331	78.66	-15.55	26.39
0	4	3	56.00	47.40	.3089	.3773	.1788	.3276	73.47	-21.04	19.41
0	4	4	47.54	40.24	.2921	.3630	.1725	.3216	68.67	-25.29	12.76
0	4	5	40.50	34.28	.2759	.3475	.1668	.3150	64.21	-28.47	6.45
0	4	6	34.63	29.31	.2607	.3313	.1616	.3080	60.08	-30.70	.51
0	4	7	29.72	25.15	.2464	.3145	.1569	.3004	56.25	-32.12	-5.04
0	4	8	25.60	21.67	.2333	.2974	.1529	.2924	52.69	-32.85	-10.19
0	4	9	22.13	18.73	.2213	.2804	.1495	.2841	49.39	-32.99	-14.92
0	4	10	19.20	16.25	.2105	.2635	.1466	.2754	46.32	-32.66	-19.21
0	4	12	14.61	12.37	.1922	.2313	.1426	.2574	40.81	-30.92	-26.48
0	4	14	11.28	9.550	.1780	.2018	.1406	.2390	36.04	-28.24	-32.01
0	4	16	8.844	7.486	.1674	.1756	.1403	.2208	31.90	-25.13	-35.89
0	4	18	7.036	5.955	.1596	.1530	.1413	.2032	28.31	-21.91	-38.31
0	4	20	5.679	4.807	.1541	.1338	.1434	.1868	25.19	-18.82	-39.48
0	4	25	3.536	2.993	.1467	.0982	.1511	.1516	19.03	-12.32	-38.51
0	4	30	2.387	2.021	.1445	.0756	.1597	.1254	14.61	-7.82	-34.54
0	4	40	1.318	1.115	.1454	.0517	.1746	.0932	8.93	-3.05	-24.85
0	4	50	0.8603	0.7282	.1478	.0405	.1853	.0761			
0	5	0	92.09	84.73	.3709	.4269	.2010	.3470	92.80	.21	47.90
0	5	1	77.31	65.43	.3534	.4185	.1932	.3433	83.74	-8.30	39.13
0	5	2	65.12	55.11	.3359	.4086	.1858	.3390	78.14	-15.28	32.20
0	5	3	55.04	46.59	.3186	.3971	.1788	.3343	72.96	-20.90	25.55
0	5	4	46.69	39.52	.3018	.3842	.1723	.3290	68.15	-25.31	19.20
0	5	5	39.74	33.63	.2855	.3701	.1663	.3232	63.70	-28.65	13.16
0	5	6	33.94	28.73	.2700	.3549	.1608	.3169	59.57	-31.05	7.45
0	5	7	29.10	24.63	.2554	.3390	.1558	.3102	55.74	-32.65	2.08
0	5	8	25.03	21.18	.2418	.3225	.1514	.3030	52.17	-33.54	-2.93
0	5	9	21.61	18.29	.2292	.3058	.1476	.2954	48.87	-33.85	-7.57
0	5	10	18.72	15.84	.2176	.2890	.1443	.2874	45.79	-33.67	-11.83
0	5	12	14.20	12.02	.1979	.2562	.1394	.2707	40.26	-32.18	-19.17
0	5	14	10.92	9.247	.1822	.2254	.1365	.2532	35.47	-29.68	-24.94
0	5	16	8.528	7.218	.1702	.1975	.1354	.2356	31.31	-26.66	-29.19
0	5	18	6.752	5.715	.1613	.1730	.1357	.2183	27.70	-23.45	-32.04
0	5	20	5.423	4.590	.1548	.1518	.1372	.2018	24.55	-20.31	-33.67
0	5	25	3.331	2.819	.1458	.1117	.1440	.1656	18.32	-13.53	-33.75
0	5	30	2.216	1.876	.1428	.0859	.1525	.1377	13.83	-8.69	-30.51
0	5	40	1.191	1.008	.1433	.0582	.1680	.1024	8.06	-3.44	-21.49
0	5	50	0.7606	0.6438	.1459	.0452	.1795	.0834			

ILLUMINANT C

R	Y	B	T(IN)	T	1931 X	1931 Y	1960 U	1960 V	1964 W*	1964 U*	1964 V*
0	6	0	90.74	83.48	0.3784	0.4391	0.2015	0.3507	92.26	.76	52.04
0	6	1	76.13	64.44	.3614	.4323	.1936	.3475	83.23	-7.83	43.45
0	6	2	64.09	54.24	.3443	.4240	.1861	.3438	77.64	-14.89	36.82
0	6	3	54.13	45.82	.3273	.4140	.1790	.3397	72.46	-20.60	30.47
0	6	4	45.88	38.83	.3106	.4026	.1723	.3350	67.66	-25.12	24.39
0	6	5	39.02	33.03	.2944	.3899	.1661	.3299	63.21	-28.59	18.60
0	6	6	33.30	28.18	.2787	.3760	.1603	.3244	59.08	-31.12	13.11
0	6	7	28.51	24.13	.2639	.3610	.1551	.3183	55.25	-32.85	7.92
0	6	8	24.50	20.74	.2499	.3454	.1504	.3119	51.68	-33.89	3.05
0	6	9	21.13	17.88	.2368	.3292	.1463	.3050	48.37	-34.34	-1.48
0	6	10	18.28	15.47	.2248	.3127	.1426	.2977	45.29	-34.29	-5.67
0	6	12	13.82	11.70	.2037	.2799	.1370	.2822	39.75	-33.03	-12.99
0	6	14	10.60	8.973	.1868	.2483	.1333	.2658	34.95	-30.71	-18.88
0	6	16	8.244	6.977	.1735	.2191	.1314	.2489	30.77	-27.80	-23.37
0	6	18	6.500	5.502	.1634	.1929	.1310	.2321	27.13	-24.63	-26.55
0	6	20	5.197	4.399	.1559	.1700	.1319	.2157	23.96	-21.48	-28.54
0	6	25	3.152	2.668	.1453	.1257	.1378	.1788	17.67	-14.50	-29.51
0	6	30	2.069	1.751	.1414	.0966	.1459	.1496	13.13	-9.38	-26.94
0	6	40	1.084	0.9173	.1415	.0650	.1618	.1115			
0	6	50	0.6782	0.5740	.1442	.0501	.1741	.0907			
0	8	0	88.19	81.13	.3906	.4582	.2024	.3562	91.23	1.88	58.01
0	8	1	73.91	62.56	.3745	.4540	.1945	.3538	82.25	-6.76	49.72
0	8	2	62.16	52.61	.3582	.4484	.1869	.3510	76.68	-13.89	43.57
0	8	3	52.44	44.38	.3419	.4413	.1797	.3479	71.52	-19.71	37.69
0	8	4	44.39	37.57	.3257	.4327	.1728	.3443	66.73	-24.36	32.06
0	8	5	37.70	31.91	.3098	.4226	.1663	.3403	62.29	-27.99	26.68
0	8	6	32.12	27.18	.2943	.4111	.1602	.3358	58.17	-30.71	21.57
0	8	7	27.45	23.24	.2793	.3985	.1547	.3310	54.34	-32.64	16.73
0	8	8	23.54	19.93	.2649	.3848	.1495	.3257	50.78	-33.89	12.16
0	8	9	20.26	17.15	.2513	.3701	.1449	.3201	47.47	-34.55	7.86
0	8	10	17.49	14.80	.2385	.3549	.1407	.3140	44.38	-34.71	3.85
0	8	12	13.16	11.14	.2157	.3232	.1338	.3008	38.83	-33.84	-3.29
0	8	14	10.03	8.491	.1966	.2914	.1288	.2865	34.00	-31.85	-9.22
0	8	16	7.750	6.560	.1811	.2607	.1256	.2713	29.80	-29.16	-13.96
0	8	18	6.067	5.135	.1688	.2322	.1239	.2557	26.13	-26.13	-17.54
0	8	20	4.812	4.073	.1594	.2064	.1237	.2401	22.93	-23.01	-20.04
0	8	25	2.854	2.416	.1453	.1546	.1273	.2032	16.54	-15.82	-22.39
0	8	30	1.829	1.548	.1395	.1190	.1345	.1721	11.92	-10.29	-20.95
0	8	40	0.9143	0.7738	.1384	.0792	.1506	.1294			
0	8	50	0.5506	0.4660	.1412	.0603	.1641	.1051			

ILLUMINANT C

R	Y	B	T(IN)	T	1931 X	1931 Y	1960 U	1960 V	1964 W*	1964 U*	1964 V*
0	10	0	85.79	78.93	0.3999	0.4720	0.2034	0.3601	90.24	2.99	61.95
0	10	1	71.85	60.81	.3847	.4700	.1955	.3583	81.31	-5.66	53.88
0	10	2	60.36	51.09	.3692	.4666	.1879	.3561	75.77	-12.79	48.10
0	10	3	50.88	43.06	.3536	.4618	.1806	.3537	70.63	-18.64	42.56
0	10	4	43.02	36.41	.3381	.4556	.1736	.3509	65.86	-23.36	37.28
0	10	5	36.49	30.88	.3226	.4479	.1670	.3477	61.43	-27.07	32.23
0	10	6	31.04	26.28	.3075	.4388	.1607	.3441	57.32	-29.89	27.43
0	10	7	26.50	22.43	.2926	.4284	.1549	.3402	53.50	-31.95	22.87
0	10	8	22.69	19.20	.2783	.4168	.1495	.3359	49.95	-33.33	18.55
0	10	9	19.49	16.49	.2645	.4040	.1446	.3312	46.64	-34.14	14.48
0	10	10	16.79	14.21	.2514	.3904	.1400	.3261	43.55	-34.44	10.66
0	10	12	12.58	10.65	.2275	.3611	.1323	.3150	38.00	-33.87	3.78
0	10	14	9.544	8.078	.2068	.3302	.1263	.3025	33.16	-32.14	-2.06
0	10	16	7.332	6.206	.1895	.2994	.1220	.2891	28.94	-29.67	-6.86
0	10	18	5.704	4.828	.1755	.2697	.1192	.2749	25.25	-26.79	-10.63
0	10	20	4.494	3.804	.1643	.2419	.1179	.2604	22.02	-23.76	-13.43
0	10	25	2.615	2.213	.1466	.1840	.1193	.2246	15.58	-16.51	-16.74
0	10	30	1.641	1.389	.1387	.1424	.1252	.1928	10.89	-10.71	-16.21
0	10	40	0.7863	0.6655	.1361	.0943	.1410	.1466			
0	10	50	0.4572	0.3869	.1389	.0710	.1555	.1192			
0	15	0	80.33	73.90	.4159	.4937	.2056	.3660	87.91	5.39	67.11
0	15	1	67.17	56.85	.4024	.4951	.1978	.3651	79.13	-3.14	59.44
0	15	2	56.33	47.68	.3886	.4955	.1903	.3639	73.65	-10.13	54.23
0	15	3	47.39	40.11	.3747	.4948	.1830	.3626	68.58	-15.91	49.26
0	15	4	39.98	33.84	.3606	.4930	.1760	.3610	63.86	-20.61	44.54
0	15	5	33.83	28.63	.3466	.4899	.1694	.3591	59.48	-24.36	40.04
0	15	6	28.71	24.30	.3326	.4856	.1630	.3570	55.41	-27.27	35.77
0	15	7	24.43	20.68	.3188	.4800	.1570	.3546	51.62	-29.44	31.71
0	15	8	20.85	17.65	.3051	.4731	.1513	.3519	48.09	-30.98	27.86
0	15	9	17.85	15.11	.2918	.4649	.1460	.3489	44.80	-31.96	24.21
0	15	10	15.32	12.97	.2788	.4556	.1410	.3456	41.73	-32.47	20.78
0	15	12	11.38	9.636	.2543	.4338	.1321	.3382	36.20	-32.33	14.51
0	15	14	8.555	7.241	.2319	.4085	.1247	.3295	31.37	-31.04	9.06
0	15	16	6.501	5.503	.2121	.3809	.1187	.3198	27.14	-28.97	4.40
0	15	18	4.997	4.229	.1950	.3522	.1141	.3091	23.43	-26.43	.54
0	15	20	3.884	3.287	.1805	.3234	.1108	.2976	20.17	-23.63	-2.55
0	15	25	2.174	1.840	.1550	.2567	.1075	.2669	13.64	-16.56	-7.16
0	15	30	1.306	1.105	.1414	.2030	.1098	.2364	8.85	-10.48	-8.16
0	15	40	0.5725	0.4845	.1340	.1348	.1232	.1859			
0	15	50	0.3082	0.2609	.1367	.1000	.1392	.1528			

ILLUMINANT C

R	Y	B	T(IN)	T	1931 X	1931 Y	1960 U	1960 V	1964 W*	1964 U*	1964 V*
0	20	0	75.45	69.42	0.4259	0.5057	0.2073	0.3693	85.74	7.22	69.06
0	20	1	63.02	53.34	.4136	.5090	.1998	.3688	77.11	-1.11	61.64
0	20	2	52.78	44.68	.4011	.5117	.1924	.3682	71.71	-7.89	56.76
0	20	3	44.34	37.53	.3884	.5135	.1853	.3674	66.70	-13.51	52.12
0	20	4	37.34	31.61	.3757	.5144	.1784	.3665	62.05	-18.09	47.73
0	20	5	31.54	26.70	.3629	.5143	.1719	.3654	57.72	-21.76	43.55
0	20	6	26.72	22.61	.3501	.5131	.1656	.3640	53.69	-24.63	39.59
0	20	7	22.69	19.20	.3374	.5109	.1596	.3625	49.95	-26.80	35.84
0	20	8	19.32	16.35	.3248	.5076	.1539	.3608	46.45	-28.36	32.28
0	20	9	16.49	13.96	.3123	.5030	.1485	.3588	43.20	-29.40	28.92
0	20	10	14.12	11.95	.3001	.4974	.1434	.3566	40.16	-29.98	25.74
0	20	12	10.43	8.825	.2765	.4828	.1342	.3515	34.66	-30.03	19.92
0	20	14	7.779	6.585	.2544	.4641	.1262	.3455	29.86	-28.97	14.81
0	20	16	5.864	4.963	.2340	.4420	.1195	.3384	25.65	-27.14	10.37
0	20	18	4.466	3.780	.2156	.4172	.1139	.3305	21.94	-24.82	6.60
0	20	20	3.436	2.909	.1994	.3909	.1094	.3216	18.69	-22.22	3.48
0	20	25	1.868	1.581	.1685	.3237	.1029	.2966	12.12	-15.44	-1.68
0	20	30	1.084	0.9178	.1498	.2633	.1023	.2696			
0	20	40	0.4418	0.3740	.1371	.1781	.1128	.2197			
0	20	50	0.2230	0.1887	.1395	.1316	.1298	.1836			
0	30	0	66.96	61.61	.4374	.5178	.2098	.3726	81.74	9.52	69.35
0	30	1	55.84	47.26	.4267	.5231	.2026	.3726	73.39	1.67	62.28
0	30	2	46.69	39.52	.4159	.5280	.1956	.3725	68.15	-4.64	57.77
0	30	3	39.14	33.12	.4050	.5323	.1889	.3723	63.29	-9.86	53.51
0	30	4	32.89	27.84	.3941	.5361	.1824	.3721	58.77	-14.13	49.47
0	30	5	27.71	23.45	.3832	.5392	.1761	.3717	54.56	-17.56	45.66
0	30	6	23.41	19.81	.3723	.5416	.1701	.3712	50.65	-20.25	42.05
0	30	7	19.82	16.77	.3614	.5432	.1644	.3706	47.00	-22.29	38.63
0	30	8	16.82	14.24	.3507	.5440	.1589	.3698	43.59	-23.77	35.41
0	30	9	14.31	12.11	.3400	.5440	.1537	.3689	40.41	-24.77	32.35
0	30	10	12.20	10.33	.3295	.5431	.1488	.3679	37.44	-25.35	29.47
0	30	12	8.932	7.560	.3089	.5386	.1397	.3653	32.07	-25.49	24.19
0	30	14	6.598	5.584	.2892	.5304	.1317	.3622	27.35	-24.61	19.52
0	30	16	4.917	4.161	.2704	.5186	.1246	.3584	23.21	-23.02	15.41
0	30	18	3.696	3.128	.2528	.5035	.1184	.3539	19.56	-20.96	11.85
0	30	20	2.803	2.373	.2364	.4854	.1132	.3487	16.34	-18.62	8.80
0	30	25	1.460	1.236	.2020	.4309	.1040	.3329	9.83	-12.37	3.27
0	30	30	0.8056	0.6818	.1776	.3710	.1001	.3137			
0	30	40	0.2931	0.2480	.1571	.2665	.1068	.2717			
0	30	50	0.1334	0.1129	.1609	.1994	.1269	.2359			

ILLUMINANT C

R	Y	B	T(IN)	T	1931 X	1931 Y	1960 U	1960 V	1964 W*	1964 U*	1964 V*
0	40	0	59.75	54.97	0.4437	0.5238	0.2113	0.3742	78.05	10.62	67.88
0	40	1	49.77	42.13	.4340	.5298	.2045	.3744	69.99	3.28	61.07
0	40	2	41.56	35.18	.4242	.5356	.1978	.3746	64.92	-2.58	56.78
0	40	3	34.80	29.45	.4145	.5410	.1914	.3747	60.20	-7.41	52.74
0	40	4	29.20	24.72	.4048	.5460	.1852	.3747	55.82	-11.36	48.92
0	40	5	24.56	20.79	.3951	.5505	.1793	.3747	51.74	-14.52	45.30
0	40	6	20.71	17.53	.3855	.5545	.1736	.3745	47.94	-16.99	41.89
0	40	7	17.50	14.81	.3760	.5580	.1682	.3743	44.39	-18.87	38.67
0	40	8	14.82	12.54	.3666	.5608	.1630	.3740	41.09	-20.22	35.63
0	40	9	12.58	10.64	.3573	.5630	.1581	.3736	37.99	-21.13	32.75
0	40	10	10.70	9.053	.3482	.5646	.1534	.3731	35.10	-21.65	30.04
0	40	12	7.784	6.588	.3304	.5656	.1448	.3719	29.87	-21.76	25.06
0	40	14	5.711	4.833	.3134	.5637	.1372	.3701	25.27	-20.92	20.64
0	40	16	4.223	3.574	.2970	.5589	.1304	.3680	21.22	-19.44	16.74
0	40	18	3.146	2.663	.2816	.5510	.1245	.3653	17.65	-17.53	13.32
0	40	20	2.363	2.000	.2670	.5402	.1194	.3622	14.50	-15.36	10.35
0	40	25	1.195	1.011	.2351	.5020	.1100	.3521	8.09	-9.57	4.71
0	40	30	0.6358	0.5382	.2111	.4522	.1055	.3390			
0	40	40	0.2127	0.1800	.1903	.3464	.1124	.3067			
0	40	50	0.0895	0.0758	.2009	.2658	.1389	.2756			
0	60	0	48.05	44.21	.4496	.5297	.2126	.3758	71.40	10.92	63.56
0	60	1	39.98	33.84	.4411	.5362	.2063	.3762	63.87	4.52	57.18
0	60	2	33.35	28.23	.4327	.5425	.2002	.3765	59.12	-.50	53.20
0	60	3	27.88	23.59	.4244	.5486	.1943	.3769	54.70	-4.63	49.45
0	60	4	23.35	19.77	.4161	.5544	.1887	.3771	50.60	-7.98	45.91
0	60	5	19.61	16.59	.4080	.5598	.1833	.3773	46.77	-10.65	42.57
0	60	6	16.49	13.96	.4000	.5649	.1782	.3775	43.20	-12.72	39.41
0	60	7	13.90	11.77	.3922	.5697	.1733	.3776	39.86	-14.27	36.43
0	60	8	11.74	9.939	.3846	.5740	.1687	.3777	36.75	-15.36	33.62
0	60	9	9.937	8.410	.3772	.5780	.1643	.3777	33.84	-16.08	30.96
0	60	10	8.424	7.130	.3699	.5814	.1602	.3777	31.12	-16.46	28.46
0	60	12	6.086	5.151	.3560	.5870	.1526	.3774	26.18	-16.43	23.85
0	60	14	4.427	3.747	.3429	.5906	.1459	.3769	21.83	-15.60	19.75
0	60	16	3.242	2.744	.3307	.5922	.1400	.3762	18.00	-14.23	16.12
0	60	18	2.389	2.022	.3193	.5916	.1350	.3752	14.61	-12.51	12.89
0	60	20	1.771	1.499	.3087	.5889	.1307	.3739	11.61	-10.60	10.06
0	60	25	0.8622	0.7298	.2863	.5726	.1231	.3695			
0	60	30	0.4375	0.3703	.2705	.5431	.1205	.3630			
0	60	40	0.1304	0.1104	.2670	.4557	.1346	.3446			
0	60	50	0.0493	0.0417	.3056	.3646	.1807	.3234			

ILLUMINANT C

R	Y	B	T(IN)	T	1931 X	1931 Y	1960 U	1960 V	1964 W*	1964 U*	1964 V*
0	100	0	31.86	29.31	0.4519	0.5362	0.2119	0.3771	60.08	8.62	54.53
0	100	1	26.50	22.43	.4447	.5425	.2064	.3776	53.51	3.84	48.87
0	100	2	22.09	18.70	.4378	.5486	.2011	.3780	49.35	.15	45.35
0	100	3	18.45	15.62	.4309	.5545	.1960	.3784	45.49	-2.85	42.04
0	100	4	15.44	13.07	.4242	.5602	.1912	.3788	41.89	-5.25	38.91
0	100	5	12.95	10.96	.4177	.5656	.1867	.3791	38.53	-7.12	35.96
0	100	6	10.87	9.203	.4115	.5708	.1823	.3794	35.39	-8.53	33.17
0	100	7	9.148	7.743	.4054	.5757	.1782	.3797	32.46	-9.55	30.54
0	100	8	7.709	6.525	.3996	.5804	.1744	.3799	29.72	-10.22	28.05
0	100	9	6.507	5.508	.3940	.5847	.1708	.3801	27.15	-10.62	25.71
0	100	10	5.501	4.656	.3887	.5887	.1674	.3803	24.75	-10.76	23.49
0	100	12	3.949	3.342	.3787	.5957	.1613	.3806	20.38	-10.48	19.42
0	100	14	2.850	2.412	.3698	.6014	.1561	.3808	16.53	-9.62	15.78
0	100	16	2.068	1.750	.3619	.6058	.1517	.3808	13.13	-8.39	12.54
0	100	18	1.508	1.276	.3551	.6087	.1480	.3807	10.12	-6.95	9.65
0	100	20	1.105	0.9350	.3492	.6102	.1452	.3804			
0	100	25	0.5180	0.4385	.3395	.6074	.1413	.3792			
0	100	30	0.2506	0.2121	.3378	.5940	.1429	.3770			
0	100	40	0.0660	0.0559	.3701	.5298	.1718	.3689			
0	100	50	0.0222	0.0188	.4567	.4302	.2520	.3561			

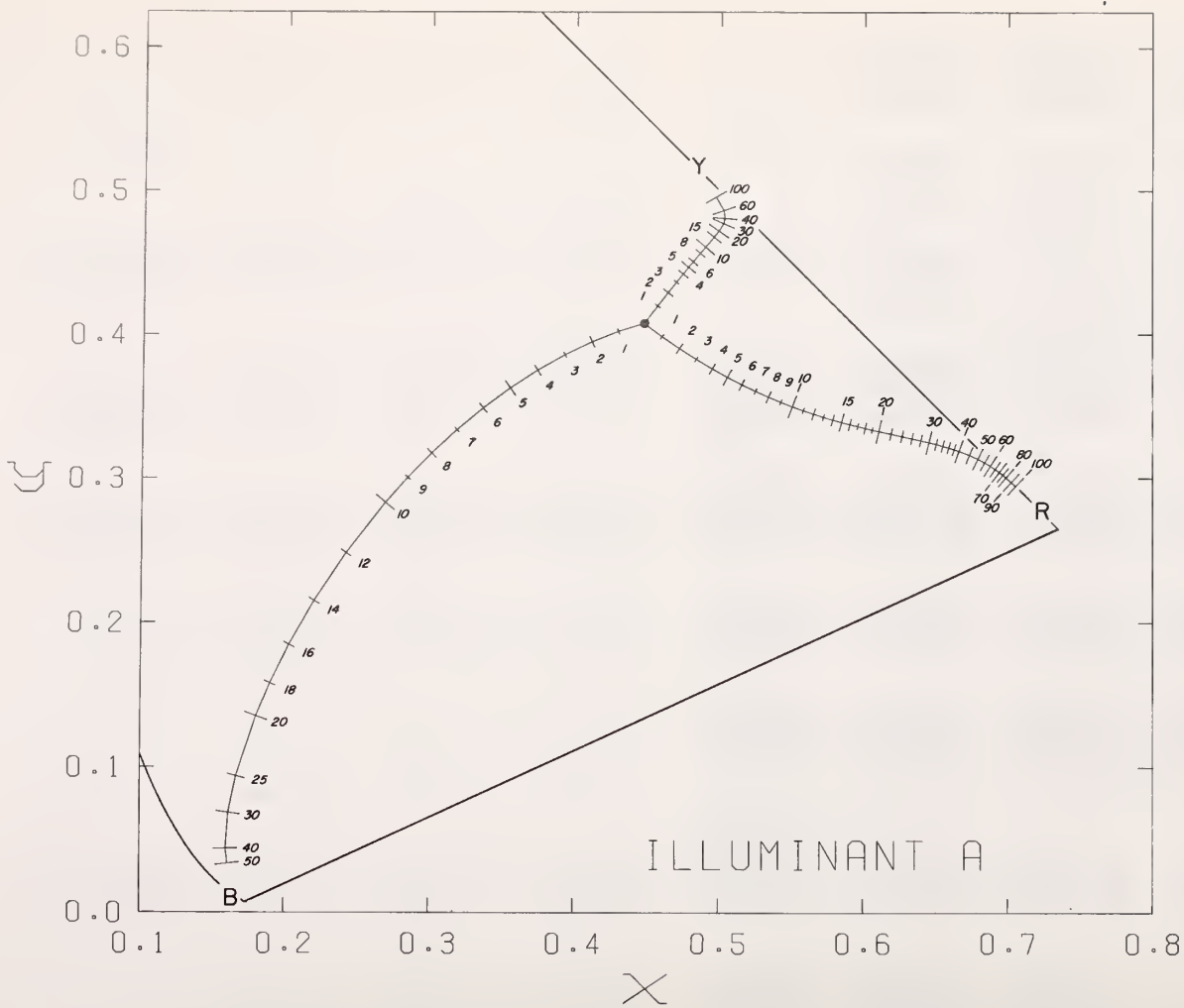

Fig. 1. Chromaticity diagram for ideal Lovibond scales showing the relationship between the CIE 1931 (x,y)-system and the indicated single-color units of red (R), yellow (Y), and blue (B) for CIE standard illuminant A. The coordinates for the illuminant (solid dot) are: x = 0.4476; y = 0.4075. A portion of the spectrum locus is also shown.

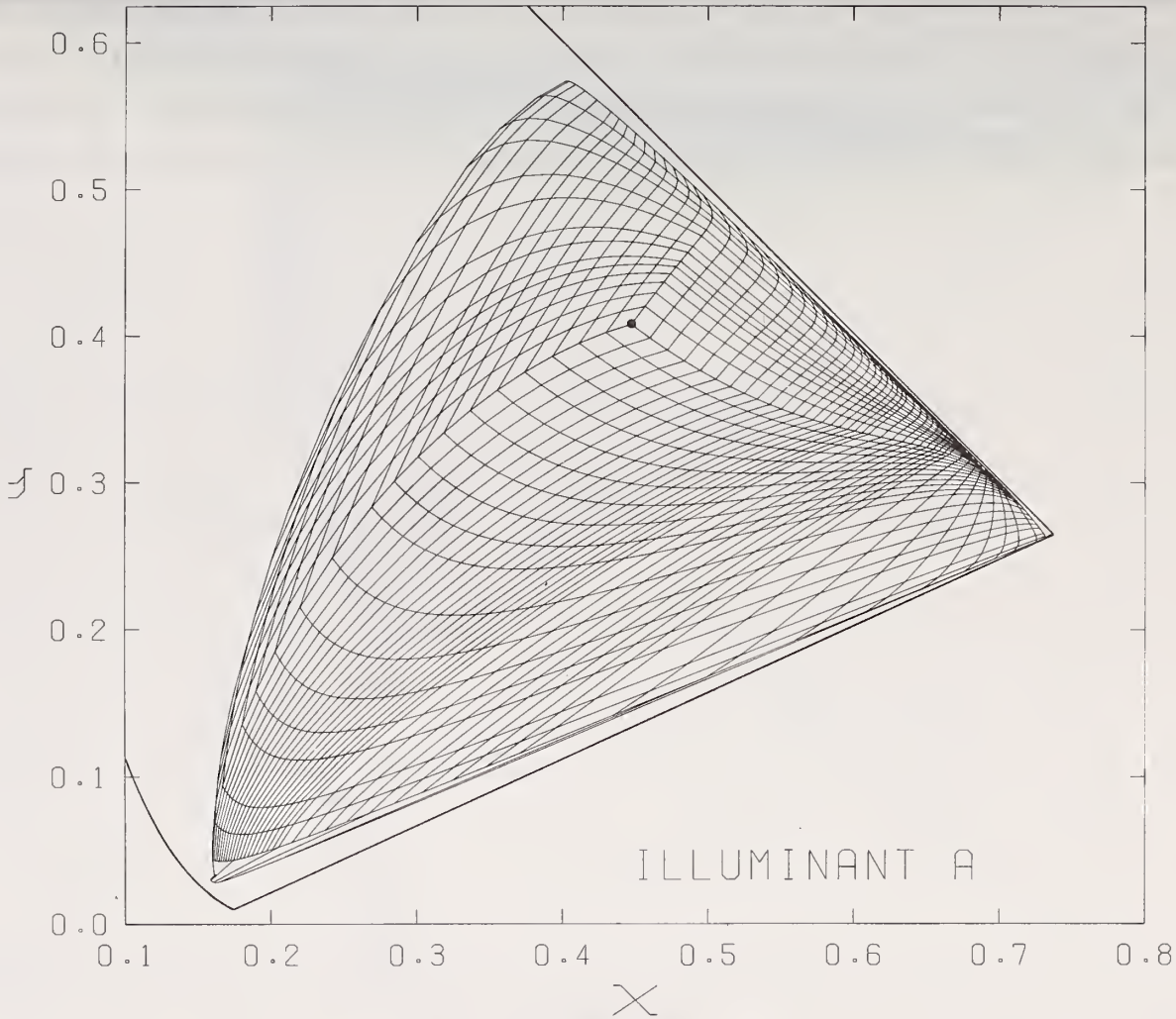

Fig. 2. Chromaticity diagram for ideal Lovibond color system showing the relationship between the CIE 1931 (x,y)-system and single-color units of red, yellow, and blue and two-color combinations of red-yellow, yellow-blue, and red-blue units for CIE standard illuminant A. The coordinates for the illuminant (solid dot) are: x = 0.4476; y = 0.4075. A portion of the spectrum locus is also shown.

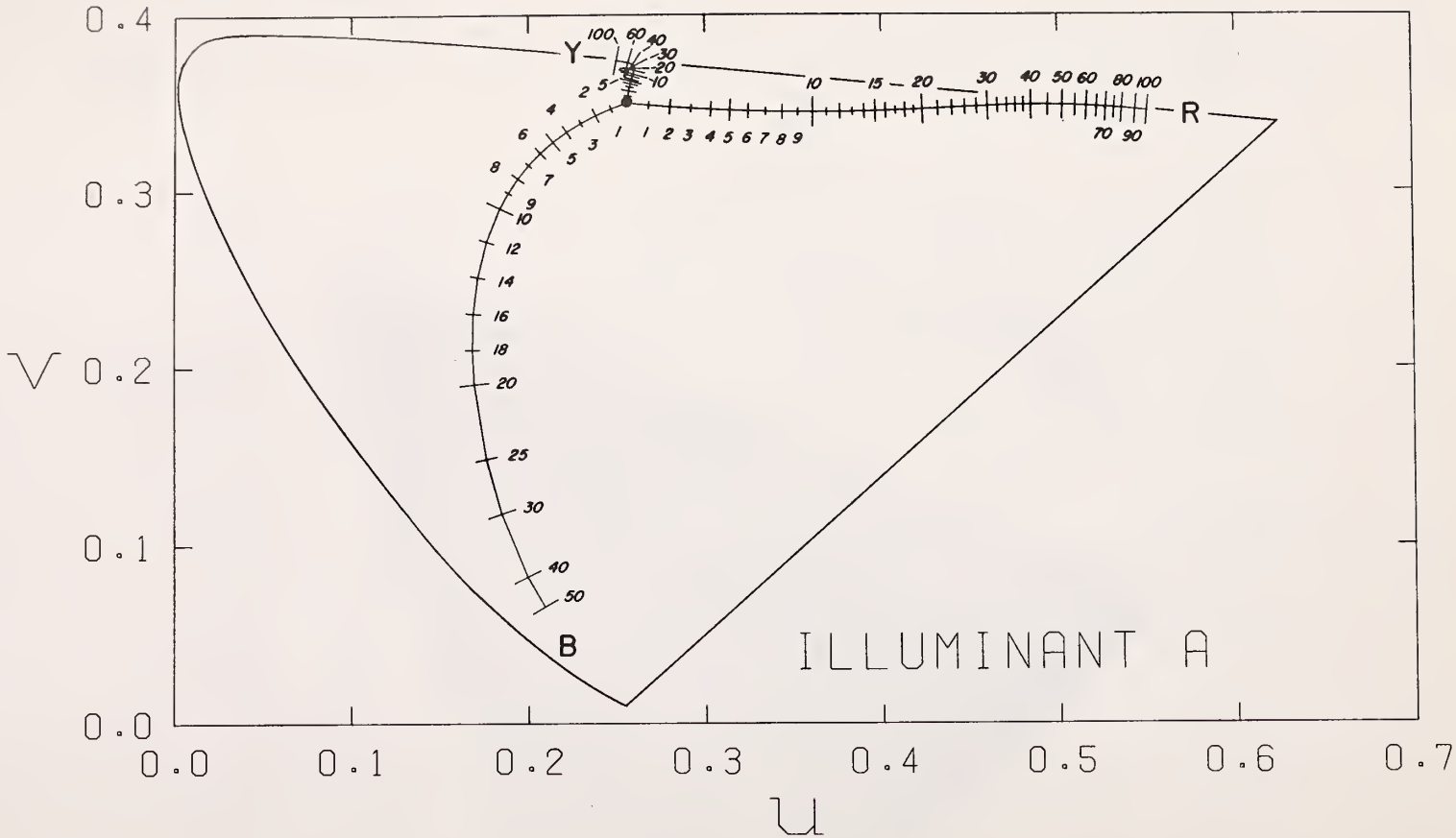

Fig. 3. Chromaticity diagram for ideal Lovibond scales showing the relationship between the CIE 1960 (u,v)-system and the indicated single-color units of red (R), yellow (Y), and blue (B) for CIE standard illuminant A. The coordinates for the illuminant (solid dot) are: u = 0.2559; v = 0.3496. The spectrum locus is also shown.

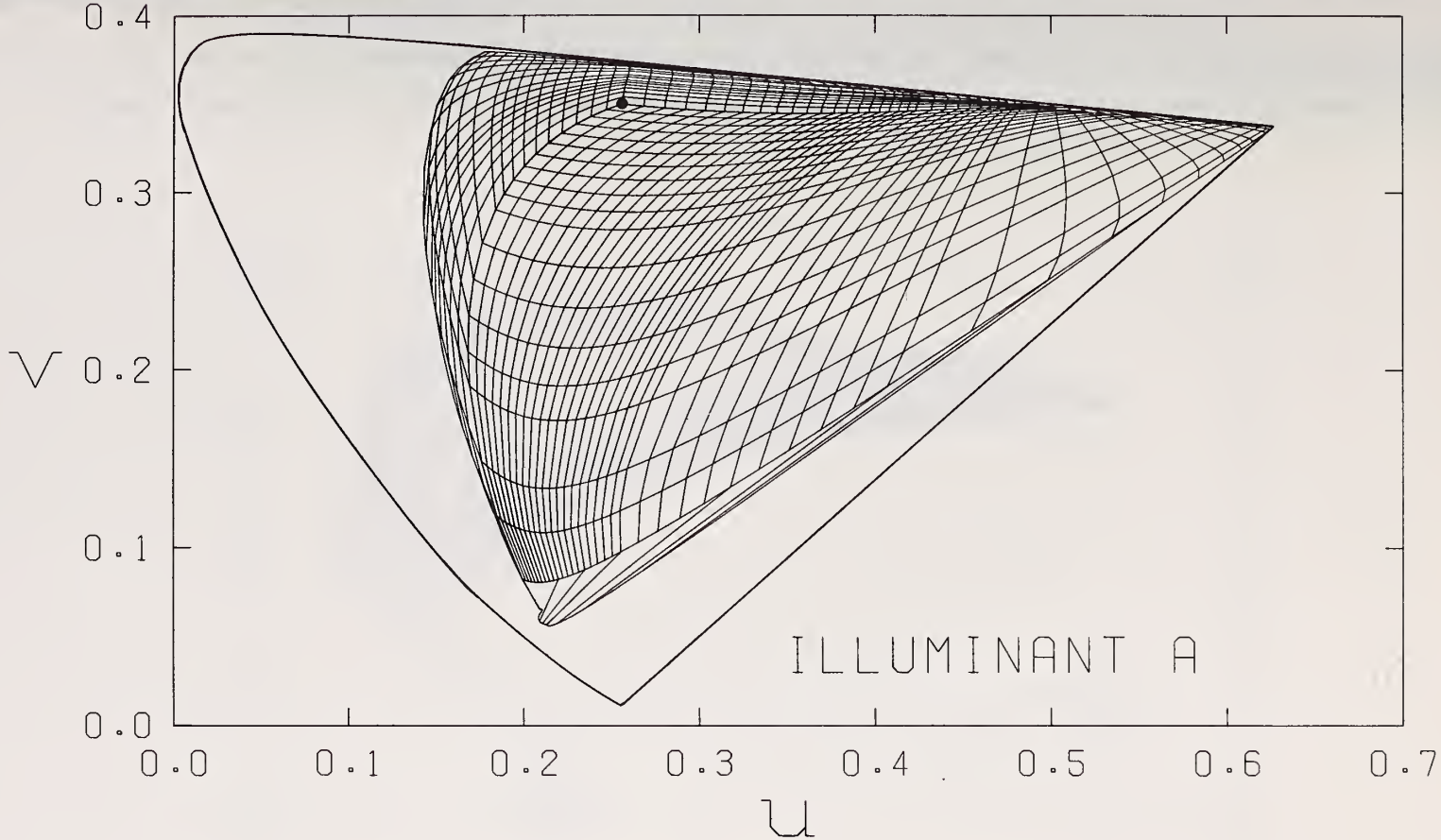

Fig. 4. Chromaticity diagram for ideal Lovibond color system showing the relationship between the CIE 1960 (u,v)-system and single-color units of red, yellow, and blue and two-color combinations of red-yellow, yellow-blue, and red-blue units for CIE standard illuminant A. The coordinates for the illuminant (solid dot) are: u = 0.2559; v = 0.3496. The spectrum locus is also shown.

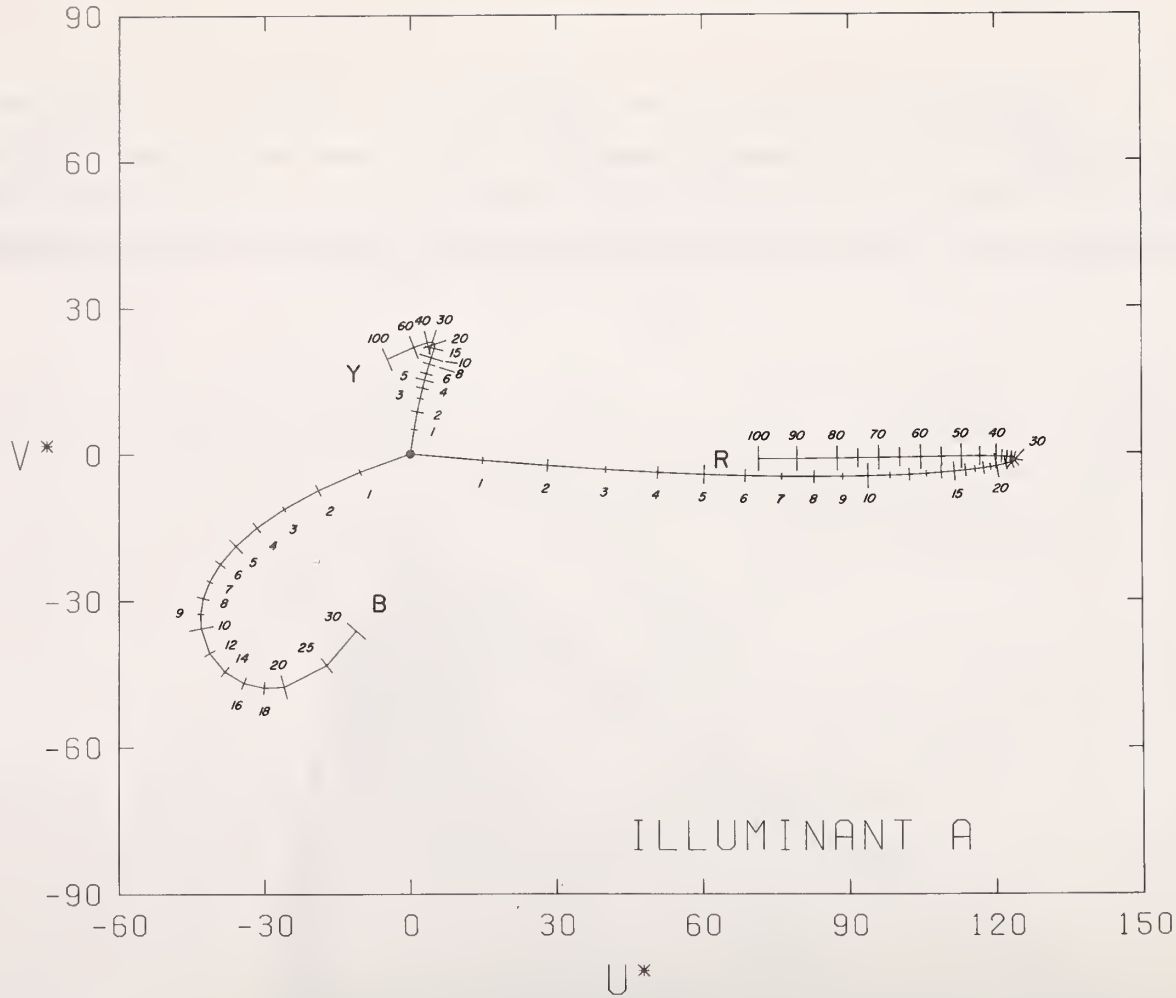

Fig. 5. Chromaticness-index diagram for ideal Lovibond scales showing the relationship between the CIE 1964 (U*,V*)-system and the indicated single-color units of red (R), yellow (Y), and blue (B) for CIE standard illuminant A. The coordinates for the illuminant (solid dot) are: U* = V* = 0.

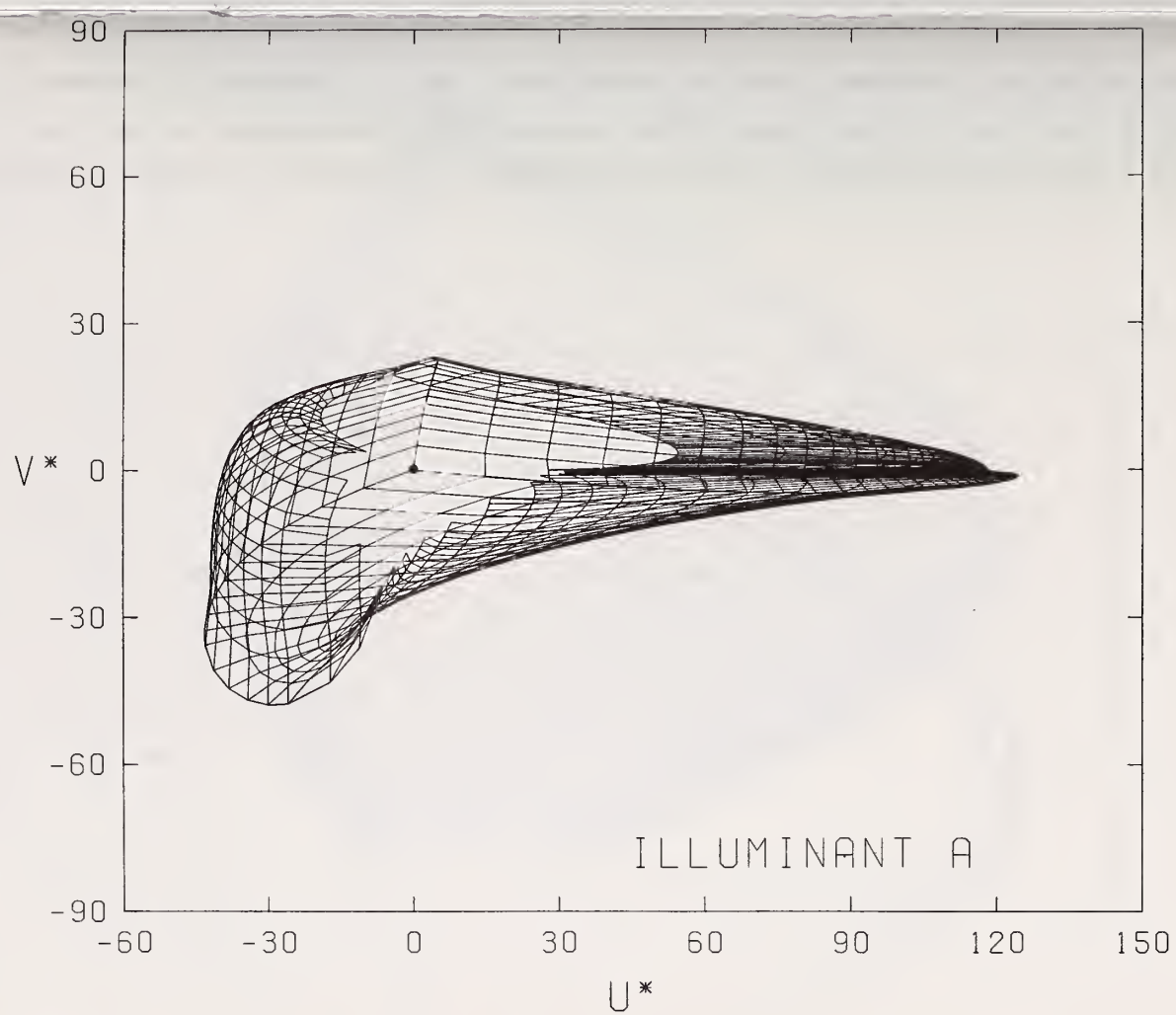

Fig. 6. Chromaticness-index diagram for ideal Lovibond color system showing the relationship between the CIE 1964 (U*,V*)-system and single-color units of red, yellow, and blue and two-color combinations of red-yellow, yellow-blue, and red-blue units for CIE standard illuminant A. The coordinates for the illuminant (solid dot) are: U* = V* = 0.

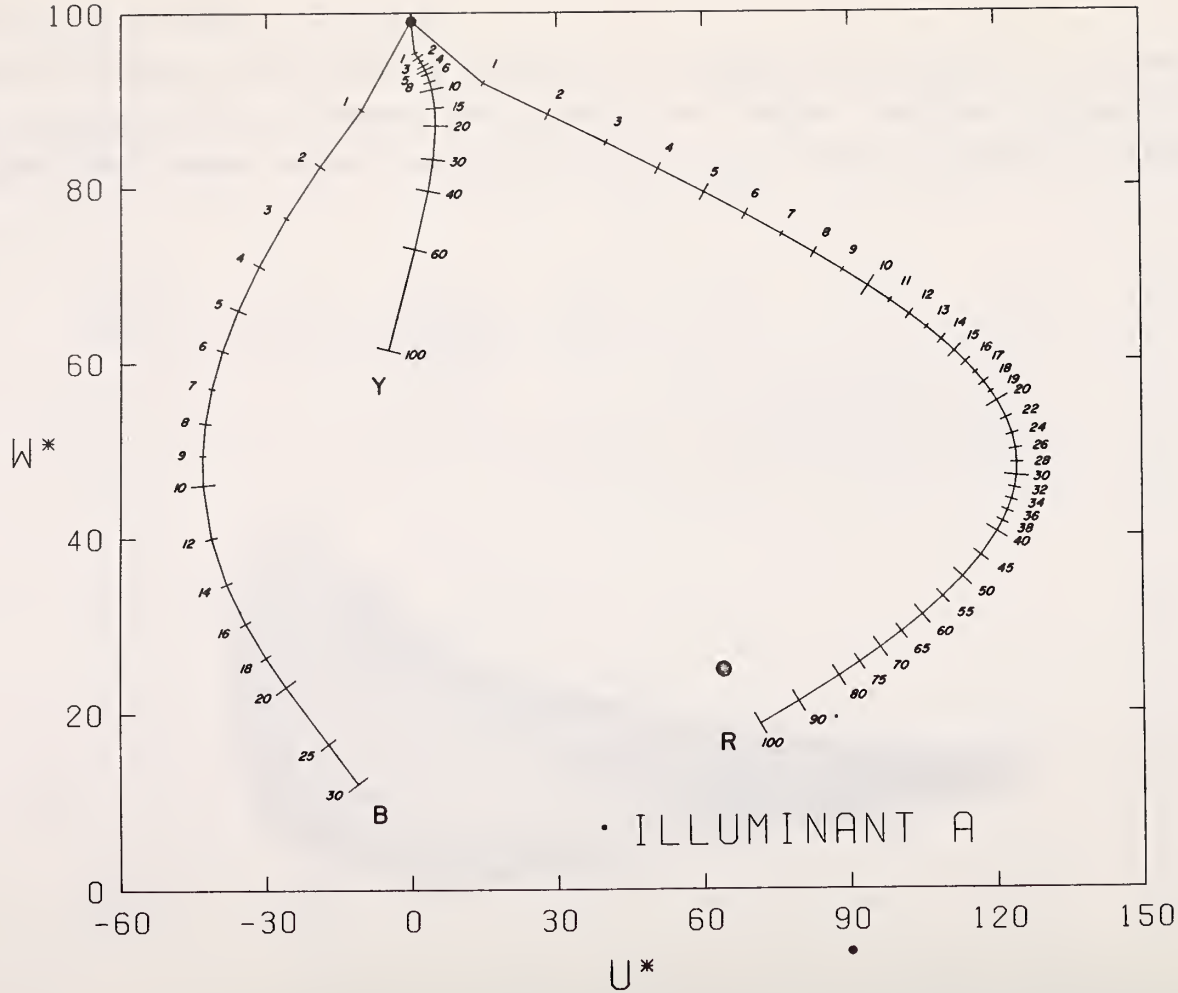

Fig. 7. Chromaticness-index-lightness-index diagram for ideal Lovibond scales showing the relationship between the CIE 1964 (U*,W*)-system and the indicated single-color units of red (R), yellow (Y), and blue (B) for CIE standard illuminant A. The coordinates for the illuminant (solid dot) are: U* = 0; W* = 99.04.

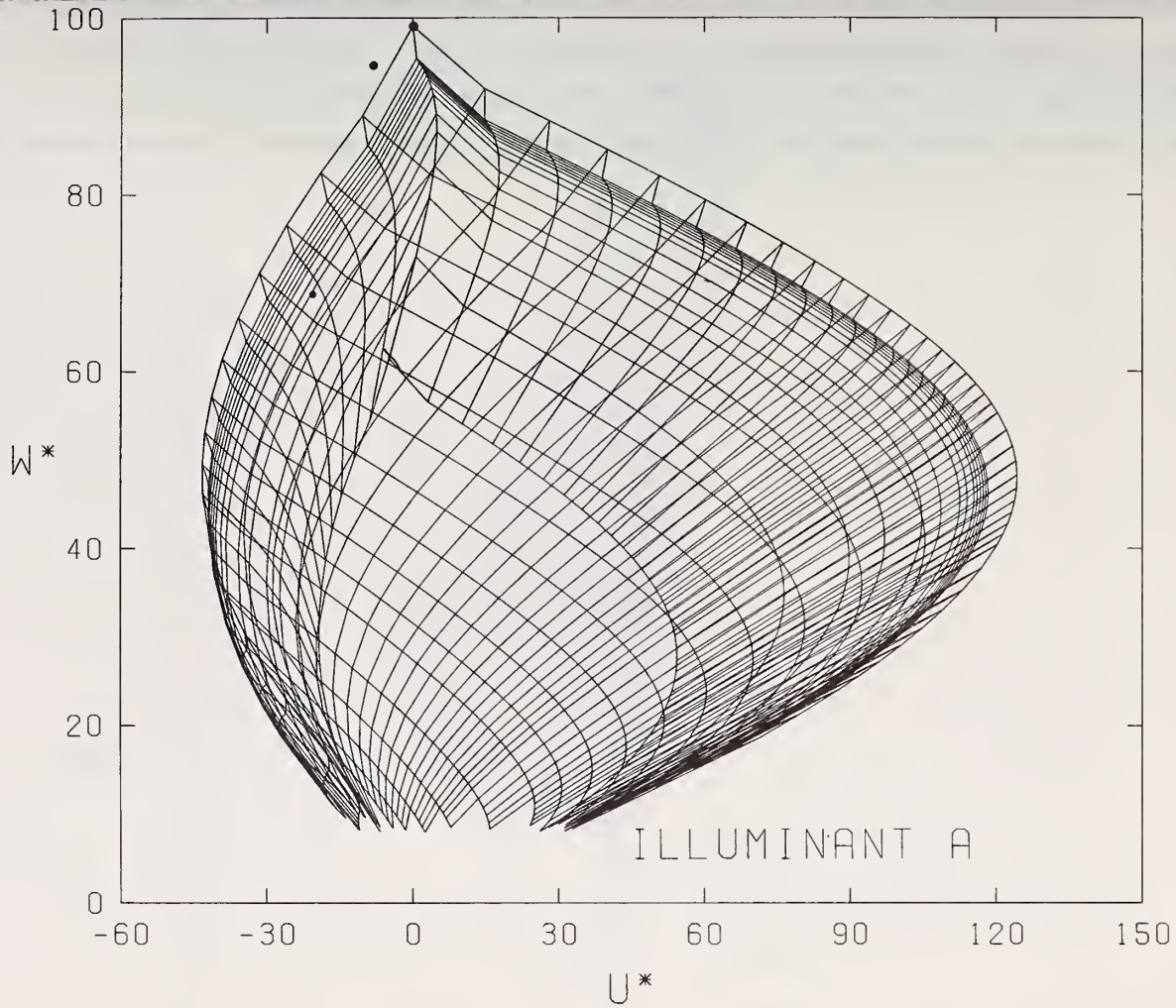

Fig. 8. Chromaticness-index-lightness-index diagram for ideal Lovibond color system showing the relationship between the CIE 1964 (U*,W*)-system and single-color units of red, yellow, and blue and two-color combinations of red-yellow, yellow-blue, and red-blue units for CIE standard illuminant A. The coordinates for the illuminant (solid dot) are: U* = 0; W* - 99.04.

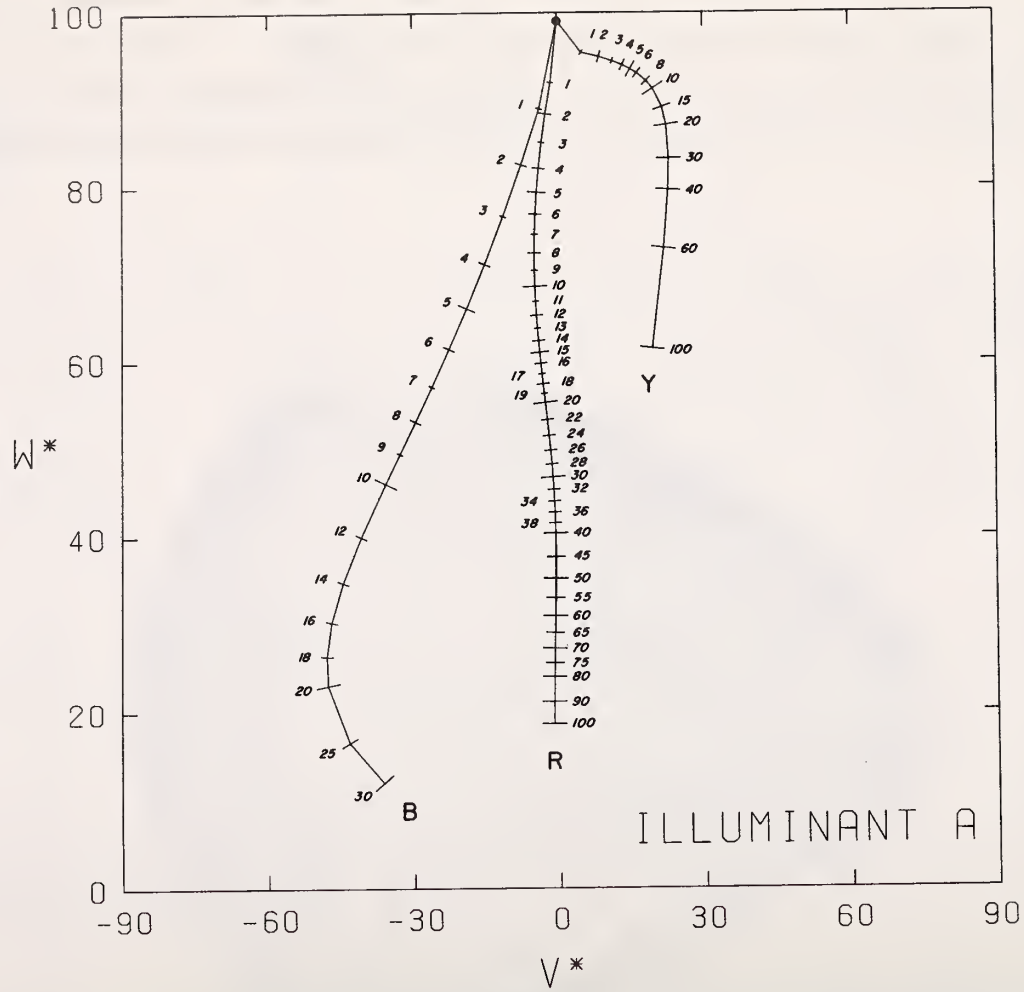

Fig. 9. Chromaticness-index-lightness-index diagram for ideal Lovibond scales showing the relationship between the CIE 1964 (V*,W*)-system and the indicated single-color units of red (R), yellow (Y), and blue (B) for CIE standard illuminant A. The coordinates for the illuminant (solid dot) are: V* = 0; W* = 99.04.

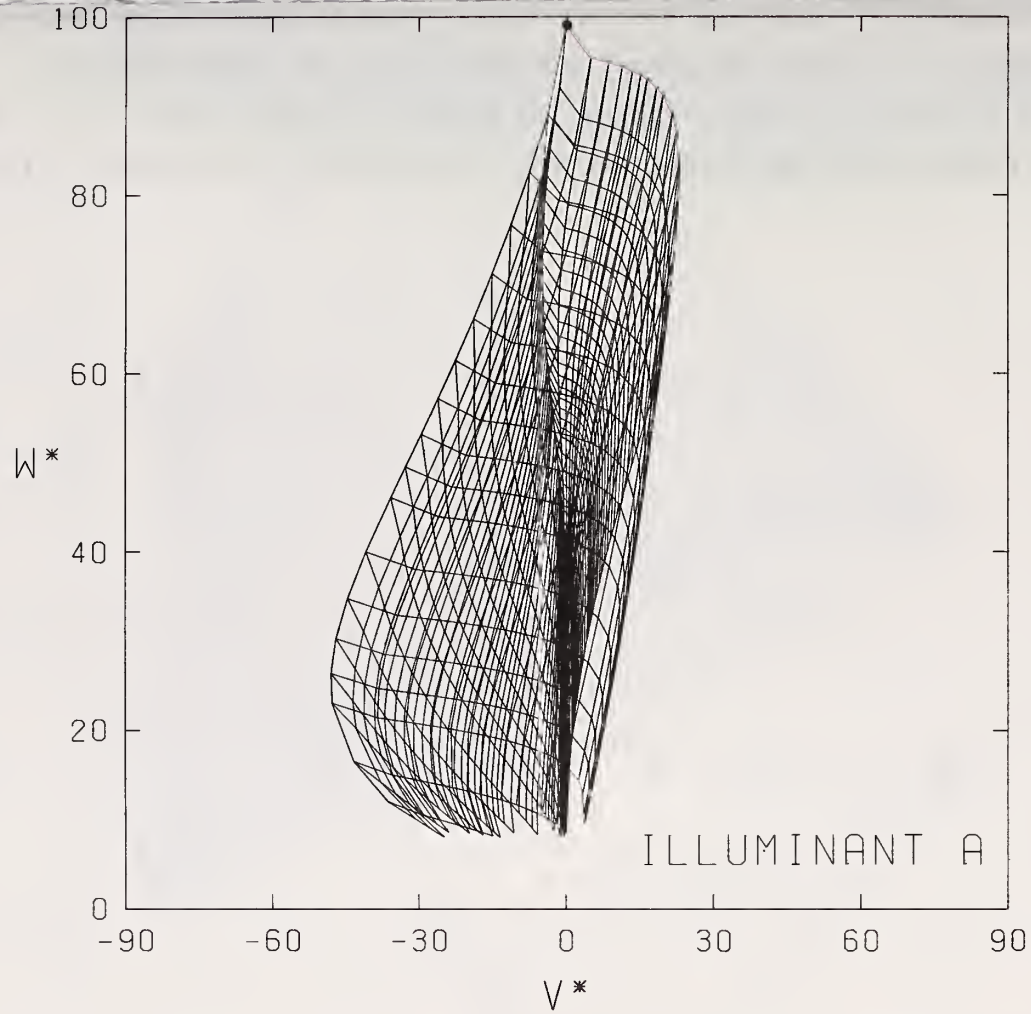

Fig. 10. Chromaticness-index-lightness-index diagram for ideal Lovibond color system showing the relationship between the CIE 1964 (V*,W*)-system and single-color units of red, yellow, and blue and two-color combinations of red-yellow, yellow-blue and red-blue units for CIE standard illuminant A. The coordinates for the illuminant (solid dot) are: V* = 0; W* = 99.04.

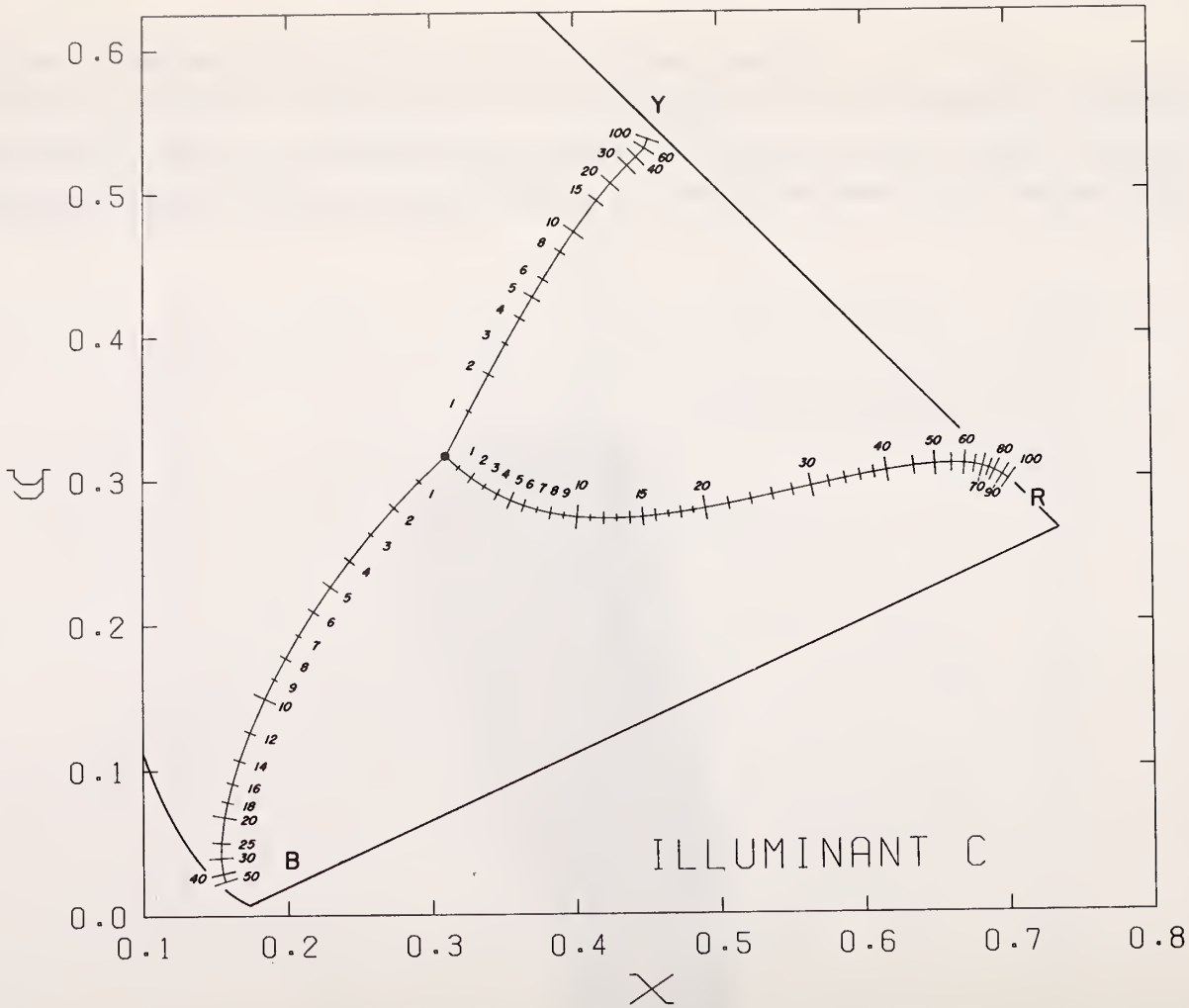

Fig. 11. Chromaticity diagram for ideal Lovibond scales showing the relationship between the CIE 1931 (x,y)-system and the indicated single-color units of red (R), yellow (Y), and blue (B) for CIE standard illuminant C. The coordinates for the illuminant (solid dot) are: x = 0.3101; y = 0.3163. A portion of the spectrum locus is also shown.

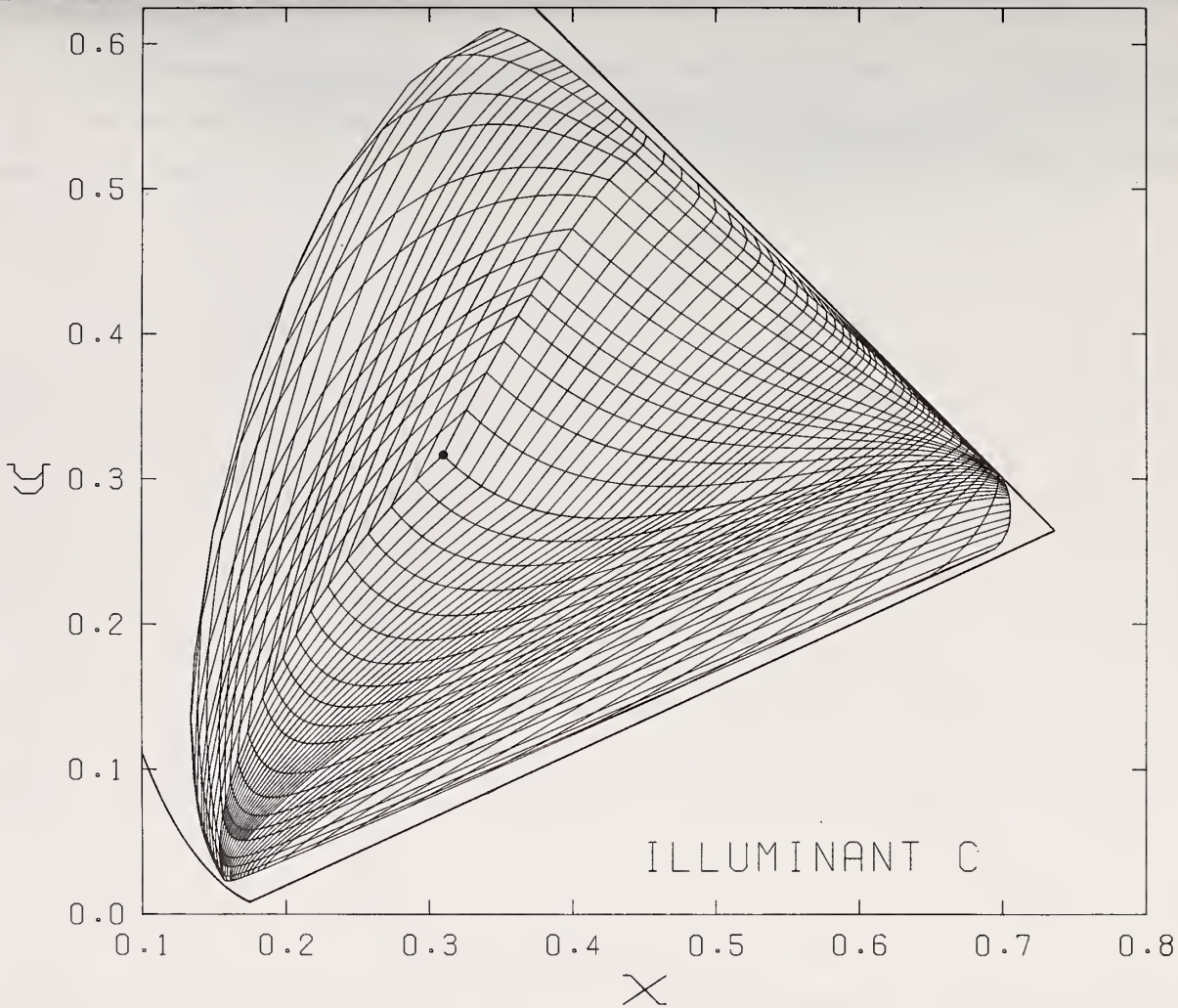

Fig. 12. Chromaticity diagram for ideal Lovibond color system showing the relationship between the CIE 1931 (x,y)-system and single-color units of red, yellow, and blue and two-color combinations of red-yellow, yellow-blue, and red-blue units for CIE standard illuminant C. The coordinates for the illuminant (solid dot) are: x = 0.3101; y = 0.3163. A portion of the spectrum locus is also shown.

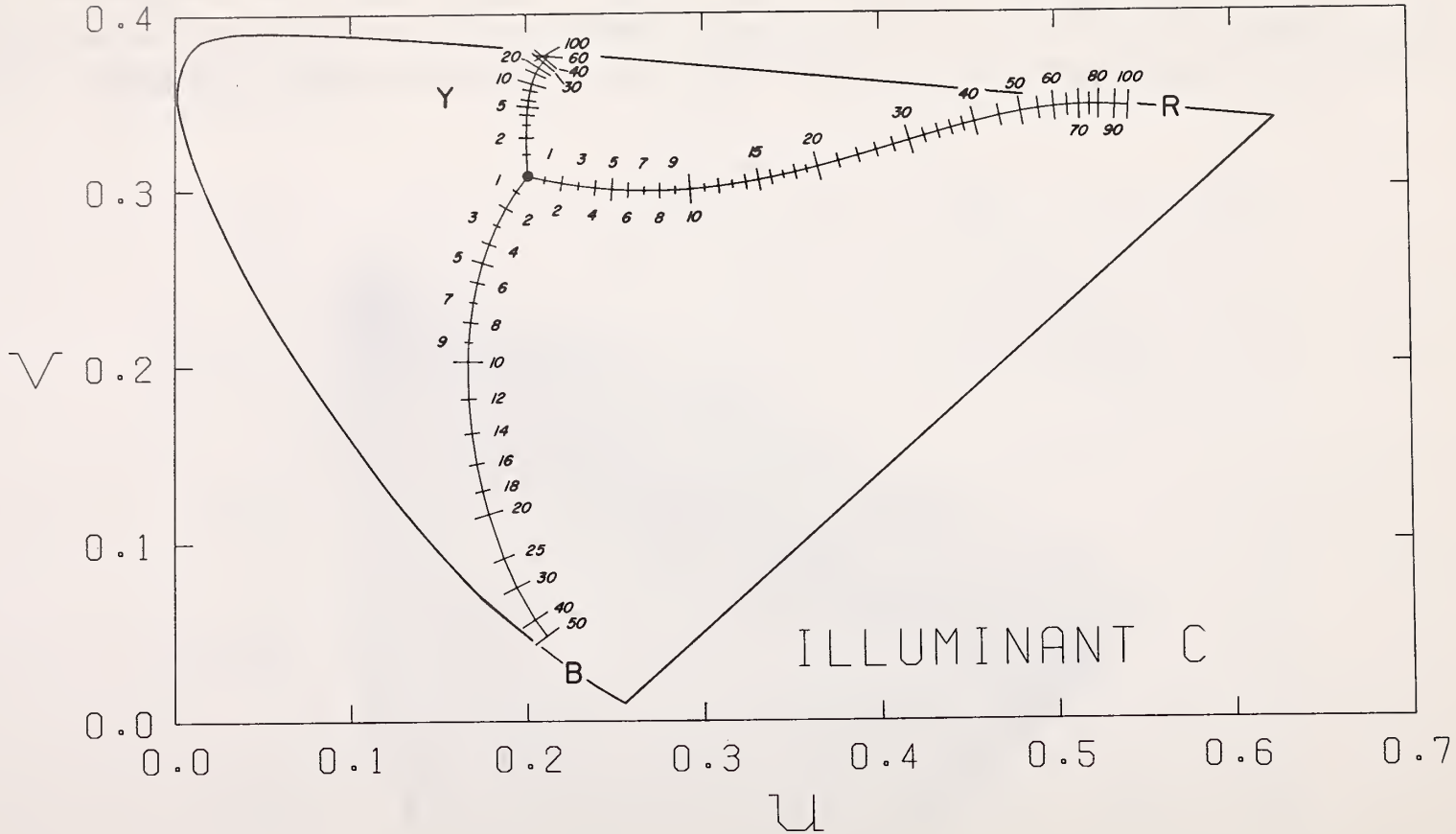

Fig. 13. Chromaticity diagram for ideal Lovibond scales showing the relationship between the CIE 1960 (u,v)-system and the indicated single-color units of red (R), yellow (Y), and blue (B) for CIE standard illuminant C. The coordinates for the illuminant (solid dot) are: u = 0.2009; v = 0.3073. The spectrum locus is also shown.

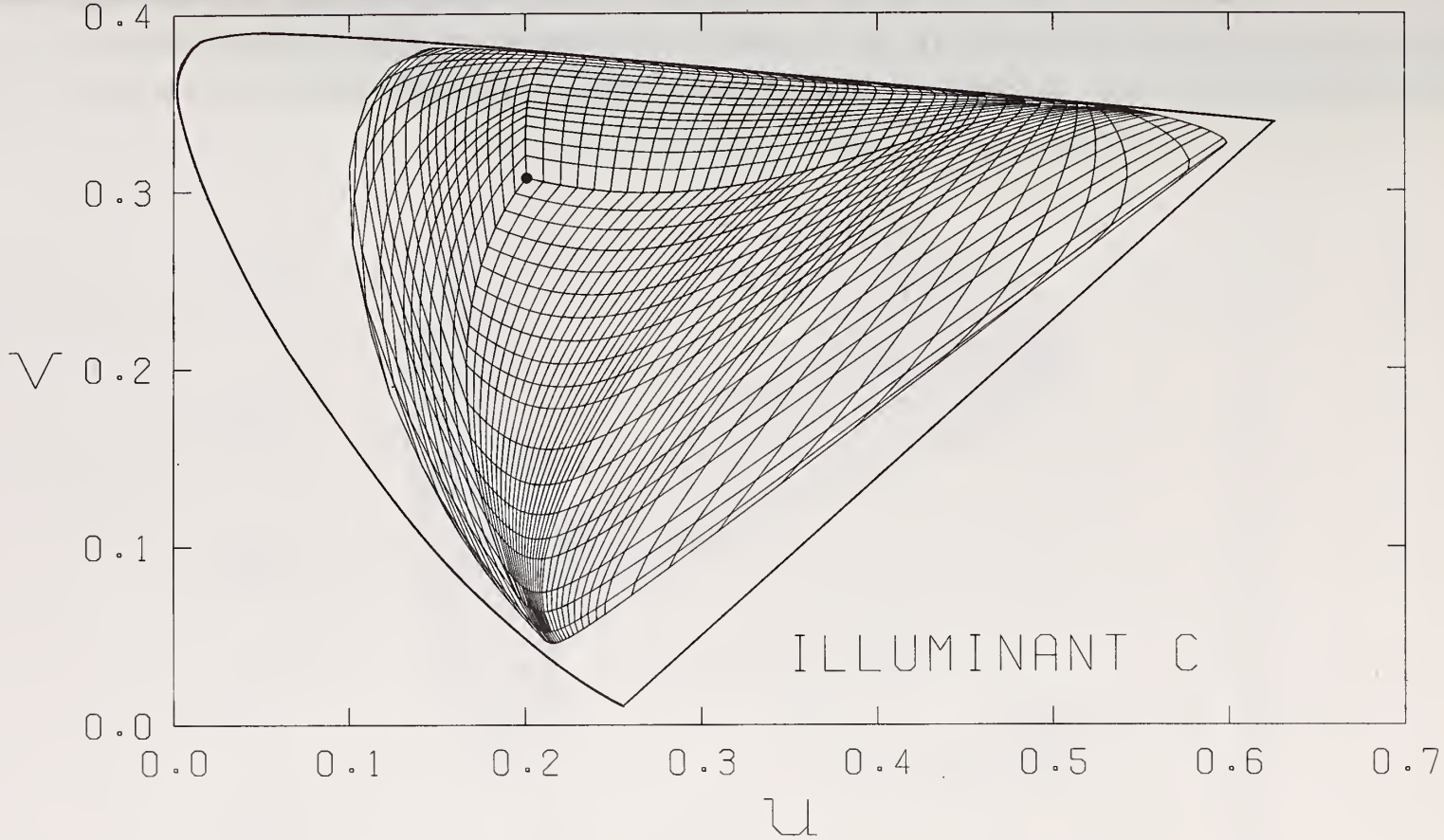

Fig. 14. Chromaticity diagram for ideal Lovibond color system showing the relationship between the CIE 1960 (u,v)-system and single-color units of red, yellow, and blue and two-color combinations of red-yellow, yellow-blue, and red-blue units for CIE standard illuminant C. The coordinates for the illuminant (solid dot) are: u = 0.2009; v = 0.3073. The spectrum locus is also shown.

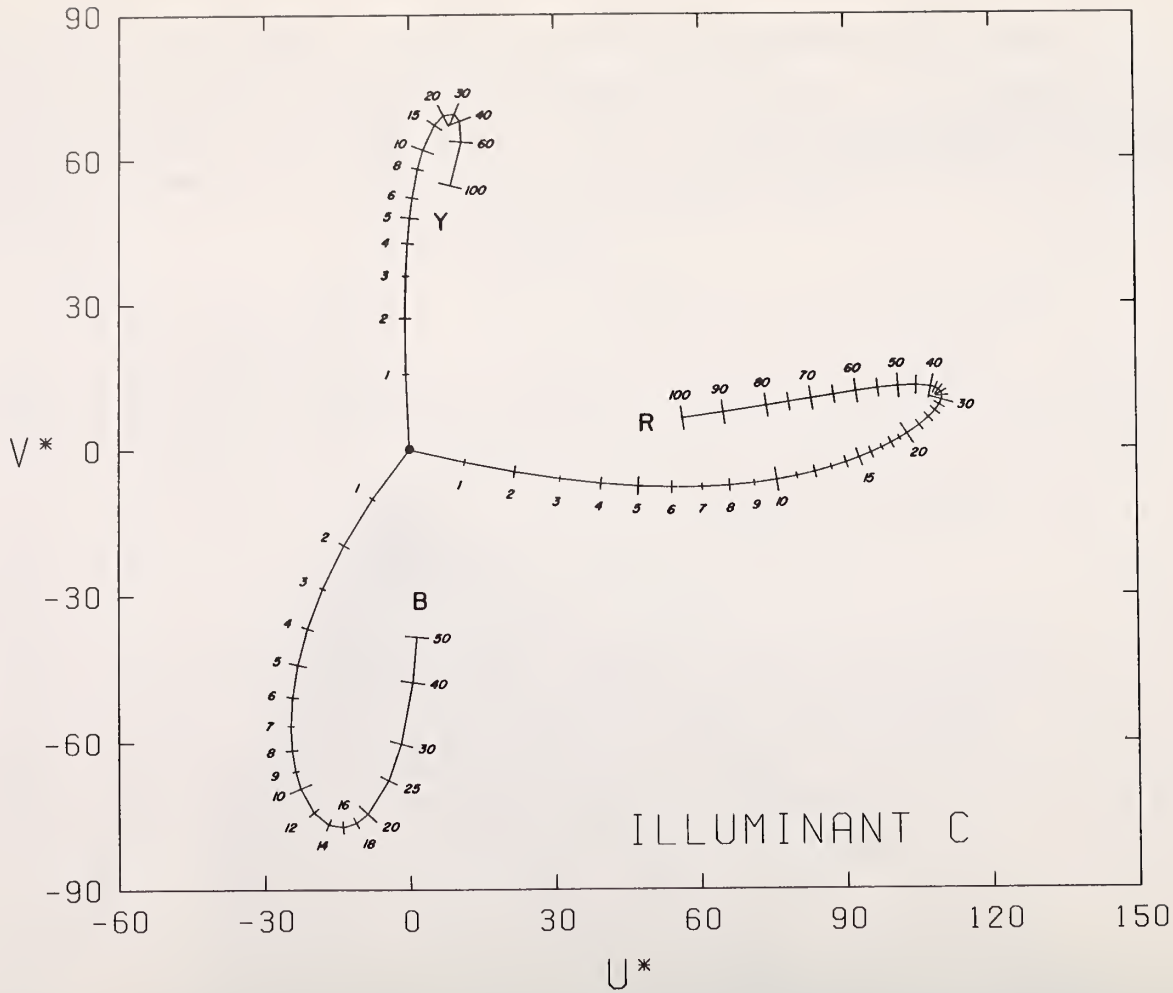

Fig. 15. Chromaticness-index diagram for ideal Lovibond scales showing the relationship between the CIE 1964 (U*,V*)-system and the indicated single-color units of red (R), yellow (Y), and blue (B) for CIE standard illuminant C. The coordinates for the illuminant (solid dot) are: U* = V* = 0.

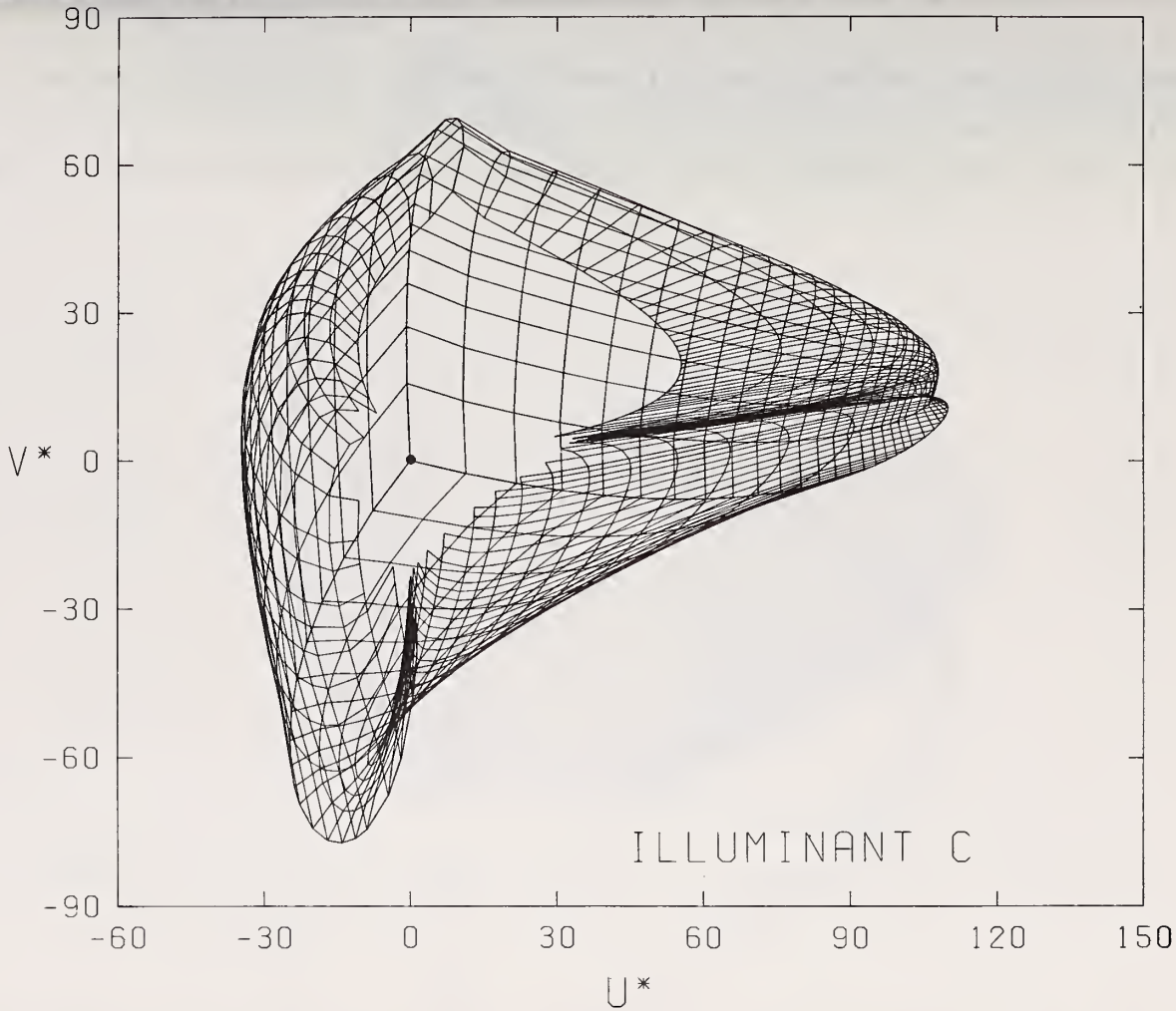

Fig. 16. Chromaticness-index diagram for ideal Lovibond color system showing the relationship between the CIE 1964 (U*,V*)-system and single-color units of red, yellow, and blue and two-color combinations of red-yellow, yellow-blue, and red-blue units for CIE standard illuminant C. The coordinates for the illuminant (solid dot) are: U* = V* = 0.

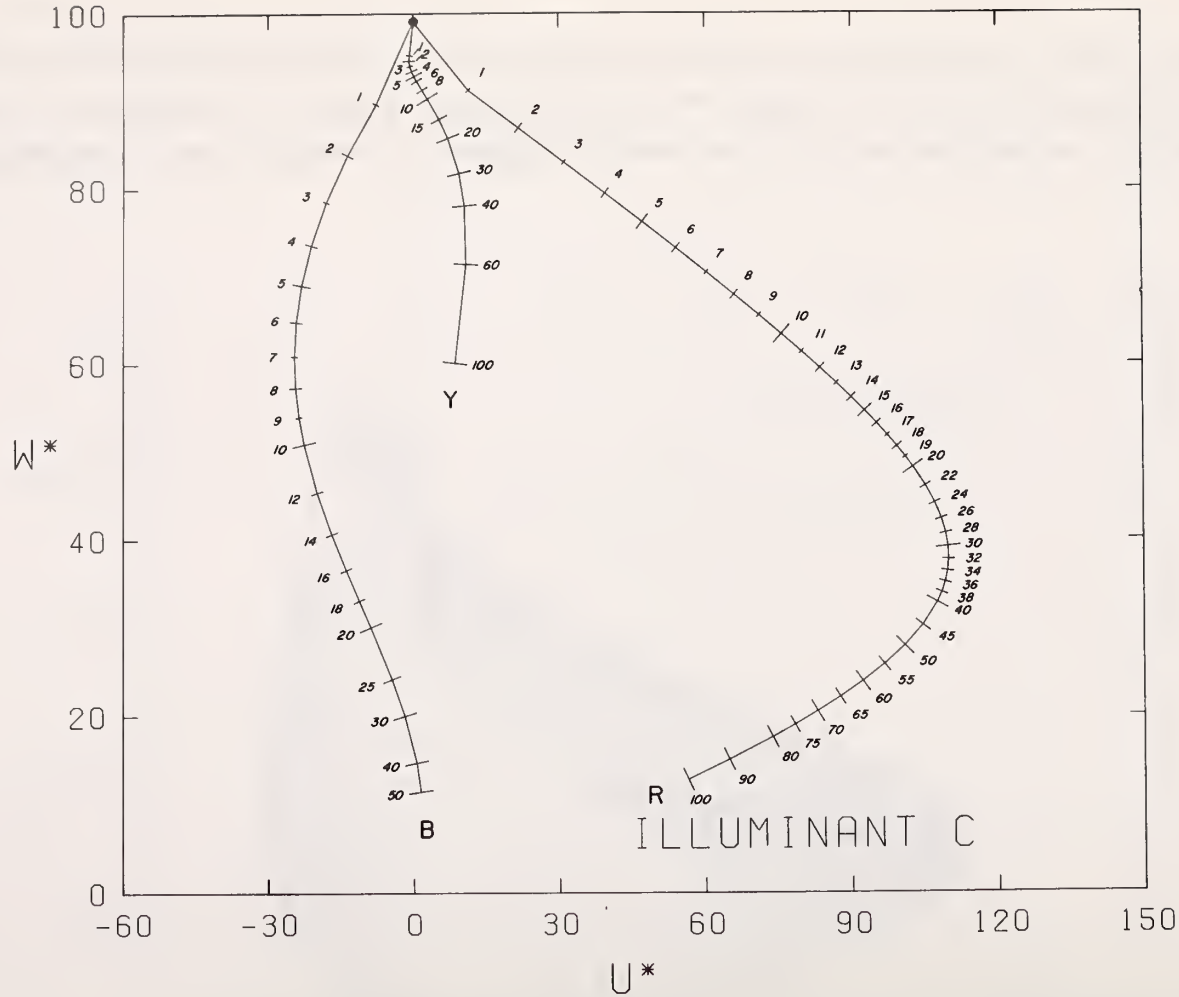

Fig. 17. Chromaticness-index-lightness-index diagram for ideal Lovibond scales showing the relationship between the CIE 1964 (U*,W*)-system and the indicated single-color units of red (R), yellow (Y), and blue (B) for CIE standard illuminant C. The coordinates for the illuminant (solid dot) are: U* = 0; W* = 99.04.

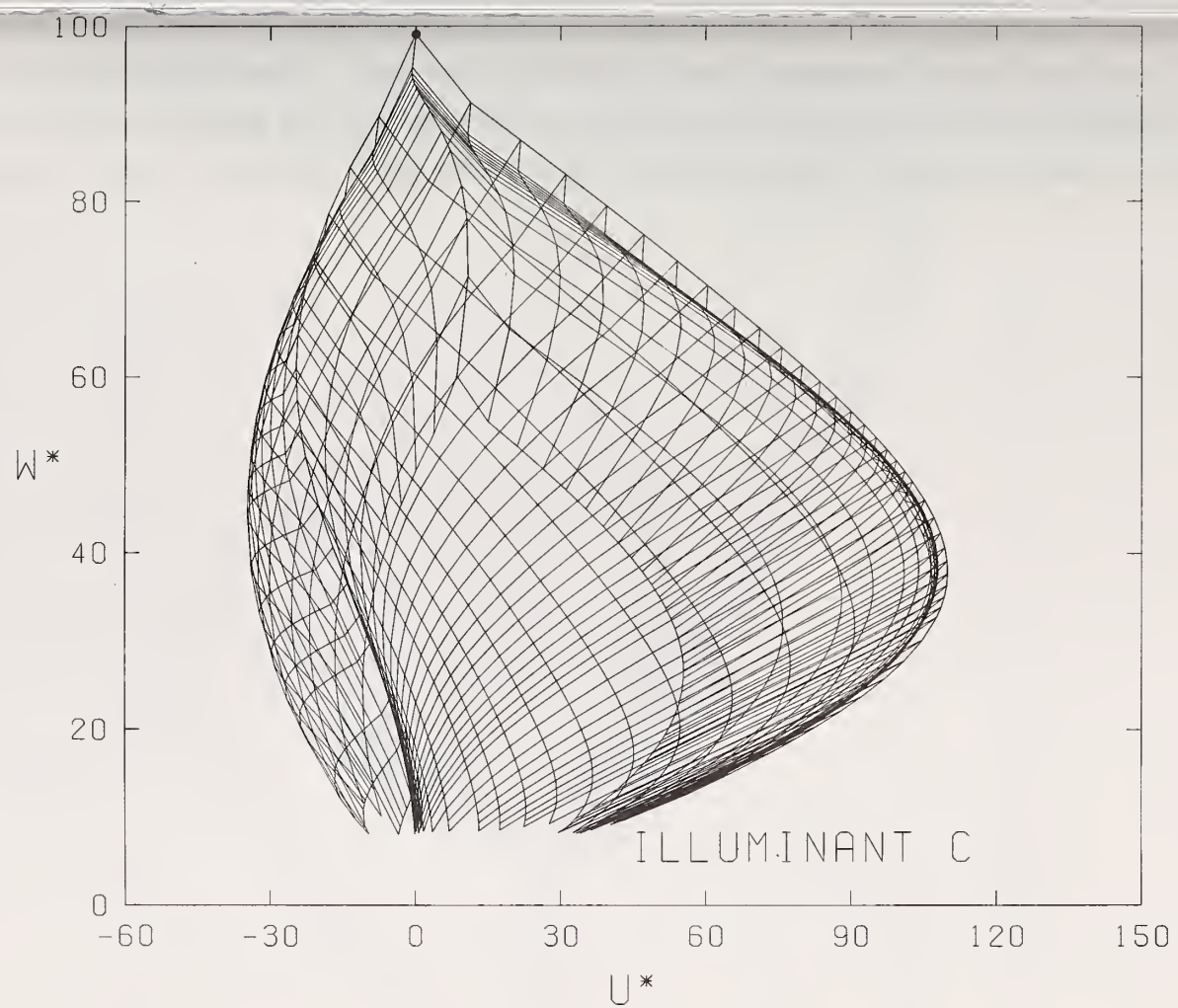

Fig. 18. Chromaticness-index-lightness-index diagram for ideal Lovibond color system showing the relationship between the CIE 1964 (U*,W*)-system and single-color units of red, yellow, and blue and two-color combinations of red-yellow, yellow-blue, and red-blue units for CIE standard illuminant C. The coordinates for the illuminant (solid dot) are: U* = 0; W* = 99.04.

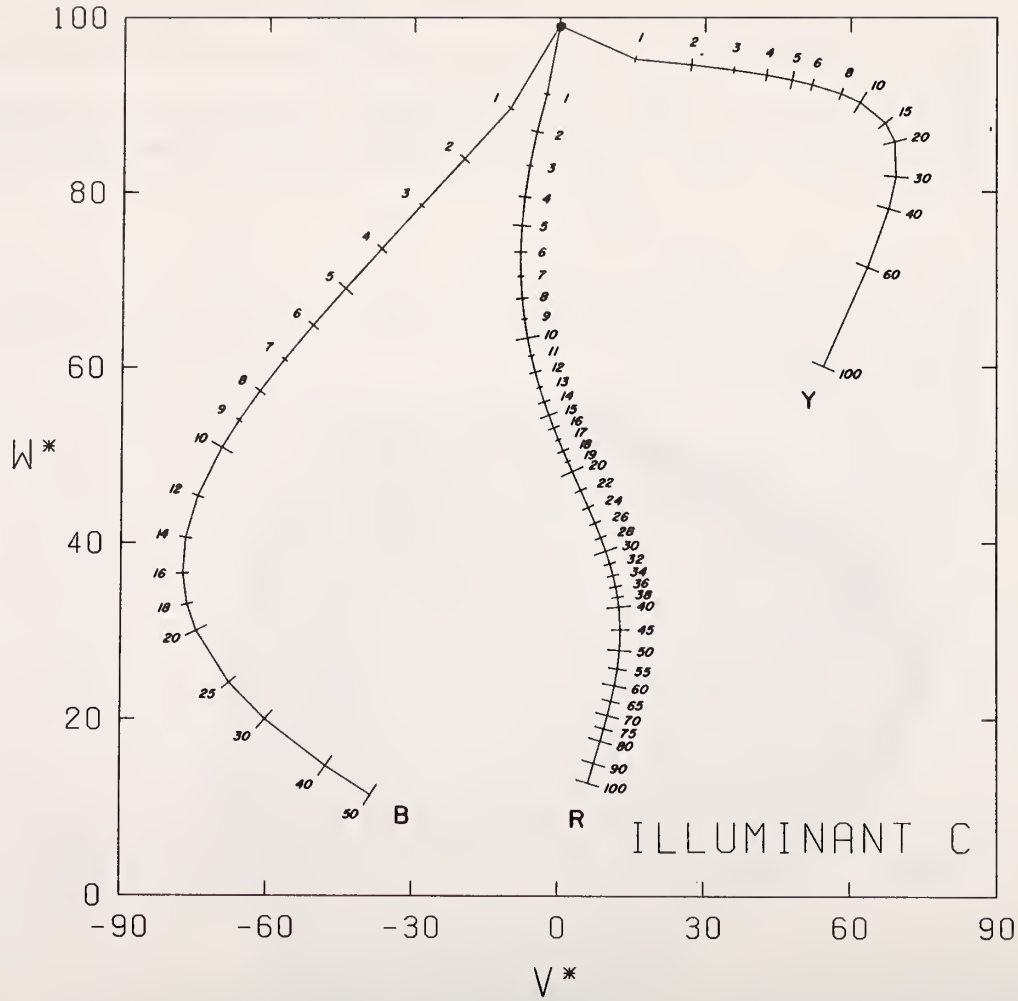

Fig. 19. Chromaticness-index-lightness-index diagram for ideal Lovibond scales showing the relationship between the CIE 1964 (V*,W*)-system and the indicated single-color units of red (R), yellow (Y), and blue (B) for CIE standard illuminant C. The coordinates for the illuminant (solid dot) are: V* = 0; W* = 99.04.

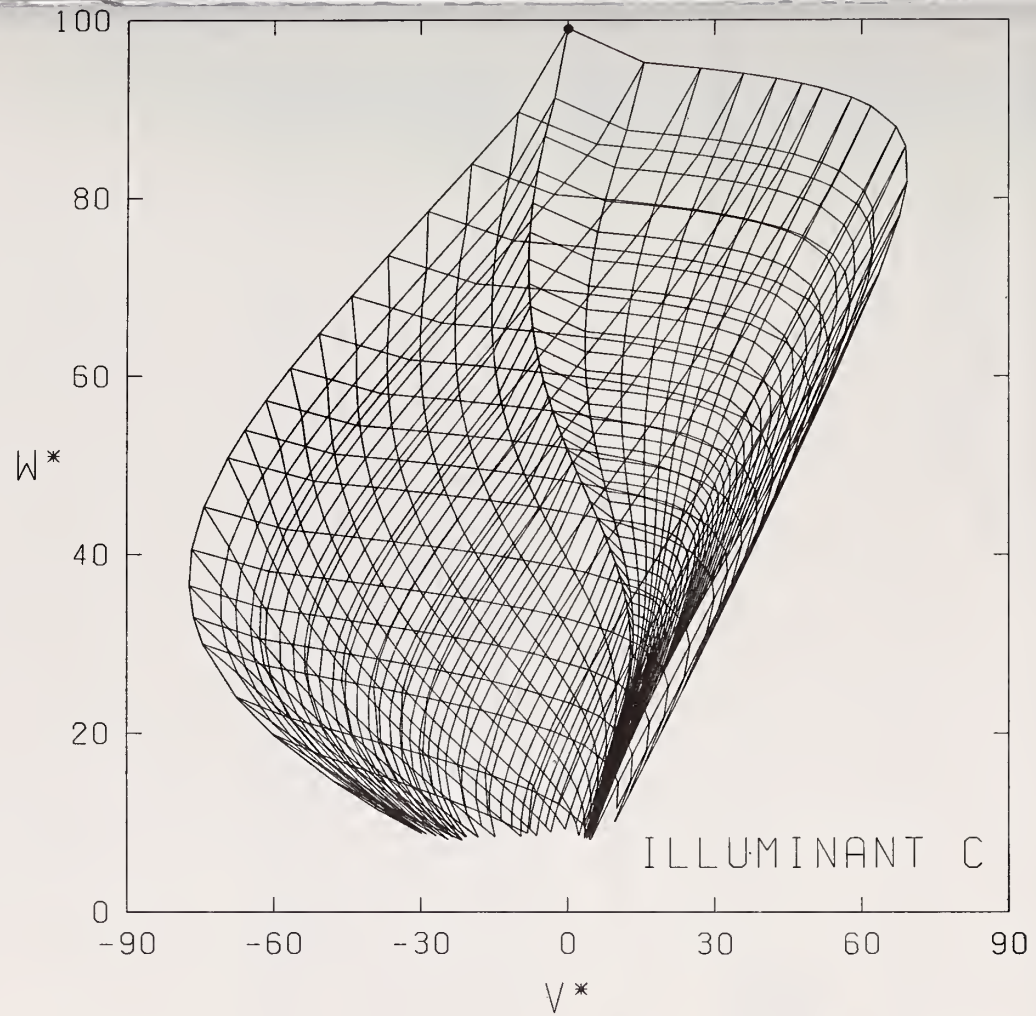

Fig. 20. Chromaticness-index-lightness-index diagram for ideal Lovibond color system showing the relationship between the CIE 1964 (V*,W*)-system and single-color units of red, yellow, and blue and two-color combinations of red-yellow, yellow-blue, and red-blue units for CIE standard illuminant C. The coordinates for the illuminant (solid dot) are: V* = 0; W* = 99.04.

FORM NBS-114A (1-71)

U.S. DEPT. OF COMM. BIBLIOGRAPHIC DATA SHEET	1. PUBLICATION OR REPORT NO. NBS TN-716	2. Gov't Accession No.	3. Recipient's Accession No.

4. TITLE AND SUBTITLE

The Ideal Lovibond Color System for C I E Standard Illuminants A and C Shown in Three Colorimetric Systems

5. Publication Date: April 1972

6. Performing Organization Code

7. AUTHOR(S)

Geraldine W. Haupt, John C. Schleter, and Kenneth L. Eckerle

8. Performing Organization

9. PERFORMING ORGANIZATION NAME AND ADDRESS

NATIONAL BUREAU OF STANDARDS
DEPARTMENT OF COMMERCE
WASHINGTON, D.C. 20234

10. Project/Task/Work Unit No.: 2211124

11. Contract/Grant No.

12. Sponsoring Organization Name and Address

Same as No. 9.

13. Type of Report & Period Covered: Final

14. Sponsoring Agency Code

15. SUPPLEMENTARY NOTES

16. ABSTRACT (A 200-word or less factual summary of most significant information. If document includes a significant bibliography or literature survey, mention it here.)

Tables are given which list luminous internal transmittances, luminous transmittances, and chromaticity coordinates of the ideal Lovibond color system for CIE standard illuminants A and C according to (1) the CIE 1931 (x,y)-system, (2) the CIE 1960 uniform-chromaticity-scale (UCS) (u,v)-system, and (3) the CIE 1964 (U*, V*, W*,)-system. Chromaticity diagrams for the (x,y)- and (u,v)-systems are shown together with horizontal and vertical cross-sections of the (U*, V*, W*) color solid for the entire ideal Lovibond color system produced by single-color units and two-color combinations of units for each illuminant. In addition, chromaticity diagrams and cross-sections are shown indicating the single-color units of red, yellow, and blue for each CIE system and illuminant.

17. KEY WORDS (Alphabetical order, separated by semicolons)

Chromaticity, Lovibond; CIE and Lovibond; color, Lovibond; colorimetry, Lovibond; glass color standards; Lovibond and CIE.

18. AVAILABILITY STATEMENT

[X] UNLIMITED.

[ ] FOR OFFICIAL DISTRIBUTION. DO NOT RELEASE TO NTIS.

19. SECURITY CLASS (THIS REPORT): UNCLASSIFIED

20. SECURITY CLASS (THIS PAGE): UNCLASSIFIED

21. NO. OF PAGES: 115

22. Price: $1.00

NBS TECHNICAL PUBLICATIONS

PERIODICALS

JOURNAL OF RESEARCH reports National Bureau of Standards research and development in physics, mathematics, chemistry, and engineering. Comprehensive scientific papers give complete details of the work, including laboratory data, experimental procedures, and theoretical and mathematical analyses. Illustrated with photographs, drawings, and charts.

Published in three sections, available separately:

• Physics and Chemistry

Papers of interest primarily to scientists working in these fields. This section covers a broad range of physical and chemical research, with major emphasis on standards of physical measurement, fundamental constants, and properties of matter. Issued six times a year. Annual subscription: Domestic, $9.50; $2.25 additional for foreign mailing.

• Mathematical Sciences

Studies and compilations designed mainly for the mathematician and theoretical physicist. Topics in mathematical statistics, theory of experiment design, numerical analysis, theoretical physics and chemisty, logical design and programming of computers and computer systems. Short numerical tables. Issued quarterly. Annual subscription: Domestic, $5.00; $1.25 additional for foreign mailing.

• Engineering and Instrumentation

Reporting results of interest chiefly to the engineer and the applied scientist. This section includes many of the new developments in instrumentation resulting from the Bureau's work in physical measurement, data processing, and development of test methods. It will also cover some of the work in acoustics, applied mechanics, building research, and cryogenic engineering. Issued quarterly. Annual subscription: Domestic, $5.00; $1.25 additional for foreign mailing.

TECHNICAL NEWS BULLETIN

The best single source of information concerning the Bureau's research, developmental, cooperative, and publication activities, this monthly publication is designed for the industry-oriented individual whose daily work involves intimate contact with science and technology—*for engineers, chemists, physicists, research managers, product-development managers, and company executives.* Annual subscription: Domestic, $3.00; $1.00 additional for foreign mailing.

NONPERIODICALS

Applied Mathematics Series. Mathematical tables, manuals, and studies.

Building Science Series. Research results, test methods, and performance criteria of building materials, components, systems, and structures.

Handbooks. Recommended codes of engineering and industrial practice (including safety codes) developed in cooperation with interested industries, professional organizations, and regulatory bodies.

Special Publications. Proceedings of NBS conferences, bibliographies, annual reports, wall charts, pamphlets, etc.

Monographs. Major contributions to the technical literature on various subjects related to the Bureau's scientific and technical activities.

National Standard Reference Data Series. NSRDS provides quantitative data on the physical and chemical properties of materials, compiled from the world's literature and critically evaluated.

Product Standards. Provide requirements for sizes, types, quality, and methods for testing various industrial products. These standards are developed cooperatively with interested Government and industry groups and provide the basis for common understanding of product characteristics for both buyers and sellers. Their use is voluntary.

Technical Notes. This series consists of communications and reports (covering both other agency and NBS-sponsored work) of limited or transitory interest.

Federal Information Processing Standards Publications. This series is the official publication within the Federal Government for information on standards adopted and promulgated under the Public Law 89–306, and Bureau of the Budget Circular A–86 entitled, Standardization of Data Elements and Codes in Data Systems.

Consumer Information Series. Practical information, based on NBS research and experience, covering areas of interest to the consumer. Easily understandable language and illustrations provide useful background knowledge for shopping in today's technological marketplace.

NBS Special Publication 305, Supplement 1, Publications of the NBS, 1968-1969. When ordering, include Catalog No. C13.10:305. Price $4.50; $1.25 additional for foreign mailing.

Order NBS publications from: Superintendent of Documents
Government Printing Office
Washington, D.C. 20402

U.S. DEPARTMENT OF COMMERCE
National Bureau of Standards
Washington, D.C. 20234

OFFICIAL BUSINESS

Penalty for Private Use, $300

POSTAGE AND FEES PAID
U.S. DEPARTMENT OF COMMERCE

U.S.MAIL