A11100 996170
NAT'L INST OF STANDARDS & TECH R.I.C.
A11100996170
/NBS building science series
TA435 .U58 V121;1980 C.1 NBS-PUB-C 1974

TA
435
.U58
NO.121
1980
c.2

NBS BUILDING SCIENCE SERIES 121

# Soil Classification for Construction Practice in Shallow Trenching

U.S. DEPARTMENT OF COMMERCE • NATIONAL BUREAU OF STANDARDS

AUTHENTICATED
U.S. GOVERNMENT
INFORMATION
GPO

# NATIONAL BUREAU OF STANDARDS

The National Bureau of Standards[1] was established by an act of Congress on March 3, 1901. The Bureau's overall goal is to strengthen and advance the Nation's science and technology and facilitate their effective application for public benefit. To this end, the Bureau conducts research and provides: (1) a basis for the Nation's physical measurement system, (2) scientific and technological services for industry and government, (3) a technical basis for equity in trade, and (4) technical services to promote public safety. The Bureau's technical work is performed by the National Measurement Laboratory, the National Engineering Laboratory, and the Institute for Computer Sciences and Technology.

**THE NATIONAL MEASUREMENT LABORATORY** provides the national system of physical and chemical and materials measurement; coordinates the system with measurement systems of other nations and furnishes essential services leading to accurate and uniform physical and chemical measurement throughout the Nation's scientific community, industry, and commerce; conducts materials research leading to improved methods of measurement, standards, and data on the properties of materials needed by industry, commerce, educational institutions, and Government; provides advisory and research services to other Government agencies; develops, produces, and distributes Standard Reference Materials; and provides calibration services. The Laboratory consists of the following centers:

Absolute Physical Quantities[2] — Radiation Research — Thermodynamics and Molecular Science — Analytical Chemistry — Materials Science.

**THE NATIONAL ENGINEERING LABORATORY** provides technology and technical services to the public and private sectors to address national needs and to solve national problems; conducts research in engineering and applied science in support of these efforts; builds and maintains competence in the necessary disciplines required to carry out this research and technical service; develops engineering data and measurement capabilities; provides engineering measurement traceability services; develops test methods and proposes engineering standards and code changes; develops and proposes new engineering practices; and develops and improves mechanisms to transfer results of its research to the ultimate user. The Laboratory consists of the following centers:

Applied Mathematics — Electronics and Electrical Engineering[2] — Mechanical Engineering and Process Technology[2] — Building Technology — Fire Research — Consumer Product Technology — Field Methods.

**THE INSTITUTE FOR COMPUTER SCIENCES AND TECHNOLOGY** conducts research and provides scientific and technical services to aid Federal agencies in the selection, acquisition, application, and use of computer technology to improve effectiveness and economy in Government operations in accordance with Public Law 89-306 (40 U.S.C. 759), relevant Executive Orders, and other directives; carries out this mission by managing the Federal Information Processing Standards Program, developing Federal ADP standards guidelines, and managing Federal participation in ADP voluntary standardization activities; provides scientific and technological advisory services and assistance to Federal agencies; and provides the technical foundation for computer-related policies of the Federal Government. The Institute consists of the following centers:

Programming Science and Technology — Computer Systems Engineering.

[1]Headquarters and Laboratories at Gaithersburg, MD, unless otherwise noted; mailing address Washington, DC 20234.
[2]Some divisions within the center are located at Boulder, CO 80303.

NBS BUILDING SCIENCE SERIES 121

NATIONAL BUREAU
OF STANDARDS
LIBRARY

MAY 13 1980

# Soil Classification for Construction Practice in Shallow Trenching

Felix Y. Yokel

Center for Building Technology
National Engineering Laboratory
National Bureau of Standards
Washington, D.C. 20234

and

Richard L. Tucker
Lymon C. Reese

University of Texas at Austin
Austin, Texas 78712

Prepared for
Occupational Safety and Health Administration
Department of Labor
Washington, D.C. 20210

and

National Institute for Occupational Safety and Health
Department of Health, Education and Welfare
Washington, D.C. 20201

U.S. DEPARTMENT OF COMMERCE, Philip M. Klutznick, Secretary

Luther H. Hodges, Jr., Deputy Secretary
Jordan J. Baruch, Assistant Secretary for Science and Technology

NATIONAL BUREAU OF STANDARDS, Ernest Ambler, Director

Issued March 1980

Library of Congress Catalog Card Number: 80-600014

National Bureau of Standards Building Science Series 121
Nat. Bur. Stand. (U.S.), Bldg. Sci. Ser. 121, 89 pages (Mar. 1980)
CODEN: BSSNBV

U.S. GOVERNMENT PRINTING OFFICE
WASHINGTON: 1980

For sale by the Superintendent of Documents, U.S. Government Printing Office
Washington, D.C. 20402 Price 3.75

Stock Number 003-003-02162-8

(Add 25 percent for other than U.S. mailing)

Soil Classification for Construction Practice in Shallow Trenching

by

Felix Y. Yokel, Richard L. Tucker, and Lymon C. Reese

ABSTRACT

Construction practices in trenching and data on potential causes of trenching accidents are reviewed. A study is made of the soil properties and site conditions that must be identified in order to determine the stability of shored and sloped excavations against cave-ins. Two possible alternate soil classification methods are recommended. The methods are simple enough to be used by construction foremen and at the same time use parameters which can be measured or identified without ambiguity. The classification methods are supplemented by appropriate field tests and correlated with allowable side slopes and lateral soil pressures on shoring.

Key words: Braced excavations; construction; excavation; geotechnical engineering; retaining structures; shoring; slope stability; soil classification; soil pressure; soil testing; trenching.

Cover: *Trenchbox used to protect workers at the bottom of a sloped excavation in sandy soil*

TABLE OF CONTENTS


| | Page |
|---|---|
| ABSTRACT | iii |
| PREFACE | viii |
| EXECUTIVE SUMMARY | ix |
| 1. INTRODUCTION | 1 |
| 2. BACKGROUND INFORMATION | 3 |
| 2.1 GENERAL | 3 |
| 2.2 TRENCHING CHARACTERISTICS AND PRACTICES | 3 |
| 2.2.1 General | 3 |
| 2.2.2 Contractor Characteristics | 4 |
| 2.2.3 Characteristics of Trenching Operations | 4 |
| 2.2.4 Sloping | 4 |
| 2.2.5 Shoring | 5 |
| 2.2.6 Excavation Equipment | 5 |
| 2.3 TRENCH CAVE-INS | 5 |
| 3. SOIL CLASSIFICATION AND CHARACTERIZATION | 7 |
| 3.1 GENERAL | 7 |
| 3.2 SOIL PROPERTIES | 8 |
| 3.3 SOIL CHARACTERIZATION IN CURRENT ENGINEERING PRACTICE IN TRENCHING AND EXCAVATION | 14 |
| 3.3.1 General | 14 |
| 3.3.2 Soils Information Required in Current Engineering Practice | 14 |
| 4. PARAMETERS AFFECTING TRENCH STABILITY | 19 |
| 4.1 THE NATURE OF SHALLOW TRENCHES | 19 |
| 4.2 PARAMETERS AFFECTING THE STABILITY OF TRENCHES | 22 |
| 4.2.1 General | 22 |
| 4.2.2 Secondary Soil Structure | 22 |
| 4.2.3 Site and Working Conditions | 25 |
| 5. RECOMMENDED SOIL CLASSIFICATION SYSTEMS | 31 |
| 5.1 GENERAL | 31 |
| 5.1.1 Purpose | 31 |
| 5.1.2 Criteria | 32 |
| 5.1.3 Existing Classification Systems for Trenching | 33 |

TABLE OF CONTENTS (Continued)


| | | Page |
|---|---|---|
| 5.2 | RECOMMENDED SYSTEMS | 34 |
| 5.2.1 | General | 34 |
| 5.2.2 | Definition of Lateral Pressures and Allowable Sideslopes Associated with the Classification Systems | 35 |
| 5.2.3 | Simplified Classification System | 35 |
| 5.2.4 | Matrix Classification System | 38 |
| 5.3 | FIELD IDENTIFICATION | 38 |
| 5.3.1 | General | 38 |
| 5.3.2 | Visual-Manual Examination | 43 |
| 5.3.3 | Strength Tests | 46 |
| 5.3.4 | Drying Tests | 46 |
| 5.3.5 | Suitability for Spaced Sheeting | 47 |
| 5.4 | CLASSIFICATION PROCEDURES | 47 |
| 5.4.1 | Simplified Classification System | 47 |
| 5.4.2 | Matrix Classification System | 49 |
| 6. | COMMENTARY ON RECOMMENDED SOIL CLASSIFICATION SYSTEMS | 51 |
| 6.1 | GENERAL | 51 |
| 6.2 | ALLOWABLE SIDESLOPES (Figure 5.1) | 51 |
| 6.3 | LATERAL PRESSURE DIAGRAMS (Figure 5.2) | 52 |
| 6.4 | SIMPLIFIED CLASSIFICATION SYSTEM (Table 5.1) | 52 |
| 6.4.1 | Soil Types (Table 5.1) | 52 |
| 6.4.2 | Lateral Soil Pressures (Table 5.1) | 52 |
| 6.4.3 | Allowable Slopes (Table 5.1) | 53 |
| 6.4.4 | Spacing of Spaced Supports (Table 5.2) | 54 |
| 6.5 | MATRIX CLASSIFICATION SYSTEM | 55 |
| 6.5.1 | Soil Classes (Table 5.3) | 55 |
| 6.5.2 | Lateral Soil Pressures (Table 5.4) | 55 |
| 6.5.3 | Allowable Slope (Table 5.4) | 56 |
| 6.5.4 | Spacing of Spaced Supports (Table 5.5) | 56 |
| 6.6 | FIELD IDENTIFICATION | 56 |
| 6.6.1 | Resolution of Conflicts | 56 |
| 6.6.2 | Drying Test (Section 5.3.4) | 57 |
| 7. | REFERENCES | 59 |

TABLE OF CONTENTS (Continued)


| | Page |
|---|---|
| 8. ACKNOWLEDGMENTS | 61 |
| APPENDIX: BACKGROUND INFORMATION ON TRENCHING PRACTICE AND ACCIDENTS | 63 |
| A.1 GENERAL | 64 |
| A.2 BACKGROUND INFORMATION | 64 |
| A.2.1 Sources of Information | 64 |
| A.2.2 The Thompson and Tannenbaum Data | 64 |
| A.2.3 NBS Field Study | 64 |
| A.2.4 Interviews with Selected Contractors | 65 |
| A.2.5 The Associated General Contractors (AGC) Questionnaire [12] | 66 |
| A.2.6 OSHA Compliance Officer Reports for 1973-1974 | 68 |
| A.2.7 Summary of Background Information | 69 |
| A.3 TRENCHING CHARACTERISTICS AND PRACTICES | 69 |
| A.3.1 General | 69 |
| A.3.2 Right-of-Way | 70 |
| A.3.3 Depth | 70 |
| A.3.4 Time and Site Conditions | 70 |
| A.3.5 Codes and Specifications | 71 |
| A.3.6 Sloping | 71 |
| A.3.7 Shoring | 71 |
| A.3.7.1 General | 71 |
| A.3.7.2 Types of Sheathing | 71 |
| A.3.7.3 Wale Systems | 72 |
| A.3.7.4 Bracing Systems | 72 |
| A.3.7.5 Skip Shoring | 73 |
| A.3.8 Trench Boxes | 73 |
| A.3.9 Equipment | 74 |
| A.3.10 Contractor Characteristics | 75 |

## LIST OF TABLES


| | | Page |
|---|---|---|
| Table 3.1 | Soil Descriptions for Trenching | 9 |
| Table 3.2 | Data Required for Soil Identification [17] | 10 |
| Table 3.3 | Properties of Cohesive Soil Correlated with Standard Penetration Test Results [6] | 12 |
| Table 3.4 | Relationship between Properties of Cohesionless Soil and Standard Penetration Test Results [21] | 13 |
| Table 3.5 | Typical Values of Soil Unit Weight [11] | 13 |
| Table 3.6 | Soil Properties that must be Quantified to Calculate Lateral Pressures | 16 |
| Table 5.1 | Simplified Soil Classification System | 39 |
| Table 5.2 | Maximum Center to Center Spacing (in feet) of Spaced Sheeting for Simplified Soil Classification System | 40 |
| Table 5.3 | Soil Classes in Matrix Classification System | 41 |
| Table 5.4 | Minimum Acceptable Stability Requirements for Matrix Soil Classification Systems | 42 |
| Table 5.5 | Maximum Center to Center Spacing in ft. of Spaced Sheeting for Matrix Soil Classification System | 42 |


## LIST OF FIGURES


| | | |
|---|---|---|
| Figure 3.1 | Lateral Soil Pressure Diagrams | 15 |
| Figure 4.1 | Profiles of Cohesive Strength vs. Depth in Normally Consolated and Overconsolidated Clays | 24 |
| Figure 4.2 | Desiccation Effects Observed in Cuts in Clays | 27 |
| Figure 4.3 | Effect of Trench Intersection on Sideslope Stability | 29 |
| Figure 5.1 | Recommended Allowable Configurations of Sloped Excavations | 36 |
| Figure 5.2 | Assumed Diagram of Lateral Soil Pressure Acting on Shoring | 37 |

# PREFACE

In June 1976 the Occupational Health and Safety Administration (OSHA) engaged the National Bureau of Standards (NBS) to study the provisions for Excavation, Trenching and Shoring of the Safety and Health Regulations for Construction [9][1] and to recommend potential modifications that could improve their effectiveness. As part of this study, a team from The University of Texas at Austin studied the problem of soil classification under an NBS Contract and submitted a study report in January 1979 [22]. In a National workshop at the Department of Labor in September 1978 [11a] the preliminary findings of the NBS study, including preliminary recommendations of the Texas study were reviewed and discussed by working groups consisting of contractors, union representatives, consulting engineers, and government officials.

The recommendations presented in this report are based on analytical and field studies by NBS, the University of Texas report, and recommendations and comments made in the workshop.

This work was funded in part by the National Institute for Occupational Safety and Health. The report was prepared by the Geotechnical Engineering Group of the Center for Building Technology.

---

[1] Numbers in brackets identify literature referenced in Section 7.

## EXECUTIVE SUMMARY

As a result of a National Bureau of Standards' study of the problems associated with excavation safety, it has been concluded that there is a need for a simple soil classification system that can be used by field supervisors to make rapid decisions on sloping or shoring requirements. The soil classification system should meet the following criteria: it should be comprehensive (cover essentially all the conditions that could be encountered); it should consider (at least implicitly) all the critical conditions that can cause instability; it should not be ambiguous (two persons classifying a site should arrive at the same conclusion); it should be usable by construction supervisors and OSHA compliance officers in the field without the assistance of an engineer.

Two alternative systems are proposed for consideration; The "Simplified Classification System" and the "Matrix Classification System." The simplified system requires fewer decisions by construction supervisors, but it also somewhat narrows the number of choices available to contractors. The matrix system is more sophisticated and would require better training of construction personnel and OSHA inspectors. The systems are summarized in Tables 1, 2, and 3. The tables contain definitions of soil types as well as stability requirements associated with the various soil types identified. Lateral loads that shoring systems should be designed to resist are defined by the "lateral weight effect" $w_e$ and further explained in Figure 1. Recommended allowable configuration of sloped excavations associated with the steepest allowable side slopes defined in Tables 1 and 3 are shown in Figure 2.

The soil classification systems are also correlated with provisions for spaced sheeting (skip shoring). Simple field identification methods are recommended which can be used to determine the soil type (or class) in the field. These consist of a visual-manual identification method, supplemented when necessary by in-situ strength tests using a pocket penetrometer[2] or a hand operated shearvane and by a drying test which is performed on an undisturbed sample and used to determine whether the soil is fissured and whether it is cohesive or granular. In case of doubt or dispute these simple field tests can be further corroborated by traditional in-situ and laboratory tests.

---

[2] The Pocket Penetrometer is a small (vest-pocket sized) commercially available device that measures in-situ shear strength of cohesive soils.

Table 1. Simplified Soil Classification System

| Soil Type | Description | $w_e$ lb/ft$^3$ [a] | Steepest Slope hor.: vert. |
|---|---|---|---|
| A | Intact Hard | 20 | 3/4:1 |
| B | Medium | 40 | 3/4:1 |
| C | Submerged or Soft | 80 | 1 1/2:1 |

1. Intact Hard Soils (Type A) include stiff clay and cohesive or cemented sands and gravels (hardpan, till)[b] above the groundwater table which have no fissures, weak layers, or inclined layers that dip into the trench. Stiff clays included have an unconfined compressive strength (pocket penetrometer reading) $q_u$ = 1.5 tsf[c] or more. Intact hard soils subject to vibrations by heavy traffic, pile driving or similar effects are Type B.

2. Medium Soils (Type B) are all soils which are not Type A or C.

3. Soft Soils (Type C) include cohesive soils[b] with an unconfined compressive strength (pocket penetrometer reading) of 0.5 tsf[c] or less and soils that cannot stand on a slope of 3 hor. in 1 vert. without slumping (muck).

4. Submerged Soils (Type C) are assumed whenever water drains into the trench from the soil forming the bank, or water is retained by tight sheeting, or there is a possibility that the trench may be fully or partially flooded before workers leave it or may be entered by workers within 6 hours after more than half of its depth was flooded and pumped out.

5. Fractured Rock shall be considered Type B when it is dry and Type C when it is submerged. Intact rock is exempt from shoring and sloping requirements.

6. Layered Systems (two or more distinctly different soil or rock types, micaceous seams in rock) which dip toward the trench wall with a slope of 4 hor.: 1 vert. or steeper are considered Type C. Layered soils are classified in accordance with the weakest layer.

---

a/ lb/ft$^3$ = 1.63 N/m$^3$

b/ Cohesive Soils are clays (fine grained) or soils with a high clay content which have cohesive strength. They do not crumble, can be excavated with vertical side slopes, are plastic (can be molded into various shapes and rolled into threads) when moist and are hard to break up when dry.

c/ 1 tsf = 96 kPa

Table 2. Matrix Classification System

| Site Condition / Soil | Water in Trench: No — Fissures: No | Water in Trench: No — Fissures: Yes | Water in Trench: Yes — Fissures: No | Water in Trench: Yes — Fissures: Yes |
|---|---|---|---|---|
| Stiff Cohesive[a/] | I | II | III | |
| Medium Cohesive | II | III | III | IV |
| Granular[b/] | II | | III | |
| Soft | IV | | IV | |

Notes

1. Water in Trench is assumed whenever water drains into the trench from the soil forming the bank, or water is retained by tight sheeting, or there is a possibility that the trench may become fully or partially flooded before workers leave it or may be entered by workers within 6 hours after more than half its depth was flooded and pumped out.

2. Vibrations: soils subjected to vibrations by heavy traffic, pile driving or similar effects shall always be assumed fissured.

3. Stiff Cohesive Soils[a/] include stiff clays and cohesive or cemented sands and gravels (till, hardpan). Stiff clays included have an unconfined compressive strength (pocket penetrometer reading) $q_u$ = 1.5 tsf[c/] or larger.

4. Medium Cohesive Soils[a/] have an unconfined compressive strength (pocket penetrometer reading) between 0.5 and 1.5 tsf[c/].

5. Granular Soils[b/] are gravels, sands and silts that can stand on a slope steeper than 3 hor.: 1 vert. without spalling or slumping.

6. Fractured Rock shall be treated as granular soil. Intact rock is exempt from shoring and sloping requirements.

7. Soft Soils are cohesive soils with an unconfined compressive strength (pocket penetrometer reading) of 0.5 tsf[c/] or less and silts that can not stand on a slope of 3 hor.: 1 vert. without spalling or slumping (muck).

8. Layered Systems (two or more distinctly different soil or rock types, micaceous seams in rock) which dip toward the trench wall with a slope of 4 hor.: 1 vert. or steeper are considered Class IV soils.

9. Disturbed Cohesive Soils (backfill) shall be treated as fissured medium cohesive or soft cohesive soils

---

a/ Cohesive soils are clays (fine grained) or soils with a high clay content which have cohesive strength. They do not crumble, can be excavated with vertical sideslopes, are plastic (can be molded into various shapes and rolled into threads) when moist and are hard to break up when dry.

b/ Granular Soils have no cohesive strength. They normally cannot be excavated with vertical sideslopes (although some moist granular soils will exhibit apparent cohesion and temporarily stand on a vertical slope), they cannot be molded when moist and crumble easily when dry.

c/ 1 tsf = 96 kPa

Table 3. Minimum Acceptable Stability Requirements for the Matrix Classification System

| Soil Type | $w_e$ lbf/ft$^3$ a/ | Steepest Slope hor:vert. |
|---|---|---|
| I | 20 | 1/2:1 |
| II | 40 | 3/4:1 |
| III | 60 | 1:1 |
| IV | 80 | 1 1/2:1 |

Notes:

1. If there is any indication of general or local instability, slopes shall be cut back to a slope which is at least 1/4 hor.: 1 vert.

2. In layered soils stability requirements are set by the weakest layer.

---

a/ 1 lbf/ft$^3$ = 1.63 N/m$^3$

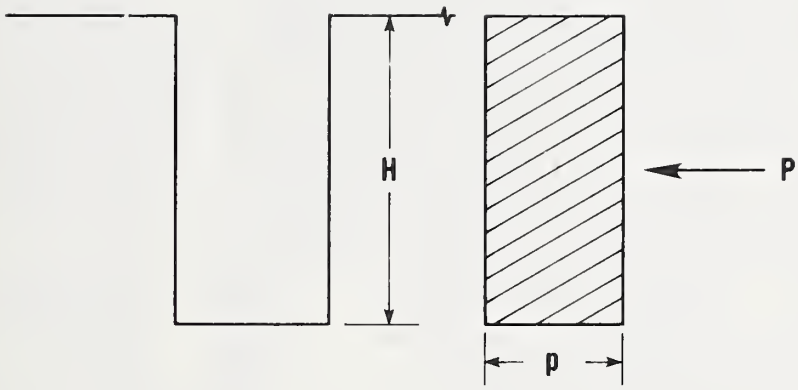


$p = w_e (H+2)$

$P = p \times H$

H = Height of supported bank, ft.
(2 ft. are added to allow for surcharge)

p = Distributed horizontal earth pressure, $lb/ft^2$

P = Resultant horizontal force per unit length lb/ft.

$w_e$ = Lateral weight effect, $lb/ft^3$

Note: 1m = 0.30 ft., 1 lb = 4.5 N, 1 $lb/ft^2$ = 48 Pa,
1 $lb/ft^3$ = 157 $N/m^3$

*Figure 1: Lateral Loads on Shoring Systems*

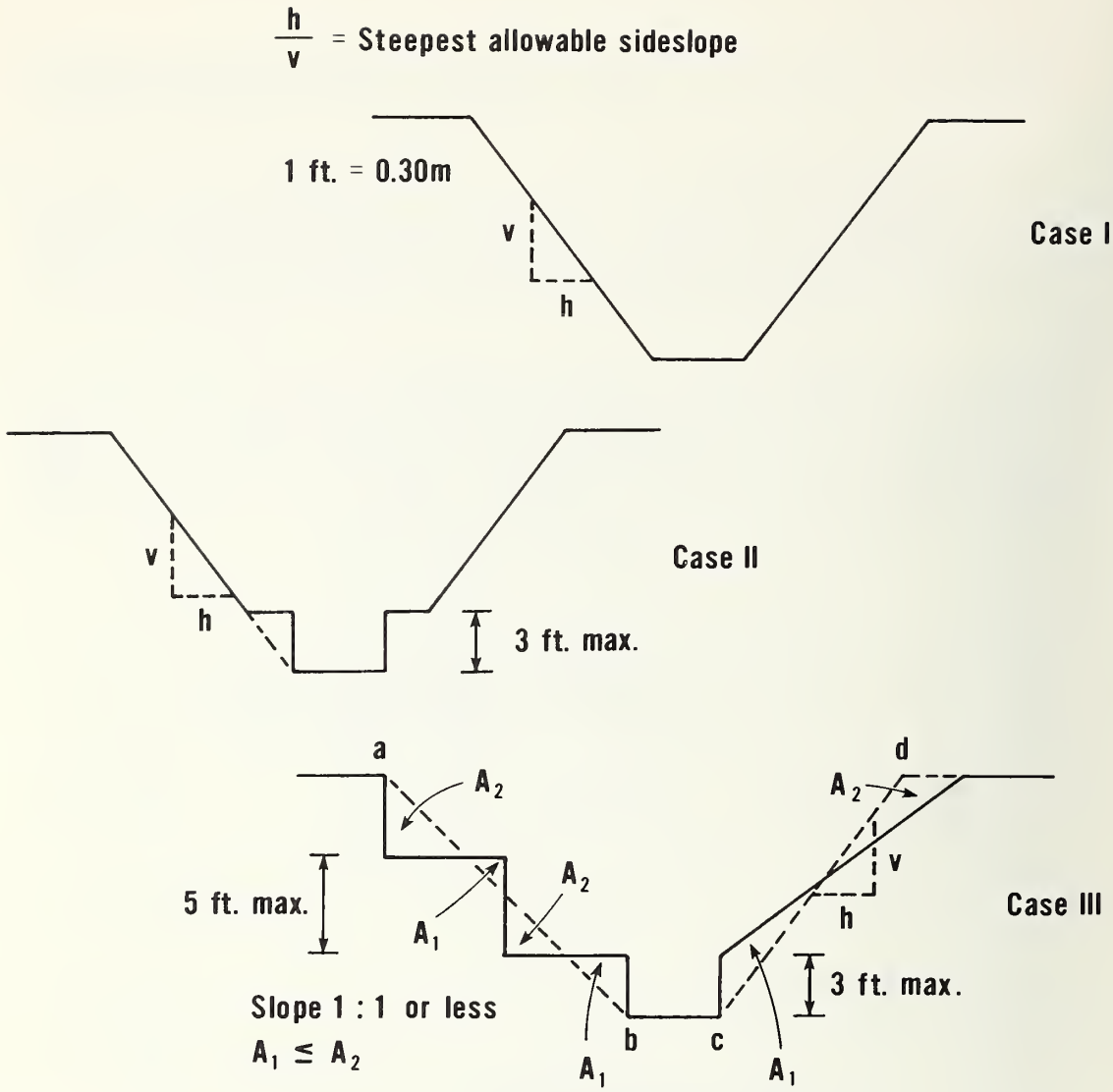


Case I - Ordinary slope

Case II - Compound slope with bench no more than 3 ft. high

Case III - Configuration must meet following criteria:

1. No vertical bank to exceed 5 ft., the bank adjacent to the work area not to exceed 3 ft.
2. Imaginary slopes ab and cd not to exceed max. allowable. If steps are used (left side of III) imaginary slope (ab) not to exceed 1 : 1
3. Excavated area equal to or greater than area within abcda

*Figure 2: Allowable Slope Configurations*

---

Facing page: *Before back-filling a sloped trench in clayey soil, a worker covers the utility pipe which has been placed in it.*

## 1. INTRODUCTION

Each year more than 100 lives are lost in the U.S. and many more injuries occur as a result of excavation cave-ins. Of these fatalities over 87 percent occur in trenches less than 20 ft. (6 m) deep [18]. The implementation of the Occupational Safety and Health Administration (OSHA) regulations for Excavation, Trenching and Shoring [9] so far has had no observable effect on the number of trench fatalities [19]. Part of this lack of success is attributable to the difficulties encountered in the interpretation and implementation of these regulations.

A field study conducted by the National Bureau of Standards [7] indicates that one of the major complaints received from contractors is that the soil classification in subpart P of the OSHA Regulations for Excavation, Trenching and Shoring [9] is too vague and that numerous disagreements between contractors and compliance officers arise over identification of

soil types. Most contractors expressed willingness to cooperate with OSHA but were confused about the applicability of the present regulations, particularly those in Table P-1 of the regulations, to their particular construction sites [22].

Data on the correlation of various soil types with accident rates are difficult to obtain. A review of selected Occupational Safety and Health Review Commission cases [22] indicated that data concerning soil types were generally not recovered in the reports on fatal accidents. Thompson and Tannenbaum [18] conducted a survey of 86 newspapers in order to determine the soil types associated with trench and excavation cave-ins. The data indicate the following correlation between soil type and frequency of accidents.

| Soil Type | No. of Accidents |
|---|---|
| Clay and/or Mud | 32 |
| Sand | 21 |
| Wet dirt (probably silty sand) | 10 |
| Sand, gravel and clay | 8 |
| Rock | 7 |
| Gravel | 4 |
| Sand and gravel | 2 |

The source of these data raises some questions since soils were generally not identified by qualified persons; however, the report does provide an indication that there is a strong correlation between the soil type encountered and the risk of a fatal accident.

Utility contractors tend to be familiar with the soil conditions in their particular areas and frequently use generic names such as "Del Rio Clay," "Taylor Marl," etc. These generic descriptions cannot always be easily correlated with the soil categories used in the OSHA regulations. Thus, there is frequently no common language between the utility contractors and OSHA compliance officers.

The purpose of this report is to recommend soil classification systems which could adequately relate shoring and sloping requirements to the soil type encountered in the field, and which could provide a common language between contractors, engineers, and compliance officers. General background information is given in Section 2. Methods of soil classification and characterization and parameters affecting the safety of trenching operations are discussed in Sections 3 and 4. In Section 5 two alternate soil classification systems are recommended, and Section 6 is a commentary on the recommended soil classification systems. Detailed background information on trenching practices and accidents which was assembled in the Texas study [22] is provided in the Appendix.

Facing page: *Backhoe used to excavate sloped trench*

## 2. BACKGROUND INFORMATION

### 2.1 GENERAL

A detailed summary of background information and its sources is given in Appendix A to this report to enable the reader to familiarize himself with the trench stability problem. Information pertinent to soil classification is summarized in this section. The information has been derived from references 7, 12, 18, 19, 20 and 22.

### 2.2 TRENCHING CHARACTERISTICS AND PRACTICES

#### 2.2.1 General

As noted in the introduction, most fatalities from cave-ins occur in excavations less than 20 ft (6 m) deep. The majority of these accidents

occur in utility trenches which are less than 12 ft (4 m) deep (mostly sewer trenches). The information provided herein is therefore confined to utility-trench excavations.

### 2.2.2 Contractor Characteristics

Utility contractors typically bid on projects within a 50 to 75 mile (80--120 km) radius from their home base. Their companies tend to be relatively small and stable, and their crews, and particularly their foremen, have typically many years of experience in trenching within their area. The contractors tend to specialize in one type of trenching work and their machinery and the experience of their crews are key factors in their decision on the methods to be employed to obtain trench stability.

### 2.2.3 Characteristics of Trenching Operations

For all but very large diameter lines, pipe laying is a dynamic operation, moving at a rate of several hundred feet per day. Soil structure, moisture content, and related factors therefore tend to change frequently requiring rapid decisions on methods of sloping or shoring to cope with these changing conditions. As a consequence most firms rely on their job foremen and equipment operators for on-the-spot decisions on sloping or shoring. Foremen normally have a thorough working knowledge of the physical characteristics of soils in their area. Shoring methods tend to be developed on the basis of this experience and shoring systems are employed without detailed design and analysis.

Pipe laying and backfilling operations tend to follow closely behind the trenching. As a result less than 100 ft (30 m) of trench are normally open at any one time. The time elapsed between opening of a trench and backfilling after completion of the pipe laying operation is on the average less than 2 hours and seldom exceeds one day. However, smaller trenches, such as those for sewer connections to individual houses, are sometimes open for longer periods, if the excavation and the pipe laying are carried out by different contractors. A similar situation occurs where two trenches intersect. In such locations backfilling may be delayed until the lateral pipeline is connected.

### 2.2.4 Sloping

Sloping is the contractor's preferred method of trench stabilization, since it reduces contruction material handling and provides the most reliable personnel protection. Sloping is normally performed by hydraulic backhoes. The choice of the angle at which banks are sloped is usually at the discretion of the backhoe operator, who is rarely aware of the exact slope angle required by the OSHA regulations [9], but instead relies on his own experience and knowledge of the soil conditions.

### 2.2.5 Shoring

Shoring is employed where sloping is not feasible or economical because of right of way restrictions, adjacent structures or trench depth (sloping is difficult and uneconomical for deep trenches). Sometimes the bottom portion of a trench is shored and the upper part sloped. The width of shored trenches seldom exceeds 6 ft (2 m). Details on shoring systems presently used are provided in Appendix A.

### 2.2.6 Excavation Equipment

Backhoes are by far the most widely used and most versatile excavating machines. They are suitable for vertical-side as well as sloped trenches and permit the operator to deal conveniently with changing conditions. In very regular trenches where there are no abrupt changes in sideslopes or depth, wheel or ladder type trenching machines are used. These machines are capable of relatively fast digging with accurate controls for the depth and width of the excavation. In some instances, where the trench is deep or the spoil pile is far from the trench, draglines are used.

## 2.3 TRENCH CAVE-INS

Correlations between soil conditions and trench cave-ins have been discussed in Section 1. The greatest safety hazards identified by contractors can be rank-ordered as follows: Disturbed soils (by previous excavations, usually unknown to the contractor); intersecting trenches; narrow right of way; vibrations (usually by construction equipment); increased seepage of subsurface water; rainfall; drying of exposed trench walls; and inclined layers of soil dipping into the trench. Records also indicate that many accidents occur during installation and removal of shoring. Sometimes cohesive soils which are disturbed or fissured stand up long enough to permit workers to enter the trench but subsequently collapse.

It is significant that the records indicate that most injured workers were mature individuals. Thus, the number of accidents involving older, and presumably more experienced, personnel tends to refute the argument that experience is an adequate factor in judging trench wall stability.

Facing page: *Spot bracing in dense clayey silt*

# 3. SOIL CLASSIFICATION AND CHARACTERIZATION

## 3.1 GENERAL

A great number of soil classification systems have been introduced over the years to serve a variety of purposes. Many of these systems are still in use today. The type of system used in any particular instance usually depends on the soil properties that need to be characterized.

The soil properties that are presently most commonly described by classification systems are grain size distribution, plasticity, and organic content. These can be obtained from analysis of disturbed soil samples. Pedological classification systems used for agriculture generically describe the stratification and drainage characteristics of the upper soil horizons. Soil characterization for most engineering purposes

needs to describe the undisturbed in-situ soil conditions such as density of granular soils or consistency of clays and is frequently provided as an addition to the soil classification by one of the conventional systems.

The Unified Soil Classification System ("Standard Method for Classification of Soils for Engineering Purposes," ASTM D2487-69) [2] has gained wide acceptance in the engineering community. For engineering purposes this classification is supplemented by information on density or consistency, or by direct measurements of the shear strength of the soil. In the Unified Classification System the soil classification is based on grain size distribution, plasticity (Atterberg Limits) and organic content. Soils are generally classified as "coarse-grained (sands and gravels)," "fine grained," or "organic". Fine grained soils are further classified into different types of silt and clay on the basis for their plasticity.

A less precise field identification system which is widely used for engineering purposes is the "Recommended Practice for a Visual Manual Procedure for Description of Soils," (ASTM D2488-69) [1]. The recommended practice is based on field identification by appearance and by simple tests which, although approximate in nature, provide a quantitative measure of the soil strength. Thus, this system provides a simple and approximate method of identification of those properties which need to be characterized for engineering purposes.

Table 3.1 compares various classification methods presently used in published standards for trenching. No quantitative values are given in the table. The coexistence of these classification methods causes considerable confusion and the terminology used is difficult to correlate with conventional classification techniques or accepted engineering practice.

## 3.2 SOIL PROPERTIES

Terzaghi and Peck [17] list 18 properties which should be determined to identify soils. These properties are shown in Table 3.2, together with checkmarks indicating which of the properties would be used to identify any one of 15 different soil types. However, not all the properties listed in Table 3.2 are identified in presently used classification systems.

Most classification systems, including the Unified Classification System [2], describe soils in terms of their particulate properties. The information gained from the tests associated with this type of classification is from disturbed samples and therefore can not completely describe the in-situ behavior of the undisturbed soil. The information does however provide a basis for determining whether a soil is granular (derives its strength primarily from intergranular friction, has little strength when soil is unloaded, strength increases rapidly when soil is

Table 3.1 Soil Descriptions for Trenching

| OSHA [9] | | CAL OSHA [4] | | |
|---|---|---|---|---|
| Table P-1 | Table P-2 | Sect 1541 | Appendix C | Wisconsin OSHA [24] |
| | | | | Rock |
| Solid rock, shale or cemented sand and gravel | Hard, compact | Hard, compact | All soils except wet sands, saturated soil and soft plastic clays | Hard, Solid |
| Compacted angular gravel | | | | Soil that splits easily |
| Average soil | Likely to crack | | | Gravelly or filled in gravel |
| Compacted sharp sand | | Unstable | Wet sands | Sand or very wet soil |
| Loose rounded sand | Soft, sandy, filled | | | |
| | Hydrostatic pressure | Running | Saturated soil soft and plastic clay | |

Table 3.2

Data Required for Soil Identification [17]

| Type of Soil | General Information | | | | | | Results Classification Tests | | | | | | | | | | | |
|---|---|---|---|---|---|---|---|---|---|---|---|---|---|---|---|---|---|---|
| | | | | | | | Intact Samples | | | | | | Disturbed Samples | | | | | |
| | Color | Odor | Texture | Dilatancy | Grain properties | Dry strength | Natural void ratio e | Natural water content w | Unit weight, natural state $\gamma$ | Unit weight, oven-dried $\gamma_d$ | Unconf. compressive strength $q_u$ | Sensitivity $S_t$ | Max. void ratio $e_{max}$ | Min. void ratio $e_{min}$ | Liquid limit $L_w$ | Plastic limit $P_w$ | Mechanical analysis | Carbonate content |
| Hardpan | X | | X | | X | | | | X | | | | | | | | | |
| Sand, gravel | X | | | | X | | X | | | | | | X | X | | | X | |
| Inorganic silt | X | | X | X | | X | | X | X | X | X | X | | | X | X | X | X |
| Organic silt | X | X | X | X | | X | | X | X | X | X | X | | | X | X | X | X |
| Clay | X | | X | | | X | | X | X | X | X | X | | | X | X | | X |
| Organic clay | X | X | X | | | X | | X | X | X | X | X | | | X | X | | X |
| Peat | X | X | X | | X | | | | X | X | | | | | | | | |
| Till | X | | | | X | | X | X | X | | | | X | X | | | X | |
| Tuff, fine-grained | X | | X | | | X | | | X | X | X | X | | | X | X | X | |
| Loess | X | | X | X | | X | X | X | X | X | X | | X | X | X | X | X | X |
| Modified loess | X | | X | X | | X | X | X | X | X | X | | X | X | X | X | X | X |
| Adobe | X | | X | X | | X | X | X | X | X | X | | X | X | X | X | X | X |
| Marl | X | | X | X | | X | | X | X | X | X | X | | | X | X | X | X |
| Lake marl | X | | X | X | | X | | X | X | X | X | X | | | X | X | X | X |
| Gumbo | X | | X | | | X | | X | X | X | X | X | | | X | X | X | X |

loaded) or cohesive (derives its strength primarily from interparticle cohesion, has strength when unloaded, its strength changes slowly when it is loaded). The soil properties most often used in engineering design are those associated with strength, in-place unit weight, compressibility and permeability. Most of these properties can be correlated with the relative density of sands and the consistency of clays, and all the properties are related to the undisturbed (in-situ) condition of the soil. Their measurement is either performed by in-situ tests or by laboratory tests on undisturbed samples.

Since most conventional classification systems do not convey information on these properties, they have to be supplemented by additional information. It may be noteworthy to mention that when soil is used as a structural or borrow material (engineered fills) information on the particulate properties tends to be more important than information on in situ properties. In this case conventional classification systems are extremely useful. However this case is not germain to the excavation problem.

Typical values of strength properties and in-situ unit weight and their correlation with the relative density of sand or the consistency of clays and with widely used in-situ tests are given in Tables 3.3, 3.4 and 3.5. The following symbols are used in the tables:

$D_r$ = relative density, percent $= \frac{\gamma_{dmax}}{\gamma_d} \cdot \frac{\gamma_d - \gamma_{dmin}}{\gamma_{dmax} - \gamma_{dmax}} \cdot 100$

$k_a$ = coefficient of active earth pressure $= \tan^2 (45 - \frac{\phi}{2})$

$\overline{N}$ = blowcount (per foot) in Standard Penetration Test [3]
$\phi$ = angle of shearing resistance, degrees
$\gamma$ = in place unit weight, $lb/ft^3$
$\gamma_d$ = dry unit weight, $lb/ft^3$
$\gamma_{dmax}$ = maximum dry unit weight $lb/ft^3$
$\gamma_{dmin}$ = minimum dry unit weight, $lb/ft^3$
$\gamma_{sat}$ = unit weight of undisturbed soil in saturated state, $lb/ft^3$
$\gamma_{sub}$ = in place bouyant unit weight, $lb/ft^3 = \gamma_{sat} - \gamma_w$
$\gamma_w$ = unit weight of water, $lb/ft^3$

Table 3.3 shows approximate strength parameters for clays and their correlation with consistency and with two widely-used in situ tests: the thumb penetration test (ASTM D2488-69) [1] and the Standard Penetration Test (SPT) (ASTM D1586-67)[3]. The correlation between the $\overline{N}$-values of the Standard Penetration Test and the properties of clay should be regarded as no more than a crude approximation which is not always reliable. However the values for sands shown in table 3.4 are much more reliable and are frequently used for engineering design. This is particularly true since undisturbed samples of sand are difficult to take and the relative density ($D_r$) is a parameter which can not be easily

Table 3.3. Properties of Cohesive Soil Correlated with Standard Penetration Test Results [6]

| Clay Consistency | Identification (ASTM D2488-69) | SPT, $\overline{N}$ blows/ft | Undrained Shear Str. $lbf/ft^2$ | Unconfined Compressive Strength $lbf/ft^2$ |
|---|---|---|---|---|
| Very soft | Easily penetrated several inches by fist. Exudes between fingers when squeezed in hand. | <2 | 250 | 500 |
| Soft | Easily penetrated several inches by thumb. Molded by light finger pressure. | 2-4 | 250-500 | 500-1000 |
| Medium | Can be penetrated several inches by thumb with moderate effort. Molded by strong finger pressure. | 4-8 | 500-1000 | 1000-2000 |
| Stiff | Readily indented by thumb but penetrated only with great effort. | 8-15 | 1000-2000 | 2000-4000 |
| Very stiff | Readily indented by thumb nail | 15-30 | 2000-4000 | 4000-8000 |
| Hard | Indented with difficulty by thumbnail | >30 | >4000 | >8000 |

Note: 1 ft = 0.30 m

1 $lbf/ft^2$ = 48 Pa

Table 3.4 Relationship between Properties of Cohesionless Soil and Standard Penetration Test Results [21]

| Soil Type | SPT, $\overline{N}$ blows/ft | Relative Density $D_r$% | $\phi$ (after Peck) | $k_a$ |
|---|---|---|---|---|
| Very loose sand | <4 | 0-15 | 29° | >0.35 |
| Loose sand | 4-10 | 15-35 | 29-30° | 0.35-0.33 |
| Medium dense sand | 10-30 | 35-65 | 30-36° | 0.33-0.26 |
| Dense sand | 30-50 | 65-85 | 36-41° | 0.26-0.21 |
| Very dense sand | >50 | 85-100 | >41° | <0.21 |

Approximate soil weights are given in Table 4.5.

Note: 1 ft = 0.30 m

Table 3.5 Typical Values of Soil Unit Weight [11]

| Soil Type | Moist Unit Weight Above Water Table, $\gamma$(lb/ft$^3$) | Saturated Unit Weight Below Water Table $\gamma_{sat}$(lb/ft$^3$) |
|---|---|---|
| Poorly graded sand | 105-115 | 115-125 |
| Clean well graded sands | 115-125 | 125-130 |
| Silty or clayey sand & gravel | 125-135 | 130-145 |
| Soft to medium clay | 100-115 | 100-115 |
| Stiff to very stiff clay | 110-125 | 110-125 |
| Organic silt or clay | 90-100 | 90-100 |

$\gamma_{sub} = \gamma_{sat} - \gamma_w$

$\gamma_w = 62.4$ lb/ft$^3$

Note: 1 lb/ft$^3$ = 16 kg/m$^3$

measured in the laboratory. In the case of clay unconfined compression tests [ASTM D2166-66 (1972)] or other laboratory strength tests on undisturbed samples give reasonably good results, and simple in-situ tests such as cone penetration (ASTM D3441-75T) and vane shear tests (ASTM D2573-72) have been successfully used. It should be noted that the $\bar{N}$ values given in Tables 3.3 and 3.4 are representative of those obtained in traditional U.S. practice (rope and cathead). Adjustments should be made if other methods (such as trigger release hammers) are used. In Table 3.5 typical values for soil unit weight are given and correlated with various soil types.

## 3.3 SOIL CHARACTERIZATION IN CURRENT ENGINEERING PRACTICE IN TRENCHING AND EXCAVATION

### 3.3.1 General

The purpose of this discussion is not to provide a comprehensive review of current engineering practice and of available data, but rather to identify those soil properties which need to be quantified or defined if lateral soil pressures are to be calculated or slope stability determined in accordance with current engineering practice.

### 3.3.2 Soils Information Required in Current Engineering Practice

Figure 3.1 shows typical pressure diagrams extensively used in present U.S. engineering practice to calculate lateral loads on excavation bracing. Diagram (1) is for sands; Diagram (2) is for soft to medium clays; Diagram (3) is for stiff clays; and Diagram (4) is for dense cohesive (cemented) sands or for very stiff sandy clays for two different conditions which are specified in the figure. The symbols used in the figure are those previously used in tables 3.3-3.5. Additionally:

c = cohesion (cohesive strength)
H = depth of excavation
m = lateral force coefficient
N = "Stability number" = $\gamma H/c$

The diagrams in Figure 3.1 are widely accepted in current engineering practice; however, they are not the only pressure diagrams used. Other types of pressure distribution, such as those proposed by Tschebotarioff [21] also have gained wide acceptance. The following discussion of the soil properties that need to be defined in order to use the pressure diagrams in Figure 3.1 equally applies to these other approaches.

It is important to identify those soil properties which need to be quantified or defined in order to apply the pressure diagrams in Figure 3.1 to any specific case. These properties are shown in Table 3.6. The bracketed checkmarks are for properties which may have to be defined in order to identify the "soil type."

1. Sands Ref [10]

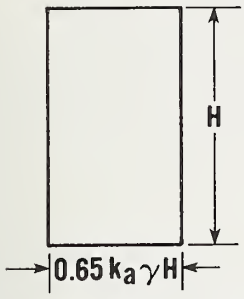


$k_a = \tan^2(45 - \phi/2)$

2. Soft to medium clays, when N > 6 (if pressures calclated under 3. using 0.4 $\gamma H$ are larger, use 3.)

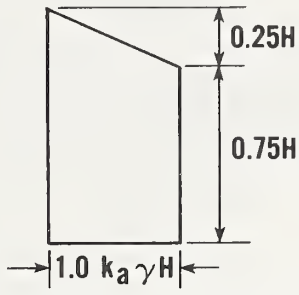


$N = \frac{\gamma H}{c}$ $\quad k_a = 1 - m \frac{4}{N}$

When cut is underlain by deep, soft, normally consolidated clays: m=0.4 All other cases: m=1.0

3. Stiff clays, whenever N < 4. (if 4 < N < 6 use 2. or 3., whichever gives larger pressures)

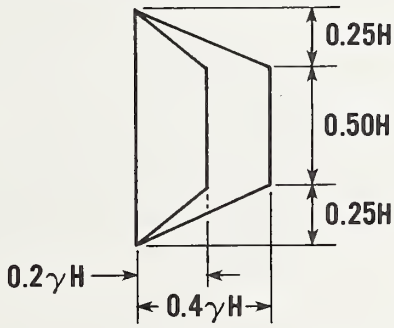


4. Dense cohesive sands, very stiff sandy clays *

Relatively uniform

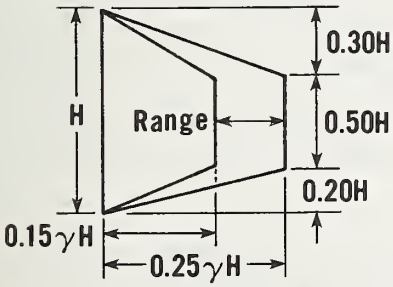


Upper third of cut dominated by cohesionless sands

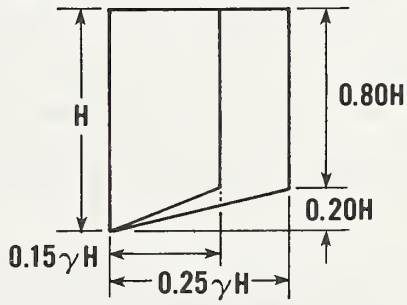


*Diagrams 1, 2, and 3 after Peck (1969)[10], Diagram 4 after Goldberg et.al. (1976)[6]*

*Figure 3.1: Lateral Soil Pressure Diagrams*

Table 3.6. Soil Properties That Must Be Quantified to Calculate Lateral Pressures

| Soil Type \ Property | $\gamma$ | $\phi$ | c |
|---|---|---|---|
| Sand | ✓ | ✓ | |
| Soft to Medium Clay | ✓ | | ✓ |
| Stiff Clay | ✓ | | (✓) |
| Dense Cohesive Sand | ✓ | (✓) | |
| Very Stiff Sandy Clays | ✓ | | (✓) |

Another engineering problem associated with trenching and excavations is slope stability. The soil properties that need to be quantified in order to determine slopes that will be stable without shoring are the angle of shearing resistance, $\phi$,for granular soils, and the cohesion,c, the angle of shearing resistance, $\phi$, and the in-place unit weight, $\gamma$, for cohesive soils. Another important parameter in cohesive soils which is not strictly a "soil property" is the depth to which tension cracks (fissures) extend from the surface.

Certain soil properties must be defined or quantified in order to determine the "soil type" in Table 3.6. A determination must be made whether the material is a "clay" or a "sand", or rather whether it should be considered a cohesive material where the lateral forces are calculated on the basis of the cohesion c, and $\phi$ is assumed to be small or negligible, a non-cohesive material where c is assumed to be small or negligible and the forces are calculated on the basis of $\phi$ alone, or a "cohesive sand" or "sandy clay" where both, c and $\phi$ should be considered. If the material is classified a "clay" a decision must be made whether it is "soft or medium," "stiff", or "very stiff". This determination is based on the value of the undrained shear strength (c) as shown in Table 3.3.

There are several methods by which the soil properties discussed above can be determined. The value of $\phi$ in sands correlates with the "relative density", $D_r$, a property which is not easily measurable in the laboratory. It does however correlate reasonably well with a number of in situ measurements such as the Standard Penetration Tests [3], cone penetration tests and pressure meter tests. The angle of shearing resistance, $\phi$, could also be deduced from the observed angle of repose, (however, if sands are moist, the angle of repose could be steeper because of apparent cohesion), or it could be determined by laboratory tests, though it is difficult to secure undisturbed samples of sands or otherwise reproduce the in-situ density. Sowers and Sowers [15] proposed a manual procedure to determine the density of sands.

Values of c for clays can be determined by a variety of methods. Two methods, the thumb penetration test and the Standard Penetration Test (SPT) are shown in Table 3.3; however the SPT is generally not recommended for this purpose. Other in-situ methods include vane shear tests, cone penetration tests and pocket penetrometer tests. Determination of

c by laboratory tests on undisturbed samples such as the unconfined compression test tend to be quite reliable.

In conclusion it should be noted that the important parameters associated with present engineering practice related to excavation are all dependent on density or consistency. Neither of these parameters is considered in the commonly used soil classification methods, with the exception of the manual and visual procedures specified in ASTM D2488-69.

Facing Page: *Skeleton sheathing with prefabricated strut-wale assembly*

# 4. PARAMETERS AFFECTING TRENCH STABILITY

## 4.1 THE NATURE OF SHALLOW TRENCHES

In section 3.2 current engineering practice in calculating lateral soil pressures and slope stability for excavations was discussed, together with the soil properties that need to be determined in order to apply this practice. The so-called "pressure envelopes" shown in Figure 3.1 were developed on the basis of measured data such as those in Reference [5] which originated from deep excavations (deeper than 20 ft). Because of the time element usually associated with such excavations, the data are from excavations which were open for weeks or even several months. There are fundamental differences between such excavations and typical shallow utility trenches which are subsequently discussed.

(1) Depth

One of the effects of depth on the nature of the lateral-pressure envelope is recognized in Figure 3.1. A dimensionless parameter, defined as the "stability number" $N = \gamma H/c$ is introduced for cohesive soils. A vertical cut can stand without external support when $N \leq 4$ or the depth $H \leq 4c/\gamma$. Thus whenever the depth of the excavation is less than this "critical" depth an arbitrary decision has to be made with respect to the lateral forces that the bracing should be designed to resist, since theoretically these forces are zero. This problem is recognized in Figure 3.1 and guidance is provided in Figure 3.1 (3). For a stiff clay c is from 1000 to 2000 psf (48-96 kPa). If we assume that the in-place unit weight $\gamma$ is between 100 and 150 $lb/ft^3$ (1600-3200$kg/m^3$) the corresponding critical depth is 40-50 ft (12-15 m). For a very soft clay of c = 250 psf (12 kPa) the critical depth would be about 10 ft (3m). Since most utility trenches that need to be braced are sewers which tend to be on the average 10 ft (3 m) deep, and most clays tend to have cohesive strengths far in excess of 250 psf (12 kPa) it is evident that in the majority of cases shallow trenches in cohesive soils can stand at least temporarily without support. One conclusion that can be drawn from this observation is that it will be extremely difficult to make meaningful measurements of forces acting on shallow-excavation bracing in cohesive soils. This is probably one of the reason for the absence of data. The observation also casts some doubts on the relevance of present engineering practice in excavations to the special case of shallow trenches.

It is also important to recognize the effect of depth on soil characteristics. Even in areas where soil conditions are relatively uniform, a condition that is typical for many clay areas, the upper soil horizons differ in character from deeper layers. There is the zone of active plant life where organic materials accumulate and root systems break up the soil structure. In addition, soil layers near the surface are subject to oxidation, leaching, desiccation, frequent volume changes by alternate wetting and drying and frost action, and to many other disturbances. Thus cohesive soils near the surface tend to be disturbed by fissures and tension cracks. Desiccated and fissured stiff or medium clays may not have any cohesion left and therefore could act like a granular soil. In some instances surface water penetrates into tension cracks in otherwise intact clays and causes sudden increases in lateral pressures. The effect of this disturbed zone may not be very significant in a deep excavation where it constitutes a relatively small portion of the overall depth, but it may dominate the behavior of a shallow trench. Frequently, when engineering soil properties are determined by in situ tests or laboratory tests on volumetric samples, the test results will not reflect the effects of structural disturbances such as tension cracks which have a dominant influence on the magnitude of lateral forces.

(2) Time

It has already been noted that the measurements on which Figure 3.1 is based were taken in excavations which were open for a long period of

time. On the other hand the typical utility trench is open for less than two hours. In many instances, even if a condition exists that would lead to failure in a long term excavation, the failure in a short term excavation will not develop before the backfill is placed. This is true for clays as well as sands. Moist sands frequently have cohesive strength (apparent cohesion). Under these conditions excavations will be temporarily stable with sideslopes that would slump with a change in moisture content (either dryer or wetter conditions) and the forces exerted on excavation bracing are also smaller in the short term. This transient condition can not be relied on in engineering practice, but it plays an important role in construction.

(3) Excavation Methods

It has been shown [16] that the distribution of soil pressures on retaining structures is influenced by the deformations and displacements that the retaining structure will undergo after the load is applied and by the restraints on the deformation of the retained soil mass. Thus the pressure distribution against a rigid retaining wall tends to be triangular when the top of the wall is allowed to rotate away from the retained soil and parabolic if the bottom rotates out. The magnitude of the pressures corresponds to the active pressure if the retained soil mass is allowed to expand out sufficiently, the passive pressure if the wall is pushed toward the soil mass to the verge of failure and the prevailing in-situ pressure if no movement is allowed to occur. Thus the pressure diagrams shown in figure 3.1 are not independent of the displacements that occurred in the soil mass during excavation and the magnitude of the preloading forces on the struts.

In present deep-excavation practice the struts (cross braces) are placed and preloaded while the excavation is in progress. This effectively restrains the displacements near the top of the excavation. As the excavation progresses downward significant inward displacements do occur near and below the bottom of the excavation [8] but they are restrained as each successive tier of cross braces is placed and preloaded. On the other hand shallow trenches are typically excavated to their full depth before cross braces are placed. This may cause lateral pressures to decrease in many instances; however in some other instances it may promote the development of fissures. In some types of shallow trench bracing, such as trench boxes, the protective sheeting may actually exert no thrust on the side of the excavation, and in many cases a void remains between the side of the excavated trench and the sheeting. In this instance pressure will only be exerted if the sides of the excavation move in as a result of deformation, a general shear failure, or the localized separation of some volume of soil.

Thus, it is reasonable to assume that the magnitude and distribution of soil pressure on shallow-trench bracing may significantly differ from that shown in Figure 3.1.

## 4.2 PARAMETERS AFFECTING THE STABILITY OF TRENCHES

### 4.2.1 General

In Section 3 the soil properties which must be identified in present engineering practice are discussed. The subsequent discussion in 4.1 draws a distinction between deep excavations and shallow trenches, and identifies some other parameters which affect the behavior of shallow trenches. It is convenient to divide the parameters which affect the behavior of shallow trenches into three categories.

1. The primary soil properties which generally characterize the soils as seen at a point within the soil mass or within a small volumetric element that is tested in the laboratory.

2. The secondary soil structure which characterizes the soil or rock mass adjacent to the excavation or rather that part of the soil mass which could affect the stability of the trench.

3. Site and working conditions which affect trench stability.

Primary soil properties are discussed in Section 3. Some of the important effects of secondary soil structure are discussed in Section 4.1. Other effects of the secondary soil structure as well as site and working conditions are discussed hereafter.

### 4.2.2 Secondary Soil Structure

#### (1) Discontinuities

Discontinuities are sometimes of a magnitude which escapes visual identification and may cause planes of weakness in a soil mass which are not detected in laboratory sized samples. This is perhaps best illustrated by an example from Reference [22]. A severely jointed clay with slickensides in Houston, Texas was classified as a highly plastic clay (CH) in accordance with the Unified Soil Classification System (ASTM D2487-69). Undisturbed samples taken at their natural water content in the in-situ condition before soil disturbance by excavation had an unconfined compressive strength of 4 tons/ft$^2$ (383 kPa). Observations indicate that when trenches are excavated this soil becomes unstable and fissured. Laboratory and field investigation of the soil in its fissured condition showed that the cohesion approaches zero. This clay would eventually behave like a granular soil [14]. The development of fissures is particularly pronounced when the soil is allowed to expand laterally and when changes in water content weaken its shear strength.

Another type of discontinuity causes problems in rock excavations. The bonding between bedding planes or across other discontinuities is sometimes very weak or non-existent due to erosion or presence of weak materials such as micaceous layers or clay seams. When these planes slope toward the side of an excavation the shear stresses in the direc-

tion of the discontinuity may exceed the shear resistance provided by friction and bond. The situation is sometimes aggravated by excess pore water pressure and by the lubricating effects of seepage, micaceous materials and clay seams. The danger is particularly great when the excavation is classified as a rock excavation and therefore not braced.

(2) Overconsolidation

Soils which have been subjected to loads greater than those presently exerted by the overburden are overconsolidated. Overconsolidation can be caused by glaciation (weight of ice), tectonic movements, erosion, desiccation and other effects. Most surface deposits of clay are overconsolidated by desiccation [13]. The potential effect of this overconsolidation on the relationship between shear strength and depth is shown in Figures 4.1(a) and (b) which show frequently observed profiles of cohesive strength versus depth for overconsolidated and normally consolidated clays, respectively (clays are normally consolidated when present vertical pressures were not exceeded in the past). Note that in Figure 4.1(b) the cohesive strength decreases with depth up to a certain depth. If a trench is excavated under these conditions the bottom of the trench, where the soil is subjected to the greatest shear stresses, may be located in the region of least shear strength. The soil conditions shown in Figure 4.1(b) may also lead to erroneous conclusions with respect to the critical height at which an unsupported vertical slope will stand without collapsing.

Overconsolidated clays frequently exhibit high in-situ permeability. An example of this condition was encountered in an area about 45 miles northeast of Austin, Texas [22]. An undisturbed sample resembled canned solid white tuna in that it broke and crumbled in a similar manner. Water placed on the sample quickly passed through the clay. An unconfined compression test at the natural moisture content showed an unconfined compressive strength in excess of 3 tons/ft$^2$ (287 kPa). However when additional water was added the sample began to disintegrate. The sample taken in this instance was highly fissured. However other available evidence indicates that water may rapidly flow through apparently unfissured samples as well, and an increase in water content will result in a significant decrease in shear strength.

Since overconsolidation of surface deposits of clays is a common phenomenon, an allowance for this possibility should be made when soils are classified for the purpose of trenching. The limitation of unbraced cuts to a five foot (1.5 m) depth is reasonable for most conditions; however in some instances precautions against sudden collapse caused by water penetration may be necessary even for very shallow depths.

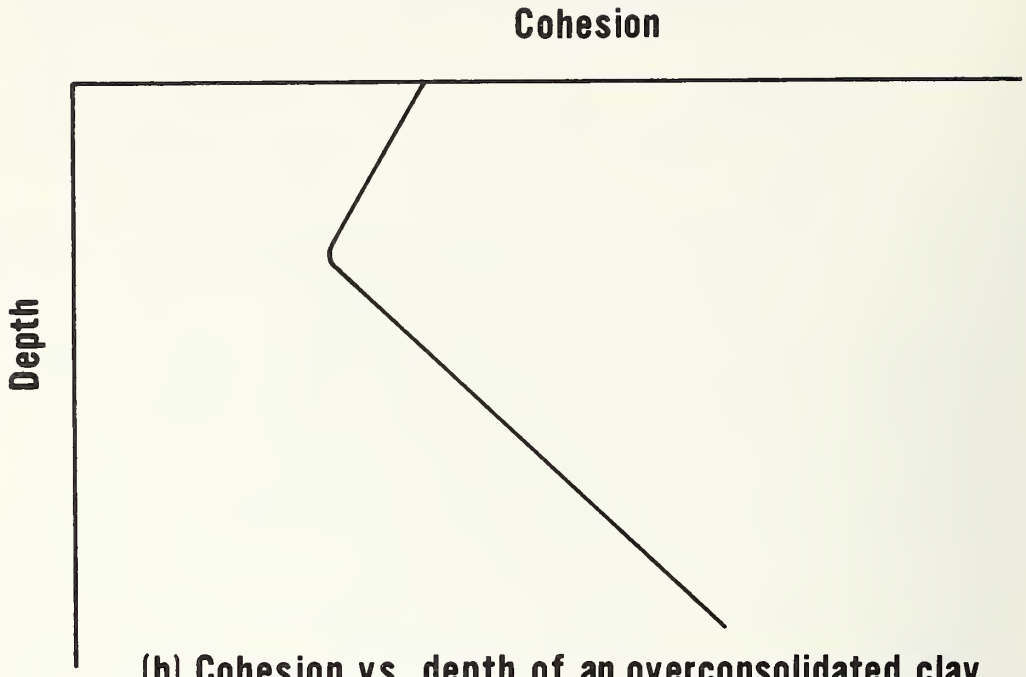


(b) Cohesion vs. depth of an overconsolidated clay

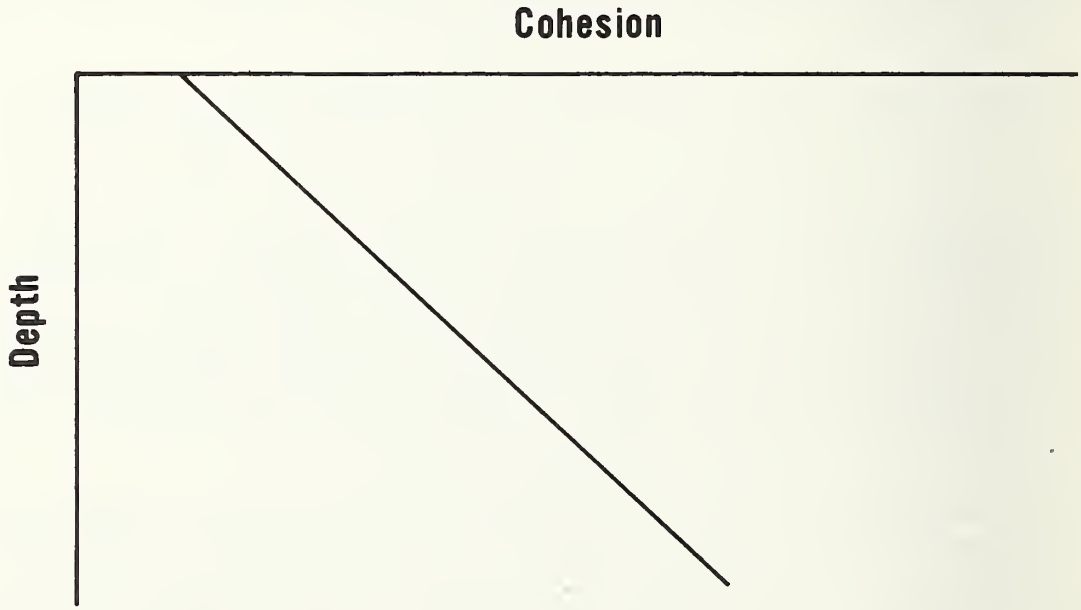


(a) Cohesion vs. depth of a normally consolidated clay

*Figure 4.1: Profiles of Cohesive Strength vs. Depth in Normally Consolated and Overconsolidated Clays*

### 4.2.3 Site and Working Conditions

(1) Water

The effect of a change in the water content on the strength of soils was discussed in previous sections of this report. If a trench fills with water, or if heavy rain and flooding occur, the water content of the surrounding soil will in most instances increase. As previously noted, such an increase in water content will weaken most soils. However in medium to fine poorly graded sands, an increase in moisture content may increase the shear strength due to tensile forces induced by capillary suction (apparent cohesion). This strength increase disappears if the moisture content is either decreased or increased from a certain optimum. One contractor interviewed [22] claimed to have deliberately flooded sandy areas so he could excavate with steeper sideslopes.

Most major problems associated with water are caused by occasional flooding by rain, water line breaks and snow or ice melts. While a trench is filled with water the stability of the sideslopes may actually increase in most instances since the soil is submerged and its weight decreases and excess pore pressures tend to equalize. Since flooding of trenches inhibits the construction work, contractors pump the water and drain the trench as rapidly as possible. As the pumping proceeds, seepage forces develop and a significant amount of finer particles drains from the trench walls into the trench and is pumped out with the water. This will cause an increase in the void ratio of the soil adjacent to the trench and thus reduce the shear strength [26]. However rapid pumping may have other more serious effects. As a result of the rapid drawdown the trench could be almost empty while the surrounding soil is fully saturated. This increases the unit weight of the soil and thus the driving forces which can cause a stability failure while at the same time the shear strength is reduced by saturation and excess pore water pressures. As a consequence the trench may collapse during or shortly after the pumping operation. The severity of these effects depends to a large degree on the drainage and strength characteristics of the surrounding soil. Not much data are available on this phenomenon [23].

Current OSHA regulations specify that trenches must be inspected after rains. This provision may not be adequate. If the soil adjacent to a trench has undergone radical changes in moisture content the stability of the trench may be in question. Additional shoring or flatter slopes should be considered if the construction is in a location or season where flooding or severe rain could be anticipated.

(2) Desiccation

Desiccation (drying) of the trench wall or bottom could cause difficult problems; however these problems are more significant in excavations that are open for long periods of time. As previously noted desiccation causes tension cracks and overconsolidation in the soil layers near the surface. Desiccation occurs as a result of exposure of soils on the

side and bottom of an excavation to air. When the moisture content of clays decreases the volume of the clays decreases. The shrinkage causes tensile stresses in intact clays which result in tensile cracks whenever the tensile strength is exceeded and in fissured clays it causes existing fissures to open up. Eventually the tensile strength can completely dissappear and the material acts like a granular soil. However, unlike sands, these desiccated clays may lose much of their shear strength when water penetrates the fissures. Typical desiccation effects which were observed in Houston [22] are shown in Figure 4.2. The failure wedge abc in Figure 4.2(a) is probably attributable to desiccation near the surface which existed prior to opening of the trench. The spalling of column a, a', b, c is attributable to desiccation on the side of the excavation after opening of the trench.

Drying of moist sands may have adverse effects in sloped excavation where the angle of slope depended on apparent cohesion.

(3) Previous Disturbances

Previous disturbances are most frequently observed at utility line crossings. There is evidence from field studies by NBS [7] that contractors are frequently unaware of the presence of previously disturbed areas and accidents result as a consequence. The most dangerous situations occur in excavations in cohesive (hard, compact) soils where skip bracing rather than tight sheeting is used. The decrease in cohesive strength is not always noticed during the excavation stage and subsequently the trench may collapse during or after insertion of the bracing. It should be noted that in most instances backfill in utility trenches is not compacted and thus previously disturbed material tends to be much weaker than the surrounding soil.

(4) Vibrations

Vibrations are caused by excavating equipment, driving of piles and sheet piles, traffic, and operations in the trench itself. In saturated sands or silts vibrations could cause substantial or complete loss of shear strength (liquefaction), causing the soil to act like a liquid and substantially increasing lateral pressures. Loss of shear strength could also occur in sensitive clays. In addition, the dynamic forces caused by vibrations could temporarily increase lateral pressures. The most dangerous potential consequence of vibrations on braced excavations is their possible effect on the bracing itself. Struts are wedged against the walls or uprights and exert lateral pressures against the trench wall. Frequently it is this lateral pressure which keeps the struts in place and no tie is provided. Vibrations can cause relative movement between bracing elements which may result in a reduction or release of these pressures causing the unloaded struts to separate and fall off. This loss of support can trigger a collapse. Another consequence of loss of, or reduction in, the preload of struts could be that the retained soil may become disturbed.

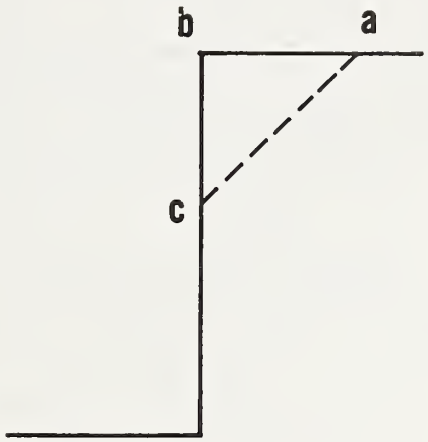


(a) Effect of initially desiccated zone

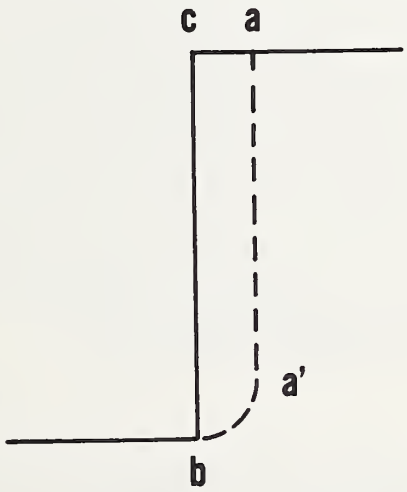


(b) Desiccated pillar mode of failure

*Figure 4.2: Desiccation Effects Observed in Cuts in Clays*

(5) Surcharge

Surcharge imposes additional lateral forces on trench bracing and increases the driving forces which could cause a stability failure of a sloped excavation. Surcharge loads are exerted by spoil piles, excavation equipment and stored building material, and sometimes by building foundations which are close to the trench. As a rule of thumb, any load which is located within the area where imaginary 45 degree sideslopes intersect the ground surface has an effect on the stability of the excavation. This rule of thumb, however, may not be conservative enough for very soft or loose soils. A sideslope ascending from the edge of a vertical braced excavation also acts like a surcharge.

Present OSHA regulations require that spoil piles be kept two feet from the edge of the excavation slope. While this provision alleviates surcharge effects it does not eliminate these effects and it is primarily intended to reduce the danger of spoil material spilling, or objects rolling into a braced excavation, or sloughing of the upper corner of sloped excavations. There should be similar provisions for excavating and construction equipment and machinery.

(5) Trench Discontinuities

Field studies conducted by NBS [7] indicate that many accidents occur at trench discontinuities, particularly at intersections between two trenches which occur whenever lateral pipes are connected to sewer trunklines. Discontinuities also occur at manhole locations or when a trench changes direction. One potential effect is shown in a simplified way in Figure 4.3. The shear strength of the soil required to resist a slide along planes outlined by the dotted lines in Figure 4.3(a) is less than that required to prevent the failure at the corner shown in 4.3(b). Note that frequently at trench intersections only the main trench is braced while the lateral trench is still unbraced, particularly since installation of trunklines and lateral lines is often done by different contractors and at different times. If this situation arises, the thrust exerted by preloaded struts can cause a failure of the corner at the trench intersection. There are presently no OSHA provision to prevent this dangerous situation.

(6) Time

Effects of time were discussed in Section 4.1. Time effects include: desiccation of clays; loss of shear strength in overconsolidated clays after lateral expansion; loss of apparent cohesion in sands; weakening of bedding planes of rock by seepage; and erosion. Some failures in a soil mass do not occur suddenly but rather manifest themselves by slow movements over considerable periods of time. This includes stability failures in cohesive soils. In many instances the time element required for a failure to develop is much longer than the time typical utility trenches are left open (two hours or less).

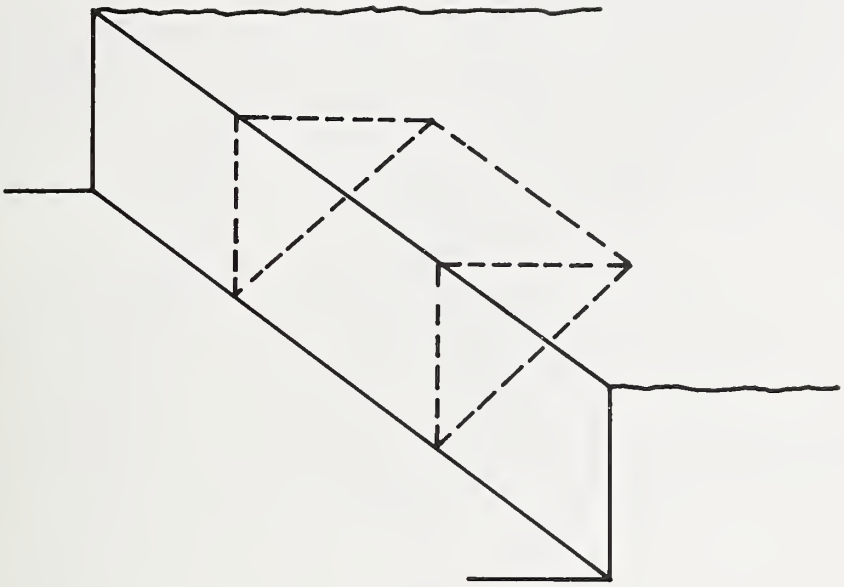

**(a) Potential failure section of straight trench**

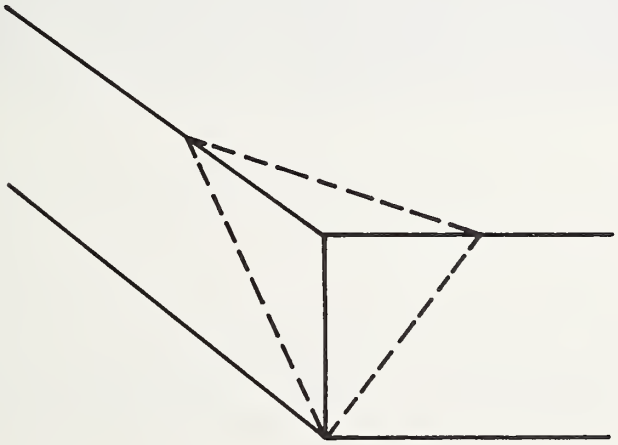

**(b) Potential failure section at corner**

*Figure 4.3: Effect of Trench Intersection on Sideslope Stability*

There is also a complex relationship between drainage conditions and time. The "undrained" condition is usually more critical since the effective shear strength is less under undrained conditions when effective normal stresses are reduced by excess pore water pressure. In utility trenches the undrained condition usually governs. In larger excavations both drained and undrained conditions may have to be considered, except when the excavation proceeds at a slow enough pace to permit drainage while the work is in progress. In cohesive soils it is customary to rely only on the part of the shear strength attributable to cohesion when undrained conditions are anticipated. Cohesion, in turn, can be determined in an unconfined compression test.

Time effects can be critical in overconsolidated clays. The following observation illustrates one instance where reduced confining pressures caused a failure [22]. A vertical 8-ft (2.4-m) deep trench was opened in a fissured clay in Houston, Texas to observe its behavior. Initially the soil appeared stable with no visual indication of fissures. Skeleton braces were installed 8 ft (2.4 m) on center. After 45 minutes several sections between the uprights suddenly collapsed. This is a typical situation which can lead to fatal accidents, since there is sufficient time for workers to enter the trench, but instability occurs before the work is completed.

Unfortunately time effects on trench stability are difficult to quantify and no recorded data are available. To the extent that accident reports are available they seldom describe the events adequately or contain an accurate chronology of events. However there are indications that trenches left open for a few hours behave differently from those open for a few minutes, and that long term excavations generally require stronger bracing or flatter sideslopes than short term utility trenches.

Facing page: *Compound slope used in large irrigation project*

# 5. RECOMMENDED SOIL CLASSIFICATION SYSTEMS

## 5.1 GENERAL

### 5.1.1 Purpose

Any recommended soil classification system must be designed to serve the purpose of its intended use. Thus, it is important to determine who will use it and how it is to be used.

Engineers generally follow the practice outlined in Chapter 3, which relies on the determination of in situ soil properties. Additionally, engineers consider many other parameters such as ground and surface water, drainage characteristics, tension cracks, and static and dynamic surcharge loads. Since each location has its own problems, and engineers are trained and qualified to deal with these problems in accordance with

the state of the art, a formal soil classification system to supplement engineering practice in excavations would not necessarily serve a useful purpose and could even be harmful by narrowing the range of options available to engineers. Thus, the recommended systems are not intended to supplement present engineering practice.

A different situation arises when pre-fabricated systems and devices such as trench boxes or hydraulic shores are used. In this instance it is necessary to determine in advance under which field conditions the systems can be used. This is best accomplished by a classification system which categorizes anticipated field conditions and gives adequate consideration to the critical parameters. The role of the engineer would then be to determine whether the shoring system is adequate for its intended use.

In shallow utility trenches where work proceeds at a fast pace and soil conditions tend to change rapidly it is generally not realistic for an engineer to design shoring systems or determine slope stability while the work is in progress. For this case a classification system is needed which allows the rapid identification of field conditions by both construction supervisory personnel and OSHA inspectors.

Thus, the classification systems recommended herein are intended to serve two purposes:

1. to predetermine conditions for the use of pre-fabricated or pre-designed shoring systems

2. to allow rapid determination of shoring and sloping requirements for various field conditions by construction supervisors and OSHA inspectors.

5.1.2 Criteria

On the basis of the discussion in Sections 3 and 4 and the results of the field studies discussed in this report, the following principles were derived for creating a soil classification system:

1. The system must be comprehensive (not exclude any condition that could be encountered, except for extreme or unusual cases which require supervision by an engineer).

2. All the critical parameters must be considered, either implicitly or explicitly.

3. Ambiguity must be avoided (any two persons classifying a site should arrive at the same conclusion) and in case of a dispute it should be possible to make objective determinations.

4. The system must be simple enough to be useable by construction supervisory personnel and by OSHA inspectors.

Note that Criterion (3) is difficult to meet. Soil is a natural material and no two locations are exactly alike. Thus, a precise definition that does not require subjective judgment can only be based on the most obvious and easy to recognize soil properties. Such an approach is by necessity conservative, since it must satisfy the worst condition out of the range of possible conditions within a given soil class.

Criterion (4) also poses problems since supervisory personnel and inspectors are neither trained in geotechnical engineering, nor do they have the means to perform any but the most primitive tests. More accurate laboratory tests will in most instances only be used to resolve disputes.

### 5.1.3 Existing Classification Systems for Trenching

Some of the present soil classification systems devised for trenching are shown in Table 3.1. An attempt is made in the table to correlate the soil descriptions by their position on a vertical scale which goes from "strong" (rock) to "weak" (soft clay). Note that OSHA as well as CAL OSHA have dual systems (Table P-1 vs. Table P-2, Section 1541 vs. Appendix C) which cannot be easily correlated with each other. In accordance with the NBS field study [7] the systems in CAL OSHA Appendix C and Wisconsin OSHA are both successfully used and generally acceptable to their users.

It is useful to examine the compliance of the systems in Table 3.1 with the criteria in 5.1.2:

> OSHA Table P-1 does not meet Criterion (1) except if everything that is not defined is considered an "average soil" (this would include everything from hard to soft clay). It does not meet Criterion (2) very well, though it may be argued that many parameters are considered implicitly. It does not meet Criterion (3) since even a qualified soils laboratory could not determine when a sand is "sharp and compacted" and a gravel is "angular". For the same reason the system can also not be considered simple.
>
> OSHA Table P-2 meets Criterion (1) since any conditions could be placed into one of the categories (this pre-supposes that the comma in one instance stands for "and", in the other for "or"); it meets Criterion (2) implicitly, even though hydrostatic pressure inadequately describes potential water effects; it does not adequately meet Criterion (3), even though it could meet the criterion if certain definitions were added for "hard", "likely to crack," and "soft", and it reasonably meets Criterion (4).
>
> CAL OSHA, Section 1541 could meet Criterion (1) with additional definitions, it implicitly meets Criterion (2); it would need some added definitions to meet Criterion (3); and it meets Criterion (4).

CAL OSHA, Appendix C meets Criteria (1), (3), and (4) but does not completely meet Criterion (2) since it does not consider surcharge effects.

Wisconsin OSHA does not meet Criterion (1) since it would be difficult to know where to fit soft clay; it probably meets Criterion (2) implicitly; it would need added definitions to meet Criterion (3); and it meets Criterion (4).

Two questions arise in conjunction with these existing systems:

1. Is compliance with all four criteria proof that a system is sound? The answer to this question is that compliance with the criteria is a necessary (or at least highly desirable) but not a sufficient condition. In additon to compliance with the criteria, a system should lead to technically sound and safe decisions (though this could be the case if Criterion 2 is adequately satisfied) and should provide enough options to the contractor. Thus, even if soil categories are clearly defined, the choice of these categories and the lateral forces or slopes assigned to them may not be sound. This could lead to a situation where it would be easy for a contractor to determine a soil type and there would not be many disputes between inspectors and contractors, but the accident rate would be high because of inadequate shoring, or shoring cost would be exorbitant because of excessive safety margins.

2. If a system does not fully meet all four criteria, can it still be used? Experience indicates that the answer to this question is yes. The two cases in point are the CAL OSHA, Appendix C system and the Wisconsin system.

   The CAL OSHA, Appendix C system is slightly deficient by not considering surcharge. It also assigns rather small lateral forces to soils which are not wet sands, saturated, or soft clays. One reason for the success of the system may be that its use is confined to a limited geographical area. If the system were to be adopted nationwide, extensive use of very small lateral pressures may have adverse consequences. Similarly, if the Wisconsin sytem were used nationwide, it may lead to difficulties in soft clay areas.

## 5.2 RECOMMENDED SYSTEMS

### 5.2.1 General

Before a classification system is adopted, a decision must be made about its degree of sophistication. The adoption of a system which is very simple and uses few easily recognizable soil categories is likely to reduce judgment errors by construction personnel, simplify enforcement and prevent costly litigation. On the other hand, it is likely to decrease the number of the contractor's options and thereby in some instances increase construction costs. A more sophisticated system

would require better training of construction personnel and inspectors and may increase the chances for errors, but if skillfully used it could result in more economical and in some instances safer construction. Accordingly, two alternate systems are recommended. A "simplified" classification system, and a more sophisticated "matrix" classification system. Before a decision is made which of the two systems should be adopted, the advantages of each system must be weighed against its disadvantages. It is not recommended that both systems be adopted.

### 5.2.2 Definition of Lateral Pressures and Allowable Sideslopes Associated with the Classification Systems

The choice of a soil class or category determines allowable sideslopes in sloped excavations and lateral pressures that shoring must be designed to resist. These are explained hereafter.

Figure 5.1 shows allowable sideslopes. The steepest allowable sideslope is specified as the ratio of horizontal over vertical (h/v) for each soil category. Cases I, II and III in the figure show sloped-excavation configurations that should be permitted to provide some flexibility to contractors.

Figure 5.2 shows the lateral pressure diagram assumed to act on the excavation bracing. The bracing should be designed to resist these lateral pressures with suitable safety margins.[3] The equivalent uniform pressure $w_e$ is specified for each soil category. Note that unlike some of the pressure diagrams used in present engineering practice (figure 3.1) a simple rectangular pressure diagram is used for all soil types. A more complex diagram would not be justified because of the approximate nature of this approach. An additional 2 ft (0.6 m) are added to the depth [H] for the purpose of calculating pressure in order to allow for surcharge loads. It is recommended to use 100 percent of the calculated load for the design of struts (cross braces), 80 percent for the design of wales, and 67 percent for the design of sheeting.

### 5.2.3 Simplified Classification System

This recommended system is similar to the one used in CAL OSHA Appendix C; however, it differs in one important aspect: the category

---

[3]Specification of safety margins is not within the scope of this report, but as a general philosophy it is envisioned that allowable working stresses permitted in present engineering practice should not be exceeded in long-term excavations and could be exceeded by up to 33 percent in excavations open for less than 24 hours.

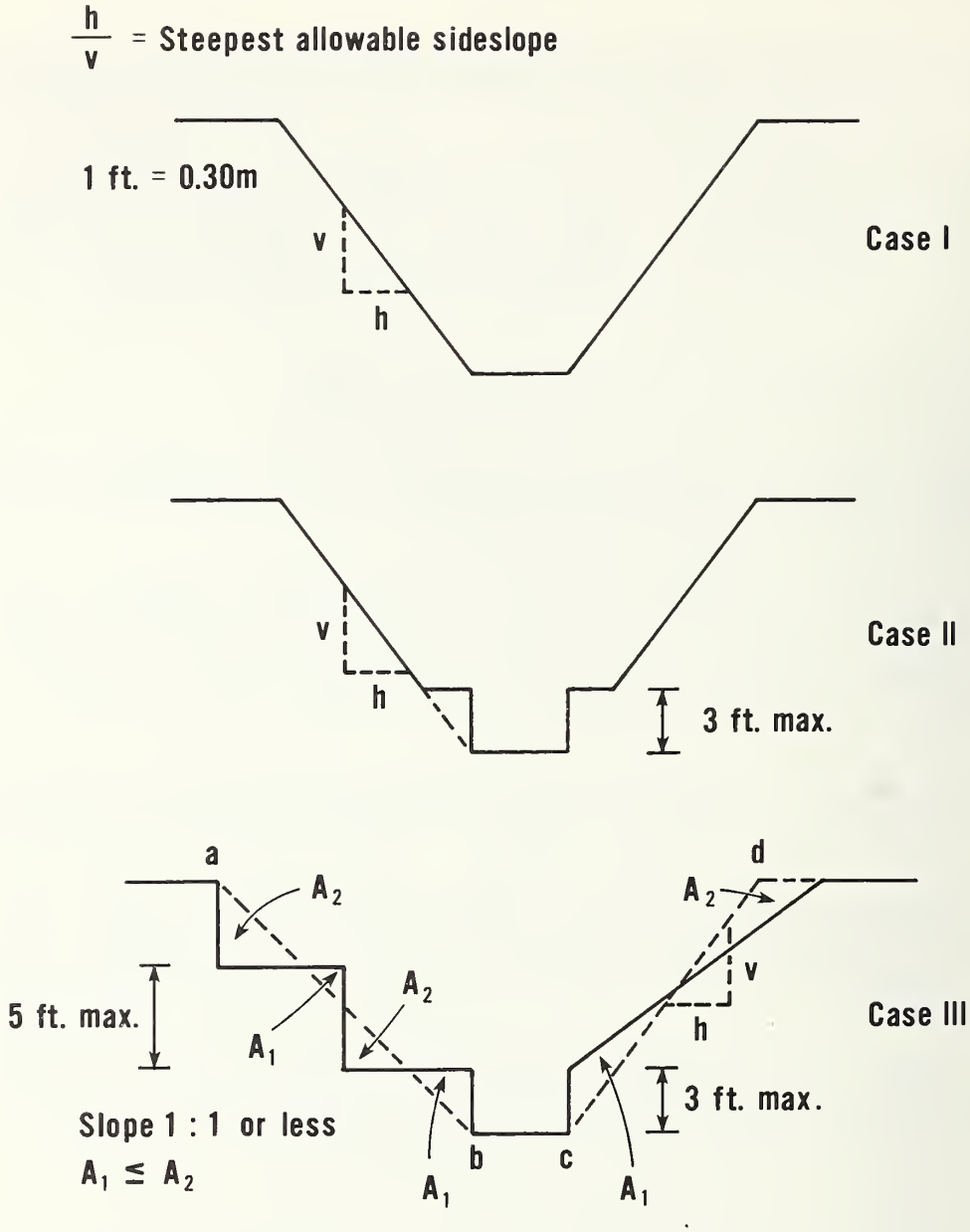


Case I - Ordinary slope

Case II - Compound slope with bench no more than 3 ft. high

Case III - Configuration must meet following criteria:

1. No vertical bank to exceed 5 ft., the bank adjacent to the work area not to exceed 3 ft.
2. Imaginary slopes ab and cd not to exceed max. allowable. If steps are used (left side of III) imaginary slope (ab) not to exceed 1 : 1
3. Excavated area equal to or greater than area within abcda

*Figure 5.1: Recommended Allowable Configurations of Sloped Excavations*

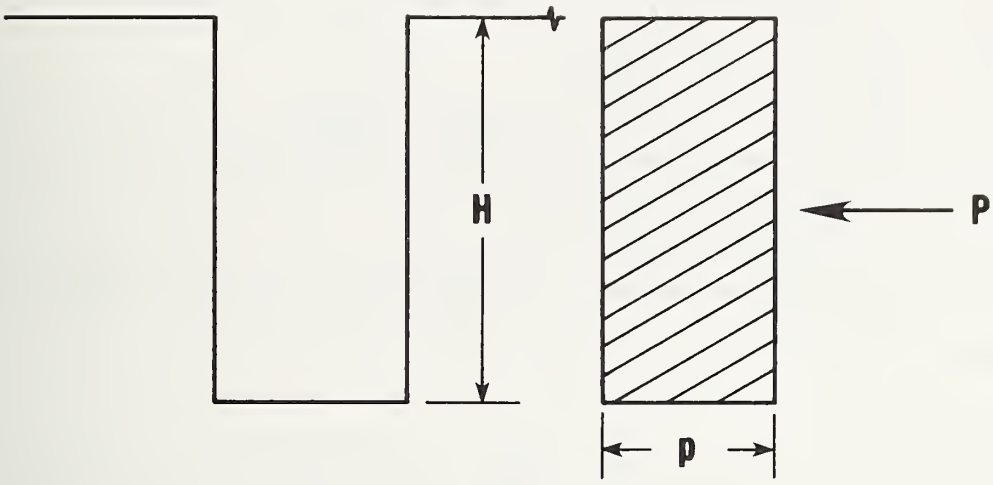


$p = w_e (H+2)$

$P = p \times H$

H = Height of supported bank, ft.
(2 ft. are added to allow for surcharge)

p = Distributed horizontal earth pressure, $lb/ft^2$

P = Resultant horizontal force per unit length lb/ft.

$w_e$ = Lateral weight effect, $lb/ft^3$

Note: 1m = 0.30 ft., 1 lb = 4.5 N, 1 $lb/ft^2$ = 48 Pa,
1 $lb/ft^3$ = 157 $N/m^3$

*Figure 5.2: Assumed Diagram of Lateral Soil Pressure Acting on Shoring*

for the strongest soils (A) is more restrictive. This slightly more conservative approach was taken because even though there is evidence that lateral pressures in shallow trenches are less than those predicted by present engineering practice,[4] the evidence has not been corroborated by adequate data on actual strut loads in shallow trenches. Even though this system is more conservative than CAL OSHA Appendix C, the lateral pressures for Type A soils are still significantly lower than those used in present engineering practice.

The simplified system is shown in Tables 5.1 and 5.2

### 5.2.4 Matrix Classification System

The matrix classification system was originally proposed in Reference [22]. A modified version is presented below. It is a more sophisticated approach that permits explicit consideration of several parameters which are implicit in the simplified system.

The matrix classification system is summarized in Tables 5.3, 5.4 and 5.5.

## 5.3 FIELD IDENTIFICATION

### 5.3.1 General

It has been noted in section 5.1.2 that a field identification method for soil should be free of ambiguity so that any two persons classifying a site will always arrive at the same conclusion and yet simple enough to be useable by construction supervisory personnel. This is an ideal that may never be fully achieved. Thus, the field identification methods proposed herein are not entirely free of possible ambiguities. The authors believe that the system can only be gradually perfected as a result of experience gained by its application.

The following field identification methods are recommended because they are considered suitable for rapid field decisions by construction personnel. Although relatively crude, they will permit identification of soil categories and thereby provide the necessary information for bracing and sloping decisions. The tests are not intended for engineering design. Should an engineering analysis be desired, it is recommended that presently accepted methods of soil sampling and testing be used.

Three identification tests are proposed to permit rapid soil identification as the work progresses. A visual-manual examination, which in most instances will provide adequate information; strength tests to provide improved quantitative estimates of the unconfined compressive strength of cohesive soils in case of doubt; and drying tests to identify fissured

---

[4]NBS study of widely used conventional timber shoring indicated that it could not resist the pressures calculated by present engineering practice. [Reference 25, App. A]

Table 5.1 Simplified Soil Classification System

| Soil Type | Description | $w_e$ lb/ft$^3$ a/ | Steepest Slope Hor. : vert. |
|---|---|---|---|
| A | Intact Hard | 20 | 3/4 : 1 b/ |
| B | Medium | 40 | 3/4 : 1 b/ |
| C | Submerged or Soft | 80 | 1 1/2 : 1 b/ |

Notes:

1. Intact Hard Soils (Type A) include stiff clays and cohesive or cemented sands and gravels c/ (hardpan, till) above the ground water table which have no fissures, weak layers, or inclined layers that dip into the trench. Stiff clays included have an unconfined compressive strength (pocket penetrometer reading) $q_u$ = 1.5 tsf d/ or more. Intact hard soils subject to vibrations by heavy traffic, pile driving or similar effects are Type B.

2. Medium Soils (Type B) are all soils which are not Type A or C.

3. Soft Soils (Type C) include cohesive soils c/ with an unconfined compressive strength (pocket penetrometer reading) of 0.5 tsf d/ or less and soils that can not stand on a slope of 3 hor. in 1 vert. without slumping (muck).

4. Submerged Soils (Type C) are assumed whenever water drains into the trench from the soil forming the bank, or water is retained by tight sheeting, or there is a possibility that the trench may be fully or partially flooded before workers leave it or may be entered by workers, within 6 hours after more than half, of its depth was flooded and pumped out.

5. Fractured Rock shall be considered Type B when it is dry and Type C when it is submerged. Intact (unfissured) and unfractured rock is exempt from shoring and sloping requirements.

6. Layered Systems (two or more distinctly different soil or rock types, micaceous seams in rock) which dip toward the trench wall with a slope of 4 hor.: 1 vert. or steeper are considered Type C. Layered soils are classified in accordance with the weakest layer.

7. Spaced Shoring Systems (Skeleton) sheathing or skip shoring) are permitted in Type A and B cohesive soils c/ with maximum center to center spacing in accordance with Table 5.2.

---

a/ 1 lb/ft$^3$ = 1.63 N/m$^3$

b/ If there is any indication of general or local instability slopes shall be cut back to a slope which is at least 1/4 hor.: 1 vert. flatter than the stable slope.

c/ Cohesive soils are clays (fine grained) or soils with a high clay content which have cohesive strength. They do not crumble, can be excavated with vertical sideslopes, are plastic (can be molded into various shapes and rolled into threads) when moist and are hard to break up when dry.

d/ 1 tsf = 96 kPa

Table 5.2 Maximum Center to Center Spacing (in feet) of Spaced Sheeting for Simplified Soil Classification System

| Soil Type | Depth, ft[a/] 5-10 | 10-15 |
|---|---|---|
| A | 8 (6)[b/] | 6 (4)[b/] |
| B | 3 | 2 |

a/ 1 ft. = 0.3 m.

b/ Numbers in parentheses are preferred spacings.

Table 5.3 Soil Classes in Matrix Classification System

| Site Condition / Soil | Water in Trench: No — Fissures: No | Water in Trench: No — Fissures: Yes | Water in Trench: Yes — Fissures: No | Water in Trench: Yes — Fissures: Yes |
|---|---|---|---|---|
| Stiff Cohesive[a/] | I | II | III | |
| Medium Cohesive[a/] | II | III | III | IV |
| Granular[b/] | II | | III | |
| Soft | IV | | IV | |

Notes:

1. Water in Trench is assumed whenever water drains into the trench from the soil forming the bank, or water is retained by tight sheeting, or there is a possibility that the trench may become fully or partially flooded before workers leave it, or may be entered by workers within 6 hours after more than half its depth was flooded and pumped out.

2. Vibrations: Soils subject to vibrations by heavy traffic, pile driving or similar effects shall always be assumed fissured.

3. Stiff Cohesive Soils[a/] include stiff clays and cohesive or cemented sands and gravels (till, hardpan). Stiff clays included have an unconfined compressive strength (pocket penetrometer reading) $q_u$ = 1.5 tsf[c/] or larger.

4. Medium Cohesive Soils[a/] have an unconfined compressive strength (pocket penetrometer reading) between 0.5 and 1.5 tsf[c/].

5. Granular Soils[b/] are gravels, sands and silts that can stand on a slope steeper than 3 hor.: 1 vert. without spalling or slumping.

6. Fractured Rock shall be treated as granular soil. Intact rock is exempt from shoring and sloping requirements.

7. Soft Soils are cohesive soils [a/] with an unconfined compressive strength (pocket penetrometer reading) of 0.5 tsf[c/] or less and granular soils that can not stand on a slope of 3 hor.: 1 vert. without slumping (muck).

8. Layered Systems (two or more distinctly different soil or rock types, micaceous seams in rock) which dip toward the trench wall with a slope of 4 hor.: 1 vert. or steeper are considered Class IV soils.

9. Distrubed Cohesive Soils (backfill) shall be treated as fissured medium cohesive or soft cohesive soil.

10. Spaced Shoring Systems (skeleton sheathing or skip shoring) are permitted in stiff and medium cohesive soil with maximum center to center spacing in accordance with Table 5.5.

---

a/ Cohesive Soils are clays (fine grained) or soils with a high clay content which have cohesive strength. They do not crumble, can be excavated with vertical sideslopes, are plastic (can be molded into various shapes and rolled into threads) when moist and are hard to break up when dry.

b/ Granular Soils have no cohesive strength. They normally can not be excavated with vertical sideslopes (some moist granular soils will exhibit apparent cohesion and temporarily stand on a vertical slope), they can not be molded when moist and curmble easily when dry.

c/ 1 tsf = 96 kPa

Table 5.4 Minimum Acceptable Stability Requirements for Matrix Soil Classfication System

| Soil Type | $w_e$ lbf/ft$^3$ [a/] | Steepest Slope hor:vert. |
|---|---|---|
| I | 20 | 1/2:1 |
| II | 40 | 3/4:1 |
| III | 60 | 1:1 |
| IV | 80 | 1 1/2:1 |

Notes:

1. If there is any indication of general or local instability, slopes shall be cut back to a slope which is at least 1/4 hor.: 1 vert. flatter than the stable slope.

2. In layered soils stability requirements are set by the weakest layer.

---

a/ 1 lbf/ft$^3$ = 1.63 N/m$^3$

Table 5.5 Maximum Center to Center Spacing in ft. of Spaced Sheeting for Matrix Soil Classfication System

| Soil Class | Depth in ft.[a/] 5-10 | 10-15 |
|---|---|---|
| I | 8 (6)[b/] | 6 (4)[b/] |
| II | 3 | 2 |
| III | 3 | 2 |

a/ 1 ft = 0.3 m

b/ Numbers in parentheses are preferred spacing.

soils that can be readily identified visually and to differentiate between cohesive and granular material in case of doubt.

### 5.3.2 Visual-Manual Examination

#### (1) General

The recommended soil classification systems are designed for rapid field application. Normally all that is needed is a visual and manual examination of the soil and site condition as work progresses. In case of doubt or dispute the other field tests recommended herein, or more accurate laboratory or in situ tests can be used. While the methods and interpretations given herein provide guidance, they can not be substituted for common sense and judgment which may dictate attention to events and phenomena which are not discussed herein.

#### (2) Visual Examination

Visual examination includes examination of the site before excavation, examination of the trench and the extracted material during excavation and examination of the soil surface next to the excavated trench.

Examination of the soil surface before excavation should be for cracks (fissures), previous disturbance, surface water and vegetation (if there are known correlations between vegetation and subsurface conditions). If there are cracks (usually tension cracks from drying of clays) the soil should be considered fissured, unless the fissures are very shallow (25 percent of the excavation depth or less). Also, if previous disturbance is detected (adjacent or crossing utility lines should be considered evidence of previous disturbance) the soil should be considered fissured. Surface water may be an indication that the soil is saturated, but this is not necessarily true for impervious soils (clays), where surface water may be perched.

Examination of the soil during excavation should include several observations.

1. Can the soil stand with vertical walls? If yes, can it stand longer than 10 minutes? If not, at what slope will it stand without further slumping or spalling? If the soil can stand longer than 10 minutes it may be a hard intact (Type A) soil, or, by the matrix system, a Class I soil. A Type A (Class I soil) should stand vertically without collapse or spalling for at least 2 hours. A soil that cannot stand vertically for at least 10 minutes should not be shored by spaced sheeting. A soil that can not stand on a slope steeper than 3 hor.: 1 vert. is a "soft soil" (Type C or Class IV).

2. Is the soil dry, moist or wet? A wet soil should be considered "submerged" (water in trench) unless the ground water is lowered by dewatering of the soil forming the bank. A "moist" soil should not be considered "submerged" unless water drains from the banks into the trench.

3. Is the soil fissured or disturbed? If not, do fissures develop a short time after excavation? If fissures either are present, or develop a short time after excavation the soil is fissured (Type B in simplified system).

4. Does the soil crumble or come out in clumps? If it comes out in clumps, can the clumps be broken up? If the clumps are moist or wet do they tend to slump under their own weight?

   Soils that come out in clumps are probably cohesive (a more reliable determination is discussed under manual examination). If moist or wet clumps tend to slump when dumped out of the bucket of the backhoe the soil is probably a "soft soil" (Type C or Class IV).

5. Do chunks of soil spall off the vertically excavated trench wall? If yes, this is an indication that the soil is fissured (Type B).

6. Is the soil layered? If yes, do the layers dip into the trench? This is a determination which is normally made entirely on the basis of the visual examination, by looking at the two sides of the trench.

Additionally, visual examination during excavation will reveal changed conditions such as color or moisture changes or changes in the previously discussed conditions 1. to 5.

Examination of the soil surface next to the excavated trench should be mainly for fissures parallel to the direction of the trench. If new fissures appear before shoring is installed it is usually an indication that the soil is fissured even if it was previously assumed that the soil is intact. This situation frequently arises in overconsolidated clays. In soft cohesive soils fissures next to an unshored vertical trench are an indication that the cohesive strength of the soil can not support the vertical cut. In either case shoring of appropriate strength should be selected and great caution should be exercised during its installation.

If new fissures appear next to a shored trench, the fissures should be taken as an indication of inadequate shoring and possibly imminent collapse. Likewise, development of new fissures next to a sloped trench are an indication that the sideslope is too steep and a slide may be imminent.

(3) Manual Examination

Several tests are included in the manual examination:

1. Dry Strength

If the soil is dry and crumbles on its own or with moderate pressure into individual grains or fine powder it is granular (sand or silt). If the soil is dry and falls into clumps which break up into smaller clumps, but the smaller clumps can only be broken up with difficulty it is a fissured clay.

If the dry soil breaks into clumps which do not break up into smaller clumps and which can only be broken with difficulty it may be an intact clay, provided the visual examination of the trench and its vicinity did not give any indicaton of fissures.

2. Plasticity

Moist or wet cohesive soils can be molded into various shapes and rolled into threads as thin as 1/8 in. (3 mm) without crumbling. If at least a 2 in (50 mm) length of an 1/8 in thread can be held on one end without tearing the soil is cohesive (though it may be fissured).

3. Thumb Penetration

The thumb penetration test (see Table 3.3) can determine the strength of cohesive soils. Type A (Class I) soils can be indented by the thumb, but can only be penetrated with very great difficulty. Type C (Class IV) soils can be easily penetrated several inches by the thumb.

(4) Visual-Manual Examination by ASTM D2488-69 [1]

Some of the methods described in this section are compatible with ASTM D2488, however the approach is simplified and lends itself to a more rapid application. In case of doubt or dispute ASTM 2488 could be used with the following interpretation:

Cohesive soils are clayey silt, sandy clay; silty clay, clay, and organic clay that have dilatancies ranging from rapid-slow to none and "toughness of plastic thread" ranging from medium stiff to very stiff.

Consistency: Soft cohesive soils are defined as in ASTM, Table 1. Hard Intact Soils (stiff cohesive in matrix classification) cover the upper range of "very stiff" and "hard" as defined in ASTM Table 1 (1.5 ton/ft$^2$ and up).

(5) Visual Identification of Distress

"Distress" is defined herein as a situation where a shored or sloped trench is at the verge of total or partial collapse. Not only construction superintendents, but all workers entering or working next to a trench should be trained and instructed to identify and watch for signs of distress. There are two phenomena which are often associated with distress:

1. Development of new fissures parallel to a shored or sloped trench.

2. Sudden separation of even minor amounts of soil from the slope, or the vertical bank in spaced sheeting (pebbles or little clumps rolling off the bank or sands beginning to trickle down). The term "ravelling" is often used to describe this phenomenon.

### 5.3.3 Strength Tests

A crude approximation of the unconfined compressive strength of cohesive soils can be obtained by use of a pocket penetrometer. The pocket penetrometer should be utilized in place, preferably in the sides of a freshly-opened trench (workers performing the test must be protected by shoring). Tests should be made at locations no further apart than 10 ft (3m) horizontally along the trench or wherever the soil type changes. At each location, several tests should be made on each side of the trench preferably at 1/3 and 2/3 the depth and near the bottom if moisture content increases with depth. If it is dangerous to enter the trench, tests could be performed on soil clumps removed from the trench.

As an alternative to the pocket penetrometer, a hand operated shearvane may be used. In this case, readings should be doubled to obtain unconfined compressive strength. There may be a tendency to consider the results of shearvane tests as more reliable than is justified.

### 5.3.4 Drying Tests

The basic purpose of the drying test is to differentiate between granular materials, cohesive materials with fissures, and intact cohesive materials. The test must be conducted on undisturbed samples, perhaps taken with an ordinary shovel, since they will identify fractures, fissures and slickensides in cohesive soils as well as the coarse-grained component of other materials.

The procedure for the drying test involves drying a sample of soil approximately 1/2 to 1 inch (12 to 25 mm) thick and 6-inches (150 mm) in diameter. The sample can be dried in an oven at 212°F (100°C) for 24 hours. Other field methods could be used, such as placing the sample on a hot engine exhaust manifold or baking the sample in the sun during hot weather. If significant fissures exist, they will become apparent upon drying as the sample will crack along the fissures. If the sample dries to a hardened state intact it should be broken by hand as described in the following paragraph.

After drying, the sample is grasped between the thumb and forefinger of each hand and broken in flexure. If considerable force is necessary to break the sample, the soil has a significant clay content and should be classified as a soft, medium, or stiff clay without significant fissures or joints (intact). If the sample can be easily broken, the soil is either a fissured clay or a granular material. Distinction between a fissured clay or a granular material can be made by attempting to pulverize the resulting dried clumps of material. A simple means would be to squeeze them together in one hand. (Even stepping on them is all right.) If they pulverize into very small fragments, the material is granular. If the clumps do not pulverize easily, the material is a fissured clay.

### 5.3.5 Suitability for Spaced Sheeting

When the material is granular, spaced sheeting is not feasible since the material would collapse. This is in most instances evident and no tests are needed. A dangerous situation may however arise when the material stands up long enough to make installation of supports feasible but subsequently collapses between supports. This situation may arise in fissured clays as well as in moist soils which are predominantly granular. In the latter case, failure may occur with a change in moisture content. The following conditions are necessary, but not always sufficient for the feasibility and safety of spaced sheeting.

1. The trench, when fully excavated, should stand up with vertical walls for at least 10 minutes if spaced sheeting is to be used at all. It should be able to stand 2 hours without any sign of failure if the center to center spacing allowed for Type A (Class I) soils is to be used.

2. For spaced sheeting to be permitted at all it should be possible to pick up the dried drying test specimen on one end without breakage.

## 5.4 CLASSIFICATION PROCEDURES

### 5.4.1 Simplified Classification System

The classification procedure is outlined in the following flowchart. Note that in most instances all the steps can be accomplished in the visual-manual examination.

Additional decisions are needed when spaced sheeting is used according to Table 5.2. Two decisions are necessary:

1. Can spaced sheeting be used? If the soil crumbles and a portion of the trench will not stand for 10 minutes without support, spaced sheeting cannot be used. If the trench does stand up but there is a question whether adequate cohesive strength is available, an additional determination can be made by the drying test.

2. Is the soil Type A or B? This decision was previously described and can be in most instances easily resolved by thumb penetration or penetrometer tests. Trenches in Type A soil should also be capable of standing without support for two hours.

FLOW CHART FOR SOIL CLASSIFICATION PROCEDURE, SIMPLIFIED CLASSIFICATION SYSTEM

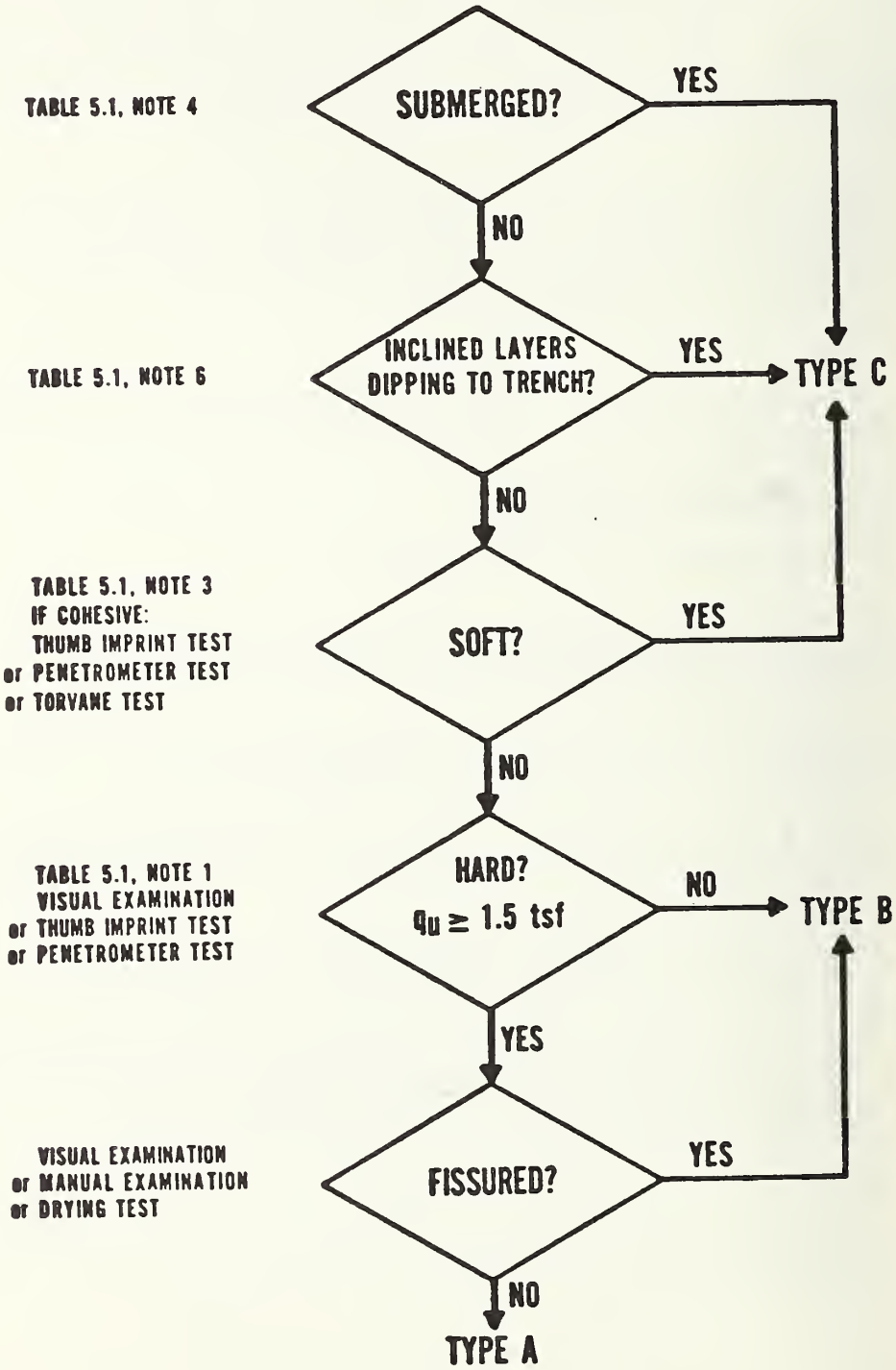

5.4.2 Matrix Classification System

In this system, more parameters are considered and thus, more decisions must be made. The procedure is outlined in the following flow chart.

FLOW CHART FOR SOIL CLASSIFICATION PROCEDURE,
MATRIX CLASSIFICATION SYSTEM

(1) Table 5.3, Note 8
(2) Table 5.3, Note 3
Visual Examination
Thumb Penetration
Penetrometer or vane
(3) Table 5.3, Note 5
Visual Inspection
Drying Test
(4) Table 5.3, Note 1
(5) Table 5.5, Note 4
Thumb Penetration
Pocket Penetrometer or vane
(6) Visual Examination
Manual Examination
Drying Test

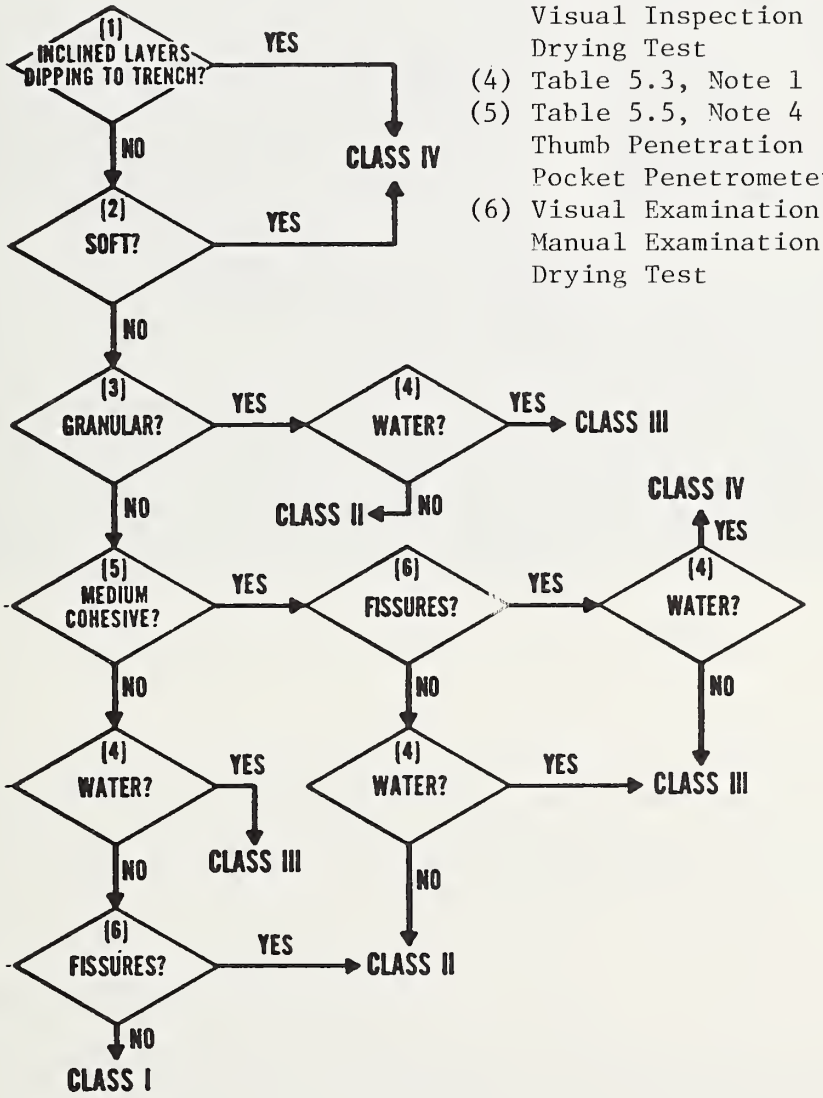

Facing page: *Prefabricated strut-wale assembly.*

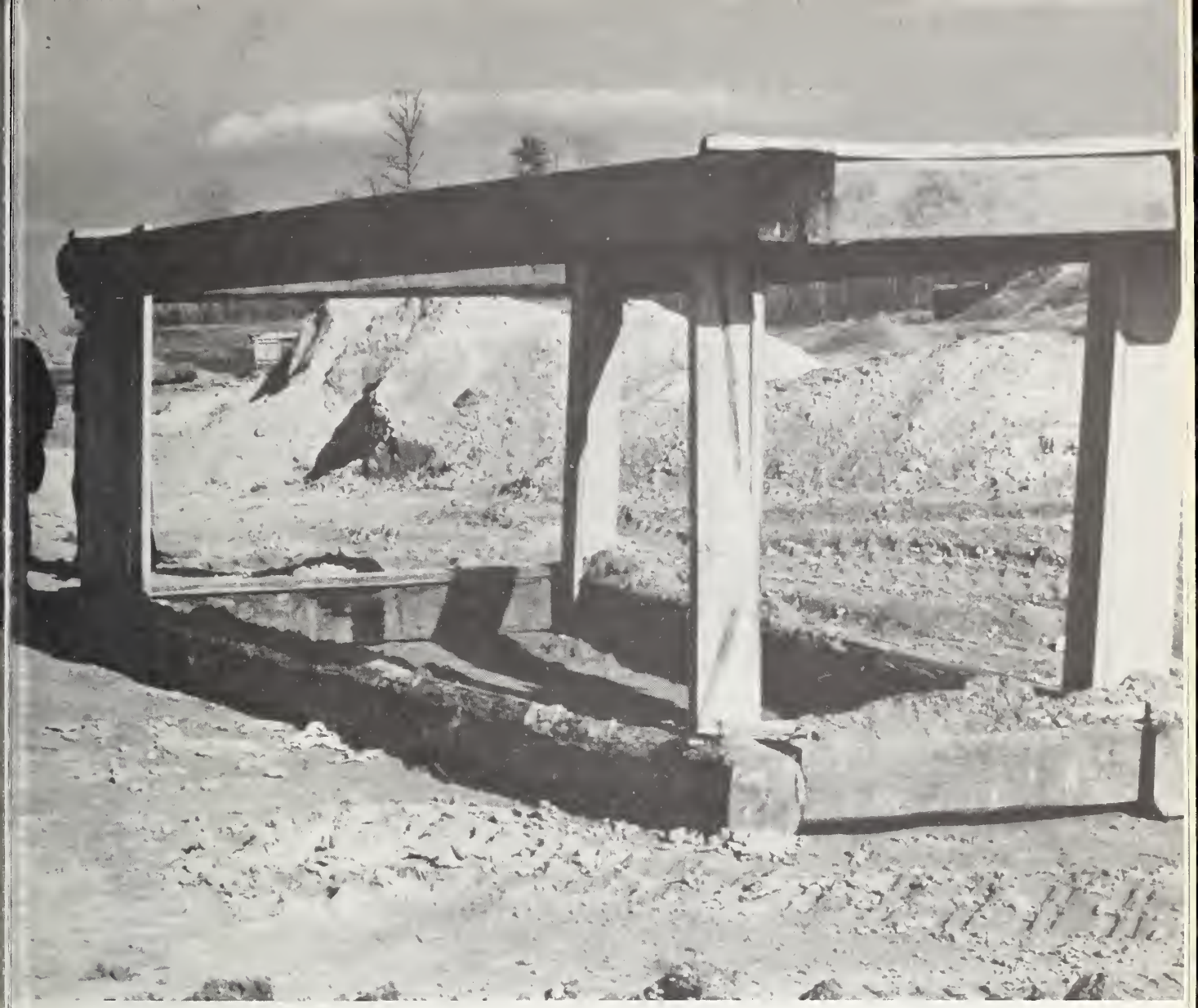

# 6. COMMENTARY ON RECOMMENDED SOIL CLASSIFICATION SYSTEMS

## 6.1 GENERAL

Two alternate systems are recommended, each of which has advantages and disadvantages which should be carefully scrutinized by the intended users before a final choice is made. The success of any system will ultimately depend on its acceptance by all the parties involved and on the ability of the intended users to apply it. One of the two systems should be adopted.

## 6.2 ALLOWABLE SIDESLOPES (Figure 5.1)

The sloped excavation configurations shown in Figure 5.1 are suggested in order to give more flexibility to contractors. Vertical sides are frequently required in specifications for pipe bedding. The configuration

in Case II would permit contractors to meet these specifications. In Case III any configuration is permitted that would provide overall stability (not necessarily local stability) equivalent to that of the sloped excavation. The 3-ft (1 m) limitation of the height of the vertical unsupported bank in the vicinity of the work area is provided to minimize the effects of a potential localized collapse. The 5 ft (1.5 m) limitation on the height of any vertical unsupported bank in Case III is consistent with present OSHA regulations.

## 6.3 LATERAL PRESSURE DIAGRAMS (Figure 5.2)

The simple soil classification systems recommended do not provide the information necessary for the selection of one of the design pressure diagrams shown in Figure 3.1. For instance, it is not always necessary to distinguish between sands and clays in order to use the Simplified System. Moreover,surface deposits are frequently heterogeneous and can not be readily placed into one of the categories in Figure 3.1. The uniform pressure diagram was chosen for all soil conditions.

A 2-ft (0.6 m) uniform surcharge is used to allow for accumulation of spoil, stored construction material, machinery, traffic or any other surcharge effects (normally construction equipment operates from one side and the spoil pile is on the other side).

## 6.4 SIMPLIFIED CLASSIFICATION SYSTEM (Table 5.1)

### 6.4.1 Soil Types (Table 5.1)

The intent of this system is to provide the simplest and least ambiguous scheme possible while still providing a reasonable range of choices to the contractor. It is felt that in most practical situations, three strength categories of bracing systems is all a contractor would want to use. However, should intermediate strengths be desired, an engineer could document the adequacy of the shoring using accepted engineering practice.

The decisions that must be made in order to classify a site are shown in the flow chart in Section 5.4.1.

### 6.4.2 Lateral Soil Pressures (Table 5.1)

In Table 6.1 the lateral soil pressures (weight effects) recommended for the Simplified System are compared with those calculated by accepted engineering practice in accordance with Figure 3.1. It can be seen that the Simplified Method is equal to, or more conservative than, accepted engineering practice for sands and soft clays, roughly equal for stiff clays, dense cohesive sands or stiff sandy clays and on the low side for medium clays. [Note that the upper limit for medium clays was calculated for the borderline case of 500 psf (24 kPa) cohesion and 20 ft (6 m) depth. This is an extreme case which in reality would be Type C (the stability number for medium clays, and thus the pressure

coefficient increases with depth)]. The reason for setting these values lower is based on several observations: (1) The CAL OSHA experience which extends over two decades produced no evidence of unsafe conditions; (2) Analysis of traditional timber shoring leads to the conclusion that actual field conditions for shallow trenches produce pressures which are much lower than those predicted by engineering analysis; (3) The nature of shallow trenches, which are open for short time periods and are generally excavated to their full depth before shoring is installed (particularly in clays) and where the stability number (N) tends to be low. These conditions will produce lateral forces in shallow trenches which are much smaller than those measured in deep excavations (see discussion Section 4.1). Nevertheless, before the system is actually adopted, consideration could be given to changing the definition of the "soft soil" category for clays and including clays with an unconfined compression strength up to 1500 psf (72 kPa).

Table 6.1 does not include submerged sands and organic soil; however, in both of these instances the Simplified System tends to predict lateral pressures which exceed those calculated by engineering analysis.

Table 6.1 Comparison of Lateral Weight Effects Calculated by Various Methods

| | $w_e$, lbf/ft$^3$ | | |
|---|---|---|---|
| Soil Type | Eng. Practice | Simplified System | Matrix System |
| Loose Sand | 25-26 | 40 | 40 |
| Med. Sand | 20-25 | 40 | 40 |
| Dense Sand | 17-20 | 40 | 40 |
| Soft Clay | 40-80[b] | 80 | 80 |
| Med. Clay | 44-70[b] | 40 | 40-60[a] |
| Stiff Clay (N<4) | 22-33 | 20-40[a] | 20-40[a] |
| Dense Cohesive Sand | 20-30 | 20-40[a] | 20-40[a] |
| Stiff Sandy Clay | 20-30 | 20-40[a] | 20-40[a] |

[a] Value that would be used if clay is fissured.

[b] Value changes with depth of trench.

6.4.3 Allowable Slopes (Table 5.1)

The philosophy used for allowable slopes substantially differs from that used in the present OSHA regulations, Table P-1 [9]. Instead of stipulating "stable" slopes for many different conditions, the "steepest allowable" slope of 3/4 horizontal to 1 vertical is stipulated for "intact hard" and "medium" soils. It is reduced to 1-1/2 horizontal to 1 vertical for "submerged and soft" soils. It is realized that the stipulated maximum allowable slope will not be stable in many instances.

For example, dry sands will not stand on an angle steeper than their angle of shearing resistance. However, in those instances the contractor will be unable to excavate at a steeper angle, and thus, the resulting excavation will be safe. On the other hand, the NBS field study indicates that in many instances construction slopes in short-term excavations are steeper than the maximum stable slopes that would be predicted by engineering calculations. This is particularly true for moist sands and silts where apparent cohesion stabilizes slopes steeper than the angle of shearing resistance. This and similar conditions are very difficult to quantify and rigid limitations, which by necessity are based on the worst case, would be unrealistically conservative and thus difficult to enforce. The difficulty of enforcing multiple choices of sideslopes was confirmed in the NBS field study [7] where many comments expressed unhappiness with existing provisions for sloping.

In recognition of these difficulties the approach recommended herein is similar to the one used when speed limits are enforced for vehicles on highways. The maximum allowable speed is not reasonable under all conditions (i.e., ice, rain, etc.) but it is the only speed that can be realistically enforced, since the "reasonable" speed is too difficult to quantify.

As an added protection, footnote "b" in Table 5.1 stipulates that if there is any sign of general or local instability the slope shall be cut to an angle which is flatter than the stable slope as observed in the field.

There are several reasons for the stipulated steepest allowable slopes. In stiff and medium clays these slopes will be stable for depths up to 20 ft. It can also be shown [16] that as the shear strength of a clay decreases and the excavation depth becomes critical, a base failure will occur even if the slope is flattened; for sands and silts as indicated before, this slope should be viewed as a maximum that in many instances cannot be attained. Data from the NBS field study, as well as experience with a similar provision in California indicate that the proposed maximum slope provision should work well in practice, as long as it is understood by contractors that this is a maximum allowable slope which is not necessarily appropriate for all cases. The flatter 1-1/2 horizontal: 1 vertical slope was proposed for "submerged and soft soil" to allow for potential instability caused by water seeping into the trench. In many of the "submerged" and "soft soil" conditions, sloping is not appropriate and would not be used by contractors.

### 6.4.4 Spacing of Spaced Supports (Table 5.2)

The maximum spacings correspond to existing practice and present OSHA provisions. Spaced supports are not always feasible for Type B soils. A procedure for field determination of whether spaced sheeting can be used is outlined in Section 5.4.1.

## 6.5 MATRIX CLASSIFICATION SYSTEM

### 6.5.1 Soil Classes (Table 5.3)

In this classification system the two important parameters of water and fissures are interfaced with four different soil types. This allows consideration of 16 possible situations. The advantage gained by this approach is that the important parameters are explicitly considered. This is accomplished at the expense of added complexity since it requires more decisions which require knowledge of soil properties and better training of the personnel that must make these decisions.

### 6.5.2 Lateral Soil Pressures (Table 5.4)

Comparison of the lateral soil pressures obtained by the Matrix System with those obtained by the Simplified System (see Table 6.1) indicates that for the cases tabulated (except for medium clay) the pressures are identical. However, there are differences for other cases. These are shown in Table 6.2 together with average pressures calculated by accepted engineering practice (actual pressures would change with depth). It can be seen that for submerged stiff clays and sands the pressures used in the Matrix System are closer to those used in engineering practice. In any particular case, the pressures computed by engineering practice may be even lower, since the "submerged" case includes every instance where water enters the trench, which includes cases where only part of the depth of the retained soil is submerged. If the Simplified System was to be used, the contractor would have the choice between using the conservative 80 $lbf/ft^3$ (130 $N/m^3$) pressure or retaining an engineer. In view of the fact that shallow excavation work is only rarely conducted below the groundwater table (in preference of dewatering) the involvement of an engineer in this situation seems reasonable and even desirable.

Table 6.2 Cases Where Lateral Soil Pressures Obtained by the Matrix System Differ from those Obtained by the Simplified System

| | $w_e$, $lbf/ft^3$ | | |
|---|---|---|---|
| Soil Type | Eng. Practice | Simplified System | Matrix System |
| Submerged Med. Sand | 43[a] | 80 | 60 |
| Submerged Stiff Clay | 44-45[a] | 80 | 60 |
| Submerged Med. Clay | 55-70[a] | 80 | 60 |
| Submerged Fractured Rock | 52-80[b] | 80 | 60 |

[a]Since by hydrodstatic pressure increases linearly with depth, 1/2 the effect of hydrostatic pressure was added to make a comparison possible.

[b]Pressures were taken from Reference [10].

### 6.5.3 Allowable Slope (Table 5.4)

While the slopes in the Matrix System, like those in the Simplified System, are maximum slopes they permit a distinction between soil types and also provide more guidance to the contractor. Note that a 1/2 horizontal to 1 vertical slope is permitted for Class I soils (Category A). This slope is not permitted in the Simplified System, where the emphasis is on elimination of complexity. Experience indicates that slopes are difficult to determine in the field and generally look steeper than they are. Thus, a 1/2:1 slope will have the appearance of a vertical cut. With even slight irregularities, a 1/2 horizontal in 1 vertical slope may actually become a vertial cut over large portions of an excavation. Thus work would have to be performed very carefully if 1/2 horizontal in 1 vertical cuts were to be used.

### 6.5.4 Spacing of Spaced Supports (Table 5.5)

The commentary in Section 6.4.4 also applies to Table 5.5.

## 6.6 FIELD IDENTIFICATION

### 6.6.1 Resolution of Conflicts

For both proposed systems visual-manual examination is all that is normally needed. However, decisions must be made on the basis of this field examination, and the question arises how conflicting opinions about the validity of these decisions are resolved. For the Simplified System there are two decisions where conflicting interpretations could arise: (1) is the soil "intact hard"?; (2) is the soil soft?

For intact hard soil there are three criteria:

a. There shall be no fissures.
b. The shear strength exceeds 1500 psf (72 Pa).
c. The excavated trench can stand without support (there is no sign of any distress after two hours).

For (a) there are three methods: visual examination, manual examination, and the drying test. All of these procedures will not always give repeatable results, because soil is a heterogeneous material, tension cracks come and go with the seasons and the drying test is not a very exact tool. Thus, there are some inherent difficulties in this instance.

The ultimate test would be that the trench should be able to stand unsupported for at least two hours without spalling or collapse.

For (b) there is a "hierarchy" of tests in terms of level of accuracy. At the bottom is the "thumb penetration test" (Table 4.3). At the next higher level are the "penetrometer" or "vane" tests for cohesive soils. At a still higher level are in situ tests: the Standard Penetration Test

[6], Cone Penetration Tests (ASTM D3441-75T) and Vane Shear Tests (ASTM D2573-72). At the top of the hierarchy, provided that an undisturbed sample can be taken, would be laboratory tests such as the Unconfined Compression Test [ASTM D2166-66 (1972)].

For (c) the test is not ambiguous in itself, but it is quite possible that two sections of trench, excavated in the same general area and condition, would behave differently. To determine whether a soil is "soft" the same heirarchy of steps as described under (b) above applies if the soil is cohesive. For cohesionless soils compliance with the provision of a 3 horizontal: 1 vertical stable slope can be determined visually. At a higher level an engineer could determine the angle of shearing resistance by in situ or laboratory tests.

For the Matrix Classification System, one more potentially ambiguous decision is whether a soil is "granular". Again, visual-manual examination will in most instances provide an answer. After this, the procedure described under the drying test (Section 5.5.4) could be followed; the next more accurate step would be conventional soil classification (D-2487-69) [4]. The ultimate judgment could be made by determining the cohesive strength (c) and the angle of shearing resistance ($\phi$) in a triaxial test. $\phi$ should be more than 18°, otherwise the soil would be a "soft soil".

6.6.2 Drying Test (Section 5.3.4)

This is a new test, even though it has some similarity with procedures described in ASTM D2488-69 [5]. However, the ASTM procedure involves remolding which would obliterate the in-situ fissures.

The Drying Test is to be conducted on an undisturbed sample. The test should be relatively insensitive to technique and to sample size, as long as the sample is large enough to include likely fissures and as long as the sample is adequately dried. After some experience is gained in the field, the drying test should be quantified with standardized sample sizes and testing procedures.

It should probably be mentioned that temporary shoring should be placed in a trench while taking any test samples.

## 7. REFERENCES


1. ASTM, Recommended Practice for a Visual Manual Procedure for Description of Soils, Designation D2488-69, American Society for Testing and Materials, Philadelphia, PA, 1978.

2. ASTM, Standard Method for Classification of Soils for Engineering Purposes, Designation D2487-69, American Society for Testing and Materials, Philadelphia, PA, 1978.

3. ASTM, Standard Method for Penetration Test and Split Barrel Sampling of Soils, Designation D1586-67, American Society for Testing and Materials, Philadelphia, PA, 1978.

4. CAL/OSHA, State of California Construction Safety Orders, Article 6, Excavation, Trenches, and Earthwork, and Appendix C, Helpful Construction Methods, Sacramento, CA, January 10, 1976.

5. Flaate, K. S., Stresses and Movements in Connection with Braced Cuts in Sand and Clay, Ph.D Thesis, University of Illinois, Urbana, IL, 1966.

6. Goldberg, D. T., Jaworski, W. E., and Gordon, M. D., Lateral Support Systems and Underpinning, Vol. II, Design Fundamental, DOT Report No. FHDA-RD-75-129, Washington, D.C., April 1976.

7. Hinze, J., A Study of Work Practices Employed to Protect Workers in Trenches NBSIR No. 79-1942, National Bureau of Standards, Dec 1979.

8. O'Rourke, T. D., and Cording, E. J., The Observed Performance of Subway Excavations, University of Illinois, NTIS Report PB 240905, September 1974.

9. Occupational Safety and Health Administration, Safety and Health Regulations for Construction, Subpart P, Excavation, Trenching and Shoring, Federal Register, Vol. 39, No. 122, June 24, 1974.

10. Peck, R. B., Deep Excavations and Tunneling in Soft Ground, Proceedings, 7th International Conference on Soil Mechanics and Foundation Engineering, State-of-the-Art Volume, pp. 225-250, Mexico City, 1969.

11. Peck, R. B., Hanson, W. E., and Thornburn, T. H., Foundation Engineering; John Wiley, New York, NY, 1974.

11a. Salomone, L. A. and Yokel, F. Y. Proceedings, Federal Workshop on Excavation Safety, September 19 and 20, 1978, NBSIR No. 79-1935 National Bureau of Standards, Washington, D.C., December 1979.

12. Salomone, L. A. and Yokel, F. Y., An analysis of the Response from an Associated General Contractors of America Survey of

Trenching and Shoring Practice, NBSIR 79-1936 National Bureau of Standards, Washington, D.C., December 1979.

13. Scott, R. F. and Shoustra, J. J., Soil Mechanics and Engineering, McGraw-Hill, New York, NY, 1968.

14. Skempton, A. W., Long-term Stability of Clay Slopes, The Rankine Lecture, Geotechnique, Vol. 14, No. 2, 1964.

15. Sowers, G. B., Sowers, G. F., Introductory Soil Mechanics and Foundations, Macmillan Publishing Co., Inc., New York, NY, 1970.

16. Terzaghi, K., Theoretical Soil Mechanics, John Wiley & Sons, Inc., New York, NY, 1956.

17. Terzaghi, K., and Peck, R. B., Soil Mechanics in Engineering Practice, John Wiley, New York, NY, 1968.

18. Thompson, L. J. and Tanenbaum, R. J., Excavation, Trenching and Shoring: The Responsibility for Design and Safety, Texas A&M Research Foundation Report, College Station, TX, September 1975.

19. Thompson, L. J. and Tamenbaum, F. J., Responsibility for Trenching and Excavation Design, J. of the Geotechnical Engineering Division, Proceeding of ASCE, Vol. 103 No. GT4, April 1977.

20. Thompson, L. J. and Tanenbaum, R. J., Survey of Construction Related Trench Cave-Ins, J. of the Construction Division Proceedings of ASCE, Vol. 103, No. C03, September 1977.

21. Tschebotarioff, T. P., Foundations, Retaining and Earth Structures, McGraw-Hill, New York, NY, 1973.

22. Tucker, L. R. and Reese, L. L., Soil Classification for Shallow Trenches, The University of Texas, Austin, TX, January 1979.

23. Winterkorn, H. F. and Fang, H. Y., Foundation Engineering Handbook, Van Nostrand Reinhold Co., New York, NY, 1975.

24. Wisconsin Administrative Code, Chapter Ind 6, Trench, Excavation and Tunnel Construction, Wisconsin Administrative Register No. 188, Madison, WI, August 1971.

25. Yokel, F. Y., Recommended Technical Provisions for Construction Practice in Shoring and Sloping of Trenches and Excavations, Technical Note No. 1111 National Bureau of Standards, Washington, D.C., 1980.

26. Youd, T. L. and Craven, T. M., Lateral Stress in Sands During Cyclic Loading, Proc. Paper 11093 (Technical Note), J., Geotechnical Division, ASCE, Vol. 101 No. GT2, February 1975.

## 8. ACKNOWLEDGMENTS

The contribution of the following persons is gratefully acknowledged.

Jim Belke, Speed Shore Corp.
Luther Bell, Hustler Construction Co.
George Breadberry, Speed Shore Corp.
Harry Cagel, Cagel Construction Co.
Red Cass, Big Red Construction Co.
Del Talley, Austin AGC
Pete Ellis, Inter County Construciton Co.
Tom Ervin, Boh Brothers Construction Co.
R. G. Griffith, Griffith Construction Co.
Cliff Farmer, CAL-OSHA
William Hazel Jr., Hazel Construction Co.
Tom Gerry, FALCO Construction Co.
Mikey Landry, Boh Brothers Construction Co.
Jim Lapping, AFL-CIO
Steve O'Reilly, State Construction Co.
Henry Pate, Grad. Student, University of Texas
Dave Plank, Speed Shore Corp.
Larry Salomone, NBS
Roy C. Schmidt, Schmidt Construction
Art Schmuhl, A.G.C.
Tom Seymour, OSHA
Frank Speer, FALCO Construction Co.
Roger L. White, City of Austim
Jim Williams, Houston Contractors Assoc.

*Trenching machine used in trench braced by hydraulic shores*

APPENDIX

BACKGROUND INFORMATION ON
TRENCHING PRACTICE AND ACCIDENTS

## A.1 GENERAL

The background information presented herein was compiled in Reference [22].

## A.2 BACKGROUND INFORMATION

### A.2.1 SOURCES OF INFORMATION

Very little published information is available which provides quantitative data regarding trenching failures or lateral earth pressures against shoring in braced shallow trenches and moreover trenching practices vary widely in different geographic regions of the nation.

Thompson and Tannenbaum [18, 19, 20] presented results of extensive surveys of accident reports and contractor opinions. The National Bureau of Standards [7, 22] obtained data regarding trenching practices among members of the National Utility Contractors Association and interviewed selected utility contractors to determine their practices with regard to soil identification and trench bracing. The Associated General Contractors conducted a questionnaire survey in 1977 [12] which yielded further information. In addition, reports of fatal accidents of 1973-74, given by OSHA Compliance Officers, have been reviewed in an attempt to determine common causes or characteristics of trench cave-ins. Results of some of these sources are discussed below.

### A.2.2 THE THOMPSON AND TANNENBAUM DATA

A report was written in 1975 [18] from data accumulated in a study funded by the Associated General Contractors of America. Basic sources of information came from 86 major newspapers and 120 questionnaires returned by contractors. The newspaper clippings identified both a variety of soil types, mentioned in section 1, and many others as possible contributors to trenching collapses. Of 120 contractors responding, 52 reported a total of 85 cave-ins during the history of their companies. Information of soil types in the contractor reports were sketchy, but cave-ins in all types of conventionally identified soils were reported. Probable factors other than soil conditions which were mentioned as contributing to cave-ins were excessive rainfall, seepage, vibrations, and equipment near trenches. The majority of the failures reported by Thompson and Tannebaum were in trenches less than 20 ft (6 m) deep [18].

### A.2.3 NBS FIELD STUDY

As a portion of the overall NBS study, Hinze [7] interviewed contractors and their staff and analyzed results from a survey conducted by the National Utility Contractors Association (NUCA). The NUCA survey had 223 responses. Ninety-three percent of the trenching work of responding contractors involved depths of 15 ft (4.5 m) or less. About 75 percent reported average depths to the water table less than 15 feet. Trench

widths were seldom more than 6 ft (2 m). All types of soils were encountered, and most contractors mentioned both wet and dry conditions. Over 75 percent of the contractors reported less than 100 ft (30 m) of trench open at any one time. Contractors seldom employ soils engineers. A considerable amount of additional data related to safety practices and firm characteristics was assembled in an NBS field study [7].

### A.2.4 INTERVIEWS WITH SELECTED CONTRACTORS

Tucker and Reese [22] held interviews with 15 selected contractors, city officials, manufacturers of shoring equipment, and safety officials. In general, the interview results were consistent with the data obtained from Reference [7].

Most contractors work within a radius of 50 miles of their offices and in soils with which they are generally familiar. They seldom have soil boring results available prior to bidding or starting a project. Even if such data are available, they are considered unreliable by the contractors. If contractors have concern about a site, they take a backhoe out and dig a test section to determine site characteristics. In such cases, contractors are normally looking for depths to rock and water, rather than soil characteristics.

All contractors interviewed prefer to slope trench sides for stability, as compared to any other safety system. Some will slope even if the trench walls could stand vertically, because of backfill convenience. There are instances, however, where right-of-way restrictions require vertical sides. All contractors use hydraulic backhoes extensively.

Decisions regarding trench bracing are normally made by job-site supervisors. Some contractors state they would always have a supply of shoring material onsite to minimize the inconvenience factor in a shoring decision. Although shoring slows work slightly, it is not normally considered a major factor for decision. The unanimous attitude of those interviewed was that safety takes the highest priority and that job foreman or superintendents are encouraged to take safety precautions if they have any doubts regarding stability.

Job site supervisors have major responsibilities for decisions. Superintendents and foremem normally have several years experience. Even contractors with registered engineers on their staffs consider the job supervisors as more capable of identifying soils and determining shoring needs. Most soils are defined by local generic terms rather than geological or geotechnical terms.

A variety of crude tests and indicators are used for soil types and stability indicators. The necessary slope angle is normally determined by the backhoe operator who may strike a trial slope several times with the backhoe bucket. If he can induce sloughing in this matter, he will flatten the slope. Many contractors said they looked for backhoe teeth marks in the excavation. If these are presented and make clear indenta-

tions, it is an indication of significant clay content. Other contractors watch surface crack movements, kicking loose soil into them and watching for progressive opening. Many mentioned signs of "ravelling" in clay soils and surface spalling on the trench sides indicating movement or embankment distress.

Most contractors expressed fears of "stable" soils that collapsed suddenly. They also felt that most accidents are caused by carelessness of field personnel, who fail to exercise proper precautions in known unstable environments. Many mentioned such things as "layered" soils, "fissured" clays, trenches left open too long, rainfall or seepage water, trench discontinuities, vibrations, and disturbed soils as hazardous situations.

### A.2.5 THE ASSOCIATED GENERAL CONTRACTORS (AGC) QUESTIONNAIRE [12]

The Safety Division and Municipal Utilities Division of the Associated General Contractors distributed a lengthy survey questionnaire in late 1977, which received 23 responses from a wide geographic area. Of the work performed by the 23 respondents, about 70 percent was for seepage, and 23 percent for water systems. Fifty percent of the work utilized sloped sides, while bracing systems were used an average of 43 percent of the time.

Typical soil conditions encountered by the respondents were:

| | |
|---|---|
| Stiff clay | 29 percent |
| Medium clay | 18 percent |
| Soft clay | 16 percent |
| Sand and gravel | 15 percent |
| Loose sand | 10 percent |
| Muck | 6 percent |
| Loess | 6 percent |

Written responses were given regarding the soil type causing the most concern for safety against collapse. Although these varied somewhat, the most frequent responses were "clay likely to crack" and loose silt or sand."

Most contractors (79 percent) stated that they normally left their trenches open less than one day. Almost half of the trenches are left open less than 2 hours. The typical length of an unbraced trench section averaged 40 feet (12 m) and the typical length of a braced section averaged about 50 feet (15 m).

As indicated by the interviews with contractors, the questionnaire showed a preponderance of decisionmaking authority with job site supervisors. General superintendents and foremen are heavily involved with all decisions regarding bracing and sloping. The job foreman or superintendent is almost universally considered to be the person most familiar and qualified to describe the physical characteristics of a soil.

One question related to the uniformity of soils from the ground surface to the bottom of the trench. Of those responding, 75 percent stated that soils in their region are normally not uniform. Responses indicated many combinations, but both soils increasing in strength and soils decreasing in strength with depth were mentioned. Soils changing radically in character, such as granular to cohesive were frequently mentioned.

Responses to the question regarding site conditions causing the greatest safety hazards were as follows:

| | |
|---|---|
| Straight trench | 6 percent |
| Manholes | 4 percent |
| Intersections of trenches | 23 percent |
| Vibrating areas | 14 percent |
| Disturbed soils | 38 percent |
| Narrow right-of-way | 14 percent |

Another question was posed regarding "surprises" during a trenching project. Answers were given in terms of frequency of occurrence. Responses were as follows:

| | Frequently | Occasionally | Rarely |
|---|---|---|---|
| Unexpected Ground Water | 3 | 10 | 9 |
| Radical Change in Soil Type | 9 | 8 | 5 |
| Tree Roots | 3 | 11 | 8 |
| Unanticipated Utility Lines | 8 | 11 | 3 |
| Previous Excavations or Disturbed Soil | 3 | 15 | 4 |
| Unusually Heavy Surcharge | 0 | 7 | 10 |

The contractors were asked if they frequently encountered soils which lose stability due to a variety of causes. Responses are tabulated below.

| | |
|---|---|
| Rainfall | 12 |
| Vibration | 13 |
| Increased Subsurface Water | 13 |
| Drying | 11 |
| Temperature Changes | 2 |
| Inclined Bedding | 3 |

Survey responses suggest that moisture changes and vibration have significant effects on soil stability.

In summary, a wide variety of soils is encountered by trenching contractors. Soils often vary with depth in a trench. Unexpected conditions often occur and soils may lose stability with time due to weather or environmental factors.

### A.2.6 OSHA COMPLIANCE OFFICER REPORTS FOR 1973-1974

As a means of gathering information on actual failure circumstances and situations, 64 reports from OSHA Compliance Officer investigations during 1973-74 were furnished by OSHA in September 1977. These have been reviewed and the results summarized [22]. Although the data are sketchy, the pertinent results are discussed below.

Collapses normally occurred in rather shallow trenches. Of the 46 cases in which trench depths were given, 40 were less than 12 ft (3.7 m) deep. Soil identification was not normally made in an extensive fashion. However, of the 29 instances in which soil was identified, 17 cases occurred in soil classified as "disturbed or fill." Free water was noted in seven instances, although no mention of water was made in 56 cases.

In at least 2 cases, vibrations were assumed to be contributing to the accidents. Another 23 locations were near streets or railroads which are possible sources of vibrations. Fourteen of the locations were not near possible vibration sources. No information was given in 23 other instances.

Of the 54 instances in which information was available, 42 of the failures occurred in straight sections. Discontinuities of the trenches were possibly involved in 12 failures.

Secondary collapses of the opposite walls of the trenches were noted in 5 instances.

No information was given regarding sloping or shoring in 20 of the 64 cases. In those where information was available, 4 failures were in sloped trenches, 6 failures had skip shoring, 7 tight sheeting and 2 trench boxes. Twenty-two occurred in trenches with no shoring. Six accidents occurred during installation or removal of shoring.

In accordance with this data sample failures generally occurred during good weather. The injured workmen were normally mature individuals. Of the oldest persons injured, 40 were over age 30 and 18 were over age 50. This information is consistent with that from the contractor interviews [21]. Job site personnel are often experienced and tend to stay with a contractor for many years. Thus, the number of accidents involving older, and presumably more experienced, personnel tends to refute arguments that experience is an adequate factor in judging trench wall stability.

It is unfortunate that more data are not contained in the Accident Reports. These could be the most valuable source of quantitative

information available regarding failure conditions. Such items as trench dimensions, soil properties and identification, and details of shoring systems would be invaluable.

### A.2.7 SUMMARY OF BACKGROUND INFORMATION

Most of the background data were obtained from contractor questionnaires or interviews, or from case histories of accidents. Very little data of a quantitative nature are available, that could be used to quantify numerical approaches to problems of trench stability. Soil properties often vary widely both from the top to the bottom of a trench and linearly along a trench. Job site personnel are considered by contractors the most qualified persons to judge trench stability and to determine necessary support measures. Such supervisory personnel normally have several years experience in the area of work. However, the number of fatalities and accidents involving experienced personnel indicates that decisions on sloping and shoring should not be based solely on experience.

It is apparent that many factors other than those identified in a conventional soil characterization influence trench stability. The more important factors include soil cracks and fissures, free water, previous disturbance, vibrations, and weather. Time is obviously a critical item, as trenches will remain open long enough for some activities, but collapse suddenly after a period of time.

## A.3. TRENCHING CHARACTERISTICS AND PRACTICES

### A.3.1 GENERAL

In current practice in the United States, most utilitiy contractors prefer to stabilize the sides of trenches by sloping rather than by bracing. This attitude is, in part, the result of the fairly recent development and introduction of the hydraulic backhoe in the industry. These machines enable contractors to dig and handle a wide range of soils at rapid rates. A significant number of the utility contractors engaged in new subdivision work have organized their entire operations around the hydraulic backhoe and do not go into a detailed design of most of the trenches they dig. Instead, they depend on past experience on jobs in the local area in submitting a bid. They rely on their job foremen and/or backhoe operators to slope the trench sides adequately to ensure stability during the relatively short period the trench will be left open. In deep trenches or in highly non-cohesive soils, they often resort to a combination of methods; sloping the sides of the upper portion of the trench and bracing the lower portion. Many of the contractors will not bid on a project when conditions dictate extensive bracing of the entire trench.

For water lines and other relatively small trenches, trenching machines are sometimes employed to cut vertical sides which are seldom braced because workmen can easily get out of the trench if the sides fail.

There are, however, some jobs involving deeper trenches and vertical sides, particularly in urban areas. A small number of contractors employ large trenching machines on these projects and rely upon bracing to ensure stability of the sides. A similarly small number of contractors concentrate on jobs involving rock, and employ drilling and blasting to fracture the material so that it can be excavated. These contractors cut vertical trench sides and do not use bracing except when inclined bedding makes it necessary. If a given project requires several types of trench work, the successful bidder frequently subcontracts the portions his crews are not familiar with.

### A.3.2 RIGHT-OF-WAY

Restrictions imposed by narrow right-of-ways often make some form of bracing necessary. This is particularly true in urban areas, where interference with traffic or other utilities cannot be tolerated. In older cities, these conditions are often further complicated by disturbed soil from earlier projects, which makes stabilization by sloping less dependable. Bracing, rather than sloping, is also necessary when trenches pass close to structures which could be damaged by failure of the trench or excessive settlements.

### A.3.3 DEPTH

For any slope other than vertical, the additional volume of soil to be excavated to slope the sides is quadrupled each time the depth is doubled. As trenches become deeper, sloping becomes less practical because of the large volume of earth involved and the increased distance from the trench centerline to the spoil pile. The maximum practical depth which can be stabilized by sloping is a function of the soil and, equally important, of the size and characteristics of the available backhoes. In some relatively deep trenches, a trench box is used to guard against collapse of the vertical-sided lower portion of the trench and the upper sides of the trench are sloped for stability. Some form of bracing is generally employed on the vertical sides cut by trenching machines when the depth exceeds four to five feet.

### A.3.4 TIME AND SITE CONDITIONS

The amount of time a trench will be open, coupled with the influences of vibration, water, and soil structure, significantly affects the stability of trench sides and influences the decision between sloping and bracing. Vibrations from a number of sources can seriously reduce the stability of a soil mass. The longer the trench is open, the greater is the chance of failure. When trenching operations do not involve large pipe or special construction, trenches are seldom left open more than an hour or two, and a wide range of soils will retain adequate stability for safety with slopes as steep and 3/4 horizontal to 1 vertical. If a segment of trench is to remain open for a relatively long period, gravity forces on the exposed sides, vibrations, and other factors reduce the stability of the soil mass and either

flatter sloping or stronger bracing is required. This is particularly true for trenches through clayey materials, where dessication and resulting cracks and progressive deformation can weaken the soil structure and cause failure of a trench side which was stable when it was initially cut. If the soil is layered and the bedding is inclined, flatter sloping or stronger bracing of one side may be required even when the trench is to be open for only a very short time.

### A.3.5 CODES AND SPECIFICATIONS

In many cases, the choice between sloping and bracing is dictated by codes or project plans. Areas where the water table is high and shifting of material is a problem often have codes which specify that conduits be protected by subsurface sheeting. Bracing, rather than sloping, is then the normal approach. Similarly, bracing is generally employed when plans for the facility call for installation of forms for concrete or select fill.

### A.3.6 SLOPING

When determined to be the most efficient method and when right-of-way restrictions don't preclude its use, sloping is by far the contractor's preferred method of trench stabilization. This method requires a minimum of materials and handling and provides the most reliable means of personnel safety. Sloping is generally performed by hydraulic backhoes unless other equipment is available. Normally the backhoe slopes the bank back as the trench is being dug, providing a safe trench for the workers at all times. The choice of angle to which the bank is sloped is usually at the discretion of the backhoe operator; unless directed by the foreman, the operator will remove soil until he is satisfied that there is no danger of sloughing or slumping of the bank. The backhoe operator rarely is aware of the exact angle required by Table P-1 of the OSHA provisions [9], but instead relies on his own experience and knowledge of the particular soil conditions.

### A.3.7 SHORING

#### A.3.7.1 General

Shoring for trenches or narrow excavations is usually accomplished by bracing one bank against the other. The basic shoring system includes a sheath of wood planks or plywood placed against both sides of the trench, horizontal members or wales placed lengthwise to support the sheathing and a system of shores to brace the wales against the sheathing

#### A.3.7.2 Types of Sheathing

Skeleton Sheathing - consists of a continuous wood frame supporting sheathing planks, placed vertically at intervals of 4-8 ft (1.2-2.4 m)

against the trench walls. Skeleton sheathing is used where the banks consist of intact stable cohesive soils, primarily to prevent the development of initial failures, cracks or spalling.

Close Sheathing - consists of planks placed side by side along a continuous frame. Its use is to prevent local crumbling of soils. Since some space exists between the planks, it should not be used with silts or other fine grained cohesionless soils which could seep out through these cracks.

Tight Sheeting - consists of specially edged planks, generally tongue and groove, eliminating the crevices existing in close sheathing. Tight sheeting is either wood or steel and is used where water or fine wet soils must be retained. The bracing used for tight sheeting is designed for this use from the start and is generally stronger than that required for other types of sheathing.

Timber Sheet Piles - when using this system, the contractor normally leaves the piling permanently in the ground since removal usually destroys the wood's usefulness. This system consists of planks which are either square edged or tongued and grooved and which are driven into the ground before it is excavated. The toe of the piles is usually cut on a diagonal with the point on the grooved side so that in driving, each pile will be continuously wedged back against the previously driven pile. The sections are driven with the tongue leading. After driving, adjacent pieces may be spiked together across the joints to form a solid wall.

A.3.7.3 Wale Systems

Normally most contractors use large timbers for wale systems, although some steel shapes are used and recently lightweight aluminum wales have been introduced. Timber members are usually 8 x 8 in (200 x 200 mm) which are set into position at the quarter points of the sheathing and supported by cross bracing.

A. 3.7.4 Bracing Systems

Timber shores have been used extensively in the past, with sizes varying from state to state. One rule, taken from the Construction Safety Orders of the State of California pertaining to hard or compact soils, requires that bracing between wales in trenches from 5-10 ft (1.5-3 m) deep should be 4 x 4 in. (100 x 100 mm) timbers not over 5 ft (1.5 m) apart, increasing to 6 x 6 in. (150 x 150 mm) for depths over 10 ft (3 m). Other states have similar standards.

Trench jacks consist of two shoes with pronged surfaces that bear against the wale system, or in the absence of wales, directly against the sheathing. The shoes are held against the sheathing by an extendable connecting bar (usually a screw jack which can be extended). This

assembly is placed against the sheathing and extended or jacked outward, providing the necessary lateral pressure to support the sides of the trench.

Aluminum hydraulic shores - have been developed in recent years. The shore is a hydraulic cylinder either connected to aluminum bearing plates or aluminum shores. This system has the advantage of remote installation. The man installing these shores can stay outside of the trench during installation.

A.3.7.5 Skip Shoring

This method utilizes the cohesive strength of the soil along with arching effects, thereby allowing the contractor to support the wall by individual spaced timber struts, trench jacks or hydraulic shores. The use of spaced vertical or horizontal planks supported at the quarter points by two struts (cross braces) is the most common method of skip shoring. The foreman makes the onsite decision as to whether the soil has the strength required. Preliminary soils investigations give estimates of the strength, but not until the trench has been cut can an accurate estimate of the strength be made. When a soil has demonstrated its capacity to stand vertically with only skip shoring, the foreman will allow workers into the trench.

A.3.8 TRENCH BOXES

Trench boxes are rigid boxes which are placed in the trench before the entry of workers. The sidewall of the boxes are strong enough to resist the lateral soil pressures. Thus, inside the box is a protected work area. A relatively recent development in providing worker safety, trench boxes permit rapid construction work as well as providing protection for workers. Some designs allow assembly in minutes at the job site, and space saving flat storage for shipment from job to job. Contractors can use the boxes in several ways. The box can be placed in the line of excavation digging the trench from inside the box, removing the soil and subsequently pushing each side wall of the box down to the pipe grade. This technique reduces the amount of soil that must be removed, and lessens the damage to surrounding landscape. Another technique is to dig the trench in front of the box, then pull it into the new section of trench with the backhoe. The technique uses the backhoe for all phases of trenching, reducing the need for several pieces of machinery. This technique requires that the trench be dug at least a foot wider than the box so that skin friction between the box and the sidewall of the trench is reduced as much as possible. After the trench box has been pulled through a section of trench, another machine, usually a dozer, backfills the trench immediately to reduce the risk of excessive soil movement.

## A.3.9 EQUIPMENT

Backhoes are excavating machines which are primarily used to dig below the natural surface of the ground on which the machine rests. They are adapted to excavating trenches, pits for basements, and general grading work which requires precise control of depths. In some respects backhoes are more versatile than wheel or ladder type trenching machines, especially in digging utility trenches whose banks are sloped and for which trench shoring will not be used. Hoes can remove the earth as it caves in to establish stable slopes, whereas trenching machines cannot do this easily. There are two basic types of backhoes. Track mounted backhoes are heavy duty and are generally quite large [their weights range from approximately 32,000 lb to 120,000 lb (14,500 kg - 54,400 kg)]. Loaded combos are designed for more general work. They are mounted on rubber tires and are equipped with a loader bucket on one end and a backhoe bucket on the other.

Trenching machines are primarily used for digging utility trenches for water, gas, and oil pipelines, telephone cables, drainage ditches, and sewers where the job and soil conditions are such that they may be used. They are capable of relatively fast digging with accurate controls of depths and widths of trenches which reduces expensive hand finishing to a minimum. Trenching machines are usually crawler-mounted to increase their stability and to distribute their weight over a greater area.

There are three basic types of trenching machines. A wheel-type trenching machine consists of a power-driven wheel, on which are mounted a number of removable buckets, equipped with cutter teeth. The machine is operated by lowering the rotating wheel to the desired depth, while the unit moves forward slowly. The earth is picked up by the buckets and deposited into an endless belt conveyer, which can be adjusted to discharge the earth on either side of the trench.

Continuous-chain trenchers are designed for fairly shallow, narrow trenches using digging scoops along a chain. The chain is supported on a boom attached to the rear end of the prime moving tractor unit. The major disadvantage of continuous-chain trenchers is that the lack of rigidity in the chain prevents the buckets from digging into tough material; they tend to twist over or move out of such earth. Only in loose materials can the buckets be expected to get full loads.

The third variety is the ladder type trenching machine. It combines the advantages of a wheel trencher and a continuous-chain trencher. A ladder like projecting frame serves as the boom which can be raised or lowered into the excavated trench. The excavation depth can thus be adjusted while moving. The ladder type trencher can therefore operate on a more irregular surface than the wheel type. It has two continuous chains on both sides of the projecting frame with buckets like those on the wheel trencher attached to and between the two chains. In this way it can achieve the high production rates, lateral rigidity, and power of the wheel trencher.

## A.3.10 CONTRACTOR CHARACTERISTICS

In current practice in the United States, trenching is by and large a local operation. Utility contractors seldom bid on projects which are located more than 50 to 75 miles from their home base. Significant exceptions to this arrangement are the general contractors who have a trenching division and often move their trenching crews to other localities when their projects include trenches. Other exceptions are the large pipeline projects, which attract bidders from all over the country.

Since they normally concentrate their work in a relatively small area, utility contractors have considerable knowledge of the physical characteristics of the soils in their area. They are not concerned with classical identification procedures; the fact that a given soil contains certain percentages of clay, mica, sand, and other materials is of only incidental interest to them. Instead, they rely on their personal experience and the experiences of their fellow contractors in the area for deciding on the extent of sloping or bracing required for a trench in a given locality during a given season of the year. Their experience and knowledge also enables them to predict, with fair accuracy, the problems they will encounter with subsurface water and rock formations.

Contractors have only limited confidence in soil boring results. When there is some doubt about the conditions they will encounter, many contractors, either individually or in cooperation with other bidders, dig several test pits with backhoes along the trace of the project to obtain the additional information they need in order to submit intelligent bids. Presence of subsurface water and rock are primary concerns, but the contractors also obtain additional information on site stability from the digging process and from leaving the pits open several hours.

As indicated previously, utility contractors tend to specialize in one type of trenching work. Their machinery and the experience of their crews are a fundamental element in their decision to obtain stability by sloping or by bracing.

In all but the very large diameter lines, pipe-laying is a dynamic operation, moving along at the rate of several hundred or more feet per day. Soil structure, moisture content, and related factors change constantly and the frequency of significant changes increases rapidly with increases in the rate of production. Decisions on stability must not only be made accurately, but also promptly, if the contractor is to be successful. As a consequence, most firms rely on their job foremen and equipment operators for day-to-day decisions on sloping and bracing. Although these people are normally neither engineers nor soils technicians, confidence in their judgment appears to be well-deserved in most cases. The foreman with 20 or more years of experience in trenching is the rule; 10 years or less is the exception. Foremen normally know as much, if not more, about the physical characteristics of the soil

in their local area as the knowledge that could be obtained through conventional soil exploration and laboratory tests. Some contractors solve their bracing problems by simply stockpiling standard sizes of timber on site for use when and if the foreman decides that bracing is necessary. Bracing methods developed by the firm from experience with soils in the area are normally employed without detailed design and analysis.

NBS-114A (REV. 9-78)

| U.S. DEPT. OF COMM. BIBLIOGRAPHIC DATA SHEET | 1. PUBLICATION OR REPORT NO. BSS 121 | 2. Gov't. Accession No. | 3. Recipient's Accession No. |
|---|---|---|---|

**4. TITLE AND SUBTITLE**

Soil Classification for Construction Practice in Shallow Trenching

**5. Publication Date**

March 1980

**6. Performing Organization Code**

**7. AUTHOR(S)**

Felix Y. Yokel, Richard L. Tucker and Lymon C. Reese

**8. Performing Organ. Report No.**

**9. PERFORMING ORGANIZATION NAME AND ADDRESS**

NATIONAL BUREAU OF STANDARDS
DEPARTMENT OF COMMERCE
WASHINGTON, DC 20234

**10. Project/Task/Work Unit No.**

**11. Contract/Grant No.**

**12. SPONSORING ORGANIZATION NAME AND COMPLETE ADDRESS** *(Street, City, State, ZIP)*

Occupational Safety and Health Administration
Department of Labor
Washington, D.C. 20210

and

National Institute for Occupational Safety & Health
Department of HEW
Washington, D.C. 20201

**13. Type of Report & Period Covered**

Final

**14. Sponsoring Agency Code**

**15. SUPPLEMENTARY NOTES**

Library of Congress Catalog Card Number: 80-600014

☐ Document describes a computer program; SF-185, FIPS Software Summary, is attached.

**16. ABSTRACT** *(A 200-word or less factual summary of most significant information. If document includes a significant bibliography or literature survey, mention it here.)*

Construction practices in trenching and data on potential causes of trenching accidents are reviewed. A study is made of the soil properties and site conditions that must be identified in order to determine the stability of shored and sloped excavations against cave-ins. Two possible alternate soil classification methods are recommended. The methods are simple enough to be used by construction foreman and at the same time use parameters which can be measured or identified without ambiguity. The classification methods are supplemented by appropriate field tests and correlated with allowable side slopes and lateral soil pressures on shoring.

**17. KEY WORDS** *(six to twelve entries; alphabetical order; capitalize only the first letter of the first key word unless a proper name; separated by semicolons)*

Braced excavations; construction; excavation; geotechnical engineering; retaining structures; shoring; slope stability; soil classification; soil pressure; soil testing; trenching

**18. AVAILABILITY** ☒ Unlimited

☐ For Official Distribution. Do Not Release to NTIS

☒ Order From Sup. of Doc., U.S. Government Printing Office, Washington, DC 20402, SD Stock Number 003-003-02162-8

☐ Order From National Technical Information Service (NTIS), Springfield, VA. 22161

**19. SECURITY CLASS (THIS REPORT)**

UNCLASSIFIED

**20. SECURITY CLASS (THIS PAGE)**

UNCLASSIFIED

**21. NO. OF PRINTED PAGES**

89

**22. Price**

Price 3.75

USCOMM-DC

## INSTRUCTIONS

**FORM NBS-114A: BIBLIOGRAPHIC DATA SHEET.** This Bibliographic Data Sheet is an NBS adaptation of the form prescribed by COSATI guidelines (Appendix F, NBS Manual for Scientific and Technical Communications).

**Item 1** - Complete if information is available; otherwise Publication Office will complete later. If non-NBS publication, state "see item 15". (Enter other agency sponsor's report number if requested to do so, and enter NBSIR number under item 8).

**Items 2, 3, 6, 10, 14** - Ignore, these are reserved for possible future use.

**Items 4, 7** - Complete as shown on manuscript. When NBS-114A is resubmitted along with NBS-266, following publication of non-NBS media papers, these items must agree with published paper.

**Items 5, 21, 22** - Leave blank, Publication Office will complete.

**Item 8** - Leave blank unless other agency sponsor's number appears as Item 1; then enter NBSIR number here.

**Item 9** - If not NBS, blank out and enter Grantee/Contractor name and address, or both if performed jointly.

**Item 11** - Complete when applicable.

**Item 12** - Enter NBS name and address, other agency sponsor's name and address, or both if joint sponsorship. State "same as item 9" when appropriate.

**Item 13** - Enter "Interim", "Final", or period covered.

**Item 15** - Enter other relevant information, i.e., related or superseded documents. Also used by Publication Office for Library of Congress catalog number, and entry of non-NBS media citation upon receipt of Form NBS-266 from author.

**Item 16, 17** - Complete with special care. Guidance given in NBS Manual. Abstract must agree with the one in the published paper.

**Item 18** - Indicate "Unlimited" - for open-literature documents cleared under NBS editorial procedures, or "For official distribution. Do not release to NTIS" - for limited, restricted, or need-to-know material. (See 5.1.4.2.1 of Brady memo dated January 16, 1973 "Reports to Sponsors.") Publication Office will mark appropriate "order" box and complete Stock No. when known.



☆ U.S. GOVERNMENT PRINTING OFFICE : 1980—O-314-364

# NBS TECHNICAL PUBLICATIONS

## PERIODICALS

**JOURNAL OF RESEARCH**—The Journal of Research of the National Bureau of Standards reports NBS research and development in those disciplines of the physical and engineering sciences in which the Bureau is active. These include physics, chemistry, engineering, mathematics, and computer sciences. Papers cover a broad range of subjects, with major emphasis on measurement methodology and the basic technology underlying standardization. Also included from time to time are survey articles on topics closely related to the Bureau's technical and scientific programs. As a special service to subscribers each issue contains complete citations to all recent Bureau publications in both NBS and non-NBS media. Issued six times a year. Annual subscription: domestic $17; foreign $21.25. Single copy, $3 domestic; $3.75 foreign.

NOTE: The Journal was formerly published in two sections: Section A "Physics and Chemistry" and Section B "Mathematical Sciences."

**DIMENSIONS/NBS**—This monthly magazine is published to inform scientists, engineers, business and industry leaders, teachers, students, and consumers of the latest advances in science and technology, with primary emphasis on work at NBS. The magazine highlights and reviews such issues as energy research, fire protection, building technology, metric conversion, pollution abatement, health and safety, and consumer product performance. In addition, it reports the results of Bureau programs in measurement standards and techniques, properties of matter and materials, engineering standards and services, instrumentation, and automatic data processing. Annual subscription: domestic $11; foreign $13.75.

## NONPERIODICALS

**Monographs**—Major contributions to the technical literature on various subjects related to the Bureau's scientific and technical activities.

**Handbooks**—Recommended codes of engineering and industrial practice (including safety codes) developed in cooperation with interested industries, professional organizations, and regulatory bodies.

**Special Publications**—Include proceedings of conferences sponsored by NBS, NBS annual reports, and other special publications appropriate to this grouping such as wall charts, pocket cards, and bibliographies.

**Applied Mathematics Series**—Mathematical tables, manuals, and studies of special interest to physicists, engineers, chemists, biologists, mathematicians, computer programmers, and others engaged in scientific and technical work.

**National Standard Reference Data Series**—Provides quantitative data on the physical and chemical properties of materials, compiled from the world's literature and critically evaluated. Developed under a worldwide program coordinated by NBS under the authority of the National Standard Data Act (Public Law 90-396).

NOTE: The principal publication outlet for the foregoing data is the Journal of Physical and Chemical Reference Data (JPCRD) published quarterly for NBS by the American Chemical Society (ACS) and the American Institute of Physics (AIP). Subscriptions, reprints, and supplements available from ACS, 1155 Sixteenth St., NW, Washington, DC 20056.

**Building Science Series**—Disseminates technical information developed at the Bureau on building materials, components, systems, and whole structures. The series presents research results, test methods, and performance criteria related to the structural and environmental functions and the durability and safety characteristics of building elements and systems.

**Technical Notes**—Studies or reports which are complete in themselves but restrictive in their treatment of a subject. Analogous to monographs but not so comprehensive in scope or definitive in treatment of the subject area. Often serve as a vehicle for final reports of work performed at NBS under the sponsorship of other government agencies.

**Voluntary Product Standards**—Developed under procedures published by the Department of Commerce in Part 10, Title 15, of the Code of Federal Regulations. The standards establish nationally recognized requirements for products, and provide all concerned interests with a basis for common understanding of the characteristics of the products. NBS administers this program as a supplement to the activities of the private sector standardizing organizations.

**Consumer Information Series**—Practical information, based on NBS research and experience, covering areas of interest to the consumer. Easily understandable language and illustrations provide useful background knowledge for shopping in today's technological marketplace.

*Order the* **above** *NBS publications from: Superintendent of Documents, Government Printing Office, Washington, DC 20402.*

*Order the* **following** *NBS publications—FIPS and NBSIR's—from the National Technical Information Services, Springfield, VA 22161.*

**Federal Information Processing Standards Publications (FIPS PUB)**—Publications in this series collectively constitute the Federal Information Processing Standards Register. The Register serves as the official source of information in the Federal Government regarding standards issued by NBS pursuant to the Federal Property and Administrative Services Act of 1949 as amended, Public Law 89-306 (79 Stat. 1127), and as implemented by Executive Order 11717 (38 FR 12315, dated May 11, 1973) and Part 6 of Title 15 CFR (Code of Federal Regulations).

**NBS Interagency Reports (NBSIR)**—A special series of interim or final reports on work performed by NBS for outside sponsors (both government and non-government). In general, initial distribution is handled by the sponsor; public distribution is by the National Technical Information Services, Springfield, VA 22161, in paper copy or microfiche form.

# BIBLIOGRAPHIC SUBSCRIPTION SERVICES

**The following current-awareness and literature-survey bibliographies are issued periodically by the Bureau:**

**Cryogenic Data Center Current Awareness Service.** A literature survey issued biweekly. Annual subscription: domestic $25; foreign $30.

**Liquefied Natural Gas.** A literature survey issued quarterly. Annual subscription: $20.

**Superconducting Devices and Materials.** A literature survey issued quarterly. Annual subscription: $30. Please send subscription orders and remittances for the preceding bibliographic services to the National Bureau of Standards, Cryogenic Data Center (736) Boulder, CO 80303.

**U.S. DEPARTMENT OF COMMERCE**
**National Bureau of Standards**
Washington, D.C. 20234

OFFICIAL BUSINESS

Penalty for Private Use, $300

POSTAGE AND FEES PAID
U.S. DEPARTMENT OF COMMERCE
COM-215

U.S.MAIL

SPECIAL FOURTH-CLASS RATE
BOOK