U.S. DEPARTMENT OF COMMERCE

TECHNOLOGY ADMINISTRATION

National Institute of Standards and Technology

NAT'L INST OF STAND & TECH R.I.C.
A11104 213176

NIST Technical Note 1406

Fire Safety of Passenger Trains:

A Review of Current Approaches and of New Concepts

Richard D. Peacock
Richard W. Bukowski
Walter W. Jones
Paul A. Reneke
Vytenis Babrauskas
James E. Brown

QC
100
.U5753
#1406
1994

AUTHENTICATED
U.S. GOVERNMENT
INFORMATION
GPO

The National Institute of Standards and Technology was established in 1988 by Congress to "assist industry in the development of technology . . . needed to improve product quality, to modernize manufacturing processes, to ensure product reliability . . . and to facilitate rapid commercialization . . . of products based on new scientific discoveries."

NIST, originally founded as the National Bureau of Standards in 1901, works to strengthen U.S. industry's competitiveness; advance science and engineering; and improve public health, safety, and the environment. One of the agency's basic functions is to develop, maintain, and retain custody of the national standards of measurement, and provide the means and methods for comparing standards used in science, engineering, manufacturing, commerce, industry, and education with the standards adopted or recognized by the Federal Government.

As an agency of the U.S. Commerce Department's Technology Administration, NIST conducts basic and applied research in the physical sciences and engineering and performs related services. The Institute does generic and precompetitive work on new and advanced technologies. NIST's research facilities are located at Gaithersburg, MD 20899, and at Boulder, CO 80303. Major technical operating units and their principal activities are listed below. For more information contact the Public Inquiries Desk, 301-975-3058.

Technology Services
- Manufacturing Technology Centers Program
- Standards Services
- Technology Commercialization
- Measurement Services
- Technology Evaluation and Assessment
- Information Services

Electronics and Electrical Engineering Laboratory
- Microelectronics
- Law Enforcement Standards
- Electricity
- Semiconductor Electronics
- Electromagnetic Fields[1]
- Electromagnetic Technology[1]

Chemical Science and Technology Laboratory
- Biotechnology
- Chemical Engineering[1]
- Chemical Kinetics and Thermodynamics
- Inorganic Analytical Research
- Organic Analytical Research
- Process Measurements
- Surface and Microanalysis Science
- Thermophysics[2]

Physics Laboratory
- Electron and Optical Physics
- Atomic Physics
- Molecular Physics
- Radiometric Physics
- Quantum Metrology
- Ionizing Radiation
- Time and Frequency[1]
- Quantum Physics[1]

Manufacturing Engineering Laboratory
- Precision Engineering
- Automated Production Technology
- Robot Systems
- Factory Automation
- Fabrication Technology

Materials Science and Engineering Laboratory
- Intelligent Processing of Materials
- Ceramics
- Materials Reliability[1]
- Polymers
- Metallurgy
- Reactor Radiation

Building and Fire Research Laboratory
- Structures
- Building Materials
- Building Environment
- Fire Science and Engineering
- Fire Measurement and Research

Computer Systems Laboratory
- Information Systems Engineering
- Systems and Software Technology
- Computer Security
- Systems and Network Architecture
- Advanced Systems

Computing and Applied Mathematics Laboratory
- Applied and Computational Mathematics[2]
- Statistical Engineering[2]
- Scientific Computing Environments[2]
- Computer Services[2]
- Computer Systems and Communications[2]
- Information Systems

---

[1] At Boulder, CO 80303.
[2] Some elements at Boulder, CO 80303.

NIST Technical Note 1406

Fire Safety of Passenger Trains:

A Review of Current Approaches and of New Concepts

Richard D. Peacock
Richard W. Bukowski
Walter W. Jones
Paul A. Reneke
Vytenis Babrauskas
James E. Brown

Building and Fire Research Laboratory
Gaithersburg, MD 20899

January 1994

U.S. Department of Commerce
Ronald H. Brown, *Secretary*
Technology Adminstration
Mary L. Good, *Under Secretary for Technology*
National Institute of Standards and Technology
Arati Prabhakar, *Director*

National Institute of Standards
and Technology
Technical Note 1406
Natl. Inst. Stand. Technol.
Tech. Note 1406
170 pages (Jan. 1994)
CODEN: NTNOEF

U.S. Government Printing Office
Washington: 1994

For sale by the Superintendent of
Documents
U.S. Government Printing Office
Washington, DC 20402

Bibliographic Information

Abstract

Recent advances in passenger guided ground transportation, fire test methods, and hazard analysis necessitate re-examination of requirements for fire safety. Several studies have indicated nearly random ability of current tests to predict actual fire behavior. Fire safety in any application, including transportation, requires a multi-faceted approach. The effects of vehicle design, material selection, detection and suppression systems, and emergency egress and their interaction, on the overall fire safety of the passenger trains are all considered.

All of the technologies being considered for U.S. operation have evolved under different types of regulations and standards. This report presents a detailed comparison of the fire safety approaches used in the United States, France, and Germany. The strengths and weaknesses of current methods for measuring the fire performance of rail transportation systems are evaluated. An optimum systems approach to fire safety which addresses typical passenger train fire scenarios is analyzed.

A rationale is presented for the direction in which most fire science-oriented organizations in the world are clearly headed – the use of fire hazard and fire risk assessment methods supported by *measurement* methods based on heat release rate (HRR).

Keywords

fire research; heat release rate; large scale fire tests; passenger vehicles; railroads; smoke; small scale fire tests; standards; systems approach; test methods;

Ordering

Copies of this document are available from the Superintendent of Documents, U.S. Government Printing Office, Washington, DC 20402

Acknowledgments

This report was sponsored by the U.S. Department of Transportation (US DOT), Federal Railroad Administration (FRA), Office of Research and Development, Arne J. Bang, Program Manager. Ms. Stephanie Markos of the Volpe National Transportation Systems Center, US DOT (Volpe Center) provided overall project direction.

The authors wish to acknowledge the support of the staff of the FRA and the Volpe Center and their detailed technical review of the report.

TABLE OF CONTENTS

1. Introduction 1
- 1.1 Background 2
- 1.2 Purpose and Scope 4
- 1.3 Approach 5
- 1.4 Passenger Train Equipment 5
- 1.5 Literature Surveys 6

2. Overview of Systems Approaches to Fire Safety 11
- 2.1 United States 12
- 2.2 France 12
- 2.3 Germany 13
- 2.4 Other Countries 13
- 2.5 Reaction-to-fire Tests 14
- 2.6 Fire Hazard Analysis 15
- 2.7 Summary of Overall System Fire Safety 15

3. U.S. Requirements 17
- 3.1 Motive Power Unit, Passenger Car, and Trainway Design 17
- 3.2 Restaurant Cars 19
- 3.3 Material Controls 20
  - 3.3.1 Flame Spread – ASTM E 162 AND ASTM D 3675 20
  - 3.3.2 The Smoke Density Chamber – ASTM E 662 23
  - 3.3.3 Floor Covering – ASTM E-648 23
  - 3.3.4 Fire Endurance Tests – ASTM E 119 26
  - 3.3.5 Bench-scale "Bunsen Burner" Tests 27
  - 3.3.6 Wire and Cable Flammability and Smoke Emission 27
    - 3.3.6.1 Small Burner Tests 27
    - 3.3.6.2 The IEEE 383 Test 29
    - 3.3.6.3 FMRC Tests 30
  - 3.3.7 Toxicity Requirements 31
- 3.4 Communication Systems 31
- 3.5 Detection and Suppression Systems 33
- 3.6 Emergency Egress and Access 33

4. Requirements of Other Countries 35
- 4.1 European Countries 35
  - 4.1.1 Motive Power Unit and Passenger Car Design 35
  - 4.1.2 Restaurant Cars 37
  - 4.1.3 Material Controls 37
  - 4.1.4 Fire Detection and Suppression Systems 38
  - 4.1.5 Emergency Egress 39
- 4.2 French Requirements 39

4.2.1 Motive Power Unit and Passenger Car Design 39
4.2.2 Restaurant Cars 39
4.2.3 Material Controls 39
4.2.3.1 Radiant Panel Fire Performance Test for Rigid Materials – NF P 92501 42
4.2.3.2 Radiant Panel Fire Performance Test for Flexible Materials – NF P 92502 and NF P 92503 45
4.2.3.3 Rate of Flame Spread – NF P 92504 47
4.2.3.4 Test for Dripping – NF P 92505 47
4.2.3.5 Radiant Panel Test for Floor Coverings – NF P 92506 47
4.2.3.6 Calibration of the Heat of Combustion (Calorific Potential) of a Material – NF P 92510 51
4.2.3.7 Oxygen Index Tests for Small Samples - NF T 51071, NF G 07128 and NF C 20455 51
4.2.3.8 Test for Cables and Electrical Continuity - NF C 32070 51
4.2.3.9 Toxicity Requirements 53
4.2.4 Communication Systems 54
4.2.5 Fire Detection and Suppression Systems 54
4.2.6 Emergency Egress and Access 55
4.3 German Requirements 55
4.3.1 Motive Power Unit and Passenger Car Design 56
4.3.2 Restaurant Cars 57
4.3.3 Material Controls 57
4.3.3.1 Combustibility – DIN 4102 58
4.3.3.2 Combustibility – DS 899/35 V and H 63
4.3.3.3 Heat Release Rate – FAR part 25.853 Appendix F part IV (14 CFR Part 25) 63
4.3.3.4 Heat Conduction – FAR 25.853 Appendix F Part III (14 CFR Part 25) 65
4.3.3.5 Ignition Resistance – UIC Code 564-2 65
4.3.3.6 Fire Endurance Tests – DIN 4102 Parts 2 and 4 65
4.3.3.7 ATS 1000.001 Section 7.2 65
4.3.3.8 Toxicity Requirements 68
4.3.4 Communication Systems 68
4.3.5 Fire Detection and Suppression Systems 68
4.3.6 Emergency Egress and Access 70
4.4 Future Developments in Europe 70

5. Comparison of Current Approaches 73
5.1 Motive Power Unit and Passenger Car Design 73
5.2 Material Controls 73
5.2.1 Purpose of Bench-Scale Test Methods 79
5.2.2 Noncombustible Materials 80
5.2.3 Flammability 81
5.2.4 Fire Endurance 82
5.2.5 Smoke Emission 82

5.2.6 Toxic Potency 83
5.2.6.1 Development of Toxic Potency Measurement Methods 84
5.2.6.2 Toxic Potency Measurement for Fire Hazard Analysis 86
5.3 Communication Systems 89
5.4 Fire Detection and Suppression Systems 89
5.5 Emergency Egress and Access 90
5.6 Real-scale and Assembly Testing 90
5.7 Fire Hazard Assessment 92

6. Systems Approach to Fire Safety 95
6.1 Motive Power Unit, Passenger Car, and Trainway Design 95
6.2 Material Controls 96
6.2.1 Evaluation of Current Requirements 97
6.2.1.1 Ignition and Flame Spread (ASTM E 162, NF P 92501) 97
6.2.1.2 Smoke Emission 98
6.2.1.3 Fire Endurance Tests 100
6.2.1.4 Bunsen burner Ignition Tests 100
6.2.2 Material Performance Based on Heat Release Rate Testing 101
6.2.3 Bench-Scale Heat Release Measurement 103
6.2.4 Correlation Methods for Prediction 107
6.2.4.1 Upholstered Seating 108
6.2.4.2 Interior Linings 109
6.2.4.3 Smoke Emission 112
6.2.5 Composite Materials 113
6.2.5.1 Types of Composites 114
6.2.5.2 Ignition and Time Dependent Heat Release Rate 115
6.2.5.3 Predictive Aspects of Heat Release Rates 118
6.2.5.4 Implications for Use of Composite Materials 120
6.2.6 Tests Needed 120
6.2.7 What is Lacking in Material Testing? 121
6.3 Fire Detection Systems 121
6.4 Alarm and Communication Systems 123
6.5 Suppression Systems 125
6.6 Emergency Egress and Access 126

7. Scenario Based Modeling of Fire Hazards 127
7.1 Mathematical Modeling of Fires 128
7.2 Hazard Modeling 129
7.2.1 The Need for Quantitative Hazard Analysis 129
7.2.2 Overall Approach of Hazard Assessment 131
7.3 Application of the Methodology to Passenger Trains 132
7.3.1 Scenarios 133
7.3.1.1 Interior Fires 133
7.3.1.2 Exterior Fires 134
7.3.2 Analysis of the Scenarios 136
7.4 What Is Lacking In Hazard Analysis? 137

8. Conclusions 139
8.1 Equivalence of U.S. and Foreign Requirements 139
8.2 Findings 140
8.3 Fire Hazard Analysis 142
8.4 Future Directions 143

9. References 145

FIGURES AND TABLES

Figure 1. The ASTM E-162 Test for Surface Flammability of Materials Using a Radiant Heat Energy Source. 22
Figure 2. The ASTM E-662 Test for Specific Optical Density of Smoke Generated by Solid Materials. 24
Figure 3 The ASTM E-648 Flooring Radiant Panel Test. 25
Figure 4. The FAR-25.853 Test, a Vertical Bunsen-burner Test. 28
Figure 5. The Closed-System Cup Furnace Toxicity Method. 32
Figure 6. The NF P 92501 Epiradiateur Flammability Test. 44
Figure 7. The NF P 92503 Burner Test for Flexible Materials. 46
Figure 8. The NF P 92504 Bunsen Burner Test for Small-ignition Source Flammability. 48
Figure 9. The NF P 92505 Dripping Test. 49
Figure 10. The NF P 92506 Floor Covering Test. 50
Figure 11. The NF T 51071 Oxygen Index Test for Small Samples. 52
Figure 12. The DIN 4102 Fire Shaft or "Brandschacht" test. 60
Figure 13. The DIN 4102 Furnace Test. 62
Figure 14. The OSU Calorimeter Test. 64
Figure 15. The FAR 25.853 Heat Conduction Test. 66
Figure 16. The UIC 564-2 Ignition Resistance Test. 67
Figure 17. The DIN 53436 Toxicity Furnace Test. 69
Figure 18. General View of the Radiant Toxicity Apparatus. 87
Figure 19. General View of the Cone Calorimeter (ASTM E-1354, ISO 5660). 104
Figure 20. The ISO 9705 (NORDTEST NT 025) Room Fire Test. 111
Figure 21. Time to Ignition as a Function of Irradiance for Two Different Composite Panels. 116
Figure 22. Example of the Effect of Irradiance on the Heat Release Rate for a Composite Material. 117
Figure 23. Zone Model Terms. 130
Figure 24. Minimum Ignition Source Energies for Various Seat Assemblies. 135

Table 1. Major Fire Safety-related Documents Reviewed 8
Table 2. U.S. Flammability and Smoke Emission Requirements for Passenger Guided Ground Transportation Vehicles 21
Table 3. Material Flammability Requirements of European Countries 36
Table 4. Sample Acceptance Criteria for Material Tested in the French Standards. 42
Table 5. French Requirements for Fire Resistance and Toxicity in Rail Vehicles 43
Table 6. Classification for rigid or flexible materials greater than 5 mm in thickness using Test NF P 92501 45
Table 7. Classification for Flexible Materials ≤ 5 mm in Thickness Using Test NF P 92503 47
Table 8. Correspondence between Oxygen Index and Reaction Classes 51
Table 9. Classification Scheme for Conductors and Electrical Cables 53
Table 10. German Reguirements for Flammability and Smoke Emission 59

Table 11. Summary of Major Test Methods Used for Passenger Train Material Selection in the United States, France, and Germany 74
Table 12. A Comparison of U.S., French, and German Material Flammability Requirements 75
Table 13. Proposed classification system for wall/ceiling lining materials tested in the Room/Corner test 110
Table 14. Classification of Fire Performance Based on Heat Release Rate, Ignitability, Propensity to Flashover, and Smoke Emission 113
Table 15. Composite Materials Included in Heat Release Rate Study 114
Table 16. Comparison of Inferred Flammability Indices of Composite Materials 119

Fire Safety of Passenger Trains:
A Review of Current Approaches and of New Concepts

Richard D. Peacock, Richard W. Bukowski, Walter W. Jones,
Paul A. Reneke, Vytenis Babrauskas[1], and James E. Brown

Building and Fire Research Laboratory
National Institute of Standards and Technology

1. Introduction

New alternative technologies have been developed which can be used to increase intercity passenger train operating speeds. These technologies include steel-wheel-on-rail and magnetic levitation (maglev) systems. Fire safety is an area of particular interest for these technologies, as well as for conventional intercity and commuter trains. While the historical fire record has been very good and few serious passenger train fires have occurred, minor incidents could develop into potential life-threatening events.

Recent advances in fire test methods and hazard analysis techniques necessitate re-examination of fire safety requirements for passenger trains. Several studies have indicated almost random ability of current materials tests to predict actual fire behavior. Fire safety in any application, including transportation systems, requires a multi-faceted systems approach. The effects of vehicle design, material selection, detection and suppression systems, and emergency egress and their interaction, on the overall fire safety of the passenger trains are all considered.

All of the technologies currently being considered for U.S. operation are of foreign origin and may employ different equipment and operating procedures from those customarily seen in the United States. In addition, the technologies have evolved under different types of regulations and standards. The Volpe National Transportation Systems Center (Volpe Center) has conducted initial studies of the new high-speed passenger train technologies which identified certain fire safety issues. It was determined that further study was required to explore the U.S. and foreign approaches to fire safety.

This report presents a detailed comparison of the fire safety approaches used in the United States, France, and Germany. The strengths and weaknesses of current methods for measuring the fire performance of rail transportation systems are evaluated. An optimum systems approach to fire safety which addresses typical passenger train fire scenarios is analyzed and recommendations are presented to address the current state-of-the-art in materials testing.

---

[1] Current address: Fire Science and Technology Inc., Damascus, MD 20872

1.1 Background

The Federal Railroad Safety Act of 1970, Section 202(e), gives the Federal Railroad Administration (FRA) jurisdiction over "all forms of non-highway ground transportation that run on rails or electromagnetic guideways, including ... any high-speed ground transportation systems that connect metropolitan areas ...". This authority thus covers conventional rail as well as new technology applications.

To address U.S. passenger train fire safety, the FRA has issued guidelines for the flammability and smoke emission characteristics for materials used in passenger rail equipment [1]. These evolved from earlier versions [2], [3]. The guidelines are similar to Federal Transit Administration (FTA) recommendations for rail transit vehicles [4], but also include vehicle material tests and performance criteria for components such as mattresses and wall coverings. While the primary focus of these guidelines is material fire performance, the importance of vehicle design is recognized through requirements for separation between passengers and fire sources and acceptance criteria for structural fire testing based upon the time required for passenger evacuation from the train.

Amtrak has issued "Specification for Flammability, Smoke Emissions and Toxicity," Specification No. 352, for its passenger cars [5]. This specification describes test requirements and criteria for flammability and smoke emission which are nearly identical to the FRA guidelines (with the addition of toxicity testing). In addition, the Amtrak specification requires that several other factors, (e.g., quantity of material present, configuration and proximity to other combustibles) be considered in combination with the material test data to develop a fire-hazard assessment for use in selecting materials on the basis of function, safety, and cost. Moreover, the Amtrak specification requires testing of an assembly to provide information about the actual behavior of materials in a "real world" vehicle fire.

The majority of the flame spread and smoke emission tests and performance criteria for vehicle interior materials contained in the National Fire Protection Association "Standard for Fixed Guideway Transit Systems" (NFPA 130) [6], intended for application to rail transit vehicles, are identical to the FRA guidelines and the Amtrak specification. However, NFPA also includes fire protection requirements in several other vehicle areas, such as ventilation, electrical fire safety, etc. In addition, NFPA 130 includes requirements for trainways (i.e., right-of-ways) and stations, as part of a systems approach. A fire risk assessment is required to evaluate smoke emission, ease of ignition, and the rate of heat and smoke release, in addition to fire propagation resistance. NFPA 130 indicates that a hazard load analysis and the use of materials with appropriate properties are two means which can be used to perform the fire risk assessment. NFPA 130 encourages the use of tests which evaluate materials in certain subassemblies and the use of full-scale tests. Finally, NFPA 130 provides requirements for stations, trainways, vehicle storage and maintenance areas, emergency procedures, and communications.

Interest in improving the fire safety of passenger train vehicles is not new. From 1906 to 1928, the Pennsylvania Railroad undertook an ambitious program to replace their wooden passenger car fleet with all-steel passenger train cars due to a concern for safety and fire prevention [7]. A total of 5501 all-steel passenger train cars including baggage, mail, express, and dining cars were involved, representing an investment of approximately one hundred million dollars. Emphasis on passenger comfort and aesthetic appeal have led to the increased use of synthetic materials [8]. Plastic use in rail car interiors started in the early 1950's [9], [10]. Over the years, concern has been raised over the flammability and impact on fire hazard of these materials in the end-use configuration, even though they may be acceptable in bench-scale[2] tests [11].

While nonmetallic materials have traditionally been used in seat cushioning and upholstery, their use in other system components such as coverings for floors, walls and ceilings; window glazing and window or door gasketing; and nonstructural storage compartments have increased the fire load within the vehicles. In addition to the flammability characteristics of the interior furnishing materials, the size and design of the vehicle are all factors in determining the ultimate hazard to passengers and crew as a result of a fire.

In addition to interior furnishing materials, limited ventilation and difficult egress compound the potential fire hazard in intercity and commuter rail cars. Ventilation in a typical car is typically 17,000 l/min (600 cfm) of fresh makeup air. Exhaust is through leakage and, thus during evacuation, through the same exits used by escaping passengers.

Specific requirements for the flammability of materials in rail transportation vehicles first appeared in 1966 [9]. These rail car specifications dictated "flame tests" for seat foam materials before the material use would be approved for the original Metroliner passenger rail cars. The National Academy of Sciences [12] provided general guidelines in 1979 for the use of flammable materials in rail transit vehicles. These guidelines recommended the use of only those polymeric materials that by testing and comparison, are judged to be the most fire retardant and that have the lowest smoke and toxic gas emission rates. Further, they suggested these be used sparingly, consistent with comfort and serviceability.

Fires in passenger trains are rare, but can lead to serious disasters. The 1983 Amtrak fire in Gibson, California led to two passenger deaths, two serious passenger injuries, and numerous passenger and crew being treated for smoke inhalation [13]. Damage was estimated at $1,190,300. The NTSB report identified several areas of concern as a result of its investigation of the fire. These included the role of materials in fire involvement, fire detection, interior arrangement (i.e., narrow hallways, door operation), intra-train communications equipment, crew training in ventilation control, emergency

---

[2] In this report, the term *bench-scale* is used to describe a class of tests that typically measure some property (or properties) of a small sample of a material. "Small-scale" and "laboratory-scale" are also used in the literature.

lighting, rescue personnel emergency access, and passenger evacuation. Although the materials used for the interior trim of the cars in the train were considered to be the best products available at that time for fire retardancy and flammability, the use of certain materials was recognized as a potentially dangerous situation requiring correction. The FRA fire safety guidelines were issued to address the flammable material concerns raised by the NTSB. Many of the other issues mentioned by the NTSB have been addressed by subsequent passenger car specifications. The recommendations of the NTSB report also provide a starting point for this report by pointing out important areas of concern in fire safety of passenger guided ground transportation vehicles. These areas are reflected in the organization of the report chapters discussing current approaches to fire safety.

Fire-related losses in rail transportation are not limited to vehicles. The recent King's Cross fire in the London subway system [14], [15] demonstrated the need for fire safety considerations in the design of railway stations. The fire involved an escalator shaft, ticket hall, along with passageways leading to the streets and mainline concourse above. As a result of the fire, there were 30 fatalities and numerous injuries. New British regulations governing sub-surface railway stations are under development as a result of the fire.

1.2 Purpose and Scope

This report provides the results of an independent review and detailed comparison to evaluate the compatibility of the U.S., French, and German approaches to fire protection. In addition, the current state-of-the-art in materials testing, as well as other fire engineering system components, such as extinguishment and emergency egress, are reviewed. This effort will provide the FRA and passenger train system operators with additional information to ensure an equivalent level or better level of passenger and train crew safety, while taking advantage of new approaches to improving the fire safety performance of U.S. passenger trains.

The FRA is responsible for preparing Rules of Particular Applicability containing safety requirements with which new applications and demonstration projects must comply. Two new passenger train technologies under consideration include the French Train à Grande Vitesse (TGV) proposed for Texas and the German Transrapid maglev system proposed for Florida. An area of concern is the fire safety of the passenger vehicles to be used in these services and other proposed passenger train technologies. Three areas of fire safety technology development are involved:

- Of particular interest in this review are new technology applications for passenger trains. Fire safety of the passenger vehicles to be used in these systems and other new passenger train systems is achieved through differing requirements between countries principal in developing these technologies. New generation materials, such as composite materials, may be used in new system designs.

- Developments in fire testing of materials over the last decade may be able to provide better measures of fire performance with lower testing burden on material producers.

- Significant progress has been made in the development of computer fire models with the ability to produce accurate predictions of the outcome of building fires. Since these models can account for the mitigating effects of most fire protection strategies, they can fulfill the need for an objective evaluation of overall system performance against established goals.

Advances in these areas necessitate re-examination of the U.S. approach to fire safety in light of these new technologies. In addition, the evaluation of the comparability and potential equivalence of U.S. and foreign fire safety requirements can also assist FRA and passenger train system operator decision-makers in formulating appropriate fire safety requirements in light of these new technologies.

1.3 Approach

In this study, the overall fire protection performance of passenger train systems is reviewed and evaluated. Two primary areas of focus are addressed:

- Bench-, medium-, and large-scale test methods which are in wide use in the United States and abroad are reviewed. For comparison, tests conducted in actual end-use configuration (defined in this report as "real-scale tests") are surveyed.

- Other fire safety techniques and strategies are reviewed. It is important to understand that fire safety depends on more than just proper material selection. Vehicle design, fire detection and suppression systems, emergency evacuation, and system operation personnel training can be equally important.

This report identifies the similarities and differences of the approaches used in the United States, Germany, and France to evaluate whether they describe equivalent approaches and methodologies. The direction in which the National Institute of Standards and Technology (NIST), and most other fire science-oriented organizations in the world are clearly headed is presented – the use of fire hazard and fire risk assessment methods supported by *measurement* methods based on heat release rate (HRR).

1.4 Passenger Train Equipment

A wide variety of materials and designs are used in typical conventional U.S. railroad passenger equipment. Passenger cars are constructed primarily of stainless steel; newer designs incorporate aluminum components. Interior trim and furnishing depends upon the type of passenger service (commuter versus intercity) and type of car (coaches, lounges, sleeper cars, etc.). The construction

and furnishing of a conventional passenger train car is more complex than the standard spartan furnishing provided by a rail transit vehicle, due to the typically longer distances traveled. Appropriate fire safety design must reflect this added complexity.

Intercity passenger cars (coaches, lounges, food service cars, and sleeping cars) and many commuter rail cars are equipped with upholstered seats. These seats consist of fabric-covered foam (with a design that converts to beds in sleeping cars). Curtains or draperies are installed over windows and doors. Intercity passenger cars typically have interior walls, ceilings, and floors covered with carpeting; commuter cars are more spartan – high capacity is important. Partitions between bedrooms and between bedrooms and hallways are constructed of plymetal panels, which are covered by either melamine, glass-fiber reinforced plastic, or carpet. The majority of car floors are also constructed of plymetal panels. Glass fiber insulation is used in the floors, sidewalls, end walls and air ducts in the cars. Multi-level cars also have stairways which allow passengers to move from one level to another. In addition, cooking equipment, heat and air conditioning systems, AC and DC power equipment, and lavatories are included in various passenger car designs.

Within the Northeast Corridor, the majority of trains use electric locomotives with motive power supplied by an overhead catenary transmission system. On other routes, train motive power is provided by head-end diesel-electric locomotives. Turbo trains operated by Amtrak in New York State include two motive power units located at each end of the train. On these trains, all motive power units and coaches are semi-permanently coupled train sets that are not altered between trips.

1.5 Literature Surveys

Preliminary to starting work on this study, prior reviews of fire safety requirements which may be applied to passenger rail transportation systems were reviewed. Rakaczky [16] reviewed the available literature on fire and flammability characteristics of materials which could be used in passenger rail transportation vehicles. With the exception of some documents published by the FTA, limited information was available for materials that related specifically to passenger rail vehicles. Much of the literature reviewed related more to other transportation applications (primarily aircraft) than to rail transportation. Key in the Rakaczky study, however, was a prevailing concern of many researchers of the ability of bench-scale tests in predicting real-scale burning behavior. Hathaway and Litant [17] provided an assessment of the state-of-the-art of fire safety efforts in transportation systems in 1979. Without annotation, they provide a bibliography of literature from 1970 to 1979. Peacock and Braun [18] studied the fire behavior of Amtrak passenger cars for the FRA. They provide a review of material testing requirements and a comparison of bench- and real-scale testing of vehicle interior materials. Recently, Schirmer Engineering Corporation studied the fire safety of railroad tunnels and stations in New York City, including the impact of passenger train flammability requirements on the fire load in tunnels and stations [19].

Of particular interest are two safety-related studies recently completed for the FRA. The first study by the Volpe Center presents the results of a review to determine the suitability of German safety requirements for application to maglev train systems proposed for U.S. application [20].at report provides a starting point for the review of the systems approach to fire safety design discussed in chapter 2 of this report. The Volpe Center report raises a number of questions related to maglev system fire safety design. Part of the intent of this report is to address these questions. A second study compares international safety requirements which may be applicable to maglev systems proposed for U.S. operations [21] and provides an overview of numerous areas of system design which may be applicable to maglev system design, including fire safety. Although the discussion of fire testing issues and impact of differing test methodologies is minimal, the report provides a detailed review of the overall transportation system and the interrelationships among safety-related components of the system.

In addition to specific documents provided by the Volpe Center, other published literature relating to rail transportation systems was surveyed. Table 1 identifies the major fire safety-related documents reviewed in this report. Additional documents are identified throughout the report. The search strategy included the FIREDOC database maintained at NIST, plus the databases of the Engineering Index and the National Technical Information Service. This survey identified over 340 references to transportation system fire safety. Ancillary studies on toxic hazard [22], [23] and electrical wire and cable [24] provided additional information and references for this study. In addition to the flammability characteristics of electrical wire and cable, the design of the electrical system plays an important role in minimzing fire risk. The Arthur D. Little report [21] details design features for electrical fire safety protection in addition to material and smoke emission characteristics. A key resource on international efforts in flammability testing of plastics is the "International Plastics Flammability Handbook [25]." This single resource provides a comprehensive review of test methods in over 20 countries and includes sections specific to rail transportation.

In addition, many of the assumptions and procedures used in materials testing are assessed in light of the general principles of fire protection engineering; this portion of the study, however, was not accompanied by a separate literature search.

Table 1. Major Fire Safety-related Documents Reviewed

FEDERAL RAILROAD ADMINISTRATION

- Rail Passenger Equipment; Reissuance of Guidelines for Selecting Materials to Improve their Fire Safety Characteristics
- Code of Federal Regulations, Title 49, Transportation, Parts 200-240 (49 CFR)

NATIONAL RAILROAD PASSENGER CORPORATION (AMTRAK)

- Specification for Flammability, Smoke Emissions and Toxicity, Specification No. 352
- Specification for High Performance Wire and Cable Used on Amtrak Passenger Vehicles, Specification No. 323
- Smoke Alarm System for Passenger Cars, Specification No. 307
- Dining Car Food Service Equipment, Specification No. 350
- Viewliner Designer Criteria Specification, Specification No. 376
- Emergency Evacuation from Amtrak Trains, NRPC 1910
- Life Safety Study and Computer Modeling for New York City Railroad Tunnels and Pennsylvania Station (Schirmer Engineering Corporation)

NATIONAL FIRE PROTECTION ASSOCIATION (NFPA)

- NFPA 130, Fixed Guideway Transit Systems (Standard)
- NFPA 96, Installation of Equipment for the Removal of Make and Grease-Laden Vapors from Commercial Cooking Equipment

FRA/VOLPE CENTER/CONTRACTOR REPORTS

- Safety of High Speed Magnetic Levitation Transportation Systems: Preliminary Safety Review of the Transrapid Maglev System
- Safety of High Speed Magnetic Levitation Transportation Systems: German High-Speed Maglev Train Safety Requirements - Potential for Application in the United States
- Safety of High Speed Magnetic Levitation Transportation Systems: Comparison of U.S. and Foreign Safety Requirements for Application to U.S. Maglev Systems
- An Assessment of High-Speed Rail Safety Issues and Research Needs

FRANCE

- French Railway Standards (AFNOR):
  - NF F 16-101, Railway Rolling Stock Fire Behavior-Choice of Materials
  - NF F 16-102, Railway Rolling Stock Fire Behavior-Choice of Materials, Application to Electrical Equipment
  - NF F 16-103, Railway Rolling Stock Fire Protection and Firefighting-Design Arrangements
- Technical Dossier for Intervention in the Case of a Train Accident French Railway Company (SNCF)

Table 1. (continued) Major Fire Safety-related Documents Reviewed

GERMANY

- DIN 5510, Preventive Fire Protection in Railway Vehicles
  - Part 1, Levels of Protection, Fire Preventive Measures and Certification
  - Part 2 (draft), Combusition Behavior and Fire Side Effects of Materials and Parts
  - Part 4, Structural Design of the Vehicles
  - Part 5, Electrical Operating Means
  - Part 6, Auxiliary Measures, Function of the Emergency Brake Equipment, Information Systems, Fire Alarm Systems, Fire Fighting Equipment
- Railroad Construction and Traffic Regulations (EBO)
- High-Speed Maglev Trains Safety Requirements (RW-MSB)
- Bostrab, Directive Concerning the Construction and Operation of Streetcars
- Guidelines for Preventive Fire Protection for Passenger Vehicles in Accordance with Bostrab

BRITAIN

- BS 6853, British Standard Code of Practice for Fire Precautions in the Design and Construction of Railway Passenger Rolling Stock
- Investigation into the King's Cross Tunnel Fire (November 17, 1987)

INTERNATIONAL UNION OF RAILWAYS (UIC)

- UIC Code 560 OR: Doors, Entrance Platforms, Windows, Steps, Handles and Handrails of Coaches and Luggage Vans.
- UIC Code 564-1 OR: Coaches; Windows Made from Safety Glass.
- UIC Code 564-2, OR: Regulations Relating to Fire Protection and Fire Fighting Measures in Passenger Carrying Railway Vehicles or Assimilated Vehicles used on International Services
- UIC Code 642, OR: Special Provision Concerning Fire Precautions and Fire Fighting Measures on Motive power Units and Driving Trailers in International Traffic.

AVIATION

- Code of Federal Regulations, Title 14, Aeronautics and Space, Part 25, Airworthiness Standards: Transport Category Airplanes Federal Aviation Administration
- ATS 1000.001: Fire-Smoke-Toxicity (FST) Test Specification, Technical Specification Airbus Industrie

2. Overview of Systems Approaches to Fire Safety

Fire safety for any application, including transportation, requires a multi-faceted approach. The underlying goals embodied in the guidelines and standards of various countries provide for public safety from fires. Litant [26] recognized the need for a systems approach to fire safety in rail transportation including vehicle design, material selection, detection, and suppression as components of the system approach.

The **goals for fire protection** are universal; only the means chosen to achieve them vary. These goals can be simply stated in the following list [27]:

- **Prevent the fire or retard its growth and spread.**
  - Control fire properties of combustible items.
  - Provide adequate compartmentation.
  - Provide for suppression of the fire.
- **Protect occupants from the fire effects.**
  - Provide timely notification of the emergency.
  - Protect escape routes.
  - Provide areas of refuge where necessary and possible.
- **Minimize the impact of fire.**
  - Provide separation by tenant, occupancy, or maximum area.
  - Maintain the structural integrity of property.
  - Provide for continued operation of shared properties.
- **Support fire service operations.**
  - Provide for identification of fire location.
  - Provide reliable communication with areas of refuge.
  - Provide for fire department access, control, communication, and water supply.

To **prevent the fire or retard its growth and spread**, material and product performance testing is used to set limits on the fire properties of items which represent the major fuels in the system. Vehicle design and compartmentation requirements along with limits on the rate of fire growth perform the function of limiting fire spread. Extinguishing systems, manual or automatic, can also be used to control the fire. **To protect occupants from the fire effects**, detection and alarm systems notify the passengers to take appropriate actions. These systems also notify designated employees or the public fire service to begin fire fighting operations and to assist occupants. Training of personnel to react appropriately to fire incidents and system design to facilitate passenger evacuation can play an equally important part in timely passenger evacuation and fire suppression. Structural fire endurance testing of floors and partitions provide compartmentation of the fire and are intended to **minimize the impact of the fire**. Overall system design, personnel training, extinguishing equipment, and communication systems **support fire service operations**.

This chapter presents the overall approaches to passenger train fire safety in light of these overall goals. In the sections that follow, these goals are highlighted in italics to indicate the link between the requirements and these goals. It will be seen that although material selection plays an important role, additional areas are addressed to varying degrees in each of the approaches which are important to the overall fire safety of the passenger train system.

2.1 United States

The majority of fire safety requirements for U.S. passenger trains consist of material fire performance test criteria designed to *prevent the fire or retard its growth and spread.* Based on test methods which evaluate fire properties of individual materials, the FRA guidelines and similar requirements for other rail applications form a prescriptive set of design specifications for material selection.

The U.S. approach is not limited to material fire performance, however. The FRA guidelines and other requirements include specifications for fire endurance sufficient to allow passenger evacuation. The FRA currently requires that each passenger car have at least four emergency windows. Both of these requirements provide measures to *protect occupants from the fire effects.* In addition, the fire endurance requirements *minimize the impact of fire.* NFPA 130 includes requirements for fire detection, emergency communication, emergency lighting, emergency egress, fire extinguishers, and shut-down of the vehicle ventilation system. The NFPA standard also contains requirements for stations, trainways, vehicle storage and maintenance areas, emergency procedures, and communications which *support fire service operations.* Fire safe design for electrical wire and cable are addressed in both Amtrak and NFPA documents.

2.2 France

The goal of the French approach to *preventing the fire or retarding its growth and spread* is similar to its U.S. counterparts, in that materials used in each application area are treated individually. However, the French specification is a complex system based on several classification indices, each derived from several test results. The French standards then classify the materials on the perceived risk to occupants. The intent is to provide indices which are indicative of the risk to occupants from individual materials. However, risk results from the entire system's reaction to a fire event. Risk inherent in individual materials may be offset by other design features. Thus, risk should be viewed for the overall system, not just individual components of the system.

In addition to material fire performance requirements, the French approach includes prescriptive requirements for fire detection in engine compartments and fire extinguishers. Fire alarm and emergency egress (via door and window design) provisions *protect occupants from the fire effects.* The French documents reviewed include only requirements for compartmentation via fire barriers in ceiling spaces to *minimize the impact of fire.* Minimal requirements are included for fire endurance.

2.3 Germany

The German Federal Railways "Railroad Construction and Traffic Regulations" (EBO) provides general safety and operational procedures for railroad operation in Germany [28]. No information is included covering fire safety. The primary German standards covering rail car fire protection are included in DIN 5510, "Preventive Railway Fire Protection in Railway Vehicles," published by the German Standards Institute (DIN) [29]. These standards are utilized for multiple rail applications from streetcars (in the requirements of the Bostrab [30]) to magnetic levitation systems (in "High-Speed Maglev Trains: German Safety Requirements" (RW MSB) [31]). The German requirements address fire protection with more emphasis on efforts to *minimize the impact of fire* than in the U.S. or France. For streetcars, the older requirements of the Bostrab include design, material selection, and particularly operating procedures. The more recently developed RW MSB carries more stringent requirements and assigns class four fire protection requirements to maglev trains in accordance with DIN 5510. Class four is the highest level of protection and is applied to trains that cannot be evacuated everywhere along the track (such as tunnels or elevated sections). The RW MSB requires that the system must be designed to maintain a safe hover long enough for the vehicle to reach a safe evacuation point – with vehicle, structural integrity, and electrical system design requirements to provide such capability. Fire endurance requirements are extensive in DIN 5510 (and thus the RW MSB), with application to all structural components, including floors, walls, and ceilings.

DIN 5510 requires that the supporting structures, fittings, and linings of passenger cars be selected and arranged to prevent or delay danger to passengers, crew, and rescue personnel caused by the development, propagation, and spread of fire. A series of tests to evaluate material performance are used to prove compliance with these requirements. These measures provide a means to *prevent the fire or retard its growth and spread.*

Additional requirements for electrical wire and cable, batteries, lighting, heating, air conditioning shutdown, automatic fire alarms, and fire extinguishers *protect occupants from the fire effects* and *support fire service operations.* DIN 5510 and Chapter 12 of the RW MSB also include requirements for emergency egress and emergency rescue planning.

2.4 Other Countries

The International Union of Railways Code, "Regulations relating to fire protection and fire-fighting measures in passenger-carrying railway vehicles or assimilated vehicles used on international services" (UIC 564-2) [32], covers passenger-carrying railway vehicle design for international service in Europe. There is considerable overlap between this code and the French standards. UIC Code 564-2 includes as a general guideline for vehicle design: "the coach design and interior fittings must above all prevent the spread of fire." To meet this goal, a set of material test methods is included similar in intent and implementation to the French standards, covering vehicle design (to reduce potential

ignition), compartmentation (to prevent spread of fire from one vehicle to another), electrical systems, fire detection in engine compartments, fire extinguishers, fire alarms, and emergency egress (via door and window design).

Young [33] discusses the British standard, "British Standard Code of Practice for Fire Precautions in the Design and Construction of Railway Passenger Rolling Stock" (BS 6853) [34], which defines two categories of vehicle use:

- Trains which require higher resistance to fire (underground, sleeping cars, unmanned operating trains), and

- All other vehicles.

The British standard includes provision for material selection, compartmentation (particularly in sleeping cars), electrical equipment, cooking equipment, emergency lighting, and emergency egress.

Requirements in other countries take similar approaches to implementing the fire safety goals discussed above. The Mass Rapid Transit system in Singapore [35] was constructed in the 1980's following NFPA 130 for the station, trainway, and vehicle design. Compartmentation in stations and vehicles, ventilation systems, emergency egress provisions, and vehicle design were all considered in the overall design of the system. In Japan [36]. a combination of bench-scale material screening tests and real-scale proof-testing is used to evaluate overall fire protection levels for passenger rail cars.

2.5 Reaction-to-fire Tests

During the 1940's and the 1950's, flammability (or "reaction-to-fire") tests were developed on a purely *ad hoc* basis. Results were typically expressed by arbitrary 0 to 100 scales or by such rating terms as "self-extinguishing." In 1973, the U.S. Federal Trade Commission saw such practices as misleading and sued a number of plastics manufacturers and also the American Society for Testing and Materials (ASTM) [37]. A consent agreement was eventually reached whereby a Bunsen burner test, ASTM D-1692, was dropped, and a caveat was inserted into other ASTM tests, in an attempt to avoid their future misuse. It is noteworthy that the situation in other countries is similar to the U.S. experience. More than ten years ago, Emmons obtained the results of flammability tests on a number of materials, when tested according to various national, bench-scale flammability standards [38]. He found that the relationship between the test results and real-scale fire behavior according to the different standards was almost completely random. Östman and Nussbaum [39] very recently re-examined this issue; the situation appears to have improved only slightly. The reason is that the new knowledge gained in fire physics and engineering over the last 10 or 15 years has generally not yet been reflected in many of the required tests which are on the books.

A great number of national test methods exist for fire testing. For example, one such compilation which included only the ASTM fire test methods [40] tabulates some 77 tests. Based on this large number of tests, people new to the fire testing area might conclude that fire test methods are highly-refined, well-tuned to specific areas, and that they only have to find the applicable area. The reality is very different. Many of the currently published methods were developed 40 years ago, did not rely on any understanding of the physics of the situation being represented, and present their results as arbitrary numbers. Meanwhile, during the last decade or so, sound, physics-based design methods have come to be available to the practicing engineer. These methods include both simpler, closed-form calculational formulas and complete fire hazard analysis[3] methodologies.

2.6 Fire Hazard Analysis

Fire hazard analyses are gaining worldwide acceptance as means to establish the level of regulation needed to assure safe products without imposing unwarranted restrictions. In their efforts to harmonize regulations among the European nations, the EC Commission established the early goal that all fire tests selected should be consistent with fire hazard analysis procedures and provide the data needed by such techniques [41]. In Japan, the Building Research Institute of the Ministry of Construction (which promulgates the national building code and serves as the arbiter of its equivalency clauses) has formally established a fire hazard analysis procedure as one means of demonstrating the equivalency of new products and materials to their code requirements [42]. Australia is developing a similar system through its Warren Centre for Advanced Engineering (University of Sydney) and CSIRO Division of Building, Construction and Engineering [43]. Sweden, Norway, Denmark, Germany, France, and Singapore all have established the precedent of accepting new products, materials, or designs based on fire hazard or fire risk analysis calculations.

Such computer fire models require information which has not been available from traditional test methods. In some other cases, the requisite data may have been available from existing tests, but had unacceptable errors associated with them. Methods to address these needs have either recently been developed or, are at least under active development.

2.7 Summary of Overall System Fire Safety

The trend toward a systems approach to fire safety is evident in nearly every country of the world. This trend is driven largely by the realization that the interactions among various system components

---

[3] *Fire hazard:* the seriousness of the exposure conditions which threaten the physical well-being of the occupant. The hazard may come from various sources, for example, smoke inhalation, direct flame burn, injuries due to trauma (e.g., ceiling collapse), high temperatures, or the inability to escape due to lack of visibility or the presence of acid gases which affect the eyes.

can create mitigating or extenuating conditions not evident when examining the performance of the individual component. Further, it is sometimes more cost effective to compensate for the performance shortfalls of one component rather than to attempt to correct it. The traditional method of evaluating overall system safety by conducting real-scale tests is effective, but costly. Less costly (and less effective) is to test real-scale assemblies of major compoents of a system (for example, an entire seat assembly). In recent years, the evolution of predictive models has resulted in the development of fire hazard and fire risk evaluations which attempt to synthesize the interactions of the complete system into a computational model.

This systems approach is evident in all of the fire safety requirements reviewed for this report. It is demonstrated by requirements for assembly testing in addition to the traditional component testing with bench-scale apparatus. In addition, fire hazard analyses are utilized to evaluate the fire load including the quantity and configuration of the combustible materials present.

Alarm systems and extinguishers, along with provision for emergency shutdown of ventilation systems are being specified in order to extend the time available for safe egress. Provision of emergency exits along with emergency plans for rescue by external forces provide an additional level of safety in case of failure of other provisions to limit the size of the fire incident.

Disastrous fires are never the result of a single failure, but rather reflect a series of events which combine to produce the fire. Fire safety requires a similar multi-level approach in which all of the components of system safety are treated in a systematic manner, such that a potential failure is countered by a safety feature. While material performance testing is important, it provides only one facet of the overall approach to effective fire safety for the traveling public.

3. U.S. Requirements

Within the general context of the system safety goals discussed in the previous chapter, the U.S. fire safety requirements address specific criteria deemed necessary to meet these goals. Individual, prescriptive requirements are included for a range of components of the overall system. These requirements are summarized in the following sections. Current European requirements will be summarized in Chapter 4, and their similar requirements will be compared in Chapter 5.

There is considerable overlap of requirements for rail transportation vehicles. For example, the FRA, Amtrak, FTA, and NFPA contain similar requirements covering the fire safety of materials used in passenger vehicles. The German RW MSB requirements include test methods used by the U.S. Federal Aviation Administration. A report to the Office of the Secretary of Transportation recognized the potential for similar requirements in multiple modes of transportation [44]. The review in the report included fire protection and control, material controls, engine components, structural components, procedures, and buildings. Numerous areas were identified for potential cooperation and common requirements between different transportation modes. To date, the overlap is primarily limited to material controls. Similar requirements in multiple rail transportation sectors are evident in the review below.

3.1 Motive Power Unit, Passenger Car, and Trainway Design

The FRA regulations applicable to passenger train safety design are contained in the Code of Federal Regulations, Title 49, Transportation (49 CFR) [45]. The FRA regulations reviewed as part of the report relate to safety concerns that are primarily technology-specific and were adopted as the result of years of conventional rail operating experience. The regulations cover numerous areas for safety. However, there are a number of regulations, pertaining to vehicle and electircal system design, evacuation, and general emergency procedures, that have a direct impact on fire safety.

The FRA regulations applicable to locomotives are contained 49 CFR, Part 229, "Railroad Locomotive Safety Standards" [46]. Passenger rail systems in the Northeast Corridor are electric and some integrate the power systems into the passenger-carrying vehicles. Combustible materials in power systems are generally limited to electrical insulating materials which are present in limited quantities and are difficult to ignite and when ignited burn slowly with little total heat released. The principal fire hazards are related to arcing or short circuits in the electrical systems, overloaded/overheating equipment (especially resister banks used for speed control and dynamic braking), and combustible gases produced by batteries. The primary protection methods to address these hazards are electrical overload protection, some detection and suppression systems monitoring specific equipment, ventilation of battery compartments, and fire barriers separating the equipment spaces from occupied areas. A potential fire hazard which appears to be unaddressed is that of hydraulic fluids.

Most such fluids are essentially noncombustible under most conditions. Some can burn when misted or sprayed under pressure onto a hot surface above its ignition temperature.

Separate motive power units may also operate by electricity; either from external sources (often supplied from overhead catenary transmission systems) or, in the case of diesel-electric locomotives, generated on board by engine/generator units. The potential fire hazards of the all-electric locomotive differ little from those systems which collect power from "third rails." For these systems, fire safety is primarily related to the design of the electrical system. For diesel systems, the addition of significant quantities of fuel in tanks presents additional potential hazards which should be addressed. Diesel engines have hot manifolds which may be hot enough to ignite sprayed hydraulic fluids and are certainly hot enough to ignite leaking diesel fuel. Thus, such engine compartments may be provided with automatic detection and suppression systems to avoid the potential that a potentially damaging fire go unnoticed.

49 CFR, Parts 229.93-229.97 includes requirements for internal combustion engines and associated fuel tanks. A fuel cut-off device on the fuel tank that can operate automatically as well as manually is required. The fuel tanks are also required to be properly vented and grounded against electrical discharge. Amtrak's "Specification for High Speed Lightweight Dual Power Locomotives for Amtrak Systemwide Passenger Service, AMD-125DP," Specification Number 581 [47] and "Specification for Diesel Locomotives for Amtrak Systemwide Passenger Service, AMD-103DC, AMD-103AC, and AMD 125,"Specification Number EED-004 [48] apply to High Speed Lightweight Dual Power Locomotives and Diesel Locomotives, respectively. The only safety features discussed involve the fuel systems that must be:

> "Protected against road and debris damage by approved means. Particular attention to be given to both ends and the leading 1/3 of the bottom area and the trailing 1/3 of the bottom area. Also, an approved means to prevent leaks due to external damage is to be provided."

Further, at least three emergency fuel cutoff stations are required: on both sides externally near fill pipes and accessible from the ground, and within the operator's cab near the governor or start switch.

Other U.S. requirements for vehicle and trainway design discuss various aspects of the design of the vehicle and trainway, including track (especially elevated or underground sections), stations, and tunnels. The concerns revolve around overall system safety and the degree to which the design facilitates emergency evacuation. For transit vehicles, NFPA 130 requires that the design provide compartmentation for equipment external to the passenger compartment. Where it is necessary to install equipment in transit vehicles, suitable shields or enclosures must be provided to isolate the equipment from the passenger compartment. Vehicles must have sufficient structural fire resistance to prevent penetration of an external fire long enough to permit evacuation. Special consideration is given to structural flooring which will be discussed in Section 3.3. Control of fires in compartments is also managed by fire resistant materials as discussed in Section 3.3.

For trainways, NFPA 130 specifies that the location of emergency communication and control equipment be marked by blue lights. Additional emergency lighting requirements are also included. Special attention is given to separation of potentially hazardous areas, to fuel loads in tunnels and underwater tubes, and to ventilation systems in such areas requiring redundant power and controls. Burnett [49] points out the importance of careful design and operation of such ventilation systems. In several fires, ventilation operations were not coordinated effectively with fire service personnel and when fire fighters arrived to combat the fire, they were driven back when smoke was forced in the wrong direction.

According to NFPA 130, stations are required to meet fire safety requirements typical of other buildings where the public gathers (i.e., assembly occupancies). Exceptions are made for power substations, electrical control rooms, trash rooms, train control rooms, and separations of public and non-public areas. These areas are required to have a fire separation of two hours endurance except in the case of power substations which require three hour separations. Also, specifications of ventilation systems for exit pathways are to be designed to keep temperatures below 60 °C (140 °F).

3.2 Restaurant Cars

Typical equipment in restaurant vehicles for intercity passenger service includes some unique aspects related to fire safety. Electrical equipment is included in such cars, along with appliances for food storage, preparation, and disposal. Since electrical safety requirements are covered in detail in section 3.3.6, and typical restaurant car construction involves few combustible surfaces, the primary concerns for fire safety relate to appliance design, and particularly vapor removal equipment.

For U.S. passenger train service, two primary resources are available which describe requirements for dining car food service equipment: Amtrak Specification No. 350, "Specification for Dining Car Food Service Equipment," [50] and Amtrak Specification 576, "Technical Specification, Viewliner Intercity Passenger Car" [51]. Both specifications contain similar, though not identical requirements for appliance and vapor removal equipment.

Requirements for appliances are carefully detailed in both Amtrak specifications. Criteria for microwave and convection ovens, hot plates, refrigeration equipment, hot food storage equipment, and other appliances are included. Typically, such appliances must be tested and listed by a nationally recognized testing laboratory such as Underwriters Laboratories.

Of particular interest are the specifications for cooking vapor removal equipment. In Specification No. 350, "a grease trap type ventilator shall be installed in all areas where there will be excessive accumulation of smoke and/or grease." Specification No. 576 includes a further requirement that "filters shall not be permitted." Both specifications include design details on the construction of the ventilator including construction materials (primarily stainless steel), and thermostatic controls to

control fans and damper in the event of a fire. Access for inspection must be included in the design. Only specification No. 350 includes an operating temperature for activation of 177 °C (350 °F).

To judge the adequacy of such a design, the NFPA standard "NFPA 96, Standard for Installation of Equipment for the Removal of Smoke and Grease-Laden Vapors from Commercial Cooking Equipment" was also reviewed [52]. The NFPA requirements include specification of construction materials (steel or stainless steel are appropriate), and thermostatic controls to control damper operation. A maximum temperature rating of 141 °C (286 °F) is specified for the activation device. The NFPA standard allows grease removal devices to include "listed grease filters, baffles, or other approved grease removal devices for use with commercial cooking equipment." "Mesh filters shall not be used." The Amtrak requirement in Specification No. 576 precluding filters addresses this prohibition.

3.3 Material Controls

The FRA flammability and smoke emission guidelines for passenger train cars [3] are included as Appendix A and summarized in Table 2. The Amtrak [5] and NFPA [6] requirements are nearly identical to the FRA guidelines, with differences noted in the table and discussed in the sections covering the individual test methods. The requirements are based in large part on two bench-scale test methods – ASTM E 162, "Surface Flammability of Materials Using a Radiant Energy Source" [53] (with a variant, ASTM E 3675 for cellular materials [54]) and ASTM E 662, "Specific Optical Density of Smoke Generated by Solid Materials" [55]. Several additional standards are specified for individual material applications. With one exception, the test methods are bench-scale tests designed to study aspects of a material's fire behavior in a fixed configuration and exposure. All of these requirements are reviewed and discussed below.

3.3.1 Flame Spread – ASTM E 162 AND ASTM D 3675

The ASTM E 162 , illustrated in Figure 1, was developed by the National Bureau of Standards (NBS – former name of NIST) in 1955 [56], [53]. A nearly identical method, ASTM D-3675 is used for cellular materials such as seat cushioning. This method measures flame spread and rate of energy release under a varying radiant flux from about 40 to 3 kW/m^2. The flame spread factor, F_s, calculated from the flame spread velocity, and the heat evolution factor, Q, determined by measuring the temperature in an exhaust duct, are combined to yield a flammability index, I_s, defined as:

$$I_s = F_s \times Q \ .$$

The higher the index, the greater the flammability. The test instrument is calibrated to an arbitrary scale with red oak assigned an I_s of 100.

Table 2. U.S. Flammability and Smoke Emission Requirements for Passenger Rail Vehicles

		Flammability		Smoke Emission	
Category	Function of Material	Test Procedure	Performance Criteria	Test Procedure	Performance Criteria
Passenger seats, sleeping and dining car components	Cushions, mattresses	ASTM D-3675	$I_s \leq 25$	ASTM E-662	D_s (1.5) ≤ 100; D_s (4.0) ≤ 175 [a]
	Seat frames, mattress frames	ASTM E-162	$I_s \leq 35$	ASTM E-662	D_s (1.5) ≤ 100; D_s (4.0) ≤ 200
	Seat and toilet shroud, food trays	ASTM E-162	$I_s \leq 35$	ASTM E-662	D_s (1.5) ≤ 100; D_s (4.0) ≤ 200
	Seat upholstery, mattress ticking and covers, curtains	FAR 25.853 (vertical)	Flame time ≤ 10 s Burn length ≤ 6 in	ASTM E-662	D_s (4.0) ≤ 250 coated D_s (4.0) ≤ 100 uncoated
Panels	Wall, ceiling, partition, tables and shelves, windscreen, HVAC ducting	ASTM E-162	$I_s \leq 35$	ASTM E-662	D_s (1.5) ≤ 100; D_s (4.0) ≤ 200
		ASTM E-119	as appropriate[b]	ASTM E-662	
	Window, light diffuser	ASTM E-162	$I_s \leq 100$	ASTM E-662	
Flooring	Structural	ASTM E-119	nominal evacuation time, at least 15 min	ASTM E-662	D_s (1.5) ≤ 100; D_s (4.0) ≤ 200
	Covering	ASTM E-648	C.R.F. ≥ 5 kW/m^2 [c]	ASTM E-662	
		ASTM E-162 [d]	$I_s \leq 25$	ASTM E-662	
Insulation	Thermal, acoustic	ASTM E-162	$I_s \leq 25$ [e]	ASTM E-662	D_s (4.0) ≤ 100
Elastomers	Window gaskets, door nosing, diaphragms, roof mat	ASTM C-542	Pass	ASTM E-662	D_s (1.5) ≤ 100; D_s (4.0) ≤ 200
Exterior Plastic Components	End cap roof housings	ASTM E-162	$I_s \leq 35$	ASTM E-662	D_s (1.5) ≤ 100; D_s (4.0) ≤ 200
Component Box Covers	Interior, exterior boxes	ASTM E-162	$I_s \leq 35$	ASTM E-662	D_s (1.5) ≤ 100; D_s (4.0) ≤ 200

a UMTA and NFPA 130 requirement is Ds (1.5) ≤ 100; Ds (4.0) ≤ 200
b "May use test criteria for floors or criteria appropriate to the physical locations and magnitude of the major ignition, energy, or fuel loading sources".
c Amtrak requirement is C.R.F. ≥ 6 kW/m^2
d NFPA 130 only
e Amtrak requirement is $I_s \leq 35$

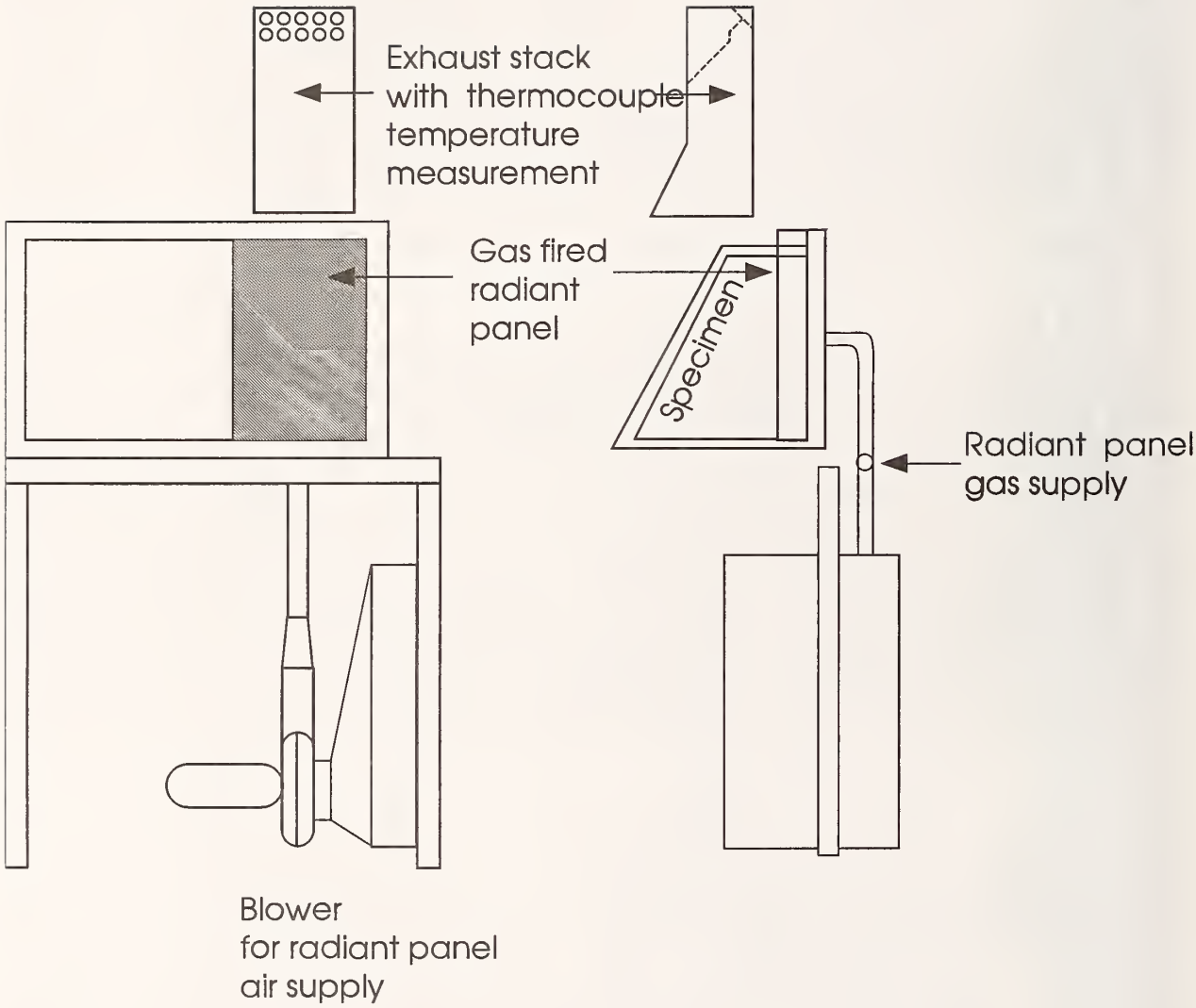

Figure 1. The ASTM E-162 Test for Surface Flammability of Materials Using a Radiant Heat Energy Source.

The criteria for this test method range from $I_s \leq 25$ for cushions, mattresses, floor coverings and insulation to $I_s \leq 100$ for window and light diffuser panels. With exceptions, these values are comparable to those typically found in building construction. An I_s of 75 is considered acceptable for the walls and ceilings of corridors in commercial buildings [57], [58], but a value of less than 25 is commonly required in local building codes for corridor linings in institutional buildings. The criteria for window and light diffuser panels of $I_s \leq 100$ is less restrictive than that for wall panels even though the exposure during a fire is identical. Small differences in the criteria such as the requirement of $I_s \leq 25$ for insulation in the FRA and FTA guidelines and $I_s \leq 35$ in the Amtrak specification would have little effect on fire safety. These differences are probably driven by desired product acceptability rather than by a desire for different levels of fire safety. However, there is no generally accepted level of performance based on this test method since it is not a prescriptive standard.

3.3.2 The Smoke Density Chamber – ASTM E 662

The Smoke Density Chamber (ASTM E 662) [55], is used widely in testing of transportation-related materials. Shown in Figure 2, it measures smoke generation from small, solid specimens exposed to a radiant flux level of 25 kW/m^2 in a flaming (piloted ignition) or non-flaming mode. The smoke produced by the burning specimen in the chamber is measured by a light source – photometer combination. The attenuation of the light beam by the smoke is a measure of the optical density or "quantity of smoke" that a material will generate under the given conditions of the test. Two measures are typically reported. D_s is an instantaneous measure of the optical density at a particular instant in time. The maximum optical density, D_m, is used primarily in ranking the relative smoke production of a material and in identifying likely sources of severe smoke production. The criteria for this test method are typically D_s at 1½ min ≤ 100 and D_s at 4 min ≤ 200. Small differences in criteria such as D_s at 4 min ≤ 175 for cushions and mattresses contained in the FRA guidelines would appear to have little effect on fire safety. Like the small differences in requirements for ASTM E 162, the differences are likely driven by perceived product acceptability rather than real differences in fire safety. Other criteria including the omission of a requirement at 1½ min for HVAC ducting are likely due to the inability of an otherwise acceptable product to meet the criteria.

3.3.3 Floor Covering – ASTM E-648

The Flooring Radiant Panel test or "Standard Test Method for Critical Radiant Flux of Floor Covering Systems Using a Radiant Heat Energy Source" (ASTM E 648), exposes a specimen placed horizontally to a radiant energy source that varies across a 1 m length from a maximum of 11 kW/m^2 down to 1 kW/m^2 [59]. After ignition by a small line burner at the high energy end, the distance at which the burning floor material self-extinguishes is determined. This point defines the critical radiant flux (CRF) necessary to support continued flame spread. The higher the CRF, the better is the fire performance of the floor covering.

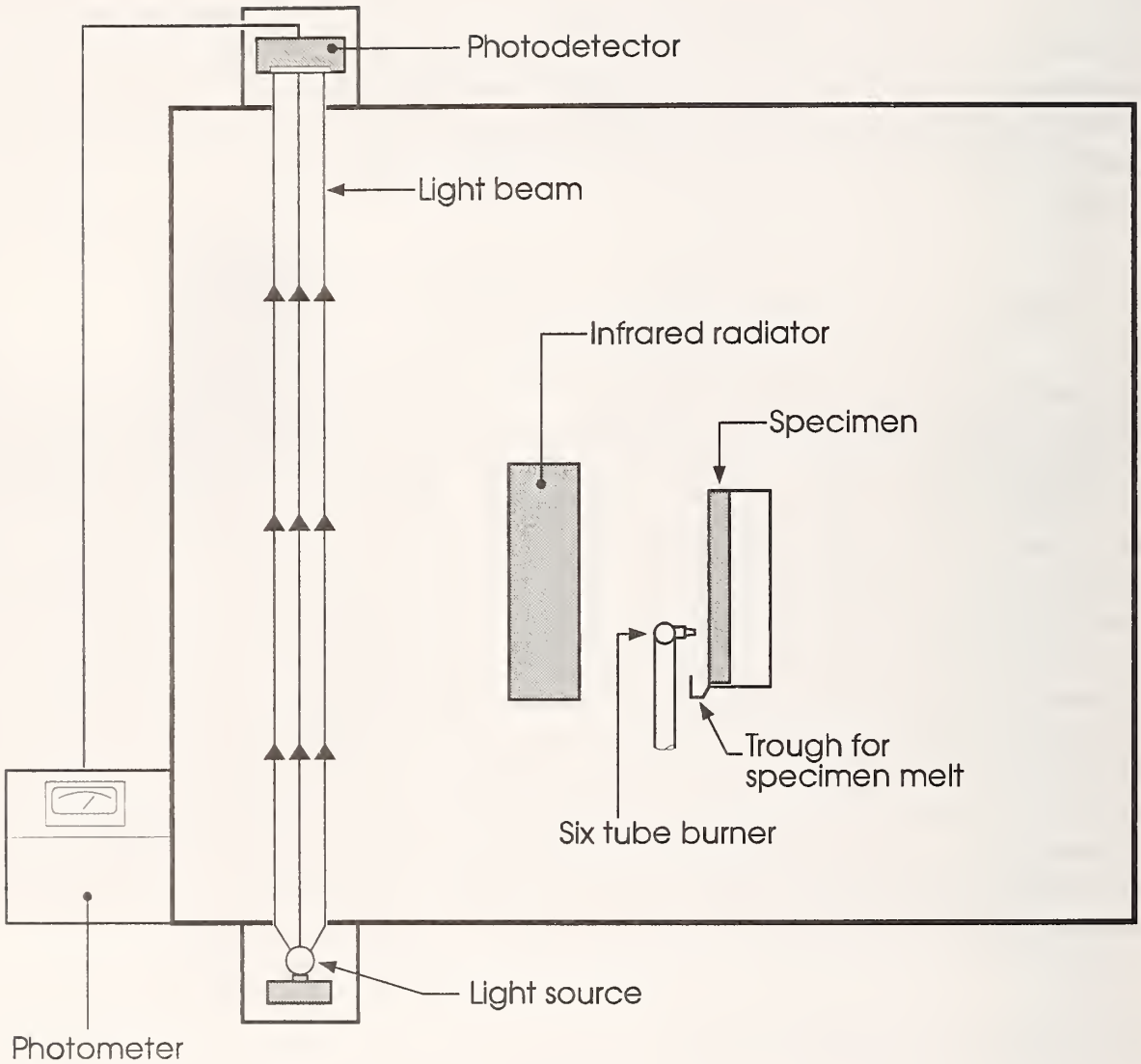

Figure 2. The ASTM E-662 Test for Specific Optical Density of Smoke Generated by Solid Materials.

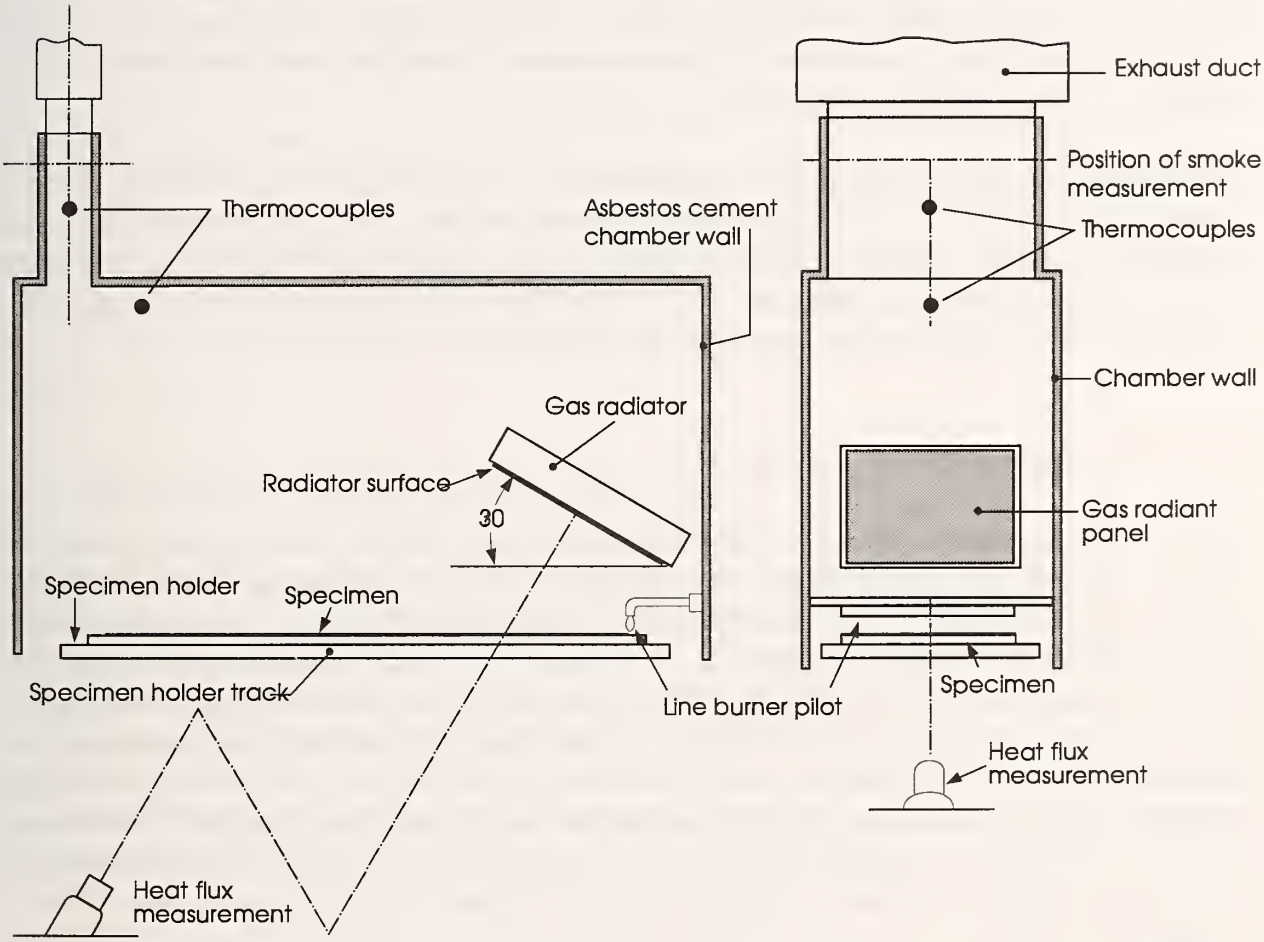

Figure 3 The ASTM E-648 Flooring Radiant Panel Test.

Lawson [60] recently reviewed the development, precision, and appropriate use of the Flooring Radiant Panel. With exceptions, he notes that the precision of the test method is considered equivalent to other fire test methods and has generally reduced losses with fires involving carpeting, where the flooring materials are classified by this test method. Carpeting taken from several large fatal fires in which the carpeting was determined to be the means of fire spread was found to have very low CRF's when tested according to this method – less than 1 kW/m^2 [61]. The best performing floor covering would have CRF's greater than 11 kW/m^2. An acceptance criterion of 4.5 kW/m^2 for egressways in non-sprinklered public occupancies is currently in use [62], [63]. The limit for rail transit vehicles of 5 kW/m^2 cited in NFPA 130 is a somewhat more stringent criterion. It is important to note that these test criteria essentially limit the carpeting such that it will not be the first item ignited. For fully involved fires, fluxes in excess of 20 kW/m^2 can be developed. In these extremes, carpeting may become involved.

In transportation vehicles, carpeting is also routinely used for wall and ceiling covering. For such applications, the results of the horizontally oriented Flooring Radiant Panel test would have little meaning. The additional requirement to test floor covering materials under ASTM E 162 is included to address vertically oriented applications. In the U.S., the acceptance criterion for carpeting is identical to other wall and ceiling coverings and is discussed in section 3.3.1.

3.3.4 Fire Endurance Tests – ASTM E 119

Standard test methods for determining the resistance of floor, partitions, and walls to sustained fire exposure have been available since 1903 [64], [65]. The test method specified in the FRA guidelines, ASTM E 119 – "Fire Tests of Building Construction and Materials," has been widely used for determining the structural integrity of construction for a wide variety of applications [66]. While numerous minor changes have been made in the last 80 years, the time-temperature curve, the basic test apparatus, and some of the criteria have remained unchanged since its introduction as a standard test method, then numbered C19, in 1918 [67]. The complete construction, stressed with weights or hydraulic jacks to simulate the mechanical loads of actual use, is subjected to heating in a furnace with a prescribed temperature-time curve. Measurement of temperature, heat transmission, and structural integrity are used to judge acceptability. Typical test criteria which cause failure of an assembly include:

- Failure to support load.
- Temperature increase on the unexposed surface 139 °C (250 °F) above ambient.
- Transmission of heat or flame sufficient to ignite cotton waste.
- Excess temperature (as specified) on structural steel members.
- Failure under high-pressure fire hose streams (for walls and partitions).

3.3.5 Bench-scale "Bunsen Burner" Tests

Bench-scale Bunsen burner type tests, wherein a sample of a material is exposed to a small flame from an alcohol or gas burner has been frequently used and misused to test the flammability of materials since the 1930's [68]. During the 1950's and 1960's. there was an increased reliance on testing the flammability of materials by means of Bunsen burner type tests. This dependence has decreased in recent years following action by the Federal Trade Commission. In passenger guided ground transportation, the primary use of these types of tests is in the Federal Aviation Regulation FAR-25.853, Appendix F (Figure 4). This standard, used in the current context to assess the acceptability of seat upholstery, mattress ticking and covers, and curtains, defines both a test procedure and acceptance criteria for small-scale fire performance of compartment interior materials used in transport category airplanes [69]. It is based on Federal Test Method Standard No. 191, Method 5903 [70]. The test procedure is a vertical test with a 3.9 cm (1.5 in) flame applied either for 12 s or for 60 s (determined by the end-use of the material) to the lower edge of a 5 cm (2 in) wide, 30.5 cm (12 in) long specimen. The test records the flame time, burn length, and flaming time of dripping material. For elastomers (defined in the FRA guidelines as window gaskets, door nosing, diaphragms, and roof mat), a similar test, ASTM C-542, "Standard Specification for Lock Strip Gaskets," is used. The test consists of a 46 cm (18 in) long specimen suspended over a Bunsen burner flame for 15 min.

3.3.6 Wire and Cable Flammability and Smoke Emission

The Amtrak specification No. 323 for "High Performance Wire and Cable Used on Amtrak Passenger Vehicles" provides a set of requirements for the physical and flammability properties of wire and cable used in passenger train vehicles. The flammability requirements specify a bench-scale small-burner test, the VL-1 specification in Underwriters' Laboratories test 44 with a maximum afterburn after each flame application no greater than 3 s. In addition, the Institute of Electrical and Electronics Engineers (IEEE) 383 test and the Smoke Density Chamber (ASTM E 662) are specified in the requirements. NFPA 130 specifies similar requirements. Small burner tests are specified for control and other low-voltage wire and cable. Power cables must meet the requirements of the IEEE 383 test.

The Smoke Density Chamber is discussed in section 3.3.2 and will not be addressed further here. Babrauskas, et. al. [71] and Hirschler [72] have recently reviewed worldwide requirements for wire and cable applications. These papers provide a basis for the following review applicable to passenger guided ground transportation systems.

3.3.6.1 Small Burner Tests

To understand the limitations of small burner tests for wire and cable, its use in appliances, as opposed to vehicles must be considered. Electric appliances can contain motors, heaters, trans-

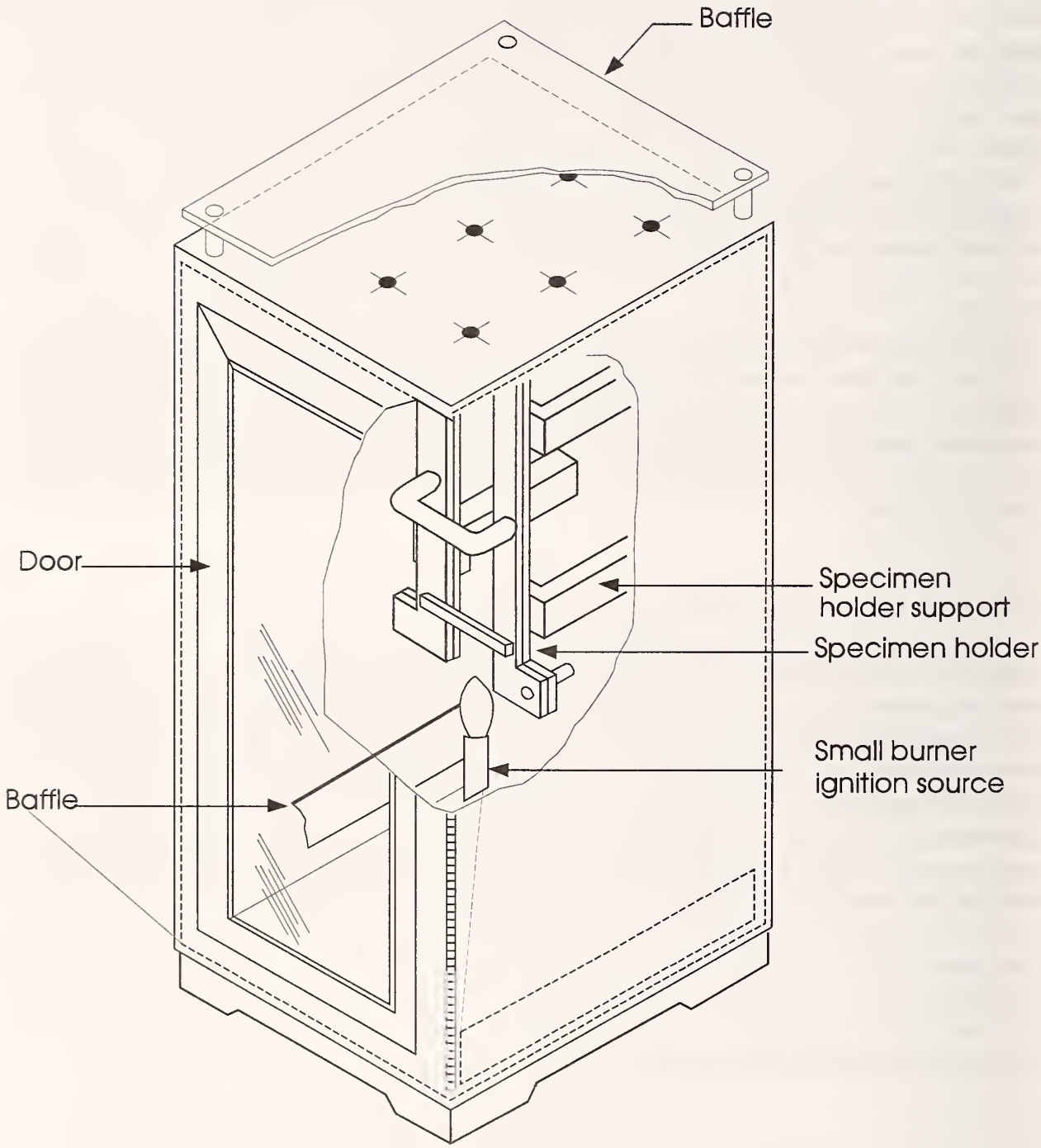

Figure 4. The FAR-25.853 Test, a Vertical Bunsen-burner Test.

formers, and other components which can overheat or possibly ignite. Within an appliance, however, the wiring is usually not run in metallic sheathing, but is rather exposed to the interior of the device. Thus, there is potential for ignition or rapid burning. A research study on the general question of flammability of plastics used inside appliances was conducted by Underwriters Laboratories (UL) in 1964 [73].

An example of the early "flame" tests for wires is ASTM D 470, "Standard Methods of Testing Crosslinked Insulations and Jackets for Wire and Cable" for braided wire insulations and jackets [74]. This test specifies a Tirrill burner fed with illuminating gas.[4] A 254 mm long horizontal test specimen is used in this test; observation is for extent of flames and for any ignition of surgical cotton placed below the specimen.

The vertical burner test described in ASTM D 2633 [75] provides a larger burner flame and more severe sample orientation . This test was developed in the 1960's and, consequently specifies natural gas, rather than illuminating gas, for the Tirrill burner. A 560 mm long specimen is used, stretched taut vertically. The gas burner is inclined 20° from vertical. Slightly different criteria are used, which include placing a paper tab on the specimen, which must not be more than 25% burned during test. UL Standard 44 (Rubber-Insulated Wires and Cables), UL Standard 62 (Flexible Cord and Fixture Wire) and UL Standard 83 (Thermoplastic-Insulated Wires) specify similar procedures except that the specimen length is only 457 mm. Some additional information on the historical development of the UL tests for wire flammability is given by Gaffney [76], who discusses in detail the "FR-1" version of the vertical small burner test that is used in the UL standards, now known as the VW-1 test.

There have been a number of other, similar tests developed where a single wire is exposed to a small burner flame. These will not all be reviewed here, since the principles are largely redundant to the ones already mentioned. There appears to be general consensus that such tests do an adequate job of providing a baseline safety level for wiring within appliances, in residential uses, in low power applications, and similar situations. Thus, the UL 44 / VL-1 small burner test included in Amtrak Specification No. 323, has limited use in transportation vehicles, where the primary application is in high voltage power cables.

3.3.6.2 The IEEE 383 Test

The above small burner type tests were intended for testing a single wire. During the late 1960's and the early 1970's, some concern arose with cables which might be used on open cable trays or ladders

---

[4] It should be noted here that in current-day America, electricity rather than gas is normally used for illumination. This situation notwithstanding, this specification is included in the ASTM standard test method.

and where no metallic sheathing would be used. Thus, during the 1960's, a significant effort was launched by a number of utilities and related companies to develop a realistic test. McIlveen [77] and DeLucia [78] reviewed some of these efforts. In terms of standardization beyond a single company, the first larger-specimen test suggested for use as a standard method was proposed by IEEE's Working Group on Wire and Cable Systems in 1971 [79]. This resulted in the IEEE standard 383 [80] "IEEE Standard for Type Test of Class 1E Electric Cables, Field Splices, and Connections for Nuclear Power Generating Stations."

To summarize, the features of the IEEE 383 standard, as adopted in 1974, are:

- A vertical metal tray, 0.31 m wide and 2.4 m high;
- A single layer of cable specimens, to be arranged to fill at least the central 0.15 m width of the tray, with a separation of approximately 1/2 the cable diameter between each cable;
- A specified, ribbon-type of gas burner is located with its face 75 mm *behind* and 0.6 m above the bottom of the cable tray;
- The burner is supplied by a propane/compressed air mixture. The actual rate of 21 kW is not mentioned in the standard; instead, air and gas pressures to be monitored at certain places in the gas train are specified, as is a flame temperature of 816 °C, to be measured at 3 mm from the specimen;
- The burner flame is applied to the specimen for 1200 s;
- Three test runs are required;
- The specimen passes if the burn damage is less than the total 2.4 m specimen length.

Several studies have investigated the suitability of the IEEE 383 test. Continuing questions include the control of the test procedure (i.e., inconsistent results between laboratories), appropriateness of the test (is the scale of the test appropriate and do the test results segregate products into hazardous versus non-hazardous), and lack of sufficient validation of the test against real-scale test results.

3.3.6.3 FMRC Tests

Factory Mutual Research Corporation (FMRC) was one of the pioneers in developing laboratory and large-scale methods for heat release rate (HRR) testing. In this section, the test method which FMRC is currently using is discussed. An early variant of this test has been applied to wire and cable used in rail transit systems [81] to provide a relative ranking of a number of wire and cable products.

Much of the FMRC testing is done according to standard engineering principles of making HRR measurements, similar to such testing now conducted at more than a hundred laboratories that contain one type or another of bench-scale HRR apparatus. The test for wire and cable products evolved from a HRR test into a scale model cable test combined with a test measuring a thermal inertia/ignition temperature parameter. Apparatus to perform the scale-model-type test is only available at two other U.S. locations (UL, David Taylor Research Center) and at about a half-dozen European locations (France, Germany and UK). This FMRC standard was published in 1989 as Specification Test Standard - Cable Fire Propagation (Class Number 3972).

Several concerns have been expressed related to this test method [82], [71]. These concerns could be grouped into two areas: (1) the need for the test (i.e., the existence of other tests which provide better indication of performance); and (2) technical problems with the test (i.e., testing with enriched oxygen may not represent the real-scale fire scenario of interest).

3.3.7 Toxicity Requirements

In the United States, the only requirements for toxicity for passenger guided ground transportation are included in Amtrak Specification No. 352. This specification requires that all materials be tested in the closed-system cup furnace smoke toxicity method (see Figure 5) developed at the National Bureau of Standards [83], [84]. In this test, rats are exposed to the decomposition products from a material burned in a cup furnace. The amount of material which, when burned, causes 50 percent of the test animals to die defines the LC_{50} value for the material. In the Amtrak requirement, these LC_{50} values must be reported. The cup furnace is used to decompose materials under two severe conditions, namely, 25 °C above (flaming conditions) and 25 °C below (nonflaming conditions) each material's autoignition temperature. This test method has been supplanted by a newer generation test method known as the Radiant Toxicity Apparatus, discussed in section 5.2.6.2.

3.4 Communication Systems

NFPA 130 addresses various aspects of communication systems. The rapid communication of information to a central location is included. In manually operated vehicles, the train crews must be able to relay information and to receive instructions to both a central location and to passengers. The central location needs to be able to monitor crucial locations and equipment for failures and to provide some manual control of vital emergency equipment. A means for passengers to alert the operator in the event of an emergency is optional at the discretion of the transit authority. In automated vehicles, a means for passengers to communicate with a central supervising station is required.

NFPA 130 also requires systems to support emergency communication in stations including PA systems which can be used for giving necessary information to passengers regarding manual or

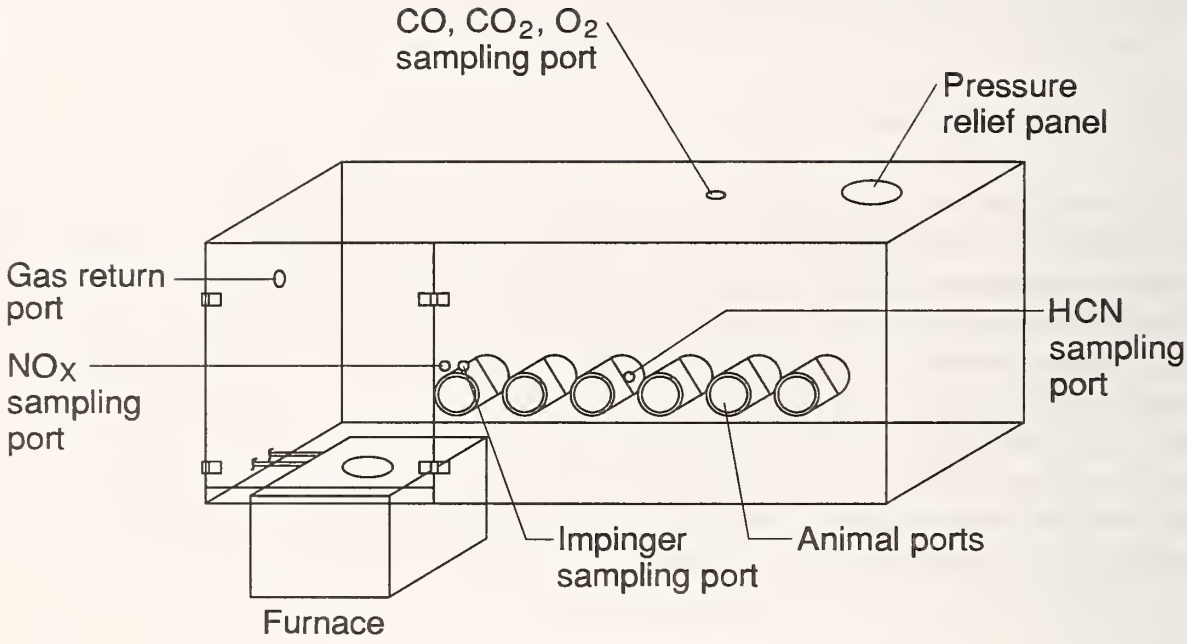

Figure 5. The Closed-System Cup Furnace Toxicity Method.

automatic fire alarms signals. All fire alarms, smoke or heat detectors, and fire extinguishing systems must be equipped to provide local and central control notification of the location of the alarm condition.

3.5 Detection and Suppression Systems

NFPA 130 contains requirements for detection and suppression equipment in trainway power substations and stations, and fire extinguishers on trains. Both are typically required to protect critical systems and hazardous equipment which is capable of creating significant threat to passengers. Trainway or station systems are primarily arranged to report to the central control location. Available research [85], [86] refers specifically to halon extinguishing systems which are no longer acceptable for environmental reasons. This area requires research to identify suitable alternative extinguishing methods; particularly for electrical equipment where water may not be a practical alternative.

3.6 Emergency Egress and Access

The FRA requirements for access and egress, contained in 49 CFR, Part 223.15, require that each passenger car have at least four emergency windows. Egress arrangements are also discussed in detail in NFPA 130, especially for tunnels or other areas which limit the ability to evacuate passengers or limit access by emergency personnel.

A report entitled "Recommended Emergency Preparedness Guidelines for Passenger Trains" [87] prepared for the FRA contains an extensive discussion of emergency planning, personnel training, and train, right-of-way, and wayside facilities equipment in terms of passenger evacuation. This report should be considred the primary reference on emergency egress and preparedness.

4. Requirements of Other Countries

This chapter summarizes current rail fire safety requirements promulgated by several European countries. The same categories of application as previously described will be employed so that, in chapter 5, direct comparisons can be made to the U.S. requirements discussed in chapter 3.

4.1 European Countries

Fire safety requirements of France and Germany, the primary focus of this report, are discussed in detail in sections 4.2 and 4.3. Requirements of other European countries often overlap the French and German requirements, so these will be summarized first. Table 3 summarizes the requirements of several countries [25]. This section will *briefly* review these requirements to highlight any unique directions taken by other European countries that may not be included in the French or German requirements. Of particular interest are the requirements of Great Britain and Poland, since these are completely different from those used in France and Germany.

4.1.1 Motive Power Unit and Passenger Car Design

UIC Code 642 OR "Special provisions concerning fire precautions and fire-fighting measures on motive power units and driving trailers in international traffic" [88], covers vehicle design, material controls, and fire extinguishing requirements for motive power units used in international service in Europe. Fours areas of vehicle design are covered:

- Component parts of the motive power unit which give off heat must be designed and arranged to limit the exposure of adjacent components.
- The fuel system must be designed to minimize fuel spillage and allow easy cleanup in the event of a spill.
- The floor of the vehicle must be design to provide "efficient protection against fire propagation" for a fire originating beneath the floor.
- Electrical cables should be designed and routed to prevent unacceptable temperature rise and provided with protective tubes or conduits where appropriate.

Typical requirements for electrical safety in BS 6853 [34] include properly rated wiring, overcurrent protection, isolation by voltage class, barriers to shield from arcing, and proper ventilation. Of note is a requirement for cable terminations which will not "shake loose."

Table 3. Material Flammability Requirements of European Countries

Product	France	Germany	Great Britain	Norway	Poland	Spain	Sweden	Belgium
Curtains	NF P 92502 NF P 92503 NF P 92507	DIN 4102 FAR 25.853 UIC 564-2 ASTM E-814	BS 5438 3 m cube	NF T 51071 O_2 index > 28%	nr	NF P 92502 NF P 92503 NF P 92507	ISO 1182 (non burning) CAA 8	NF P 92502 NF P 92503 NF P 92507 M1
Seating	NF P 92502 NF P 92503 NF P 92507	DIN 4102 FAR 25.853 UIC 564-2 ASTM E-814	BS 5852 Part II 3 m cube	UIC 654/2	PN 89020 O_2 index > 21%	NF P 92502 NF P 92503 NF P 92507	CAA 8	NF P 92502 NF P 92503 NF P 92507 M1
Floor covering	NF P 92501 NF P 92507	DIN 4102 FAR 25.853 UIC 564-2 ASTM E-814	BS 476 Part 6 and 7 ASTM E-648 3 m cube	nr[a]	PN 89020 O_2 index > 21%	NF P 92501 NF P 92507	NT Fire 007	NF P 92501 NF P 92507 M1
Ceiling panels	NF P 92501 NF P 92504 NF P 92504 NF P 92507	DIN 4102 FAR 25.853 UIC 564-2 ASTM E-814	BS 476 Part 6 and 7 3 m cube	NF T 51071 O_2 index > 35%	PN 89020 O_2 index > 21%	NF P 92501 NF P 92504 NF P 92504 NF P 92507	NT Fire 004 Class II	NF P 92501 NF P 92507 M1
Wall panels	NF P 92501 NF P 92507	DIN 4102 FAR 25.853 UIC 564-2 ASTM E-814	BS 476 Part 6 and 7 3 m cube	NF T 51071 O_2 index > 35%	PN 89020 O_2 index > 21%	NF P 92501 NF P 92507	NT Fire 004 Class 1 DIN 4102 Class B1 NT Fire 001 ISO 1182	NF P 92501 NF P 92507 M1/M2
Light diffusers	NF P 92501 NF P 92507	DIN 4102 FAR 25.853 UIC 564-2 ASTM E-814	BS 476 Part 6 and 7 3 m cube	nr	nr	NF P 92501 NF P 92507	DIN 4102 Class B1 and B2 DS 899/35 B3, Q3, T3	NF P 92501 NF P 92507 M1/M2

a nr – no requirement

4.1.2 Restaurant Cars

The UIC Code 564-2 [32] contains provisions covering cooking equipment. Detailed specifications for design and use of liquified gas in vehicles for cooking and heating are included. No requirements are seen covering exhaust hoods and ducts for cooking equipment or detailed appliance requirements as were apparent in the Amtrak requirements.

BS 6853 [34] contains provisions covering the installation of cooking appliances in railway vehicles. All cooking appliances must be adequately insulated to prevent conduction of heat to adjacent surfaces and equipment. Requirements are included covering the installation, use, and ventilation of gas appliances used for cooking. No specific requirements are included for exhaust hoods and ducts for cooking appliances.

4.1.3 Material Controls

BS 6853 [34] also contains material fire performance requirements for railway rolling stock. Two primary tests for materials are included in the British standard. In addition, the standard references several other standard British "reaction-to-fire" tests for specific materials. A "Flammability temperature index test" determines the temperature at which a small vertical sample of material will exhibit limited burning (burn time $\leq$ 180 s and residual length $\geq$ 50 mm) in a test chimney with 20.9 % oxygen concentration. A "Three metre cube smoke emission test" is effectively a large-scale smoke emission test like the Smoke Density Chamber (ASTM E 662). Two standard fire sources (1000 ml of alcohol and wood charcoal soaked in alcohol) serve as ignition sources. Measurements of smoke density comparable to the Smoke Density Chamber define the acceptance criteria with variations for materials used in different applications. An interesting note in the British standard is a stated intent to replace the "Flammability temperature index test" with a heat release rate test when one becomes available. The British test BS 476 Part 7, Rate of Surface Flame Spread Test, is a rough corollary to the French épiradiateur test, NF P 92501 or the German Brandschacht test, DIN 4102, Part 1. Similarly, the test BS 5438 textile test is a vertically oriented small-burner ignition test similar to the requirements in FAR 25.853.

Of particular interest is the seating test included in "British Standard Methods of test for assessment for the ignitability of upholstered seating by smouldering and flaming ignition sources," BS 5852, Part II [89]. In this test, a full-scale mockup of an upholstered seat is subjected to an ignition source ranging from a cigarette to several sizes of wood cribs. All of the tests involve only test fabrics over standard padding and test padding with standard fabrics. Only BS 5852, Part I includes any testing of actual end-use fabric/padding combinations. It is especially important to emphasize that tests — such as the British BS 5852 — which utilize a full-scale mockup, rather than the end-use article, are for engineering purposes equivalent to bench-scale tests, and not to full-scale tests. This is because

aspects of frame materials, shape, construction details, and mixed construction types are not represented in the test piece.

Polish material requirements are based on a oxygen index test similar to the test used in France for large objects where only a sample of the object can be tested (NF T 51071). This test classifies materials according to the results of the test as [90]:

- noninflammable (P 1) for materials with oxygen index greater than 28 percent,
- hardly inflammable (P 2) for materials with an oxygen index in the range of 21-28 percent, and
- easily inflammable (P 3) for materials with an oxygen index less than 21 percent.

The International Organization for Standardization (ISO) noncombustibility test 1182 is a variation on the DIN 4102 Part 1 test that more carefully controls the furnace temperature and does not include a piloted ignition option. Like the DIN test, the acceptance criteria is based on a maximum temperature rise measured in the furnace.

In general, although requirements vary from country to country, the test methods overlap considerably (for instance, the requirements in Spain use the French test methods exclusively). In addition, where the methods don't overlap directly, the measurements and tests are still similar (e.g., the ISO 1182 and DIN 4102 tests described above). The single unique test method is the British seat test. This test is useful for assessing the fire performance of single seat assemblies, but has limitations in actual end-use configuration (the test uses standard fabric and a mockup of the seat) and in the interaction between multiple seats.

4.1.4 Fire Detection and Suppression Systems

In the British Standard Code of Practice, portable extinguishers are required in passenger cars and driving cabs; cooking cars require a fire blanket. Smoke-activated fire alarm systems are required in sleeping coaches arranged to sound an alarm in the affected compartment, and in the ventilation system to alert the entire coach. Visible alarms for the hearing impaired should be considered.

The UIC Code 642 requires portable fire extinguishers in both driver's cabs of motive power units. The required capacity of the extinguisher depends upon the mode of power generation (electrically powered units require smaller capacity than combustion engine units). Fixed fire extinguishers may be fitted with fixed fire extinguishers operable without entering the engine room.

4.1.5 Emergency Egress

Emergency egress requirements in BS 6853 include provision of both side and end doors for emergency egress of passengers, along with a requirement to "consider" appropriate provisions for disabled people. Rather than special escape windows, the standard specifies the provision of special hammers to break out windows in an emergency.

4.2 French Requirements

4.2.1 Motive Power Unit and Passenger Car Design

Beyond the fire extinguishing requirements to be discussed in section 4.2.5, no special requirements for locomotives were identified. The general electrical safety requirements outlined below would apply to power cars as well as passenger cars.

The French standards deal only with the vehicle, and (beyond requirements for the "ability to effectively clean accumulated grime during maintenance") depend wholly on the provision of partitions as barriers to limit fire spread and on control of materials. There are to be three such partitions-per-roof extending across the width of the car. Doors and other breaches of the partitions are to be designed to prevent fire propagation.

Under NF F 13-197 "Railway Rolling Stock, Air Conditioning Treated Air Sheaths" [91], ventilation systems require noncombustible ducts which do not reduce the effectiveness of partitions through which they pass and that can be cleaned. The systems must shut down automatically if they exceed "normal" operating conditions.

4.2.2 Restaurant Cars

In the documents reviewed, only the UIC Code 564-2 [32] contains provisions covering cooking equipment which would apply to vehicles which travel internationally in Europe. Detailed specifications for design and use of liquified gas in vehicles for cooking and heating are included. No requirements covering exhaust hoods and ducts for cooking equipment or detailed appliance requirements are included.

4.2.3 Material Controls

Like the U.S. requirements, the French requirements rely heavily on material controls. Material selections are governed by NF F 16-101, "Railway Rolling Stock, Fire Behaviour, Choice of Materials" [92], and NF F 16-102, "Railway Rolling Stock, Fire Behaviour, Choice of Materials,

Application to Electrical Equipment," [93]. The French standards provide for two types of classification of material properties, "reaction to fire," (analogous to the U.S. flammability guidelines) and "toxicity" (actually a combination of smoke emission and toxicity). Acceptance criteria vary by application and depend on both the "reaction to fire," and toxicity test results.

The "reaction to fire" tests in all cases classify the material into one of six fire resistance categories. The term "reaction to fire" is defined in NF X 65020 as the "supply to the fire and the development of the fire." If a complete item can be tested, or if the sample fits into a category which fits in the NF P 92501 - NF P 92510 series "Building Materials, Reaction-to-Fire Tests" [94], then the item is labelled M0 to M5 (with M0 being considered noncombustible and M5 the most flammable). Otherwise, a sample can be tested with one of the three tests NF T 51071 "Plastics, Determination of the Oxygen Number" [95], NF C 20455 "Test Methods, Fire Behaviour, Glow Wire Test" [96] or NF G 07-128 "Textiles, Behaviour in Fire, Determination of the Oxygen Number" [97], and the sample categorized as I0 to I5, which are equivalent to M0 to M5. Electrical cables are tested using NF C 30070 and use a nomenclature of A, B, C, and D which correspond directly to M1 to M4, or I1 to I4. The "reaction to fire" tests use a complicated set of rules. For example, if a material is observed to have "significant" dripping during one of the basic flame spread tests appropriate to the material and application, then it must be tested under another test.

The "toxicity" tests classify the materials on the basis of a combination of smoke emission and the toxicity of the material. The toxicity classifications are then in the range of F0 to F5, much like the "reaction to fire" classification. The F0 designation is reserved for items which are deemed to be noncombustible. Otherwise, the standards designate a rating based on the results of the tests. The test which deals with smoke emission is NF X 10702. It is the same as the Smoke Density Chamber (ASTM 662). The toxicity test, NF X 70100 is an analytic test.

Once the tests have been completed and the categories established, the standards prescribe a complex set of allowable (pass) criteria. The early standards (NF F 16101 through NF F 16103) used 18 matrices. The matrices specify the passing, marginal and unacceptable ranges of the "M" and "F" indices based on the material, the amount present, and its intended application. The latter includes division of passenger, locomotive, etc., applications. Later, the French Railway Organization (SNCF) and the Paris Rapid Transit Authority (RATP) simplified the set considerably by using only a single acceptance matrix, with more stringent requirements on materials. However, the new SNCF policy does not cover all materials.

In addition to the standards and their associated test methods, the criteria are based on the application, defined in three broad classes:

- All rolling stock, including their drivers' cabins, which travel *frequently* through tunnels.
- Urban and suburban rolling stock which travel *infrequently* through tunnels.
- Mainline rolling stock, including locomotives, which travel *infrequently* through tunnels.

The primary differences are the exposure of people outside of the trains and the effect of confinement of the products of combustion to the passengers of the train.

The specific standard which is applicable to a particular material depends on its use (curtain, cushion cover) and, in addition, depends on the intended use of the cars. A further complication is that the final test to be used depends in many instances on the results of earlier tests. It is also not clear at this point which standards are actually enforced. With this ambiguity in mind, the most stringent requirement for each test method will be cited in this report. The specification "NF P 92507 - Classification of Materials" provides the criteria which are applied to the results of the tests to determine the classification of the material.

Class M0 is assigned if the requirements for class M1 are met and the heat of combustion (upper calorific potential test by NF P 92510) does not exceed 2500 kJ/kg. To determine the classifications M1 to M5, a series of tests is conducted. For rigid materials or flexible materials greater than 5 mm in thickness, the test NF P 92501 is used. For these materials, there are various caveats about what happens if there is unusual behavior, such as melting without ignition. For flexible materials less than or equal to 5 mm in thickness, the NF P 92503 test is used. This also includes various caveats for which test to use if there is dripping, if the primary test fails, etc. For the situation where dripping or melting occurs, the flame spread test (504) or dripping test (505) must be used. For certain materials (including man-made fibers, plastics, paints, varnishes, adhesives, and foams) which do not pass the above tests, there is another acceptance table. Even if the standard test methods were to yield some correlation between the bench scale tests and real scale behavior, these caveats and special exceptions could mitigate real safety.

A sample grid for acceptability for a particular application is shown in Table 4. In the table, N means not allowed, A is acceptable, and P is provisional which (according to NF F 16101) is acceptable if an agreement can be reached between the manufacturer and the user of the rolling stock. All of the entries in the table have been converted to the equivalent "M" notation. In the standards and the test methods, however, M, I, and the series (A, B, C, D) are used.

Using these matrices for acceptability, the French standards are applied in a somewhat different manner than the other requirements studied. In keeping with the view of providing a risk or performance-based method, the materials are tested according to the same set of standards and then evaluated based on the application. For example, wood walls must pass with either an M1 or M2, whereas wood floors require M1, M2, or M3 depending on the type of train. Table 5 presents the desired flammability and smoke emission classifications for various components from NF F 16101. These are the most stringent combination of fire resistance and toxicity for each application. Using matrices as shown in Table 4, other combinations are possible.

Table 4. Sample Acceptance Criteria for Material Tested in the French Standards.

Toxicity Index	Fire Resistance Index						
	NF P 92501 to NF P 92507 (Standard Tests)	M0	M1	M2	M3	M4	NC
	NF T 51071, NF G 07128, and NF C 20455 (Tests for small samples)	I0	I1	I2	I3	I4	
	NF C 32070 (Electrical Cables and Conductors)		A	B	C	D	
F0		A	A	P	P	N	N
F1		A	A	P	P	N	N
F2		A	A	P	P	N	N
F3		A	A	P	N	N	N
F4		A	A	N	N	N	N
F5		A	N	N	N	N	N

A - acceptable, P - provisional, N - not acceptable

NF F 16-103, "Railway Rolling Stock, Fire Protection and Fire Fighting," [98] requires that partitions which separate high voltage (greater than 500 volts) electrical or heat-producing parts, and the ends of cars must exhibit a 15-minute fire resistance.

4.2.3.1 Radiant Panel Fire Performance Test for Rigid Materials – NF P 92501

This is the primary test for any rigid material and flexible materials more than 5 mm thick (Figure 6). The test is performed with 4 samples. The sample held at an angle of 45° with an electric radiator providing a heat flux of 30 kW/m^2 (500 W at 30 mm). Two butane pilot flames provide the ignition source. There are several indicators for "reaction to fire," a flammability index, a spread index and an index for the maximum flame length. These are combined to determine the rating of M1 to M4. If the flame burns less than 5 s, then the M1 rating is assigned. M2 and M3 are assigned based on the measured indices. If all indices exceed a certain value, then the rating of M4 is assigned.

Parameters which are measured are the ignition time - the pilot flame is removed at this point (visually), the maximum flame height every 30 s (visually), the mean temperature every 15 s in the sample as measured with thermocouple, and visual observation of dripping, or flaming particles (visually). If burning takes place, then the test is performed for 20 min. If dripping or flaming drops are observed, then NF P 92505 must be used. This test is similar to NF P 92502 and NF P 92503,

Table 5. French Requirements for Fire Resistance and Toxicity in Rail Vehicles

Component		Minimum Acceptable Classification	
		Rolling stock which travels frequently through tunnels	Rolling stock which travels infrequently through tunnels
Ceiling panels		M0 F0	M0 F0
Wall panels, curtains, lamps, seating[a], flooring		M1 F1	M1 F0
Interior electrical equipment[b]	Mass ≤ 300 g	nr[c]	nr
	Mass > 300 g	M3	M3
	Mass ≤ 100 g	M3	M3
	Mass > 100 g	M2	M2
Exterior electrical equipment	Mass ≤ 300 g	nr	nr
	Mass > 300 g	M3	M4
Exterior cables		M2 F1	M2 F2
Interior cables[d,e]		M1 F1	M1 F1
Bedding		nr	M1 F1
Folding tables[f], door frames		M2	M2
Insulation		M1	M1
Internal walls of HVAC ducts[g]		M0	M0
Interconnecting door seals		M2	M2
Outside door seals, window seals		M2	M3

a Each component of a seat must meet these criteria individually.

b The first two rows in this section are for mechanical areas where there are nominally no passengers. The second two rows are for vehicles which carry passengers.

c nr = No Requirement

d For cables and other electrical equipment, both for interior and exterior use, the location and the mass of the part determine the acceptance matrix. This matrix has a dependency on the toxicity as well as the fire resistance.

e The cable tests use a slightly different notation. They are classed on a scale from I1 to I3 and these correspond to M1 to M3.

f The index for these components depends on the toxicity rating.

g The interior of HVAC ducts must be non-combustible unless the toxicity value is F0 or F1, in which case it can meet the M1 rating.

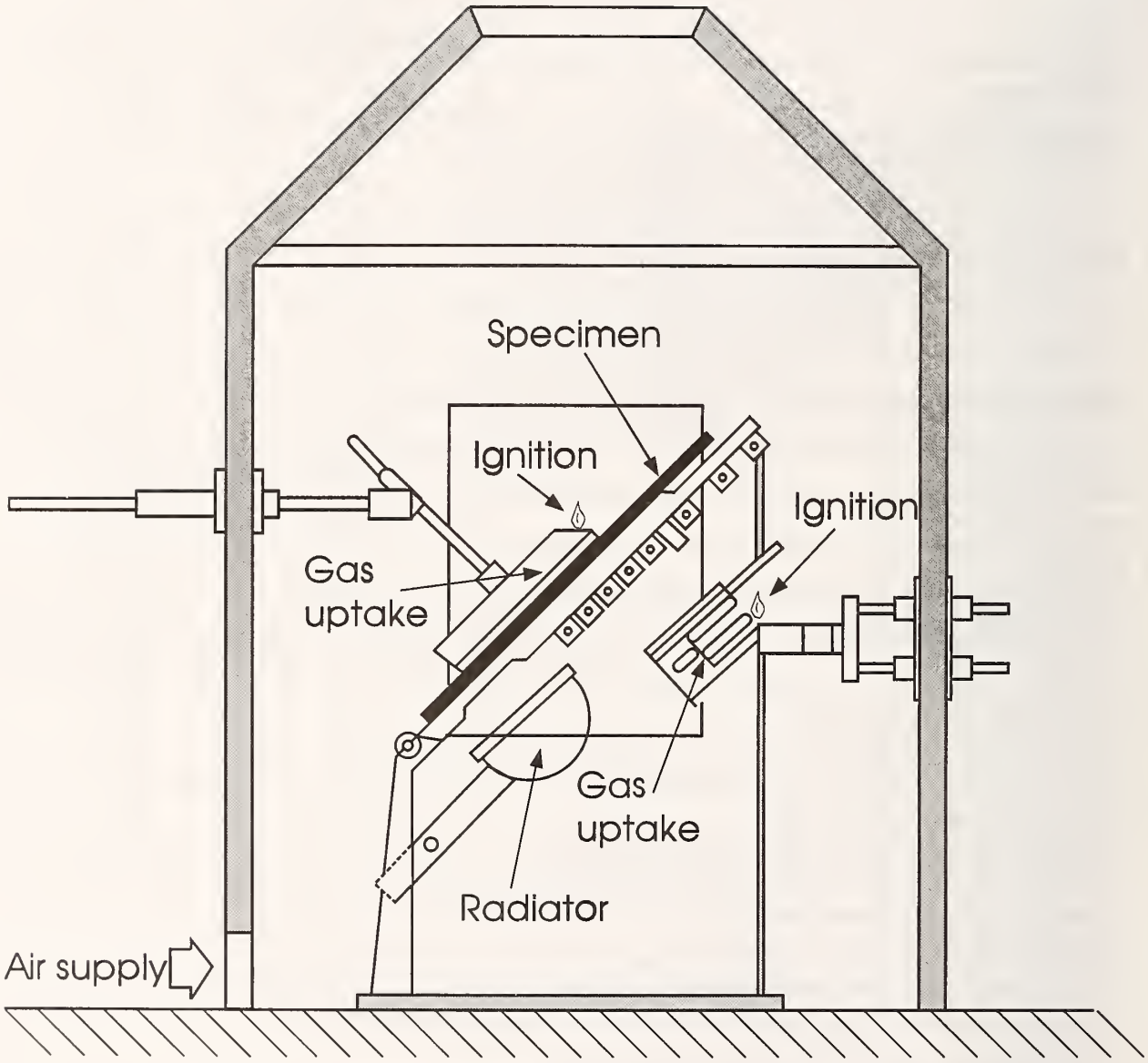

Figure 6. The NF P 92501 Epiradiateur Flammability Test.

which apply to flexible materials. The primary difference is in the sample holder. This test is similar to the test shown in Appendix 4 of UIC 564-2, except that an electric radiant panel is used in this test instead of an alcohol burner.

Classification into the categories M1 to M4, based on four calculated indices is shown in Table 6. The indices are:

Table 6. Classification for rigid or flexible materials greater than 5 mm in thickness using Test NF P 92501

Classification	M1	M2	M3	>M3
Flammability	0	-	-	M3
Flame spread	0	< 0.2	< 1	≥ 1
Max. flame length	0	< 1	< 1.5	≥ 1.5
Combustibility	< 1	< 1	< 1	≥ 1

- The *flammability index* is the inverse of the time to ignition. Such an index would be useful in determining the propensity of a material to ignite. The heat flux exposure is fairly severe, and thus the test measures the possibility of a surface not igniting after other materials are burning.

- The *flame spread index* is the sum of the maximum flame lengths over the entire test. Thus, a thick material will not do as well as a thin material even though it might produce less heat, and toxic gases. It is not clear that this provides any true measure of flammability.

- The third index is the *maximum flame height divided by 20.* Although a crude measure of fire size, test documentation does not appear to show a relationship to physical fire phenomena.

- The *combustibility index* is the product of the burning time and the temperature rise. This is somewhat analogous to a rate of heat release. The rate of heat release has been verified as having a correlation between small scale test such as this and full scale involvement of fires. Thus, this combustibility index would appear to be a useful measure.

4.2.3.2 Radiant Panel Fire Performance Test for Flexible Materials – NF P 92502 and NF P 92503

These tests are similar to NF P 92501. NF P 92502 has been replaced by NF P 92503. The former used an alcohol burner, the latter an electric panel. NF P 92503 is shown in Figure 7. Classification (Table 7) is similar to NF P 92501.

The sample is held at an angle of 30° rather than the 45° of NF P 92501, but the radiant flux is identical. The sample holder is different to allow for the nature of the material. The test is run for only 5 min, or until extinction.

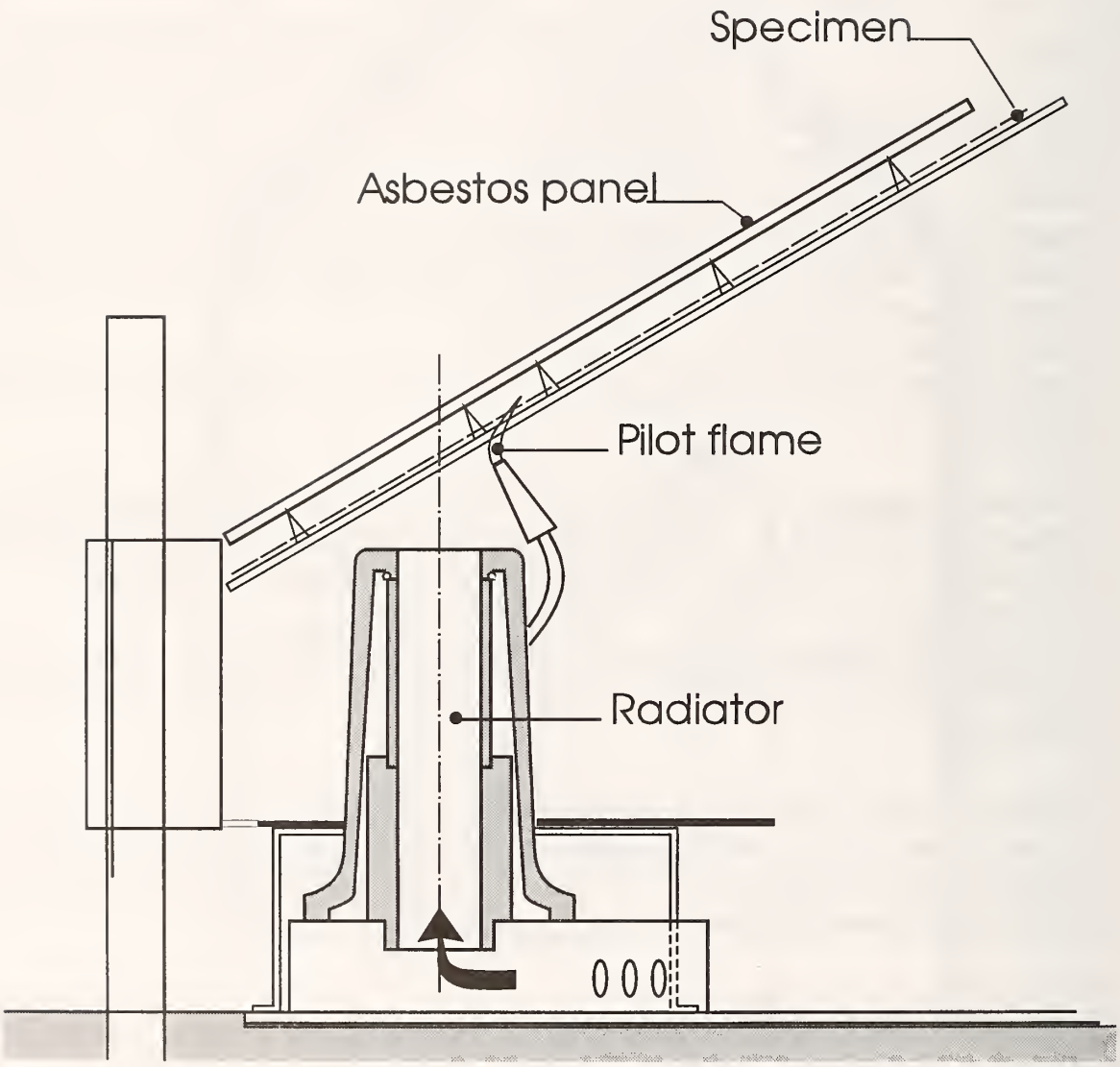

Figure 7. The NF P 92503 Burner Test for Flexible Materials.

4.2.3.3 Rate of Flame Spread – NF P 92504

Table 7. Classification for Flexible Materials ≤ 5 mm in Thickness Using Test NF P 92503

Classification	M1	M2	M3	M4
Duration of burning (s)	≤5	>5	>5	>5
Damage - length (mm)	-	<350	<600	≥600
Damage - width (mm)	-	-	<90	≥90
Droplets	none	none	none	

This test is secondary to NF P 92501 and NF P 92503. It is used if there is significant dripping, or if the fire will not propagate because of melting. The sample is held horizontally and is ignited at one end with a flame from a small Bunsen burner. The time for the flame to propagate between two scribe marks is the criterion for classification. NF P 92504 also appears to be a forerunner of the test specified in UIC 564-2 Appendix 8, (ISO test method 3582) which is derived from ASTM D-1692. The latter test has been withdrawn as not applicable to judge material flammability. This is similar to other Bunsen burner tests described in section 3.3.5 of this report.

4.2.3.4 Test for Dripping – NF P 92505

This test (Figure 9) is also a complement to NF P 92501 and NF P 92503. Its use is required if "significant" dripping is observed in either of the first three tests. The sample is supported horizontally with a 500 W radial heater above the sample. The drippings are collected on a piece of cotton 300 mm below the sample holder. The primary purpose is not to induce ignition, but should ignition occur, the test has a procedure. Should the cotton be ignited, the material is classified as M4. Under SNCF policy, no material which has an M4 rating can be used in conventional rail vehicles.

4.2.3.5 Radiant Panel Test for Floor Coverings – NF P 92506

This test, shown in Figure 10, is specific to floor coverings. The radiator is run at a temperature of 850 °C (1560 °F). Although the test bears a superficial resemblance to ASTM E 162, it is much closer to the British test BS 476 discussed in section 4.1. ASTM E 162 uses a vertical orientation at a temperature of 670 °C (1240 °F) whereas BS 476 uses the same orientation except the operating flux is specified as 32.5 kW/m^2, which is equivalent to a temperature of 870 °C (1600 °F). The French test is run with a small (400 mm x 95 mm) sample with the long axis in the horizontal and the short side vertical. For the ASTM E 162, the orientation is rotated 90° and slanted.

NF P 92506 is a complementary test for floor coverings and is used only if the material does not achieve an M1 or M2 in the primary tests (NF P 92501 and NF P 92503). The similarity between NF P 92506 and standard flame spread test such as the "Standard Test Method for Determining Ignition and Flame Spread Properties, ASTM E-1321" (Lateral Ignition and Flame Spread Test)

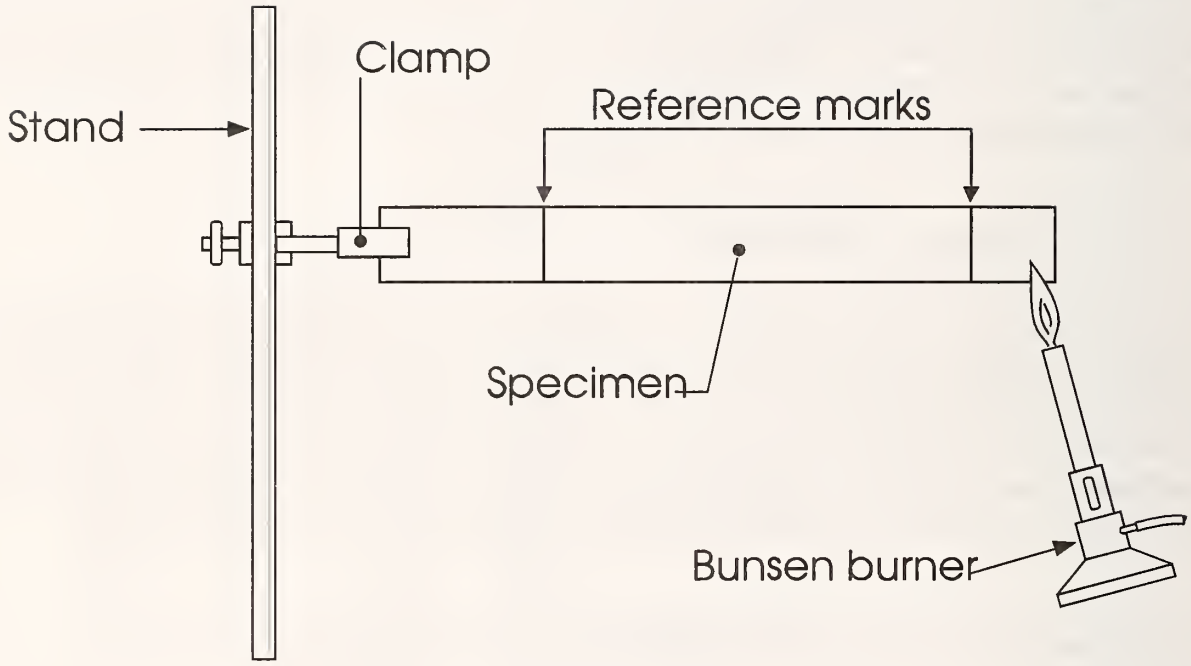

Figure 8. The NF P 92504 Bunsen Burner Test for Small-ignition Source Flammability.

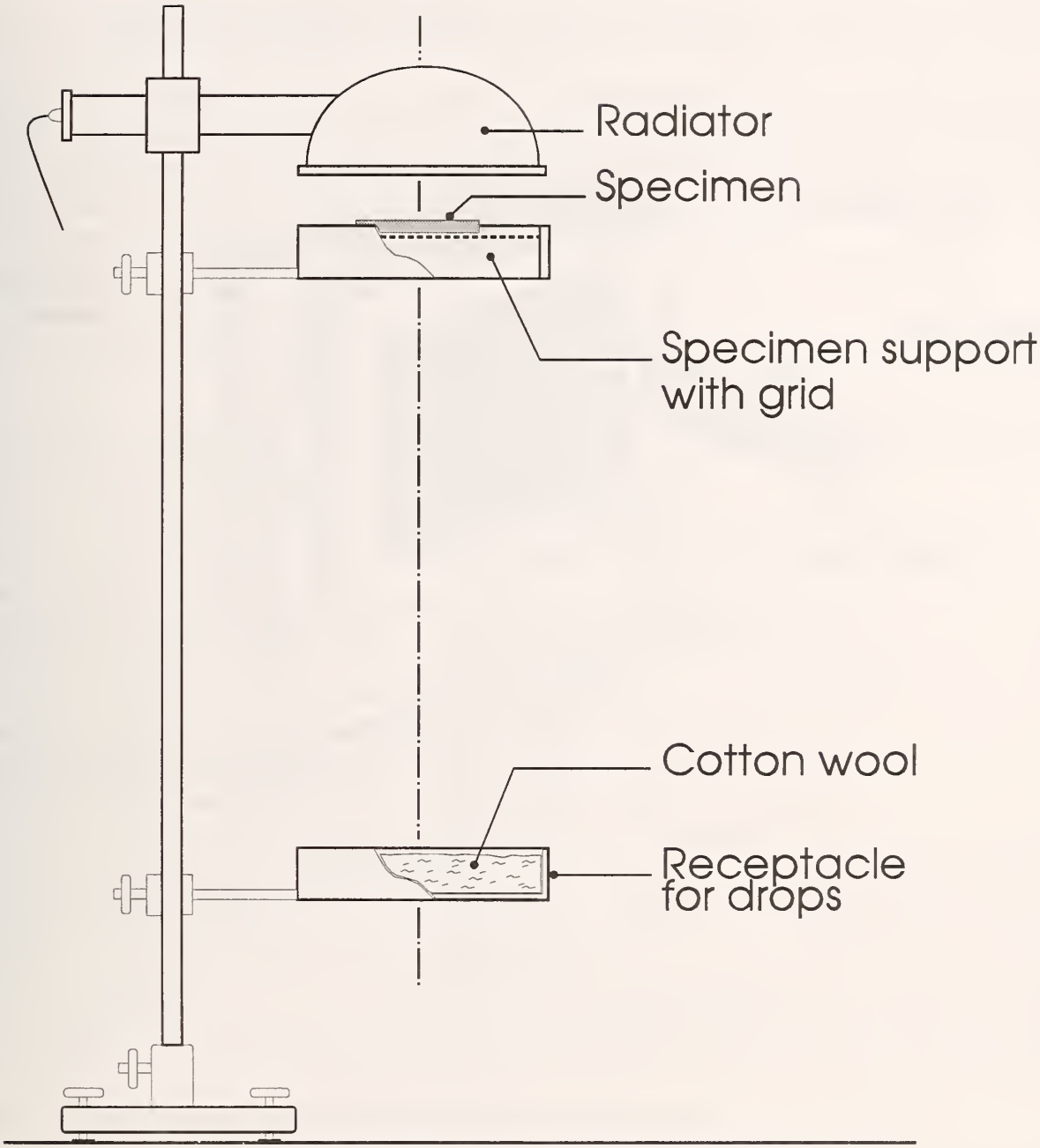

Figure 9. The NF P 92505 Dripping Test.

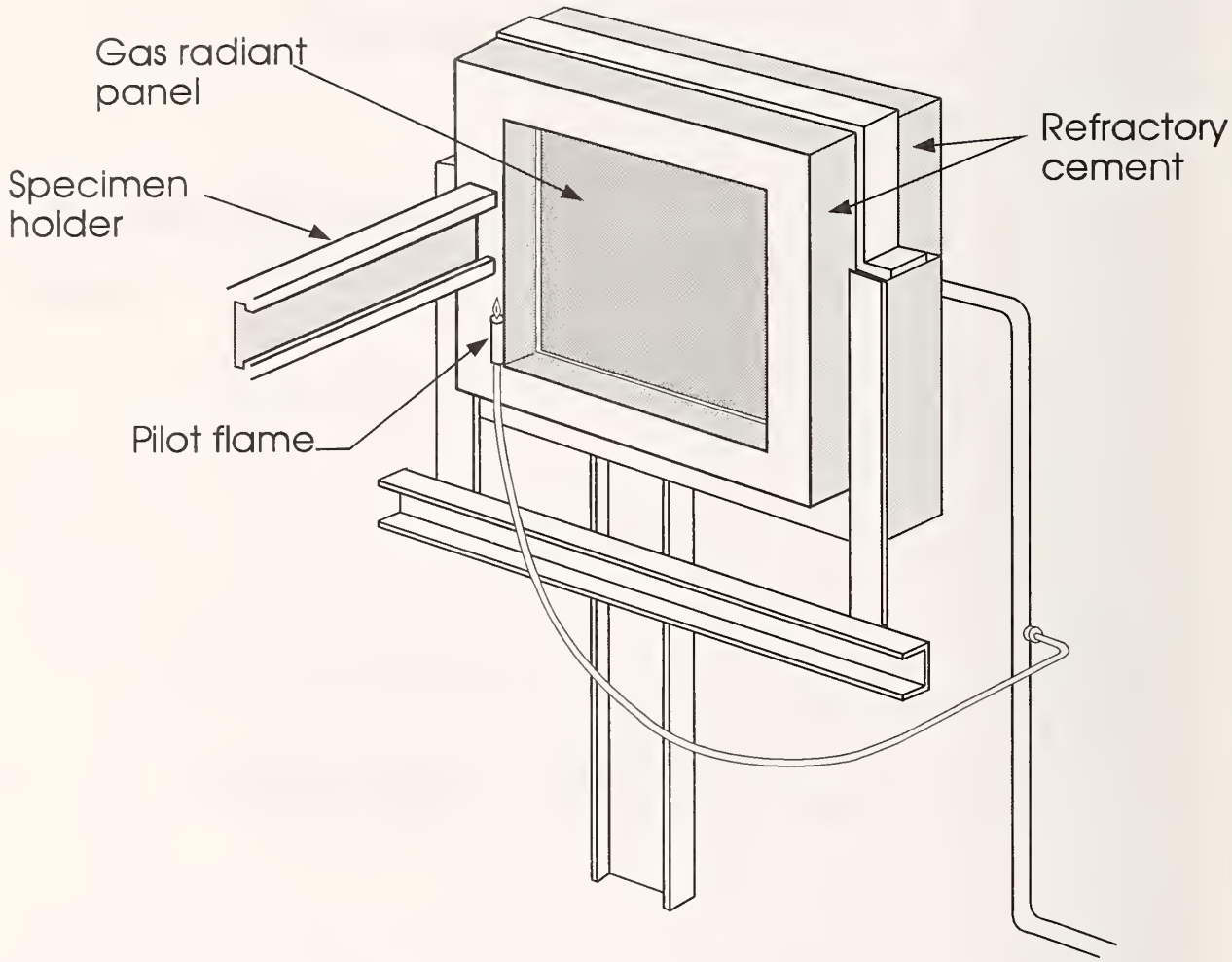

Figure 10. The NF P 92506 Floor Covering Test.

[99] suggests that the French test could be modified to yield flame spread information which is important in using bench-scale tests for predicting the real-scale behavior of a material.

4.2.3.6 Calibration of the Heat of Combustion (Calorific Potential) of a Material – NF P 92510

This test, a bomb calorimeter test, is essentially a calibration for NF P 92501 and NF P 92503, is used to distinguish between classes M0 and M1. The test is used only if a material is classified M1 in tests NF P 92501 and NF P 92503. If the heat of combustion is less than 2500 kJ/kg, then the classification M0 is used. In general, this applies only to inorganic materials where there might be a combustible binder, fascia or some other small component.

4.2.3.7 Oxygen Index Tests for Small Samples - NF T 51071, NF G 07128 and NF C 20455

The two tests, NF T 51071 and NF G 07128 (Figure 11) are similar and correspond to the ASTM D2863 test for oxygen index. The test method itself does not classify the materials. The difference between these two test methods is the holder. The latter test for fabric uses a constraint whereas the former uses a supporting mechanism. The method NF C 20455 is a glow wire test for electrical components. It is not used on cables, which are subject to yet another series of tests. Rather, this is similar to the 501 to 506 series discussed above, and deals with ignition and continued burning. The classification for these three test methods is dealt with in NF F 16101, and is shown in Table 8.

Table 8. Correspondence between Oxygen Index and Reaction Classes

Class	Result of Test	
	OI	Glow Wire
I0	≥ 70	No ignition at 960 °C
I1	≥ 45	No ignition at 960 °C
I2	≥ 32	No ignition at 850 °C
I3	≥ 28	Ignition does not persist at 850 °C after glow wire is withdrawn
I4	≥ 20	
NC	< 20	Non-classified

4.2.3.8 Test for Cables and Electrical Continuity - NF C 32070

This test, similar to the IEC332 standard, is designed to test the ability of cables to withstand a fire. There are two components to the test. The first is a "reaction to fire" test, similar to NF P 92501 through NF P 92506. The other part of the test is for continuity. In a somewhat unusual turn, the test method itself specifies the classification scheme in both instances. In principle, the application determines whether the criterion C1, C2 or C3 for combustibility must be met. However, the standard

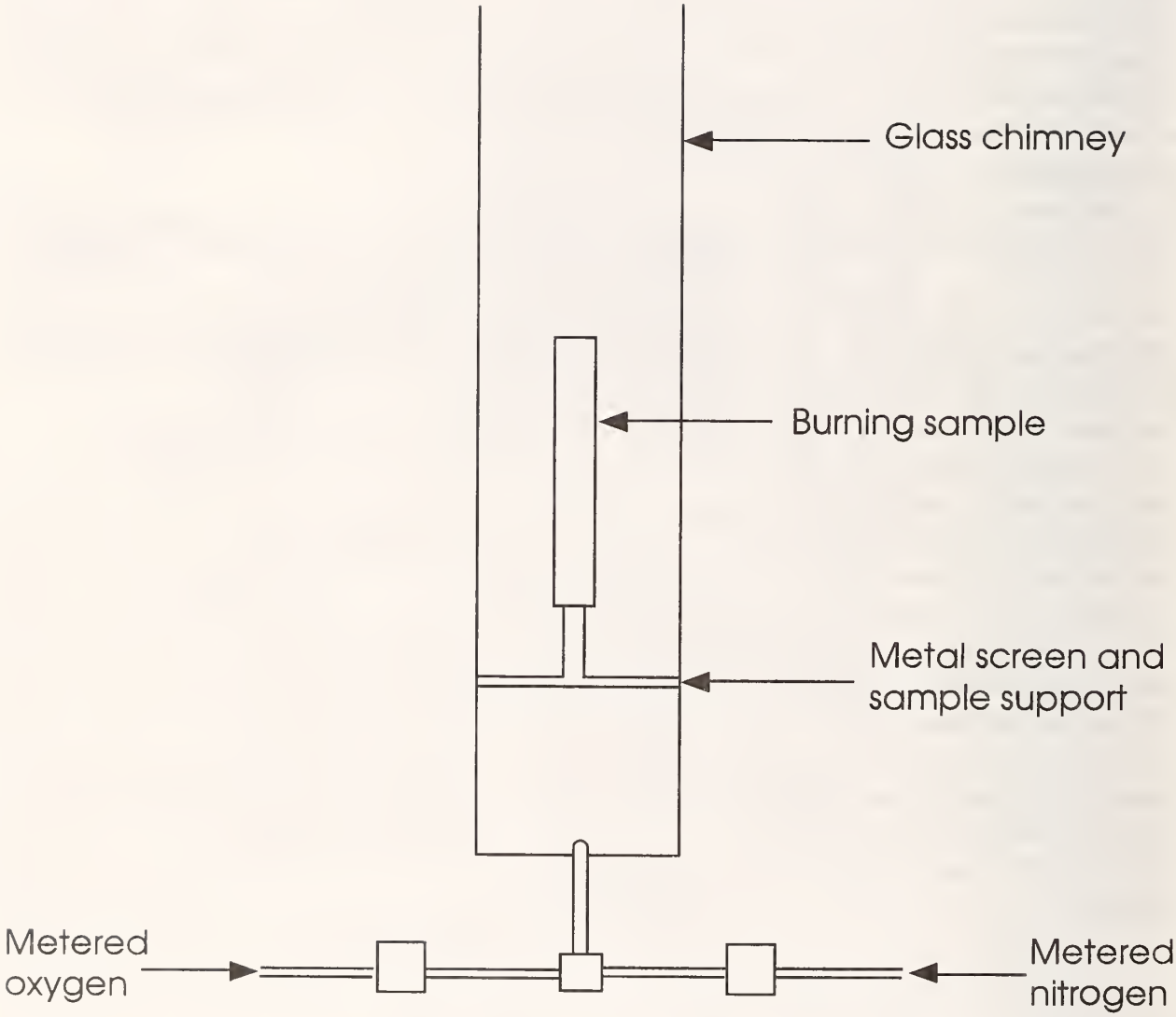

Figure 11. The NF T 51071 Oxygen Index Test for Small Samples.

does not actually use these classification schemes. Rather, any cable involved in any application for which there are stringent fire safety requirements must be classed as C1 (or noncombustible) and in addition be used in accordance with the classification as shown in Table 9.

Table 9. Classification Scheme for Conductors and Electrical Cables.

Class	Result of Part 2 of NF C 32070
A	No ignition and no degradation beyond the upper part of the furnace
B	The length of degradation beyond the upper part of the furnace does not exceed 50 mm.
C	The length of degradation beyond the upper part of the furnace does not exceed 300 mm.
D	The length of degradation does not exceed the top of the flue.
NC	The length of the degradation exceeds the top of the flue.

4.2.3.9 Toxicity Requirements

In the French requirements, toxicity measurements are made using a flow-through tube furnace (NF X 70-100 "Fire tests - Analysis of combustion and pyrolysis gases-Pipe Still method" [100]). The gases measured by the 10-700 test are CO, CO_2, HCl, HF, HBr, HCN, SO_2, and NO_x. The combustion chamber is a tube 1 m (39 in) long and 40 mm (1.6 in) in diameter. A preconditioned 1 g sample is placed in the tube furnace which is heated to 600 °C (1110 °F) for all materials except electrical wiring which are run at 800 °C (1470 °F). The effluent is pumped out during the 20 min duration of the test and the total yield measured. At the end of the run, the total of each of the gases is measured and the concentrations are calculated as a volume fraction of the effluent of each species to the original sample. These concentrations are then assumed to be the same as would be produced in a fire in parts per million, and are combined in a formula to yield a percentage of the gas relative to the maximum dose which can be tolerated without permanent biological damage.

The gas concentrations are combined in a formula much like the NIST N-Gas model [101] to form an effective lethal fraction. Each of the gas concentrations is divided by an "acceptable" value and then summed to determine a toxicity index called the *ITC*. As discussed above, the toxicity results are combined with the smoke emission results. The smoke emission index is a combination of the maximum optical density (D_m) and the optical density at 4 min (D_s) determined in the Smoke Density Chamber. These three indices are added to form a smoke index:

$$IF = \frac{D_m}{100} + \frac{D_s}{30} + \frac{ITC}{2}.$$

The materials are then classified into one of six categories (F0 to F5) based on the value of *IF* and combined with the flammability results to determine acceptability for a given application. In general, the higher the F category, the lower the limit on flammability which is allowed.

Although not used in the French railway requirements, toxicity measurements are also specified in "Fire-Smoke-Toxicity (FST) Test Specification," Airbus requirement 1000.001 [102]. Measurements in this specification are made in conjunction with smoke emission measurements in the Smoke Density Chamber. Gas samples taken during the smoke emission tests are analyzed to determine concentrations of HF, HCl, HCN, SO_2, H_2S, CO, NO, and NO_2. "Dräger Tubes" are used for analysis. The "Dräger Tube" techniques for analysis is inaccurate at best. Recent consensus standards are available to guide measurement of combustion products from fire [103]. Specific criteria are included for the gases.

4.2.4 Communication Systems

NF F 16-103 [98] includes provisions for alarm signals in passenger compartments to allow passengers to signal when an emergency has been detected. Activation of the alarm is to be followed by one of four possible reactions.

- "Empty the brake pipe." The meaning of this provision is unclear.
- For manually operated trains, a signal is transmitted to the driver's cab. In this event, the cab must have a one-way link to get information, and a two-way link to communicate with either attendants or passengers.
- For automatic trains, the signal must go to a central control facility. In this case, two-way communication between the passengers and central control must be provided.
- Any other operation requested by the customer.

4.2.5 Fire Detection and Suppression Systems

NF F 16-103 [98] has a very simple detection requirement. Heat detectors must be installed in any compartment with a thermal engine and connected to the driver's cab or central control in the case of an automatic train. If an increase in temperature is detected, the driver or central control must have the ability to shut off fuel flow or power and isolate the engine remotely. NF F 16-103 also requires that portable extinguishers be placed wherever they may be needed.

The UIC Code 564-2 contains similar requirements for heat sensors and extinguishers operable by remote control in spaces containing heat engines. Portable extinguishers are required in passenger cars. Like similar efforts in the United States, consideration has been given to the inclusion of halon extinguishing systems in passenger vehicles [104]. Limits on future use of halon precludes the use of halon extinguishing systems in new railway rolling stock [104].

4.2.6 Emergency Egress and Access

NF F 16-103 [98] makes mention of the need for manual override of automatic doors. It also specifies that if unbreakable glass is used, a third of the windows must be of hardened safety glass and be marked as emergency exits.

UIC Codes 560 and 564-1 make reference to general provisions for emergency exits. The French have also prepared an informational brochure for emergency response personnel, similar to an Amtrak guide [105], to assist in emergency evacuation procedures for the TGV [106]. This contains information on passenger loads and location, exit locations, and operation in an emergency.

4.3 German Requirements

The German Federal Railways regulations covering railroad construction (EBO) provides general safety and operational procedures for railroad operation in Germany [28]. The EBO does not contain information covering fire safety. The primary German standards covering rail car fire protection are included in DIN 5510, Preventive Railway Fire Protection in Railway Vehicles, published by the German Standards Institute (DIN) [29]. The DIN consists of

- Part 1, Levels of Protection, Fire Preventive Measures and Certification;
- Part 4, Structural Design of the Vehicles;
- Part 5, Electrical Operating Means; and
- Part 6, Auxiliary Measures, Function of the Emergency Brake Equipment, Information Systems, Fire Alarm Systems, Fire fighting Equipment.

These standards are utilized for multiple rail applications from streetcars (in the requirements of the BOStrab [30]) to magnetic levitation systems (in "High-Speed Maglev Trains: German Safety Requirements" (RW MSB) [31]). In addition, a draft DIN 5510, Part 2, "Combustion Behavior and Fire Side Effects of Materials and Parts – Classification, Requirements, and Test Methods" outlines test methods and acceptance criteria for material controls.

To allow for evacuation and containment of fire spread, a train is divided into fire sections that must contain a fire for at least 30 min as part of the protection requirements in DIN 5510 Part 4. Although prescriptive requirements are included, DIN 5510 is much closer to a performance-based standard than the U.S. requirements. The overall goal of the requirements is to provide "passenger protection in railway cars" [107]. To meet this goal, three specific objectives are defined: (1) Prevention of a fire caused by arson in the passenger compartment, (2) prevention of a fire caused by technical defects in the passenger compartment, and (3) delay and limitation of the spread of the fire for those cases in which objectives (1) and (2) are not achieved.

The requirements in the RW MSB are also defined in a more general way than in the United States (e.g., material test requirements apply to "linings and fittings," rather than to specific categories and functions of materials as in the U.S. requirements). This report presents an interpretation of the applicability of the requirements in the context of the U.S. categories to provide consistent comparison of requirements.

4.3.1 Motive Power Unit and Passenger Car Design

DIN 5510 Part 4 covers the structural design of railway vehicles. Vehicles must be designed to prevent arson or accidental fire and in the event of a fire, prevent or delay the spread of fire sufficiently to allow passenger evacuation. In addition, reference is made in DIN 5510 Part 4 to the compartmentation of electrical systems to prevent fire spread (DIN 5510 Part 5).

The RW MSB requires that the system must be designed to maintain a safe hover long enough for the vehicle to reach a safe evacuation point – with vehicle, structural integrity, and electrical system design requirements to provide such capability. Fire endurance requirements are extensive, with application to all structural components, including floors, walls, and ceilings. The RW MSB requires that the collapse or transmission of heat by support structures be "prevented or at least adequately delayed." Such support structures would include ceilings, load-bearing walls, and flooring. Such structures must maintain structural integrity long enough for evacuation which is defined as 30 min. Discussion of testing to meet the requirement is discussed in section ?.

Electrical protection requirements as detailed in DIN 5510 Part 5 are typical, involving separation of circuits above and below a 500v level, physical separation by grounded and fire resistant barriers, overcurrent protection, and attention to sparking/arcing potential. Circuit isolation is addressed such that short circuits cannot create cascading failures. Where wiring is necessary for control of emergency functions, it must be routed separately from other wiring similar to the arrangements typical of nuclear power plants. This is done to assure that critical controls are not damaged during failures in operating equipment.

The German requirements in "Preventive Fire Protection in Railway Vehicles; Electrical Operating Means; Safety" DIN 5510 Part 5 limit the location of wiring, equipment, and controls within the walls of passenger spaces to those necessary for lighting, emergency control, or communication [108]. This places the bulk of the train's equipment below the car where stringent separation requirements are implemented. In fact, compartmentation is a central feature in most of the German requirements.

Arson prevention also plays a key role in the requirements in BOStrab and DIN 5510 part 4. The focus is to limit ignitability of exposed surfaces and limiting places where a potential arsonist might hide.

4.3.2 Restaurant Cars

In the documents reviewed, only the UIC Code 564-2 [32] contains provisions covering cooking equipment which would apply to vehicles which travel internationally in Europe. Detailed specifications for design and use of liquified gas in vehicles for cooking and heating are included. No specific requirements are included which cover exhaust hoods and ducts for cooking equipment as were apparent in the Amtrak requirements.

No specific German requirements are included which specifically cover restaurant cars. The provisions covering passenger vehicles would apply to restaurant cars as well.

4.3.3 Material Controls

The German Federal Railways "Railroad Construction and Traffic Regulations" (EBO) provides general safety and operational procedures for railroad operation in Germany. No information is included covering fire safety. The primary German standards covering rail car fire protection are included in DIN 5510. These standards are utilized for multiple rail applications from streetcars (in the requirements of the Bostrab) to magnetic levitation systems (in the RW MSB).

For German streetcars, flammability regulations are covered in the "Directive Concerning the Construction and Operation of Streetcars" (BOStrab) [30] and [109]. Like the DIN 5510 and the RW MSB, the primary goal is passenger safety. The goal is subdivided into similar subgoals of the prevention of arson, prevention of system intrinsic fires, and the limiting spread of fires. The BOStrab implements these goals in a different manner than DIN 5510 or the RW MSB. Vehicle requirements specify test criteria for individual components. The test methods are primarily defined in DS 899/35. However, some use of tests equivalent to the RW MSB are used – primarily the tests from DIN 4102, Part 1 on the combustibility of materials. Since many of the tests specified by the BOStrab are identical to those specified in in DIN 5510 and the RW MSB, a review of the important tests for the BOStrab is included with the review of German test methods.

There are notable differences between the tests specified in DIN 5510, Part 2, the BOStrab and the RW MSB:

- Only the RW MSB includes a specification for heat release rate (HRR) testing. Although such a test is mentioned in the commentary supplied with the preliminary draft of the regulations, the BOStrab does not include an HRR test. In its place, the BOStrab uses the concept of fire load using isothermal bomb calorimeters to determine the total amount of heat generated by an object.

- DIN 5510 and the BOStrab uses a "paper pillow" test to evaluate seating flammability. In this test, a 100g newspaper is made into a "pillow" and ignited on a seat. The specified

pillow burns for about five minutes. To pass the test, the seat must go out after 10 minutes from the start of the test.

A summary of test methods for flammability and smoke emission specified in DIN 5510, the RW MSB, and the BOStrab are given in Table 10. Five bench-scale test methods form the core of the requirements:

- DIN 4102 part 1, "Fire Behavior of Building Materials and Building Components; Building Materials Concepts, Requirements and Tests,"

- FAR 25.853, Appendix F, part IV, "Test Method to Determine the Heat Release Rate from Cabin Materials Exposed to Radiant Heat," (using the OSU apparatus for measuring heat release rate),

- DS 899/35 (or the equivalent DIN 54 341), "Bulletin Concerning the Testing of the Fire Behavior of Solid Materials,"

- UIC Code 564-2 OR "paper pillow" test, and

- ASTM F-814, "Standard Test Method for Specific Optical Density of Smoke Generated by Solid Materials for Aerospace Applications."

4.3.3.1 Combustibility – DIN 4102

A noncombustible material is considered to be a class A material in German building code, DIN 4102, Part I "Fire Behavior of Building Materials and Building Components" [110]. The presentation by Troitzsch [25] outlines the two ways to determine whether a material is Class A:

- Find the material listed as Class A in DIN 4102, Part 4, a list of acceptable materials for particular applications.

- Test the material according to DIN 4102, Part 1, and have it pass the criteria for a class A material. The criteria defined in DIN 4102 part 1 are subdivided into either Class A1 or Class A2, with A1 being stricter then A2.

To be considered an A2 material, the specimen must pass the fire shaft (Brandschacht) test (Figure 12), smoke density test, toxicity test, and calorific potential and heat development test. The fire shaft test is a crude calorimeter test. A sample of 1000 x 140 mm is placed vertically in a shaft. An airflow of a prescribed rate flows though the shaft. The sample is subjected to a gas burner flame

Table 10. German Flammability and Smoke Emission Requirements

Category	Requirement	Test Procedure	Performance Criteria
Support Structures (Walls, floors, columns, roof)	BOStrab RW MSB	DIN 4102, Part 2, 4	Fire Resistance F 30
Batteries Cases	DIN 5510, Part 2 BOStrab	DS 899/35 DIN 54 341 DIN 4102, Part 1	Destroyed length of sample varies depending on assigned combustibility class
	RW MSB	FAR part 25.853	avg total HR < 65 (kW min)/sec avg peak HRR < 65 kW/m^2
Partitions (Walls, Doors, Shutters, Gates, etc.)	BOStrab RW MSB	DIN 4102, Part 4, 5	Fire Resistance F 30
	DIN 5510, Part 2 BOStrab	DS 899/35 DIN 54 341 DIN 4102, Part 1	Destroyed length of sample varies depending on assigned combustibility class
	RW MSB	FAR part 25.853	avg total HR < 65 (kW min)/sec avg peak HRR < 65 kW/m^2
Fitting and Lining Elements, Batteries and Cabling	DIN 5510, Part 2 BOStrab RW MSB	DIN 4102, Part 1	Destroyed length of sample varies depending on assigned combustibility class
	RW MSB	FAR part 25.853	avg total HR < 65 (kW min)/sec avg peak HRR < 65 kW/m^2
		FAR part 25.853	T < 400 °F
		ASTM E-814	D_s (4.0) ≤ 150
Seating	DIN 5510, Part 2 BOStrab UIC Code 564-2	"Paper pillow" test	avg t ≤ 10 min avg are burn ≤ 150 cm^2
	RW MSB	FAR part 25.853	avg total HR < 65 (kW min)/sec avg peak HRR < 65 kW/m^2

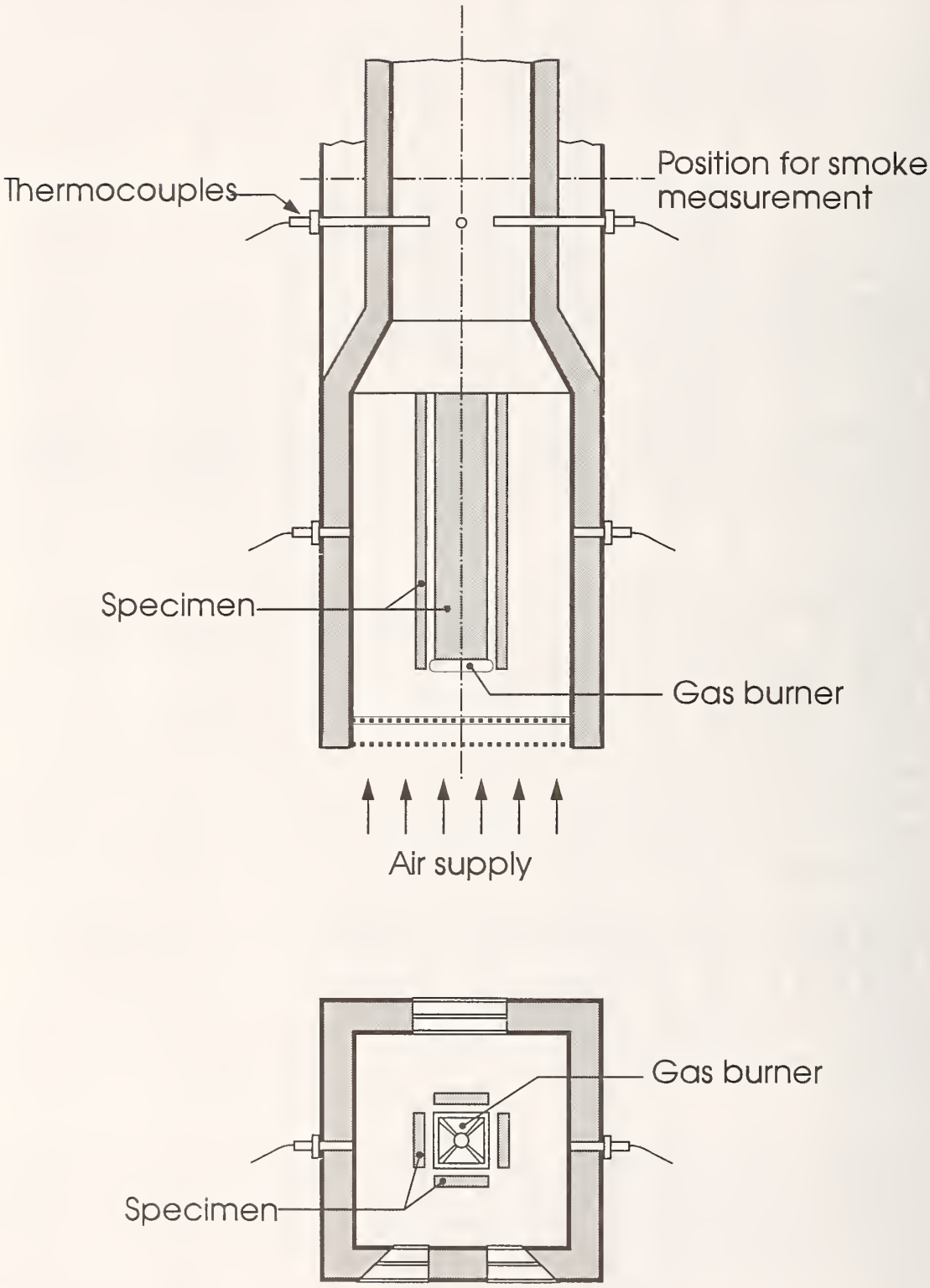

Figure 12. The DIN 4102 Fire Shaft or "Brandschacht" test.

at the bottom of the sample for 10 min and during that time it must not generate heat sufficient to raise the outlet air temperature to 140 °C. The residual length of the unburned material must be, on average, at least 350 mm with no sample less than 200 mm.

The smoke density test is based on ASTM D 2843 using the XP2 apparatus which is a precursor to the Smoke Density Chamber [111], [112]. The main difference is the horizontal orientation of the specimen compared to a vertical orientation in the Smoke Density Chamber. In the test, the smoke must not have an absorbance of more than 15% which is comparable to a D_s of 26.

The toxicity test is based on rat exposures according to DIN 53 436 and, according to the regulation, is not allowed to "raise objections." Rats are exposed for 30 min to cooled smoke and gases from materials decomposed in a tube furnace. The COHb levels in the rats blood are measured along with the exposure concentrations of CO, CO_2, and O_2 The rats are observed for 14 days post-exposure. A detailed discussion of toxicity requirements is included in section 5.2.6 of this report.

The calorific potential and heat evolution tests provide a crude measure of a materials heat release rate. The calorific potential test determines the heat of combustion with an isothermal bomb calorimeter and must be less than 4,200 kJ/kg to be considered a class A material. The heat evolution test determines the total heat released by a burning specimen in a bench scale test rig according to DIN 4102, Part 8 [113]. The furnace is run for an unspecified time following the time temperature curve in DIN 4102 part 2. The heat liberated, H_l, is calculated in the following manner.

$$H_l = H_u \left(\frac{M_l}{A_s} \right)$$

where M_l is the mass lost in the test in kilograms, and A_s is the surface area of the sample in meters. To pass, the heat liberated must not exceed 16,800 kJ/m^2.

As an alternative to the calorific potential and heat evolution tests, a "furnace test," similar to the ASTM E 136 test, can also be used (Figure 13). Five samples, 40 x 40 x 50 mm, are tested in a furnace maintained at 750 °C for 15 min. Air is allowed to flow in at the bottom and out the top past a pilot flame. If the furnace temperature does not rise by more than 50 °C over the period and the pilot flame does not enlarge (become more than 45 mm high or fill the opening) for more than 20 s, the material passes the test.

For a material to receive a Class A1 rating, it must pass all the requirements of Class A2 and a stricter furnace test. The Class A1 test requires 30 min furnace test and the pilot flame can never become "too enlarged" for the duration of the test.

For certain applications in the BOStrab requirements, materials from a lower class, B1, may be used. The material must pass the fire shaft test described above. However, the criteria is relaxed from the

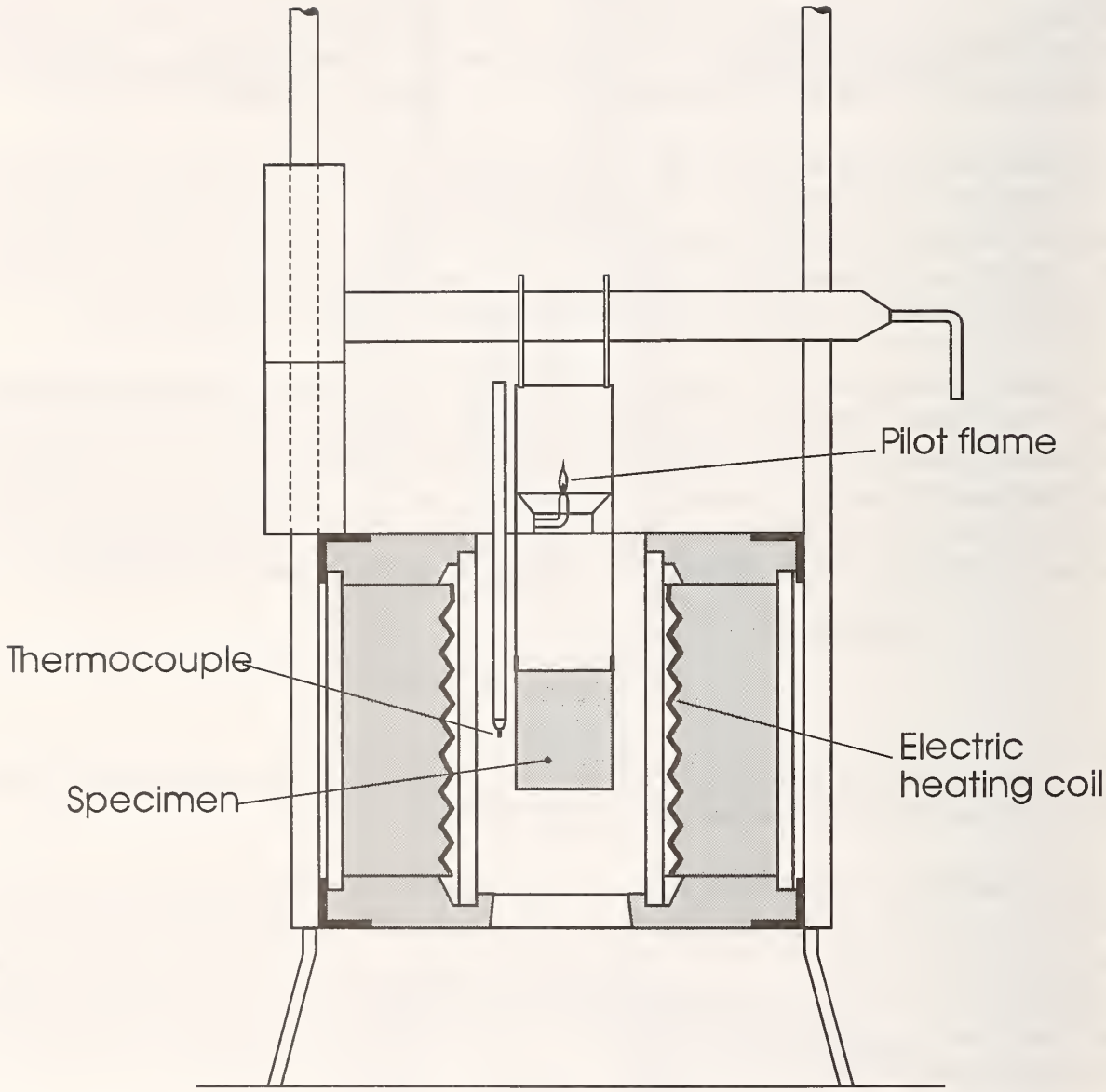

Figure 13. The DIN 4102 Furnace Test.

Class A requirements. The average residual length is only 150 mm with no sample having a residual length of 0 mm. The average temperature of the exhaust air must be no more than 200 °C. For flooring, the Flooring Radiant Panel test is to be used. The test is described in section 3.3.3 of this report. Acceptable performance must correspond to a critical radiant flux of at least 4.5 kW/m^2. Regardless of use the material must also pass a vertical Bunsen burner test. The test is conducted on a sample of 90 mm x 190 mm for the edge and 90 mm x 230 mm for the surface test. The flame is directed at the edge or 40 mm up from the bottom edge for 15 sec. The test is passed if after 20 sec the tip of the flame has not reached 150 mm above the starting point. The sample also must not have flaming droplets. To test for the flaming droplets, filter paper is placed under the specimen. If it catches fire in the 20 sec of the test the specimen fails.

4.3.3.2 Combustibility – DS 899/35 V and H

DS 899/35, "Bulletin Concerning the Testing of the Fire Behavior of Solid Materials," is an older German standard for conventional rail in use since 1972 [114], [25]. Both the horizontal (H) and vertical (V) tests are just variations on the basic Bunsen burner tests discussed in section 3.3.5. In the German variation, samples are placed in a box that allows air to flow in at the bottom and out an exhaust vent in the top. A photocell and thermocouple in the exhaust vent are used to measure the light absorbance and temperature. The sample measures 300 mm x 100 mm x usual thickness (with a maximum of 160 mm). The tests are the same except the orientation and the length of time the burner is on. In the vertical (V) test the sample face is vertical, and exposed to the burner for 3 min. For the horizontal (H) test, the sample is placed face down, and exposed for 2 min. The burner flame is applied 20 mm from the edge in each test. Materials are graded in four categories; area burned or combustibility, smoke development, "drippability," and finally heat evolution. Specific criteria for specific applications are supplied in separate documents called notebooks A and B.

4.3.3.3 Heat Release Rate – FAR part 25.853 Appendix F part IV (14 CFR Part 25)

The FAA and countries such as those in the European Economic Community have already started moving toward HRR based testing of materials [115]. The RW MSB uses FAR, Part 25.853 Appendix F part IV (the OSU HRR calorimeter adopted as ASTM E 906 – Figure 14) with some modifications [69] to measure heat release rate. The test is run with a flux of 35 kW/m^2 and an air flow rate of 2.4 l/s. Acceptance criteria were set based on the correlations between the OSU apparatus and time to flashover in real-scale tests. The values were chosen to eliminate materials with a short time to flashover in real-scale tests. Because of differing geometries and environments between aircraft and passenger guided ground transportation applications, these criteria may or may not be applicable to passenger guided ground transportation vehicles.

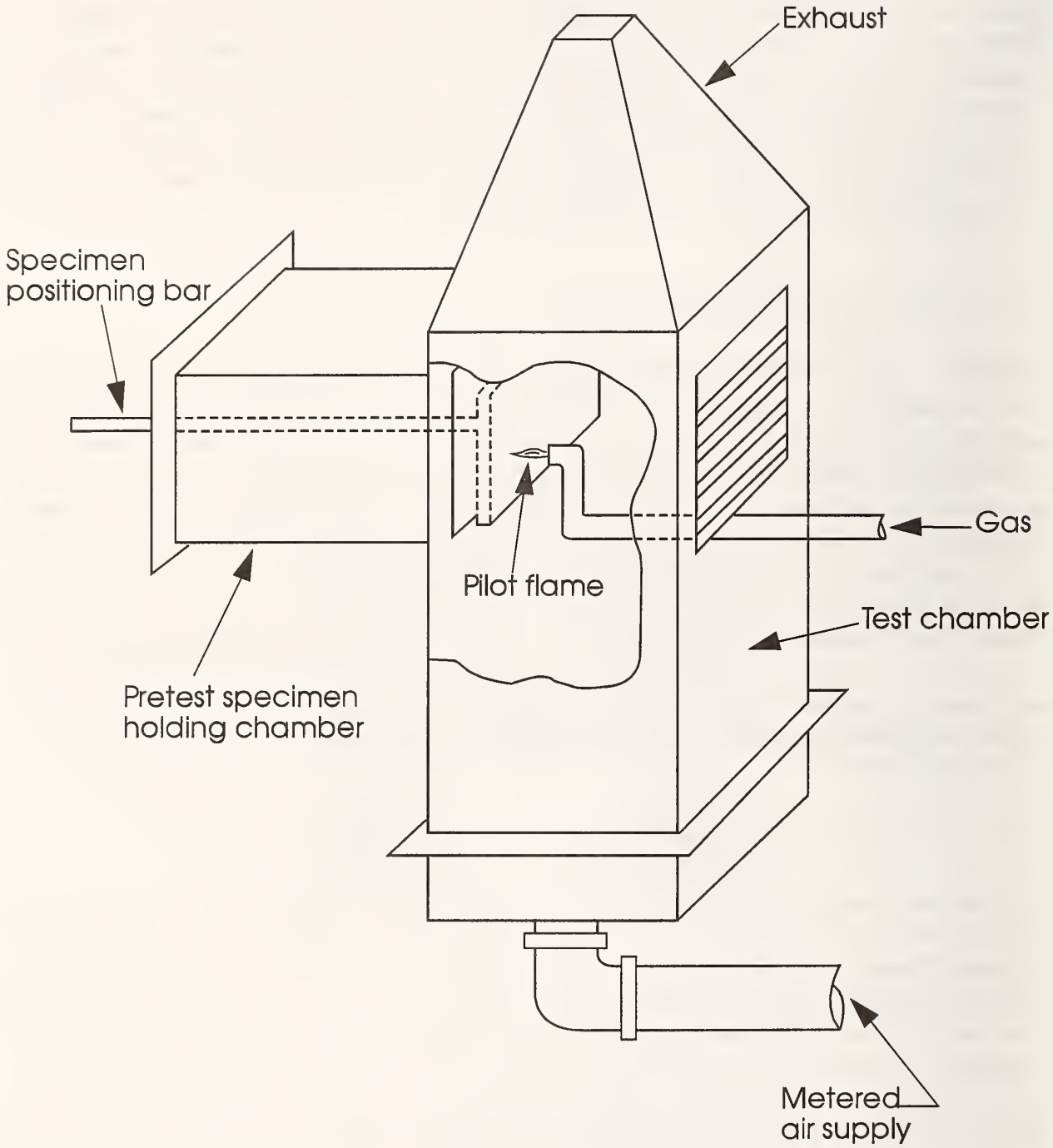

Figure 14. The OSU Calorimeter Test.

4.3.3.4 Heat Conduction – FAR 25.853 Appendix F Part III (14 CFR Part 25)

This test is used to determine heat transferred by noncombustibles as determined by DIN 4102, Part 1. A frame holds a candidate ceiling and wall material in place as an upper corner of a room. A gas burner that puts a very severe 91 kW/m^2 flux on the ceiling panel is used. The burner is placed 200 mm below the ceiling panel and 51 mm away from the wall panel. A thermocouple is placed 100 mm above the ceiling panel centered on the burner. The tests are run for five minutes. To pass, neither the ceiling nor the wall panel can burn though and the thermocouple can not read above 400 °C.

4.3.3.5 Ignition Resistance – UIC Code 564-2

UIC Code 564-2, Appendix 4 [116] is an alcohol burner test similar to the Bunsen burner test in FAR 25.853 Appendix F, Part I [69] (Figure 16). The BOStrab includes a test from UIC 564-2 to determine the fire resistance of seats. Either the actual seat or a mockup with seat pan and back having dimensions of 0.4 m x 0.4 m is used in the test. A pillow of 100 g of newspaper is made by folding in half and stapling closed one sheet with the rest crumpled in balls inside. The pillow is placed in the pan so one of the long edges is against the back. All four corners are set on fire and observations are made every 30 sec. To pass the test, the seat must go out within ten minutes of the start of the test, and no part of the seat is allowed to fall off. This test does not consider the interaction between a burning seat and adjacent seats or wall panels found in an actual train that may ignite and accelerate the spread of fire.

4.3.3.6 Fire Endurance Tests – DIN 4102 Parts 2 and 4

DIN 4102 part 2 (for support structures) [117] and 4art 5 (for fire barriers) [118] are both variations on the fire endurance test (ASTM E 119) used in the United States [66]. Fire barriers are defined as automatic closing barriers such as doors, shutters, etc. Like ASTM E 119, the test structure is subjected to a furnace exposure with a set time-temperature curve. The significant difference from ASTM E 119 is the addition of an impact test. Three minutes before each certification time, walls are subjected to the impact of a steel ball with a force of 20 N-m (15 ft-lb). DIN 4102 Part 5 differs in that a mechanical barrier must be opened and closed 5000 times before the actual furnace test. Both tests require that the temperature on the side away from the furnace must average no more than 140 °C above ambient.

4.3.3.7 ATS 1000.001 Section 7.2

ATS 1000.001 Section 7.2 specifies the use of ASTM F-814 with a criterion of $D_s \leq 150$ in four minutes. In the context used, ASTM F-814 is identical to Smoke Density Chamber, ASTM E 662.

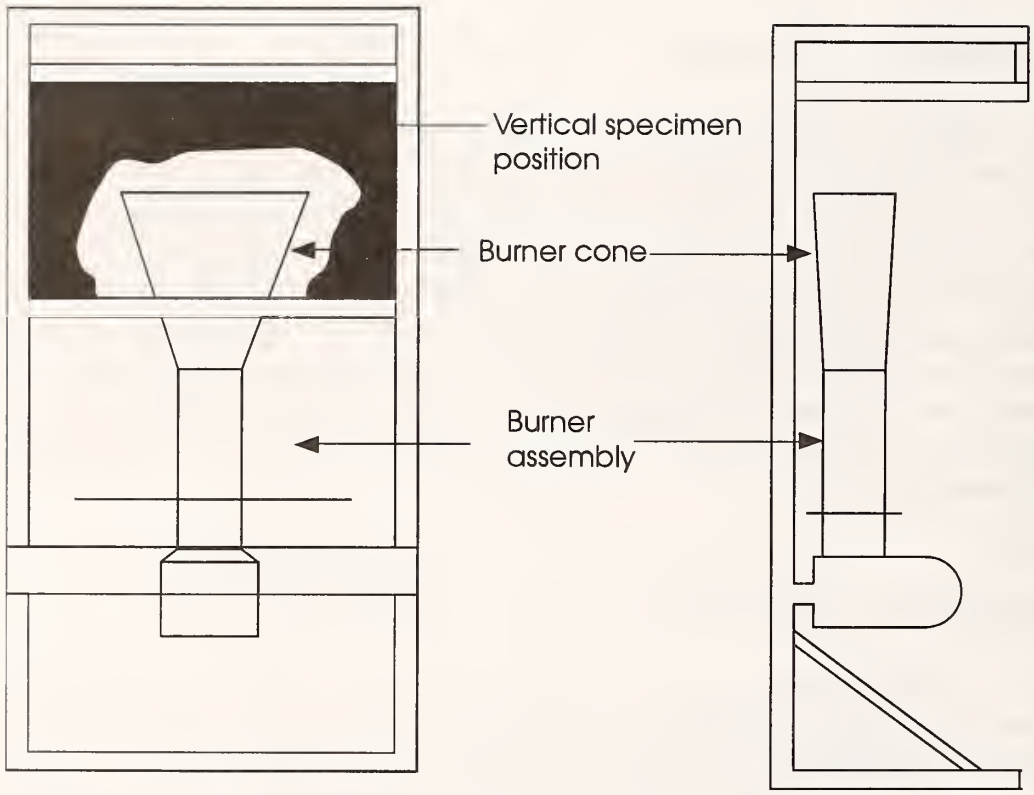

Figure 15. The FAR 25.853 Heat Conduction Test.

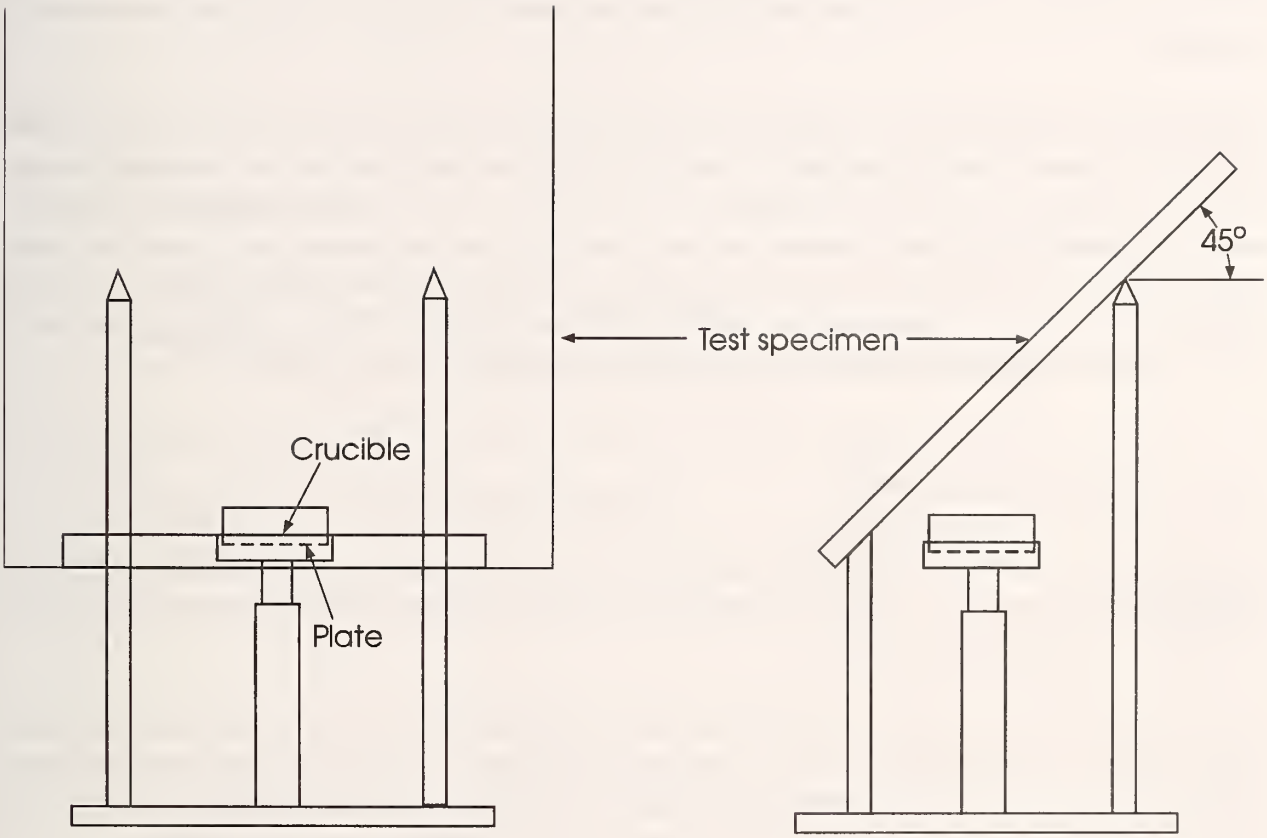

Figure 16. The UIC 564-2 Ignition Resistance Test.

4.3.3.8 Toxicity Requirements

German toxicity requirements are included in the tests for a class A material under DIN 4102 and use DIN 53436 Parts 1-3 [119]. Like the NBS cup furnace method, this test exposes rats to cooled decomposition products. The combustion system, however, is quite different, using a 1000 mm long quartz tube maintained at selected temperatures with a moving annular tube furnace. Decomposition, taking place in an air stream countercurrent to the direction of furnace travel, is intended to result in the continuous flow of fire effluent of constant composition. The COHb levels in the rats' blood are measured along with the exposure concentrations of CO, CO_2, and O_2. The rats are observed for 14 days post-exposure as they are in the NBS method. According to the standard, toxicity is not allowed to "raise objections." It is not clear how this term translates into objective criteria for acceptance of a material.

Specimens may undergo either flaming or non-flaming combustion, depending on the imposed heat flux and presence of an ignition device. Some difficulty has been observed in controlling flaming conditions although this has been somewhat resolved [120]. No specimen weight loss measurement is included. The method can accommodate a range of controlled ventilation and heat flux exposure conditions. Several references are available on the validity of the method applied to hazard analysis [121], [122]. However, they only discuss the ability of the test apparatus to simulate observed fire conditions and do not provide any comparisons with real-scale fire tests.

4.3.4 Communication Systems

DIN 5510 Part 6 covers "information systems" to provide passengers with appropriate guidance in the event of an emergency. Only the inadvertent operation of the emergency brake during a fire emergency is specifically included.

The BOStrab requires reliable two-way communication between the crew of a train and the central control point. The RW MSB makes a stronger requirement of two independent communication installations for contacting the operational control center. Further, actuating devices which can be used by passengers to inform the crew of an emergency are required by both standards.

4.3.5 Fire Detection and Suppression Systems

Fire detection and suppression are addressed in DIN 5510, Part 6 [123]. Fire alarms which are independent of overhead power and which report to the driver are required on fire protection class four vehicles. Portable extinguishers are also required in passenger cars and control cabs (passenger use extinguishers must be suitable for electrical fires). Fixed extinguishing systems are specified for special hazard areas.

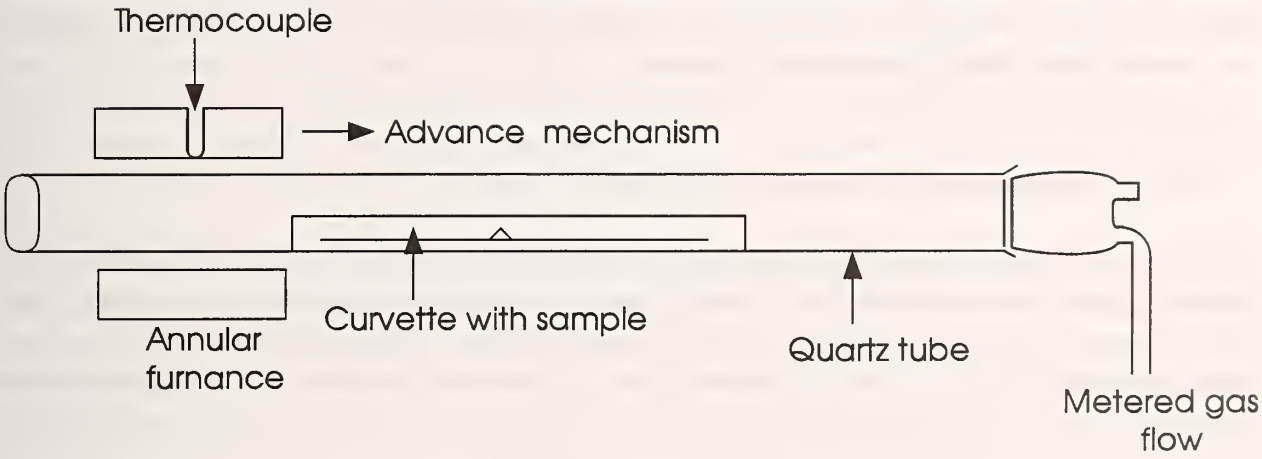

Figure 17. The DIN 53436 Toxicity Furnace Test.

4.3.6 Emergency Egress and Access

The German regulations pay significant attention to evacuation in DIN 5510, Part 1 and in Chapters 11 and 12 of the RW MSB. Because of the elevated trackway in a maglev system, it is considered impractical to evacuate the train other than at a station or designated stopping point (the parallel is made to aircraft that cannot be evacuated until they can make an emergency landing). Systems are designed to allow "hovering" to be maintained at least long enough to move the train to a stopping point located at intervals consistent with the vehicle's hovering range. Since this will take some time, these regulations also implement the concept of "horizontal evacuation" as is used in high rise building fire safety. That is, passengers or crew at risk are moved to adjacent cars where the compartmentation requirements (30 min fire resistance) create a safe area in which to wait until they can be evacuated. As a backup, escape ropes or slides are also specified.

Preplanning for evacuation and rescue is addressed in chapter 12 of the RW MSB. Requirements are that plans should be developed which identify responders, hospital locations, access roads, and even the construction of landing sites for helicopters.

4.4 Future Developments in Europe

It should be noted that all of the current European national test methods are being replaced by ISO methods as part of the harmonization of testing standards for the European Community (EC). This will make some of the standards discussed in this report obsolete. This section provides an overview of the progress in Europe towards this harmonization to place the currently used standards in proper context.

In 1985, the Commission of the European Community presented a program for "completing the internal market" among the member states by the end of 1992 [124]. This was formalized by the EC Council of Ministers in 1986 as the Single European Act. Completing the internal market is a term for the activities associated with eliminating barriers to trade that presently exist among the member states. However, such free trade would not be fully meaningful if products, once freely imported, could not be legally used for their intended purpose. Such restrictions on use could occur if the test standards or the required health and safety measures in one member state were different from those in another (test standards not related to health and safety are generally not an issue, since they do not represent mandatory government actions). To harmonize such standards, the EC has issued a number of directives, pertinent to different areas of commerce. Of relevance to fire safety is the Construction Products Directive [125] which provides general "Essential Requirements":

> "The construction works must be designed and built in such a way that in the event of an outbreak of fire:

- the load-bearing capacity of the construction can be assumed for a specific period of time,
- the generation and spread of fire and smoke within the works are limited,
- the spread of fire to neighboring construction works is limited,
- occupants can leave the works or be rescued by other means,
- safety of rescue teams is taken into consideration."

The Directive itself does not specify the new standards. Instead, the needed standards for fire safety (as for all other areas) are to be developed by a technical committee of CEN (Comité européen de normalisation). In this development process, CEN is mandated by the EC Commission to utilize, wherever possible, appropriate existing ISO (International Organization for Standardization) standards, and to develop new test methods only as a last resort.

It was realized in a number of countries that the most important of the engineering tests needed had already emerged from ISO: the ISO 9705 full-scale room/corner test and the ISO 5660 bench-scale test for heat release. The latter is the Cone Calorimeter, developed at NIST [126] and known in the United States as ASTM standard E 1354. The former does not have a direct U.S. analogue, but is similar in concept, although not in details, to a room fire test [127] which was proposed in draft form by ASTM in 1982, but never finalized or approved.

The results of the research program (the EUREFIC program) to develop appropriate comparisons among the various national standards and the newer-generation heat release rate tests were presented in a seminar held in Copenhagen on September 11-12, 1991. In conjunction with the seminar, a book of proceedings was issued [128] which summarizes the findings in each of the study areas. The benchmark test used for wall and ceiling linings in this program is the ISO 9705 room/corner test. Since this is a full-scale fire test, using a plausible fire scenario internationally agreed upon by experts, it is intrinsically valid. The key measured variable is time-to-flashover (for products where flashover occurs). Other quantitative variables include the heat release rate and the production of smoke.

For most products, real-scale testing will be unnecessary and bench-scale tests using the Cone Calorimeter can be used. Certain classes of products (for instance, ones showing a propensity to collapse prior to burning) are not appropriately assessed in bench scale and will be required to be tested in the full-scale room/corner test. One of the most important aspects of the EUREFIC study was the demonstration that a good bench-scale/full-scale relationship exists.

5. Comparison of Current Approaches

This chapter compares the U.S. requirements (Chapter 3) and those applied in Europe (Chapter 4). This comparison is intended to point out differences in both emphasis and methods of performance appraisal. Recommendations based on this comparison are presented in chapter 6.

5.1 Motive Power Unit and Passenger Car Design

The overall German approach includes more stringent requirements on vehicle design than other countries, and limiting the location of wiring, equipment, and controls within the walls of passenger spaces to those necessary for lighting, emergency control, or communication. This places the bulk of the train equipment below the vehicle where stringent separation requirements are implemented.

In the United States, similar design goals are more limited. NFPA 130 requires that rail transit vehicles be designed to arrange equipment external to the passenger compartment in order to isolate potential ignition sources from combustible material and to control fire and smoke propagation. Where it is necessary to install equipment in passenger cars, suitable shields or enclosures must be provided to isolate the equipment from the passenger compartment. FRA requirements in 49 CFR Part 229, FRA guidelines, and Amtrak specifications include requirements for protection of structural flooring to prevent penetration from an undercar fire and allow for passenger evacuation.

French design requirements are limited to interior partitions to limit the spread of fire and separations to protect electrical or heat producing parts.

5.2 Material Controls

Table 11 summarizes the major flammability and smoke emission test requirements in the United States, France, and Germany. Table 12 presents the comparisons in detail along with acceptance criteria for each test method. Bench-scale test methods are rarely interchangeable [26]. Direct comparison of individual requirements from the three countries discussed above is especially difficult due to the dramatically different philosophies of the requirements. The U.S. requirements are prescriptive in nature and apply to specific materials without consideration of interrelationships between materials during a fire. By contrast, the German requirements provide a simple performance goal with several prescriptive test methods to judge adherence to the goal. In between these two is the French requirements with a lofty goal of assessing risk, but with a confusing range of acceptance for each individual

Table 11. Summary of Major Test Methods Used for Passenger Train Material Selection in the United States, France, and Germany

Country	Test Method	Non-combustibility test	Flame Spread Test	Smoke density test	Small-fire ignition test	Fire endurance test	Heat release rate test
United States			♦	♦	♦	♦	
	ASTM E-162		♦				
	ASTM E-662			♦			
	ASTM E-119					♦	
	FAR 25.853				♦		
France		♦	♦	♦	♦		
	NF P 92501	♦	♦				
	NF P 92503		♦				
	NF P 92504				♦		
	NF P 92505				♦		
	FF X 70100			♦			
Germany		♦		♦	♦	♦	♦
	DIN 4102 part 1	♦		♦		♦	
	FAR 25.853	♦					♦
	UIC 564-2				♦		
	ASTM F-814			♦			

Table 12. A Comparison of U.S., German, and French Material Flammability Requirements[a]

		U.S. Requirements		German Requirements		French Requirements	
Category	Function of Material	Test Procedure	Performance Criteria	Test Procedure	Performance Criteria	Test Procedure	Performance Criteria
Passenger seats, sleeping and dining car components	Cushions, mattresses	ASTM D-3675	$I_s \leq 25$	DIN 4102 part 1	Class A	NF P 92501 to NF P 92510	see Table 7
				FAR part 25.853 Appendix F part III	HR < 65 kW/s HRR < 65 kW/m^2		
				UIC Code 564-2	Flame time ≤ 10 s Burn area ≤ 150 cm^2		
	Seat frames, mattress frames	ASTM E-162	$I_s \leq 35$	DIN 4102 part 1	Class A	NF P 92501 to NF P 92510	see Table 7
				FAR part 25.853 Appendix F part III	HR < 65 kW/s HRR < 65 kW/m^2		
				UIC Code 564-2	Flame time ≤ 10 s Burn area ≤ 150 cm^2		
	Seat and toilet shroud, food trays	ASTM E-162	$I_s \leq 35$	DIN 4102 part 1	Class A	NF P 92501 to NF P 92510	see Table 7
				FAR part 25.853 Appendix F part III	HR < 65 kW/s HRR < 65 kW/m^2		
				UIC Code 564-2	Flame time ≤ 10 s Burn area ≤ 150 cm^2		
	Seat upholstery, mattress ticking and covers, curtains	FAR 25.853 (vertical)	Flame time ≤ 10 s Burn length ≤ 6 in	DIN 4102 part 1	Class A	NF P 92501 to NF P 92510	see Table 7
				FAR part 25.853 Appendix F part III	HR < 65 kW/s HRR < 65 kW/m^2		
				UIC Code 564-2	Flame time ≤ 10 s Burn area ≤ 150 cm^2		

a Due to differing requirements in Germany and France, these categories are similar, but not identical to those in the FRA guidelines.
b Shaded areas indicate no requirement for the material class
c Amtrak requirement is C.R.F. ≥ 0.6 W/cm^2
d NFPA 130 only
e Amtrak requirement is $I_s \leq 35$

Table 12, continued. A Comparison of U.S., German, and French Material Flammability Requirements

		U.S. Requirements		German Requirements		French Requirements	
Category	Function of Material	Test Procedure	Performance Criteria	Test Procedure	Performance Criteria	Test Procedure	Performance Criteria
Panels	Wall, ceiling, partition, tables and shelves, windscreen, HVAC ducting	ASTM E-162	$I_s \leq 35$	DIN 4102 part 1	Class A	NF P 92501 to NF P 92510	see Table 7
				FAR part 25.853 Appendix F part IV	$T_{ig} < 204$ °C		
				FAR part 25.853 Appendix F part III	HR < 65 kW/s HRR < 65 kW/m^2		
				UIC Code 564-2	Flame time ≤ 10 s Burn area ≤ 150 cm^2		
	Window, light diffuser	ASTM E-162	$I_s \leq 100$	DIN 4102 part 1	Class A	NF P 92501 to NF P 92510	see Table 7
				FAR part 25.853 Appendix F part III	HR < 65 kW/s HRR < 65 kW/m^2		
				UIC Code 564-2	Flame time ≤ 10 s Burn area ≤ 150 cm^2		
Flooring	Structural	ASTM E-119	nominal evacuation time, at least 15 min	DIN 4102 part 2	at least 30 min		
	Covering	ASTM E-648	C.R.F. ≥ 0.5 w/cm^2 [c]	DIN 4102 part 1	Class A	NF P 92501 to NF P 92510	see Table 7
		ASTM E-162 [d]	$I_s \leq 25$	FAR part 25.853 Appendix F part III	HR < 65 kW/s HRR < 65 kW/m^2		
				UIC Code 564-2	Flame time ≤ 10 s Burn area ≤ 150 cm^2		

a Due to differing requirements in Germany and France, these categories are similar, but not identical to those in the FRA guidelines.
b Shaded areas indicate no requirement for the material class
c Amtrak requirement is C.R.F. ≥ 0.6 W/cm^2
d NFPA 130 only
e Amtrak requirement is $I_s \leq 35$

Table 12, continued. A Comparison of U.S., German, and French Material Flammability Requirements

		U.S. Requirements		German Requirements		French Requirements	
Category	Function of Material	Test Procedure	Performance Criteria	Test Procedure	Performance Criteria	Test Procedure	Performance Criteria
Structural Support	Ceilings, walls, columns	ASTM E-119	as appropriate	DIN 4102 part 2	at least 30 min		
	Load bearing and non-load bearing fire walls	ASTM E-119	as appropriate	DIN 4102 part 2	at least 30 min		
				FAR part 25.853 Appendix F part III	HR < 65 kW/s HRR < 65 kW/m^2		
	Doors, shutters, gates, etc.			DIN 4102 part 2	at least 30 min		
				FAR part 25.853 Appendix F part III	HR < 65 kW/s HRR < 65 kW/m^2		
Insulation	Thermal, acoustic	ASTM E-162	$I_s \leq 25$ [d]			NF P 92501 to NF P 92510	see Table 7
Elastomers	Window gaskets, door nosing, diaphragms, roof mat	ASTM C-542	Pass	DIN 4102 part 1	Class A	NF P 92501 to NF P 92510	see Table 7
				FAR part 25.853 Appendix F part III	HR < 65 kW/s HRR < 65 kW/m^2		
				UIC Code 564-2	Flame time ≤ 10 s Burn area ≤ 150 cm^2		
Exterior Plastic Components	End cap roof housings	ASTM E-162	$I_s \leq 35$			NF P 92501 to NF P 92510	see Table 7

a Due to differing requirements in Germany and France, these categories are similar, but not identical to those in the FRA guidelines.
b Shaded areas indicate no requirement for the material class
c Amtrak requirement is C.R.F. ≥ 0.6 W/cm^2
d NFPA 130 only
e Amtrak requirement is $I_s \leq 35$

Table 12, continued. A Comparison of U.S., German, and French Material Flammability Requirements

		U.S. Requirements		German Requirements		French Requirements	
Component Box Covers	Interior, exterior boxes	ASTM E-162	$I_s \leq 35$			NF P 92501 to NF P 92510	see Table 7
Energy Systems	Battery cabling			DIN 4102 part 1	Class A	NF P 92501 to NF P 92510	see Table 7
				FAR part 25.853 Appendix F part III	HR < 65 kW/s HRR < 65 kW/m^2		
				UIC Code 564-2	Flame time ≤ 10 s Burn area ≤ 150 cm^2		
	Battery cases and battery containers			DIN 4102 part 1	Class A	NF P 9250I to NF P 92510	see Table 7
				FAR part 25.853 Appendix F part III	HR < 65 kW/s HRR < 65 kW/m^2		
				UIC Code 564-2	Flame time ≤ 10 s Burn area ≤ 150 cm^2		
				DIN 4102 part 2	at least 30 min		

a Due to differing requirements in Germany and France, these categories are similar, but not identical to those in the FRA guidelines.
b Shaded areas indicate no requirement for the material class
c Amtrak requirement is C.R.F. ≥ 0.6 W/cm^2
d NFPA 130 only
e Amtrak requirement is $I_s \leq 35$

material. Nearly all the requirements are based on bench-scale test methods. In this section, a review of the characteristics of any bench-scale test method necessary for scientific credibility is presented. With these characteristics in mind, the comparison of individual tests can be put in perspective.

5.2.1 Purpose of Bench-Scale Test Methods

In general, bench-scale tests can be used to serve at least three different purposes:

- quality control assurance in manufacturing,
- guidance in product development, and
- prediction of expected real-scale behavior.

Tests for quality control assurance traditionally constituted a very large family of tests. Here, the requirements are that such tests must be sensitive to small variations in the specimen's physical or chemical properties, be repeatable, simple, and inexpensive to conduct. It is important to note that stringent rules of validity are not required for tests to meet these objectives. A looser requirement for validity is merely that most production-line changes which could affect flammability of the specimen should be reflected by a change in test results. Tests for guidance in product development can vary greatly and do not, in principle, need to be standardized at all, since they are to be used only internally within an organization.

Tests for prediction of expected real-scale behavior, clearly the intended purpose for the flammability requirements for passenger guided ground transportation vehicles, are the most difficult to develop. The tests of the 1950's or the 1960's were applied to full-scale fires typically not by any quantitative understanding of the full-scale fire, but by merely asserting that a certain test shall be deemed usable in this context. These tests include nearly all of the tests used in passenger guided ground transportation.

There are two ways that fire tests can be designed and utilized to meet the objective to predict real-scale fire behavior. The first is a fully rigorous determination of material fire properties by specific tests, then the actual prediction of fire performance by a computer simulation of the room fire. Computer predictive methods are expected to assume ever-increasing importance for design applications; however, such applications are still not common. This approach will be addressed in section 5.7 of this report.

The second approach, while less rigorous, is one that can be used today. It is founded on predictive equations which are partly physics-based and partly based on data correlations. The steps required to produce such a correlation [129], [130] can be summarized:

- Identify the governing physical and chemical principles of the phenomenon to be measured.
- Design a candidate bench-scale test using these principles.
- Identify the range, best to worst, of relevant full-scale product behaviors and assemble specimens having those expected traits.
- Assemble a database by testing this range of specimens at full-scale, and gather data using instruments appropriately designed to measure the governing physical and chemical phenomena.
- Conduct bench-scale tests, varying those features of fire behavior which cannot be assigned known constant values.
- Attempt to correlate the bench-scale results against the full-scale database not only by ranking, but also for quantitative values.
- Select those bench-scale test protocol features which lead to the best correlation with the full-scale data.

5.2.2 Noncombustible Materials

The United States, France, and Germany all have test methods to define noncombustible materials. The tests are similar in principle and provide similar ranking for materials, although details differ between the tests. In a true fire-engineering sense the word "noncombustibility" would be just as inappropriate as the term "fireproof" is today. Nonetheless, the term is widely used in building codes to indicate a material which, under certain test conditions, fails to ignite or support fire growth. The provisions in various countries and jurisdictions vary; the majority, however, are based on a "noncombustibility" test. In North America, the most common such test is ASTM E 136 [131]. Some years ago, ASTM did decide that "noncombustibility" was a misleading name, and so changed the name of E 136 from its original "Standard Test Method for Noncombustibility of Elementary Materials" to its present name "Standard Test Method For Behavior of Materials in a Vertical Tube Furnace at 750 °C." The test principle, however, was not altered. The method is similar in concept, although not in details, to ISO 1182 [132] and the nearly identical DIN 4102, Part 1. Both the ISO and the ASTM methods equip a small specimen with several thermocouples, then insert it into a hot furnace. A differential temperature rise of more than the allowed amount is the primary failure criterion.

Noncombustibility (and other "degrees of combustibility" measures) is thus based on a pass/fail determination. The results of such determinations are of very small value in *quantifying* the behavior of a fire. Thus, in applications where "noncombustibility" is sought, the real objective is a stringent

limit on the heat release rate. It is expected that the ISO 1182 method will eventually be replaced with appropriate limits on heat release rate. Although this is not likely to happen quickly, significant advantages are apparent. Non-homogeneous specimens can be properly tested, and quantitative data obtained which provide needed information for the design effort of the fire engineer.

Babrauskas, Urbas, and Richardson [133] reviewed data from several laboratories to test the applicability of heat release rate measurements to provide equivalent classification as current test methods for "noncombustibility." In general, they conclude that all the tests provide similar, though not identical ratings of materials and that criteria could be set based on heat release rate testing to classify current materials.

5.2.3 Flammability

The primary measure to judge the equivalence of the U.S., French, and German approaches to material flammability is a comparison of the primary tests used in each country. In the United States, this test is ASTM E 162/D 3675; in France, NF P 92501-NF P 92503; and in Germany, a combination of DIN 4102 part 1, the OSU calorimeter, and UIC Code 564-2. ASTM E 162/D 3675 and NF P 92501 are similar radiant panel tests with comparable heat flux exposures on the specimen. Although different in intent (the U.S. test is a flame spread test, and the French test is primarily an ignition test), these tests can be expected to provide similar ranking of materials. With the wide array of acceptance criteria in the French standards, an exact comparison of the pass-fail criteria is impossible. Litant [26] puts the French requirements in context in a discussion of the comparability of the U.S. and French requirements. He concludes that the French standards do not provide an improvement over the U.S. fire safety requirements. Furthermore, the French regulations use these standards in a "most complicated and contrived manner." Although the German requirements do not include a radiant panel test, a heat release rate test is included for all materials. Such a test provides a better indicator of fire performance than the bench-scale radiant panel tests. In addition, the German standards prefer a material to be considered "noncombustible" which further limits it peak heat release rate. The German requirements provide a stricter requirement which should better predict real-scale fire behavior.
For floor coverings, both the U.S. and French requirements include a radiant panel test. Although test details differ, the heat flux exposure in the French requirement is nearly one half the exposure in the U.S. requirement (3.5 kW/m^2 versus 6 kW/m^2). The U.S. requirement should provide a stricter rating criteria. The German requirements do not include a specific test for floor covering; it is treated identically to other interior lining elements.

Notably missing from the German requirements is a testing requirement for insulation. Although typically used in unexposed locations, it can contribute significantly to fire growth once exposed. Such a test should be included since such materials have been significantly involved in actual fire incidents in passenger guided ground transportation vehicles.

The remaining flammability requirements are mostly based on small-burner tests which have been shown to provide little or no capability to predict actual fire behavior. Most of these tests provide a measure of resistance to ignition by a small ignition source and little else.

Most important in all three approaches is the dependence on outdated bench-scale test methods. For most of the tests, considerable evidence questions their ability to predict real-scale fire behavior. Advances in fire safety engineering have been made in the decade since the original development of the current U.S. guidelines for material selection for passenger trains. Better understanding of the underlying phenomena governing fire initiation and growth have led to the development of a new generation of standard test methods which can better predict the real-scale burning behavior of materials and assemblies from bench-scale measurement methods based on a material's heat release rate.

5.2.4 Fire Endurance

Both the United States and Germany include requirements for large-scale fire endurance testing. In the United States, ASTM E 119 is used; in Germany, the equivalent method is specified in DIN 4102, parts 2 and 5. Both are large-scale furnace tests with nearly identical time-temperature requirements for the furnace. In Germany, the requirements clearly apply to wall partitions (DIN 4102, part 2) and are likely to include floors and ceilings as part of a requirement for support structures such that "a breakdown of stability due to burn damage or heating and a transmission of fire is prevented or at least adequately delayed." The minimum test duration in the German requirements is twice that included in the U.S. guidelines.

In testing large-scale fire endurance, the German requirements are clearly more severe, with the requirements applicable to floors, ceilings, and wall partitions, along with a test duration double the U.S. requirement. French requirements for fire endurance are limited requiring only that partitions which separate high voltage electrical or heat-producing parts, and the ends of cars must exhibit a 15 min fire resistance.

5.2.5 Smoke Emission

Smoke emission tests in the three countries are all based on variants of the same smoke density measurement apparatus using small samples in a static environment. In the United States and France, the Smoke Density Chamber is used. In Germany, an early variant of this device, the XP2 apparatus is specified. In addition, a variant of the apparatus, ASTM F-814, is used. In the context of use, it is identical to ASTM E 662. Acceptance criteria for the test is stricter in Germany than in the United States or France.

However, these tests have been shown to provide little indication of actual fire behavior. Like the tests for flammability, it has become apparent over the last ten years that smoke can be best measured in a dynamic test which best simulates actual end-use burning behavior. Requirements for a bench-scale test to measure smoke have been proposed in [134], [135]:

- Measure fire properties in such a way that they can be used for purposes other than simple rankings or pass/fail criteria.

- Measure smoke obscuration together with those fire properties of considerable fire hazard interest, principally the rate of heat release.

- Utilize tests which have proven to give results that are representative of the corresponding property in real-scale.

- Allow for calculations to compensate for complete sample consumption, characteristic of bench-scale tests.

The only tests in existence which fulfill these requirements are those based on heat release rate calorimetry. Hirschler [135] concludes that the best way to measure smoke obscuration in a meaningful way for real-scale fires is to use a bench-scale heat release rate test such as the cone calorimeter [136] (or the OSU calorimeter [137]) with compensation for incomplete burning of materials in a bench-scale test. He finds good correlation with real-scale fires for a range of materials.

5.2.6 Toxic Potency

Most fire researchers have accepted the animal exposure system and the chemical analysis systems used in the U.S. and German test methods as being appropriate for assessing the acute inhalation toxicity of materials. The main issue with regard to smoke toxicity test methods has been the combustion systems. Certainly, no one test procedure can simulate all possible fire scenarios. Most researchers now agree that:

- The combustion system should thermally decompose materials under more likely end-use conditions. These include radiant heating and decomposition of materials, products, composites, and assemblies.

- The system should allow for the testing of larger sample sizes than previously possible in the cup furnace and in some tube furnaces (for example, the cup furnace test procedure recommended sample sizes no larger than 8 g although larger sizes were successfully tested).

- The fire scenario should simulate the conditions under which the greatest number of human lives are lost, namely post-flashover.

The National Materials Advisory Board (NMAB) has recently studied toxicity in application to rail transit vehicles [138]. The report recommends that the selection of candidate materials for use in these types of vehicles should be made following analysis of the material's fire properties and smoke toxic potency, within the context of a hazard analysis using specific plausible fire scenarios. Concern is also expressed in using a single laboratory combustion device for all materials to assess toxic potency under all fire conditions. According to the NMAB report, laboratory measurements may need to be adjusted for use in hazard calculations.

5.2.6.1 Development of Toxic Potency Measurement Methods

During the 1970's, there was a distinct increase in the fire research effort being expended in the United States to study fire toxicity. Initially, various aspects of toxicity were being examined, such as incapacitation preventing an animal from performing a simple motion. The spectrum of ill effects from toxic substances is large, however, ranging from discomfort or impairment of judgement at one end to lethality at the other. For assessing combustion products, it was eventually agreed that lethality is an unambiguous endpoint which can be examined without undue subjectivity. Thus, combustion toxicity tests have generally focused on measuring *toxic potency*[5] as defined by the LC_{50}, which is the mass of combustion products needed to cause lethality to 50% of a set of test animals exposed to the smoke for a specified time.

The need for a small-scale laboratory procedure to ascertain the toxic potency of the combustion products from materials was revealed in a scientific paper in *Science* in 1975 [139]. This research by Petajan et al., showed that the combustion products from an experimental fire-retarded rigid polyurethane foam caused grand mal seizures and death in rats, while the same foam without the fire-retardant did not produce any abnormal neurological effects. The toxicity of the combustion products from the fire-retarded foam was attributed to the formation of a particular bicyclic phosphate ester in the smoke. This result raised an alarm about the possible presence of "supertoxicants" in smoke from burning or smoldering materials. Since the presence of this bicyclic phosphate ester would not have been detected by ordinary chemical analysis of the smoke, this paper also emphasized the need for animals as the measurement "instruments." Many laboratories had pursued the chemical

---

[5] *Toxic potency*: toxicity of the smoke from a specimen of material or product, taken on a per-unit-specimen-mass basis. At present, for fire research, the dominant biological end point adopted is death; and the measured quantity is the LC_{50}, which is the concentration ($g \cdot m^{-3}$) of smoke which is lethal to 50% of the exposed specified test animals in a specified time period. The LC_{50} notation must include the exposure time, generally 30 minutes (along with a 14-day post-exposure observation period). **Toxic potency is not an inherent property of a material.**

approach and had published extensive lists of chemical compounds found in the combustion atmospheres of materials thermally decomposed under different conditions. A summary of the literature on the combustion products and smoke toxicity from seven plastics indicated over 400 detected compounds [140]. Since the toxicity of all of those compounds was not known nor was the toxicity of the mixed atmospheres known, the need for a combined biological and chemical approach was obvious. The observation of adverse effects in rodents would indicate the presence of unusual toxicants or synergistic effects of combined toxicants that might not be discovered by routine chemical analysis alone.

World-wide concern about the toxicity of combustion products was indicated by the many laboratories which developed smoke toxicity test methods in the 1980's. At least 20 such methods were described in 1983 [141]. At about the same time, 13 published methods were evaluated to assess the feasibility of incorporating combustion toxicity requirements into the state of New York building material and furnishing codes [142]. On the basis of seven different criteria, only two methods — the closed-system cup furnace smoke toxicity method developed at the National Bureau of Standards and the flow-through smoke toxicity method developed at the University of Pittsburgh — were found acceptable. The state of New York decided to use the method ("UPitt") developed at the University of Pittsburgh [143]. Since it was unclear how to use the results of toxicity testing in regulation, the state of New York requires only that materials be examined with the UPitt protocol and that the results be filed with the state.

In a separate regulation, New York City has also adopted toxicity requirements as part of its building code. The code requires that combustion products not be more toxic than wood. Since wood is not a product of specific composition or fire behavior, New York City uses an "average" wood, corresponding to the LC_{50}s of several different species tested in the UPitt method and then averaged. A number of other states also announced their intentions to regulate in this area; however, this has not yet come about.

Four smoke toxicity measurement procedures were eventually proposed to ASTM. These included the cup furnace method, the UPitt method, and two others which were somewhat less commonly used – the University of San Francisco "Dome Chamber" test [144] and the original radiant heat test, developed at Weyerhaeuser [145]. None of the four proposed methods have been accepted; an ASTM standard smoke toxicity test method does not currently exist.

The latter two methods were not accepted as standard test methods by ASTM because they were in limited use. With the Dome Chamber, serious toxicological reservations were raised about a method which only measures *time* to various incapacitation effects (such as collapse) or to death, and does not evaluate actual product toxic potency. The Weyerhaeuser test was rarely used, largely because certain mechanical aspects were felt lacking in robustness.

Both the cup furnace and the UPitt methods had achieved rather widespread use in the United States, yet certain reservations remained. Primary issues were that neither method was believed to

adequately represent the combustion environment occurring in actual building fires. Also, it was felt that data validating the results of these tests against real-scale fires were scant. As more materials were examined in these systems, it became evident that the number of products generating "supertoxicants" was small. Indeed, most of the toxicity of combustion atmospheres could be explained by the main toxic combustion gases (e.g., CO, CO_2 HCN, HCl, and reduced O_2), and that one rarely had to worry about minor or obscure components [146], [147], [148], [149].

There has also been significant discussion concerning the potential misuse of toxicological data. The concern was that if **any** method for obtaining toxic potency data alone were approved, it might become a new determinant for the acceptability of products. As a result, two criteria were seen as key to the acceptability of a new method:

- the combustion conditions would appropriately represent real-scale fires, and the method could be validated to demonstrate its success in predicting the real-scale fire; and

- a technique was in place, as part of the proposed method or separately, for assembling enough needed data so that a credible fire hazard assessment could be made.

To satisfy these two criteria, development of three new methods was pursued. Professor Alarie at the University of Pittsburgh undertook to design "UPitt II," which would use the well-validated combustion system of the Cone Calorimeter, instead of the box furnace used in the older UPitt test. The resulting method has been recently published [150]. The method is costly and difficult to install. Operational difficulties are similar to those which were earlier encountered by NIST in an exploratory study on an attempted coupling of a conical-heater type of combustion system to the animal exposure system used with the cup furnace method [151]. Partly because of these reasons, the fire safety community has not shown interest in this development.

The second method was proposed by the National Institute of Building Sciences (NIBS) when it established a project on combustion toxicity in 1982. After a 1986 conference [152] suggested the need for a "performance test method" for combustion toxicity, NIBS commissioned test development work to be conducted by the Southwest Research Institute (SwRI). The fundamental principles of the method were described in the 1988 NIBS conference [153], [154]. After some further development work and public comment, the method was submitted to ballot at ASTM in March 1991 and was nearing final consideration in late 1993.

5.2.6.2 Toxic Potency Measurement for Fire Hazard Analysis

A third method, proposed by Gann, et. al., is shown in Figure 18 [155]. They recommend that needed toxic potency data be obtained using a radiant apparatus. This device is the first to be validated against data from real-scale fires. It is a descendant of the cup furnace and the Weyerhaeuser

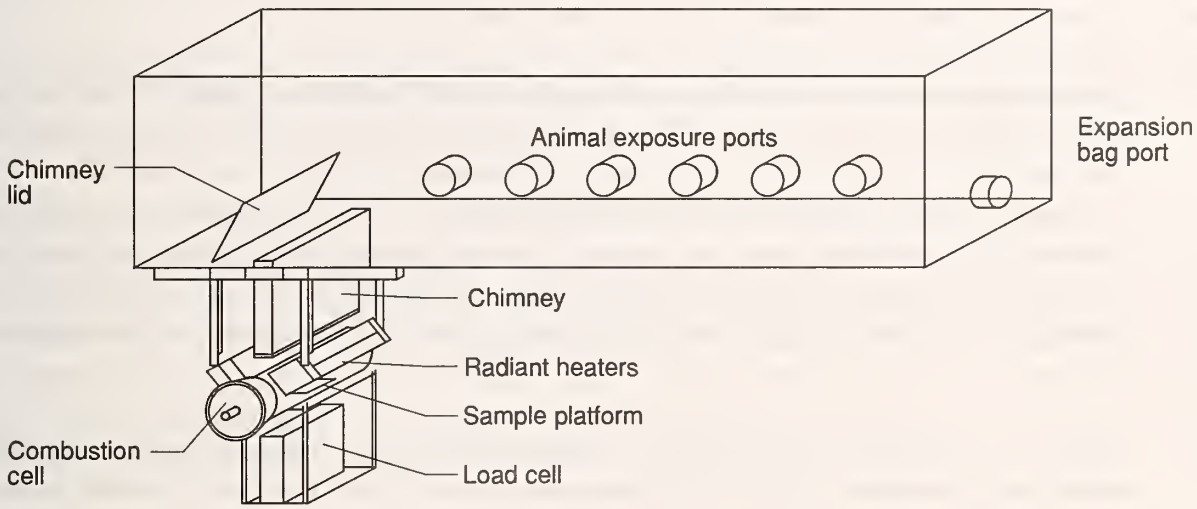

Figure 18. General View of the Radiant Toxicity Apparatus.

radiant apparatus, and is an advanced version of the apparatus developed by SwRI for NIBS. In this radiant apparatus, materials, products, composites, and assemblies are exposed to 50 kW/m^2 radiant heat under likely end-use conditions. The sample surface area may be as large as 76 mm (3 in.) x 127 mm (5 in.), with a maximum thickness of 51 mm (2 in.). Six rats are exposed to the smoke collected in an approximately 200 l rectangular box located above the furnace. Changes in the concentration of smoke are achieved by variation of the surface area of the sample.

The number of animal tests is minimized by estimating the toxic potency of the smoke based on established toxicological interactions of the smoke components. Thus, a small fraction of the chamber atmosphere is removed for chemical analysis of CO, CO_2, O_2, HCN, HCl, HBr, and NO_x. An N-Gas Model had been previously developed by NIST to enable the use of these data to obtain approximate LC_{50} values, based on the calculation of a Fractional-effective Exposure Dose (FED) of mixtures of these gases. The FED value has been found experimentally to be approximately 1.1 at the LC_{50}.

The determination of the approximate LC_{50} is a 2- or 3-step process:

1. **Determine an estimated LC_{50} (30-minute exposure plus 14-day post-exposure observation period) using the N-Gas Model.** This entails two experiments, neither involving animals. The specimen size for the first is obtained using existing data from similar products. The consumed sample mass and the concentrations of gases in the N-Gas Model are measured, and an FED is calculated. Based on this result, a similar second experiment is performed for a specimen that should produce an FED of about 1.1. The LC_{50} for a test is estimated by dividing the volatilized sample mass by the product of the FED for that test and the apparatus volume.

2. **Check the estimated LC_{50} (30-minute exposure plus 14-day post-exposure observation period) using animals.** Again two experiments are needed: one where the specimen surface area (and mass) is chosen to produce an FED of about 0.8, and another to produce an FED of about 1.4. In each experiment, 6 rats are exposed to the smoke for 30 min, and the mass loss and standard gas concentrations are measured. The measurements are to assure that the sample decomposition indeed provided the desired FED. If the LC_{50} estimate is accurate, the exposure at FED = 0.8 should result in either no animal deaths or one and the exposure at FED = 1.4 should result in five or six animal deaths. If the animal deaths are as predicted, then the chemical data from the four experiments are used to calculate an approximate LC_{50}, and no further measurement is needed. The calculation includes a correction for the generation of less-than-post-flashover amounts of CO in bench-scale test devices. Post-flashover fires produce CO yields higher than any bench-scale device (or pre-flashover fires).

3. **If such results are not seen, then determine a more precise value for the LC_{50}.** For a proper statistical determination, three experiments are needed in which some, but not all, of

the rats die. The selection of sample sizes is guided by the prior four tests. After determining the LC_{50}, it should be reported to one significant figure.

The LC_{50} of CO in the presence of CO_2 is about 5 g/m^3, and one-fifth of the smoke in post-flashover fires is CO. Therefore, the LC_{50} of post-flashover smoke (based only on CO_2 and CO) is about 25 g/m^3. The previous work on validation of this bench-scale apparatus showed that the results could be used to predict real-scale toxic potency to about a factor of three. Therefore, post-flashover smokes with LC_{50} values greater than 8 g/m^3 [(25 g/m^3)/3] are indistinguishable from each other.

A measured LC_{50} value greater than 8 g/m^3 should be recorded only as "greater than 8 g/m^3." A hazard analysis would then use this value for the toxic potency of the smoke. A measured LC_{50} value less than 8 g/m^3 would be recorded to one significant figure. These products could be grouped, reflecting the factor-of-three accuracy of the bench-scale test. A hazard analysis would then use values of 8 g/m^3, 3 g/m^3, 1 g/m^3, 0.3 g/m^3, etc.

Most common building and furnishing materials have LC_{50} values substantially higher than 8 g/m^3 prior to the CO correction. Thus, the toxicity of the smoke will most often be determined by the fire ventilation, rather than the specific products burning.

Considerable research and progress has been made in combustion toxicology. A decade of research on combustion toxicity has resulted in sufficient understanding to classify products into *ordinary* and those that require special treatment, for example, those of *extreme toxicity*. From a toxic potency standpoint, this is precisely the information needed to judge a material's acceptability. Most products, including those about which there was significant prior debate, have been shown to lie in the ordinary class. For ordinary materials, heat release rate and the ventilation of the space in which it is burning are more important than its toxic potency.

5.3 Communication Systems

Both the U.S. (NFPA 130) and German approaches include requirements for communication between train crews and a central control point. In addition, the German standards include specific requirements for communications between the train crew and passengers which is at the discretion of the authority having jurisdiction in the United States. The French standards do not cover this topic.

5.4 Fire Detection and Suppression Systems

All three countries include requirements or recommendations for detection systems, typically utilizing heat detectors, which may trigger some automatic response in addition to notification of train crews.

In the German requirements, such detectors must be independent of any power sources external to the vehicle.

The United States, France, and Germany all include requirements for portable fire extinguishers in passenger vehicles.

5.5 Emergency Egress and Access

Requirements in the United States, Germany, and France include general provisions for emergency exits. The FRA requires at least four emergency window exits, in addition to doorway exits, in each vehicle. For German maglev applications, system designs must allow safe hover to be maintained at least long enough to move the train to a safe stopping point which are located at intervals consistent with the vehicle's hovering range. Since this will take some time, they also implement the concept of "horizontal evacuation" as is used in high rise building fire safety. That is, passengers or crew at risk are moved to adjacent cars where the compartmentation requirements create a safe area in which to wait until they can be evacuated.

Equipment-specific guides have been developed to assist local emergency response personnel in fire fighting efforts and to assist evacuation or rescue of passengers and crew. The French have prepared an informational brochure for emergency response personnel, similar to an Amtrak guide, to assist in emergency evacuation procedures for the TGV. These guides contain information on passenger loads and location, exit locations, and operation in an emergency.

5.6 Real-scale and Assembly Testing

Requirements for real-scale testing of passenger guided ground transportation vehicles are somewhat vague in the United States and elsewhere. NFPA 130 encourages the "use of tests that evaluate materials in subassemblies and full-scale configurations where such tests are more representative of the fire source heat flux levels and surface area to volume ratios." As noted above, a real-scale test has the advantage of providing an assessment in an actual end-use configuration. However, such testing in full size is not without disadvantages. Real-scale tests of complete assemblies are often several orders of magnitude more expensive than bench-scale tests. In addition, the advantage of providing an overall assessment of the fire behavior of a material also can represent a disadvantage. By quantifying the outcome of the fire without a knowledge of the factors leading to the resulting fire and without relating the observed fire behavior to basic material properties, little insight into the intrinsic performance of the materials may result [156].

Due to the effort and expense involved, few real-scale studies of the burning behavior of passenger cars have been performed. In the 1960's, Hawthorne [157] reported on tests in a real-scale mockup of a passenger coach compartment. The construction of the mockup consisted of glass-fiber

reinforced polyester wall lining (two layers with urethane foam sandwiched between), and wooden-framed, horsehair-cushioned seating. He concluded that while the spread of flame was not a rapid as anticipated, the assembly presented a greater fire hazard than an all-steel vehicle. For several ignition sources, ranging from paper beneath a seat to diesel fuel on the walls, the double-skinned structure of the wall lining was effective in "restricting the spread of fire through the compartments" in his tests. Little burning of the urethane foam sandwich was noted. However, entire rail transit vehicles have been destroyed by fire originating near such a foam sandwich [158], [159]. In the January 1977 Trans-Bay Tube fire on the BART subway system in San Francisco, most of the foam within an aluminum/urethane/aluminum sandwiched floor assembly was consumed. The BART fire originated via an electrical short beneath the vehicle and thus was a much higher energy ignition source than that used in Hawthorne's tests.

In 1968, the IIT Research Institute, under contract with the National Highway Safety Bureau (NHSB) of the Federal Highway Administration, investigated the flammability characteristics of various passenger car and school bus interior materials; evaluated existing laboratory test methods; assembled fire prevention codes and fire statistics; and recommended a test procedure and a flammability performance standard for automotive vehicle interiors. Over 200 interior materials, representing both domestic and foreign makes of automobiles, were tested to determine their relative flame spread rates [160]. The highest burning rates were found for certain upholstery cover and headliner materials when tested as single layers. Based on the recommendations contained in that study, the NHSB published Federal Motor Vehicle Safety Standard FMVSS No. 302 entitled Flammability of Interior Materials - Passenger Cars, Multi-Purpose Passenger Vehicles, Trucks, and Buses [161]. In FMVSS No. 302, test specimens are mounted, with their exposed surfaces facing down, in a horizontal orientation in a rectangular burn chamber. A small diffusion burner flame is applied from below to one end of the exposed surface of the test specimen. The time of flame spread between two marked points on the specimen holder is used to calculate the flame spread rate. Based on IIT Research Institute work, NHSB specified a maximum flame spread rate of four inches per minute for all motor vehicle interior components exposed to the passenger compartment. This regulation has been applied by the National Highway Traffic Safety Administration to the interior components of school buses.

Braun [162] conducted a study of the fire safety of a transit bus supplied by the Washington (DC) Metropolitan Area Transit Authority (WMATA) in 1974. He determined the minimum ignition source necessary to initiate a fire in the bus and the means by which a fire, once started, was most likely to grow and spread. Tests showed that accidental ignition by a cigarette or dropped match was unlikely; however, the seat could be ignited with one or two matches, if applied at the proper location (for example, by an arsonist). If ignited, fire growth and spread in the bus was primarily through involvement of the seat cushions. Fire then spread from seat to seat with little direct involvement of other interior materials. A companion study of the WMATA Metrorail cars concluded that the seat padding and covering (and the plastic wall lining) were also potential sources of fire hazard [163], [164].

A study carried out in the 1970's by Nelson et al. [165] on rail transit car assembly and transit bus interior assembly mock-ups demonstrated that polyurethane foam seats which met the requirements of the then proposed UMTA (former name of the FTA) guidelines caused room flashover in six to seven min. Using a different ignition source and compartment design, Peacock and Braun [18] showed that, in Amtrak conventional rail vehicle mock-up fire experiments, a polyurethane foam seat assembly which met the UMTA or the proposed FRA guidelines performed well. However, a conventional polyurethane foam seat assembly resulted in flashover conditions in eight minutes.

More recently, Göransson and Lundqvist studied seat flammability in buses and trains using material tests and real-scale tests [166]. All of the seats used high resilient foam covered with a variety of fabrics. Wall panels consisted of fabric-covered wood or metal panels. In the bench-scale tests, the Cone Calorimeter was seen as the method of choice for providing ignition and heat release rate information. In real-scale tests, the maximum heat release rate of a seat assembly, about 200 kW, was not sufficient to ignite the panels or the ceiling "quickly" (unfortunately, without a definition of "quickly"). However, ignition of adjacent seats was noted in real-scale mock-up tests.

In 1990, six different seat assemblies having a range of fire performance were examined in tests on school bus interiors [167]. Small-scale tests (Cone Calorimeter, Lateral Ignition and Flame Spread Test, and NBS Toxicity Protocol) were performed on the materials. Large-scale tests (Furniture Calorimeter) were conducted on single seat assemblies. Full-scale tests were performed using a simulated bus structure measuring 2.4 m wide by 2.1 m high by 8.2 m long and three seat assemblies. The impact of ignition source size on fire development in a full-size bus was determined by computer simulation. It was found that a 500 kW ignition source could produce untenable thermal conditions in the simulated bus enclosure. Seat assemblies were exposed to 50 kw and 100 kw ignition sources in the large-scale tests and 100 kW ignition source in the full-scale tests. Small-scale tests were deemed unable to provide a simple method for material selection that was consistent with all the full-scale test results. Based on the full-scale test results, a real-scale test protocol for seat assembly evaluation was proposed that combines enclosure fire testing with a hazard analysis protocol to determine the time-to-untenable conditions in actual vehicle geometries.

As demonstrated in the material testing discussion, research in real-scale fires in transportation vehicles is leading towards heat release rate based testing of vehicle components (in bench- or mockup-scale) along with hazard modeling to extend testing results to full vehicle size.

5.7 Fire Hazard Assessment

In the 1970's, Prof. E. E. Smith and co-workers at Ohio State University proposed a computational model for predicting fire growth in rail transit vehicles [168], [169]. Heat release rate data were used to describe limits on the combustibility parameters of products that should be used in rail transit vehicles. To determine limits, a maximum loading of combustibles in terms of fuel, smoke-

producing, or gas-generating items was calculated using test data and model predictions of the course of a fire. The model was based on a simplified ignition concept, not one consistent with current-day understanding of ignition and flame spread (for example, see [170]). The needed heat release rate data were obtained from the Ohio State University apparatus (ASTM E-906). Results of a comparison with real-scale fires were presented. Most notable was a conclusion that real-scale fire tests are neither reliable nor useful for evaluating individual materials used in rail transit systems. Real-scale tests are seen mainly useful to check results predicted using relevant bench-scale test data.

NFPA 130 contains a "hazard load analysis" to evaluate overall material flammability in a transit vehicle as an option to the prescriptive requirements discussed previously. Based on the work by Smith, a method is suggested in an appendix to NFPA 130 (an appendix is not a mandatory part of the standard and is included for information purposes only). A heat release rate test is utilized to determine a 180 s average heat release and smoke emission (the OSU heat release rate apparatus is specified as an example calculation in the appendix of NFPA 130). These values are multiplied by the exposed surface area for each material and totaled. Finally, the total values are divided by the volume of the vehicle to obtain "fire and smoke load" for the vehicle per unit volume. A suggested limit of 3000 KJ/m^3 (80 BTU/ft^3) is included as "the maximum allowable loading to assure that a self-propagating fire will not occur with an initiating fire consisting of the equivalent of one pound of newsprint or 8 oz. of lighter fluid." It is not clear how the authors of the original work arrived at this limit. Even the original authors of the work acknowledge that such a "hazard load" calculation does not provide a complete description of a fire [171]. The geometry of the vehicle and placement of combustibles in the vehicle can play a significant role in actual exposures of a given material.

This "hazard load analysis" method is an attempt to provide a simplified and semi-quantitative analysis to assess the overall contribution to fire hazard of the materials used in interior linings and fittings. The method recognizes the heat release rate as the key variable in fire hazard and ties the acceptance to real-scale testing results. However, adding values for all exposed materials in a vehicle to obtain a hazard load assumes that every part of every material ignites and burns simultaneously. In reality, different propensities for ignition, flame spread, and heat release make this a highly conservative approach. Current fire hazard modeling techniques and correlations can provide a more realistic assessment of the contribution of materials to the overall fire hazard.

In Amtrak specification No. 352, "Specification for Flammability, Smoke Emissions and Toxicity," the material test requirements are evaluated in the context of their intended use:

> "The data from each individual test method will not be used independently in evaluating the fire safety of a material since additional factors must be considered for a given situation. These additional factors include, but shall not be limited to: the quantity of material present, its configuration, the proximity to other combustibles, the volume of the compartment(s) to which the combustion products may spread, the ventilation conditions, the ignition and combustion properties of the material(s) present, the presence of ignition sources, the presence of fire protection systems and

vehicle occupancy. Therefore, data from all tests will be combined with other information to develop a fire hazard assessment which will be used to select materials on the basis of function, safety and cost."

In practice, this allows Amtrak designers flexibility to consider the end-use of a material and other fire protection measures in the selection of a material for a particular application. Unlike the "hazard load analysis" included as an alternative to the NFPA material performance criteria, this specification is not a substitute for the material specifications.

6. Systems Approach to Fire Safety

Based on the review and comparison of test methods, criteria, and hazard analysis techniques presented in the preceding chapters, a systems approach to rail system fire safety which draws from both experience and the latest technologies is presented in this chapter.

6.1 Motive Power Unit, Passenger Car, and Trainway Design

Primary concern in motive power unit design focuses around electrical and fuel tank protection. 49 CFR, Parts 229.93-229.97 includes requirements for internal combustion engines and associated fuel tanks. A fuel cut-off device on the fuel tank that can operate automatically as well as manually is required. The fuel tanks are also required to be properly vented and to be grounded against electrical discharge.

The German and U.S. goals of providing comparmentation to separate potential hazards, and in particular, the German requirements to limit the location of most major wiring, equipment, and controls within the walls of passenger spaces to those necessary for lighting, emergency control, or communication is key in the fire-safe design of passenger trains. This places the bulk of the train equipment below the vehicle where stringent separation requirements can be implemented. NFPA 130 provides a general design requirement:

> "Vehicle design shall arrange equipment apparatus external to the passenger compartment, where practical, to isolate potential ignition sources from combustible material and to control fire and smoke propagation. Where it is necessary to install equipment in passenger cars, suitable shields or enclosures shall be provided to isolate the equipment from the passenger compartment."

Such compartmentation design goals could also be extended to major undercar equipment which may be potential ignition sources.

Compartmentation is also key in trainway design. Stations must meet the same criteria applied to any assembly occupancy with equipment spaces such as transformer vaults appropriately separated and ventilated. The critical importance of emergency egress requires that trainways allow for protected egress paths, especially in underground or elevated sections. Standardized approaches to locating emergency equipment such as "blue light" stations assists in the familiarization of travelers with such provisions.

Electrical protection plays a major role in the overall fire safety of transportation vehicles, especially where electricity is the prime motive power. Electrical safety requirements, which address both the

potential for the electrical power to start fires and to injure persons directly, account for a large portion of many specifications.

Traditional techniques of electrical safety are centered on requirements which deal with the mechanical and thermal stability of insulation systems, physical separation of parts of greatly different voltage, properly derated ampacities for wiring to prevent overheating, and barriers to protect components from others that operate at significantly elevated temperatures. Often, requirements are applied on the basis of the maximum circuit voltage as a direct measure of the potential for harm. In Germany, DIN 5510 Part 5 specifies a threshold voltage of 500 volts as the dividing line between low and high voltage circuits with the latter requiring more stringent protection. The U.S. National Electrical Code limit is 600 volts. For U.S. passenger trains, the 600 volt limit should be used for compatibility. Since no nominal circuit voltages fall between 500 and 600 volts this will not present a problem for designers.

Overload protection is also a crucial component in the electrical safety of power sources. Since in most high power applications fuses are used rather than mechanical circuit breakers, these systems are highly reliable as long as they are properly maintained. Batteries can represent a hazard because they can supply high, short term energy and because the charging process often results in combustible gases. Ventilation requirements and overload protection are important to safely vent combustible gases.

6.2 Material Controls

For both flammability and smoke emission, current research and test method development is based around techniques for measurement of a material's heat release rate. This variable has been shown to be key in predicting both real-scale fire behavior and the resulting hazard to those exposed to a fire environment. This direction, by itself, is not enough to justify changing current requirements for passenger trains to a heat release rate based system. In addition, the methods must also be adequate to judge the real-scale burning behavior of materials.

The Schirmer report [19] highlights the major limitations of the current FRA material requirements for passenger vehicles:

- recommended tests do not duplicate actual fire conditions,
- tests do not address geometric configurations of the materials,
- does not address the interaction of materials,
- rate of heat release of materials is not addressed, and
- materials are not tested in their end-use condition.

This section provides a review of the adequacy of the current requirements and of current applications of heat release rate testing which would be applicable to material selection in passenger trains.

6.2.1 Evaluation of Current Requirements

Most of the available published literature pertains to the test methods used in the United States. This section thus concentrates on the U.S. test methods. Where possible, information on similar European methods is included in the discussion.

6.2.1.1 Ignition and Flame Spread (ASTM E 162, NF P 92501)

Some published test results are available for the ASTM E 162 test in transportation applications. Williamson [172] tested six different candidate lining materials for rapid transit vehicles. Test results ranged from a low of $I_s = 2$ to a high of $I_s = 59$. The comparability of the bench-scale tests with large-scale tests was seen to depend on the size of the ignition source in large-scale tests. However, the data was considered by Williamson to be too sparse to comment on an overall correlation potential for E-162. Other work by McGuire [173] for fires on corridor wall, floor, and ceiling materials initiated by a room fire strongly suggest that combustible walls are more critical than, perhaps ceilings, and definitely floors, in terms of fire growth potential. For these elements alone, $I_s = 35$ for walls led to extensive spread, while an $I_s > 130$ for a ceiling and an $I_s > 435$ for a floor appears necessary for extensive spread. Peacock and Braun [18] show similar results for materials in rail vehicle interiors, where wall carpeting and carpeting lining beneath luggage racks appeared critical to large fire development, even with most of the materials in the mock-up of the vehicle interior meeting the FRA guidelines. Unfortunately, for the one test which does not fit the expected pattern of fire growth based on bench-scale test results, complete bench-scale test measurements, including ASTM E-162, were not available for the wall carpeting. Nelson et. al. [174], [175] report on over 350 large-scale fire tests conducted to study the performance of materials in real world environments and the relationship of bench-scale test criteria to improvements in fire safety. The Nelson report details a number of factors associated with ASTM E-162 which effect test results:

- thermocouple and baffle placement within the thermocouple stack,
- thermocouple grounding,
- position of the thermocouple stack with respect to the hood canopy exhaust duct,
- drafts with the room housing the apparatus,
- air supply to the radiant panel, gas supply,
- position, condition, and length of the pilot flame,
- time to warm-up,
- location of the calibrating radiation pyrometer,
- radiometer calibration,
- calibration frequency, and
- standard specimens.

The Nelson report concludes that ASTM E 162 is reasonably predictive of large-scale test behavior and maintains that vehicles which comply with the FTA (formerly UMTA) guidelines have less potential fire involvement, potentially longer times for evacuation, and less eventual fire damage than earlier constructions. However, large-scale testing must play an important role in determining the performance of a system of diverse materials in a vehicle interior. This system approach is in contrast to the test selection criteria used in the development of the flammability guidelines for rail transit vehicle interiors [176]. In the current FTA guidelines, test methods are specifically directed at the evaluation of the performance of individual component materials. While this allows the component supplier to determine the adequacy of their products without having to be concerned with other suppliers and products, synergistic effects of material combinations cannot be evaluated.

Other comparisons of ASTM E 162 with real-scale fires and other bench-scale tests show similarly mixed results. On the positive side, Bieniarz [177] and Fang [57] show a "reasonably predictive" capability of the test. However, in a study of bench-scale tests used to evaluate aircraft cabin interior materials, Nicholas [178] concludes that there were practically no test methods that correlated ignitability, flame spread, or heat release for fabrics and panels. Two test methods, ASTM E 162 and the OSU rate of heat release apparatus [179] showed good correlations for heat release as an indicator of fire hazard. Other researchers have proposed that heat release rate, rather than flame spread, are more important predictors of fire hazard. Like Nicholas, Quintiere [180] concludes that rate of heat release measured in a laboratory-scale test apparatus seems to be the most significant parameter in correlating full-scale data on room temperature or time to flashover. For rail transit vehicle applications, Bonneres and Allender [181] repeat this theme, promoting heat release rate testing. In fact, heat release rate has been advanced to be the single most important predictor of fire hazard [182].

6.2.1.2 Smoke Emission

The U.S., French, and German requirements all include some variant of the Smoke Density Chamber, ASTM E 662 (or its predecessor, the XP2 apparatus), to judge a materials smoke production. Hirschler provides an excellent critique of bench-scale smoke measurement. He divides test methods used to measure smoke obscuration accompanying a fire into five broad categories:

- static bench-scale smoke obscuration tests on materials,
- dynamic bench-scale smoke obscuration tests on materials,
- traditional large-scale smoke obscuration tests on products,
- full-scale tests measuring heat release and smoke release, and
- bench-scale tests measuring heat release and smoke release.

The Smoke Density Chamber (ASTM E 662) is an example of the static bench-scale test. Many researchers have concluded that tests like the Smoke Density Chamber *do not* do an adequate job of

representing the smoke emissions to be expected in real-scale fires [135], [183], [184], [185], [186]. The problems cited include [135]:

- Results do not correlate with full-scale tests.
- Vertical orientation leads to melt and drip.
- Time dependency of results cannot be established.
- No means of weighing sample during test.
- Maximum incident radiant flux is 25 kW/m^2.
- Fire self-extinguishes if oxygen level goes below 14%.
- Composites often give misleading results.
- Wall losses are significant.
- Soot gets deposited on optics.
- Light source is polychromatic.
- Rational units of m^2/kg are not available.

Christian and Waterman [187], [188] conclude that no single smoke rating number should be expected to define relative smoke hazards of materials in all situations. No suitable correlation was found between bench-scale smoke density tests and real-scale fires [189]. They suggest a combination of results from tests under widely differing exposure conditions to account for the effects of material location, fire intensity, and other factors for materials in a totally involved fire.

Dynamic bench-scale smoke obscuration tests measure smoke along with another fire property (typically heat release rate). Implicit in this technique is the recognition that smoke is actually a result of the fire and not a property unto itself. Many large-scale tests for smoke obscuration have been devised for any number of specific situations. These include the ASTM E 84 test and a modified version of the ASTM E 648 test utilized for carpets in rail transit applications. These are often intended for a specific purpose other than smoke measurement and have been adapted for smoke measurement to varying degrees of success.

Like the tests for flammability, it has been proposed that smoke can be best measured in a dynamic test which best simulates actual end-use burning behavior [135]. Tests in large- and bench-scale which measure heat and smoke release fill this niche. Requirements for a bench-scale test to measure smoke have been proposed [135]:

- Measure fire properties in such a way that they can be used for purposes other than simple rankings or pass/fail criteria.

- Measure smoke obscuration together with those fire properties of considerable fire hazard interest, principally the rate of heat release.

- Utilize tests which have proven to give results that are representative of the corresponding property in real-scale.

- Allow for calculations to compensate for complete sample consumption, characteristic of bench-scale tests.

The only tests in existence which fulfill these requirements are those based on heat release rate calorimetry. Hirschler [135] concludes that the best way to measure smoke obscuration in a meaningful way for real-scale fires is to use a bench-scale heat release rate test such as the cone calorimeter [190] (or the OSU calorimeter [179]) with compensation for incomplete burning of materials in a bench-scale test. He finds good correlation with real-scale fires for a range of materials.

6.2.1.3 Fire Endurance Tests

The larger-scale of these test methods seems to have led to less questions concerning their ability to predict end-use fire behavior. Although it is recognized that the actual time to failure of an assembly may be different (either a shorter or a longer time) [191], relative rankings for different assemblies should be indicative of relative actual performance. For short exposure times, this uncertainty could be a significant factor in actual fire performance. For fire endurance testing of building materials, test durations of 1 to 4 h are typical – significantly longer than the 15 min minimum specified in the guidelines. The actual acceptance criteria specified in the FRA guidelines depends upon the evacuation time of a vehicle and could be longer than this minimum. The effect on fire endurance of openings in the assembly is also addressed in the FRA requirements with a specification that "penetrations (ducts, etc.) should be designed against acting as conduits for fire and smoke." Details of such a design are left to the system designer.

6.2.1.4 Bunsen burner Ignition Tests

Considerable evidence questions the usefulness of these tests. Tustin [192] studied the correlations between the Bunsen burner test and fires in a full-scale airplane fuselage interior. Burn length in the Bunsen burner tests showed poor correlation to the full-scale test results. In contrast, bench-scale rate of heat release apparatus provided acceptable correlations to the large-scale test with some corrections to the bench-scale test data. Sarkos, Filipczak, and Abramowitz [193] reaffirm this finding with comparisons between bench-scale test results and an intermediate-scale test of interior partition panels. Although these types of tests may provide an indication of the resistance of a material to ignition, they cannot be used to predict the performance of materials that exhibit high burning rates when subjected to external heating conditions. Neither the Bunsen burner test or the ASTM E 162 radiant panel test correctly predicted the rank order of interior panels in the intermediate-scale tests. Sarkos et. al. recommend a rate of heat release apparatus (the OSU apparatus [179]), with exposure conditions appropriate for the fire scenarios of interest, as an improved test method. This method now supplements the vertical Bunsen burner test in airplane requirements.

The French test, NF P 92504, the German test DS 899/35, and the UIC 564/2 test are similar Bunsen burner tests. Like the other Bunsen burner tests, there is little correlation between these tests and real situations, nor is there an accepted level of the index which could be considered hazardous. In particular, early BART system vehicles have gone to flashover, despite passing the similar ASTM D-1692 Bunsen burner test [194], [195]. Later designs have improved the fire performace of the vehicles considerably. Material selection consistent with the FTA guidelines and full-scale mockup testing indicated minimal fire proagation of the improved designs [196].

The French test, NF P 92501 is primarily an ignition test. However, it is different from the typical Bunsen burner test in that it includes a radiant flux impinging on the sample. This radiant flux can be expected to increase the severity of the test.

6.2.2 Material Performance Based on Heat Release Rate Testing

In the majority of fire cases, the most crucial question that can be asked by the person responsible for fire protection is: "How big is the fire?" Put in quantitative terms, this translates to: "What is the heat release rate (HRR) of this fire?" Recently NIST examined the pivotal nature of heat release rate measurements in detail [182]. Not only is heat release rate seen as the key indicator of real-scale fire performance of a material or construction, HRR is, in fact, the single most important variable in characterizing the "flammability" of products and their consequent fire hazard. Examples of typical fire histories illustrate that even though fire deaths are primarily caused by toxic gases, HRR is the best predictor of fire hazard. Conversely, the relative toxicity of combustion gases plays a smaller role. The delays in ignition time, as measured by various Bunsen burner type tests, also have only a minor effect on the development of fire hazard.

Fire hazard to occupants exposed to a fire can be separated into two categories. For occupants close to the fire, the primary concerns are clothing on fire or direct contact with a flaming object. The injury potential for this category of occupant is mainly governed by the local heat transfer from the clothing or burning object to the skin. For occupants who are either in the room of fire origin, but not close to the fire, or who are in another room of the building, the question of how to describe this hazard has been a puzzling one for fire protection engineers. The traditional tests for flammability focus on

- ignitability,
- speed of flame travel, and
- maximum distance of flame travel or maximum length burned.

These measures were implemented largely because the technology was available for doing it. It was **not** done because a hazard analysis indicated that these variables are what correlated to incapacitation or death of humans.

The speed of flame travel (or extent of flame propagation) is **not** what injures people if they do not come in direct contact with a fire; clothing flammability is not the issue. Instead, injury comes from high temperatures, high heat fluxes, and large amounts of toxic gases being emitted. All of these injury-producing variables scale very closely with the heat release rate of the fire, but not solely with the speed of flame travel or the extent of flame propagation. Life threat to occupants (those not intimate with fire) is directly correlated to the HRR of the real-scale fire [182].

There are at least two approaches to utilizing HRR data in material selection for any application:

- Use the heat release rate with appropriate limiting criteria for the selection of materials and constructions for the application. This is similar to the traditional approach of using the results of test methods to guide the selection of individual materials for an application. The key limitation to this approach is the inability to judge a material in the context in which it is used and in conjunction with other materials in a given application.

- Use the heat release rate in a hazard analysis of the actual application. This removes the limitations of the traditional approach above. However, it requires consideration of how materials are combined in an application and thus is more difficult for individual material suppliers to judge the adequacy of their product to the application.

Both these approaches are appropriate for passenger trains. Sections 6.2.4 to 6.2.7 consider appropriate limiting criteria for material selection using heat release rate data. Chapter 7 addresses hazard analysis applications.

A real-scale fire may be the most valid test, but it rarely is a practical test; testing on a bench-scale is preferable. Bench-scale testing is cheaper and easier than real-scale, but there are also a number of potential technical advantages, if the test is designed correctly. These include:

- increased ease of obtaining repeatable and reproducible results and

- the ability to measure more basic fire properties of the test specimen (something which is generally not captured in the large-scale test).

Babrauskas and Wickström [197] discuss a number of other aspects pertinent to the design of proper bench-scale reaction-to-fire tests. They conclude that bench-scale testing based on HRR is preferable, if the test can be shown to adequately predict real-scale burning behavior. Methods to estimate the HRR of the real-scale fire from bench-scale test results are necessary to be able to predict fire hazard. In some situations, the real-scale HRR of the fire ($\dot{q}_{fs}$), is directly and simply correlated

to the bench-scale HRR. The bench-scale HRR ($\dot{q}''_{bbs}$), is measured on a small specimen of fixed face area. Thus, the correlation then goes schematically as

$$\dot{q}_{fs} = \dot{q}''_{bs} \cdot A$$

where, for the moment, the time-dependent aspect of the problem is ignored. The quantity A is the area of the full-scale specimen which is burning. For a simple, direct correlation to succeed, it is clear that either

$$A = constant$$

or

$$A \propto \dot{q}''_{bs}$$

must hold true. In some cases, it does [197]. In others, however, a more detailed expression must be sought. In such cases, the behavior of the burning area $A(t)$ must be accounted for as a function of time, based on appropriate test results in a bench-scale test. The general procedures for doing this have been worked out by Wickström and Göransson [198], [199]. Wickström and Göransson examined the case of combustible wall/ceiling linings in a room. A product covers certain surfaces; flame spreads over the product; the total heat released by all portions of this burning product is tallied up. The calculational procedure involves a convolution integral of the bench-scale HRR and an expression for $A(t)$. The latter is found to be a function of the ignition time, as measured in the Cone Calorimeter.

It is especially important to note that the fire hazard is **not** proportional to the flame spread rate or to the amount burned. These latter data have been published by Jianmin [200] for the same product where real-scale fire performance results are quoted by Wickström and Göransson. It can be seen that the Wickström/Göransson calculational procedure is necessary and is successful, while a simple direct examination of flame travel results does not at all assess the fire hazard.

6.2.3 Bench-Scale Heat Release Measurement

Measurement of heat release in bench-scale is not new. For instance, The OSU Calorimeter, which was originally developed around 1970, has been discussed earlier. Its results, however, when compared against other measurement methods, have been found to substantially underestimate the heat release rate [201]. A number of other instruments were also designed during the 1970's, but were limited because of either poor validity or practical operational difficulties. With oxygen consumption calorimetry coming into use, however, it became obvious that an entirely new instrument should be built which is specifically designed to make use of this principle.

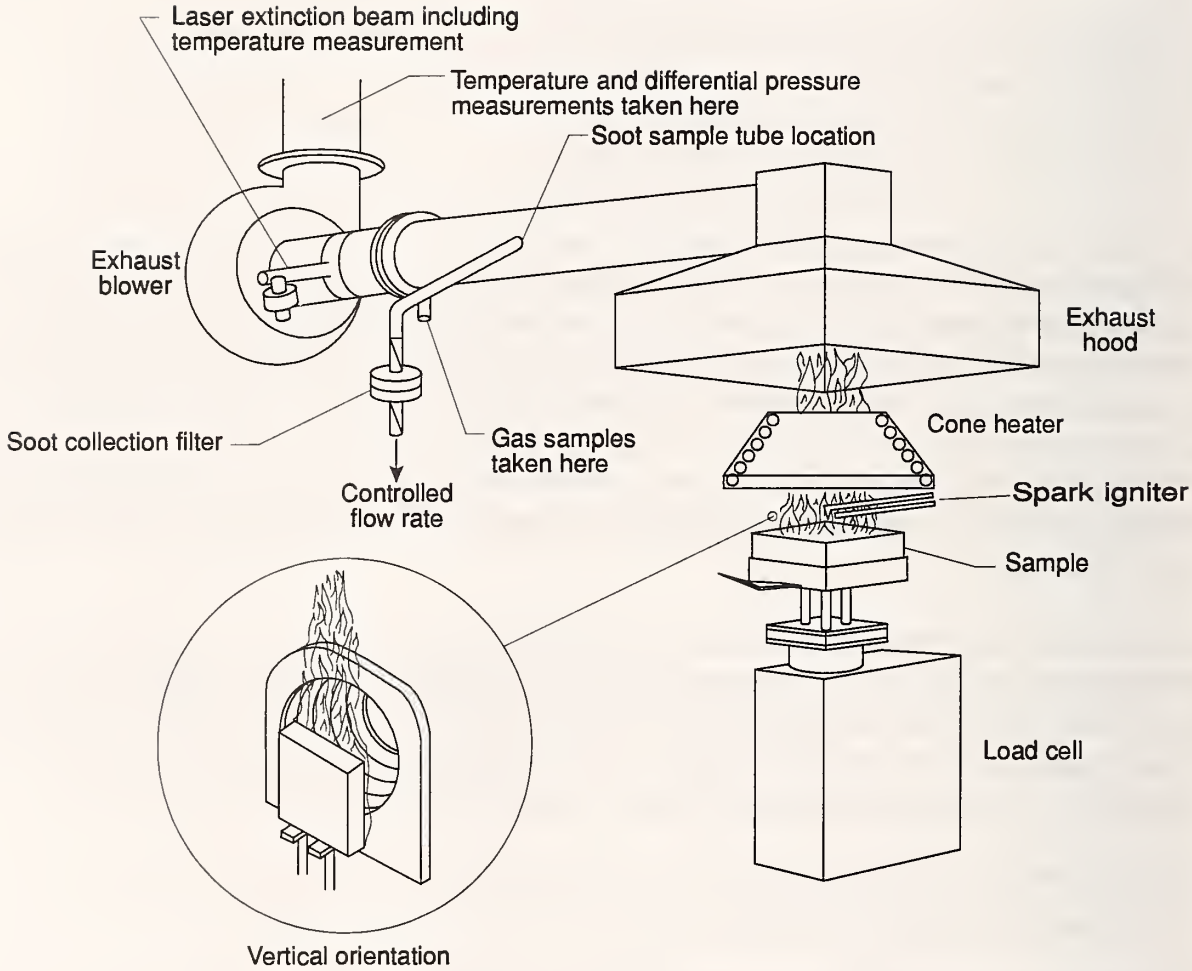

Figure 19. General View of the Cone Calorimeter (ASTM E-1354, ISO 5660).

The development work led to a practical instrument, known as the Cone Calorimeter. The apparatus (Figure 19) makes use of an electric heater in the form of a truncated cone, hence its name. The apparatus is a general-purpose one, which may be used to test products for various applications. Thus, the heater had to be capable of being set to a wide variety of heating fluxes; the actual capability spans 0 to 100 kW/m^2. The design of the heater was influenced by an earlier ISO test on radiant ignition, ISO 5657 [202]. The requirements for the Cone Calorimeter went beyond the design parameters of the ISO 5657 cone, thus the actual heating cone in the Cone Calorimeter is a new design. The Cone Calorimeter represented such a significant step forward in fire testing instrumentation that it was awarded the prestigious R&D·100 award in 1988 [203]. The technical features are documented in several references [204], [205], [206], [207]. Some of the most salient features include:

- horizontal or vertical specimen orientation
- composite and laminated specimens can be tested
- continuous mass loss load cell readings
- feedback-loop controlled heater operation
- heat flux calibration by heat flux meter with in-built alignment fixture
- heat release rate calibration using methane metered with mass flow controller
- smoke measured with laser-beam photometer and also gravimetrically
- provision for analyzing CO, CO_2, H_2O, HCl, and other combustion gases

The Cone Calorimeter is known as ISO 5660 [208] or as ASTM E 1354 [209]. The equipment is made by multiple different manufacturers and is now used by over 100 laboratories worldwide.

Data from bench-scale heat release rate measurements are reported in kW/m^2. The extra m^2, compared to the full-scale results, comes from the fact that in the full scale, one is interested in the total heat being produced by the burning object. In bench scale, by contrast, the area of the specimen has no intrinsic significance, and results have to be reported on a per-unit-area basis. To go from bench-scale data to full-scale predictions, then, requires that an "m^2 factor" be supplied. This factor — in the simplest case of uniformly burning materials — is the area of flame involvement, at any given time of the fire. Today's methods for estimating the full-scale heat release rates do not, typically, treat this area-of-flame-involvement factor explicitly, but rather include it in the predictive correlations.

Validation of bench-scale heat release rate data against large-scale fires has been successfully undertaken in several instances; details are discussed below.

Many older devices for assessing flammability were not based on realistic fire conditions, nor were measurements taken which have quantitative engineering significance. As a result, they could only be used to pass or fail a specimen according to some regulatory requirement. Because its design and

its data are firmly based on an engineering understanding of fire, the Cone Calorimeter has wider applicability. It can be used to:

- Provide data needed for state-of-the art fire models;
- Provide data used to predict real-scale fire behavior by means of simple formulas or correlations;
- Rank order products according to their performance; or, simply to
- Pass or fail a product according to a criterion level.

The earliest applications of Cone Calorimeter data have been in the polymers industry. Manufacturers typically have relied either on limiting oxygen index (LOI) [210] tests or on UL94 [211]. The latter is a simple Bunsen burner type test which gives only pass/fail results; it is clear that quantitative information useful for polymer development does not come from such a test. The former, however, does give quantitative results and uses what would appear to be a suitable engineering variable. However, a recent study has again clearly demonstrated that the results, while quantitative, are not capable of even correctly rank-ordering according to actual fire behavior [212].

For purposes of rank ordering and simplified quantification, it was originally proposed in 1984 [213] that a variable should be considered which is $\dot{q}''_{max}/t_{ig}$. The ratio expressed here is the peak HRR divided by the time to ignition. Data obtained in the course of various room fire test programs had shown that this variable could account for—approximately—the heat release occurring from surfaces over which flame is spreading. This is possible since the flame spread process and the ignition process are governed by the same thermophysical properties of the material. More recently, Petrella has proposed [214] to the plastics industry that a two-dimensional rating scale be considered, with the variable described above placed on one axis and the total heat released during test placed on the other axis. Besides knowing how to analyze the data for such applications, the other important information needed is at what heat flux should the specimen be tested. This question is not simple; a paper very recently presented [215] examines the necessary considerations.

Beyond rank ordering and simple product comparison, there have been already a number of noted successes where Cone Calorimeter HRR data were used for more detailed predictions:

- Combustible wall and ceiling linings in rooms. This is a very difficult problem, but very impressive success was achieved in the European "EUREFIC" research program [216]. It is especially noteworthy that data from *only* the Cone Calorimeter were required in making these real-scale predictions. Another approach to this same problem was developed at Lund University [217].

- Upholstered furniture. This problem was addressed at NIST in two separate research projects [218], [219]. Work is continuing in this area both at NIST and in a large European Community project in Europe.

- Electric wire and cable. In most countries the large scale fire test for these products is a vertical cable tray test. In a research project conducted at BF Goodrich, it was demonstrated that the Cone Calorimeter can successfully predict the HRR results from several such large tests [220].

- Noncombustibility and degrees of combustibility of building products. Work has been done for the Canadian building code committee establishing the use of Cone Calorimeter data in those areas where the code had specified either noncombustibility tests or material-specific requirements [221], [222].

These and other more specialized applications are discussed in detail in a recent textbook which comprehensively examines heat release in fires [223].

Several of these uses are directly applicable to passenger guided ground transportation.

6.2.4 Correlation Methods for Prediction

A detailed discussion of fire scenarios for passenger trains is presented in section 7.3.1. In this section, it is sufficient to note the most important fire scenarios in passenger train vehicles:

(1) fires originating outside the passenger compartment,

(2) fires originating on or under a passenger seat due to arson, and

(3) fires spreading from either of the above fires to adjacent seats or to the interior lining of the vehicle.

For category (1), large-scale fire endurance tests such as ASTM E 119 provide a measure of protection by reducing the risk of a fire penetrating the interior of a vehicle. To address the latter two categories, available correlations based on heat release rate measurements are available. Two areas of the vehicle are primarily involved in fires in categories (2) and (3) – upholstered seating and interior linings. Correlations for these applications are described below.

6.2.4.1 Upholstered Seating

Babrauskas and Krasny [218] and Ames and Rogers [224] studied the burning behavior of upholstered furniture. The latter study included testing of seating to the BS 5852 Part II seating mock-up test included as a requirement for British conventional rail vehicles. These studies included non- or slightly fire-retarded seating assemblies. More highly fire-retarded seating materials are already in use in passenger train vehicles. Such seating materials are the subject of an extensive investigation being carried out jointly by NIST and the California Bureau of Home Furnishings (BHF) [225]. Furniture sold for use in institutional occupancies in the state of California must pass the California Technical Bulletin 133 test (T.B. 133) [226]. Other states have also begun to adopt this test. The T.B. 133 fire test is conducted in a room 3.7 m by 3.0 m by 2.4 m high, lined with gypsum board. Alternatively, the test can be conducted in the ASTM Standard Room (2.4 m by 3.6 m by 2.4 m high) or under a large calorimeter. The furniture is located on a weighing platform in the rear corner farthest from the doorway. The ignition source is a specially-designed, T-shaped gas burner placed at the back of the seat. Temperatures, CO concentration, smoke opacity, and mass loss are measured during the test. For the purpose of this investigation, instrumentation was added to measure the heat release rate by oxygen consumption.

Ten sets of chairs were tested at NIST and at BHF. These were of plain, rectilinear construction with wood frames. Only the type of fabric, type of foam and the presence or absence of a fiberglass interliner were varied between the chairs. The fabrics included wool, nylon, polyolefin and PVC vinyl. The foams examined were a fire-retardant treated polyurethane that passed the California Bulletin 117 bunsen burner and cigarette tests and a more highly FR melamine-treated polyurethane. The chosen combinations provided a very large range of fire performance. The total heat release rates were measured in the NIST furniture calorimeter, the ASTM room fire test, and the room fire test specified in T.B. 133. The ASTM room refers to the proposed ASTM room fire test, which is conducted in a 2.4 m by 3.6 m by 2.4 m high room, lined with calcium silicate board. The newspaper ignition source specified in T.B. 133 and a propane burner used to simulate it [227] were each used to ignite these chairs. The heat release rate per unit area and the heat of combustion were measured in the Cone calorimeter for each of the 10 combinations of materials.

In general, the total heat release rate curves of upholstered seating have two major peaks, one representing the burning of the fabric and one the burning of the underlying foam or padding. For highly fire-retarded or institutional seating, the foam does not get involved and so there is only one peak. For non-fire-retarded seating, the foam becomes involved so quickly that the two peaks merge into one. For moderately fire-retardant seating, the two peaks are resolved and the separation between them can be quite large. In some cases the foam may smoulder for over an hour before it flames, producing the second peak long after the fabric burning has stopped. The actual heat release rate curves can exhibit additional peaks, due to other phenomena such as collapse.

Although limited to the chair designs and constructions used in the study, the real-scale burning behavior of the chairs could be predicted from bench-scale heat release rate measurements. Two

simple correlations were seen comparing testing in the Cone Calorimeter at an external flux of 35 kW/m^2 to the full-scale test results. For highly fire-retarded chairs (including the first fabric peak of moderately fire-retarded chairs):

$$\dot{q}_{fs} = 0.75\ \dot{q}_{bs}''$$

For chairs that are considerably flammable:

$$\dot{q}_{fs} = 4.7\ \dot{q}_{bs}''$$

For chairs of intermediate flammability, small changes in design or construction can lead to either of the two burning regimes embodied in the correlations. Thus, two *caveats* should be noted for the above correlations. The first correlation is dependent on the details of the ignition source and its location; the relation given applies only to the source used for California T.B. 133 testing. The second correlation is not a general predictive equation; it works only because the test chairs had nearly identical mass, frame, and style factors.

However, the simplicity of these successful correlations leads to a direct application of bench-scale heat release rate testing, particularly for application to seating of extremely limited flammability. For such highly fire-retarded seating, only the first correlation is used. This correlation combined with the State of California limit of 80 kW in full-scale testing for such seating, implies that a $\dot{q}_{bs}''$ value of less than 107 kW/m^2 is required. For practical application of bench-scale Cone Calorimeter results to establishing equivalency to the full-scale result, this could be rounded to 100 kW/m^2. It should be noted that these limits (80 kW in full-scale or 100kW/m^2 in bench-scale) provide a stringent criterion requiring highly fire-retarded seating assemblies.

It should be noted that although the implied level of risk in institutional occupancies to which the California T.B. 133 test criteria apply should be similar to that in passenger train vehicles, the actual acceptance criteria used must also depend on the current state-of-the-art in materials employed in a particular application. Widespread test results are not yet available for materials in current use in passenger trains. Thus, practical acceptance criteria could be the same or different from the limit recommended above.

6.2.4.2 Interior Linings

At least two correlations are available for predicting the full-scale burning behavior of wall and ceiling lining materials. Wickström and Göransson [216], [228], [229] have shown from the results of the Cone Calorimeter that the full-scale room fire heat release rate curve (for the ISO 9705 room/corner test) can be calculated. Another similar model has been developed by Östman and Nussbaum [230]. They have succeeded in correlating time to flash-over in the Room/Corner Test

with time-to-ignition and peak heat release rate measured in the Cone Calorimeter, and the density of the product. Both of these models are described below, along with the Room/Corner Test.

Following the ASTM disengagement from the development of a standard room fire test, activity was accelerated in the Nordic countries. Development was principally pursued in Sweden, at the Statens Provningsanstalt by Sundström [231]. The ISO method uses a room 2.4 by 3.6 m by 2.4 m high, with an 0.8 by 2.0 m doorway opening (Figure 20) [232], [233]. The specimen is mounted on the walls and ceiling and is ignited by a propane gas burner operated at two levels, 100 kW for the first 10 min and 300 kW thereafter. A classification scheme for wall and ceiling linings has been proposed by Sundström and Göransson [234] based on this test scenario. The proposed classification, based on time to flashover, is shown in Table 13.

Table 13. Proposed classification system for wall/ceiling lining materials tested in the Room/Corner test

Class	Time to Flashover (min)	Peak HRR (kW)
A	≥ 20	≤ 600
B	≥ 20	no limit
C	≥ 12	no limit
D	≥ 10	no limit
E	≥ 2	no limit

In order to predict full-scale heat release rate from bench-scale measurements, an expression for the burning area, $A(t)$ is required. The step function nature of the ignition source in the Room/Corner test allows a simple empirical description of this burning area. Initially, the area in the corner behind the burner is ignited. The size of this area is assumed constant and the same for all products. The burning area is assumed to grow according to a given function of time. It will, however, start to grow only if an appropriate ignition criteria is reached. This is assumed to be a fictitious surface temperature which depends on ignitability as well as on heat release properties of the product. These parameters are obtained from the Cone Calorimeter. The resulting empirical correlation can then be expressed as

$$\dot{q}_{fs} = \frac{2A_0\, a}{t_{ign}} \sum_{i=1}^{N} \left(t^{\,i}\, \dot{q}_{bs}^{\,//\,N-i}\, \Delta t \right)$$

where t_{ign} is the ignition time, A_0 is the area behind the burner and a is an empirical constant found to be 0.025 s^{-1}. The fictitious surface temperature criterion determines whether the fire will spread away from the vicinity of the burner. It is calculated from an empirical correlation and a calculated surface temperature assuming the material behaves as a semi-infinite solid. Details of the calculation are given in reference [235]. Comparisons for 13 different wall and ceiling linings show reason-

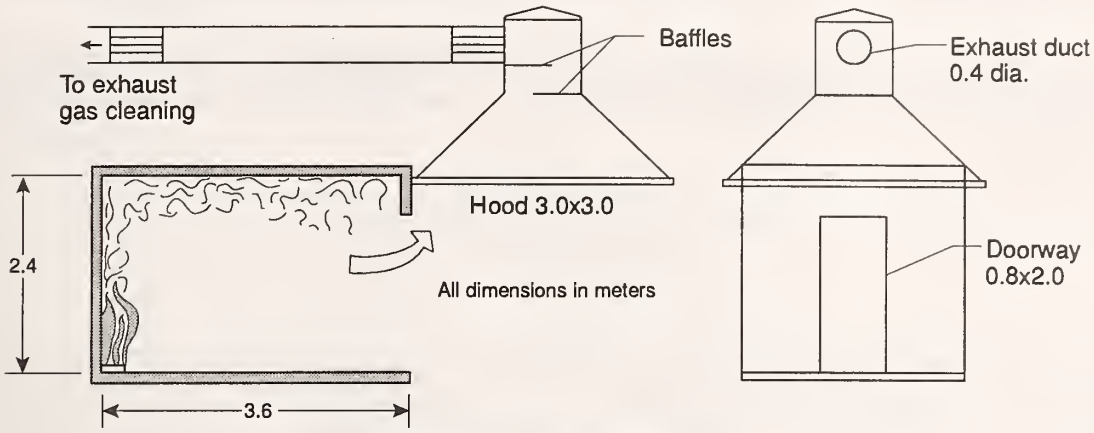

Test Room Configuration

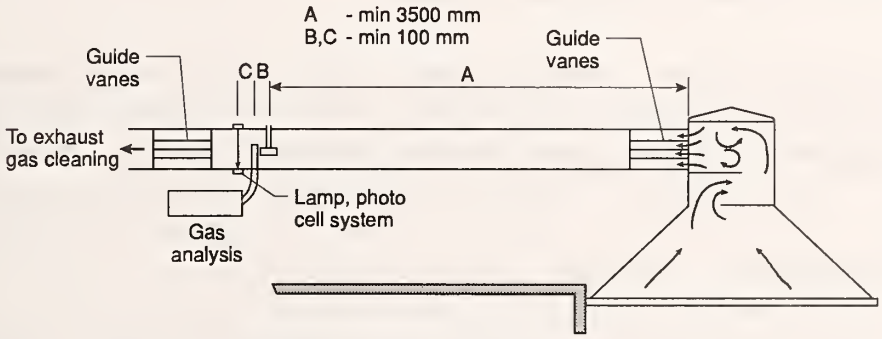

Exhaust Hood Calorimeter

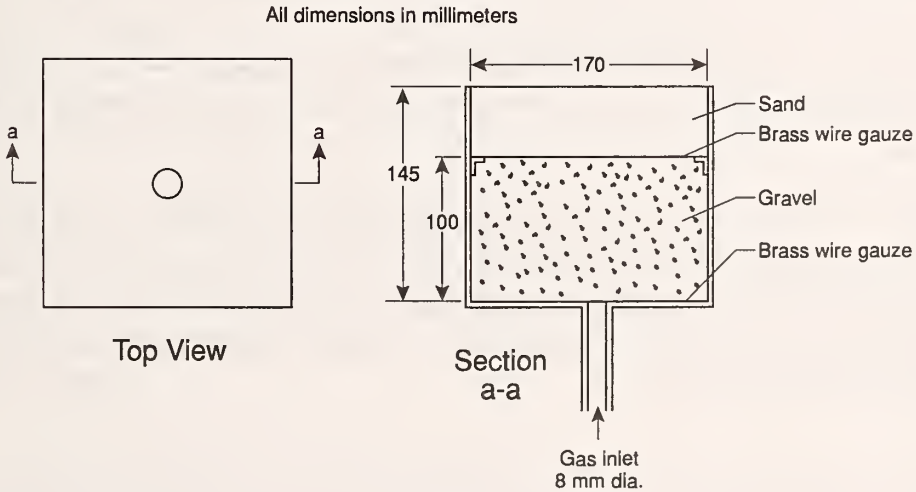

Burner

Figure 20. The ISO 9705 (NORDTEST NT 025) Room Fire Test.

able agreement for all products, even though the products cover a wide range of fire behavior. No products are predicted to be in a wrong classification according to the system outlined in Table 13.

A simpler correlation has been proposed by Östman and Nussbaum [230]. They predict time-to-flashover in the Room/Corner Test from ignition time and heat release measured in the Cone Calorimeter as:

$$t = \frac{2.76\times10^6\, t_{ign}\sqrt{\rho}}{Q} - 46$$

where t is the predicted time-to-flashover in full-scale (s), t_{ign} is the time-to-ignition in the Cone Calorimeter at an irradiance level of 25 kW/m^2 (s), ρ is the density of the material (kg/m^3), and Q is the heat release during the peak burning period (J/m^2). This function gave a quite good correlation between bench-scale and full-scale behavior (with a correlation coefficient of 0.963) and similar rankings for materials studied in bench- and full-scale.

Unfortunately, for surface linings, a simple acceptance criteria applicable to passenger trains is not immediately available as was proposed for seating. Again, test results of materials used in an application are required to establish appropriate acceptance criteria.

6.2.4.3 Smoke Emission

The smoke emission of products is often viewed as a unique material property separate from other fire performance characteristics. In a study of 35 materials covering a wide range of fire behavior, Hirschler [135] proposed five categories for material classification based on heat release rate, ignitability, propensity to flashover (expressed as the same ratio of time to ignition over heat release rate used by Östman and Nussbaum, above), and smoke emission (expressed as a "smoke factor" – the product of the total smoke released and the peak heat release rate). The proposed classifications are shown in Table 14.

Of key importance in this classification scheme is that the better performing materials in terms of HRR and smoke emission are mostly identical materials. In fact, five materials are in the top category in each of the four classifications. This suggests that smoke obscuration in full-scale fires is heavily dependent on fire performance and that those materials that have the best fire performance will also tend to generate less smoke.

Table 14. Classification of Fire Performance Based on Heat Release Rate, Ignitability, Propensity to Flashover, and Smoke Emission.

Peak Heat Release, $\dot{q}''$ (kW/m^2)	Ignitability, t_{ign} (s)	Propensity to Flashover, $t_{ign}/\dot{q}''$ (s m^2/kW)	Smoke Factor, S (MW/m^2)
$\dot{q}'' < 60$	$2.5 < \mathrm{Log}(t_{ign})$	$1 < \mathrm{Log}(t_{ign}/\dot{q}'')$	$1.5 > \mathrm{Log}(S)$
$60 < \dot{q}'' < 100$	$1.5 < \mathrm{Log}(t_{ign}) < 2.5$	$0 < \mathrm{Log}(t_{ign}/\dot{q}'') < 1$	$2 > \mathrm{Log}(S) > 1.5$
$100 < \dot{q}'' < 200$	$1 < \mathrm{Log}(t_{ign}) < 1.5$	$-1 < \mathrm{Log}(t_{ign}/\dot{q}'') < 0$	$2.5 > \mathrm{Log}(S) > 2$
$200 < \dot{q}'' < 300$	$0.5 < \mathrm{Log}(t_{ign}) < 1$	$-2 < \mathrm{Log}(t_{ign}/\dot{q}'') < -1$	$3 > \mathrm{Log}(S) > 2.5$
$\dot{q}'' > 300$	$\mathrm{Log}(t_{ign}) < 0.5$	$\mathrm{Log}(t_{ign}/\dot{q}'') < -2$	$\mathrm{Log}(S) > 3$

Source: Reference [135]

6.2.5 Composite Materials

Composite materials are being considered for use in numerous applications, including passenger trains. Composite materials offer advantages over metal for some applications in weight savings, corrosion resistance, and nonmagnetic character. But the resin in all composites is organic and may increase the risk of fire. For several years, researchers at NIST have been studying the flammability problems of composites [236] in order to help the U.S. Navy develop design criteria. It is anticipated that the use of fiber-reinforced resins on board naval ships will dramatically increase in the coming years; this growth of usage must necessarily be accompanied by a careful strategy for fire-safe performance. This section reviews this research and its applicability to passenger trains.

A composite is a combined material created by synthetic assembly of two or more components: a selected filler or a reinforcing agent and a compatible binder (for example, a resin) in order to obtain specific characteristics and properties [237]. Methodologies of composite fabrication and the resulting properties are described in detail in a number of comprehensive works, such as those of Lubin [237], Grayson [238], and the ASM International Handbook [239]. Moreover, the chemical and physical properties of the resins, reinforcement fibers and fillers are delineated both as individual components and in the finished material. The composite materials considered in this section, for the most part, consist of fiber-reinforced resins and are frequently called reinforced plastics (RP or FRP).

The primary reinforcements used in the production of composites are glass, carbon/graphite, polyamide, cellulosic and other natural fibers. The most widely used reinforcement is glass fiber. When very high stiffness and strength are required, graphite and para-aramide (a type of polyamide)

are often used. The configuration of the fiber reinforcement in the resin may be continuous or chopped strands, woven fabric, swirl mats, or various combinations of the same.

The resin matrix used in composites consists of thermosetting or thermoplastic polymers. Typical resins include polyester, polyimide, polycarbonate, polyethylene, polypropylene, polystyrene, fluorocarbon polymers, acrylonitrile-butadiene-styrene terpolymer, alkyd, epoxy, melamine, and silicones [238]. Although polyester resins combined with glass fibers are the most widely used composite, epoxy resin composite dominates the aircraft/aerospace structural applications. Other resins, such as polyimides, are more expensive and less widely used than the polyesters and epoxy resins, but are preferred when optimal thermal stability at high temperature is required.

A literature survey [240] indicated that older test types were not appropriate for determining actual performance of composites; thus the research has been directed towards HRR and other modern methods. Some studies have focused on the LIFT apparatus [241], [242], but most of the work has centered on using the Cone Calorimeter [243], [244].

6.2.5.1 Types of Composites

The materials whose HRR properties have been studied so far are listed in Table 15[6]. These were chosen primarily because of potential applicability to shipboard use, although certain other materials were included for a comparative basis. For the most part, only the generic classification of the resin and a general classification of the fiber reinforcement were known. Where greater detail of the materials is available, this is indicated in the results section. The generic classification of the resin and fiber identification were provided by the makers, as indicated. The resin classifications are epoxy, polyester, bismaleimide

Table 15. Composite Materials Included in Heat Release Rate Study

Material	Resin Classification	Fiber Reinforcement
Koppers Dion Panels	Polyester, brominated	Glass woven roving
Corflex Panel (Assembly)	Epoxy, filled with aluminum silicate	Glass
Ryton Panels	Poly(phenylene sulphide)	Glass/graphite
Laboratory Fabricated	Epoxy	Graphite
Laboratory Fabricated	Bismaleimide	Graphite

[6] The use of company names or trade names within this report is made only to identify the individual materials tested. Such use does not constitute any endorsement of those products by the National Institute of Standards and Technology.

(BMI), and poly(phenyl sulfide) (PPS). In general, the resin reinforcement was a glass fiber fabric except for the Ryton PPS panels and panels prepared in the laboratory in which carbon fibers were used.

The specimens were prepared at the standard 100 mm by 100 mm face size, and using the full thickness of the supplied product. The testing was in accordance with ASTM E 1354.

6.2.5.2 Ignition and Time Dependent Heat Release Rate

Ignition: The first performance aspect to be examined was the resistance of materials to piloted ignition under radiative heating. The trends of the data can be seen from log-log plots of time to ignition data as a function of irradiance. Figure 21 shows the results for the Koppers Dion 6692T panel (25 mm thick) and the Corflex panel (3 mm thick). Linear regressions for the data points show slopes of -2.3 and -1.7, respectively, for the Koppers and Corflex panels. For the other materials studied, these slopes ranged from -1.7 to -2.6.

In the simplest case, the negative slope should be 2.0 for thermally thick materials, 1.0 for thermally thin ones, and on the order of 1.5 for intermediate cases [245]. This does not appear to hold for the data on composite panels. While the value of 2.3 for the 25 mm thick Koppers panel is certainly close to the thermally thick theoretical value of 2.0, the other data are more difficult to explain. The 3 mm Corflex panel and the 3.2 mm Ryton panels have nearly the same thickness, yet significantly different slopes. The answer, presumably, lies in the fact that these **are**, in fact, composite materials. Thus, the theoretical model, developed for homogeneous substances, could be expected not to apply. Unfortunately, a more refined analysis cannot be made because the thermal properties of these composites are not well known at elevated temperatures.

Heat Release Rate: In studies using the Cone Calorimeter for these same materials, it was found that, due to the complex nature of the material and its pyrolysis, the HRR curves obtained presented some unique traits. The HRR curves, of course, depend both on the chemical composition of the resin and on the thickness of the composites. Figure 22 shows the HRR of 3 mm thick PPS/glass fiber (Ryton) panels, subjected to irradiances of 35, 50, and 75 kW/m^2. These curves demonstrate typical variations observed in the HRR-time profiles of composites panels.

In general, all of the curves exhibit at least two maxima for HRR. The initial peak is due to surface volatilization, which then reduces due to char formation. The second peak is a result of an increase in the gasification rate of the unburned substrate caused by an increase in the bulk temperature of the substrate. The bulk temperature increases because the unburned substrate is no longer thermally thick. Back surface temperatures should increase as the second peak of HRR is approached. While these measurements were not made in this investigation, the studies on wood (another char-former), show the same phenomenon [246].

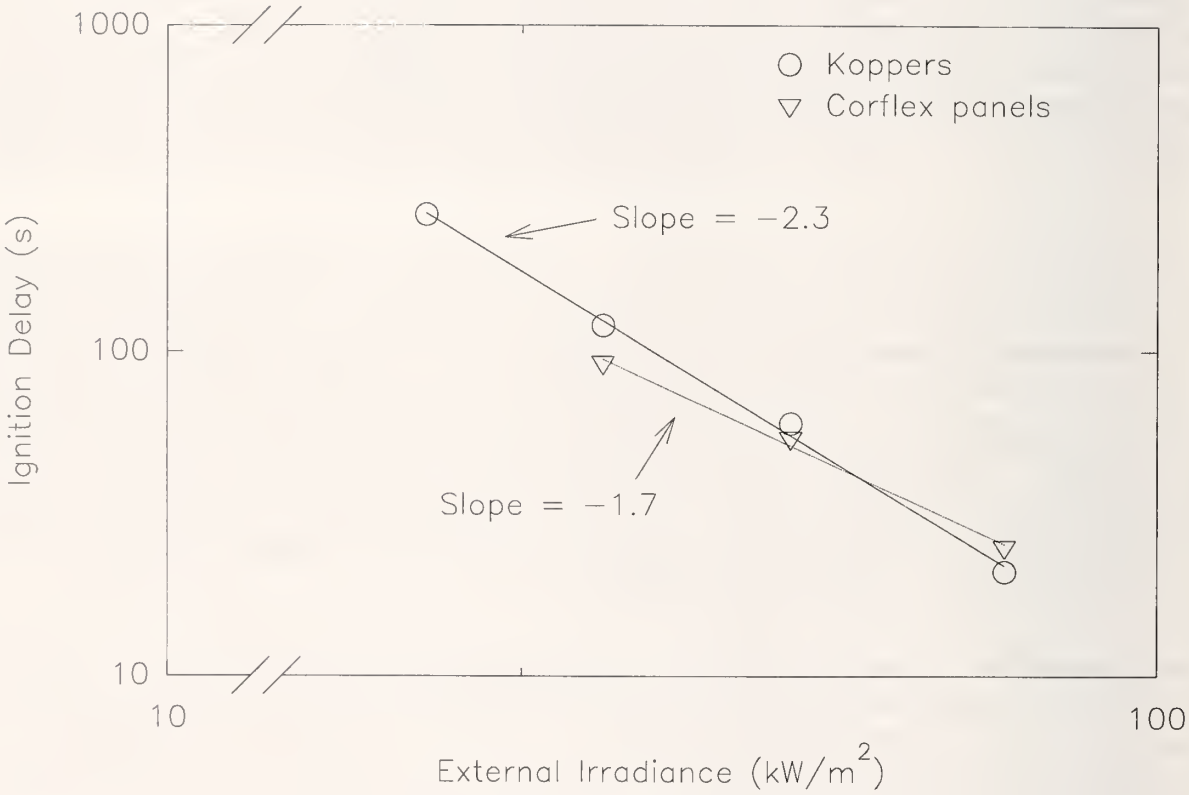

Figure 21. Time to Ignition as a Function of Irradiance for Two Different Composite Panels.

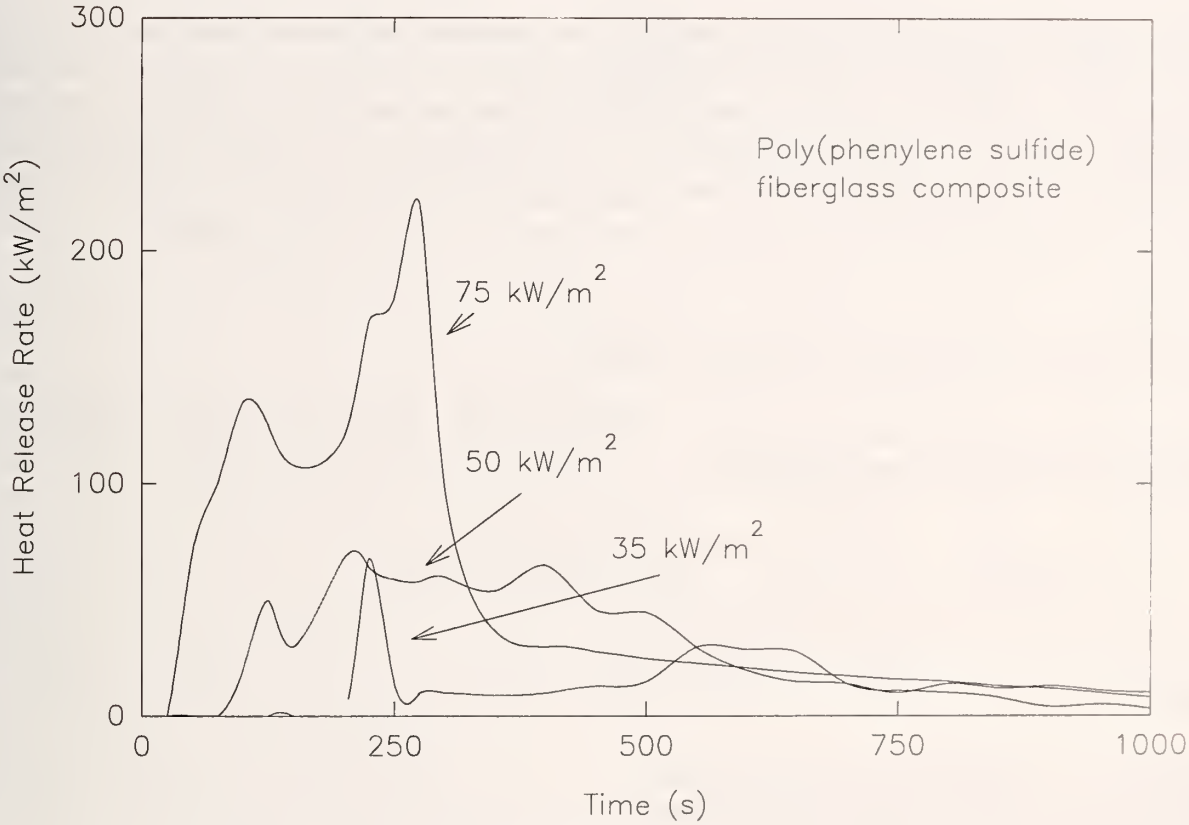

Figure 22. Example of the Effect of Irradiance on the Heat Release Rate for a Composite Material.

In most cases, the HRR changes quite significantly with time, so it appears that more meaningful information may be gained about the fire behavior of the composites under radiative heating if the rates of heat release are averaged over periods of time during the burning process. Not only are the advantages of curve smoothing brought forward to clarify trends in the heat release data, but such averaged data are often better predictors of full-scale performance than is the peak of the curve. Kanury and Martin [247] also have used average values for deducing physicochemical properties of essentially homogeneous materials in fire environments. ASTM E 1354 specifies that average $\dot{q}''$ values for the first 60, 180, and 300 s after ignition be included in the report of the Cone Calorimeter results.

The average $\dot{q}''$ data show that the composites with polyester and epoxy resins generally show maximum $\dot{q}''(t)$ values in the first 60 s post ignition. The $\dot{q}''(t)$ values generally decrease with time after the first 60 s which suggest that the peak HRR is associated with initial surface burning of the composite rather than subsequent combustion of the pyrolysate from the interior of the composite. For irradiances of 50 kW/m^2 or more, the composites with PPS and BMI resins show maxima at times greater than 60 s. For these samples, the maximum $\dot{q}''(t)$ is not the initial peak.

6.2.5.3 Predictive Aspects of Heat Release Rates

Proceeding in a manner similar to Kanury and Martin [247] and Kanury [248], it is possible to express the HRR of composite materials as

$$\dot{q}'' = \frac{\Delta h_{c,eff}}{L} [\dot{q}_T'' + \dot{q}_e'' + \dot{q}_l'']$$

where

$\Delta H_{c,eff}$	= effective heat of combustion
L	= heat of gasification (pyrolysis)
$\dot{q}_T''$	= heat transferred from flame to material surface
$\dot{q}_e''$	= imposed external flux
$\dot{q}_l''$	= heat flux loss by the surface to ambient

The slope ($\Delta H_{c,eff}/L$) of a plot of the measured HRR against the external radiant flux can be taken to provide a measure of the flammability of materials, and is termed the thermal sensitivity index (TSI) [247]. The TSI provides a basis by which the fire performance of the materials may be indexed and compared over a broad range of external irradiances, simulating different fire environments. The intercept of such a plot indicates, in principle at least, whether the flame is self-sustaining in the absence of an external radiant flux for the time period under consideration. This parameter is termed

the extinction sensitivity index (ESI); Kanury and Martin [247] called this parameter the limiting thermal index. The equation then becomes,

$$\dot{q}'' = (TSI)\cdot\dot{q}_e'' + (ESI)$$

Table 16 summarizes the slopes (TSI), intercepts (ESI), and average effective heat of combustion. The TSI values (slopes) are estimates of the sensitivity of the combustion intensity to variations in external irradiance and show that the Koppers composite, Corflex Panel Assembly, and BMI Panel had about the same sensitivity to variations in $\dot{q}_e''$. Because of differences in sample thickness these samples should not be compared to each other without caution. However, the TSI values indicate that the rate of heat release of these samples, although not the same in magnitude, would be fairly insensitive to small changes in external irradiance. This suggests that in a real fire, the decay in an external fire imposing energy on a target material made from one of these composites would not be reflected as rapidly in a reduced heat release rate of the target material as compared to the materials with higher TSI values. For example, the Ryton Panels, which ranged in value from 1.3 to 1.8, would be expected to respond most strongly to variations in source irradiance.

Table 16. Comparison of Inferred Flammability Indices of Composite Materials

Material	$\Delta H_{c,eff}$ (kW/m^2)	TSI	ESI
Koppers Dion 6692T	12±2	0.6	39
Corflex panel	12±0.9	1.1	125
Corflex panel (assembly)	12±0.4	0.6	100
Lab. epoxy panel	20	1.4	100
Lab. BMI panel	29	0.9	75
Ryton panels			
chopped mat	25±1.6	1.3	5
swirl mat	22±2.0	1.6	-55
woven mat	23±2.2	1.8	-40
graphite woven mat	23±0.03	1.6	–
average	23±1.3	1.6±0.20	–

a TSI – thermal sensitivity index
b ESI – extinction sensitivity index

The Ryton Panels also exhibited a negative intercept, ESI. This suggests that the heat loss from the flame is greater than its flux to the surface. With the removal of an external heat source, these materials can be expected to self-extinguish, while the other materials with a positive ESI would be expected to continue burning at least for the first 60 s. The intercepts indicate that the epoxy matrix composite exhibits the most potential for sustained combustion with an external radiant flux following ignition.

In Table 16, the effective heat of combustion values are averages taken from each exposure over the entire measurement; they are computed from the ratio of $\dot{q}''$ to mass loss rate, $\dot{m}''$. These values fall into two groups, the lower one (about 12 kJ/g) where the resin is flame retarded and the upper values (20-29 kJ/g) where it is unretarded.

Real-scale data do not exist for composites of the kind examined here. It is expected, however, that within the next few years, full-scale data will begin to be available. At that point, it will be possible to no longer deal in hypothetical predictors, such as TSI and ESI, but, rather, to develop predictive techniques which are validated against the bench scale results.

6.2.5.4 Implications for Use of Composite Materials

As for conventional materials, HRR testing is gaining prominence in the evaluation of the fire behavior of composite materials. Similar testing techniques (the Cone Calorimeter) and incident heat flux levels have been applied to testing of composite materials compared to conventional materials. In some cases, the shape of the heat release rate curve over time is more complex for composites due to the more complex constructions involved in composite structures. Appropriate acceptance criteria may depend on more than just simple peak heat release rate values – with time averaged values appearing appropriate for most composite materials. However, the same type of testing is appropriate for composite materials as is appropriate for conventional materials. Actual criteria for material acceptance would depend on further testing of candidate materials for passenger trains.

6.2.6 Tests Needed

Three types of tests are seen as necessary to evaluate the fire behavior of materials used in passenger trains:

- The Cone Calorimeter, ASTM E 1354, can provide multiple measure of fire performance for materials and assemblies used in the construction of passenger train vehicles. These include ignitability; heat release rate; and release rates for smoke, toxic gases, and corrosive products.

- Standard fire endurance testing, such as specified in ASTM E 119, provides a measure of the ability of a given construction to prevent the spread of fire from one compartment to another or from the underside of a vehicle to the interior.

- Initial *reference* real-scale testing will always be needed for any product category. Bench-scale tests can then, if suitably validated against these real-scale fires, be used to provide for most of the needed product testing. Thus, the large-scale test will rarely be needed in actual practice. But, it must be available for those situations where the bench-scale test is not applicable. Reference [197] gives further guidance on this point.

6.2.7 What is Lacking in Material Testing?

As noted above, appropriate acceptance criteria for application of HRR-based tests to passenger trains have not been developed. Widespread bench-scale heat release rate test results are not yet available for materials in current use in passenger trains. Actual acceptance criteria must consider not only the desired level of protection, but also the current state-of-the-art in materials design for the application. Some testing is still required to establish equivalent criteria for current materials.

Once these test results are available, some real-scale testing of materials will be required to establish or verify the predictive ability of the bench-scale tests. This will serve two purposes: 1) to provide a level of validation of the bench-scale testing, and 2) to minimize future real-scale testing needs for suppliers and manufacturers of passenger trains.

6.3 Fire Detection Systems

Fire detection systems provide notification to the both crew, who may be assigned the duties of fighting the fire and of assisting the safe evacuation of passengers, and the passengers themselves. In the design of any detection system, there are fundamental questions which need to be addressed:

- Which spaces need to be monitored?
- What type(s) of detector(s) should be used?
- What functions should be performed when an alarm is received?

Within the transportation environment, detection systems have predominately been limited to the monitoring of identified hazards. For rail systems, this usually involves wheels and bearings, brakes, motors and motor controllers (on electrically-powered systems), or other equipment typically located under the car. For motor vehicles, detection systems are generally limited to engine compartments. For aircraft, detection systems are used in engine nacelles, cargo compartments, avionics bays, and lavatories. For each case, the spaces being monitored contain systems which are more prone to fires or contain critical systems whose failure may pose a safety hazard. In addition, systems which contain materials for which the ignitability or fire development characteristics are difficult to control and which might pose a threat may be monitored.

Another characteristic of the spaces monitored is that they are locations which are not subject to observation by either passengers or crew. Serious fires frequently begin in hidden or unoccupied spaces where they have the opportunity to grow before they are discovered. An example is a 1982 incident where a fire began in an unoccupied bedroom of an Amtrak passenger train in California, resulting in the deaths of two passengers. Transportation vehicles generally do not utilize detection systems in occupied spaces because of the presumed likelihood of discovery by passengers or crew.

In open coaches, such discovery is likely. For sleeping accomodations, detectors should be considered for confined spaces which may be unoccupied.

The types of detectors used must be matched to the combustible materials present, and to the environment in which they are installed. This always involves a compromise between speed of response and the potential for false alarms. Heat detectors are slow to respond but are the most rugged for installation in a harsh environment such as the underside of a railroad car or the engine compartment of a bus. Response time can be optimized if the detectors are in close proximity (in direct contact if possible) to the component which might catch fire. This slower reaction time usually means that the fire is larger when detected so the monitored spaces are generally separated from spaces containing people or critical equipment by barriers with some fire resistance. Heat detectors are unsuitable for monitoring materials which are prone to smoulder or to produce smoke and gases without much thermal energy.

Smoke detectors are faster to respond but cannot be applied within harsh environments. They are limited to use in spaces with temperatures between -35 °C and 50 °C (-30 °F and +120 °F), non-condensing conditions with humidities generally not exceeding 95%, not dusty or dirty, nor where exhaust from internal combustion engines may cause an alarm [249]. Thus, smoke detectors are best suited for passenger areas such as sleeping cars of trains, conditioned spaces such as avionics bays or cargo compartments in aircraft. Smoke detectors (particularly the optical type) located in individual compartments or lounge cars where smoking is permitted should not produce false alarms if the spaces are properly ventilated such that the smoke does not reach levels which would be irritating to passengers.

Where rapid reaction is needed in a harsh environment, optical flame detectors could be employed. These respond to the infrared or ultraviolet energy released by flames but are sealed, looking through a window at the device or area being monitored. They have a limited field of view and the window can become dirty, preventing them from operating (some will monitor the window and generate a maintenance signal when it needs cleaning). Optical flame detectors need to be applied with special care since they can respond to certain non-fire conditions. Ultraviolet detectors are especially sensitive to electrical arcs and cannot be utilized around electrical equipment. Infrared sensors will react to hot surfaces and often use a "flicker" sensor to react to the flickering frequencies of flames (5 to 30 Hz). However wind-blown flames on a moving vehicle may not flicker at these rates causing the detector to fail to detect a fire. Thus, these applications should be verified by test before being accepted.

Automatic fire detectors are currently required in a number of specific applications in transportation vehicles. For aircraft, FAA regulations require fire detectors in engine nacelles (14 CFR Part D 25.1203), and certain cargo compartments (14 CFR Part D 37.111). Some avionics bays are protected by smoke detectors (for example, the Airbus) due to the high concentration of electronic equipment which is crucial to the safe operation of the aircraft (especially with "fly by wire" systems without mechanical backups). More recently, under a FAA directive (as a result of an in-flight fire), smoke

detectors have been installed in all aircraft lavatories. The recently developed Amtrak specification for fire alarm systems utilizing smoke detectors [250] provides a critical level of passenger safety.

In conventional rail service, freight cars have a history of failures of brakes or bearings causing overheated wheels leading to derailments. Rather than installing detectors on the cars, the railroads use "hot box" detectors adjacent to the tracks. Containing a differential infrared sensor, the device senses the overheated wheel as a train passes, and transmits a signal to dispatchers who warn the train crews. These detectors are typically used on passenger rail cars as well.

Some busses employ fire sensors and automatic extinguishing systems within engine compartments, but not in passenger or luggage spaces. These systems are provided more for protection of the bus rather than for the passengers.

Rail transit systems appear to have the most sophisticated detection and suppression systems although, there is no general requirement, even in NFPA 130. Electric "third rail" systems utilize a complex of high energy equipment along the underside of the car. Motors, controllers, resistor banks (for speed control) and regenerative braking systems deal with a lot of energy in small spaces and generate a great quantity of heat. This leads to small fires or overheating situations which need to be dealt with. Typically, there are thermal sensors under the car to warn of unusual temperatures. Extensive overcurrent protection devices help to insure that major faults do not develop. In the Washington DC WMATA system and several other regional mass transit systems, water spray systems in each station spray up and cool overheated undercar equipment. When an operator receives a signal from the detection system that something is overheating, the operator simply proceeds to the next station and activates the spray system.

6.4 Alarm and Communication Systems

Once an abnormal condition is detected, someone responsible needs to be notified. This might be crew, passengers, remote dispatchers or maintenance operations; or any combination of these. The general philosophy is to tell only those who need to know, and who are expected to take some action as a result. Passenger notification is typically by the train crew who were first notified by the detection system and have verified that evacuation is needed and safe.

Modern alarm systems are capable of much more sophisticated operations than simple notification of personnel. In theory, an alarm system can control any equipment in any sequence of events under any conditions. In large buildings, the fire alarm system can take over control of all mechanical and utility systems within the building and manage them to both minimize further hazards and facilitate fire fighting operations. Such could also be true in transportation vehicles, although this has never been proposed.

The current Amtrak Specification 307 [250] contains requirements for fire alarm systems for passenger cars. It contains specifications for smoke detectors and their locations, a control panel with its own emergency battery supply, emergency shutdown of the heating, ventilating, and air conditioning (HVAC) system and a pre-alarm to allow 2 min for crew to take action before the evacuation signal is sounded utilizing a voice messaging system.

This specification is basically a good one, but it could be improved. The specification is labeled for new passenger cars, but clearly the priority would be to get it into any cars in which passengers sleep. In coach cars (uncompartmented), sensors every 20 or so feet should be sufficient. In sleeper cars, one-per-compartment would be needed. The requirement for photoelectric sensors is sound given that smoldering fires involving bedding or seating might be expected. However, addressable devices should be called out as a minimum, with analog sensors being desirable. These would allow the maximum flexibility in operation and features like automatic sensitivity compensation and remote testing.

The specification requires the system to shut down the HVAC system in the car. Depending on how the HVAC is configured, this may not be the optimum operation. For example, in a sleeper car where each compartment has a separate fan unit and the compartments are positive with respect to the corridor, leaving the fans on in all compartments **except** that containing the fire (or if the fire is in the corridor) will help keep the occupied compartments more smoke free. Exhausting the fire compartment to the outside would also help if this were feasible. If addressable devices were utilized, the system would know the exact compartment(s) which were contaminated and such precise control of the HVAC is easy. With analog sensors, the system could be self-compensating for passenger activities, especially for smoking within the compartment (if this is still allowed) which might represent a source of false alarms.

The Amtrak smoke alarm specification calls for voice-messaging capability. This **should not** utilize tape systems (as have been used previously in buildings) as these have proven to be highly unreliable. The industry is moving to digital technology using solid state memory or CD-ROM technology which is reliable and offers the ability to provide messaging in multiple languages.

The two-stage alarm sequence specified is also a good approach, but if analog sensors are utilized this could operate on two levels of signal rather than a two-minute time limit. Thus, if a rapidly growing fire were detected, the second stage would begin passenger action before conditions became untenable. For a non-threatening situation, the crew would have more than a two minute time period in which to act.

DIN 5510, Part 6 specifies that each vehicle have a fire alarm system. However, it states only that the system report to the driver or other continuously staffed location and that the power be independent of power external to the vehicle, requiring the provision of batteries which can power the alarm system if the overhead system is unavailable. Further, the entire alarm system can be

eliminated if the vehicle is equipped with an automatic extinguishing system (but it does not say where, or whether the extinguishing system provides complete or partial coverage).

As a general rule, the more complex the detection and alarm system, the more that can go wrong. Systems with a number of automatic features need higher levels of preventative maintenance by more highly skilled technicians to function reliably.

6.5 Suppression Systems

Most commercial transportation vehicles, ranging from trains and trucks to boats to aircraft, are required to carry portable fire extinguishers. For portable fire extinguishers to be effective, several conditions must be met. First, the persons expected to use the extinguisher must be trained; and this training must include actual use of the extinguisher to put out a fire. This training is typical with flight attendants in commercial aircraft. Second, the type and size of the extinguisher must be appropriate for the types of fires which might be encountered. Further, portable extinguishers will not be effective on all fires – especially those in inaccessible areas. Some aircraft cargo compartments are accessible in flight and are equipped with detectors to warn the crew, who are trained on how to enter the compartment and attack the fire. Other compartments are not accessible and would need to be protected by fixed extinguishing systems.

Inaccessible spaces or any location where fires might present a serious risk before manual action could be taken are candidates for fixed extinguishing systems. These systems may be manually actuated, as are the extinguishers in commercial aircraft engines, or may act automatically as with the extinguishers in waste receptacles in aircraft lavatories. A good criterion for which operating mode to choose is the risk posed by unnecessary activation. In the aircraft engine, operation of the extinguisher will shut down the engine. With the lavatory waste container, activation of the extinguisher is typically not noticed until the lavatory is serviced after landing.

Systems may also be used which are not intended to extinguish a fire but rather to delay the fire development. Such systems are being considered for commercial aircraft. Following the crash of a 737 in Manchester, England, the UK's Civil Aviation Board researched smoke hoods for passengers for several years, eventually abandoning the efforts as impractical. They then began to explore spraying a fine mist of water in the cabin to dampen materials and delay ignition and fire spread; allowing more time for evacuation. By using the potable water already on-board, weight penalties are minimized. Since the greatest need is at takeoff when the water tanks are full, the supply is considered reliable. The FAA is currently conducting research on this topic.

6.6 Emergency Egress and Access

In most applications, provision of life safety from fires involves ensuring sufficient time to relocate persons at risk to a place of safety. In transportation vehicles, this includes the time needed to bring the vehicle to a stop in an area where it can be evacuated. Where vehicles operate in tunnels, this may mean moving out of the tunnel or to a station platform. In the Washington DC WMATA system, a train that is stalled in a tunnel and not in immediate danger will be pushed by another train to the next station before it is evacuated. With a maglev system, if power cannot be provided to the levitating magnets, the train cannot be moved unless a tow train was equipped to provide emergency power.

The Amtrak Emergency Evacuation Procedures Manual [105] documents the location and markings of emergency exits in Amtrak rolling stock and in tunnels and stations, but does not establish who will assist those passengers who need help, how passengers are notified of the need to evacuate, nor does it establish evacuation time goals. Its stated purpose is to document for rescuers how to gain entry into various cars to affect rescues of passengers or crew. In contrast, under FAA requirements, commercial aircraft must demonstrate that they can be evacuated on the ground in under 90 seconds. No similar evacuation time goals are set for any other transportation vehicle types. Thus, in any fire hazard assessment, the time needed to evacuate all passengers in an emergency, from the discovery of the problem to the last person out needs to be established, and the expected mix of persons who will need assistance addressed.

Currently, the FRA requires four emergency window exits for each passenger car. The FRA is developing recommended guidelines which include additional emergency planning and emergency egress for passenger train applications.

7. Scenario Based Modeling of Fire Hazards

After preventing ignition, the primary goal of fire safety engineering is to limit the impact of the fire on a construction and its occupants. This has traditionally been addressed by placing a limit on the burning behavior of products in some standard test method which was intended to simulate a realistic threat. For example, the ASTM E-84 [251] test evaluates the performance of interior finish products when exposed to a standard fire condition representative of a broad range of applications for these products. The results of these test methods can be misleading when applied to products without proper regard to their context of use, such as the testing of low density plastics in the E-84 test. In many cases, there is only a tenuous connection between the results of that test and the property that was being checked. This applies to various aspects of bench-scale tests including toxicity, flame spread, ease of ignition, and smoke emission.

These concerns were explained earlier in this report under the sections dealing with test methods (by country), the supporting research, and other fire safety strategies. In general, it is difficult to substantiate the assertion that some critical property was measured in most bench-scale tests. However, the advent of modeling, developed mostly over the past decade, is having a profound impact on the ability to realistically evaluate the fire hazards of materials and products in their actual context of use. It is no longer necessary to totally depend on the stand-alone test methods for determining the degree of fire safety afforded by a component material. The complex interactions of multiple components with each other in the context of their application and use can be evaluated; interactions which are not considered in traditional test methods. Deficiencies of one component may be offset by the strengths of another, resulting in a safe combination. A good example of this is the use of blocking layers in aircraft seats [252] which protect the foam core for sufficient time to allow safe evacuation of the passengers. This allows retention of the benefits of light weight and comfort while still providing an appropriate level of safety.

It is the newly-emerging science of predictive fire modeling that enables evaluation of the combination of a material and the environment in which it is being used. A primary example of the application of this field is in assessing smoke toxicity from the burning of concealed combustibles [253] where the surroundings of the product affect its burning behavior as well as the movement of the smoke to where people might be harmed. Of even more importance, the models can keep track of the contribution of the smoke produced by a product, relative to the smoke produced by other combustible items which may be involved. This relationship is a breakthrough, since only the total smoke toxicity can be measured in tests.

Concurrently, this predictive capability has advanced the field of real-scale testing. Now, it is possible to obtain both supplementary and confirmatory information when these tests are conducted in a fully-integrated program with computational studies [254]. Using these computational models, the practicing fire protection engineer is able to perform a thorough, previously-unavailable

evaluation of a broad range of materials and components (such as those found in passenger trains) to develop a carefully directed design for experimental studies.

7.1 Mathematical Modeling of Fires

Analytical models for predicting fire behavior have been evolving since the 1960's. The initial focus was to describe in mathematical language the various phenomena which were observed in fire growth and spread. These separate representations have typically described only a small part of a fire. When combined, they create a complex computer code intended to give an estimate of the expected course of a fire based upon given input parameters. These analytical models have progressed to the point of providing predictions of fire behavior with an accuracy suitable for most engineering applications. In a recent international survey [255], 36 actively supported models were identified. Of these, 20 predict the fire generated environment (mainly temperature) and 19 predict smoke movement in some way. Six calculate fire growth rate, nine predict fire endurance, four address detector or sprinkler response, and two calculate evacuation times. The computer models now available vary considerably in scope, complexity, and purpose. Simple "room filling" models such as the Available Safe Egress Time (ASET) model [256] run quickly on almost any computer, and provide good estimates of a few parameters of interest for a fire in a single compartment. A special purpose model can provide a single function. For example, COMPF2 [257] calculates post-flashover room temperatures and LAVENT [258] includes the interaction of ceiling jets with fusible links in a room containing ceiling vents and draft curtains. Very detailed models like the HARVARD 5 code [259] or FIRST [260] predict the burning behavior of multiple items in a room, along with the time-dependent conditions therein.

In addition to the single-room models mentioned above, there are a smaller number of multi-room models which have been developed. These include the BRI transport model [261], the HARVARD 6 code [262] (which is a multi-room version of HARVARD 5), FAST [263], CCFM [264] and the CFAST model discussed below [265].

Over a decade ago, modeling efforts applicable to transit applications were reviewed for the U.S. Department of Transportation [266]. Even in the early state of development 10 years ago, such models were seen as having the potential to be an effective tool in the design of a fire safe transit vehicle by comparing the arrangement of furnishings and the type of materials in the construction of one compartment to the furnishings and materials of another compartment. Although several years old, reports by Mitler [267] and Jones [268] reviewed the underlying physics in several of the fire models in detail. The models fall into two categories: (1) those that start with the principles of conservation of mass, momentum, and energy; and (2) curve fits to particular experiments or series of experiments, used in order to develop the relationship among some parameters. In both cases, errors arise in those instances where a mathematical short cut was taken, a simplifying assumption was made, or something important was not well enough understood to include.

Once a mathematical representation of the underlying science for the growth and spread of fire has been developed, the conservation equations can be re-cast into predictive equations for temperature, smoke and gas concentration, and other parameters of interest, and are coded into a computer for solution. The environment in a fire is constantly changing. Thus the equations are usually in the form of *differential equations*. A complete set of equations can compute the conditions produced by the fire at a given time in a specified volume of air, referred to as a *control volume*. The model assumes that the predicted conditions within this volume are uniform at any time. Thus, the control volume has one temperature, smoke density, gas concentration, etc.

Different models divide a compartment into different numbers of control volumes depending on the desired level of detail. The most common fire model, known as a *zone model*, generally uses two control volumes to describe a room – an upper layer and a lower layer. In the room with the fire, additional control volumes for the fire plume or the ceiling jet may be included to improve the accuracy of the prediction (see Figure 23).

This two-layer approach has evolved from observation of such layering in real-scale fire experiments. Hot gases collect at the ceiling and fill the room from the top. While these experiments show some variation in conditions within the layer, these are small compared to the differences between the layers. Thus, the zone model can produce a fairly realistic simulation under most conditions.

Other types of models include *network models* and *field models*. The former use one element per room and are used to predict conditions in spaces far removed from the fire room, where temperatures are near ambient and layering does not occur. The field model goes to the other extreme, dividing the room into thousands or even hundreds of thousands of grid points. Such models can predict the variation in conditions within the layers, but typically require far longer run times than zone models. Thus, they are used when highly detailed calculations are essential.

7.2 Hazard Modeling

7.2.1 The Need for Quantitative Hazard Analysis

Public fire safety is provided through a system of fire and construction codes and standards which are based on the judgment of experts in the field, and which incorporate test methods to measure the fire properties or performance of materials and products. For passenger trains, these codes and standards prescribe the construction methods and materials considered acceptable. This system works to provide a reasonable level of safety to the public. However, existing codes need continual revision as new materials or design and construction techniques are introduced. Quantitative tools for fire hazard analyses can provide ways of addressing such developments consistent with the intent of the code. The flexibility provided by these quantitative tools can help to ensure the safe and rapid introduction of new technology by providing information on the likely impact on fire safety before

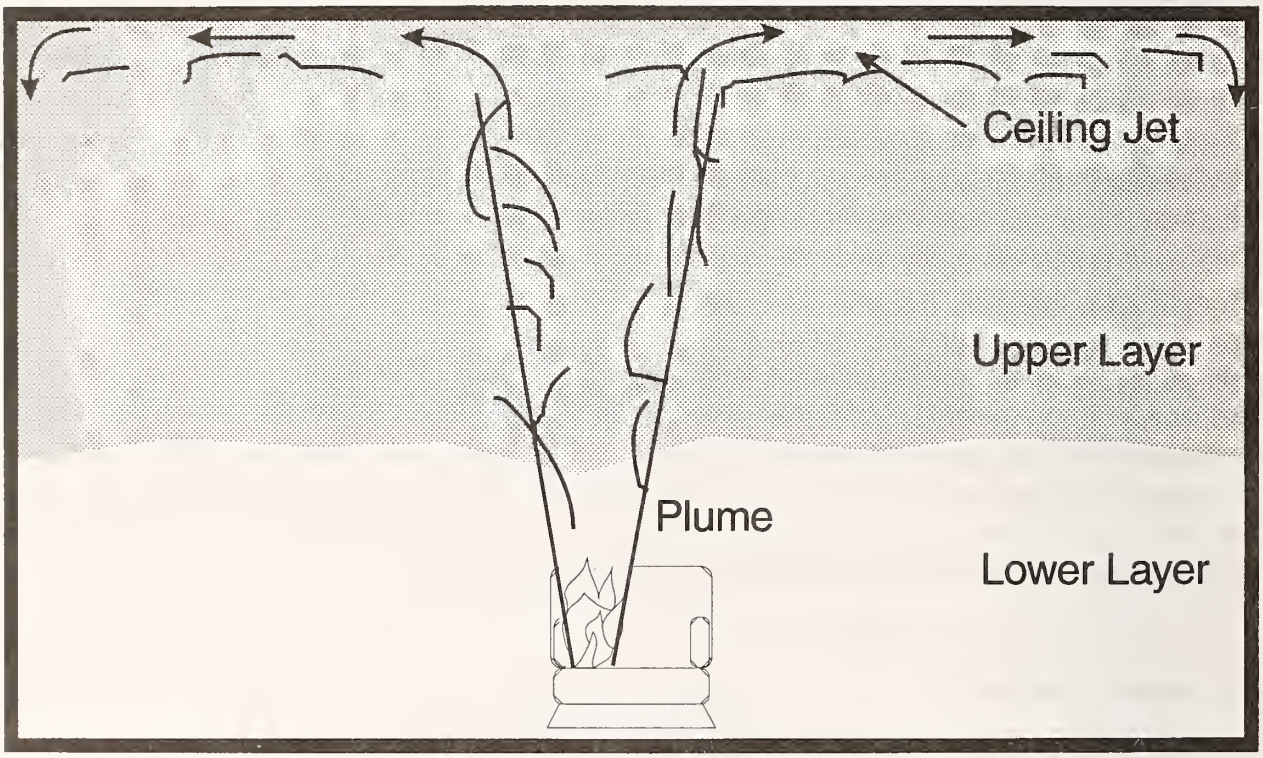

Figure 23. Zone Model Terms.

a performance record is established through use. Similarly, these methods can be of value to product manufacturers in identifying the potential fire safety benefits of proposed design changes.

There are many highly interactive factors which need to be considered in performing a quantitative fire hazard analysis. Experimental measurements of the burning behavior of materials of interest and details of the structure (e.g., a building or train vehicle) in which they burn are needed to define the fire in terms of its release of energy and mass over time. The transport of this energy and mass through the structure is influenced by its geometry, the construction materials used, and the fire protection systems employed. The response of occupants and the consequences of the fire depend on when the occupants are notified, their physical capabilities, the decisions they make, and their susceptibility to the hazards to which they are exposed.

Tools for fire hazard analysis make it possible to evaluate product fire performance against a fire safety goal. For example, a goal of fire safety has always been to "keep the fire contained until the people can get out." The problem is that it is very difficult to keep the "smoke" contained. Quantitative hazard analysis allows the determination of the impact of smoke, i.e., its toxic component, *relative* to the impact of other hazards of fire for a prescribed building and set of occupants. It determines if the time available for egress is greater than the time required; and if not, why not. Time is the critical factor. Having 3 min for safe escape when 10 min are needed results in human disaster. But providing 30 min of protection when 10 are needed can lead to high costs. A hazard analysis method can help prevent both types of problems from occurring.

Quantitative hazard analysis techniques have the potential of providing significant cost savings. Alternative protection strategies can be studied within the hazard analysis framework to give the benefit-cost relation for each. In addition, measures are evaluated as a system with their many interactions, including the impact of both structure and contents. Providing these alternatives promotes the design flexibility which reduces redundancies and cost without sacrificing safety. New technology can be evaluated before it is brought into practice, thus reducing the time lag currently required for code acceptance. Quantitative hazard analysis is a powerful complement to existing codes and standards and a useful tool in evaluating improvements to them.

7.2.2 Overall Approach of Hazard Assessment

Techniques for hazard analysis typically involve a four step process for the evaluation of hazard in a specific scenario:

1. **Define Context of Material Component Use:**

- What is the problem to be resolved?
- What is the scope or context of product use? - occupancy type(s), building design(s), contents, occupants, etc.

- Who are the key decision-makers?
- What criteria will they use to accept/reject the product?

2. **Define Fire Scenario(s) of Concern**: (A scenario is a specific fire in a prescribed structure with well characterized contents and occupants.)

- Examine relevant fire incident experience with same/similar products.
- Identify the likely role/involvement of the product in fire.
- Which fire scenarios do the decision-makers feel are
  most common/likely?
  most challenging?
- Define or obtain relevant bench- and larger-scale test measurements on the materials and products involved in the scenarios of concern.

3. **Calculate Hazards/Outcomes**:

- Using predictive models and/or calculations, determine the progress of the fire in terms of environmental conditions throughout the structure of interest.
- Determine the impact of these conditions on occupants in terms of incapacitation or death.

4. **Evaluate Consequences**:

- Examine outcomes for each of the relevant fire scenarios selected in step 2 relative to the decision criteria.
- Establish confidence in the predicted results using sensitivity analysis, expert judgment and, when needed, complementary small or large scale tests.
- Delimit the range of applicability of the results based on the above.

In the summer of 1989, the National Institute of Standards and Technology released the first version of the HAZARD Model [269] which implements this process. HAZARD is a complete methodology for assessing the hazard due to unwanted fires in compartmented structures. The precedent of using a HAZARD I fire hazard analysis to establish a code requirement for a product has already been established. In 1990, the NFPA Task Force on Contents and Furnishings proposed a change to the Life Safety Code [270] chapter on hotels which would limit heat release rate based on the onset of flashover or other hazardous conditions. Different HRR limits were proposed for sprinklered and non-sprinklered buildings based on HAZARD I predictions for a typical hotel guest room.

7.3 Application of the Methodology to Passenger Trains

There are three primary areas which must be sufficiently defined in the above process to allow a fire hazard analysis to be conducted for passenger trains. These are:

- What are the specific fire scenarios which are important to be studied?
- What criteria should be used for acceptance of a design studied via fire hazard analysis?
- To what extent should the results of a hazard analysis be verified?

Section 7.3.1 discusses the fire scenarios which are important in passenger train vehicles. Section 7.3.2 provides an outline of a procedure for analyzing the scenarios using criteria based on hazard to occupants of the vehicle.

7.3.1 Scenarios

7.3.1.1 Interior Fires

Assuming that the interior construction and furnishing of a proposed passenger train car is similar to those in current service, there are two primary parameters that must be defined to permit a determination of the effect of an interior ignition fire:

- a description of the ignition source (the rate of energy release and the total amount released), and
- the location of the ignition source.

Except for electrical fires, there are three probable locations for an interior ignition source in a passenger train. They are:

- on the floor
- on the floor - beneath a seat or mattress, and
- on a seat or mattress.

For all these locations, the first item ignited by the ignition source will be either the wall, ceiling, or seat cushions. In order for the ceiling to be ignited, the ignition source, located in the aisle, would have to produce flame heights approximately equal to the floor to ceiling distance of the vehicle (about 2 m / 7 ft). A fire of this size would require an inordinately large amount of fuel. It is, therefore, highly unlikely that this scenario has a high probability of occurrence. No further consideration will be given to this specific scenario.

For the remaining two ignition locations, probable flame spread patterns can be postulated. If the ignition source is on the floor below the aisle seat or mattress, there are two possible modes of flame spread. One is along the floor covering and the other is along the cushion or mattress. Flame spread initially along the floor covering (of the type in current use) is not probable based on considerable real-scale testing in transit vehicles, and actual fire incidents [159]. This would be true even if the ignition source were reasonably large (e.g., 0.5 - 1.0 kg of newsprint). Based on the history of ignition of seat cushions (e.g., see references [159] and [18]), ignition of the seat cushion or mattress

is the most likely path for fire growth. At this point, the fire would probably grow in intensity, until the back of the seat, adjacent seats, the ceiling, or the wall liners were ignited. Without actual testing, it is not possible to determine if adjacent seat assemblies would ignite prior to the ignition of the wall and ceiling liners. The composition of both the seat assemblies or sleeping car mattress, and the wall or ceiling lining affect the relative contribution of each component to the total fire growth. In tests of Amtrak vehicle interiors, carpeted wall and luggage racks were key to the fire growth for certain interior combinations [18]. For other tests, the composition of the seating was the primary factor in fire growth.

For floor ignition sources near the wall, primary fire growth would still be due to the seat cushions or mattress. However, the wall liner would ignite at a much earlier stage of fire development and contribute to the total evolution of heat and smoke.

For fires originating on a seat or mattress, critical fire stages could be reached sooner in comparison to floor fires. For seats, there may be nearly simultaneous involvement of back and seat cushions. For mattresses, the wall lining adjacent to the mattress could become involved. At a given stage of fire growth, sufficient feedback energy would exist to permit the lateral spread of the fire to an adjacent seat cushion in the same seat assembly. From this point on, the growth and spread of the fire would resemble a floor ignition.

So far, fire growth patterns assuming an ignition have been postulated, but not the characteristics of the ignition source and the minimum energy necessary to cause ignition. Probable ignition sources range from smoldering cigarettes to flammable liquids. They differ only in the rate of energy release and the total energy released. The total energy in turn depends on the mass of combustible material in the ignition source. Figure 24 shows the relationship of energy release rate for various ignition sources to the total heat released for a given mass of material [159]. Based on experimental work, ignition levels for various seating materials are indicated. These minimum values were arrived at empirically in a series of experiments conducted on subway and bus seat assemblies in use in the late 1970's. Strictly speaking, these results pertain to the physical constraints present and the materials employed at the time of these tests. Nevertheless, it can be inferred that a significant improvement in ignition resistance can be realized by changes in the materials used in constructing seat and mattress assemblies.

7.3.1.2 Exterior Fires

For transit systems, the majority of the fire incidents have originated below the floor. In conventional rail systems, a significant number of fires also originate outside the passenger compartment. Thus, consideration must also be given to the probable results of sub-floor ignitions. In addition, sub-floor fires are the most difficult to handle because detection usually comes late in the development of the fire. Sub-floor fires may be caused by a variety of sub-system failures. Above ground failures that stall a train do not represent the same degree of risk to passengers that similar below ground failures

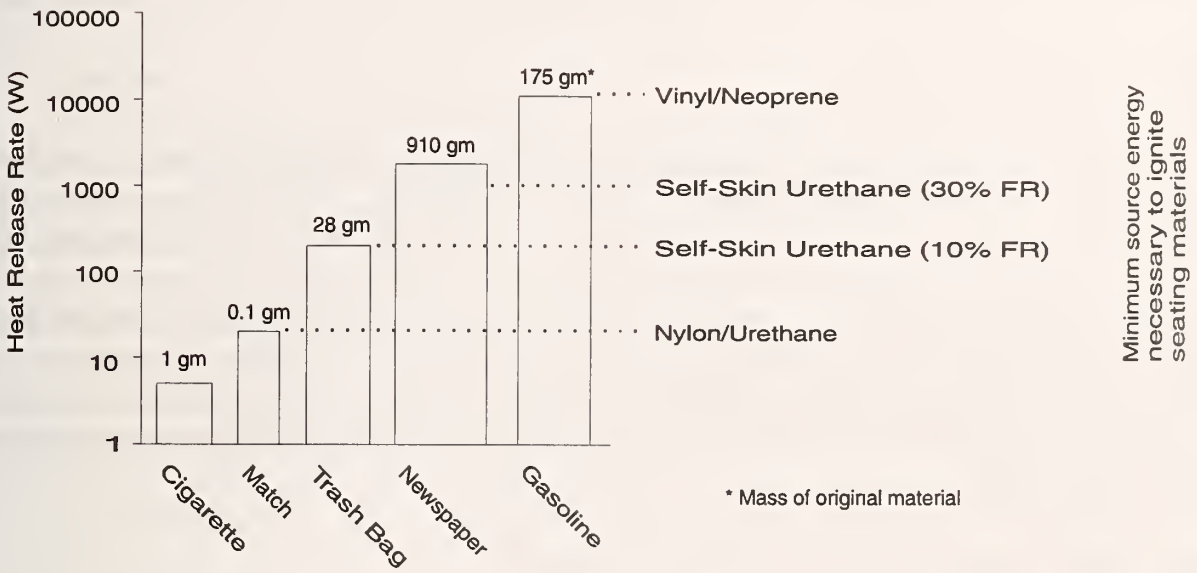

Figure 24. Minimum Ignition Source Energies for Various Seat Assemblies.

do. The greatest hazard of such an incident would occur if the train were located between stations. Simple scenarios can be described for sub-floor failures and their consequences. The critical parameters that enter into the description are:

1) the location of the train at the time of detection,
2) the condition of the train as a result of the failure (i.e., is the train moveable),
3) the intensity of the fire.

While the first two items determine the nature of the reaction that train system or emergency response personnel must initiate, the third determines the effective time available for evacuation and suppression. The fire endurance of the floor assembly becomes critical. If, at the time of detection, a sub-floor fire has spread over all areas of the floor assembly, the floor will fail sooner than if a fire is detected at a much earlier stage of development.

7.3.2 Analysis of the Scenarios

Currently, the fire performance of passenger guided ground transportation systems is evaluated through prescriptive requirements based upon individual material tests. With hazard analysis, it should be possible to ascertain the actual performance of products in the context of actual use. The results of such a hazard analysis should be a clear understanding of the role of products in the fire scenarios defined above. By identifying when and under what specific conditions materials might begin to contribute to the hazard, authorities will have a better foundation on which to base appropriate vehicle and system design. By showing the relative contribution of a particular product or design feature, it is possible to make a more realistic assessment of the necessity for specific design requirements.

The general scheme for a hazard analysis is as follows:

- the fire performance properties of individual products are ascertained through appropriate bench-scale methods,
- the contribution of the product is determined through computational studies for a range of applications in which it is typically used, and
- the validity of the predictions is confirmed through limited well-designed real-scale testing.

The outcome of a hazard analysis for a specific product (or class of products) will be a statement of whether the products under consideration constitute a threat above and beyond the impact of other fuel loading. Further analysis can ascertain whether compartmentation, detection, and/or intervention strategies can ameliorate the hazard.

Cappuccio [271] and Barnett [272] have developed a hazard and risk analysis framework for application to rail transit systems. This framework recognizes components of overall system fire

safety and provides a formulation for a calculational-based hazard and risk assessment for transit vehicles.

7.4 What Is Lacking In Hazard Analysis?

Information by which to characterize the application environment is typically available through general statistical sources. However, there are two elements missing. The first is the necessity of showing the ability to predict real-scale burning behavior for specific applications with results obtained from small scale tests combined with computational hazard analysis. Second, in order to carry out such an analysis completely, there is one computational piece missing, a self-consistent pyrolysis model. Barnett and Cappuccio [271-272] outline the additional research needs necessary to implement a hazard and risk analysis framework for rail transportation vehicles consistent with these two missing elements. They include three areas important for further study:

- collection of small-scale test data for hazard analysis using methods such as the Cone Calorimeter, the furniture calorimeter, and the Radiant toxicity apparatus to collect fundamental flammability properties of the materials used in trains.
- extension of existing compartment fire models for application to transit vehicle fires.
- real-scale tests of actual trains.

The HAZARD model and all models of fire growth rely on what is commonly called a specified fire. In this application, one measures the heat release rate, smoke production, toxicity and so on with the test methods described above. Then these results are used to describe the fire which is used for the scenario calculations. In most cases, this is an acceptable solution. The heat release and species production are constrained by the available oxygen. In general, but not always, such an analysis will yield a conservative result. The reason is that the amount of pyrolysate available for burning is a coupled function of the heat generated, so often the mass flux from the fire will be different than expected from the tests performed in a free burn environment as is the case for the Cone Calorimeter and most other test apparatuses. Thus, the level of hazard can be bracketed. But to be able to extend the predictions to multiple products burning simultaneously or sequentially, such as an initial seating fire which ignites an adjacent wall panel, prediction of fire growth is essential.

Before such calculational tools are available to directly predict fire growth, estimates from correlations such as the Wickström and Göransson techniques for combustible wall panels or available correlations for upholstered seating must be used in place of a predictive pyrolysis model.

To date, hazard analysis techniques have focused on the products involved in fire. Other components of a system approach to fire safety are just beginning to be incorporated into predictive models. Until these are fully developed, the effects of areas such as vehicle design or fire detection and suppression must be estimated from traditional design strategies.

8. Conclusions

Considerable advances in fire safety engineering have been made in the decade since the original development of the current U.S. guidelines for passenger train material selection. Some requirements for system design, materials controls, detection, suppression, and emergency egress are included in the variety of requirements reviewed – with each applying to distinct subsets of passenger guided ground transportation. Better understanding of the underlying phenomena governing fire initiation and growth have led to the development of a new generation of test methods which can better predict the real-scale burning behavior of materials and assemblies. At the same time, advances in fire and hazard modeling are leading a revolution in the analysis of a materials overall contribution to fire hazard in a particular application. Such an approach allows evaluation of factors in addition to material flammability and of tradeoffs in the fire-safe design of the entire fire safety system. These advances should be incorporated in future designs of passenger trains. To properly evaluate the fire safety of a system, motive power unit and passenger car design and construction, material flammability, fire detection and suppression systems, communication systems, emergency evacuation, system operation, and personnel training must be considered.

Several independent sources support this new direction for rail transportation fire safety. Studies by Cappuccio and Barnett [271-272] on transit system analysis, Schirmer Engineering Corporation [19] on stations, tunnels, and vehicles for Amtrak, and Burdett, Ames, and Fardell [273] on the King's Cross Subway station fire all promote new test methods coupled with mathematical modeling to assess potential hazards under real fire conditions.

8.1 Equivalence of U.S. and Foreign Requirements

The U.S. requirements are prescriptive in nature and apply to specific materials without consideration of interrelationships between materials during a fire. By contrast, the German requirements provide a simple performance goal with several prescriptive test methods to judge adherence to the goal. In between is the French requirements with a lofty goal of assessing risk but with a range of acceptance for each individual material. Nearly all the requirements are based on bench-scale test methods.

The German requirements appear to include test methods and criteria to address the flammability of most materials in a manner at least as strict as the U.S. requirements. Notably missing from the German requirements is criteria for insulation materials. This should be included since such materials have been significantly involved in actual fire incidents in passenger guided ground transportation vehicles.

Judging the equivalence of the French requirements is much more difficult. Although test methods similar to those used in the United States, the confusing array of acceptance criteria in the French standards make an exact comparison of the pass-fail criteria impossible. Litant puts the French

requirements in context. He concludes that the French standards do not provide an improvement over the U.S. guidelines. Furthermore, the French specification uses these standards in a "most complicated and contrived manner." The French specification does not include requirements for fire endurance testing of fire barriers. Since the majority of fire in passenger guided ground transportation systems originate beneath the vehicle floor, such testing should be mandatory.

Advances in fire safety engineering have been made in the decades since the original development of the current U.S. guidelines for material selection in passenger guided ground transportation. Better understanding of the underlying phenomena governing fire initiation and growth have led to the development of a new generation of test methods which can better predict the real-scale burning behavior of materials and assemblies from bench-scale measurement methods based on a material's heat release rate. These advances should be incorporated in future designs of passenger guided ground transportation systems.

8.2 Findings

Based on the review conducted in this report, the following findings are most important:

- The DIN 5510 and NFPA 130 goals of providing comparmentation to separate potential hazards and in particular the German requirements to limit the location of most major wiring, equipment, and controls within the walls of passenger spaces should be considered by U.S. car designers.

- The NFPA 130 and DIN 5510 requirements for controlling the vehicle ventilation system in the event of a fire should be included in future vehicle designs. Such a requirement would limit smoke generation and transport within a car and between cars.

- Diesel locomotives should be provided with automatic fire detection and suppression systems within the engine compartments. The design of such a system must consider the likelihood of false alarms.

- Diesel fuel tanks should be protected from impact puncture. Modern fuel tank systems employing bladders or compartmented tanks could further reduce the potential for leaks or limit the quantity of fuel which could leak from a puncture or in a collision. Such tanks would also provide benefits by limiting environmental liability from fuel leaks without fires.

- Appropriate NFPA standards are directly applicable to the fire-safe design and installation of cooking equipment and exhaust. These appear mostly compatible with current Amtrak practice and should be included in future designs.

- For the most part, current requirements for the design and selection of materials for passenger trains in all the countries reviewed have yet to incorporate advances in materials and test methods. Most important in all three approaches is the dependence on outdated bench-scale test methods. For most of the tests, considerable evidence questions their ability to predict real-scale fire test behavior. Two primary tests are considered necessary to judge the fire behavior of materials in passenger trains:

  (1) The Cone Calorimeter, ASTM E 1354, can provide multiple measures of fire performance for materials and assemblies used in the construction of guided ground transportation vehicles. These include ignitability; heat release rate; and release rates for smoke, toxic gases, and corrosive products. Although potential acceptance criteria for materials have been reviewed, additional testing is required to identify actual criteria in consideration of the current state-if-the-art for materials used in passenger guided ground transportation vehicles.

  (2) Standard fire endurance testing, such as that specified in ASTM E 119, provides a measure of the ability of a given construction to prevent the spread of fire from one compartment to another or from the underside of a vehicle to the interior.

  In addition initial *reference* real-scale testing will always be needed for any application. Bench-scale tests, if suitably validated against these real-scale fires, can then be used to provide for most of the needed product testing. Thus, the large-scale test will rarely be needed in practice. But, it must be available for those situations where the bench-scale test is not applicable.

- A decade of research on combustion toxicity has resulted in sufficient understanding to classify products into *ordinary* and those that require special treatment, i.e., those of *extreme toxicity*. From a toxic potency standpoint, this is precisely the information needed to judge a material's acceptability. Most products, including those about which there was significant prior debate, have been shown to lie in the ordinary class. For ordinary materials, heat release rate and the ventilation of the space in which it is burning are more important than it's toxic potency.

- Automatic detectors appropriate to the space and hazard to be monitored should be specified for any potentially hazardous equipment and in spaces not subject to regular monitoring by people, following the requirements of NFPA 130. Alarms from these detectors should alert crew for action. Passengers are most vulnerable while sleeping, and an alarm system complying with Amtrak 307 should be provided in sleeping cars.

- Again utilizing the requirements of NFPA 130, automatic suppression equipment should be provided for any spaces which contain both a significant fuel load and sources capable of

igniting it. Portable extinguishers should be provided in each car, and crew should be trained in their use.

- Reports by the Volpe Center specifically address emergency egress and emergency preparedness for guided ground transportation applications. For this report, three notes are appropriate:

    1) Vehicle design criteria to accommodate passenger egress should be included in the overall system design. Performance criteria for evacuation should be based on the time necessary to evacuate a full vehicle, including any time necessary to bring the vehicle to a safe point for evacuation.

    2) Train personnel should be trained to assist appropriately in emergency situations. Like flight attendants on aircraft, this should be one of the primary duties for train crew and attendants.

    3) Emergency planning documents should be developed to allow local emergency personnel to prepare and train for response to fire incidents. Such documents already exist for some applications.

8.3 Fire Hazard Analysis

Ultimately, fire hazard analysis utilizing necessary data from bench-scale heat release rate measurements can provide a true assessment of the contribution of a material or assembly to the overall fire hazard for identified fire scenarios in passenger guided ground transportation. In addition, such analyses can include the effects of vehicle and system design, detection, suppression, and evacuation and any tradeoffs between multiple effects.

Quantitative hazard analysis techniques have the potential of providing significant cost savings. Alternative protection strategies can be studied within the hazard analysis framework to give the benefit-cost relation for each. In addition, measures are evaluated as a system with their many interactions, including the impact of both structure and contents. Providing these alternatives promotes the design flexibility which reduces redundancies and cost without sacrificing safety. New technology can be evaluated before it is brought into practice, thus reducing the time lag currently required for code acceptance. Thus, quantitative hazard analysis is a powerful complement to existing codes and standards and a useful tool in evaluating improvements to them.

8.4 Future Directions

This report contains a number of specific findings and recommendations which should be applied to the procurement of rail equipment. To demonstrate their practicability and effectiveness, further research is necessary. Such a demonstration project in cooperation with Amtrak could be utilized to validate the approaches and the ability of the industry to utilize the techniques in the design and construction of passenger cars. Several levels of research are appropriate to demonstrate the validity of the new test methods and hazard analysis techniques when applied to passenger trains:

- Evaluation of current materials used in the construction of passenger train vehicles with new heat release rate based test methods. Although criteria have been reviewed for a range of materials, it is unclear how current materials, which have been tested to older generation test methods, will perform. This evaluation will define acceptance criteria for use of these new test methods in a context similar to the current FRA guidelines and provide necessary data for a hazard analysis specific to passenger train vehicles.

- Demonstration of the applicability of the hazard analysis techniques discussed in this report to the evaluation of the overall fire safety of passenger trains. Such a project would evaluate various aspects of system design and assess their relative impact on vehicle fire safety for a range of vehicle design parameters. Application of hazard analysis techniques to the evaluation of present ground transportation vehicles will provide a baseline for futures analyses.

- Verification of the bench-scale criteria and hazard analysis studies through selected real-scale proof testing of assemblies, mock-ups, and, if viable, complete vehicles. Any bench-scale test results are valid only if they provide a measure of real-scale fire performance in the actual end-use configuration.

These areas of research address the fire safety of vehicles used in passenger trains. Additional areas of study on the interaction between vehicles and the operating environment, particularly tunnels and underground stations could significantly increase the necessary research effort. However, these are currently viewed as having less impact on vehicle fire safety than the vehicle specific areas outlined above.

In addition, procuring authorities need to become familiar with the combination of new test methods and hazard analysis techniques. Ongoing procurement of next generation passenger equipment by Amtrak could be affected by consultation with Amtrak and FRA staff to provide better and more flexible design criteria and specification for new equipment.

9. References

[1] Federal Railroad Administration, Rail Passenger Equipment; Reissuance of Guidelines for Selecting Materials to Improve Their Fire Safety Characteristics, *Federal Register,* Vol. 54, No. 10, 1837-1840 (1989).

[2] Federal Railroad Administration, Rail Passenger Equipment; Reissuance of Guidelines for Selecting Materials to Improve Their Fire Safety Characteristics, *Federal Register,* Vol. 49, No. 217, 44052-44584 (1984).

[3] Federal Railroad Administration, Rail Passenger Equipment; Guidelines for Selecting Materials to Improve Their Fire Safety Characteristics, *Federal Register,* Vol. 49, No. 162, 33076-33078 (1984).

[4] Urban Mass Transportation Administration, Recommended Fire Safety Practices for Rail Transit Materials Selection, *Federal Register,* Vol. 49, No. 158, (1984).

[5] Specification for Flammability, Smoke Emissions and Toxicity, Amtrak Specification No. 352, National Railroad Passenger Corporation, April 29 1991.

[6] National Fire Protection Association, NFPA 130, Standard for Fixed Guideway Transit Systems, 1990 edition, NFPA, Quincy, MA (1990).

[7] The Passing of the Wooden Passenger Car from This Railroad, Pennsylvania Railroad Information (1928).

[8] Troy, J. J., Fire Protection Provisions for Rapid Transit Systems, *Fire J. 70,* 13-17 (1976).

[9] Wilkins, J. J. and Cavanaugh, R. R., Plastics and Rail Transportation, Polymeric Materials and Their Use in Transportation, April 27-29, 1977, The Polytechnic Institute of New York (1977).

[10] Cavanaugh, R. R., Selection of Materials for Ground Transportation Vehicles, in Proceeding of the Sixth International Conference on Fire Safety, January 12-16, 1981, Menlo Park, CA (1981).

[11] Passenger Fire Safety in Transportation Vehicles, Arthur D. Little Report No. C-78203 to Transportation Systems Center, U.S. Department of Transportation (1975).

[12] Fire Safety Aspects of Polymeric Materials, Volume 8, Land Transportation Vehicles, National Materials Advisory Board Pub. NMAB 318-8, National Academy of Sciences (1979).

[13] Railroad Accident Report – Fire Onboard Amtrak Passenger Train No. 11, the Coast Starlight, Gibson, California, June 23, 1984, Natl. Transportation Safety Board, Report No. NTSB/RAR-83/03 (1983).

[14] Crossland, B., Setting the Scene for the King's Cross Fire Symposium, in The King's Cross Underground Fire: Fire Dynamics and the Organization of Safety, The Institution of Mechanical Engineers, London (1989).

[15] Moodie, K., Damage Assessment and Overview of the Technical Investigation, in The King's Cross Underground Fire: Fire Dynamics and the Organization of Safety, The Institution of Mechanical Engineers, London (1989).

[16] Rakaczky, J. A., Fire and Flammability Characteristics of Materials Used in Rail Passenger Cars. A Literature Survey, U. S. Army Ballistic Research Laboratory, Report No. ARBRL-MR-03009 (1980).

[17] Hathaway, W. T. and Litant, I., Assessment of Current U. S. Department of Transportation Fire Safety Efforts, U. S. Department of Transportation Report No. UMTA-MA-06-0051-79-4 (1979).

[18] Peacock, R. D. and Braun, E., Fire Tests of Amtrak Passenger Rail Vehicle Interiors, Natl. Bur. Stand. (U. S.), Technical Note 1193 (1984).

[19] Schirmer Engineering Corporation, Life Safety Study and Computer Modeling Analysis for New York City Railroad Tunnels and Pennsylvania Station, contract to The National Railroad Passenger Corporation, Sec No. 15-890-29-04-00.

[20] Dorer, R. M., Markos, S. H., Wlodyka, R. A., Lee, H. S., Coltman, M., Hathaway, W. T., Barrington, A. E. and Brecher, A., Safety of High Speed Magnetic Levitation Transportation Systems: German High Speed Maglev Train Safety Requirements – Potential for Application in the United States, U. S. Department of Transportation, Report No. DOT/FRA/ORD-92/02, DOT/VNTSC/FRA/92-3 (1992).

[21] A Comparison of U.S. and Foreign Safety Regulations for Potential Application to Maglev Systems, Arthur D. Little Report No. 63057 to the Volpe National Transportation Systems Center (1992).

[22] Babrauskas, V., Levin, B. C., Gann R. G., Paabo, M., Harris, R. H., Peacock, R. D., and Yusa, S., Toxic Potency Measurement for Fire Hazard Analysis, Natl. Inst. Stand. Technol., Spec. Pub. 827 (1991).

[23] Fires in Mass Transit Vehicles: Guidelines for the Evaluation of Toxic Hazards, Natl. Materials Advisory Board (NRC) Report No. NMAB-462 (1991).

[24] Babrauskas, V., Peacock, R. D., Braun, E., Bukowski, R. W., and Jones, W. W., Fire Performance of Wire and Cable: Reaction-to-Fire Tests – A Critical Review of the Existing Methods and of New Concepts, Natl. Inst. Stand. Technol., Tech. Note 1291 (1991).

[25] Troitzsch, J., International Plastics Flammability Handbook: Principles – Regulations – Testing and Approval, 2nd Edition, Oxford University Press, New York (1990).

[26] Litant, I., Comparison of U.S. and French Regulations for Rail Transit Fire Safety, presented at Thirteenth International Conference on Fire Safety, San Francisco, CA (1988).

[27] Bukowski, R. W. and Tanaka, T., Toward the Goal of a Performance Fire Code, *Fire and Materials*, Vol. 15, pp. 175-180 (1991).

[28] German Federal Railways, Railroad Construction and Traffic Regulations (EBO), May 8, 1967 Federal Law Gazette (BGBl] 1967 (with updates to the 1982 edition), Pt. II, p 1563 (1982).

[29] Preventive Fire Protection in Railway Vehicles; Levels of Protection, Fire Preventive Measures and Certification, DIN 5510 Parts 1-8, Deutsches Institut Für Normung e.V. (1988).

[30] Directive Concerning the Construction and Operation of Streetcars, 2648 Federal Law Journal, 1987

[31] High-Speed Maglev Trains: German Safety Requirements RW-MSB (translation of German Regelwerk Magnetschnellbahnen Sicherheitstechnische Anforderungen), U. S. Department of Transportation, Report No. DOT/FRA/ORD-92/01 (1992).

[32] Regulations relating to fire protection and fire-fighting measures in passenger-carrying railway vehicles or assimilated vehicles used on international services, UIC code 564-2 OR, International Union of Railways, (1991)

[33] Young, R., Behaviour of Rail Vehicle Components in Fires, Proceeding of Fire Performance of Materials in Mass Transport, May 26, 1988, Rapra Technology Limited, Shawbury, UK (1988).

[34] BS 6853, British Standard Code of Practice for Fire precautions in the design and construction of railway passenger rolling stock, British Standards Institution, London (1987).

[35] Cheong, S. Y., Fire Protection and Fire Safety Features in Singapore's Mass Rapid Transit System, *Fire Engineers J.*, Vol. 57, No. (1992).

[36] Sato, S. and Osaka, T., Study on Fire Protection Measures for Railcars, *Japanese Railway Engineering*, No. 123, pp 16-22 (1993).

[37] Federal Trade Commission Complaint on the Flammability of Plastic Products, File No. 732-3040, May 31, 1973.

[38] Emmons, H.W., Fire and Fire Protection, *Sci. Amer.*, Vol. 231, 21-27 (July 1974).

[39] Östman, B., and Nussbaum, R., National Standard Fire Tests in Small Scale Compared with the Full-Scale ISO Room Test (Rapport I 870217), Träteknik Centrum, Stockholm (1987).

[40] *Fire Test Standards*, Second Edition, American Society for Testing and Materials, Philadelphia (1988).

[41] Roux, H., Roux International, personal communication.

[42] Tanaka, T., Performance Based Design Method for Fire Safety of Buildings, *Proceedings of the 11th UJNR*, NISTIR 4449, Natl. Inst. Stand. Technol., 269-291 pp, (1990).

[43] National Building Fire Safety Project of the Building Regulation Review Task Force, Microeconomic Reform: Fire Regulation, Claude Eaton, project coordinator, (May 1991).

[44] Hathaway, W. T., Commonalities in Transportation Fire Safety: Regulations, Research and Development, and Data Bases, U.S. Department of Transportation, Transportation Systems Center, Report DOT-TSC-OST-80-5 (1980).

[45] Code of Federal Regulations, Title 49, Transportation, Parts 200-240. Federal railroad Administration. Office of the Federal Register, National Archives and Records Administration (1992).

[46] Code of Federal Regulations, Title 49, Transportation, Part 229, Railroad Locomotive Safety Standards, U.S. Department of Transportation, Office of the Secretary.

[47] Specification for High Speed Lightweight Dual Power Locomotives for Amtrak Systemwide Passenger Service, AMD-125DP, Amtrak Specification No. 581, National Railroad Passenger Corporation, May 1, 1991.

[48] Specification for Diesel Locomotives for Amtrak Systemwide Passenger Service, AMD-103DC, AMD-103AC, and AMD 125, Amtrak Specification No. EED-004, National Railroad Passenger Corporation, January 5, 1990.

[49] Burnett, J., Fire Safety Concerns for Rail Rapid Transit Systems, *Fire Safety J.*, Vol. 5, pp 3-7 (1984/85).

[50] Specification for Dining Car Food Service Equipment, Amtrak Specification No. 350, National Railroad Passenger Corporation, March 12, 1991.

[51] Amtrak Specification No. 576, National Railroad Passenger Corporation Technical Specification, Viewliner Intercity Passenger Car, National Railroad Passenger Corporation, January 31, 1992.

[52] National Fire Protection Association, NFPA 96, Standard for Installation of Equipment for the Removal of Smoke and Grease-Laden Vapors from Commercial Cooking Equipment, 1991 edition, NFPA, Quincy, MA (1991).

[53] Standard Test Method for Surface Flammability of Materials Using a Radiant Heat Energy Source, ASTM E-162, Annual Book of ASTM Standard, Volume 04.07, American Society for Testing and Materials (1988).

[54] Standard Test Method for Surface Flammability of Cellular Materials Using a Radiant Heat Energy Source, ASTM D 3675, Annual Book of ASTM Standards, Volume 09.02, American Society for Testing and Materials (1990).

[55] Standard Test Method for Specific Optical Density of Smoke Generated by Solid Materials, ASTM E-662, Annual Book of ASTM Standards, Volume 04.07, American Society for Testing and Materials (1983).

[56] Robertson, A. F., Gross, D., and Loftus, J., A New Test Method for Evaluating Flammability of Interior Finishes, Natl. Bur. Stand. (U.S.) Report 4364 (1955).

[57] Fang, J. B., Fire Buildup in a Room and the Role of Interior Finish Materials, Natl. Bur. Stand. (U.S.), Tech. Note 879 (1975).

[58] Fang, J. B. and Gross, D., Contribution of Interior Finish Materials to Fire Growth in a Room, Proceedings of Fire Safety Research Symposium, August 22, 1973, Natl. Bur. Stand. (U.S.), Special. Pub. 411 (1973).

[59] Standard Test Method for Critical Radiant Flux of Floor Covering Systems Using a Radiant Heat Energy Source, ASTM E-648, Annual Book of ASTM Standard, Volume 04.07, American Society for Testing and Materials (1988).

[60] Lawson, J. R., Fire Tests and Flooring Materials, Proceedings of the Second Fire and Materials International Conference, September 23-24, 1993, Arlington, VA, pp. 253-262 (1993).

[61] Hartzell, L. G., Development of a Radiant Panel Test for Flooring Materials, Natl. Bur. Stand. (U.S.), NBSIR 74-495 (1974).

[62] Benjamin, I. A. and Adams, C. H., Proposed Criteria for Use of the Critical Radiant Flux Test Method, Natl. Bur. Stand. (U.S.), NBSIR 75-950 (1975).

[63] Adams, C. H. and Davis, S., Development of the Flooring Radiant Panel Test as a Standard Test Method, Natl. Bur. Stand. (U.S.), NBSIR 79-1959 (1980).

[64] First International Fire Prevention Congress, The Official Congress Report, British Fire Prevention Committee, London (1903).

[65] Shoub, H., Early History of Fire Endurance Testing in the United States, ASTM Special Technical Publication 301, American Society for Testing and Materials, Philadelphia, PA, pp 1-9 (1961).

[66] Standard Test method for Fire Test of Building construction and Materials, ASTM E-119, Annual Book of ASTM Standard, Volume , American Society for Testing and Materials (1990)

[67] Babrauskas, V. and Williamson, R. B., The Historical Basis of Fire Resistance Testing, *Fire Technology*, Vol. 14, Nos. 3&4, 184-194, 304-316 (1978).

[68] British Standards Specification 476, British Standards Institution, London (1936).

[69] Federal Aviation Regulation – FAA Airworthiness Standard, Part 25, Section 25.853, Federal Register, Vol. 34, p. 130 (1969).

[70] Federal Test Standard No. 191, Method 5903.2, Flame Resistance of Cloth, Vertical, July 9, 1971.

[71] Babrauskas, V., Peacock, R. D., Braun, E., Bukowski, R. W., and Jones, W. W., Fire Performance of Wire and Cable: Reaction-to-Fire Tests – A Critical Review of the Existing Methods and of New Concepts, Natl. Inst. Stand. Technol., Tech. Note 1291 (1991).

[72] Hirschler, M. M., Survey of Fire Testing of Electrical Cables, *Fire and Materials*, Vol. 16, 107-118 (1992).

[73] Kline, L.M., Burning, Arcing, Ignition, and Tracking of Plastics Used in Electrical Appliances (Bulletin of Research No. 55). Underwriters' Laboratories, Chicago, IL (1964).

[74] Standard Methods of Testing Crosslinked Insulations and Jackets for Wire and Cable (D 470). American Society for Testing and Materials, Philadelphia, PA.

[75] Standard Methods of Testing Thermoplastic Insulations and Jackets for Wire and Cable (D 2633). American Society for Testing and Materials, Philadelphia, PA.

[76] Gaffney, J., The Significance of the New FR-1 Flame Test, *Wire J.*, Vol. 6, 82-84 (Oct. 1973).

[77] McIlveen, E.E., Fire-Retardant Cable Systems, *IEEE Trans. on Industry Applications*, Vol. IA-11, 301-307 (1975).

[78] DeLucia, M.A., Highly Fire-Retardant Navy Shipboard Cables, pp. 281-290 in 25th Intl. Wire and Cable Symp., U.S. Army Electronics Command, Cherry Hill, NJ (1976).

[79] Working Group Report for Design and Installation of Wire and Cable Systems in Power Generating Stations, *IEEE Trans. Power App. Syst.*, PAS-90, 2267-2290 (1971).

[80] IEEE Standard for Type Test of Class 1E Electric Cables, Field Splices, and Connections for Nuclear Power Generating Stations (ANSI/IEEE Std 383-1974). The Institute of Electrical and Electronics Engineers, New York, NY (1974).

[81] Tewarson, A., Khan, A. A., and Steciak, J., Combustibility of Electrical Wire and Cable for Rail Rapid Transit Systems Volume I: Flammability, Urban Mass Transportation Administration, Report No. UMTA-MA-06-0025-83-6.

[82] Daly, J.M., Flammability and Toxicity Testing of Wire and Cable, *IEEE Trans. on Industry Applications*, Vol. 26, 476-482 (1990).

[83] Levin, B.C., Fowell, A.J., Birky, M.M., Paabo, M., Stolte, A., and Malek, D., Further Development of a Test Method for the Assessment of the Acute Inhalation Toxicity of Combustion Products, Natl. Bur. Stand. (U.S.), NBSIR 82-2532 (1982).

[84] Levin, B.C., The National Bureau of Standards Toxicity Test Method, *Fire Technology*, Vol. 21, 134-145 (1985).

[85] Mniszewski, K., Campbell, J., Waterman, T., and Wakeley, H., Study of Smoke Detection and Fire Extinguishment for Rail Transit Vehicles, Urban Mass Transportation Admin., Report No. UMTA-MA-06-0153-83-3 (1983).

[86] Ketola, H. N., Evaluation and Testing of Rail Transit Undercar Fire Detection and Suppression Systems, Urban Mass Transportation Admin., Report No. UMTA-MA-06-0120-89-1 (1989).

[87] Markos, S. H., Recommended Emergency Preparedness Guidelines for Passenger Trains, U.S. Department of Transportation, Federal Railroad Administration, Report No. DOT/FRA/ORD-93/24 (1993).

[88] Special provisions concerning fire precautions and fire-fighting measures on motive power units and driving trailers in international traffic, UIC code 642 OR, International Union of Railways, (1982)

[89] BS 5852, British Standard Methods of test for Assessment for the ignitability of upholstered seating by smouldering and flaming ignition sources, British Standards Institution, London (1987).

[90] Kaminski, A., The Current State of European Railway Fire Safety Research, Urban Mass Transportation Administration, Report No. UMTA-MA-06-0152-85-2 (1985).

[91] NF F 13-197, Railway Rolling Stock, Air Conditioning Treated Air Sheaths, edited by l'association francaise de normalisation (afnor), tour europe cedex 7, 92080 paris la defense, FRANCE (1989).

[92] NF F 16-101, Railway Rolling Stock, Fire Behaviour, Choice of Materials, edited by l'association francaise de normalisation (afnor), tour europe cedex 7, 92080 paris la defense, FRANCE (October, 1988).

[93] NF F 16-102, Railway Rolling Stock, Fire Behaviour, Choice of Materials, Application to Electrical Equipment, edited by l'association francaise de normalisation (afnor), tour europe cedex 7, 92080 paris la defense, FRANCE (October, 1989).

[94] NF P 92-501 - NF P 92-510, Building Materials, Reaction-to-Fire Tests, edited by l'association francaise de normalisation (afnor), tour europe cedex 7, 92080 paris la defense, FRANCE (October, 1975).

[95] NF T 51-071, Plastics, Determination of the Oxygen Number, edited by l'association francaise de normalisation (afnor), tour europe cedex 7, 92080 paris la defense, FRANCE (May, 1977).

[96] NF C 20-455, Test Methods, Fire Behaviour, Glow Wire Test, edited by l'association francaise de normalisation (afnor), tour europe cedex 7, 92080 paris la defense, FRANCE (April, 1980).

[97] NF G 07-128, Textiles, Behaviour in Fire, Determination of the Oxygen Number, edited by l'association francaise de normalisation (afnor), tour europe cedex 7, 92080 paris la defense, FRANCE (June, 1989).

[98] NF F 16-103, Railway Rolling Stock, Fire Protection and Fire Fighting, edited by l'association francaise de normalisation (afnor), tour europe cedex 7, 92080 paris la defense, FRANCE (June, 1989).

[99] Standard Test Method for Determining Ignition and Flame Spread Properties, ASTM E-1321, Annual Book of ASTM Standards, Volume 04.07, American Society for Testing and Materials (1990).

[100] FD X 70-100, Essais de comportement au feu, Analyse des gas de combustion et de pryolyse, Method au four tubulaire (Fire tests - Analysis of combustion and pyrolysis gases- Pipe Still method), edite par l'association francaise de normalisation (afnor), tour europe cedex 7, 92080 paris la defense, FRANCE (October, 1981).

[101] Levin, B. C. and Gann, R. G., Toxic Potency of Fire Smoke: Measurement and Use, in Fire and Polymers – Hazards Identification and Prevention, Proceedings of the 197th National Meeting of the ACS, April 9-14, 1989, Dallas, TX, American Chemical Society, Washington, DC pp. 3-11 (1990).

[102] Fire-Smoke-Toxicity (FST) Test Specification, Airbus Industrie Technical Specification ATS-1000.001 (1989).

[103] Standard Guide for Measurement of Gases Present or Generated During Fires (E 800-88). American Society for Testing and Materials, Philadelphia (1991).

[104] Fire Behaviour of Material and Structures of Railway Vehicles – Use of Halon Extinguishers in Railway Rolling Stock, Office For Research and Experiments of the International Union of Railways, Report No. 17 (1991).

[105] Emergency Evacuation from Amtrak Trains, National Railroad Passenger Corporation, Booklet No. NRPC 1910 (1989).

[106] Technical Dossier for Intervention in the Case of a Train Accident, SNCF Equipment Management, Brochure No. 20 (1989).

[107] Cabos, H., Preventive Fire Protection in Construction of Railway Cars, Eisenbahntechnische Rundschau, Vol. 39, No. 4 (1990).

[108] Preventive Fire Protection in Railway Vehicles; Electrical Operating Means; Safety, DIN 5510 Part 5, Deutsches Institut Für Normung e.V. (1988).

[109] Preliminary Guidelines for Preventive Fire Protection for Passenger Vehicles in Accordance with the Directive Concerning the Construction and Operation of Streetcars (BOStrab), Version 15 March 1985

[110] Fire Behavior of Building Materials and Building Components, DIN 4102 Part 1, Deutsches Institut Für Nurmong (May 1991)

[111] Standard Test Method for Density of Smoke from the Burning or Decomposition of Plastics ASTM D-2843, Annual Book of ASTM Standard, Volume 8.02, American Society for Testing and Materials (1990)

[112] Standard Test Method for Specific Optical Density of Smoke Generated by Solid Materials for Aerospace Applications, ASTM F-814, Annual Book of ASTM Standards, Volume 15.03, American Society for Testing and Materials (1990)

[113] Fire behavior of building materials and components small scale test furnace, DIN 4102 part 8, Deutsches Institut Für Nurmong (May 1996)

[114] Bulletin Concerning the Testing of the Fire Behavior of Solid Materials, DS 899/35, German Federal Railroad (Dec. 1972).

[115] Peterson, J. M., FAA Regulations on Aircraft Cabin Wall Materials, in Heat Release in Fires, p. 567 (1992)

[116] Test Method for Determining the Fire -Resistance of Rigid Non-Thermoplastic Materials, UIC code 564-2 OR, International Union of Railways, (1991)

[117] Fire Behavior of Building Materials and Building Components Building Components Definitions, Requirements and Test, DIN 4102 Part 2, Deutsches Institut Für Nurmong (September 1977)

[118] Fire Behavior of Building Materials and Building Components Fire Barriers, Barriers in Lift Wells and Glazing Resistant against Fire Definitions, Requirements and Tests, DIN 4102 Part 5, Deutsches Institut Für Nurmong (September 1977)

[119] DIN 53 436 Erzeugung thermischer Zersetzungsprodukte von Werkstoffen unter Luftzufuhr und ihre toxikologische Prüfung.

[120] Einbrodt, H. J., Hupfeld, F. H., Prager, F. H., and Sand, H., The Suitability of the DIN 53436 Test Apparatus for the Simulation of a Fire Risk Situation with Flaming Combustion, *J. Fire Sciences*, Vol. 2, pp. 427-438 (1984).

[121] Prager, F. H., Einbrodt, H. J., Hupfeld, J., Müller, B., and Sand, H., Risk Oriented Evaluation of Fire Gas Toxicity Based on Laboratory Scale Experiments – The DIN 53436 Method, *J. Fire Sciences*, Vol. 5, pp. 308-325 (1987).

[122] Prager, F. H., Assessment of the Fire Model DIN 53436, *J. Fire Sciences*, Vol. 6 pp. 3-24 (1988).

[123] Preventive Fire Protection in Railway Vehicles; Auxiliary Measures, Function of the Emergency Brake Equipment, Information Systems, Fire Alarm Systems, Fire Fighting Equipment, Safety Requirements, DIN 5510 Part 6, Deutsches Institut Für Normung e.V. (1988).

[124] Completing the Internal Market, White Paper from the Commission to the European Council, COM(85) 310 final, Brussels, 1985.

[125] Council Directive of 21 December 1988 on the approximation of laws, regulations and administrative provisions of the Member States relating to Construction Products (89/106/EEC). Published in Official Journal of the European Communities, No. L 40, pp. 12-26 (February 11, 1989).

[126] Babrauskas, V., Development of the Cone Calorimeter — A Bench Scale Heat Release Rate Apparatus Based on Oxygen Consumption, *Fire and Materials*, Vol. 8, 81-95 (1984).

[127] Proposed Standard Method for Room Fire Test of Wall and Ceiling Materials and Assemblies, 1982 Annual Book of ASTM Standards, Part 18. American Society for Testing and Materials, Philadelphia (1982).

[128] Proceedings of EUREFIC Seminar, InterScience Communications Ltd, London (1991). In the U.S. this volume can be purchased from Technomic Publishing, 851 New Holland Avenue, Lancaster, PA 17604.

[129] Babrauskas, V., Bench-Scale Methods for Prediction of Full-Scale Fire Behavior of Furnishings and Wall Linings, Technical Report 84-10, Society of Fire Protection Engineers (1984).

[130] Babrauskas, V., pp. 31-41 in Spacecraft Fire Safety (NASA Conference Publication 2476), NASA Lewis Research Center, Cleveland, OH (1986).

[131] Standard Test Method For Behavior of Materials in a Vertical Tube Furnace at 750°C (ASTM E 136). American Society for Testing and Materials, Philadelphia.

[132] Fire Tests — Building materials — Non-combustibility test (ISO 1182). International Organization for Standardization, Geneva.

[133] Babrauskas, V., Urbas, J., and Richardson, L., Non-combustibility, Chapter 8(e) in Heat Release in Fires, Babrauskas, V. and Grayson, S. J., Eds., Elsevier Applied Science, New York (1992).

[134] Babrauskas, V. and Mulholland, G. W., Smoke and Soot Determination in the Cone Calorimeter, in Mathematical Modeling of Fires, Mehaffey, J. R., Ed., American Society for Testing and Materials, ASTM STP 983, pp. 83-194 (1987).

[135] Hirschler, M. M., How to Measure Smoke Obscuration in a Manner Relevant to Fire Hazard Assessment: Use of Heat Release Calorimetry Test Equipment, *J. of Fire Sci.*, Vol. 9, pp 183-222 (1991).

[136] Standard Test Method for Heat and Visible Smoke Release Rates for Materials and Products Using an Oxygen Consumption Calorimeter, ASTM E-1354, Annual Book of ASTM Standard, Volume 04.07, American Society for Testing and Materials (1990).

[137] Standard Test Method for Heat and Visible Smoke Release Rates for Materials and Products, ASTM E-906, Annual Book of ASTM Standard, Volume 04.07, American Society for Testing and Materials (1983).

[138] Fires in Mass Transit Vehicles: Guidelines for the Evaluation of Toxic Hazards, Natl. Mat. Advisory Board, Report NMAB-462 (1991).

[139] Petajan, J.H., Voorhees, K.J., Packham, S.C., Baldwin, R.C., Einhorn, I.N., Grunnet, M.L., Dinger, B.G., and Birky, M.M., Extreme Toxicity From Combustion Products of a Fire-Retarded Polyurethane Foam, *Science*, Vol. 187, 742-744 (1975).

[140] Levin, B.C., A Summary of the NBS Literature Reviews on the Chemical Nature and Toxicity of the Pyrolysis and Combustion Products From Seven Plastics: Acrylonitrile-Butadiene-Styrenes (ABS), Nylons, Polyesters, Polyethylenes, Polystyrenes, Poly(vinyl chlorides) and Rigid Polyurethane Foams, Natl. Bur. Stand. (U.S.), NBSIR 85-3267 (1986). Also *Fire and Materials*, Vol. 11, 143-157 (1987).

[141] Kaplan, H.L., Grand, A.F., and Hartzell, G.E., Combustion Toxicology: Principles and Test Methods, Technomic Publishing Co., Inc., Lancaster, PA (1983).

[142] Anderson, R.C., Croce, P.A., Feeley, F.G., III, Sakura, J.D., Study to Assess the Feasibility of Incorporating Combustion Toxicity Requirements Into Building Material and Furnishing Codes of New York State. Final report to Department of State, Office of Fire Prevention and Control, Albany, New York, from Arthur D. Little, Inc., Cambridge, MA (1983).

[143] New York State Uniform Fire Prevention and Building Code, Combustion Toxicity Testing and Regulations for Implementing Building Materials and Finishes; Fire Gas Toxicity Data File. Article 15, Part 1120, NY State, Department of State, Office of Fire Prevention and Control, Albany, NY (1986).

[144] Hilado, C.J., and Miller, C.M., The Effect of Changes in the USF/NASA Toxicity Screening Test Method on Data From Some Cellular Polymers, *J. Comb. Tox.*, Vol. 3, 237-258 (1976).

[145] Alexeeff, G.V., and Packham, S.C., Use of a Radiant Furnace Fire Model to Evaluate Acute Toxicity of Smoke, *J. Fire Sciences*, Vol. 2, 306-320 (1984).

[146] Levin, B.C. and Gann, R.G., Toxic Potency of Fire Smoke: Measurement and Use, pp. 3-11 in Fire and Polymers: Hazards identification and Prevention ed. by G.L. Nelson, ACS Symposium Series 425, American Chemical Society , Washington, DC (1990).

[147] Levin, B.C., Paabo, M., Gurman, J.L., and Harris, S.E., Effects of Exposure to Single or Multiple Combinations of the Predominant Toxic Gases and Low Oxygen Atmospheres Produced in Fires. *Fundam. Appl. Toxicol.*, Vol. 9, 236-250 (1987).

[148] Levin, B.C., Paabo, M., Gurman, J.L., Clark, H.M., and Yoklavich, M.F., Further Studies of the Toxicological Effects of Different Time Exposures to the Individual and Combined Fire Gases: Carbon Monoxide, Hydrogen Cyanide, Carbon Dioxide, and Reduced Oxygen, pp. 249-252 in Polyurethane '88, Proceedings of the 31st Society of Plastics Meeting, Philadelphia, PA, October 1988, Technomic Publishing Company, Inc., Lancaster, PA.

[149] Braun, E., Davis, S., Klote, J.H., Levin, B.C., and Paabo, M., Assessment of the Fire Performance of School Bus Interior Components (NISTIR 4347). [U.S.] Natl. Inst. Stand. and Tech. (1990).

[150] Caldwell, D.J. and Alarie, Y.C., A Method to Determine the Potential Toxicity of Smoke from Burning Polymers: I. Experiments With Douglas Fir., *J. Fire Sci.*, Vol. 8, 23-62 (1990).

[151] Levin, B.C., Babrauskas, V., Braun, E., Gurman, J., and Paabo, M., An Exploration of Combustion Limitations and Alternatives to the NBS Toxicity Test Method, Natl. Bur. Stand., NBSIR 85-3274 (1985).

[152] NIBS Fire Hazards Conference I Proceedings, National Institute of Building Sciences, Washington (1986).

[153] NIBS Fire Hazard Conference III Proceedings, National Institute of Building Sciences, Washington (1988).

[154] Norris, J.C., National Institute of Building Sciences Toxicity Hazard Test, pp. 146-155 in Proc. of the Joint Mtg. of the Fire Retardant Chemicals Assn. and the Soc. of Plastics Engineers, Technomic Publishing, Lancaster, PA (1988).

[155] Babrauskas, V., Levin, B. C., Gann, R. G., Paabo, M., Harris, R. H., Jr., Peacock, R. D., and Yusa, S., Toxic Potency Measurement for Fire Hazard Analysis, Natl. Inst. Stand. Technol, Special Pub. 827 (1991).

[156] Peacock, R. D. and Babrauskas, V., Analysis of Large-scale Fire Test Data, *Fire Safety J.*, Vol. 17, pp 387-414 (1991).

[157] Hawthorne, B. J., Fire Resistance of Plastics in Railway Coaches, *Fire*, 649-651 (1966).

[158] Jenkins, C. E., BART Experience with New Seat Materials, *J. Consumer Product Flamm.*, Vol. 9, No. 1, pp. 20-30 (1982).

[159] Braun, E., Fire Hazard Evaluation of BART Vehicles, Natl. Bur. Stand. (U.S.), NBSIR 78-1421 (1978).

[160] Goldsmith, A., Flammability Characteristics of Vehicle Interior Materials, Final Technical Report, Project J6152, IIT Research Institute, Chicago, IL (1969).

[161] Flammability of Interior Materials – Passenger Cars, Multi-Purpose Passenger Vehicles, Trucks, and Buses, Title 49, Transportation, Code of Federal Regulations, Part 571.302.

[162] Braun, E., Report of Fire Test on an AM General Metro Bus, Natl. Bur. Stand. (U.S.), NBSIR 75-718 (1975).

[163] Braun, E., A Fire Hazard Evaluation of the Interior of WMATA Metrorail Cars, Natl. Bur. Stand. (U.S.), NBSIR 75-971 (1975).

[164] Birky, M. M., et. al., Measurements and Observation of the Toxicological Hazard of Fire in a Metrorail Interior Mock-Up, Natl. Bur. Stand. (U.S.), NBSIR 75-966 (1975).

[165] Nelson, G. L., et. al., Material Performance in Transportation Vehicle Assemblies, *J. of Fire and Flammability*, Vol. 8, p. 262 (1977).

[166] Göransson, U. and Lundqvist, A., Fires in buses and trains, fire test methods, Swedish National Testing and Research Institute, SP Report No. 1990:45 (1990).

[167] Braun, E., Davis, S., Klote, J. H., Levin, B. C., and Paabo, M., Assessment of the Fire Performance of School Bus Interior Components, Natl. Inst. Stand. Technol., NISTIR 4347 (1990).

[168] Smith, E. E., Fire Safety Evaluation of Rapid Transit System, Phase I Report to the Transit Development Corporation, Washington, DC, unpublished (1976).

[169] Smith E. E., Fire Safety Evaluation of Rapid Transit Systems, Proceedings of the International Conference on Fire Safety, January 17 to 21, 1983, San Francisco, CA, pp. 85-100 (1983).

[170] Mikkola, E., and Wichman, I.S., On the Thermal Ignition of Combustible Materials, *Fire and Materials*, Vol. 14, 87-96. (1989).

[171] Smith, E. E., Application of Release Rate Data for Hazard Load Calculations, *Fire Technology*, Vol. 10, No. 3, pp. 181-186 (1974).

[172] Williamson, R. B., Analysis of BART Fire Hardening Program, Report to BART (April 1981).

[173] McGuire, J. H., The Spread of Fire in Corridors, *Fire Technology,* Vol. 4, No. 2, p. 103 (1968).

[174] Nelson, G. L., Bridgman, A. L., O'Connell, W. J. J., and Williams, J. B., Material Performance in Transportation Vehicle Interiors, *J. Fire and Flammability,* Vol. 8, pp 262-278 (1977).

[175] Bridgman, A. L., and Nelson, G. L., Radiant Panel Tests on Engineering Plastics, Proceedings of the International Conference on Fire Safety, January 17 to 21, 1983, San Francisco, CA, pp. 191-226 (1983).

[176] Hathaway, W. T. and Litant, I., Rationale for Recommended Fire Safety Practices for Rail Transit Materials Selection, Urban Mass Transportation Administration, Report UMTA-MA-06-0098-82-1 (1983).

[177] Bieniarz, R. D., Fire Experiments on Structural Foam Plastic Equipment Enclosures, Underwriters Laboratories, Inc. report for the Society of the Plastics Industry (1981).

[178] Nicholas, E. B., Evaluation of Existing Flammability Test Methods by Comparison of the Flammability Characteristics of Interior Materials, Federal Aviation Administration, Report No. FAA-NA-79-46 (1980).

[179] Standard Test Method for Heat and Visible Smoke Release Rates for Materials and Products, ASTM E-906, Annual Book of ASTM Standard, Volume 04.07, American Society for Testing and Materials (1983).

[180] Quintiere, J. G., An Assessment of Correlations Between Laboratory and Full-Scale Experiments for the FAA Aircraft Fire Safety Program, Part 4: Flammability Tests, Natl. Bur. Stand. (U. S.), NBSIR 82-2525 (1982).

[181] Bonneres, F. J. M. and Allender, P.J., Fire Hazard Evaluation for Rapid Transit Trains, pp. 30-44 in Fire Retardants: Proceedings of 1978 International Symposium on Flammability and Fire Retardants, Bhatnagar, V. M., ed. May 18-19, 1978, Toronto Canada, Technonic Publishing Co., Westport, CT (1978).

[182] Babrauskas, V. and Peacock, R. D., Heat Release Rate: The Single Most Important Variable in Fire Hazard, *Fire Safety J.,* Vol. 18, No. 3, pp 255-272 (1992).

[183] Breden, L. H. and Meisters, M., The Effects of Sample Orientation in the Smoke Density Chamber, *J. Fire Flammability,* Vol. 7, pp 234-247 (1976).

[184] Babrauskas, V., Applications of Predictive Smoke Measurement, *J. Fire Flammability,* Vol. 12, pp. 51-64 (1981).

[185] Quintiere, J. G., Smoke Measurements: An Assessment of Correlations Between Laboratory and Full-Scale Experiments, *Fire and Materials,* Vol. 6 Nos. 3/4, pp. 145-160 (1982).

[186] Babrauskas, V., Smoke Measurement Results from the Cone Calorimeter, in Proceedings of the 8th Joint Panel Meeting UJNR Panel on Fire Research and Safety, May 13-21, 1985, pp. 420-434 (1985).

[187] Christian, W. J. and Waterman, T. W., Fire Behavior of Interior Finish Materials, *Fire Technology*, Vol. 6, No. 3, p. 155 (1970).

[188] Christian, W. J. and Waterman, T. E., Ability of Small-Scale Tests to Predict Full-Scale Smoke Production, *Fire Technology*, Vol. 7, No. 4, pp. 332-344 (1972).

[189] Christian, W. J., Correlation Between Laboratory Flammability Tests and Fires, in proceedings of Flammability Characteristics of Polymeric Materials, June 6-12, 1970, University of Detroit (1970).

[190] Standard Test Method for Heat and Visible Smoke Release Rates for Materials and Products Using an Oxygen Consumption Calorimeter, ASTM E-1354, Annual Book of ASTM Standard, Volume 04.07, American Society for Testing and Materials (1990).

[191] Fitzgerald, R. W., Structural Integrity During Fire, Section 6, Chapter 5 in Fire Protection Handbook, Seventeenth Edition, Cote, A. E., Ed., Natl. Fire Protection Association, Quincy, MA (1991).

[192] Tustin, E. A., Development of Fire Test Methods for Airplane Interior Materials, Natl. Aeronautics and Space Administration, Report No. NASA CR-14568 (1978).

[193] Sarkos, C. P., Filipczak, R. A., and Abramowitz, A., Preliminary Evaluation of an improved Flammability Test Method for Aircraft Materials, U.S. Department of Transportation, Report No. DOT/FAA/CT-84/22 (1984).

[194] Peacock, R.D., Fire Safety Guidelines for Vehicles in a Downtown People Mover System, Natl. Bur. Stand. (U.S.), NBSIR 78-1586 (1979).

[195] Jenkins, C. E., BART Experience with New Seat Materials, *J. Consumer Product Flamm.*, Vol.9, No. 1, pp. 20-30 (1982).

[196] Hathaway, W. T., Markos, S. H., and Baker, J. B., Review of BART "C" Car Fire Safety Characteristics, U.S. Department of Transportation, Report No. UMTA-MA-06-0178-87-1 (1987).

[197] Babrauskas, V., and Wickström, U.G., The Rational Development of Bench-Scale Fire Tests for Full-Scale Fire Prediction, pp. 813-822 in Fire Safety Science — Proc. of the Second International Symposium (1988). Hemisphere Publishing, New York, NY (1989).

[198] Wickström, U., and Göransson, U., Prediction of Heat Release Rates of Large Scale Room Fire Tests Based on Cone Calorimeter Results, *J. Testing and Evaluation*, Vol. 15, 364-370 (1987).

[199] Göransson, U., and Wickström, U., Flame Spread Predictions in the Room/Corner Test Based on the Cone Calorimeter, pp. 211-219 in INTERFLAM '90: Fifth Intl. Fire Conf. Proc., Interscience Communications, Ltd., London (1990).

[200] Jianmin, Qian, Prediction of flame spread test results from the test data of the Cone Calorimeter (SP Report 1990:38). SP/Swedish National Testing and Research Institute, Borås, Sweden (1990).

[201] Babrauskas, V., Comparative Rates of Heat Release from Five Different Types of Test Apparatuses, *J. of Fire Sciences*, Vol. 4, 148-159 (1986).

[202] Fire tests — Reaction to fire — Ignitability of building products (ISO 5657), International Organization for Standardization, Geneva (1986).

[203] 1988 R&D•100 Award Winners, *Research & Development*, Vol. 30, 62-104 (October 1988).

[204] Babrauskas, V., Development of the Cone Calorimeter — A Bench Scale Heat Release Rate Apparatus Based on Oxygen Consumption, *Fire and Materials*, Vol. 8, 81-95 (1984).

[205] Babrauskas, V., and Parker, W.J., Ignitability Measurements with the Cone Calorimeter, *Fire and Materials*, Vol. 11, 31-43 (1987).

[206] Babrauskas, V., and Mulholland, G., Smoke and Soot Data Determinations in the Cone Calorimeter, pp. 83-104 in Mathematical Modeling of Fires (ASTM STP 983). American Society for Testing and Materials, Philadelphia (1987).

[207] Babrauskas, V., The Cone Calorimeter — Fire Properties, pp. 78-87 in New Technology to Reduce Fire Losses & Costs, S.J. Grayson and D.A. Smith, eds., Elsevier Applied Science Publishers, London (1986).

[208] International Standard — Fire Tests — Reaction to Fire — Rate of Heat Release from Building Products (ISO 5660). International Organization for Standardization, Geneva (1992).

[209] Standard Test Method for Heat and Visible Smoke Release Rates for Materials and Products using an Oxygen Consumption Calorimeter (E 1354). American Society for Testing and Materials, Philadelphia.

[210] Standard Method of Test for Flammability of Plastics using the Oxygen Index Method (ASTM D 2863). American Society for Testing and Materials, Philadelphia.

[211] Tests for Flammability of Plastic Materials for Parts in Devices and Appliances (UL 94). Underwriters Laboratories, Northbrook.

[212] Weil, E.D., Hirschler, M.M., Patel, N.G., Said, M.M., and Shakir, S., Oxygen Index: Correlations to Other Fire Tests, *Fire and Materials*, Vol. 16, 159-167 (1992).

[213] Babrauskas, V., Bench-Scale Methods for Prediction of Full-Scale Fire Behavior of Furnishings and Wall Linings, Technical Report 84-10, Society of Fire Protection Engineers, Boston (1984).

[214] Petrella, R.V., presentation to The Society of the Plastics Industry, Inc., Miami, FL (December 1992).

[215] Babrauskas, V., Specimen Heat Fluxes for Bench-scale Heat Release Rate Testing, paper presented at INTERFLAM '93, Oxford (April 1993).

[216] Wickström, U., and Göransson, U., Full-scale/Bench-scale Correlations of Wall and Ceiling Linings, *Fire and Materials*, Vol. 16, 15-22 (1992).

[217] Karlsson, B., A Mathematical Model for Calculating Heat Release Rate in the Room Corner Test, paper presented at ASTM International Symp. on Fire and Flammability of Furnishings and Contents (1992).

[218] Babrauskas, V., and Krasny, J.F., Fire Behavior of Upholstered Furniture, Natl. Bur. Stand. (U.S.), Monograph 173 (1985).

[219] Parker, W.J., Tu, K.M., Nurbakhsh, S., and Damant, G.H., Furniture Flammability: An Investigation of the California Technical Bulletin 133 Test. Part III: Full Scale Chair Burns, Natl. Bur. Stand. (U.S.), NISTIR 4375 (1990).

[220] Hirschler, M.M., Electric Cable Fire Hazard Assessment with the Cone Calorimeter, pp. 44-65 in Fire Hazard and Fire Risk Assessment (ASTM STP 1150). American Society for Testing and Materials, Philadelphia (1992).

[221] Richardson, L.R., and Brooks, M.E., Combustibility of Building Materials, *Fire and Materials*, Vol. 15, 131-136 (1991).

[222] Richardson, L.R., Determining Degrees of Combustibility of Building Materials — National Building Code of Canada, pp. 1-12 in Proc. First Intl. Fire and Materials Conf., Interscience Communications Ltd, London (1992).

[223] Babrauskas, V., and Grayson, S.J., eds., Heat Release in Fires, Elsevier Applied Science Publishers, London (1992).

[224] Ames, S. A. and Rogers, S. P., Large and Small Scale Fire Calorimetry Assessment of Upholstered Furniture, in INTERFLAM '90, proceeding of the Fifth Intl. Fire Conf., pp 221-232, Interscience Communications, Ltd. London (1990).

[225] Parker, W.J., Tu, K.-M., Nurbakhsh, S., and Damant, G.H., Furniture Flammability: An Investigation of the California Technical Bulletin 133 Test. Part III: Full Scale Chair Burns (NISTIR 4375). [U.S.] Natl. Bur. Stand. (1990).

[226] Flammability Test Procedure for Seating Furniture Used in Public Occupancies (Technical Bulletin 133), State of California, Department of Consumer Affairs, Bureau of Home Furnishings and Thermal Insulation, North Highlands, CA (January 1991).

[227] Ohlemiller, T. and Villa, K., Furniture Flammability: An Investigation of the California Technical Bulletin 133 Test - Part 2: Characterization of Ignition Source and Comparable Gas Burner, Natl. Bur. Stand. (U.S.), NISTIR 4348 (1990).

[228] Wickström, U. and Göransson, U., Prediction of Heat Release Rates of Surface Materials in Large-Scale Fire Tests Based on Cone Calorimeter Results, *J. Testing and Evaluation*, Vol. 15, pp. 364-370 (1987).

[229] Göransson, U. and Wickström, U., Flame Spread Predictions in the Room/Corner Test Based on the Cone Calorimeter, in Interflam '90, Proceedings of the Fifth International Fire Conference, Interscience Communications, Ltd., London, pp. 211-219 (1990).

[230] Östman, B. A., and Nussbaum, R. M., Correlation Between Small-scale Rate of Heat Release and Full-scale Room Flashover for Surface Linings, in Fire Safety Science – Proceedings of the Second International Symposium, 1988, Hemisphere Publishing, New York, pp. 823-832 (1989).

[231] Sundström, B., Room Fire Test in Full Scale for Surface Products (Rapport SP-RAPP 1984:16). Statens Provningsanstalt, Borås, Sweden (1984).

[232] Surface Products: Room Fire Tests in Full Scale (Nordtest Method NT FIRE 025). NORDTEST, Helsingfors, Finland (1986).

[233] Göransson, U., Nordtest Full-scale Fire Tests, Proceedings of the Flame Retardants '90 Conference, London, UK, pp 34-42 (January 1990).

[234] Sundström, B. and Göransson, U., Possible Fire Classification Criteria and Their Implications for Surface Materials Tested in Full Scale According to ISO DP 9705 or NORDTEST Fire 025, SP-Report 1988:19, Statens Provningsanstalt, Borås, Sweden (1988).

[235] Wickström, U. and Goranssön, U., Correlations of Wall and Ceiling Linings, Chapter 13 in Heat Release in Fires, Babrauskas, V. and Grayson, S. J., Eds., Elsevier Applied Science, New York (1992).

[236] Ohlemiller, T., Cleary, T., Brown, J., and Shields, J., Assessing the Flammability of Compasite Materials, *J. Fire Sci.*, Vol. 11, No. 4, pp. 308-319 (1993).

[237] Rosato, D. V., An Overview of Composites, Handbook of Composites, Lubin, G., Editor, p.1, Van Nostrand Reinhold, N.Y. (1982).

[238] Encyclopedia of Composites Materials and Components, Grayson, M., Editor, John Wiley & Sons, New York, NY (1983).

[239] Engineered Materials Handbook, Vol. 1, Composites, Prepared under the direction of the ASM International Handbook Committee, Metals Park, OH (1987)

[240] Brown, J.E., Loftus, J.J., and Dipert, R.A., Fire Characteristics of Composite Materials — A Review of the Literature, Natl. Bur. Stand. (U.S.), NBSIR 85-3226 (1986).

[241] Ohlemiller, T., Assessing the Flammability of Composite Materials, Natl. Inst. Stand. Technol., NISTIR 88-4032 (1989).

[242] Ohlemiller, T., and Dolan, S., Ignition and Lateral Flame Spread Characteristics of Certain Composite Materials, Natl. Inst. Stand. Technol., NISTIR 88-4030 (1989).

[243] Brown, J. E., Braun, E., and Twilley, W. H., Cone Calorimeter Evaluation of the Flammability of Composite Materials, Natl. Bur. Stand. (U.S.), NBSIR 88-3733 (1988).

[244] Brown, J.E., Cone Calorimeter Method for Determining the Flammability of Composite Materials, pp. 141-150 in How to Apply Advanced Composites Technology (Proc. of the Fourth Annual Conf. on Advanced Composites). ASM International, Dearborn, MI (1988).

[245] Green A. R., Wind-aided Spread Over Horizontal Surfaces, Chapter 9(b) in Heat Release in Fires, Babrauskas, V. and Grayson, S. J., Eds., Elsevier Applied Science, New York (1992).

[246] Parker, W. J., Prediction of the Heat Release Rate from Basic Measurements, and Tran, H. C. Experimental Data on Wood Materials, Chapter 11 in Heat Release in Fires, Babrauskas, V. and Grayson, S. J., Eds., Elsevier Applied Science, New York (1992).

[247] Kanury, A.M. and Martin, B.M., A Profile of the Heat-Release Rate Calorimeter, International Symposium on Fire Safety of Combustible Materials, University of Edinburgh, UK (1975).

[248] Kanury, A.M., Modeling of Pool Fires with a Variety of Polymers, Fifteenth Symposium (International) on Combustion, The Combustion Institute, Pittsburgh, PA (1975).

[249] Standard on the Installation, Maintenance, and Use of Protective Signaling Systems, 1990 Edition, ANSI/NFPA 72, National Fire Protection Association, Quincy, MA 02269, 1990.

[250] Smoke Alarm System for Passenger Cars, AMTRAK Specification 307, National Railroad Passenger Corp., Philadelphia, PA 19104.

[251] Test for Flame Spread on Interior Finish Materials, ASTM E-84, Annual Book of ASTM Standards, Volume 04.07, American Society for Testing and Materials (1988).

[252] Hall Jr., J.R., and Stiefel, S.W., Decision Analysis Model for Passenger-Aircraft Fire Safety with Application to Fire-Blocking of Seats, Natl. Bur. Stand. (U.S.), NBSIR 84-2817 (1984).

[253] Bukowski, R.W., Toxic Hazard Analysis of Plenum Cables, *Fire Technology*, Vol. 21, No. 4, pp 252-266, (1985).

[254] Babrauskas, V., Harris, R. H., Gann, R. G., Levin, B. C., Lee, B. T., Peacock, R. D., Paabo, M., Twilley, W., Yoklavich, M. F., and Clark, H. M., Fire Hazard Comparison of Fire-Retarded and Non-Fire-Retarded Products, Natl. Inst. Stand. Technol., Spec. Publ. 749 (1988).

[255] Friedman, R., "Survey of Computer Models for Fire and Smoke, Factory Mutual Research Corp., Norwood, MA, 02062 1990.

[256] Cooper, L.Y., A Mathematical Model for Estimating Available Safe Egress Time in Fires, *Fire and Materials.* Vol. 6, No. 4, 135-144 (1982).

[257] Babrauskas, V., COMPF2-A Program for Calculating Post-Flashover Fire Temperatures, Natl. Bur. Stand. (U.S.) Tech. Note 991, 76 p (1979).

[258] Davis, W. D. and Cooper, L. Y., Computer Model for Estimating the Response of Sprinkler Links to Compartment Fires With Draft Curtains and Fusible Link-Actuated Ceiling Vents, *Fire Technology* Vol. 27, No. 2, 113-127 (1991).

[259] Mitler, H.E. and Emmons, H.W., Documentation for CFCV, the Fifth Harvard Computer Fire Code, Nat. Bur. Stand. (U.S.) NBSGCR 81-344, 187 p (1981).

[260] Mitler, H. E. and Rockett, J., A User's Guide for FIRST, a Comprehensive Single Room Fire Model, Natl. Bur. Stand. (U.S.) NBSIR 87-3595 (1987).

[261] Tanaka, T., A Model of Multiroom Fire Spread, Natl. Bur. Stand. (U.S.) NBSIR 83-2718, 175 p (1983).

[262] Gahm, J. B., Computer Fire Code VI, Volume I, Nat. Bur. Stand. (U.S.) NBS GCR 83-451, 116 p (1983).

[263] Jones, W. W., A Multicompartment Model for the Spread of Fire, Smoke and Toxic Gases, *Fire Safety J*, Vol. 9, No. 55 (1985); Jones, W. W. and Peacock, R. D., Refinement and Experimental Verification of a Model for Fire Growth and Smoke Transport, Proceedings of the 2nd International Symposium on Fire Safety Science, Tokyo (1989); Jones, W.

W. and Peacock, R. D., Technical Reference Guide for FAST Version 18, Natl. Inst. Stand. Techol. Tech. Note 1262 (1989).

[264] Forney, G. P. and Cooper, L. Y., The Consolidated Compartment Fire Model (CCFM) Computer Application CCFM.VENTS - Part II: Software Reference Guide, Nat. Inst. Stand. Technol., NISTIR 90-4343 (1990).

[265] Jones, W. W. and Forney, G. P. A Programmer's Reference Manual for CFAST, the Unified Model of Fire Growth and Smoke Transport, Natl. Inst. Stand. Technol. Tech. Note 1283, 104 p (1990).

[266] Hathaway, W. T., Survey of Fire Modeling Efforts with Application to Transportation Vehicles, Department of Transportation, Transportation Systems Center, Report No. DOT-TSC-OST-81-4 (1981).

[267] Mitler, H. E. Comparison of Several Compartment Fire Models: An Interim Report, Natl. Bur. Stand. (U.S.), NBSIR 85-3233, 33 p (1985).

[268] Jones, W. W. A Review of Compartment Fire Models, Natl. Bur. Stand. (U.S.), NBSIR 83-2684, 41 p (1983).

[269] Bukowski, R. W., Peacock, R. D., Jones, W. W., and Forney, C. L., Fire Hazard Assessment Method, Natl. Inst. Stand. Technol. Handbook 146, (1989).

[270] National Fire Protection Association, NFPA 101, Code for Safety yo Life from Fire in Buildings and Structures, 1991 edition, NFPA, Quincy, MA (1991).

[271] Cappuccio, J. A., Development of Analytical Techniques for Risk Management Training. Master's Thesis, Worcester Polytechnic Institute (1992).

[272] Barnett, J. R., Development of Analytical Techniques for Risk Management Training, U.S. Department of Transportation, Federal Transit Administration, Report DOT-MA-22-0050-92-1 (1992).

[273] Burdett, J. R. F, Ames, S. A., and Fardell, P. J., Selection of Materials and Composites to Minimize Fire Hazard, in The King's Cross Underground Fire: Fire Dynamics and the Organization of Safety, The Institution of Mechanical Engineers, London (1989).

☆ U.S. GOVERNMENT PRINTING OFFICE: 1994 — 3 0 0 -5 6 8 / 8 3 1 3 0

NIST Technical Publications

Periodical

Journal of Research of the National Institute of Standards and Technology—Reports NIST research and development in those disciplines of the physical and engineering sciences in which the Institute is active. These include physics, chemistry, engineering, mathematics, and computer sciences. Papers cover a broad range of subjects, with major emphasis on measurement methodology and the basic technology underlying standardization. Also included from time to time are survey articles on topics closely related to the Institute's technical and scientific programs. Issued six times a year.

Nonperiodicals

Monographs—Major contributions to the technical literature on various subjects related to the Institute's scientific and technical activities.

Handbooks—Recommended codes of engineering and industrial practice (including safety codes) developed in cooperation with interested industries, professional organizations, and regulatory bodies.

Special Publications—Include proceedings of conferences sponsored by NIST, NIST annual reports, and other special publications appropriate to this grouping such as wall charts, pocket cards, and bibliographies.

Applied Mathematics Series—Mathematical tables, manuals, and studies of special interest to physicists, engineers, chemists, biologists, mathematicians, computer programmers, and others engaged in scientific and technical work.

National Standard Reference Data Series—Provides quantitative data on the physical and chemical properties of materials, compiled from the world's literature and critically evaluated. Developed under a worldwide program coordinated by NIST under the authority of the National Standard Data Act (Public Law 90-396). NOTE: The Journal of Physical and Chemical Reference Data (JPCRD) is published bimonthly for NIST by the American Chemical Society (ACS) and the American Institute of Physics (AIP). Subscriptions, reprints, and supplements are available from ACS, 1155 Sixteenth St., NW, Washington, DC 20056.

Building Science Series—Disseminates technical information developed at the Institute on building materials, components, systems, and whole structures. The series presents research results, test methods, and performance criteria related to the structural and environmental functions and the durability and safety characteristics of building elements and systems.

Technical Notes—Studies or reports which are complete in themselves but restrictive in their treatment of a subject. Analogous to monographs but not so comprehensive in scope or definitive in treatment of the subject area. Often serve as a vehicle for final reports of work performed at NIST under the sponsorship of other government agencies.

Voluntary Product Standards—Developed under procedures published by the Department of Commerce in Part 10, Title 15, of the Code of Federal Regulations. The standards establish nationally recognized requirements for products, and provide all concerned interests with a basis for common understanding of the characteristics of the products. NIST administers this program in support of the efforts of private-sector standardizing organizations.

Consumer Information Series—Practical information, based on NIST research and experience, covering areas of interest to the consumer. Easily understandable language and illustrations provide useful background knowledge for shopping in today's technological marketplace.

Order the **above** *NIST publications from: Superintendent of Documents, Government Printing Office, Washington, DC 20402.*

Order the **following** *NIST publications—FIPS and NISTIRs—from the National Technical Information Service, Springfield, VA 22161.*

Federal Information Processing Standards Publications (FIPS PUB)—Publications in this series collectively constitute the Federal Information Processing Standards Register. The Register serves as the official source of information in the Federal Government regarding standards issued by NIST pursuant to the Federal Property and Administrative Services Act of 1949 as amended, Public Law 89-306 (79 Stat. 1127), and as implemented by Executive Order 11717 (38 FR 12315, dated May 11, 1973) and Part 6 of Title 15 CFR (Code of Federal Regulations).

NIST Interagency Reports (NISTIR)—A special series of interim or final reports on work performed by NIST for outside sponsors (both government and non-government). In general, initial distribution is handled by the sponsor; public distribution is by the National Technical Information Service, Springfield, VA 22161, in paper copy or microfiche form.