AUTHENTICATED
U.S. GOVERNMENT
INFORMATION
GPO

FEDERAL REGISTER

Vol. 88 Thursday,
No. 81 April 27 2023

Pages 25479–26218

OFFICE OF THE FEDERAL REGISTER

The **FEDERAL REGISTER** (ISSN 0097–6326) is published daily, Monday through Friday, except official holidays, by the Office of the Federal Register, National Archives and Records Administration, under the Federal Register Act (44 U.S.C. Ch. 15) and the regulations of the Administrative Committee of the Federal Register (1 CFR Ch. I). The Superintendent of Documents, U.S. Government Publishing Office, is the exclusive distributor of the official edition. Periodicals postage is paid at Washington, DC.

The **FEDERAL REGISTER** provides a uniform system for making available to the public regulations and legal notices issued by Federal agencies. These include Presidential proclamations and Executive Orders, Federal agency documents having general applicability and legal effect, documents required to be published by act of Congress, and other Federal agency documents of public interest.

Documents are on file for public inspection in the Office of the Federal Register the day before they are published, unless the issuing agency requests earlier filing. For a list of documents currently on file for public inspection, see *www.federalregister.gov.*

The seal of the National Archives and Records Administration authenticates the Federal Register as the official serial publication established under the Federal Register Act. Under 44 U.S.C. 1507, the contents of the **Federal Register** shall be judicially noticed.

The **Federal Register** is published in paper and on 24x microfiche. It is also available online at no charge at *www.govinfo.gov*, a service of the U.S. Government Publishing Office.

The online edition of the **Federal Register** is issued under the authority of the Administrative Committee of the Federal Register as the official legal equivalent of the paper and microfiche editions (44 U.S.C. 4101 and 1 CFR 5.10). It is updated by 6:00 a.m. each day the **Federal Register** is published and includes both text and graphics from Volume 1, 1 (March 14, 1936) forward. For more information, contact the GPO Customer Contact Center, U.S. Government Publishing Office. Phone 202-512-1800 or 866-512-1800 (toll free). E-mail, *gpocusthelp.com.*

The annual subscription price for the **Federal Register** paper edition is $860 plus postage, or $929, for a combined **Federal Register, Federal Register** Index and List of CFR Sections Affected (LSA) subscription; the microfiche edition of the **Federal Register** including the **Federal Register** Index and LSA is $330, plus postage. Six month subscriptions are available for one-half the annual rate. The prevailing postal rates will be applied to orders according to the delivery method requested. The price of a single copy of the daily **Federal Register,** including postage, is based on the number of pages: $11 for an issue containing less than 200 pages; $22 for an issue containing 200 to 400 pages; and $33 for an issue containing more than 400 pages. Single issues of the microfiche edition may be purchased for $3 per copy, including postage. Remit check or money order, made payable to the Superintendent of Documents, or charge to your GPO Deposit Account, VISA, MasterCard, American Express, or Discover. Mail to: U.S. Government Publishing Office—New Orders, P.O. Box 979050, St. Louis, MO 63197-9000; or call toll free 1-866-512-1800, DC area 202-512-1800; or go to the U.S. Government Online Bookstore site, see *bookstore.gpo.gov.*

There are no restrictions on the republication of material appearing in the **Federal Register.**

How To Cite This Publication: Use the volume number and the page number. Example: 88 FR 12345.

Postmaster: Send address changes to the Superintendent of Documents, Federal Register, U.S. Government Publishing Office, Washington, DC 20402, along with the entire mailing label from the last issue received.

SUBSCRIPTIONS AND COPIES

PUBLIC

Subscriptions:

Paper or fiche	**202–512–1800**
Assistance with public subscriptions	**202–512–1806**

General online information **202–512–1530; 1–888–293–6498**

Single copies/back copies:

Paper or fiche	**202–512–1800**
Assistance with public single copies	**1–866–512–1800 (Toll-Free)**

FEDERAL AGENCIES

Subscriptions:

Assistance with Federal agency subscriptions:

Email	*FRSubscriptions@nara.gov*
Phone	**202–741–6000**

The Federal Register Printing Savings Act of 2017 (Pub. L. 115-120) placed restrictions on distribution of official printed copies of the daily **Federal Register** to members of Congress and Federal offices. Under this Act, the Director of the Government Publishing Office may not provide printed copies of the daily **Federal Register** unless a Member or other Federal office requests a specific issue or a subscription to the print edition. For more information on how to subscribe use the following website link: *https://www.gpo.gov/frsubs.*

Printed on recycled paper.

Contents

Federal Register

Vol. 88, No. 81

Thursday, April 27, 2023

Agricultural Marketing Service
PROPOSED RULES
Marketing Order Regulations for Almonds Grown in California, 25565–25571
Marketing Order:
Almonds Grown in California; Amendments, 25559–25565
Pears Grown in Oregon and Washington; Continuance Referendum, 25559

Agriculture Department
See Agricultural Marketing Service
See National Agricultural Statistics Service
See Natural Resources Conservation Service
NOTICES
Agency Information Collection Activities; Proposals, Submissions, and Approvals, 25617–25618

Bureau of Consumer Financial Protection
NOTICES
Agency Information Collection Activities; Proposals, Submissions, and Approvals, 25624–25625

Centers for Disease Control and Prevention
NOTICES
Agency Information Collection Activities; Proposals, Submissions, and Approvals, 25640–25642
Hazardous Drugs:
Procedures for Developing the List of Hazardous Drugs in Healthcare Settings and Managing Hazardous Drug Exposures: Information for Healthcare Settings, 25642–25657

Children and Families Administration
NOTICES
Single-Source Cooperative Agreements:
Unfunded Diaper Distribution Pilot Applications from Fiscal Year 2022, 25657–25658

Coast Guard
RULES
Safety Zone:
Cumberland River, 25496–25498
Fairport Harbor, Fairport, OH, 25494–25496
Special Local Regulation:
Safety Zone, Monongahela River Mile Marker 89.8 to Mile Marker 90.8, Point Marion, PA, 25493–25494
PROPOSED RULES
Drawbridge Operations:
Maumee River, Toledo, OH, 25572–25574

Commerce Department
See International Trade Administration
See National Oceanic and Atmospheric Administration
See Patent and Trademark Office

Comptroller of the Currency
RULES
Interagency Policy Statement on Allowances for Credit Losses, 25479–25488

Corporation for National and Community Service
NOTICES
Agency Information Collection Activities; Proposals, Submissions, and Approvals:
Application Package for AmeriCorps Seniors Applications Instructions, Progress Reporting, Independent Living and Respite Surveys, 25625

Defense Acquisition Regulations System
RULES
Defense Federal Acquisition Regulation Supplement:
Technical Amendments, 25511–25512
PROPOSED RULES
Defense Federal Acquisition Regulation Supplement:
Consolidation of DoD Government Property Clauses, 25600–25606
Restriction on Certain Metal Products, 25609–25612
Transfer and Adoption of Military Animals, 25606–25609

Defense Department
See Defense Acquisition Regulations System
RULES
TRICARE; Reimbursement of Ambulatory Surgery Centers and Outpatient Services Provided in Cancer and Children's Hospitals, 25492
NOTICES
Agency Information Collection Activities; Proposals, Submissions, and Approvals, 25626–25627
Meetings:
Board of Visitors, National Defense University, 25625–25626

Drug Enforcement Administration
NOTICES
Importer, Manufacturer or Bulk Manufacturer of Controlled Substances; Application, Registration, etc.:
AndersonBrecon, Inc., 25704–25705
Pfizer, Inc., 25705
Pisgah Laboratories, Inc., 25703–25704
Research Triangle Institute, 25699–25703
Royal Dynastic Organics, 25698–25699

Education Department
NOTICES
Agency Information Collection Activities; Proposals, Submissions, and Approvals:
National Professional Development Program: Grantee Performance Report, 25627

Energy Department
See Federal Energy Regulatory Commission
NOTICES
Meetings:
Environmental Management Advisory Board, 25627–25628
National Quantum Initiative Advisory Committee, 25628

Environmental Protection Agency
RULES
Air Quality State Implementation Plans; Approvals and Promulgations:
Michigan; Revisions to Part 1 and 2 Rules, 25498–25501

Pesticide Tolerances:
Fluazifop-P-butyl, 25501–25508
PROPOSED RULES
Greenhouse Gas Emissions Standards for Heavy-Duty Vehicles—Phase 3, 25926–26161
National Emission Standards for Hazardous Air Pollutants:
Ethylene Production, Miscellaneous Organic Chemical Manufacturing, Organic Liquids Distribution (Non-Gasoline), and Petroleum Refineries Reconsideration, 25574–25590
Toxic Substances Control Act:
Polyvinyl Alcohol; Petition for Rulemaking; Denial, 25590–25600
NOTICES
Agency Information Collection Activities; Proposals, Submissions, and Approvals:
Application Materials for the Water Infrastructure Finance and Innovation Act, 25637–25638
Beaches Environmental Assessment and Coastal Health Act Grant Program, 25635–25636
National Refrigerant Recycling and Emissions Reduction Program, 25638–25639
State Review Framework, 25636
Meetings:
California State Nonroad Engine Pollution Control Standards; Commercial Harbor Craft, 25636–25637

Export-Import Bank
NOTICES
Applications for Long-Term Loans or Financial Guarantees in Excess of $100 Million, 25639

Federal Deposit Insurance Corporation
RULES
Interagency Policy Statement on Allowances for Credit Losses, 25479–25488

Federal Election Commission
NOTICES
Meetings; Sunshine Act, 25639–25640

Federal Energy Regulatory Commission
NOTICES
Agency Information Collection Activities; Proposals, Submissions, and Approvals, 25630–25631
Combined Filings, 25632–25634
Filing:
City of Vernon, CA, 25632
Initial Market-Based Rate Filings Including Requests for Blanket Section 204 Authorizations:
Estrella Solar, LLC, 25632
Raceway Solar 1, LLC, 25631
Request under Blanket Authorization:
Southern Star Central Gas Pipeline, Inc., 25628–25630
Waiver Period for Water Quality Certification Application:
Green Mountain Power Corp., 25631–25632

Federal Railroad Administration
NOTICES
Regulations Governing Certain Positive Train Control System Outages, 25726–25727

Federal Reserve System
RULES
Interagency Policy Statement on Allowances for Credit Losses, 25479–25488
NOTICES
Formations of, Acquisitions by, and Mergers of Bank Holding Companies, 25640

Fish and Wildlife Service
RULES
Endangered and Threatened Species:
Big Creek Crayfish and St. Francis River Crayfish, 25512–25542
South Llano Springs Moss, 25543–25557
PROPOSED RULES
Endangered and Threatened Species:
Bi-State Distinct Population Segment of Greater Sage-Grouse, 25613–25616
NOTICES
Endangered and Threatened Species:
Recovery Permit Applications, 25673–25682
Permits; Applications, Issuances, etc.:
Incidental Take Permit Application and Proposed Habitat Conservation Plan for the Sand Skink; Orange County, FL; Categorical Exclusion, 25672–25673
Proposed Habitat Conservation Plan for the Sand Skink; Lake County, FL; Categorical Exclusion, 25680–25681

Food and Drug Administration
NOTICES
Agency Information Collection Activities; Proposals, Submissions, and Approvals:
Reporting Associated With Animal Drug and Animal Generic Drug User Fees, 25658–25660
The Real Cost Monthly Implementation Assessment, 25660–25663
Meetings:
Good Manufacturing Practices for Cosmetic Products Listening Session, 25663–25665

Foreign Assets Control Office
RULES
Iranian Transactions and Sanctions Regulations and Western Balkans Stabilization Regulations; Correction, 25491–25492
NOTICES
Sanctions Action, 25736–25737

General Services Administration
RULES
Federal Management Regulation:
Replacement of Personal Property Pursuant to the Exchange/Sale Authority, 25508–25511

Health and Human Services Department
See Centers for Disease Control and Prevention
See Children and Families Administration
See Food and Drug Administration
See National Institutes of Health
RULES
Patient Protection and Affordable Care Act:
Notice of Benefit and Payment Parameters, 25740–25923
NOTICES
Agency Information Collection Activities; Proposals, Submissions, and Approvals, 25665–25666

Homeland Security Department
See Coast Guard
See U.S. Customs and Border Protection
NOTICES
Agency Information Collection Activities; Proposals, Submissions, and Approvals:
Secure Software Development Attestation Common Form, 25670–25672

Interior Department
See Fish and Wildlife Service

See Land Management Bureau
See National Park Service

International Trade Administration
NOTICES
Approved International Trade Administration Trade Mission, 25620–25623

International Trade Commission
NOTICES
Meetings; Sunshine Act, 25698

Judicial Conference of the United States
NOTICES
Meetings:
Committee on Rules of Practice and Procedure, 25698

Justice Department
See Drug Enforcement Administration
NOTICES
Agency Information Collection Activities; Proposals, Submissions, and Approvals:
Application for Explosives License or Permit, 25705–25706
Proposed Consent Decree:
Clean Air Act, 25705–25707

Labor Department
See Mine Safety and Health Administration
See Occupational Safety and Health Administration

Land Management Bureau
NOTICES
Agency Information Collection Activities; Proposals, Submissions, and Approvals:
Mineral Materials Disposal, 25685–25686
Tramroads and Logging Roads, 25683–25684
Environmental Impact Statements; Availability, etc.:
Hiawatha Regional Energy Development Project, Wyoming; Termination, 25684
Meetings:
Bears Ears National Monument Advisory Committee, Utah, 25684–25685
Public Land Order:
No. 7921; Withdrawal of Public Land for Satellite Calibration in Railroad Valley; Nye County, NV, 25682–25683

Management and Budget Office
NOTICES
Request for Information:
National Biotechnology and Biomanufacturing Initiative; Measuring the Bioeconomy, 25711–25715

Maritime Administration
NOTICES
Coastwise-Qualified Launch Barges, 25727–25728

Mine Safety and Health Administration
NOTICES
Petition:
Modification of Application of Existing Mandatory Safety Standards, 25707–25710

National Aeronautics and Space Administration
NOTICES
Meetings:
Advisory Council; Technology, Innovation and Engineering Committee, 25715

National Agricultural Statistics Service
NOTICES
Agency Information Collection Activities; Proposals, Submissions, and Approvals, 25618–25619

National Credit Union Administration
RULES
Interagency Policy Statement on Allowances for Credit Losses, 25479–25488

National Institutes of Health
NOTICES
Meetings:
Eunice Kennedy Shriver National Institute of Child Health and Human Development, 25667
National Institute of Neurological Disorders and Stroke, 25667
National Institute of Nursing Research, 25667–25668

National Oceanic and Atmospheric Administration
RULES
Fisheries of the Northeastern United States:
Atlantic Herring Fishery; 2023 River Herring and Shad Catch Cap Reached for Midwater Trawl Vessels in the Cape Cod Catch Cap Area, 25557–25558

National Park Service
NOTICES
Inventory Completion:
Rochester Museum and Science Center, Rochester, NY, 25686–25697

Natural Resources Conservation Service
NOTICES
National Handbook of Conservation Practices for the Natural Resources Conservation Service; Proposed Revisions, 25619–25620

Occupational Safety and Health Administration
NOTICES
Meetings:
National Advisory Committee on Occupational Safety and Health, 25710–25711

Patent and Trademark Office
NOTICES
Meetings:
Trademark Public Advisory Committee Public Hearing on the Proposed Trademark Fee Schedule, 25623–25624

Postal Regulatory Commission
NOTICES
New Postal Products, 25715–25716

Postal Service
NOTICES
Product Change:
Priority Mail Express, Priority Mail, First-Class Package Service, and Parcel Select Service Negotiated Service Agreement, 25716
Priority Mail Negotiated Service Agreement, 25716

Railroad Retirement Board
NOTICES
Meetings:
Actuarial Advisory Committee with Respect to the Railroad Retirement Account, 25716

Securities and Exchange Commission
NOTICES
Agency Information Collection Activities; Proposals, Submissions, and Approvals, 25717
Self-Regulatory Organizations; Proposed Rule Changes:
Fixed Income Clearing Corp., 25721–25725
ICE Clear Credit, LLC, 25717–25718
Long-Term Stock Exchange, Inc., 25718–25721

Small Business Administration
RULES
Ownership and Control and Contractual Assistance Requirements for the 8(a) Business Development Program, 26164–26217

State Department
RULES
International Traffic in Arms Regulations:
U.S. Munitions List Targeted Revisions, 25488–25491
NOTICES
Culturally Significant Objects Being Imported for Exhibition:
Edvard Munch: Trembling Earth, 25725

Tennessee Valley Authority
NOTICES
Agency Information Collection Activities; Proposals, Submissions, and Approvals, 25725–25726

Transportation Department
See Federal Railroad Administration
See Maritime Administration
NOTICES
Funding Opportunity:
Regional Infrastructure Accelerator Demonstration Program, 25728–25736

Treasury Department
See Comptroller of the Currency
See Foreign Assets Control Office

U.S. Customs and Border Protection
NOTICES
Agency Information Collection Activities; Proposals, Submissions, and Approvals:
Death Gratuity Information Sheet, 25669–25670
Declaration of Owner and Declaration of Consignee when Entry is made by an Agent, 25670
Deferral of Duty on Large Yachts Imported for Sale, 25668–25669

Separate Parts In This Issue

Part II
Health and Human Services Department, 25740–25923

Part III
Environmental Protection Agency, 25926–26161

Part IV
Small Business Administration, 26164–26217

Reader Aids

Consult the Reader Aids section at the end of this issue for phone numbers, online resources, finding aids, and notice of recently enacted public laws.

To subscribe to the Federal Register Table of Contents electronic mailing list, go to https://public.govdelivery.com/accounts/USGPOOFR/subscriber/new, enter your e-mail address, then follow the instructions to join, leave, or manage your subscription.

CFR PARTS AFFECTED IN THIS ISSUE

A cumulative list of the parts affected this month can be found in the Reader Aids section at the end of this issue.

7 CFR

Proposed Rules:

927 25559
981 (2 documents) 25559, 25565

12 CFR

30 25479
208 25479
364 25479
741 25479

13 CFR

121 26164
124 26164
125 26164
126 26164
127 26164
128 26164

22 CFR

121 25488

31 CFR

560 25491
588 25491

32 CFR

199 25492

33 CFR

100 25493
165 (2 documents) 25494, 25496

Proposed Rules:

117 25572

40 CFR

52 25498
180 25501

Proposed Rules:

Ch.1 25590
63 25574
1036 25926
1037 25926
1054 25926
1065 25926
1074 25926

41 CFR

102–39 25508

45 CFR

153 25740
155 25740
156 25740

48 CFR

212 25511
228 25511

Proposed Rules:

211 25600
212 (2 documents) 25600, 25606
225 25609
237 25606
245 25600
252 (3 documents) 25600, 25606, 25609

50 CFR

17 (2 documents) 25512, 25543
648 25557

Proposed Rules:

17 25613

Rules and Regulations

Federal Register

Vol. 88, No. 81

Thursday, April 27, 2023

This section of the FEDERAL REGISTER contains regulatory documents having general applicability and legal effect, most of which are keyed to and codified in the Code of Federal Regulations, which is published under 50 titles pursuant to 44 U.S.C. 1510.

The Code of Federal Regulations is sold by the Superintendent of Documents.

DEPARTMENT OF THE TREASURY

Office of the Comptroller of the Currency

12 CFR Part 30

FEDERAL RESERVE SYSTEM

12 CFR Part 208

[Docket No. OP–1680]

FEDERAL DEPOSIT INSURANCE CORPORATION

12 CFR Part 364

RIN 3064–ZA10

NATIONAL CREDIT UNION ADMINISTRATION

12 CFR Part 741

RIN 3133–AF05

Interagency Policy Statement on Allowances for Credit Losses (Revised April 2023)

AGENCY: Office of the Comptroller of the Currency (OCC), Treasury; Board of Governors of the Federal Reserve System (Board); Federal Deposit Insurance Corporation (FDIC); and National Credit Union Administration (NCUA).

ACTION: Final interagency policy statement.

SUMMARY: The Office of the Comptroller of the Currency, the Board of Governors of the Federal Reserve System, the Federal Deposit Insurance Corporation, and the National Credit Union Administration (collectively, the agencies) are issuing a revised interagency policy statement on allowances for credit losses (ACLs) (revised statement). The agencies are issuing the revised statement in response to changes to U.S. generally accepted accounting principles (GAAP) as promulgated by the Financial Accounting Standards Board (FASB) in Accounting Standards Update (ASU) 2022–02, *Financial Instruments—Credit Losses (Topic 326): Troubled Debt Restructurings and Vintage Disclosures* issued in March 2022.

DATES: The interagency policy statement is available on April 27, 2023.

FOR FURTHER INFORMATION CONTACT:

OCC: Amanda Freedle, Deputy Comptroller and Chief Accountant, (202) 649–6317; or Ashley Rangel, Deputy Chief Accountant, (202) 649–5648, Office of the Chief Accountant; or Kevin Korzeniewski, Counsel, Chief Counsel's Office, (202) 649–5490. If you are deaf, hard of hearing, or have a speech disability, please dial 7–1–1 to access telecommunications relay services.

Board: Lara Lylozian, Deputy Associate Director and Chief Accountant, (202) 475–6656; or Kevin Chiu, Senior Accounting Policy Analyst, (202) 912–4608, Division of Supervision and Regulation; or David Imhoff, Attorney, (202) 452–2249, Legal Division, Board of Governors of the Federal Reserve System, 20th and C Streets NW, Washington, DC 20551. For users of telephone systems via text telephone (TTY) or any TTY-based Telecommunications Relay Services (TRS), please call 711 from any telephone, anywhere in the United States.

FDIC: Shannon Beattie, Chief Accountant, (202) 898–3952; or Bryan Jonasson, Deputy Chief Accountant, (781) 794–5641; or Andrew Overton, Assistant Chief Accountant, (202)-898–8922; Division of Risk Management Supervision; or Catherine Wood, Counsel, (202) 898–3788, Legal Division, Federal Deposit Insurance Corporation, 550 17th Street NW, Washington, DC 20429.

NCUA: Technical information: Chris McGrath, Acting Chief Accountant, Office of Examination and Insurance, (703) 518–6611 or *Legal information:* Marvin Shaw, Staff Attorney, Office of General Counsel, (703) 548–2778. National Credit Union Administration, 1775 Duke Street, Alexandria, VA 22314.

SUPPLEMENTARY INFORMATION:

I. Background

On June 1, 2020, the agencies published in the **Federal Register** an interagency policy statement [1] (original statement) in response to changes to GAAP as promulgated by the FASB in ASU 2016–13, *Financial Instruments—Credit Losses (Topic 326): Measurement of Credit Losses on Financial Instruments* and subsequent amendments issued between June 2016 and the date of issuance of the original statement (collectively, Topic 326).

In March 2022, the FASB further amended Topic 326 with the issuance of ASU 2022–02, *Financial Instruments—Credit Losses (Topic 326): Troubled Debt Restructurings and Vintage Disclosures* (ASU 2022–02). ASU 2022–02 eliminates the recognition and measurement accounting guidance for Troubled Debt Restructurings (TDRs) by creditors upon adoption of Topic 326.

II. Current Actions

To maintain conformance with GAAP following the issuance of ASU 2022–02, the agencies are revising the original statement to remove references to TDRs. The agencies are also correcting a citation to a regulation in footnote 4 of the original statement. No other changes are being made to the original statement. Through this notice, the agencies are publishing the revised statement.

Consistent with the original statement, the revised statement continues to describe the measurement of expected credit losses under the current expected credit losses (CECL) methodology and the accounting for impairment on available-for-sale debt securities in accordance with Topic 326; the design, documentation, and validation of expected credit loss estimation processes, including the internal controls over these processes; the maintenance of appropriate ACLs; the responsibilities of boards of directors and management; and examiner reviews of ACLs.

III. Paperwork Reduction Act

In accordance with the requirements of the Paperwork Reduction Act of 1995 (PRA),[2] the agencies may not conduct or sponsor, and the respondent is not required to respond to, an information collection unless it displays a currently valid Office of Management and Budget (OMB) control number.

The revised statement does not create any new or revise any existing

[1] 85 FR 32991 (June 1, 2020).

[2] 44 U.S.C. 3501–3521.

collections of information under the PRA. Therefore, no information collection request will be submitted to the OMB for review.

IV. Final Interagency Policy Statement on Allowances for Credit Losses

The text of the final interagency Policy Statement is as follows:

Interagency Policy Statement on Allowances for Credit Losses (Revised April 2023)

Purpose

The Office of the Comptroller of the Currency (OCC), the Board of Governors of the Federal Reserve System (FRB), the Federal Deposit Insurance Corporation (FDIC), and the National Credit Union Administration (NCUA) (collectively, the agencies) are issuing this Interagency Policy Statement on Allowances for Credit Losses (hereafter, the policy statement) to promote consistency in the interpretation and application of Financial Accounting Standards Board (FASB) Accounting Standards Update 2016–13, *Financial Instruments—Credit Losses (Topic 326): Measurement of Credit Losses on Financial Instruments,* as well as the amendments issued since June 2016.[1] These updates are codified in Accounting Standards Codification (ASC) Topic 326, *Financial Instruments—Credit Losses* (FASB ASC Topic 326). FASB ASC Topic 326 applies to all banks, savings associations, credit unions, and financial institution holding companies (collectively, institutions), regardless of size, that file regulatory reports for which the reporting requirements conform to U.S. generally accepted accounting principles (GAAP).[2] This policy statement describes the measurement of expected credit losses in accordance with FASB ASC Topic 326; the design, documentation, and validation of expected credit loss estimation processes, including the internal controls over these processes; the maintenance of appropriate allowances for credit losses (ACLs); the responsibilities of boards of directors and management; and examiner reviews of ACLs.

This policy statement is effective at the time of each institution's adoption of FASB ASC Topic 326.[3] The following policy statements are no longer effective for an institution upon its adoption of FASB ASC Topic 326: the December 2006 Interagency Policy Statement on the Allowance for Loan and Lease Losses; the July 2001 Policy Statement on Allowance for Loan and Lease Losses Methodologies and Documentation for Banks and Savings Institutions; and the NCUA's May 2002 Interpretive Ruling and Policy Statement 02–3, Allowance for Loan and Lease Losses Methodologies and Documentation for Federally Insured Credit Unions (collectively, ALLL Policy Statements). After FASB ASC Topic 326 is effective for all institutions, the agencies will rescind the ALLL Policy Statements.

The principles described in this policy statement are consistent with GAAP, applicable regulatory reporting requirements,[4] safe and sound banking practices, and the agencies' codified guidelines establishing standards for safety and soundness.[5] The operational and managerial standards included in those guidelines, which address such matters as internal controls and information systems, an internal audit system, loan documentation, credit underwriting, asset quality, and earnings, should be appropriate for an institution's size and the nature, scope, and risk of its activities.

Scope

This policy statement describes the current expected credit losses (CECL) methodology for determining the ACLs applicable to loans held-for-investment, net investments in leases, and held-to-maturity debt securities accounted for at amortized cost.[6] It also describes the estimation of the ACL for an available-for-sale debt security in accordance with FASB ASC Subtopic 326–30. This policy statement does not address or supersede existing agency requirements or guidance regarding appropriate due diligence in connection with the purchase or sale of assets or determining whether assets are permissible to be purchased or held by institutions.[7]

The CECL methodology described in FASB ASC Topic 326 applies to financial assets measured at amortized cost, net investments in leases, and off-balance-sheet credit exposures (collectively, financial assets) including:

[1] The FASB issued Accounting Standards Update (ASU) 2016–13 on June 16, 2016. The following updates were published after the issuance of ASU 2016–13: ASU 2018–19—*Codification Improvements to Topic 326, Financial Instruments—Credit Losses;* ASU 2019–04—*Codification Improvements to Topic 326, Financial Instruments—Credit Losses, Topic 815, Derivatives and Hedging, and Topic 825, Financial Instruments;* ASU 2019–05—*Financial Instruments—Credit Losses (Topic 326): Targeted Transition Relief;* ASU 2019–10—*Financial Instruments—Credit Losses (Topic 326), Derivatives and Hedging (Topic 815), and Leases (Topic 842): Effective Dates;* ASU 2019–11—*Codification Improvements to Topic 326, Financial Instruments—Credit Losses;* and ASU 2022–02, *Financial Instruments—Credit Losses (Topic 326): Troubled Debt Restructurings and Vintage Disclosures.* Additionally, institutions may refer to FASB Staff Q&A-Topic 326, No. 1, *Whether the Weighted-Average Remaining Maturity Method is an Acceptable Method to Estimate Expected Credit Losses,* and FASB Staff Q&A-Topic 326, No. 2, *Developing an Estimate of Expected Credit Losses on Financial Assets.*

[2] U.S. branches and agencies of foreign banking organizations may choose to, but are not required to, maintain ACLs on a branch or agency level. These institutions should refer to the instructions for the FFIEC 002, *Report of Assets and Liabilities of U.S. Branches and Agencies of Foreign Banks;* Supervision and Regulation (SR) Letter 95–4, *Allowance for Loan and Lease Losses for U.S. Branches and Agencies of Foreign Banking Organizations;* and SR Letter 95–42, *Allowance for Loan and Lease Losses for U.S. Branches and Agencies of Foreign Banking Organizations.*

[3] As noted in Accounting Standards Update 2019–10, FASB ASC Topic 326 is effective for fiscal years beginning after December 15, 2019, including interim periods within those fiscal years, for public business entities that meet the definition of a Securities Exchange Commission (SEC) filer, excluding entities eligible to be small reporting companies as defined by the SEC. FASB ASC Topic 326 is effective for all other entities for fiscal years beginning after December 15, 2022, including interim periods within those fiscal years. For all entities, early application of FASB ASC Topic 326 is permitted as set forth in ASU 2016–13.

[4] For FDIC-insured depository institutions, section 37(a) of the Federal Deposit Insurance Act (12 U.SC. 1831n(a)) states that, in general, the accounting principles applicable to the Consolidated Reports of Condition and Income (Call Report) ''shall be uniform and consistent with generally accepted accounting principles.'' Section 202(a)(6)(C) of the Federal Credit Union Act (12 U.S.C. 1782(a)(6)(C)) establishes the same standard for federally insured credit unions with assets of $10 million or greater, providing that, in general, the ''[a]ccounting principles applicable to reports or statements required to be filed with the [NCUA] Board by each insured credit union shall be uniform and consistent with generally accepted accounting principles.'' Furthermore, regardless of asset size, all federally insured credit unions must comply with GAAP for certain financial reporting requirements relating to charges for loan losses. *See* 12 CFR 702.113(d).

[5] FDIC-insured depository institutions should refer to the *Interagency Guidelines Establishing Standards for Safety and Soundness* adopted by their primary federal regulator pursuant to section 39 of the Federal Deposit Insurance Act (12 U.S.C. 1831p–1) as follows: For national banks and federal savings associations, Appendix A to 12 CFR part 30; for state member banks, Appendix D to 12 CFR part 208; and for state nonmember banks, state savings associations, and insured state-licensed branches of foreign banks, Appendix A to 12 CFR part 364. Federally insured credit unions should refer to section 206(b)(1) of the Federal Credit Union Act (12 U.S.C. 1786) and 12 CFR 741.3.

[6] FASB ASC Topic 326 defines the amortized cost basis as the amount at which a financing receivable or investment is originated or acquired, adjusted for applicable accrued interest, accretion, or amortization of premium, discount, and net deferred fees or costs, collection of cash, write-offs, foreign exchange, and fair value hedge accounting adjustments.

[7] *See* the final guidance attached to OCC Bulletin 2012–18, *Guidance on Due Diligence Requirements in Determining Whether Securities Are Eligible for Investment* (for national banks and federal savings associations), 12 CFR part 1, *Investment Securities* (for national banks), and 12 CFR part 160, *Lending and Investment* (for federal savings associations). Federal credit unions should refer to 12 CFR part 703, *Investment and Deposit Activities.* Federally insured, state-chartered credit unions should refer to applicable state laws and regulations, as well as 12 CFR 741.219 (''investment requirements'').

- Financing receivables such as loans held-for-investment;
- Overdrawn deposit accounts (*i.e.* overdrafts) that are reclassified as held-for-investment loans;
- Held-to-maturity debt securities;
- Receivables that result from revenue transactions within the scope of Topic 606 on revenue from contracts with customers and Topic 610 on other income, which applies, for example, to the sale of foreclosed real estate;
- Reinsurance recoverables that result from insurance transactions within the scope of Topic 944 on insurance;
- Receivables related to repurchase agreements and securities lending agreements within the scope of Topic 860 on transfers and servicing;
- Net investments in leases recognized by a lessor in accordance with Topic 842 on leases; and
- Off-balance-sheet credit exposures including off-balance-sheet loan commitments, standby letters of credit, financial guarantees not accounted for as insurance, and other similar instruments except for those within the scope of Topic 815 on derivatives and hedging.

The CECL methodology does not apply to the following financial assets:

- Financial assets measured at fair value through net income, including those assets for which the fair value option has been elected;
- Available-for-sale debt securities; [8]
- Loans held-for-sale;
- Policy loan receivables of an insurance entity;
- Loans and receivables between entities under common control; and
- Receivables arising from operating leases.

Measurement of ACLs for Loans, Leases, Held-to-Maturity Debt Securities, and Off-Balance-Sheet Credit Exposures

Overview of ACLs

An ACL is a valuation account that is deducted from, or added to, the amortized cost basis of financial assets to present the net amount expected to be collected over the contractual term [9] of the assets. In estimating the net amount expected to be collected, management should consider the effects of past events, current conditions, and reasonable and supportable forecasts on the collectibility of the institution's financial assets.[10] FASB ASC Topic 326 requires management to use relevant forward-looking information and expectations drawn from reasonable and supportable forecasts when estimating expected credit losses.

ACLs are evaluated as of the end of each reporting period. The methods used to determine ACLs generally should be applied consistently over time and reflect management's current expectations of credit losses. Changes to ACLs resulting from these periodic evaluations are recorded through increases or decreases to the related provisions for credit losses (PCLs). When available information confirms that specific loans, securities, other assets, or portions thereof, are uncollectible, these amounts should be promptly written off [11] against the related ACLs.

Estimating appropriate ACLs involves a high degree of management judgment and is inherently imprecise. An institution's process for determining appropriate ACLs may result in a range of estimates for expected credit losses. An institution should support and record its best estimate within the range of expected credit losses.

Collective Evaluation of Expected Losses

FASB ASC Topic 326 requires expected losses to be evaluated on a collective, or pool, basis when financial assets share similar risk characteristics. Financial assets may be segmented based on one characteristic, or a combination of characteristics.

Examples of risk characteristics relevant to this evaluation include, but are not limited to:

- Internal or external credit scores or credit ratings;
- Risk ratings or classifications;
- Financial asset type;
- Collateral type;
- Size;
- Effective interest rate;
- Term;
- Geographical location;
- Industry of the borrower; and
- Vintage.

Other risk characteristics that may be relevant for segmenting held-to-maturity debt securities include issuer, maturity, coupon rate, yield, payment frequency, source of repayment, bond payment structure, and embedded options.

FASB ASC Topic 326 does not prescribe a process for segmenting financial assets for collective evaluation. Therefore, management should exercise judgment when establishing appropriate segments or pools. Management should evaluate financial asset segmentation on an ongoing basis to determine whether the financial assets in the pool continue to share similar risk characteristics. If a financial asset ceases to share risk characteristics with other assets in its segment, it should be moved to a different segment with assets sharing similar risk characteristics if such a segment exists.

If a financial asset does not share similar risk characteristics with other assets, expected credit losses for that asset should be evaluated individually. Individually evaluated assets should not be included in a collective assessment of expected credit losses.

Estimation Methods for Expected Credit Losses

FASB ASC Topic 326 does not require the use of a specific loss estimation method for purposes of determining ACLs. Various methods may be used to estimate the expected collectibility of financial assets, with those methods generally applied consistently over time. The same loss estimation method does not need to be applied to all financial assets. Management is not precluded from selecting a different method when it determines the method will result in a better estimate of ACLs.

Management may use a loss-rate method,[12] probability of default/loss given default (PD/LGD) method, roll-rate method, discounted cash flow method, a method that uses aging schedules, or another reasonable method to estimate expected credit losses. The selected method(s) should be appropriate for the financial assets being evaluated, consistent with the institution's size and complexity.

Contractual Term of a Financial Asset

FASB ASC Topic 326 requires an institution to measure estimated

[8] Refer to FASB ASC Subtopic 326–30, Financial Instruments—Credit Losses—Available-for-Sale Debt Securities (FASB ASC Subtopic 326–30).

[9] Consistent with FASB ASC Topic 326, an institution's determination of the contractual term should reflect the financial asset's contractual life adjusted for prepayments and renewal and extension options that are not unconditionally cancellable by the institution. For more information, see the ''Contractual Term of a Financial Asset'' section in this policy statement.

[10] Recoveries are a component of management's estimation of the net amount expected to be collected for a financial asset. Expected recoveries of amounts previously written off or expected to be written off that are included in ACLs may not exceed the aggregate amounts previously written off or expected to be written off. In some circumstances, the ACL for a specific portfolio or loan may be negative because the amount expected to be collected, including expected recoveries, exceeds the financial asset's amortized cost basis.

[11] Consistent with FASB ASC Topic 326, this policy statement uses the verbs ''write off'' and ''written off'' and the noun ''write-off.'' These terms are used interchangeably with ''charge off,'' ''charged off,'' and ''charge-off,'' respectively, in the agencies' regulations, guidance, and regulatory reporting instructions.

[12] Various loss-rate methods may be used to estimate expected credit losses under the CECL methodology. These include the weighted-average remaining maturity (WARM) method, vintage analysis, and the snapshot or open pool method.

expected credit losses over the contractual term of its financial assets, considering expected prepayments. Renewals, extensions, and modifications are excluded from the contractual term of a financial asset for purposes of estimating the ACL unless the renewal and extension options are part of the original or modified contract and are not unconditionally cancellable by the institution. If such renewal or extension options are present, management must evaluate the likelihood of a borrower exercising those options when determining the contractual term.

Historical Loss Information

Historical loss information generally provides a basis for an institution's assessment of expected credit losses. Historical loss information may be based on internal information, external information, or a combination of both. Management should consider whether the historical loss information may need to be adjusted for differences in current asset specific characteristics such as differences in underwriting standards, portfolio mix, or when historical asset terms do not reflect the contractual terms of the financial assets being evaluated as of the reporting date.

Management should then consider whether further adjustments to historical loss information are needed to reflect the extent to which current conditions and reasonable and supportable forecasts differ from the conditions that existed during the historical loss period. Adjustments to historical loss information may be quantitative or qualitative in nature and should reflect changes to relevant data (such as changes in unemployment rates, delinquency, or other factors associated with the financial assets).

Reasonable and Supportable Forecasts

When estimating expected credit losses, FASB ASC Topic 326 requires management to consider forward-looking information that is both reasonable and supportable and relevant to assessing the collectibility of cash flows. Reasonable and supportable forecasts may extend over the entire contractual term of a financial asset or a period shorter than the contractual term. FASB ASC Topic 326 does not prescribe a specific method for determining reasonable and supportable forecasts nor does it include bright lines for establishing a minimum or maximum length of time for reasonable and supportable forecast period(s). Judgment is necessary in determining an appropriate period(s) for each institution. Reasonable and supportable forecasts may vary by portfolio segment or individual forecast input. These forecasts may include data from internal sources, external sources, or a combination of both. Management is not required to search for all possible information nor incur undue cost and effort to collect data for its forecasts. However, reasonably available and relevant information should not be ignored in assessing the collectibility of cash flows. Management should evaluate the appropriateness of the reasonable and supportable forecast period(s) each reporting period, consistent with other inputs used in the estimation of expected credit losses.

Institutions may develop reasonable and supportable forecasts by using one or more economic scenarios. FASB ASC Topic 326 does not require the use of multiple economic scenarios; however, institutions are not precluded from considering multiple economic scenarios when estimating expected credit losses.

Reversion

When the contractual term of a financial asset extends beyond the reasonable and supportable period, FASB ASC Topic 326 requires reverting to historical loss information, or an appropriate proxy, for those periods beyond the reasonable and supportable forecast period (often referred to as the reversion period). Management may revert to historical loss information for each individual forecast input or based on the entire estimate of loss.

FASB ASC Topic 326 does not require the application of a specific reversion technique or use of a specific reversion period. Reversion to historical loss information may be immediate, occur on a straight-line basis, or use any systematic, rational method. Management may apply different reversion techniques depending on the economic environment or the financial asset portfolio. Reversion techniques are not accounting policy elections and should be evaluated for appropriateness each reporting period, consistent with other inputs used in the estimation of expected credit losses.

FASB ASC Topic 326 does not specify the historical loss information that is used in the reversion period. This historical loss information may be based on long-term average losses or on losses that occurred during a particular historical period(s). Management may use multiple historical periods that are not sequential. Management should not adjust historical loss information for existing economic conditions or expectations of future economic conditions for periods beyond the reasonable and supportable period. However, management should consider whether the historical loss information may need to be adjusted for differences in current asset specific characteristics such as differences in underwriting standards, portfolio mix, or when historical asset terms do not reflect the contractual terms of the financial assets being evaluated as of the reporting date.

Qualitative Factor Adjustments

The estimation of ACLs should reflect consideration of all significant factors relevant to the expected collectibility of the institution's financial assets as of the reporting date. Management may begin the expected credit loss estimation process by determining its historical loss information or obtaining reliable and relevant historical loss proxy data for each segment of financial assets with similar risk characteristics. Historical credit losses (or even recent trends in losses) generally do not, by themselves, form a sufficient basis to determine the appropriate levels for ACLs.

Management should consider the need to qualitatively adjust expected credit loss estimates for information not already captured in the loss estimation process. These qualitative factor adjustments may increase or decrease management's estimate of expected credit losses. Adjustments should not be made for information that has already been considered and included in the loss estimation process.

Management should consider the qualitative factors that are relevant to the institution as of the reporting date, which may include, but are not limited to:

- The nature and volume of the institution's financial assets;
- The existence, growth, and effect of any concentrations of credit;
- The volume and severity of past due financial assets, the volume of nonaccrual assets, and the volume and severity of adversely classified or graded assets; [13]

[13] For banks and savings associations, adversely classified or graded loans are loans rated ''substandard'' (or its equivalent) or worse under the institution's loan classification system. For credit unions, adversely graded loans are loans included in the more severely graded categories under the institution's credit grading system, *i.e.,* those loans that tend to be included in the credit union's ''watch lists.'' Criteria related to the classification of an investment security may be found in the interagency policy statement *Uniform Agreement on the Classification and Appraisal of Securities Held by Depository Institutions* issued by the FDIC, Board, and OCC in October 2013.

• The value of the underlying collateral for loans that are not collateral-dependent; [14]

• The institution's lending policies and procedures, including changes in underwriting standards and practices for collections, write-offs, and recoveries;

• The quality of the institution's credit review function;

• The experience, ability, and depth of the institution's lending, investment, collection, and other relevant management and staff;

• The effect of other external factors such as the regulatory, legal and technological environments; competition; and events such as natural disasters; and

• Actual and expected changes in international, national, regional, and local economic and business conditions and developments [15] in which the institution operates that affect the collectibility of financial assets.

Management may consider the following additional qualitative factors specific to held-to-maturity debt securities as of the reporting date: [16]

• The effect of recent changes in investment strategies and policies;

• The existence and effect of loss allocation methods, the definition of default, the impact of performance and market value triggers, and credit and liquidity enhancements associated with debt securities;

• The effect of structural subordination and collateral deterioration on tranche performance of debt securities;

• The quality of underwriting for any collateral backing debt securities; and

• The effect of legal covenants associated with debt securities.

Changes in the level of an institution's ACLs may not always be directionally consistent with changes in the level of qualitative factor adjustments due to the incorporation of reasonable and supportable forecasts in estimating expected losses. For example, if improving credit quality trends are evident throughout an institution's portfolio in recent years, but management's evaluation of reasonable and supportable forecasts indicates expected deterioration in credit quality of the institution's financial assets during the forecast period, the ACL as a percentage of the portfolio may increase.

Collateral-Dependent Financial Assets

FASB ASC Topic 326 describes a collateral-dependent asset as a financial asset for which the repayment is expected to be provided substantially through the operation or sale of the collateral when the borrower, based on management's assessment, is experiencing financial difficulty as of the reporting date. For regulatory reporting purposes, the ACL for a collateral-dependent loan is measured using the fair value of collateral, regardless of whether foreclosure is probable.[17]

When estimating the ACL for a collateral-dependent loan, FASB ASC Topic 326 requires the fair value of collateral to be adjusted to consider estimated costs to sell if repayment or satisfaction of the loan depends on the sale of the collateral. ACL adjustments for estimated costs to sell are not appropriate when the repayment of a collateral-dependent loan is expected from the operation of the collateral.

The fair value of collateral securing a collateral-dependent loan may change over time. If the fair value of the collateral as of the ACL evaluation date has decreased since the previous ACL evaluation date, the ACL should be increased to reflect the additional decrease in the fair value of the collateral. Likewise, if the fair value of the collateral has increased as of the ACL evaluation date, the increase in the fair value of the collateral is reflected through a reduction in the ACL. Any negative ACL that results is capped at the amount previously written off. Changes in the fair value of collateral described herein should be supported and documented through recent appraisals or evaluations.[18]

Purchased Credit-Deteriorated Assets

FASB ASC Topic 326 introduces the concept of purchased credit-deteriorated (PCD) assets. PCD assets are acquired financial assets that, at acquisition, have experienced more-than-insignificant deterioration in credit quality since origination. FASB ASC Topic 326 does not provide a prescriptive definition of more-than-insignificant credit deterioration. The acquiring institution's management should establish and document a reasonable process to consistently determine what constitutes a more-than-insignificant deterioration in credit quality.

When recording the acquisition of PCD assets, the amount of expected credit losses as of the acquisition date is added to the purchase price of the financial assets rather than recording these losses through PCLs. This establishes the amortized cost basis of the PCD assets. Any difference between the unpaid principal balance of the PCD assets and the amortized cost basis of the assets as of the acquisition date is the non-credit discount or premium. The initial ACL and non-credit discount or premium determined on a collective basis at the acquisition date are allocated to the individual PCD assets.

After acquisition, ACLs for PCD assets should be adjusted at each reporting date with a corresponding debit or credit to the PCLs to reflect management's current estimate of expected credit losses. The non-credit discount recorded at acquisition will be accreted into interest income over the remaining life of the PCD assets on a level-yield basis.

Financial Assets With Collateral Maintenance Agreements

Institutions may have financial assets that are secured by collateral (such as debt securities) and are subject to collateral maintenance agreements requiring the borrower to continuously replenish the amount of collateral securing the asset. If the fair value of the collateral declines, the borrower is

[14] *See* the ''Collateral-Dependent Financial Assets'' section of this policy statement for more information on collateral-dependent loans.

[15] Changes in economic and business conditions and developments included in qualitative factor adjustments are limited to those that affect the collectibility of an institution's financial assets and are relevant to the institution's financial asset portfolios. For example, an economic factor for current or forecasted unemployment at the national or state level may indicate a strong job market based on low national or state unemployment rates, but a local unemployment rate, which may be significantly higher, for example, because of the actual or forecasted loss of a major local employer may be more relevant to the collectibility of an institution's financial assets.

[16] This list is not all-inclusive, and all of the factors listed may not be relevant to all institutions.

[17] The agencies, at times, prescribe specific regulatory reporting requirements that fall within a range of acceptable practice under GAAP. These specific reporting requirements, such as the requirement for institutions to apply the practical expedient in ASC 326–20–35–5 for collateral-dependent loans, regardless of whether foreclosure is probable, have been adopted to achieve safety and soundness and other public policy objectives and to ensure comparability among institutions. The regulatory reporting requirement to apply the practical expedient for collateral-dependent financial assets is consistent with the agencies' long-standing practice for collateral-dependent loans, and it continues to be limited to collateral-dependent loans. It does not apply to other financial assets such as held-to-maturity debt securities that are collateral-dependent.

[18] For more information on regulatory expectations related to the use of appraisals and evaluations, see the *Interagency Appraisal and Evaluation Guidelines* published on December 10, 2010. Insured depository institutions should also refer to the interagency regulations on appraisals adopted by their primary federal regulator as follows: For national banks and federal savings associations, Subpart C of 12 CFR part 34; for state member banks, 12 CFR parts 208 and 225; for state nonmember banks, state savings associations, and insured state-licensed branches of foreign banks, 12 CFR part 323; and for federally insured credit unions, 12 CFR part 722.

required to provide additional collateral as specified by the agreement.

FASB ASC Topic 326 includes a practical expedient for financial assets with collateral maintenance agreements where the borrower is required to provide collateral greater than or equal to the amortized cost basis of the asset and is expected to continuously replenish the collateral. In those cases, management may elect the collateral maintenance practical expedient and measure expected credit losses for these qualifying assets based on the fair value of the collateral.[19] If the fair value of the collateral is greater than the amortized cost basis of the financial asset and management expects the borrower to replenish collateral as needed, management may record an ACL of zero for the financial asset when the collateral maintenance practical expedient is applied. Similarly, if the fair value of the collateral is less than the amortized cost basis of the financial asset and management expects the borrower to replenish collateral as needed, the ACL is limited to the difference between the fair value of the collateral and the amortized cost basis of the asset as of the reporting date when applying the collateral maintenance practical expedient.

Accrued Interest Receivable

FASB ASC Topic 326 includes accrued interest receivable in the amortized cost basis of a financial asset. As a result, accrued interest receivable is included in the amounts for which ACLs are estimated. Generally, any accrued interest receivable that is not collectible is written off against the related ACL.

FASB ASC Topic 326 permits a series of independent accounting policy elections related to accrued interest receivable that alter the accounting treatment described in the preceding paragraph. These elections are made upon adoption of FASB ASC Topic 326 and may differ by class of financing receivable or major security-type level. The available accounting policy elections[20] are:

- Management may elect not to measure ACLs for accrued interest receivable if uncollectible accrued interest is written off in a timely manner. Management should define and document its definition of a timely write-off.
- Management may elect to write off accrued interest receivable by either reversing interest income, recognizing the loss through PCLs, or through a combination of both methods.
- Management may elect to separately present accrued interest receivable from the associated financial asset in its regulatory reports and financial statements, if applicable. The accrued interest receivable is presented net of ACLs (if any).

Financial Assets With Zero Credit Loss Expectations

There may be certain financial assets for which the expectation of credit loss is zero after evaluating historical loss information, making necessary adjustments for current conditions and reasonable and supportable forecasts, and considering any collateral or guarantee arrangements that are not free-standing contracts. Factors to consider when evaluating whether expectations of zero credit loss are appropriate may include, but are not limited to:

- A long history of zero credit loss;
- A financial asset that is fully secured by cash or cash equivalents;
- High credit ratings from rating agencies with no expected future downgrade;[21]
- Principal and interest payments that are guaranteed by the U.S. government;
- The issuer, guarantor, or sponsor can print its own currency and the currency is held by other central banks as reserve currency; and
- The interest rate on the security is recognized as a risk-free rate.

A loan that is fully secured by cash or cash equivalents, such as certificates of deposit issued by the lending institution, would likely have zero credit loss expectations. Similarly, the guaranteed portion of a U.S. Small Business Administration (SBA) loan or security purchased on the secondary market through the SBA's fiscal and transfer agent would likely have zero credit loss expectations if these financial assets are unconditionally guaranteed by the U.S. government. Examples of held-to-maturity debt securities that may result in expectations of zero credit loss include U.S. Treasury securities as well as mortgage-backed securities issued and guaranteed by the Government National Mortgage Association, the Federal Home Loan Mortgage Corporation, and the Federal National Mortgage Association. Assumptions related to zero credit loss expectations should be included in the institution's ACL documentation.

Estimated Credit Losses for Off-Balance-Sheet Credit Exposures

FASB ASC Topic 326 requires that an institution estimate expected credit losses for off-balance-sheet credit exposures within the scope of FASB ASC Topic 326 over the contractual period during which the institution is exposed to credit risk. The estimate of expected credit losses should take into consideration the likelihood that funding will occur as well as the amount expected to be funded over the estimated remaining contractual term of the off-balance-sheet credit exposures. Management should not record an estimate of expected credit losses for off-balance-sheet exposures that are unconditionally cancellable by the issuer.

Management must evaluate expected credit losses for off-balance-sheet credit exposures as of each reporting date. While the process for estimating expected credit losses for these exposures is similar to the one used for on-balance-sheet financial assets, these estimated credit losses are not recorded as part of the ACLs because cash has not yet been disbursed to fund the contractual obligation to extend credit. Instead, these loss estimates are recorded as a liability, separate and distinct from the ACLs.[22] The amount needed to adjust the liability for expected credit losses for off-balance-sheet credit exposures as of each reporting date is reported in net income.

Measurement of the ACL for Available-for-Sale Debt Securities

FASB ASC Subtopic 326–30, *Financial Instruments—Credit Losses—Available-for-Sale Debt Securities* (FASB ASC Subtopic 326–30) describes the accounting for expected credit losses associated with available-for-sale debt securities. Credit losses for available-for-sale debt securities are evaluated as of each reporting date when the fair value is less than amortized cost. FASB ASC

[19] For example, an institution enters into a reverse repurchase agreement with a collateral maintenance agreement. Management may not need to record the expected credit losses at each reporting date as long as the fair value of the security collateral is greater than the amortized cost basis of the reverse repurchase agreement. Refer to ASC 326–20–55–46 for more information.

[20] The accounting policy elections related to accrued interest receivable that are described in this paragraph also apply to accrued interest receivable for an available-for-sale debt security that, for purposes of identifying and measuring an impairment, exclude the applicable accrued interest from both the fair value and amortized cost basis of the securities.

[21] Management should not rely solely on credit rating agencies but should also make its own assessment based on third party research, default statistics, and other data that may indicate a decline in credit rating.

[22] The ACL associated with off-balance-sheet credit exposures is included in the ''Allowance for credit losses on off-balance-sheet credit exposures'' in *Schedule RC–G—Other Liabilities* in the Call Report and in the *Liabilities* schedule in NCUA Call Report Form 5300.

Subtopic 326–30 requires credit losses to be calculated individually, rather than collectively, using a discounted cash flow method, through which management compares the present value of expected cash flows with the amortized cost basis of the security. An ACL is established, with a charge to the PCL, to reflect the credit loss component of the decline in fair value below amortized cost. If the fair value of the security increases over time, any ACL that has not been written off may be reversed through a credit to the PCL. The ACL for an available-for-sale debt security is limited by the amount that the fair value is less than the amortized cost, which is referred to as the fair value floor.

If management intends to sell an available-for-sale debt security or will more likely than not be required to sell the security before recovery of the amortized cost basis, the security's ACL should be written off and the amortized cost basis of the security should be written down to its fair value at the reporting date with any incremental impairment reported in income.

A change during the reporting period in the non-credit component of any decline in fair value below amortized cost on an available-for-sale debt security is reported in other comprehensive income, net of applicable income taxes.[23]

When evaluating impairment for available-for-sale debt securities, management may evaluate the amortized cost basis including accrued interest receivable, or may evaluate the accrued interest receivable separately from the remaining amortized cost basis. If evaluated separately, accrued interest receivable is excluded from both the fair value of the available-for-sale debt security and its amortized cost basis.[24]

Documentation Standards

For financial and regulatory reporting purposes, ACLs and PCLs must be determined in accordance with GAAP. ACLs and PCLs should be well documented, with clear explanations of the supporting analyses and rationale. Sound policies, procedures, and control systems should be appropriately tailored to an institution's size and complexity, organizational structure, business environment and strategy, risk appetite, financial asset characteristics, loan administration procedures, investment strategy, and management information systems.[25] Maintaining, analyzing, supporting, and documenting appropriate ACLs and PCLs in accordance with GAAP is consistent with safe and sound banking practices.

The policies and procedures governing an institution's ACL processes and the controls over these processes should be designed, implemented, and maintained to reasonably estimate expected credit losses for financial assets and off-balance-sheet credit exposures as of the reporting date. The policies and procedures should describe management's processes for evaluating the credit quality and collectibility of financial asset portfolios, including reasonable and supportable forecasts about changes in the credit quality of these portfolios, through a disciplined and consistently applied process that results in an appropriate estimate of the ACLs. Management should review and, as needed, revise the institution's ACL policies and procedures at least annually, or more frequently if necessary.

An institution's policies and procedures for the systems, processes, and controls necessary to maintain appropriate ACLs should address, but not be limited to:

- Processes that support the determination and maintenance of appropriate levels for ACLs that are based on a comprehensive, well-documented, and consistently applied analysis of an institution's financial asset portfolios and off-balance-sheet credit exposures. The analyses and loss estimation processes used should consider all significant factors that affect the credit risk and collectibility of the financial asset portfolios;
- The roles, responsibilities, and segregation of duties of the institution's senior management and other personnel who provide input into ACL processes, determine ACLs, or review ACLs. These departments and individuals may include accounting, financial reporting, treasury, investment management, lending, special asset or problem loan workout teams, retail collections and foreclosure groups, credit review, model risk management, internal audit, and others, as applicable. Individuals with responsibilities related to the estimation of ACLs should be competent and well-trained, with the ability to escalate material issues;
- Processes for determining the appropriate historical period(s) to use as the basis for estimating expected credit losses and approaches for adjusting historical credit loss information to reflect differences in asset specific characteristics, as well as current conditions and reasonable and supportable forecasts that are different from conditions existing in the historical period(s);
- Processes for determining and revising the appropriate techniques and periods to revert to historical credit loss information when the contractual term of a financial asset or off-balance-sheet credit exposure extends beyond the reasonable and supportable forecast period(s);
- Processes for segmenting financial assets for estimating expected credit losses and periodically evaluating the segments to determine whether the assets continue to share similar risk characteristics;
- Data capture and reporting systems that supply the quality and breadth of relevant and reliable information necessary, whether obtained internally or externally, to support and document the estimates of appropriate ACLs for regulatory reporting requirements and, if applicable, financial statement and disclosure requirements;
- The description of the institution's systematic and logical loss estimation process(es) for determining and consolidating expected credit losses to ensure that the ACLs are recorded in accordance with GAAP and regulatory reporting requirements. This may include, but is not limited to:
  - Management's judgments, accounting policy elections, and application of practical expedients in determining the amount of expected credit losses;
  - The process for determining when a loan is collateral-dependent;
  - The process for determining the fair value of collateral, if any, used as an input when estimating the ACL, including the basis for making any adjustments to the market value conclusion and how costs to sell, if applicable, are calculated;
  - The process for determining when a financial asset has zero credit loss expectations;
  - The process for determining expected credit losses when a financial asset has a collateral maintenance provision; and

[23] Non-credit impairment on an available-for-sale debt security that is not required to be recorded through the ACL should be reported in other comprehensive income as described in ASC 326–30–35–2.

[24] The accounting policy elections described in the ''Accrued Interest Receivable'' section of this policy statement apply to accrued interest receivable recorded for an available-for-sale debt security if an institution excludes applicable accrued interest receivable from both the fair value and amortized cost basis of the security for purposes of identifying and measuring impairment.

[25] Management often documents policies, procedures, and controls related to ACLs in accounting or credit risk management policies, or a combination thereof.

○ A description of and support for qualitative factors that affect collectibility of financial assets;

• Procedures for validating and independently reviewing the loss estimation process as well as any changes to the process from prior periods;

• Policies and procedures for the prompt write-off of financial assets, or portions of financial assets, when available information confirms the assets to be uncollectible, consistent with regulatory reporting requirements; and

• The systems of internal controls used to confirm that the ACL processes are maintained and periodically adjusted in accordance with GAAP and interagency guidelines establishing standards for safety and soundness.

Internal control systems for the ACL estimation processes should:

• Provide reasonable assurance regarding the relevance, reliability, and integrity of data and other information used in estimating expected credit losses;

• Provide reasonable assurance of compliance with laws, regulations, and the institution's policies and procedures;

• Provide reasonable assurance that the institution's financial statements are prepared in accordance with GAAP, and the institution's regulatory reports are prepared in accordance with the applicable instructions;

• Include a well-defined and effective loan review and grading process that is consistently applied and identifies, measures, monitors, and reports asset quality problems in an accurate, sound and timely manner. The loan review process should respond to changes in internal and external factors affecting the level of credit risk in the portfolio; and

• Include a well-defined and effective process for monitoring credit quality in the debt securities portfolio.

Analyzing and Validating the Overall Measurement of ACLs

To ensure that ACLs are presented fairly, in accordance with GAAP and regulatory reporting requirements, and are transparent for regulatory examinations, management should document its measurements of the amounts of ACLs reported in regulatory reports and financial statements, if applicable, for each type of financial asset (*e.g.,* loans, held-to-maturity debt securities, and available-for-sale debt securities) and for off-balance-sheet credit exposures. This documentation should include ACL calculations, qualitative adjustments, and any adjustments to the ACLs that are required as part of the internal review and challenge process. The board of directors, or a committee thereof, should review management's assessments of and justifications for the reported amounts of ACLs.

Various techniques are available to assist management in analyzing and evaluating the ACLs. For example, comparing estimates of expected credit losses to actual write-offs in aggregate, and by portfolio, may enable management to assess whether the institution's loss estimation process is sufficiently designed.[26] Further, comparing the estimate of ACLs to actual write-offs at the financial asset portfolio level allows management to analyze changing portfolio characteristics, such as the volume of assets or increases in write-off rates, which may affect future forecast adjustments. Techniques applied in these instances do not have to be complex to be effective, but, if used, should be commensurate with the institution's size and complexity.

Ratio analysis may also be useful for evaluating the overall reasonableness of ACLs. Ratio analysis assists in identifying divergent or emerging trends in the relationship of ACLs to other factors such as adversely classified or graded loans, past due and nonaccrual loans, total loans, historical gross write-offs, net write-offs, and historic delinquency and default trends for securities.

Comparing the institution's ACLs to those of peer institutions may provide management with limited insight into management's own ACL estimates. Management should apply caution when performing peer comparisons as there may be significant differences among peer institutions in the mix of financial asset portfolios, reasonable and supportable forecast period assumptions, reversion techniques, the data used for historical loss information, and other factors.

When used prudently, comparisons of estimated expected losses to actual write-offs, ratio analysis, and peer comparisons can be helpful as a supplemental check on the reasonableness of management's assumptions and analyses. Because appropriate ACLs are institution-specific estimates, the use of comparisons does not eliminate the need for a comprehensive analysis of financial asset portfolios and the factors affecting their collectibility.

When an appropriate expected credit loss framework has been used to estimate expected credit losses, it is inappropriate for the board of directors or management to make further adjustments to ACLs for the sole purpose of reporting ACLs that correspond to a peer group median, a target ratio, or a budgeted amount. Additionally, neither the board of directors nor management should further adjust ACLs beyond what has been appropriately measured and documented in accordance with FASB ASC Topic 326.

After analyzing ACLs, management should periodically validate the loss estimation process, and any changes to the process, to confirm that the process remains appropriate for the institution's size, complexity, and risk profile. The validation process should include procedures for review by a party with appropriate knowledge, technical expertise, and experience who is independent of the institution's credit approval and ACL estimation processes. A party who is independent of these processes could be from internal audit staff, a risk management unit of the institution independent of management supervising these processes, or a contracted third-party. One party need not perform the entire analysis as the validation may be divided among various independent parties.[27]

Responsibilities of the Board of Directors

The board of directors, or a committee thereof, is responsible for overseeing management's significant judgments and estimates used in determining appropriate ACLs. Evidence of the board of directors' oversight activities is subject to review by examiners. These activities should include, but are not limited to:

• Retaining experienced and qualified management to oversee all ACL and PCL activities;

• Reviewing and approving the institution's written loss estimation policies, including any revisions thereto, at least annually;

[26] Institutions using models in the loss estimation process may incorporate a qualitative factor adjustment in the estimate of expected credit losses to capture the variance between modeled credit loss expectations and actual historical losses when the model is still considered predictive and fit for use. Institutions should monitor this variance, as well as changes to the variance, to determine if the variance is significant or material enough to warrant further changes to the model.

[27] Engaging the institution's external auditor to perform the validation process described in this paragraph when the external auditor also conducts the institution's independent financial statement audit, may impair the auditor's independence under applicable auditor independence standards and prevent the auditor from performing an independent audit of the institution's financial statements.

• Reviewing management's assessment of the loan review system and management's conclusion and support for whether the system is sound and appropriate for the institution's size and complexity;

• Reviewing management's assessment of the effectiveness of processes and controls for monitoring the credit quality of the investment portfolio;

• Reviewing management's assessments of and justifications for the estimated amounts reported each period for the ACLs and the PCLs;

• Requiring management to periodically validate, and, when appropriate, revise loss estimation methods;

• Approving the internal and external audit plans for the ACLs, as applicable; and

• Reviewing any identified audit findings and monitoring resolution of those items.

Responsibilities of Management

Management is responsible for maintaining ACLs at appropriate levels and for documenting its analyses in accordance with the concepts and requirements set forth in GAAP, regulatory reporting requirements, and this policy statement. Management should evaluate the ACLs reported on the balance sheet as of the end of each period (and for credit unions, prior to paying dividends), and debit or credit the related PCLs to bring the ACLs to an appropriate level as of each reporting date. The determination of the amounts of the ACLs and the PCLs should be based on management's current judgments about the credit quality of the institution's financial assets and should consider known and expected relevant internal and external factors that significantly affect collectibility over reasonable and supportable forecast periods for the institution's financial assets as well as appropriate reversion techniques applied to periods beyond the reasonable and supportable forecast periods. Management's evaluations are subject to review by examiners.

In carrying out its responsibility for maintaining appropriate ACLs, management should adopt and adhere to written policies and procedures that are appropriate to the institution's size and the nature, scope, and risk of its lending and investing activities. These policies and procedures should address the processes and activities described in the ''Documentation Standards'' section of this policy statement.

Management fulfills other responsibilities that aid in the maintenance of appropriate ACLs. These activities include, but are not limited to:

• Establishing and maintaining appropriate governance activities for the loss estimation process(es). These activities may include reviewing and challenging the assumptions used in estimating expected credit losses and designing and executing effective internal controls over the credit loss estimation method(s);

• Periodically performing procedures that compare credit loss estimates to actual write-offs, at the portfolio level and in aggregate, to confirm that amounts recorded in the ACLs were sufficient to cover actual credit losses. This analysis supports that appropriate ACLs were recorded and provides insight into the loss estimation process's ability to estimate expected credit losses. This analysis is not intended to reflect the accuracy of management's economic forecasts;

• Periodically validating the loss estimation process(es), including changes, if any, to confirm it is appropriate for the institution; and

• Engaging in sound risk management of third parties involved [28] in ACL estimation process(es), if applicable, to ensure that the loss estimation processes are commensurate with the level of risk, the complexity of the third-party relationship and the institution's organizational structure.

Additionally, if an institution uses loss estimation models in determining expected credit losses, management should evaluate the models before they are employed and modify the model logic and assumptions, as needed, to help ensure that the resulting loss estimates are consistent with GAAP and regulatory reporting requirements.[29] To demonstrate such consistency, management should document its evaluations and conclusions regarding the appropriateness of estimating credit losses with models. When used for multiple purposes within an institution, models should be specifically adjusted and validated for use in ACL loss estimation processes. Management should document and support any adjustments made to the models, the outputs of the models, and compensating controls applied in determining the estimated expected credit losses.

Examiner Review of ACLs

Examiners are expected to assess the appropriateness of management's loss estimation processes and the appropriateness of the institution's ACL balances as part of their supervisory activities. The review of ACLs, including the depth of the examiner's assessment, should be commensurate with the institution's size, complexity, and risk profile. As part of their supervisory activities, examiners generally assess the credit quality and credit risk of an institution's financial asset portfolios, the adequacy of the institution's credit loss estimation processes, the adequacy of supporting documentation, and the appropriateness of the reported ACLs and PCLs in the institution's regulatory reports and financial statements, if applicable. Examiners may consider the significant factors that affect collectibility, including the value of collateral securing financial assets and any other repayment sources. Supervisory activities may include evaluating management's effectiveness in assessing credit risk for debt securities (both prior to purchase and on an on-going basis). In reviewing the appropriateness of an institution's ACLs, examiners may:

• Evaluate the institution's ACL policies and procedures and assess the loss estimation method(s) used to arrive at overall estimates of ACLs, including the documentation supporting the reasonableness of management's assumptions, valuations, and judgments. Supporting activities may include, but, are not limited to:

○ Evaluating whether management has appropriately considered historical loss information, current conditions, and reasonable and supportable forecasts, including significant qualitative factors that affect the collectibility of the financial asset portfolios;

○ Assessing loss estimation techniques, including loss estimation models, if applicable, as well as the incorporation of qualitative adjustments to determine whether the resulting estimates of expected credit losses are in

[28] Guidance on third party service providers may be found in SR Letter 13–19/Consumer Affairs Letter 13–21, *Guidance on Managing Outsourcing Risk* (FRB); Financial Institution Letter (FIL) 44–2008, *Guidance for Managing Third Party Risk* (FDIC); Supervisory Letter No. 07–01, *Evaluating Third Party Relationships* (NCUA); and OCC Bulletin 2013–29, *Third Party Relationships: Risk Management Guidance,* OCC Bulletin 2017–7, *Third Party Relationships: Supplemental Examination Procedures,* and OCC Bulletin 2017–21, *Third Party Relationships: Frequently Asked Questions to Supplement OCC Bulletin 2013–29.*

[29] *See* the interagency statement titled, *Supervisory Guidance on Model Risk Management,* published by the Board in SR Letter 11–7 and OCC Bulletin 2011–12 on April 4, 2011. The statement also addresses the incorporation of vendor products into an institution's model risk management framework following the same principles relevant to in-house models. The FDIC adopted the interagency statement on June 7, 2017. Institutions supervised by the FDIC should refer to FIL–22–2017, *Adoption of Supervisory Guidance on Model Risk Management,* including the statement of applicability in the FIL.

conformity with GAAP and regulatory reporting requirements; and

○ Evaluating the adequacy of the documentation and the effectiveness of the controls used to support the measurement of the ACLs;

• Assess the effectiveness of board oversight as well as management's effectiveness in identifying, measuring, monitoring, and controlling credit risk. This may include, but is not limited to, a review of underwriting standards and practices, portfolio composition and trends, credit risk review functions, risk rating systems, credit administration practices, investment securities management practices, and related management information systems and reports;

• Review the appropriateness and reasonableness of the overall level of the ACLs relative to the level of credit risk, the complexity of the institution's financial asset portfolios, and available information relevant to assessing collectibility, including consideration of current conditions and reasonable and supportable forecasts. Examiners may include a quantitative analysis (*e.g.,* using management's results comparing expected write-offs to actual write-offs as well as ratio analysis) to assess the appropriateness of the ACLs. This quantitative analysis may be used to determine the reasonableness of management's assumptions, valuations, and judgments and understand variances between actual and estimated credit losses. Loss estimates that are consistently and materially over or under predicting actual losses may indicate a weakness in the loss forecasting process;

• Review the ACLs reported in the institution's regulatory reports and in any financial statements and other key financial reports to determine whether the reported amounts reconcile to the institution's estimate of the ACLs. The consolidated loss estimates determined by the institution's loss estimation method(s) should be consistent with the final ACLs reported in its regulatory reports and financial statements, if applicable;

• Verify that models used in the loss estimation process, if any, are subject to initial and ongoing validation activities. Validation activities include evaluating and concluding on the conceptual soundness of the model, including developmental evidence, performing ongoing monitoring activities, including process verification and benchmarking, and analyzing model output.[30] Examiners may review model validation findings, management's response to those findings, and applicable action plans to remediate any concerns, if applicable. Examiners may also assess the adequacy of the institution's processes to implement changes in a timely manner; and

• Review the effectiveness of the institution's third-party risk management framework associated with the estimation of ACLs, if applicable, to assess whether the processes are commensurate with the level of risk, the complexity and nature of the relationship, and the institution's organizational structure. Examiners may determine whether management monitors material risks and deficiencies in third-party relationships, and takes appropriate action as needed.[31]

When assessing the appropriateness of ACLs, examiners should recognize that the processes, loss estimation methods, and underlying assumptions an institution uses to calculate ACLs require the exercise of a substantial degree of management judgment. Even when an institution maintains sound procedures, controls, and monitoring activities, an estimate of expected credit losses is not a single precise amount and may result in a range of acceptable outcomes for these estimates. This is a result of the flexibility FASB ASC Topic 326 provides institutions in selecting loss estimation methods and the wide range of qualitative and forecasting factors that are considered.

Management's ability to estimate expected credit losses should improve over the contractual term of financial assets as substantive information accumulates regarding the factors affecting repayment prospects. Examiners generally should accept an institution's ACL estimates and not seek adjustments to the ACLs, when management has provided adequate support for the loss estimation process employed, and the ACL balances and the assumptions used in the ACL estimates are in accordance with GAAP and regulatory reporting requirements. It is inappropriate for examiners to seek adjustments to ACLs for the sole purpose of achieving ACL levels that correspond to a peer group median, a target ratio, or a benchmark amount when management has used an appropriate expected credit loss framework to estimate expected credit losses.

If the examiner concludes that an institution's reported ACLs are not appropriate or determines that its ACL evaluation processes or loss estimation method(s) are otherwise deficient, these concerns should be noted in the report of examination and communicated to the board of directors and senior management.[32] Additional supervisory action may be taken based on the magnitude of the shortcomings in ACLs, including the materiality of any errors in the reported amounts of ACLs.

Michael J. Hsu,

Acting Comptroller of the Currency.

By order of the Board of Governors of the Federal Reserve System.

Ann E. Misback,

Secretary of the Board.

Federal Deposit Insurance Corporation.

By order of the Board of Directors.

Dated at Washington, DC, on March 31, 2023.

James P. Sheesley,

Assistant Executive Secretary.

By the National Credit Union Administration Board.

Melane Conyers-Ausbrooks,

Secretary of the Board.

[FR Doc. 2023–08876 Filed 4–26–23; 8:45 am]

BILLING CODE 4810–33–P; 6210–01–P; 6714–01–P; 7535–01–P

[30] *See* footnote 29.

[31] *See* footnote 28.

[32] Each agency has formal and informal communication channels for sharing supervisory information with the board of directors and management depending on agency practices and the nature of the information being shared. These channels may include, but are not limited to, institution specific supervisory letters, letters to the industry, transmittal letters, visitation findings summary letters, targeted review conclusion letters, or official examination or inspection reports.

DEPARTMENT OF STATE

22 CFR Part 121

[Public Notice: 11986]

RIN 1400–AF27

International Traffic in Arms Regulations: U.S. Munitions List Targeted Revisions

AGENCY: Department of State.

ACTION: Interim final rule; request for comments.

SUMMARY: The Department of State (the Department) amends the International Traffic in Arms Regulations (ITAR) to remove from U.S. Munitions List (USML) Category XI certain high-energy storage capacitors and to clearly identify the high-energy storage capacitors that remain in USML Category XI.

DATES: Effective date May 21, 2023.

Send comments by May 30, 2023.

ADDRESSES: Interested parties may submit comments to the Department of State by any of the following methods:

• *Visit the Regulations.gov website at: http://www.regulations.gov* and search for the docket number DOS–2023–0003.

• *Email: DDTCPublicComments@state.gov.* Commenting parties must include RIN 1400–AF27 in the subject line of the email message.

• All comments should include the commenter's name, the organization the commenter represents, if applicable, and the commenter's address. If the Department of State is unable to read a comment for any reason, and cannot contact the commenting party for clarification, the Department of State may not be able to consider your comment. After the conclusion of the comment period, the Department of State will publish a Final Rule (in which it will address relevant comments) as expeditiously as possible.

FOR FURTHER INFORMATION CONTACT: Mr. Chris Weil, Office of Defense Trade Controls Policy, Department of State, telephone (202) 571–7051; email *DDTCCustomerService@state.gov*

SUBJECT: ITAR Amendment—USML Targeted Revisions (RIN 1400–AF27).

SUPPLEMENTARY INFORMATION: The Department of State's Directorate of Defense Trade Controls (DDTC) administers the ITAR (22 CFR parts 120 through 130) to regulate the export, reexport, retransfer, and temporary import of, and brokering activities related to certain items and services. The articles, services, and information subject to the jurisdiction of the Department of State under the ITAR (*e.g.,* ''defense articles'' and ''defense services'') are identified on the USML at ITAR § 121.1. Items not subject to the ITAR or to the exclusive licensing jurisdiction of any other Department or Agency of the U.S. Government are subject to the Export Administration Regulations (EAR, 15 CFR parts 730 through 774, which includes the Commerce Control List (CCL) in Supplement No. 1 to part 774), administered by the Bureau of Industry and Security (BIS), U.S. Department of Commerce. This rule does not modify the list of defense articles subject to permanent import control by the Attorney General, as enumerated on the U.S. Munitions Import List at 27 CFR part 447.

The Department seeks to control on the USML those articles and services that provide a critical military or intelligence advantage. The Department undertakes these revisions pursuant to the discretionary statutory authority afforded the President in section 38(a)(1) of the AECA and delegated to the Department of State in Executive Order 13637, to control the export and temporary import of defense articles and defense services in furtherance of world peace and the security and foreign policy of the United States and to designate those items which constitute the USML. The Department, informed by consultations with its interagency partners, determined the articles removed from the USML under this rulemaking no longer warrant control pursuant to the ITAR.

Targeted USML Revisions

With this rulemaking, the Department is removing from USML Category XI certain high-energy storage capacitors that it assesses have broad commercial application, are available internationally, and do not provide a critical military or intelligence advantage. The Department assesses that adding a 125-volt (125 V) voltage criterion for the high-energy capacitors described on the USML ensures the capacitors that remain warrant control on the USML. While adding the 125 V criterion to paragraph (c)(5), the Department is simultaneously reorganizing the paragraph to delineate each element of the control criteria more clearly and adding a note to explain those criteria.

These changes are warranted because the Department found that certain low-voltage high-energy storage capacitor technology has progressed such that many models that exceed the existing USML control criteria no longer provide a critical military or intelligence advantage. Although these lower-voltage capacitors meet the energy density and full energy life criteria, the technology for these lower-voltage capacitors is well understood, and the capacitors have been extensively integrated into commercial applications, such as Wi-Fi routers and civil aviation aircraft transponders. Further, comparable capacitors manufactured in other countries are widely available internationally without multilateral export restrictions placed on them.

The Department considered two methods of implementation for specifying this voltage criterion. First, the Department considered applying a voltage rating criterion, assessing it to be an industry-standard term used to describe a value for existing capacitors that is readily accessible to exporters and customers through the specifications typically provided by Original Equipment Manufacturers (OEMs). The Department assessed that this criterion would facilitate compliance and implementation. This approach also would be in keeping with the Department's intent to establish threshold criteria in language readily understood by practitioners. However, it is possible different OEMs determine voltage ratings using differing methodologies or underlying assumptions, which could produce significantly different ratings for equivalent products. The Department assesses this drawback could be mitigated by clearly defining the term ''voltage rating'' in the regulation but would require more information to do so appropriately.

Second, the Department considered identifying the voltage performance capability of the capacitors, as performance capability can be empirically tested and is potentially less prone to misinterpretation. However, it is not clear to the Department how much additional testing would be required to confirm a given capacitor model's capability or whether customers have ready access to that information to facilitate compliance.

In this interim final rule, the Department implements the 125 V criterion based on the voltage at which the capacitor is capable of operating, in order to allow for public comment on advantages or disadvantages of each approach and on potential definitions for ''voltage rating'' and ''capable of.''

The Department further reaffirms a core concept for compliance programs:

When a commodity is described by a single criterion within a USML entry, it is imperative to evaluate the remaining criteria of the control to verify whether the commodity is described—even when the commodity was not intentionally designed to meet or exceed the control criteria.

Request for Comments

Consistent with its ongoing USML review process, the Department is requesting public comments on the revisions described in this rulemaking. The Department encourages the public to provide comments directly related to this rule and responsive to the questions described below. To facilitate timely review and assessment, comments should be provided in a concise sentence or paragraph, followed by supporting explanatory paragraphs and examples, with each distinct comment treated separately (as opposed to multiple comments in one paragraph or section). The Department requests comments focused on the following questions:

1. Please provide specific examples of any high-energy storage capacitors that exceed the 125 V threshold but fall under a 500 V threshold that you believe do not provide a critical military advantage.

2. What implementation challenges are presented by the use of either ''capable of operating'' or ''voltage

rating'' to describe the voltage threshold?

3. Is there additional guidance that would be useful in parsing ''capable of operating,'' as used in this rule?

a. Is it sufficiently clear in the ''capable of operating'' implementation that the voltage capability is for steady-state, versus transient or surge, operating conditions?

b. Is it sufficiently clear in the 'capable of operating' implementation that the voltage capability does not vary based on circuit design margins?

4. Could a ''voltage rating'' criterion be implemented more easily and consistently? If so,

a. Do you assess that a sufficient definition of ''voltage rating'' would be ''the value, based on the capacitor's design, testing, and evaluation, that describes the maximum amount of continuous voltage that will not damage the capacitor''?

b. Is it sufficiently clear in the alternative 'voltage rating' implementation that the voltage rating is for steady-state, versus transient or surge, operating conditions?

c. Is it sufficiently clear in the alternative 'voltage rating' implementation that the voltage rating does not vary based on circuit design margins?

d. What would be the effect of adding a temperature criterion (*e.g.,* ''measured at or below 85 °C'') and is it accurate that the voltage rating of a capacitor only declines with an increase in temperature?

e. Would a criterion such as ''will not reduce the capacitor's full energy life below 10,000 discharges'' address the fact that each charge and discharge cycle likely inflicts some damage on a capacitor?

5. Are these revisions unclear in any way, or can they be more concisely stated? For example, please identify any:

—Terms that you find ambiguous in definition or context

—Constructions or language that vary from existing USML entries

6. Are there other technical issues directly related to this entry which the Department should address in a future rulemaking?

Comment Submissions

Instructions

Include the agency name and docket number or Regulatory Information Number (RIN) (1400–AF27) for all submissions related to this rulemaking. Relevant comments may be posted without substantive change to the DDTC website (*www.pmddtc.state.gov*). Please remove any personal information, because the Department will not edit comments. Parties who wish to comment anonymously may do so by submitting their comments via *www.regulations.gov,* leaving the fields that would identify the commenter blank and including no identifying information in the comment itself. Commenters are cautioned not to include proprietary, export-controlled, or other sensitive information that they are not comfortable making public in their comments. If such information would provide useful insight to the comment: (1) assemble that information in a separate document with proprietary markings; (2) include ''Proprietary supplement on file with: [provide POC]'' as the first line in the body of the email submission; (3) submit the public portion of the comment via email; and (4) call DDTC at (202) 663–1282 to coordinate submission of the proprietary supplement.

Regulatory Analysis and Notices

Administrative Procedure Act

This rulemaking is exempt from section 553 (Rulemaking) and section 554 (Adjudications) of the Administrative Procedure Act (APA) pursuant to 5 U.S.C. 553(a)(1) as a military or foreign affairs function of the United States Government. Although the Department is of the opinion that this rule is exempt from the rulemaking provisions of the APA, the Department is publishing this rule with a 30-day provision for public comment and a delayed effective date, without prejudice to its determination that controlling the import and export of defense articles and defense services is a military or foreign affairs function.

Regulatory Flexibility Act

Since the Department is of the opinion that this rule is exempt from the provisions of 5 U.S.C. 553, there is no requirement for an analysis under the Regulatory Flexibility Act.

Unfunded Mandates Reform Act of 1995

This rulemaking does not involve a mandate that will result in the expenditure by State, local, and tribal governments, in the aggregate, or by the private sector of $100 million or more in any year and it will not significantly or uniquely affect small governments. Therefore, no actions were deemed necessary under the provisions of the Unfunded Mandates Reform Act of 1995.

Congressional Review Act

The Department assesses that this rulemaking is not a major rule under the criteria of 5 U.S.C. 804. Moving the subject commodities to the jurisdiction of the EAR will reduce regulatory restrictions and compliance costs, particularly for U.S. exporters as well as some importers who source the subject commodities from abroad. This will not increase costs or prices and should have no adverse effects on competition, employment, investment, productivity, innovation, or the ability of U.S.-based enterprises to compete with foreign-based enterprises in domestic and export markets. To the contrary, the rule is expected to reduce regulatory compliance costs in the long term and facilitate U.S. manufacturers' competitiveness with foreign manufacturers of similar commodities. The Department does not, however, expect this change to have an annual effect on the economy of $100 million or more.

Executive Orders 12372 and 13132

This rulemaking does not have sufficient federalism implications to require consultations or warrant the preparation of a federalism summary impact statement. The regulations implementing Executive Order 12372 regarding intergovernmental consultation on Federal programs and activities do not apply to this rulemaking.

Executive Orders 12866 and 13563

Executive Orders 12866 and 13563 direct agencies to assess all costs and benefits of available regulatory alternatives and, if regulation is necessary, to select regulatory approaches that maximize net benefits (including potential economic, environmental, public health and safety effects, distributed impacts, and equity). Executive Order 13563 emphasizes the importance of quantifying both costs and benefits, of reducing costs, of harmonizing rules, and of promoting flexibility. This rule has been deemed a ''significant regulatory action'' by the Office and Information and Regulatory Affairs under Executive Order 12866.

This rule moves the export regulation of certain capacitors from the ITAR to the EAR. This action reduces the regulatory burden on those who export, temporarily import, retransfer, reexport, or perform brokering activities involving the subject capacitors. In particular, this action averts substantial regulatory burdens that would otherwise apply to supply chains that rely on the subject capacitors and commercial items into which the subject capacitors have been integrated or incorporated. As discussed in ITAR § 120.11(c), defense articles remain subject to the ITAR after

incorporation or integration into an item not described on the USML, unless otherwise provided in the ITAR. The Department assesses that continuing to subject these capacitors (which are used in a wide swath of everyday commercial items, including commercial aircraft and Wi-Fi equipment) to the ITAR is unnecessary and would have significant negative consequences for global commerce, including the grounding of civil aircraft and the disruption of supply chains.

In implementing this rule, the Department is also revising USML Category XI(c)(5) to clarify its structure and explain certain terms used therein to minimize the potential for uncertainty.

The Department assesses that the benefits of this rulemaking outweigh any costs, that modifying the USML in this manner is the most cost-effective method to achieve the Department's regulatory objectives on this matter, and that doing so will result in a net reduction of the burden on the regulated community.

Executive Order 12988

The Department of State has reviewed this rulemaking in light of sections 3(a) and 3(b)(2) of Executive Order 12988 to eliminate ambiguity, minimize litigation, establish clear legal standards, and reduce burden.

Executive Order 13175

The Department of State has determined that this rulemaking will not have tribal implications, will not impose substantial direct compliance costs on Indian tribal governments, and will not preempt tribal law. Accordingly, the requirements of Executive Order 13175 do not apply to this rulemaking.

Paperwork Reduction Act

This rulemaking does not impose or revise any information collections subject to 44 U.S.C. Chapter 35.

List of Subjects in 22 CFR Part 121

Arms and munitions, Classified information, Exports.

Accordingly, for the reasons set forth above, Title 22, Chapter I, Subchapter M, part 121 is amended as follows:

PART 121—THE UNITED STATES MUNITIONS LIST

■ 1. The authority citation for part 121 continues to read as follows:

Authority: 22 U.S.C. 2752, 2778, 2797; 22 U.S.C. 2651a; Sec. 1514, Pub. L. 105–261, 112 Stat. 2175; E.O. 13637, 78 FR 16129, 3 CFR, 2013 Comp., p. 223.

■ 2. In § 121.1, under Category XI, revise paragraph (c)(5) as follows:

§ 121.1 The United States Munitions List.

* * * * *

Category XI—Military Electronics

* * * * *

(c) * * *

(5) High-energy storage capacitors that:

(i) Are capable of operating at greater than one hundred twenty-five volts (125 V);

(ii) Have a repetition rate greater than or equal to six (6) discharges per minute;

(iii) Have a full energy life greater than or equal to 10,000 discharges at greater than 0.2 Amps per Joule peak current; and

(iv) Have any of the following:

(A) Volumetric energy density greater than or equal to 1.5 J/cc; or

(B) Mass energy density greater than or equal to 1.3 kJ/kg;

Note to paragraph (c)(5): *Volumetric energy density* is Energy per unit Volume. *Mass energy density* is Energy per unit Mass, sometimes referred to as *Gravimetric energy density* or *Specific energy. Energy* ($E = \frac{1}{2}CV^2$, where C is Capacitance and V is the Voltage rating) in these calculations must not be confused with useful energy or extractable energy.

* * * * *

The Under Secretary of State for Arms Control and International Security, Bonnie Jenkins, having reviewed and approved this document, is delegating the authority to electronically sign this document to Jae E. Shin, who is the Director of the Office of Defense Trade Controls Compliance within the Directorate of Defense Trade Controls, for purposes of publication in the **Federal Register**.

Jae E. Shin,

Director, Office of Defense Trade Controls Compliance, Department of State.

[FR Doc. 2023–08825 Filed 4–26–23; 8:45 am]

BILLING CODE 4710–25–P

DEPARTMENT OF THE TREASURY

Office of Foreign Assets Control

31 CFR Parts 560 and 588

Corrections in the Iranian Transactions and Sanctions Regulations and Western Balkans Stabilization Regulations

AGENCY: Office of Foreign Assets Control, Treasury.

ACTION: Final rule.

SUMMARY: The Department of the Treasury's Office of Foreign Assets Control (OFAC) is adopting a final rule to correct a typographical error in the Iranian Transactions and Sanctions Regulations and to correct two typographical errors and incorporate one general license in the Western Balkans Stabilization Regulations.

DATES: This rule is effective April 27, 2023.

FOR FURTHER INFORMATION CONTACT: OFAC: Assistant Director for Licensing, 202–622–2480; Assistant Director for Regulatory Affairs, 202–622–4855; or Assistant Director for Sanctions Compliance & Evaluation, 202–622–2490.

SUPPLEMENTARY INFORMATION:

Electronic Availability

This document and additional information concerning OFAC are available on OFAC's website: *www.treas.gov/ofac.*

Background

OFAC is amending the Iranian Transactions and Sanctions Regulations, 31 CFR part 560 (ITSR), to replace the word ''insure'' with the word ''ensure'' in § 560.528.

OFAC is amending the Western Balkans Stabilization Regulations, 31 CFR part 588 (WBSR), to correct cross references in §§ 588.307 and 588.405. On December 21, 2022, OFAC issued an amendment to the WBSR (87 FR 78484). This amendment added a general license for activities of nongovernmental organizations to the WBSR, but because the amendment contained an error in the amendatory instructions, the general license could not be incorporated. OFAC is now amending the WBSR to redesignate a second general license currently in § 588.512 as § 588.513, and to properly add the nongovernmental organizations general license in § 588.512.

Public Participation

Because the amendment of the ITSR and the WBSR involves a foreign affairs function, the provisions of E.O. 12866 of September 30, 1993, ''Regulatory Planning and Review'' (58 FR 51735, October 4, 1993), and the Administrative Procedure Act (5 U.S.C. 553) requiring notice of proposed rulemaking, opportunity for public participation, and delay in effective date are inapplicable. Because no notice of proposed rulemaking is required for this rule, the Regulatory Flexibility Act (5 U.S.C. 601–612) does not apply.

Paperwork Reduction Act

The collections of information related to the ITSR and the WBSR are contained in 31 CFR part 501 (the ''Reporting, Procedures and Penalties Regulations''). Pursuant to the Paperwork Reduction Act of 1995 (44 U.S.C. 3507), those collections of information have been approved by the Office of Management and Budget under control number 1505–0164. An agency may not conduct or sponsor, and a person is not required to respond to, a collection of information unless the collection of information displays a valid control number.

List of Subjects in 31 CFR Parts 560 and 588

Administrative practice and procedure, Banks, banking, Blocking of assets, Credit, Foreign trade, Penalties, Reporting and recordkeeping requirements, Sanctions, Securities, Services.

For the reasons set forth in the preamble, OFAC amends 31 CFR parts 560 and 588 as follows:

PART 560—IRANIAN TRANSACTIONS AND SANCTIONS REGULATIONS

■ 1. The authority citation for part 560 continues to read as follows:

Authority: 3 U.S.C. 301; 18 U.S.C. 2339B, 2332d; 22 U.S.C. 2349aa–9, 7201–7211, 8501–8551, 8701–8795; 31 U.S.C. 321(b); 50 U.S.C. 1601–1651, 1701–1706; Pub. L. 101–410, 104 Stat. 890, as amended (28 U.S.C. 2461 note); E.O. 12613, 52 FR 41940, 3 CFR, 1987 Comp., p. 256; E.O. 12957, 60 FR 14615, 3 CFR, 1995 Comp., p. 332; E.O. 12959, 60 FR 24757, 3 CFR, 1995 Comp., p. 356; E.O. 13059, 62 FR 44531, 3 CFR, 1997 Comp., p. 217; E.O. 13599, 77 FR 6659, 3 CFR, 2012 Comp., p. 215; E.O. 13846, 83 FR 38939, 3 CFR, 2018 Comp., p. 854.

Subpart E—Licenses, Authorizations, and Statements of Licensing Policy

§ 560.528 [Amended]

■ 2. In § 560.528, remove ''insure'' and add in its place ''ensure''.

PART 588—WESTERN BALKANS STABILIZATION REGULATIONS

■ 3. The authority citation for part 588 is revised to read as follows:

Authority: 3 U.S.C. 301; 31 U.S.C. 321(b); 50 U.S.C. 1601–1651, 1701–1706; 22 U.S.C. 287c; Pub. L. 101–410, 104 Stat. 890, as amended (28 U.S.C. 2461 note); E.O. 13219, 66 FR 34777, 3 CFR, 2001 Comp., p. 778; E.O. 13304, 68 FR 32315, 3 CFR, 2004 Comp., p. 229; E.O. 14033, 86 FR 43905, 3 CFR, 2022 Comp., p. 591.

Subpart B—General Definitions

§ 588.307 [Amended]

■ 4. In § 588.307, in the heading for Note 1 to § 588.306, remove ''§ 588.306'' and add in its place ''§ 588.307''.

Subpart D—Interpretations

§ 588.405 [Amended]

■ 5. In § 588.405, in Note 1 to § 588.405, remove ''§ 588.5507'' and add in its place ''§ 588.507''.

Subpart E—Licenses, Authorizations, and Statements of Licensing Policy

§ 588.512 [Redesignated as § 588.513]

■ 6. Redesignate § 588.512 as § 588.513.

■ 7. Add new § 588.512 to read as follows:

§ 588.512 Authorizing certain transactions in support of nongovernmental organizations' activities.

(a) Except as provided in paragraph (c) of this section, all transactions prohibited by this part that are ordinarily incident and necessary to the activities described in paragraph (b) of this section by a nongovernmental organization are authorized, provided that the nongovernmental organization is not a person whose property or interests in property are blocked pursuant to this part.

(b) The activities referenced in paragraph (a) of this section are non-commercial activities designed to directly benefit the civilian population that fall into one of the following categories:

(1) Activities to support humanitarian projects to meet basic human needs, including disaster, drought, or flood relief; food, nutrition, or medicine distribution; the provision of health services; assistance for vulnerable or displaced populations, including individuals with disabilities and the elderly; and environmental programs;

(2) Activities to support democracy building, including activities to support rule of law, citizen participation, government accountability and transparency, human rights and fundamental freedoms, access to information, and civil society development projects;

(3) Activities to support education, including combating illiteracy, increasing access to education, international exchanges, and assisting education reform projects;

(4) Activities to support non-commercial development projects directly benefiting civilians, including those related to health, food security, and water and sanitation;

(5) Activities to support environmental and natural resource protection, including the preservation and protection of threatened or endangered species, responsible and transparent management of natural resources, and the remediation of pollution or other environmental damage; and

(6) Activities to support disarmament, demobilization, and reintegration (DDR) programs and peacebuilding, conflict prevention, and conflict resolution programs.

(c) This section does not authorize funds transfers initiated or processed with knowledge or reason to know that the intended beneficiary of such transfers is a person blocked pursuant to this part, other than for the purpose of effecting the payment of taxes, fees, or import duties, or the purchase or receipt of permits, licenses, or public utility services.

(d) Specific licenses may be issued on a case-by-case basis to authorize nongovernmental or other entities to engage in other activities designed to directly benefit the civilian population, including support for the removal of landmines and economic development projects directly benefiting the civilian population.

Note 1 to § 588.512. This section does not relieve any person authorized thereunder from complying with any other applicable laws or regulations.

Andrea M. Gacki,

Director, Office of Foreign Assets Control.

[FR Doc. 2023–08870 Filed 4–26–23; 8:45 am]

BILLING CODE 4810–AL–P

DEPARTMENT OF DEFENSE

Office of the Secretary

32 CFR Part 199

[Docket ID: DOD–2019–HA–0056]

RIN 0720–AB73

TRICARE; Reimbursement of Ambulatory Surgery Centers and Outpatient Services Provided in Cancer and Children's Hospitals

Correction

In rule document 2023–06452, appearing on pages 19844–19856 in the issue of Tuesday, April 4, 2023, make the following correction:

On page 19844 in the third column, in the **DATES** section, ''180 October 1, 2023'' should read ''October 1, 2023''.

[FR Doc. C1–2023–06452 Filed 4–26–23; 8:45 am]

BILLING CODE 0099–10–P

DEPARTMENT OF HOMELAND SECURITY

Coast Guard

33 CFR Part 100

[Docket Number USCG–2023–0254]

RIN 1625–AA08

Special Local Regulation: Safety Zone, Monongahela River Mile Marker 89.8 to Mile Marker 90.8, Point Marion, PA

AGENCY: Coast Guard, DHS.

ACTION: Temporary final rule.

SUMMARY: The Coast Guard is establishing a temporary safety zone for the waters of the Monongahela River from mile marker 89.8 to mile marker 90.8. This action is necessary to provide for the safety of life on these navigable waters during a power boat race on May 27 and May 28, 2023. This rulemaking prohibits persons and vessels from being in the safety zone unless authorized by the Captain of the Port Pittsburgh or a designated representative.

DATES: This rule is effective from 8 a.m. on May 27, 2023, through 8 p.m. on May 28, 2023.

ADDRESSES: To view documents mentioned in this preamble as being available in the docket, go to *https://www.regulations.gov,* type USCG–2023–0254 in the search box and click ''Search.'' Next, in the Document Type column, select ''Supporting & Related Material.''

FOR FURTHER INFORMATION CONTACT: If you have questions on this rule, call or email LTJG Eyobe Mills, Marine Safety Unit Pittsburgh, U.S. Coast Guard, at telephone 412–221–0807, email *Eyobe.D.Mills@uscg.mil.*

SUPPLEMENTARY INFORMATION:

I. Table of Abbreviations

CFR Code of Federal Regulations
DHS Department of Homeland Security
FR Federal Register
NPRM Notice of proposed rulemaking
§ Section
U.S.C. United States Code

II. Background Information and Regulatory History

The Coast Guard is issuing this temporary rule without prior notice and opportunity to comment pursuant to authority under section 4(a) of the Administrative Procedure Act (APA) (5 U.S.C. 553(b)). This provision authorizes an agency to issue a rule without prior notice and opportunity to comment when the agency for good cause finds that those procedures are ''impracticable, unnecessary, or contrary to the public interest.'' Under 5 U.S.C. 553(b)(B), the Coast Guard finds that good cause exists for not publishing a notice of proposed rulemaking (NPRM) with respect to this rule because it is impracticable. We must establish this safety zone by May 27, 2023 and lack sufficient time to provide a reasonable comment period and then consider those comments before issuing this rule.

III. Legal Authority and Need for Rule

The Coast Guard is issuing this rule under authority in 46 U.S.C. 70034. The Captain of the Port Pittsburgh (COTP) has determined that potential hazards associated with the boat race starting on May 27, 2023, will be a safety concern for anyone on the Monongahela River within a mile marker 89.8 and 90.8. This rule is needed to protect personnel, vessels, and the marine environment in the navigable waters within the safety zone.

IV. Discussion of the Rule

This rule establishes a safety zone from 8 a.m. through 8 p.m. on May 27 and May 28, 2023. The safety zone will cover all navigable waters on Monongahela River, within mile marker 89.8 and 90.8. The duration of the zone is intended to protect personnel, vessels, and the marine environment in these navigable waters during a boat race.

No vessel or person is permitted to enter the safety zone without obtaining permission from the COTP or a designated representative. A designated representative is a commissioned, warrant, or petty officer of the U.S. Coast Guard (USCG) assigned to units under the operational control of the COTP. To seek permission to enter, contact the COTP or a designated representative via VHF–FM channel 13 or 16, or through Marine Safety Unit Pittsburgh at 412–221–0807. Persons and vessels permitted to enter the safety zone must comply with all lawful orders or directions issued by the COTP or designated representative. The COTP or a designated representative will inform the public of the effective period for the safety zone as well as any changes in the dates and times of enforcement through Local Notice to Mariners (LNMs), Broadcast Notices to Mariners (BNMs), and/or Marine Safety Information Bulletins (MSIBs), as appropriate.

V. Regulatory Analyses

We developed this rule after considering numerous statutes and Executive orders related to rulemaking. Below we summarize our analyses based on a number of these statutes and Executive orders, and we discuss First Amendment rights of protestors.

A. Regulatory Planning and Review

Executive Orders 12866 and 13563 direct agencies to assess the costs and benefits of available regulatory alternatives and, if regulation is necessary, to select regulatory approaches that maximize net benefits. This rule has not been designated a ''significant regulatory action,'' under Executive Order 12866. Accordingly, this rule has not been reviewed by the Office of Management and Budget (OMB).

This regulatory action determination is based on the size, location, and duration of the temporary safety zone. This safety zone impacts only a one-mile stretch of the Monongahela River for 12 hours a day starting May 27, 2023, at 8 a.m. until May 28, 2023, at 8 p.m. Vessel traffic will be informed about the safety zone through local notices to mariners. Moreover, the Coast Guard will issue LNMs, MSIBs, and/or BNMs via VHF–FM marine channel 13 or 16 about the zone and the rule allows vessels to seek permission from the COTP to transit the zone.

B. Impact on Small Entities

The Regulatory Flexibility Act of 1980, 5 U.S.C. 601–612, as amended, requires Federal agencies to consider the potential impact of regulations on small entities during rulemaking. The term ''small entities'' comprises small businesses, not-for-profit organizations that are independently owned and operated and are not dominant in their fields, and governmental jurisdictions with populations of less than 50,000. The Coast Guard certifies under 5 U.S.C. 605(b) that this rule will not have a significant economic impact on a substantial number of small entities.

While some owners or operators of vessels intending to transit the safety zone may be small entities, for the reasons stated in section V.A above, this rule will not have a significant economic impact on any vessel owner or operator.

Under section 213(a) of the Small Business Regulatory Enforcement Fairness Act of 1996 (Pub. L. 104–121), we want to assist small entities in understanding this rule. If the rule would affect your small business, organization, or governmental jurisdiction and you have questions concerning its provisions or options for compliance, please call or email the person listed in the **FOR FURTHER INFORMATION CONTACT** section.

Small businesses may send comments on the actions of Federal employees

who enforce, or otherwise determine compliance with, Federal regulations to the Small Business and Agriculture Regulatory Enforcement Ombudsman and the Regional Small Business Regulatory Fairness Boards. The Ombudsman evaluates these actions annually and rates each agency's responsiveness to small business. If you wish to comment on actions by employees of the Coast Guard, call 1–888–REG–FAIR (1–888–734–3247). The Coast Guard will not retaliate against small entities that question or complain about this rule or any policy or action of the Coast Guard.

C. Collection of Information

This rule will not call for a new collection of information under the Paperwork Reduction Act of 1995 (44 U.S.C. 3501–3520).

D. Federalism and Indian Tribal Governments

A rule has implications for federalism under Executive Order 13132, Federalism, if it has a substantial direct effect on the States, on the relationship between the National Government and the States, or on the distribution of power and responsibilities among the various levels of government. We have analyzed this rule under that Order and have determined that it is consistent with the fundamental federalism principles and preemption requirements described in Executive Order 13132.

Also, this rule does not have Tribal implications under Executive Order 13175, Consultation and Coordination with Indian Tribal Governments, because it does not have a substantial direct effect on one or more Indian Tribes, on the relationship between the Federal Government and Indian Tribes, or on the distribution of power and responsibilities between the Federal Government and Indian tribes.

E. Unfunded Mandates Reform Act

The Unfunded Mandates Reform Act of 1995 (2 U.S.C. 1531–1538) requires Federal agencies to assess the effects of their discretionary regulatory actions. In particular, the Act addresses actions that may result in the expenditure by a State, local, or tribal government, in the aggregate, or by the private sector of $100,000,000 (adjusted for inflation) or more in any one year. Though this rule will not result in such an expenditure, we do discuss the effects of this rule elsewhere in this preamble.

F. Environment

We have analyzed this rule under Department of Homeland Security Directive 023–01, Rev. 1, associated implementing instructions, and Environmental Planning COMDTINST 5090.1 (series), which guide the Coast Guard in complying with the National Environmental Policy Act of 1969 (42 U.S.C. 4321–4370f), and have determined that this action is one of a category of actions that do not individually or cumulatively have a significant effect on the human environment. This rule involves a safety zone that impacts only a one-mile stretch of the Monongahela River for 12 hours a day starting May 27, 2023, at 8 a.m. until May 28, 2023, at 8 p.m. It is categorically excluded from further review under paragraph L60(a) of Appendix A, Table 1 of DHS Instruction Manual 023–01–001–01, Rev. 1. A Record of Environmental Consideration supporting this determination is available in the docket. For instructions on locating the docket, see the **ADDRESSES** section of this preamble.

G. Protest Activities

The Coast Guard respects the First Amendment rights of protesters. Protesters are asked to call or email the person listed in the **FOR FURTHER INFORMATION CONTACT** section to coordinate protest activities so that your message can be received without jeopardizing the safety or security of people, places, or vessels.

List of Subjects in 33 CFR Part 100

Marine safety, Navigation (water), Reporting and recordkeeping requirements, Waterways.

For the reasons discussed in the preamble, the Coast Guard is amending 33 CFR part 100 as follows:

PART 100—SAFETY OF LIFE ON NAVIGABLE WATERS

■ 1. The authority citation for part 100 continues to read as follows:

Authority: 46 U.S.C. 70041; 33 CFR 1.05–1.

■ 2. Add § 100.T08–0254 to read as follows:

§ 100.T08–0254 2023 Powerboat National's Point Marion Regatta, Point Marion, Pennsylvania.

(a) *Regulated area.* The regulations in this section apply to the following area: All waters of the Monongahela River, from surface to bottom, between mile markers 89.8 to 90.8.

(b) *Definitions.* As used in this section—

Designated representative means a Coast Guard Patrol Commander, including a Coast Guard coxswain, petty officer, or other officer operating a Coast Guard vessel and a Federal, State, and local officer designated by or assisting the Captain of the Port Pittsburgh (COTP) in the enforcement of the regulations in this section.

Participant means all persons and vessels registered with the event sponsor as a participant in the race.

(c) *Regulations.* (1) All non-participants are prohibited from entering, transiting through, anchoring in, or remaining within the regulated area described in paragraph (a) of this section unless authorized by the Captain of the Port Pittsburgh or their designated representative.

(2) To seek permission to enter, contact the COTP or the COTP's representative by VHF Channel 13 or 16. Those in the regulated area must comply with all lawful orders or directions given to them by the COTP or the designated representative.

(3) The COTP will provide notice of the regulated area through advanced notice via broadcast notice to mariners and by on-scene designated representatives.

(d) *Enforcement periods.* This section will be subject to enforcement from 8 a.m. through 8 p.m. each day on May 27 and 28, 2023.

Eric J. Velez,

Commander, U.S. Coast Guard, Captain of the Port Marine Safety Unit Pittsburgh.

[FR Doc. 2023–08904 Filed 4–26–23; 8:45 am]

BILLING CODE 9110–04–P

DEPARTMENT OF HOMELAND SECURITY

Coast Guard

33 CFR Part 165

[Docket Number USCG–2022–0352]

RIN 1625–AA00

Safety Zone; Fairport Harbor, Fairport, OH

AGENCY: Coast Guard, DHS.

ACTION: Temporary final rule.

SUMMARY: The Coast Guard is establishing a temporary safety zone for all navigable waters of Fairport Harbor, OH. The safety zone is necessary and intended to protect personnel, vessels, and the marine environment from hazards created by shoaling in the area.

DATES: This rule is effective without actual notice from April 27, 2023 through August 19, 2023. For enforcement purposes, actual notice will be used from April 21, 2023, until April 27, 2023.

ADDRESSES: To view documents mentioned in this preamble as being

available in the docket, go to *https://www.regulations.gov,* type USCG–2022–0352 in the ''SEARCH'' box and click ''SEARCH.'' Next, in the Document Type column, select ''Supporting & Related Material.''

FOR FURTHER INFORMATION CONTACT: If you have questions on this rule, call or email LT Jared Stevens, Waterways Management Division, U.S. Coast Guard; telephone 216–937–0124, email *D09-SMB-MSUCleveland-WWM@uscg.mil.*

SUPPLEMENTARY INFORMATION:

I. Table of Abbreviations

CFR Code of Federal Regulations
DHS Department of Homeland Security
FR Federal Register
NPRM Notice of proposed rulemaking
§ Section
U.S.C. United States Code

II. Background Information and Regulatory History

The Coast Guard is issuing this temporary rule without prior notice and opportunity to comment pursuant to authority under section 4(a) of the Administrative Procedure Act (APA) (5 U.S.C. 553(b)). This provision authorizes an agency to issue a rule without prior notice and opportunity to comment when the agency for good cause finds that those procedures are ''impracticable, unnecessary, or contrary to the public interest.'' Under 5 U.S.C. 553(b)(B), the Coast Guard finds that good cause exists for not publishing a notice of proposed rulemaking (NPRM) with respect to this rule because the Coast Guard has learned that significant shoaling has developed in the vicinity of the navigational channel, and the nature and location of the shoaling presents an imminent hazard to navigation. The safety zone must be established as soon as possible for the safety of all personnel, vessels, and the marine environment; thus, it is impracticable to publish an NPRM.

Under 5 U.S.C. 553(d)(3), the Coast Guard finds that good cause exists for making this rule effective less than 30 days after publication in the **Federal Register**. Delaying the effective date of this rule would be impracticable because immediate action is needed in order to mitigate the safety hazards associated with the shoaling in Fairport Harbor.

III. Legal Authority and Need for Rule

The Coast Guard is issuing this rule under authority in 46 U.S.C. 70034 (previously 33 U.S.C. 1231), 46 U.S.C. 70051; 33 CFR 1.05–1, 6.04–1, 6.04–6, and 160.5; Department of Homeland Security Delegation No. 00170.1, Revision No. 01.3. The Captain of the Port (COTP) Buffalo has determined that the hazards associated with shoaling in Fairport Harbor, OH are a safety concern for all marine traffic. This rule is necessary to protect personnel, vessels, and the marine environment in the navigable waters within the safety zone until dredging can be completed in accordance with the U.S. Army Corps of Engineers' approved project depth for the federally maintained sections of the waterway.

IV. Discussion of the Rule

This rule establishes a safety zone for all federally maintained waters of Fairport Harbor, OH. The duration of the safety zone is intended to protect personnel, vessels, and the marine environment in these navigable waters while the federally maintained channel is dredged in accordance with the approved U.S. Army Corps of Engineers federal project depths. All vessels greater than 100 Gross Registered Tons shall not meet or pass another vessel while navigating within the safety zone.

The most recent U.S. Army Corps of Engineers project condition surveys and hydrological surveys can be found on their website: *https://www.lrb.usace.army.mil/Library/Maps-and-Charts/.*

V. Regulatory Analyses

We developed this rule after considering numerous statutes and Executive orders related to rulemaking. Below we summarize our analyses based on a number of these statutes and Executive orders, and we discuss First Amendment rights of protestors.

A. Regulatory Planning and Review

Executive Orders 12866 and 13563 direct agencies to assess the costs and benefits of available regulatory alternatives and, if regulation is necessary, to select regulatory approaches that maximize net benefits. This rule has not been designated a ''significant regulatory action,'' under Executive Order 12866. Accordingly, this rule has not been reviewed by the Office of Management and Budget (OMB).

This regulatory action determination is based on the size, location, and duration of the safety zone. Moreover, the Coast Guard will issue a Broadcast Notice to Mariners via VHF–FM marine channel 16 regarding the safety zone, and this regulatory action allows vessel traffic to transit within and around the safety zone under the conditions outlined in this rulemaking.

B. Impact on Small Entities

The Regulatory Flexibility Act of 1980, 5 U.S.C. 601–612, as amended, requires Federal agencies to consider the potential impact of regulations on small entities during rulemaking. The term ''small entities'' comprises small businesses, not-for-profit organizations that are independently owned and operated and are not dominant in their fields, and governmental jurisdictions with populations of less than 50,000. The Coast Guard certifies under 5 U.S.C. 605(b) that this rule will not have a significant economic impact on a substantial number of small entities.

While some owners or operators of vessels intending to transit the safety zone may be small entities, for the reasons stated in section V.A above, this rule will not have a significant economic impact on any vessel owner or operator.

Under section 213(a) of the Small Business Regulatory Enforcement Fairness Act of 1996 (Pub. L. 104–121), we want to assist small entities in understanding this rule. If the rule would affect your small business, organization, or governmental jurisdiction and you have questions concerning its provisions or options for compliance, please call or email the person listed in the **FOR FURTHER INFORMATION CONTACT** section.

Small businesses may send comments on the actions of Federal employees who enforce, or otherwise determine compliance with, Federal regulations to the Small Business and Agriculture Regulatory Enforcement Ombudsman and the Regional Small Business Regulatory Fairness Boards. The Ombudsman evaluates these actions annually and rates each agency's responsiveness to small business. If you wish to comment on actions by employees of the Coast Guard, call 1–888–REG–FAIR (1–888–734–3247). The Coast Guard will not retaliate against small entities that question or complain about this rule or any policy or action of the Coast Guard.

C. Collection of Information

This rule will not call for a new collection of information under the Paperwork Reduction Act of 1995 (44 U.S.C. 3501–3520).

D. Federalism and Indian Tribal Governments

A rule has implications for federalism under Executive Order 13132, Federalism, if it has a substantial direct effect on the States, on the relationship between the National Government and the States, or on the distribution of

power and responsibilities among the various levels of government. We have analyzed this rule under that Order and have determined that it is consistent with the fundamental federalism principles and preemption requirements described in Executive Order 13132.

Also, this rule does not have Tribal implications under Executive Order 13175, Consultation and Coordination with Indian Tribal Governments, because it does not have a substantial direct effect on one or more Indian Tribes, on the relationship between the Federal Government and Indian tribes, or on the distribution of power and responsibilities between the Federal Government and Indian Tribes.

E. Unfunded Mandates Reform Act

The Unfunded Mandates Reform Act of 1995 (2 U.S.C. 1531–1538) requires Federal agencies to assess the effects of their discretionary regulatory actions. In particular, the Act addresses actions that may result in the expenditure by a State, local, or tribal government, in the aggregate, or by the private sector of $100,000,000 (adjusted for inflation) or more in any one year. Though this rule will not result in such an expenditure, we do discuss the effects of this rule elsewhere in this preamble.

F. Environment

We have analyzed this rule under Department of Homeland Security Directive 023–01, Rev. 1, associated implementing instructions, and Environmental Planning COMDTINST 5090.1 (series), which guide the Coast Guard in complying with the National Environmental Policy Act of 1969(42 U.S.C. 4321–4370f), and have determined that this action is one of a category of actions that do not individually or cumulatively have a significant effect on the human environment. This rule involves a safety zone lasting approximately 120 days, or until cancelled. This rule requires all vessels greater than 100 Gross Registered Tons shall not meet or pass another vessel while navigating within the safety zone. It is categorically excluded from further review under paragraph L60(a) of Appendix A, Table 1 of DHS Instruction Manual 023–01–001–01, Rev. 1. A Record of Environmental Consideration supporting this determination is available in the docket. For instructions on locating the docket, see the **ADDRESSES** section of this preamble.

G. Protest Activities

The Coast Guard respects the First Amendment rights of protesters. Protesters are asked to call or email the person listed in the **FOR FURTHER INFORMATION CONTACT** section to coordinate protest activities so that your message can be received without jeopardizing the safety or security of people, places, or vessels.

List of Subjects in 33 CFR Part 165

Marine safety, Navigation (water), reporting and recordkeeping requirements, Waterways.

For the reasons discussed in the preamble, the Coast Guard amends 33 CFR part 165 as follows:

PART 165—SAFETY OF LIFE ON NAVIGABLE WATERS

■ 1. The authority citation for part 165 continues to read as follows:

Authority: 46 U.S.C. 70034,50 U.S.C. 191; 33 CFR 1.05–1, 6.04–1, 6.04–6, and 160.5; Department of Homeland Security Delegation No. 00170.1, Revision No. 1.3

■ 2. Add § 165.T–090352 to read as follows:

§ 165.T–090352 Fairport Harbor Shoaling, Fairport, OH.

(a) *Location.* The following area is a safety zone: all federally maintained waters within Fairport Harbor, OH.

(b) *Definitions. Official Patrol Vessel* means a Coast Guard Patrol Commander, including a Coast Guard coxswain, petty officer, or other officer operating a Coast Guard vessel and a Federal, State, and local officer designated by or assisting the COTP Buffalo in the enforcement of the regulations in this section.

(c) *Regulations.* (1) All vessels greater than 100 Gross Registered Tons shall not meet nor pass another vessel while navigating within the safety zone.

(2) The Coast Guard may patrol the safety zone under the direction of a designated Coast Guard Patrol Commander. The Patrol Commander may be contacted on Channel 16 VHF–FM (156.8 MHz) by the call sign ''PATCOM.''

(3) No vessel shall anchor, block, loiter, or impede the through transit of vessels in the regulated area during the effective dates and times, unless cleared by or through an official patrol vessel. The Patrol Commander may forbid and control the movement of all vessels in the regulated area. When hailed or signaled by an official patrol vessel, a vessel shall comply with the directions given. Failure to do so may result in expulsion from the area, citation for failure to comply, or both.

(4) Any vessel may anchor outside the regulated areas specified in this chapter, but may not anchor in, block, or loiter in a navigable channel.

(5) The Patrol Commander may terminate the operation of any vessel at any time it is deemed necessary for the protection of life or property.

(6) The Patrol Commander will terminate enforcement of the special regulations upon satisfactory completion of dredging operations in consultation with U.S. Army Corps of Engineers and the COTP Buffalo.

(d) *Enforcement Period.* This safety zone will be enforced for 120 days starting on April 21, 2023.

Dated: April 21, 2023.

S.M. Murray,

Commander, U.S. Coast Guard, Alternate Captain of the Port Buffalo.

[FR Doc. 2023–08947 Filed 4–26–23; 8:45 am]

BILLING CODE 9110–04–P

DEPARTMENT OF HOMELAND SECURITY

Coast Guard

33 CFR Part 165

[Docket Number USCG–2023–0314]

RIN 1625–AA00

Safety Zone; Cumberland River

AGENCY: Coast Guard, DHS.

ACTION: Temporary final rule.

SUMMARY: The Coast Guard is proposing to establish a temporary safety zone for certain waters of the Cumberland River. This action is necessary to provide for the safety of life on the navigable waters of the Cumberland River near Cadiz, KY. This rule would prohibit persons and vessels from entering the safety zone unless authorized by the Captain of the Port Sector Ohio Valley (COTP) or a designated representative.

DATES: This rule is effective from May 4, 2023, through May 7, 2023.

ADDRESSES: To view documents mentioned in this preamble as being available in the docket, go to *https://www.regulations.gov,* type USCG–2023–0314 in the search box and click ''Search.'' Next, in the Document Type column, select ''Supporting & Related Material.''

FOR FURTHER INFORMATION CONTACT: If you have questions on this rule, call or email MST1 Evan Dawson, U.S. Coast Guard Marine Safety Unit Paducah; telephone 270–442–1621 x 2113, email: *STL-SMB-MSUPaducah-WWM@uscg.mil.*

SUPPLEMENTARY INFORMATION:

I. Table of Abbreviations

CFR Code of Federal Regulations

CUMB Cumberland River
DHS Department of Homeland Security
FR Federal Register
NPRM Notice of proposed rulemaking
§ Section
U.S.C. United States Code
CUMB Cumberland River
MM Mile Marker

II. Background Information and Regulatory History

The Coast Guard is issuing this temporary rule without prior notice and opportunity to comment pursuant to authority under section 4(a) of the Administrative Procedure Act (APA) (5 U.S.C. 553(b)). This provision authorizes an agency to issue a rule without prior notice and opportunity to comment when the agency for good cause finds that those procedures are ''impracticable, unnecessary, or contrary to the public interest.'' Under 5 U.S.C. 553(b)(B), the Coast Guard finds that good cause exists for not publishing a notice of proposed rulemaking (NPRM) with respect to this rule because it is impracticable. This safety zone must be established by May 4, 2023 and there is a lack of sufficient time to provide a reasonable comment period and then consider those comments before issuing the rule.

Under 5 U.S.C. 553(d)(3), the Coast Guard finds that good cause exists for making this rule effective less than 30 days after publication in the **Federal Register**. Delaying the effective date of this rule would be contrary to the public interest because immediate action is needed to respond to the potential safety hazards associated with a jet ski race.

III. Legal Authority and Need for Rule

The Coast Guard is issuing this rule under authority in 46 U.S.C. 70034. The Captain of the Port (COTP) Sector Ohio Valley has determined that potential hazards associated with the large gathering of small craft vessels on to the Cumberland River (CUMB) MM 55 exists. This rule is needed to protect personnel, vessels, and the marine environment in the navigable waters within the safety zone while the event is occurring.

IV. Discussion of the Rule

The COTP is establishing a safety zone from 6 a.m. May 4, 2023, to 5 p.m. on May 7, 2023. The safety zone would cover all navigable waters within two hundred fifty feet of the racecourse at any point of the event. The duration of the zone is intended to ensure the safety of vessels and persons during the event. No vessel or person would be permitted to enter the safety zone without obtaining permission from the COTP or a designated representative.

V. Regulatory Analyses

We developed this rule after considering numerous statutes and Executive orders related to rulemaking. Below we summarize our analyses based on a number of these statutes and Executive orders, and we discuss First Amendment rights of protestors.

A. Regulatory Planning and Review

Executive Orders 12866 and 13563 direct agencies to assess the costs and benefits of available regulatory alternatives and, if regulation is necessary, to select regulatory approaches that maximize net benefits. This rule has not been designated a ''significant regulatory action,'' under Executive Order 12866. Accordingly, this rule has not been reviewed by the Office of Management and Budget (OMB).

This regulatory action determination is based on the size, location, duration, and time-of-day of the safety zone. The Marine Event will be within a protected cove not utilized for commercial traffic, causing minimal disruption to vessel traffic. Moreover, the Coast Guard would issue a Broadcast Notice to Mariners via VHF–FM marine channel 22–A about the enforcement time of the zone, and the rule would allow vessels to seek permission to enter the zone.

B. Impact on Small Entities

The Regulatory Flexibility Act of 1980, 5 U.S.C. 601–612, as amended, requires Federal agencies to consider the potential impact of regulations on small entities during rulemaking. The term ''small entities'' comprises small businesses, not-for-profit organizations that are independently owned and operated and are not dominant in their fields, and governmental jurisdictions with populations of less than 50,000. The Coast Guard certifies under 5 U.S.C. 605(b) that this rule will not have a significant economic impact on a substantial number of small entities.

While some owners or operators of vessels intending to transit the safety zone may be small entities, for the reasons stated in section V.A above, this rule will not have a significant economic impact on any vessel owner or operator.

Under section 213(a) of the Small Business Regulatory Enforcement Fairness Act of 1996 (Pub. L. 104–121), we want to assist small entities in understanding this rule. If the rule would affect your small business, organization, or governmental jurisdiction and you have questions concerning its provisions or options for compliance, please call or email the person listed in the **FOR FURTHER INFORMATION CONTACT** section.

Small businesses may send comments on the actions of Federal employees who enforce, or otherwise determine compliance with, Federal regulations to the Small Business and Agriculture Regulatory Enforcement Ombudsman and the Regional Small Business Regulatory Fairness Boards. The Ombudsman evaluates these actions annually and rates each agency's responsiveness to small business. If you wish to comment on actions by employees of the Coast Guard, call 1–888–REG–FAIR (1–888–734–3247). The Coast Guard will not retaliate against small entities that question or complain about this rule or any policy or action of the Coast Guard.

C. Collection of Information

This rule will not call for a new collection of information under the Paperwork Reduction Act of 1995 (44 U.S.C. 3501–3520).

D. Federalism and Indian Tribal Governments

A rule has implications for federalism under Executive Order 13132, Federalism, if it has a substantial direct effect on the States, on the relationship between the National Government and the States, or on the distribution of power and responsibilities among the various levels of government. We have analyzed this rule under that Order and have determined that it is consistent with the fundamental federalism principles and preemption requirements described in Executive Order 13132.

Also, this rule does not have Tribal implications under Executive Order 13175, Consultation and Coordination with Indian Tribal Governments, because it does not have a substantial direct effect on one or more Indian tribes, on the relationship between the Federal Government and Indian Tribes, or on the distribution of power and responsibilities between the Federal Government and Indian Tribes.

E. Unfunded Mandates Reform Act

The Unfunded Mandates Reform Act of 1995 (2 U.S.C. 1531–1538) requires Federal agencies to assess the effects of their discretionary regulatory actions. In particular, the Act addresses actions that may result in the expenditure by a State, local, or Tribal government, in the aggregate, or by the private sector of $100,000,000 (adjusted for inflation) or more in any one year. Though this rule will not result in such an expenditure,

we do discuss the effects of this rule elsewhere in this preamble.

F. Environment

We have analyzed this rule under Department of Homeland Security Directive 023–01, Rev. 1, associated implementing instructions, and Environmental Planning COMDTINST 5090.1 (series), which guide the Coast Guard in complying with the National Environmental Policy Act of 1969 (42 U.S.C. 4321–4370f), and have determined that this action is one of a category of actions that do not individually or cumulatively have a significant effect on the human environment. This rule involves a safety zone lasting 96 hours that would prohibit entry within two hundred fifty feet of the event which is inside of a protected cove. Normally such actions are categorically excluded from further review under paragraph L60(a) of Appendix A, Table 1 of DHS Instruction Manual 023–01–001–01, Rev. 1. A Record of Environmental Consideration supporting this determination is available in the docket. For instructions on locating the docket, see the **ADDRESSES** section of this preamble.

G. Protest Activities

The Coast Guard respects the First Amendment rights of protesters. Protesters are asked to call or email the person listed in the **FOR FURTHER INFORMATION CONTACT** section to coordinate protest activities so that your message can be received without jeopardizing the safety or security of people, places or vessels.

List of Subjects in 33 CFR Part 165

Harbors, Marine safety, Navigation (water), Reporting and recordkeeping requirements, Security measures, Waterways.

For the reasons discussed in the preamble, the Coast Guard amends 33 CFR part 165 as follows:

PART 165 REGULATED NAVIGATION AREAS AND LIMITED ACCESS AREAS

■ 1. The authority citation for part 165 continues to read as follows:

Authority: 46 U.S.C. 70034, 70051, 70124; 33 CFR 1.05–1, 6.04–1, 6.04–6, and 160.5; Department of Homeland Security Delegation No. 00170.1, Revision No. 01.3.

■ 2. Add § 165.T08–0314 to read as follows:

§ 165.T08–0314 Safety Zone; Cumberland River; Cadiz, Kentucky.

(a) *Location.* The safety zone will cover all waters on the Cumberland River within two hundred fifty feet of the marine event, near Cadiz, KY, during daylight race activities drawing a line from 36°54′43.5″ N 87°59′09.6″ W north west to 36°54′44.9″ N 87°59′12.0″ W, continuing north east to 36°54′53.5″ N 87°59′04.1″ W, and ending at 36°54′47.1″ N 87°58′53.0″ W.

(b) *Effective period.* This rule will be effective from 6 a.m. on May 4, 2023 to 5 p.m. on May 7, 2023.

(c) *Enforcement period.* This section will be subject to enforcment from 6 a.m. on May 4, 2023, and will continue through 5 p.m. on May 7, 2023, or until the hazards associated with the Midamerica Watercross Championship Race, near Cadiz, KY, have been completed. If there is inclement weather or other disruptions the U.S. Coast Guard will inform mariners of the change in enforcement period via Broadcast Notice to Mariners on VHF–FM channel 16 and on-scene notice.

(d) *Regulations.* (1) In accordance with the general regulations in § 165.23, entry of vessels or persons into the zone during transit operations is prohibited unless specifically authorized by the Captain of the Port Sector Ohio Valley (COTP) or designated representative. A designated representative is a commissioned, warrant, or petty officer of the U.S. Coast Guard assigned to units under the operational control of USCG Sector Ohio Valley or a designated Coast Guard Auxiliary unit.

(2) If permission is granted, all persons and vessels must comply with the instructions of the COTP or designated representative.

Dated: April 21, 2023.

H.R. Mattern,

Captain, U.S. Coast Guard, Captain of the Port Sector Ohio Valley.

[FR Doc. 2023–08905 Filed 4–26–23; 8:45 am]

BILLING CODE 9110–04–P

ENVIRONMENTAL PROTECTION AGENCY

40 CFR Part 52

[EPA–R05–OAR–2022–0295; FRL–10162–04–R5]

Air Plan Approval; Michigan; Revisions to Part 1 and 2 Rules

AGENCY: Environmental Protection Agency (EPA).

ACTION: Final rule.

SUMMARY: The Environmental Protection Agency (EPA) is approving revisions to Michigan Air Pollution Control Rules Part 1 Definitions, and Part 2 Air Use Approval for inclusion in the Michigan State Implementation Plan (SIP). Additionally, EPA is removing rules from the SIP that are part of Michigan's title V Renewable Operating Permit program, and rules that have been moved to other sections of the Michigan Administrative Code and approved into the Michigan SIP.

DATES: This final rule is effective on May 30, 2023.

ADDRESSES: EPA has established a docket for this action under Docket ID No. EPA–R05–OAR–2022–0295. All documents in the docket are listed on the *www.regulations.gov* website. Although listed in the index, some information is not publicly available, *i.e.,* Confidential Business Information (CBI) or other information whose disclosure is restricted by statute. Certain other material, such as copyrighted material, is not placed on the internet and will be publicly available only in hard copy form. Publicly available docket materials are available either through *www.regulations.gov* or at the Environmental Protection Agency, Region 5, Air and Radiation Division, 77 West Jackson Boulevard, Chicago, Illinois 60604. This facility is open from 8:30 a.m. to 4:30 p.m., Monday through Friday, excluding Federal holidays and facility closures due to COVID–19. We recommend that you telephone Constantine Blathras at (312) 886–0671 before visiting the Region 5 office.

FOR FURTHER INFORMATION CONTACT: Constantine Blathras, Environmental Engineer, Air Permits Section, Air Programs Branch (AR18J), Environmental Protection Agency, Region 5, 77 West Jackson Boulevard, Chicago, Illinois 60604, (312) 886–0671, *Blathras.constantine@epa.gov.*

SUPPLEMENTARY INFORMATION: Throughout this document whenever ''we,'' ''us,'' or ''our'' is used, we mean EPA.

I. Background

On September 27, 2022, EPA proposed approval via a direct final rulemaking (87 FR 58471) of the Michigan SIP revisions submitted on March 8, 2022. During the public comment period, EPA received an adverse comment on the Michigan rule revisions to R 336.1285 ''Permit to install exemptions; miscellaneous'' and R 336.1291, ''Permit to install exemptions; emission units with ''de minimis'' emissions'', which included two new exemptions from the permitting for small sources. On November 14, 2022 (87 FR 68634), EPA withdrew the direct final rule. EPA is approving the following revisions to the Michigan rule revision which did not

receive adverse comment. We do not consider the comments received to be germane or relevant to EPA's proposal to approve Michigan's Part 1 and Part 2 rules as described below, and therefore not adverse to this action. EPA will respond to the comments received on R 336.1285 and R 336.1291 and take further action on that portion of the Michigan SIP revision at a later date.

EPA is approving revisions to Michigan's Part 1. Definitions, and Part 2. Air Use Approval for inclusion in the Michigan SIP. The following Michigan Air Pollution Control Rules are being added or revised: R 336.1101(q), R 336.1103(aa), R 336.1201a, R 336.1202–1203, R 336.1206–1207, R 336.1209, R 336.1214a, R 336.1219(1), R 336.1240–1241, R 336.1278.

The Part 1 definition revisions include new or revised definitions for the following, R 336.1101(q) ''Aqueous based parts washer'', and R 336.1103(aa) ''cold cleaner''.

The Part 2 modifications consist of wording changes made to help clarify the air use approval rules, and to update references and terminology. EPA is not approving at this time the two new exemptions from the permitting program for small sources found in R 336.1285 and R 336.1291. EPA will address the comments received on rules R 336.1285 and R 336.1291 at a later date.

EPA is removing the Michigan Air Pollution Control Rules R 336.1212 ''Administratively complete applications; insignificant activities; streamlining applicable requirements; emissions reporting and fee calculations'', R 336.1216 ''Modifications to renewable operating permits'', R 336.1219(2) ''Amendments for change of ownership or operational control'', R 336.1220 (rescinded), and R 336.1299 (rescinded) from the Michigan SIP.

The rescinded rules have been moved to other sections in the Michigan Administrative Code where they have already been approved into the Michigan SIP and rescinded from the original Part 2 location. This action completes the transition process for these rescinded rules.

The other Part 2 rules removed from the Michigan SIP by this action do not address the requirements related to attainment and maintenance of the National Ambient Air Quality Standards (NAAQS) under section 110 of the Clean Air Act (CAA). EPA has determined that these rules were erroneously incorporated into the SIP. These rules instead address the requirements under title V of the CAA for operating permit programs. EPA fully approved Michigan's title V Renewable Operating Permit Program on November 10, 2003 (68 FR 63735), to implement its program. Since these rules do not address the requirements related to attainment and maintenance of the NAAQS under Section 110 of the CAA and have been approved as part of the title V program approval, EPA will remove them from this section of the Michigan SIP.

EPA proposed to rescind rule R 336.1220 in a February 6, 2013 (78 FR 8485), action (in addition to approval of revisions to Michigan rules in Parts 1 and 19). EPA did not receive any comments on that proposal and published a final action on December 16, 2013 (78 FR 76064).

As part of the SIP revision request, Michigan submitted a 110(l) demonstration for each of the proposed revisions to the SIP. Section 110(l) of the CAA governs the submittal of SIP revisions as part of Attachment E of its submittal. It states that each revision to an implementation plan submitted by a State under this chapter shall be adopted by such State after reasonable notice and public hearing. The Administrator shall not approve a revision of a plan if the revision would interfere with any applicable requirement concerning the attainment and reasonable further progress (as defined by 7501 of the title), or any other applicable requirement of the chapter. The 110(l) demonstration in the SIP revision request adequately addresses this requirement for each rule revision being approved in this action, and the revisions should cause minimal to no impact on the emissions of any source, will have no effect on Michigan's NAAQS attainment status, or any backsliding on achieved improvements. The revision for the removed and rescinded rules pertain to the Michigan title V renewable operating permit program which has already been approved.

II. What action is EPA taking?

EPA is approving revisions to Michigan's Part 1 and Part 2 regulations. Specifically, EPA is approving revisions to Michigan Air Pollution Control Rules R 336.1101, R 336.1103, R 336.1201a, R 336.1202, R 336.1203, R 336.1206, R 336.1207, R 336.1209, R 336.1214a, R 336.1219, R 336.1240, R 336.1241, R 336.1278, effective December 20, 2016. EPA is also removing Michigan Air Pollution Control Rules R 336.1212, R 336.1216, and R 336.1299 from the SIP.

III. Incorporation by Reference

In this rule, EPA is finalizing regulatory text that includes incorporation by reference. In accordance with requirements of 1 CFR 51.5, EPA is finalizing the incorporation by reference of the Michigan Regulations described in Section I of this preamble and set forth in the amendments to 40 CFR part 52 below. EPA has made, and will continue to make, these documents generally available through *www.regulations.gov* and at the EPA Region 5 Office (please contact the person identified in the **FOR FURTHER INFORMATION CONTACT** section of this preamble for more information). Therefore, these materials have been approved by EPA for inclusion in the SIP, have been incorporated by reference by EPA into that plan, are fully federally enforceable under sections 110 and 113 of the CAA as of the effective date of the final rulemaking of EPA's approval, and will be incorporated by reference in the next update to the SIP compilation.[1]

Also in this document, as described in Section I of this preamble and the proposed amendments to 40 CFR part 52 set forth below, EPA is proposing to remove provisions of the EPA-Approved Michigan Regulations from the Michigan SIP, which is incorporated by reference in accordance with the requirements of 1 CFR part 51.

IV. Statutory and Executive Order Reviews

Under the CAA, the Administrator is required to approve a SIP submission that complies with the provisions of the CAA and applicable Federal regulations. 42 U.S.C. 7410(k); 40 CFR 52.02(a). Thus, in reviewing SIP submissions, EPA's role is to approve state choices, provided that they meet the criteria of the CAA. Accordingly, this action merely approves state law as meeting Federal requirements and does not impose additional requirements beyond those imposed by state law. For that reason, this action:

- Is not a significant regulatory action subject to review by the Office of Management and Budget under Executive Orders 12866 (58 FR 51735, October 4, 1993) and 13563 (76 FR 3821, January 21, 2011);
- Does not impose an information collection burden under the provisions of the Paperwork Reduction Act (44 U.S.C. 3501 *et seq.*);
- Is certified as not having a significant economic impact on a substantial number of small entities under the Regulatory Flexibility Act (5 U.S.C. 601 *et seq.*);
- Does not contain any unfunded mandate or significantly or uniquely

[1] 62 FR 27968 (May 22, 1997).

affect small governments, as described in the Unfunded Mandates Reform Act of 1995 (Pub. L. 104–4);

• Does not have federalism implications as specified in Executive Order 13132 (64 FR 43255, August 10, 1999);

• Is not an economically significant regulatory action based on health or safety risks subject to Executive Order 13045 (62 FR 19885, April 23, 1997);

• Is not a significant regulatory action subject to Executive Order 13211 (66 FR 28355, May 22, 2001);

• Is not subject to requirements of Section 12(d) of the National Technology Transfer and Advancement Act of 1995 (15 U.S.C. 272 note) because application of those requirements would be inconsistent with the CAA; and

• Does not provide EPA with the discretionary authority to address, as appropriate, disproportionate human health or environmental effects, using practicable and legally permissible methods, under Executive Order 12898 (59 FR 7629, February 16, 1994).

In addition, the SIP is not approved to apply on any Indian reservation land or in any other area where EPA or an Indian tribe has demonstrated that a tribe has jurisdiction. In those areas of Indian country, the rule does not have tribal implications and will not impose substantial direct costs on tribal governments or preempt tribal law as specified by Executive Order 13175 (65 FR 67249, November 9, 2000).

This action is subject to the Congressional Review Act, and EPA will submit a rule report to each House of the Congress and to the Comptroller General of the United States. This action is not a ''major rule'' as defined by 5 U.S.C. 804(2).

Under section 307(b)(1) of the CAA, petitions for judicial review of this action must be filed in the United States Court of Appeals for the appropriate circuit by June 26, 2023. Filing a petition for reconsideration by the Administrator of this final rule does not affect the finality of this action for the purposes of judicial review nor does it extend the time within which a petition for judicial review may be filed, and shall not postpone the effectiveness of such rule or action. This action may not be challenged later in proceedings to enforce its requirements. (See section 307(b)(2).)

List of Subjects in 40 CFR Part 52

Environmental protection, Air pollution control, Carbon monoxide, Incorporation by reference, Lead, Nitrogen dioxide, Ozone, Particulate matter, Reporting and recordkeeping requirements, Sulfur oxides, Volatile organic compounds.

Dated: April 17, 2023.

Debra Shore,

Regional Administrator, Region 5.

For the reasons stated in the preamble, 40 CFR part 52 is amended as follows:

PART 52—APPROVAL AND PROMULGATION OF IMPLEMENTATION PLANS

■ 1. The authority citation for part 52 continues to read as follows:

Authority: 42 U.S.C. 7401 *et seq.*

■ 2. In § 52.1170, the table in paragraph (c) is amended:

■ a. Under ''Part 1. General Provisions'' by revising the entries for R 336.1101 and R 336.1103; and

■ b. Under ''Part 2. Air Use Approval'' by:

■ i. Revising the entries for R 336.1201a, R 336.1202, R 336.1203, R 336.1206, R 336.1207, and R 336.1209;

■ ii. Removing the entry for R 336.1212;

■ iii. Adding the entry for R 336.1214a in numerical order;

■ iv. Removing the entry for R 336.1216;

■ v. Revising the entries for R 336.1219, R 336.1240, R 336.1241, and R 336.1278; and

■ vi. Removing the entry for R 336.1299.

The revisions and additions read as follows:

§ 52.1170 Identification of plan.

* * * * *

(c) * * *

EPA-APPROVED MICHIGAN REGULATIONS

Michigan citation	Title	State effective date	EPA approval date	Comments
*	*	*	*	*
Part 1. General Provisions				
R 336.1101	Definitions; A	12/20/2016	4/27/2023, [INSERT **FEDERAL REGISTER** CITATION].	All except for (a) Act and (h) Air pollution.
*	*	*	*	*
R 336.1103	Definitions; C	12/20/2016	4/27/2023, [INSERT **FEDERAL REGISTER** CITATION].	
*	*	*	*	*
Part 2. Air Use Approval				
*	*	*	*	*
R 336.1201a	General permits to install	12/20/2016	4/27/2023, [INSERT **FEDERAL REGISTER** CITATION].	
R 336.1202	Waivers of approval	12/20/2016	4/27/2023, [INSERT **FEDERAL REGISTER** CITATION].	
R 336.1203	Information required	12/20/2016	4/27/2023, [INSERT **FEDERAL REGISTER** CITATION].	

EPA-APPROVED MICHIGAN REGULATIONS—Continued

Michigan citation	Title	State effective date	EPA approval date	Comments
*	*	*	*	*
R 336.1206	Processing of applications for permits to install.	12/20/2016	4/27/2023, [INSERT **FEDERAL REGISTER** CITATION].	
R 336.1207	Denial of permits to install	12/20/2016	4/27/2023, [INSERT **FEDERAL REGISTER** CITATION].	
R 336.1209	Use of old permits to limit potential to emit.	12/20/2016	4/27/2023, [INSERT **FEDERAL REGISTER** CITATION].	
R 336.1214a ...	Consolidation of permits to install within renewable operating permit.	12/20/2016	4/27/2023, [INSERT **FEDERAL REGISTER** CITATION].	
R 336.1219	Amendments for change of ownership or operational control.	12/20/2016	4/27/2023, [INSERT **FEDERAL REGISTER** CITATION].	
R 336.1240	Required air quality models	12/20/2016	4/27/2023, [INSERT **FEDERAL REGISTER** CITATION].	
R 336.1241	Air quality modeling demonstration requirements.	12/20/2016	4/27/2023, [INSERT **FEDERAL REGISTER** CITATION].	
R 336.1278	Exclusion from exemption	12/20/2016	4/27/2023, [INSERT **FEDERAL REGISTER** CITATION].	
*	*	*	*	*

* * * * *

[FR Doc. 2023–08485 Filed 4–26–23; 8:45 am]

BILLING CODE 6560–50–P

ENVIRONMENTAL PROTECTION AGENCY

40 CFR Part 180

[EPA–HQ–OPP–2021–0310 and EPA–HQ–OPP–2021–0529; FRL–10884–01–OCSPP]

Fluazifop-P-butyl; Pesticide Tolerances

AGENCY: Environmental Protection Agency (EPA).

ACTION: Final rule.

SUMMARY: This regulation establishes tolerances for residues of fluazifop-P-butyl in or on multiple commodities which are identified and discussed later in this document. The Interregional Research Project Number 4 (IR–4) and Syngenta Crop Protection, LLC requested these tolerances under the Federal Food, Drug, and Cosmetic Act (FFDCA).

DATES: This regulation is effective April 27, 2023. Objections and requests for hearings must be received on or before June 26, 2023 and must be filed in accordance with the instructions provided in 40 CFR part 178 (see also Unit I.C. of the **SUPPLEMENTARY INFORMATION**).

ADDRESSES: The dockets for this action, identified by docket identification (ID) numbers EPA–HQ–OPP–2021–0310 and EPA–HQ–OPP–2021–0529, are available at *https://www.regulations.gov* or at the Office of Pesticide Programs Regulatory Public Docket (OPP Docket) in the Environmental Protection Agency Docket Center (EPA/DC), West William Jefferson Clinton Bldg., Rm. 3334, 1301 Constitution Ave. NW, Washington, DC 20460–0001. The Public Reading Room is open from 8:30 a.m. to 4:30 p.m., Monday through Friday, excluding legal holidays. The telephone number for the Public Reading Room and the OPP Docket is (202) 566–1744. For the latest status information on EPA/DC services, docket access, visit *https://www.epa.gov/dockets.*

FOR FURTHER INFORMATION CONTACT: Charles Smith, Director, Registration Division (7505T), Office of Pesticide Programs, Environmental Protection Agency, 1200 Pennsylvania Ave. NW, Washington, DC 20460–0001; main telephone number: (202) 566–1030; email address: *RDFRNotices@epa.gov.*

SUPPLEMENTARY INFORMATION:

I. General Information

A. Does this action apply to me?

You may be potentially affected by this action if you are an agricultural producer, food manufacturer, or pesticide manufacturer. The following list of North American Industrial Classification System (NAICS) codes is not intended to be exhaustive, but rather provides a guide to help readers determine whether this document applies to them. Potentially affected entities may include:

- Crop production (NAICS code 111).
- Animal production (NAICS code 112).
- Food manufacturing (NAICS code 311).
- Pesticide manufacturing (NAICS code 32532).

B. How can I get electronic access to other related information?

You may access a frequently updated electronic version of EPA's tolerance regulations at 40 CFR part 180 through the Office of the Federal Register's e-CFR site at *https://www.ecfr.gov/current/title-40.*

C. How can I file an objection or hearing request?

Under FFDCA section 408(g), 21 U.S.C. 346a, any person may file an objection to any aspect of this regulation and may also request a hearing on those objections. You must file your objection or request a hearing on this regulation in accordance with the instructions provided in 40 CFR part 178. To ensure proper receipt by EPA, you must identify docket ID numbers EPA–HQ–OPP–2021–0310 and EPA–HQ–OPP–2021–0529 in the subject line on the first page of your submission. All objections and requests for a hearing must be in writing and must be received by the Hearing Clerk on or before June 26, 2023. Addresses for mail and hand delivery of objections and hearing requests are provided in 40 CFR 178.25(b).

In addition to filing an objection or hearing request with the Hearing Clerk as described in 40 CFR part 178, please submit a copy of the filing (excluding any Confidential Business Information (CBI)) for inclusion in the public docket. Information not marked confidential pursuant to 40 CFR part 2 may be disclosed publicly by EPA without prior

notice. Submit the non-CBI copy of your objection or hearing request, identified by docket ID numbers EPA–HQ–OPP–2021–0310 and EPA–HQ–OPP–2021–0529, by one of the following methods:

• *Federal eRulemaking Portal: https://www.regulations.gov.* Follow the online instructions for submitting comments. Do not submit electronically any information you consider to be CBI or other information whose disclosure is restricted by statute.

• *Mail:* OPP Docket, Environmental Protection Agency Docket Center (EPA/DC), (28221T), 1200 Pennsylvania Ave. NW, Washington, DC 20460–0001.

• *Hand Delivery:* To make special arrangements for hand delivery or delivery of boxed information, please follow the instructions at *https://www.epa.gov/dockets/where-send-comments-epa-dockets.*

Additional instructions on commenting or visiting the docket, along with more information about dockets generally, is available at *https://www.epa.gov/dockets.*

II. Summary of Petitioned-For Tolerance

In the **Federal Register** of August 24, 2021 (86 FR 47275) (FRL–8792–02–OCSPP), EPA issued a document pursuant to FFDCA section 408(d)(3), 21 U.S.C. 346a(d)(3), announcing the filing of a pesticide petition (PP1E8909) by IR–4, North Carolina State University, 1730 Varsity Drive, Venture IV, Suite 210, Raleigh, NC 27606. The petition requested that 40 CFR 180.411 be amended by establishing tolerances for residues of the herbicide fluazifop-P-butyl, butyl(R)-2-[4-[[5-(trifluoromethyl)-2-pyridinyl]oxy]phenoxy]propanoate, in or on berry, low growing, subgroup 13–07G at 3 parts per million (ppm); Brassica, leafy greens, subgroup 4–16B at 15 ppm; chive, dried leaves at 40 ppm; fruit, citrus, group 10–10 at 0.03 ppm; fruit, stone, group 12–12 at 0.05 ppm; leaf petiole vegetable subgroup 22B at 3 ppm; onion, green, subgroup 3–07B at 4 ppm; papaya at 0.01 ppm; and vegetable, brassica, head and stem, group 5–16 at 30 ppm. Upon the establishment of these tolerances, IR–4 requested that EPA remove the existing tolerances in 40 CFR 180.411 for residues of fluazifop-P-butyl in or on fruit, citrus, group 10 at 0.03 ppm; fruit, stone at 0.05 ppm; onion, green at 1.5 ppm; rhubarb at 0.50 ppm; and strawberry at 3.0 ppm. That document referenced a summary of the petition prepared by IR–4, the petitioner, which is available in the docket, *https://www.regulations.gov* in docket ID EPA–HQ–OPP–2021–0310. A comment was received on the notice of filing. EPA's response to the comment is discussed in Unit IV.C.

In the **Federal Register** of November 17, 2022 (87 FR 68959) (FRL–9410–07–OCSPP), EPA issued a document pursuant to FFDCA section 408(d)(3), 21 U.S.C. 346a(d)(3), announcing the filing of a pesticide petition (PP0F8890) by Syngenta Crop Protection, LLC, P.O. Box 18300, Greensboro, NC 27419. The petition requested that 40 CFR part 180 be amended by establishing tolerances for inadvertent residues of fluazifop-P-butyl metabolite 5-(Trifluoromethyl)-2-Pyridone (TFP) in or on the raw agricultural commodities corn forage at 0.01 ppm; corn grain at 0.01 ppm; and corn stover at 0.015 ppm. That document referenced a summary of the petition prepared by Syngenta Crop Protection, LLC, the registrant, which is available in the docket, *https://www.regulations.gov* in docket ID EPA–HQ–OPP–2021–0529. There were no comments received in response to the notice of filing.

Based upon review of the data supporting the petition, EPA has modified the levels at which tolerances are being established for some commodities and has adjusted the commodity definition for others. The reasons for these changes are explained in Unit IV.D.

III. Aggregate Risk Assessment and Determination of Safety

Section 408(b)(2)(A)(i) of FFDCA allows EPA to establish a tolerance (the legal limit for a pesticide chemical residue in or on a food) only if EPA determines that the tolerance is ''safe.'' Section 408(b)(2)(A)(ii) of FFDCA defines ''safe'' to mean that ''there is a reasonable certainty that no harm will result from aggregate exposure to the pesticide chemical residue, including all anticipated dietary exposures and all other exposures for which there is reliable information.'' This includes exposure through drinking water and in residential settings but does not include occupational exposure. Section 408(b)(2)(C) of FFDCA requires EPA to give special consideration to exposure of infants and children to the pesticide chemical residue in establishing a tolerance and to ''ensure that there is a reasonable certainty that no harm will result to infants and children from aggregate exposure to the pesticide chemical residue. . . .''

Consistent with FFDCA section 408(b)(2)(D), and the factors specified in FFDCA section 408(b)(2)(D), EPA has reviewed the available scientific data and other relevant information in support of this action. EPA has sufficient data to assess the hazards of and to make a determination on aggregate exposure for fluazifop-P-butyl including exposure resulting from the tolerances established by this action. EPA's assessment of exposures and risks associated with fluazifop-P-butyl follows.

In an effort to streamline its publications in the **Federal Register**, EPA is not reprinting sections that repeat what has been previously published for tolerance rulemaking of the same pesticide chemical. Where scientific information concerning a particular chemical remains unchanged, the content of those sections would not vary between tolerance rulemaking and republishing the same sections is unnecessary. EPA considers referral back to those sections as sufficient to provide an explanation of the information EPA considered in making its safety determination for the new rulemaking.

EPA has previously published a tolerance rulemaking for fluazifop-P-butyl in which EPA concluded, based on the available information, that there is a reasonable certainty that no harm results from aggregate exposure to fluazifop-P-butyl and established tolerances for residues of that chemical. EPA is incorporating previously published sections from this rulemaking as described further in this rulemaking, as they remain unchanged.

Toxicological profile. For a discussion of the Toxicological Profile of fluazifop-P-butyl, see Unit III.A. of the September 27, 2017, final rulemaking (82 FR 44936) (FRL–9966–67).

Toxicological points of departure/Levels of concern. For a summary of the Toxicological Points of Departure/Levels of Concern for fluazifop-P-butyl used for human risk assessment, please reference Unit III.B. of the September 27, 2017, final rulemaking. As explained in the Food Quality Protection Act (FQPA) safety factor section in this rule, the safety factor for inhalation exposure has decreased from 10X to 1X so the level of concern for short term inhalation exposures is now 100 rather than 1,000 like it was in 2017.

Exposure assessment. Much of the exposure assessment remains the same although updates have occurred to accommodate the exposures from the petitioned-for tolerances. These updates are discussed in this section; for a description of the rest of the EPA approach to and assumptions for the exposure assessment, please reference Unit III.C of the September 27, 2017, final rulemaking.

EPA's dietary exposure assessments have been updated to include the

additional exposure from the proposed new uses and indirect/inadvertent residues of fluazifop-P-butyl on the commodities identified in this action and were conducted using the Dietary Exposure Evaluation Model software using the Food Commodity Intake Database (DEEM–FCID) Version 4.02, which uses the 2005–2010 food consumption data from the United States Department of Agriculture's (USDA's) National Health and Nutrition Examination Survey, What We Eat in America (NHANES/WWEIA). The acute dietary exposure assessment assumed tolerance-level residues for plant commodities, anticipated residues for livestock commodities, 100 percent crop treated (PCT) and default processing factors. The chronic dietary exposure assessment was based on mean residue levels from crop field trials, average PCT estimates for registered uses of fluazifop-P-butyl, projected PCT estimates for proposed new uses on broccoli and cauliflower, and experimentally determined processing factors where available. For both the acute and chronic exposure assessments, the residues were adjusted to account for additional metabolites of concern.

Anticipated residue and percent crop treated (PCT) information. Section 408(b)(2)(E) of FFDCA authorizes EPA to use available data and information on the anticipated residue levels of pesticide residues in food and the actual levels of pesticide residues that have been measured in food. If EPA relies on such information, EPA must require, pursuant to FFDCA section 408(f)(1), that data be provided 5 years after the tolerance is established, modified, or left in effect, demonstrating that the levels in food are not above the levels anticipated. For the present action, EPA will issue such data call-ins as are required by FFDCA section 408(b)(2)(E) and authorized under FFDCA section 408(f)(1). Data will be required to be submitted no later than 5 years from the date of issuance of these tolerances.

Section 408(b)(2)(F) of FFDCA states that the Agency may use data on the actual percent of food treated for assessing chronic dietary risk only if:

- *Condition a:* The data used are reliable and provide a valid basis to show what percentage of the food derived from such crop is likely to contain the pesticide residue.
- *Condition b:* The exposure estimate does not underestimate exposure for any significant subpopulation group.
- *Condition c:* Data are available on pesticide use and food consumption in a particular area, and the exposure estimate does not understate exposure for the population in such area.

In addition, the Agency must provide for periodic evaluation of any estimates used. To provide for the periodic evaluation of the estimate of PCT as required by FFDCA section 408(b)(2)(F), EPA may require registrants to submit data on PCT.

The Agency estimated the PCT for existing uses as follows:

For the acute dietary analysis, 100% crop treated was assumed for all crops. The average percent crop treated estimates were used in the chronic dietary risk assessments for the following crops that are currently registered for fluazifop-P-butyl: apricots 1%; asparagus 1%; carrots 25%; cherries 1%; cotton 1%; dry beans/peas 1%; garlic 5%; grapefruit 5%; grapes 1%; lemons 1%; onions 10%; oranges 1%; peaches 2.5%; peanuts 1%; plums/prunes 1%; potatoes 1%, soybeans 2.5%; strawberries 1%; sugar beets 1%.

In most cases, EPA uses available data from United States Department of Agriculture/National Agricultural Statistics Service (USDA/NASS), proprietary market surveys, and California Department of Pesticide Regulation (CalDPR) Pesticide Use Reporting (PUR) for the chemical/crop combination for the most recent 10 years. EPA uses an average PCT for chronic dietary risk analysis and a maximum PCT for acute dietary risk analysis. The average PCT figure for each existing use is derived by combining available public and private market survey data for that use, averaging across all observations, and rounding to the nearest 5%, except for those situations in which the average PCT is less than 1% or less than 2.5%. In those cases, the Agency would use 1% or 2.5% as the average PCT value, respectively. The maximum PCT figure is the highest observed maximum value reported within the recent 10 years of available public and private market survey data for the existing use and rounded up to the nearest multiple of 5%, except where the maximum PCT is less than 2.5%, in which case, the Agency uses 2.5% as the maximum PCT.

In addition, projected PCT was used for the proposed uses on broccoli (30% PCT) and cauliflower (45% PCT); 100 PCT was assumed for the other proposed uses. EPA assumes the percent crop treated for a new use (PCTn) is unlikely to exceed that of the PCT of the dominant pesticide (*i.e.,* the one with the greatest PCT) used on that crop over the three most recent years of available data, which spans from 2016—2020. Comparisons are only made among pesticides of the same pesticide types (*e.g.,* the dominant insecticide on the crop is selected for comparison with a new insecticide). The PCTs included in the analysis may be for the same pesticide or for different pesticides since the same or different pesticides may dominate each year. Typically, EPA uses USDA/NASS as the source for raw PCT data because it is publicly available and does not have to be calculated from available data sources. When USDA/NASS does not survey a specific use site, EPA uses other appropriate public data or private market research to calculate the PCTn.

The average PCT of the market leader(s) is appropriate for use in the chronic dietary risk assessment because it represents exposure over time. This method of estimating a PCT for a new use of a registered pesticide or a new pesticide produces a high-end estimate that is unlikely, in most cases, to be exceeded during the initial five years of actual use. The predominant factors that bear on whether the estimated PCTn could be exceeded are (1) the extent of pest pressure on the crops in question; (2) the pest spectrum of the new pesticide in comparison with the market; and (3) resistance concerns with the market leaders. EPA has examined the relevant data and concludes that it is unlikely that the actual PCT with fluazifop-P-butyl on broccoli and cauliflower will exceed the PCTn within the next 5 years.

The Agency believes that the three conditions discussed in this section have been met. With respect to Condition a, PCT estimates are derived from Federal and private market survey data, which are reliable and have a valid basis. The Agency is reasonably certain that the percentage of the food treated is not likely to be an underestimation. As to Conditions b and c, regional consumption information and consumption information for significant subpopulations is taken into account through EPA's computer-based model for evaluating the exposure of significant subpopulations including several regional groups. Use of this consumption information in EPA's risk assessment process ensures that EPA's exposure estimate does not understate exposure for any significant subpopulation group and allows the Agency to be reasonably certain that no regional population is exposed to residue levels higher than those estimated by the Agency. Other than the data available through national food consumption surveys, EPA does not have available reliable information on the regional consumption of food to

which fluazifop-P-butyl may be applied in a particular area.

Dietary exposure from drinking water. The recommended estimated drinking water concentrations in the September 27, 2017, final rulemaking remain valid and are considered protective of potential drinking water residue levels anticipated from the proposed new uses.

Non-occupational exposure. The term ''residential exposure'' is used in this document to refer to non-occupational, non-dietary exposure (*e.g.,* for lawn and garden pest control, indoor pest control, termiticides, and flea and tick control on pets).

There are no new proposed residential uses. Fluazifop-P-butyl is currently registered for use on lawns/turf (including home lawns and golf courses) and ornamentals in residential settings that could result in residential exposures. For these currently registered uses of fluazifop-P-butyl, there are no residential (handler and post-application) risk estimates of concern. The residential exposure scenarios recommended for aggregate risk assessment of fluazifop-P-butyl are dermal and inhalation handler exposure from applications to gardens/trees using a backpack sprayer for adults and combined dermal plus hand-to-mouth post-application exposure from high-contact activities on treated turf for children 1 to less than 2 years old.

Cumulative effects from substances with a common mechanism of toxicity. Section 408(b)(2)(D)(v) of FFDCA requires that, when considering whether to establish, modify, or revoke a tolerance, the Agency consider ''available information'' concerning the cumulative effects of a particular pesticide's residues and ''other substances that have a common mechanism of toxicity.'' Unlike other pesticides for which EPA has followed a cumulative risk approach based on a common mechanism of toxicity, EPA has not made a common mechanism of toxicity finding as to fluazifop-P-butyl and any other substances, and fluazifop-P-butyl does not appear to produce a toxic metabolite produced by other substances. For the purposes of this tolerance action, therefore, EPA has not assumed that fluazifop-P-butyl has a common mechanism of toxicity with other substances.

Safety factor for infants and children. Section 408(b)(2)(C) of FFDCA provides that EPA shall apply an additional tenfold (10X) margin of safety for infants and children in the case of threshold effects to account for prenatal and postnatal toxicity and the completeness of the database on toxicity and exposure unless EPA determines based on reliable data that a different margin of safety will be safe for infants and children. This additional margin of safety is commonly referred to as the Food Quality Protection Act Safety Factor (FQPA SF). In applying this provision, EPA either retains the default value of 10X, or uses a different additional safety factor when reliable data available to EPA support the choice of a different factor.

Prenatal and postnatal sensitivity. Increased quantitative sensitivity of the fetus was observed in the rat developmental studies in which no maternal toxicity was observed. Developmental toxicity in the rat was generally related to incomplete and/or delayed ossification. At higher doses, decreased fetal body weight and an increased incidence of diaphragmatic hernia were observed. In the rabbit, maternal and developmental toxicity were observed at the same dose. Maternal toxicity included abortions, weight loss, and death, while fetal toxicity included abortions, skeletal effects, and fetuses that were small and/or had cloudy eyes. In the rat reproduction and fertility study, maternal toxicity (increased liver weight, bile duct hyperplasia, and geriatric nephropathy) and offspring toxicity (decreased pup viability, decreased pup body weight, and hydronephrosis) were observed at the same dose level, and decreased female fertility was observed at the highest dose.

Conclusion. The FQPA Safety Factor is being retained at 10X for the acute dietary assessment, as an uncertainty factor for lowest observed adverse effect level (LOAEL) to no observed adverse effect level (NOAEL) extrapolation (UF_L) due to lack of a NOAEL in the acute neurotoxicity study from which the risk assessment endpoint was chosen. For the remaining applicable exposure scenarios, EPA has determined that reliable data show the safety of infants and children would be adequately protected if the FQPA SF were reduced to 1X. That decision is based on the following findings:

- The toxicity database is adequate for characterizing pre- and postnatal risk for infants and children. The database includes five rat developmental toxicity studies, two rabbit developmental toxicity studies, a rat reproduction study, acute and subchronic neurotoxicity studies, a delayed neurotoxicity study, and an immunotoxicity study. EPA previously retained the 10X FQPA SF when assessing short-term inhalation exposures due to a lack of a subchronic inhalation study; however, EPA has determined that the subchronic inhalation study is no longer necessary to assess risk to infants and children because of the low potential for volatilization, the low acute inhalation toxicity of fluazifop, the fact that the respiratory system is not a target organ, and the fact that the use of the oral point of departure (POD) results in margins of exposure (MOEs) greater than 1,000 for all residential handler scenarios. Thus, the available data is sufficient to ensure that the 1X will be protective.
- The endpoints selected are protective of any potential neurotoxic effects.
- There was no indication of increased fetal or offspring susceptibility compared to maternal toxicity in the rabbit developmental or rat reproduction studies. Quantitative susceptibility of the fetus was noted in the rat developmental studies. However, the selected PODs are protective for these effects. Therefore, the degree of concern is low.
- There is no residual uncertainty in the exposure database for fluazifop-P-butyl with respect to dietary (food and water) and residential (turf and ornamental use) exposure. The dietary food exposure assessments include assumptions that result in high-end estimates of dietary food exposure. Also included in the assessments are modeled drinking water estimates that are designed to be protective of the highest potential residue levels in drinking water from among a range of exposure scenarios. In addition, the residential exposure assessment was conducted based on the conservative assumptions for assessing post-application exposure of children found in the Residential Standard Operating Procedures and chemical-specific data such that residential exposure and risk will not be underestimated.

Aggregate risks and determination of safety. EPA determines whether acute and chronic dietary pesticide exposures are safe by comparing dietary exposure estimates to the acute population adjusted dose (aPAD) and the chronic population adjusted dose (cPAD). Short-, intermediate-, and chronic term aggregate risks are evaluated by comparing the estimated total food, water, and residential exposure to the appropriate points of departure to ensure that an adequate MOE exists.

Acute dietary risks are below the Agency's level of concern of 100% of the aPAD; they are 38% of the aPAD for children 1 to 2 years old, the group with the highest exposure. Chronic dietary risks are below the Agency's level of concern of 100% of the cPAD; they are 66% of the cPAD for children 1 to 2

years old, the most highly exposed group. Fluazifop-P-butyl is currently registered for uses that could result in short-term residential exposure, and the Agency has determined that it is appropriate to aggregate chronic exposure through food and water with short-term residential exposures to fluazifop-P-butyl. The short-term aggregate MOE for adults is 200 and for children 1 to <2 years old is 480. These are greater than the level of concern of 100 and are not of concern. All residential exposures are anticipated to be short-term in duration; thus, an intermediate-term aggregate risk assessment is not required.

Fluazifop-P-butyl is classified as ''Not Likely to be Carcinogenic to Humans''; therefore, EPA does not expect fluazifop-P-butyl exposures to pose an aggregate cancer risk.

Therefore, based on the risk assessments and information described above, EPA concludes there is a reasonable certainty that no harm will result to the general population, or to infants and children, from aggregate exposure to fluazifop-P-butyl residues. More detailed information on this action can be found in the document ''Fluazifop-P-butyl. Human Health Risk Assessment for Proposed Uses and/or Tolerances on Brassica, leafy greens (subgroup 4–16B), Vegetable, Brassica, head and stem (group 5–16), Leaf petiole vegetable (subgroup 22B), Chive, dried leaves, and Papaya; Crop group expansions to Onion, green, subgroup 3–07B and Berry, low growing, subgroup 13–07G; Crop group conversions to Fruit, citrus, group 10–10 and Fruit, stone, group 12–12; and Rotational Field Corn'' in docket ID EPA–HQ–OPP–2021–0310 and EPA–HQ–OPP–2021–0529.

IV. Other Considerations

A. Analytical Enforcement Methodology

Adequate enforcement methodology (High Performance Liquid Chromatography/Ultra-Violet Spectrometry (HPLC/UV)) is available to enforce the tolerance expression for crops. In addition, method GRM044.09A, a liquid chromatography and tandem mass spectroscopy (LC/MS/MS) method, is available for the enforcement of 5-(Trifluoromethyl)-2-Pyridone (TFP) residues in/on rotational crops.

The method may be requested from: Chief, Analytical Chemistry Branch, Environmental Science Center, 701 Mapes Rd., Ft. Meade, MD 20755–5350; telephone number: (410) 305–2905; email address: *residuemethods@epa.gov.*

B. International Residue Limits

In making its tolerance decisions, EPA seeks to harmonize U.S. tolerances with international standards whenever possible, consistent with U.S. food safety standards and agricultural practices. EPA considers the international maximum residue limits (MRLs) established by the Codex Alimentarius Commission (Codex), as required by FFDCA section 408(b)(4). The tolerances for fruit, citrus, group 10–10 and fruit, stone, group 12–12 are being harmonized with the respective Codex MRLs at 0.01 ppm. No Codex MRLs have been established for residues of fluazifop-P-butyl in or on the other commodities in this rulemaking.

C. Response to Comments

One comment was received on the notice of filing, which opposed EPA establishing the requested tolerances and objected to the use of pesticides on crops. Although the Agency recognizes that some individuals believe that pesticides should be banned on agricultural crops, the existing legal framework provided by section 408 of the FFDCA authorizes EPA to establish tolerances when it determines that the tolerances are safe. Upon consideration of the validity, completeness, and reliability of the available data as well as other factors the FFDCA requires EPA to consider, EPA has determined that the fluazifop-P-butyl tolerances are safe. The commenter has provided no information indicating that a safety determination cannot be supported.

D. Revisions to Petitioned-For Tolerances

The tolerance levels for fruit, citrus, group 10–10 and fruit, stone, group 12–12 are being set at the method limit of quantitation (LOQ) of the analytical method, 0.01 ppm, to harmonize with the Codex MRLs for these crop groups. The Codex MRL for citrus and stone fruit is established at 0.01 ppm, reflecting the LOQ of the enforcement method and no detects in the field trial data. The established U.S. tolerances of 0.03 ppm for fruit, citrus, group 10 and 0.05 ppm for fruit, stone reflect the highest LOQ reported in the respective field trials. As sprays are directed to weeds at the base of the trees or vines, residue translocation into tree/vine fruit is not expected, and suitably sensitive analytical enforcement methods are available. Therefore, a tolerance of 0.01 ppm for groups 10–10 and 12–12 is not expected to lead to violative residues.

IR–4 requested a tolerance of 4 ppm for onion, green, subgroup 3–07B based partly on the established tolerance of 1.5 ppm for onion, green and field trial residue data on chives, fresh leaves that supports a tolerance of 4 ppm. Because green onion is the representative commodity for onion, green, subgroup 3–07B, EPA is establishing the tolerance for subgroup 3–07B at 1.5 ppm and is establishing a tolerance for chives, fresh leaves at 4 ppm based on the chives field trial residue data. In addition, EPA corrected the commodity definitions for the field corn commodities to reflect standard Agency terminology.

E. International Trade Considerations

In this rule, EPA is establishing tolerances for fluazifop-P-butyl residues in or on fruit, citrus, group 10–10 and fruit, stone, group 12–12 at 0.01 ppm that are lower than the current tolerances of 0.03 ppm for fruit, citrus, group 10 and 0.05 ppm for fruit, stone. For the reasons explained in Unit IV.D, the Agency believes these revised, lower tolerances are appropriate based on available residue data and analytical methods.

In accordance with the World Trade Organization's (WTO) Sanitary and Phytosanitary Measures (SPS) Agreement, EPA intends to notify the WTO of the changes to these tolerances in order to satisfy its obligations under the Agreement. In addition, the SPS Agreement requires that Members provide a ''reasonable interval'' between the publication of a regulation subject to the Agreement and its entry into force to allow time for producers in exporting Member countries to adapt to the new requirement. Accordingly, EPA is retaining the existing tolerances for citrus group 10 and stone fruit by establishing an expiration date for these at the existing tolerance levels of 0.03 ppm and 0.05 ppm, respectively, to allow these tolerances to remain in effect for a period of 6 months after the effective date of this final rule. After the 6-month period expires, the allowable residues on members of the citrus fruit group 10–10 and the stone fruit group 12–12 must conform to the new lower tolerance level of 0.01 ppm. This reduction in tolerance level is not discriminatory; the same food safety standard contained in the FFDCA applies equally to domestically produced and imported foods. The new tolerance levels are supported by available residue data.

V. Conclusion

Therefore, tolerances are established for residues of fluazifop-P-butyl in or on berry, low growing, subgroup 13–07G at 3 ppm; Brassica, leafy greens, subgroup 4–16B at 15 ppm; chives, dried leaves at 40 ppm; chives, fresh leaves at 4 ppm;

fruit, citrus, group 10–10 at 0.01 ppm; fruit, stone, group 12–12 at 0.01 ppm; leaf petiole vegetable subgroup 22B at 3 ppm; onion, green, subgroup 3–07B at 1.5 ppm; papaya at 0.01 ppm; and vegetable, Brassica, head and stem, group 5–16 at 30 ppm. The established tolerances for fruit, citrus, group 10 at 0.03 ppm and fruit, stone at 0.05 ppm are designated to expire 6 months from the publication of this document. EPA is removing the established tolerances for onion, green at 1.5 ppm; rhubarb at 0.50 ppm; and strawberry at 3.0 ppm as unnecessary upon the establishment of the new tolerances. In addition, EPA is revising the residue definition for fluazifop-P-butyl in both 40 CFR 180.411(a) and (c) to be consistent with Agency practice and to read as follows:

''Tolerances are established for residues of the herbicide fluazifop-P-butyl, butyl (2*R*)-2-[4-[[5-(trifluoromethyl)-2-pyridinyl]oxy]phenoxy]propanoate, including its metabolites and degradates, in or on the commodities listed below. Compliance with the tolerance levels specified below is to be determined by measuring only those fluazifop-P-butyl residues convertible to fluazifop, 2-[4-[[5-(trifluoromethyl)-2-pyridinyl]oxy]phenoxy]propanoic acid, expressed as fluazifop, in or on the commodity''.

Additionally, tolerances are established for indirect or inadvertent residues of the fluazifop-P-butyl metabolite, 5-trifluoromethyl-2-pyridinone (TFP) in or on corn, field, forage at 0.01 ppm; corn, field, grain at 0.01 ppm; and corn, field, stover at 0.015 ppm.

VI. Statutory and Executive Order Reviews

This action establishes tolerances under FFDCA section 408(d) in response to a petition submitted to the Agency. The Office of Management and Budget (OMB) has exempted these types of actions from review under Executive Order 12866, entitled ''Regulatory Planning and Review'' (58 FR 51735, October 4, 1993). Because this action has been exempted from review under Executive Order 12866, this action is not subject to Executive Order 13211, entitled ''Actions Concerning Regulations That Significantly Affect Energy Supply, Distribution, or Use'' (66 FR 28355, May 22, 2001), or to Executive Order 13045, entitled ''Protection of Children from Environmental Health Risks and Safety Risks'' (62 FR 19885, April 23, 1997). This action does not contain any information collections subject to OMB approval under the Paperwork Reduction Act (PRA) (44 U.S.C. 3501 *et seq.*), nor does it require any special considerations under Executive Order 12898, entitled ''Federal Actions to Address Environmental Justice in Minority Populations and Low-Income Populations'' (59 FR 7629, February 16, 1994).

Since tolerances and exemptions that are established on the basis of a petition under FFDCA section 408(d), such as the tolerances in this final rule, do not require the issuance of a proposed rule, the requirements of the Regulatory Flexibility Act (RFA) (5 U.S.C. 601 *et seq.*), do not apply.

This action directly regulates growers, food processors, food handlers, and food retailers, not States or Tribes, nor does this action alter the relationships or distribution of power and responsibilities established by Congress in the preemption provisions of FFDCA section 408(n)(4). As such, the Agency has determined that this action will not have a substantial direct effect on States or Tribal Governments, on the relationship between the National Government and the States or Tribal Governments, or on the distribution of power and responsibilities among the various levels of government or between the Federal Government and Indian Tribes. Thus, the Agency has determined that Executive Order 13132, entitled ''Federalism'' (64 FR 43255, August 10, 1999), and Executive Order 13175, entitled ''Consultation and Coordination with Indian Tribal Governments'' (65 FR 67249, November 9, 2000) do not apply to this action. In addition, this action does not impose any enforceable duty or contain any unfunded mandate as described under Title II of the Unfunded Mandates Reform Act (UMRA) (2 U.S.C. 1501 *et seq.*).

This action does not involve any technical standards that would require Agency consideration of voluntary consensus standards pursuant to section 12(d) of the National Technology Transfer and Advancement Act (NTTAA) (15 U.S.C. 272 note).

VII. Congressional Review Act

Pursuant to the Congressional Review Act (5 U.S.C. 801 *et seq.*), EPA will submit a report containing this rule and other required information to the U.S. Senate, the U.S. House of Representatives, and the Comptroller General of the United States prior to publication of the rule in the **Federal Register**. This action is not a ''major rule'' as defined by 5 U.S.C. 804(2).

List of Subjects in 40 CFR Part 180

Environmental protection, Administrative practice and procedure, Agricultural commodities, Pesticides, and pests, Reporting and recordkeeping requirements.

Dated: April 24, 2023.

Charles Smith,

Director, Registration Division, Office of Pesticide Programs.

Therefore, for the reasons stated in the preamble, EPA is amending 40 CFR chapter 1 as follows:

PART 180—TOLERANCES AND EXEMPTIONS FOR PESTICIDE CHEMICAL RESIDUES IN FOOD

■ 1. The authority citation for part 180 continues to read as follows:

Authority: 21 U.S.C. 321(q), 346a and 371.

■ 2. Revise § 180.411 to read as follows:

§ 180.411 Fluazifop-P-butyl; tolerances for residues.

(a) *General.* Tolerances are established for residues of the herbicide fluazifop-P-butyl, butyl (2*R*)-2-[4-[[5-(trifluoromethyl)-2-pyridinyl]oxy]phenoxy]propanoate, including its metabolites and degradates, in or on the commodities in table 1 to this paragraph (a). Compliance with the tolerance levels specified in table 1 is to be determined by measuring only those fluazifop-P-butyl residues convertible to fluazifop, 2-[4-[[5-(trifluoromethyl)-2-pyridinyl]oxy]phenoxy]propanoic acid, expressed as fluazifop, in or on the commodity''.

TABLE 1 TO PARAGRAPH (a)

Commodity	Parts per million
Banana	0.01
Beans, dry, seed	50
Beet, sugar, dried pulp	1.0
Beet, sugar, molasses	3.5
Beet, sugar, roots	0.25
Berry, low growing, subgroup 13–07G	3
Brassica, leafy greens, subgroup 4–16B	15
Bushberry subgroup 13–07B	0.30
Caneberry subgroup 13–07A	0.08
Carrot, roots	2.0
Cattle, fat	0.05
Cattle, meat	0.05
Cattle, meat byproducts	0.05
Chives, dried leaves	40
Chives, fresh leaves	4
Citrus, dried pulp	0.40
Citrus, juice	0.06
Citrus, oil	30.0
Cotton, gin byproducts	1.5
Cotton, refined oil	1.3
Cotton, undelinted seed	1.0
Egg	0.05
Endive	6.0
Fruit, citrus, group 10 [2]	0.03
Fruit, citrus, group 10–10	0.01
Fruit, small vine climbing, except fuzzy kiwifruit, subgroup 13–07F	0.03
Fruit, stone [2]	0.05
Fruit, stone, group 12–12	0.01
Goat, fat	0.05
Goat, meat	0.05
Goat, meat byproducts	0.05
Hog, fat	0.05
Hog, meat	0.05
Hog, meat byproducts	0.05
Horse, fat	0.05
Horse, meat	0.05
Horse, meat byproducts	0.05
Leaf petiole vegetable subgroup 22B	3
Lettuce, head	3.0
Lettuce, leaf	5.0
Milk	0.05
Nut, macadamia	0.1
Onion, bulb, subgroup 3–07A	0.50
Onion, green, subgroup 3–07B	1.5
Papaya	0.01
Peanut	1.5
Peanut, meal	2.2
Pecans	0.05
Poultry, fat	0.05
Poultry, meat	0.05
Poultry, meat byproducts	0.05
Potato [1]	1.0
Potato, chips [1]	2.0
Potato, granules/flakes [1]	4.0
Sheep, fat	0.05
Sheep, meat	0.05
Sheep, meat byproducts	0.05
Soybean, seed	2.5
Vegetable, Brassica, head and stem, group 5–16	30
Vegetable, tuberous and corm, except potato, subgroup 1D	1.5

[1] No U.S. registrations.
[2] This tolerance expires on June 26, 2023.

(b) [Reserved]

(c) *Tolerances with regional registrations.* Tolerances are established for residues of the herbicide fluazifop-P-butyl, butyl (2*R*)-2-[4-[[5-(trifluoromethyl)-2-pyridinyl]oxy]phenoxy]propanoate, including its metabolites and degradates, in or on the commodities in table 2 to this paragraph (c). Compliance with the tolerance levels specified in table 2 is to be determined by measuring only those fluazifop-P-butyl residues convertible to fluazifop, 2-[4-[[5-(trifluoromethyl)-2-

pyridinyl]oxy]phenoxy]propanoic acid, expressed as fluazifop, in or on the commodity''.

TABLE 2 TO PARAGRAPH (c)

Commodity	Parts per million
Asparagus	3.0
Coffee, bean	0.1
Fescue, forage	4.0
Fescue, hay	15
Pepper, tabasco	1.0

(d) *Indirect or inadvertent residues.* Tolerances are established for residues of the herbicide fluazifop-P-butyl, butyl (2*R*)-2-[4-[[5-(trifluoromethyl)-2-pyridinyl]oxy]phenoxy]propanoate, including its metabolites and degradates, in or on the commodities in table 3 to this paragraph (d). Compliance with the tolerance levels specified in table 3 is to be determined by measuring only those fluazifop-P-butyl residues convertible to 5-trifluoromethyl-2-pyridinone (TFP), expressed as TFP, in or on the commodity.

TABLE 3 TO PARAGRAPH (d)

Commodity	Parts per million
Corn, field, forage	0.01
Corn, field, grain	0.01
Corn, field, stover	0.015

[FR Doc. 2023–08939 Filed 4–26–23; 8:45 am]

BILLING CODE 6560–50–P

GENERAL SERVICES ADMINISTRATION

41 CFR Part 102–39

[FMR Case 2019–102–01; Docket No. GSA–FMR–2019–0015, Sequence No. 2]

RIN 3090–AK11

Federal Management Regulation; Replacement of Personal Property Pursuant to the Exchange/Sale Authority

AGENCY: Office of Government-wide Policy (OGP), General Services Administration (GSA).

ACTION: Final rule.

SUMMARY: GSA is issuing a final rule amending the Federal Management Regulation (FMR) to clarify the exchange/sale provisions and improve the application of this important authority across Federal agencies. The related FMR Part, Replacement of Personal Property Pursuant to the Exchange/Sale Authority, was last revised in November of 2011.

DATES: *Effective:* May 30, 2023.

FOR FURTHER INFORMATION CONTACT: William Garrett, Director, Personal Property Policy Division, Office of Government-wide Policy, Office of Asset and Transportation Management (MA), at 202–368–8163 or *william.garrett@gsa.gov* for clarification of content. For information pertaining to status or publication schedules, contact the Regulatory Secretariat Division at 202–501–4755 or *GSARegSec@gsa.gov.* Please cite FMR Case 2019–102–01.

SUPPLEMENTARY INFORMATION:

I. Background

This final rule amends the Federal Management Regulation (FMR) to update current policy and remove outdated and unnecessary information as proposed with changes published on February 18, 2022 at 87 FR 9303. These changes, made as a result of public comments, are detailed in section II.B. of this notice. In 2018, the Government Accountability Office (GAO) Report 19–33, ''GSA and VA Have Opportunities to Improve the Exchange/Sale Process'', identified confusion among some agencies on the use of the exchange/sale authority which could be alleviated by, among other actions, revising FMR Part 102–39.

Personal property includes a wide variety of Government items such as computers, office equipment, furniture, and vehicles, as well as more specialized items specific to agencies, such as medical equipment for the U.S. Department of Veterans Affairs (VA) and medical helicopters for the U.S. Army. The Federal Government owns and manages more than a trillion dollars of personal property. In Fiscal Year (FY) 2021, Federal agencies reported approximately $1.9 trillion in capitalized personal property assets under their control. Over time, agencies' personal property may no longer adequately perform the task for which it was acquired. Title 40, United States Code (U.S.C.), section 503 authorizes agencies to exchange (trade-in) or sell such property still needed to meet mission needs and apply the exchange allowance or sale proceeds to acquire similar replacement property.

Such transactions are known as personal property ''exchange/sale'' transactions. These transactions facilitate the replacement of personal property by allowing agencies to offset the cost of new, similar property, resulting in savings to agency funds. Without this authority, agencies would have to expend the full purchase price of new personal property from appropriations, while depositing the proceeds from the disposition of worn property in the U.S. Treasury. Because exchange/sale transactions provide agencies with opportunities to save costs, it is important that agencies using this authority establish policies, processes, and procedures with effective controls, in order to ensure that they meet applicable requirements and are good stewards of Government resources.

GSA's regulations at 41 Code of Federal Regulations (CFR) part 102–39 describe the terms, conditions, and reporting requirements for personal property exchanged or sold under this authority. The personal property exchange/sale authority allows agencies to replace property that is not excess or surplus, *i.e.,* the property is still needed to meet the agency's continuing mission. In addition, agencies must meet the following requirements to use the exchange/sale authority:

- The property exchanged or sold is similar to the property acquired.
- The personal property exchanged or sold was not acquired for the principal purpose of later exchanging it or selling it using the authority. For example, an agency cannot purchase a more costly piece of equipment than necessary to meet mission needs for the sole reason that it will deliver a higher value when sold using this exchange/sale authority.
- Exchange allowances and sales proceeds can only be put toward the purchase of similar replacement property and cannot be used for services. In other words, an agency can use proceeds from the sale of a vehicle to purchase a new vehicle, but it cannot use proceeds to hire a mechanic to repair an existing vehicle.
- Exchange allowances and sales proceeds are available during the same fiscal year (FY) the property was exchanged or sold and the following FY. This means that for an item sold in FY 2023, an agency has the rest of FY 2023, as well as FY 2024 to purchase a replacement item. If agencies do not spend these funds by the end of the next FY, monies are to be deposited in the U.S. Treasury as miscellaneous receipts, except as otherwise authorized by law. Such legal authority may, for example, take the form of an authorized revolving fund where the rules of the program allow use of funds beyond the restrictions of the FMR.
- Agencies are prohibited from using the authority to replace certain types of property as detailed in FMR § 102–39.60 (weapons, nuclear ordinances, etc.).

Agencies may choose between two transaction methods to replace property,

the exchange (trade-in) method or the sale method, but must determine which method provides the greatest return to the Government, including factoring in administrative and overhead expenses. A typical exchange occurs when the original manufacturer delivers a replacement item to the agency and removes the item being replaced. The manufacturer applies a trade-in credit (an allowance) for the purchase of the replacement item. If the sale method is used, the agency receives the sale proceeds for the sale of the item and applies those proceeds to the purchase of the replacement personal property.

If contemplating an exchange/sale, agencies are guided to follow a process similar to the disposal process for excess property by making it available to other Federal agencies and state agencies by posting it to GSAXcess at *https://gsaxcess.gov/.* This is GSA's website for reporting, searching, and selecting property. This process allows other Federal agencies or state agencies to obtain the property for the price required by the reporting agency to help fund the acquisition of replacement property under the exchange/sale authority.

Agencies are required to submit a summary report to GSA through the GSA Personal Property Reporting Tool (PPRT), *https://www.property.reporting.gov,* at the end of each FY on the type, the quantity, the exchange allowances and/or sale proceeds, as applicable, and the original acquisition cost of items for both exchange and sale transactions. Agencies with no transactions during a FY must submit a negative report. Ultimately, agencies decide whether to use the exchange/sale authority to replace personal property in their inventories.

II. Discussion of the Final Rule

A. Summary of Significant Changes

The definition for ''similar'' in FMR § 102–39.20 is revised to include items designed or constructed for the same general purpose. A Note is also added to clarify that only one of the criteria in this definition needs to be met for the property to be considered ''similar'' for an exchange/sale transaction.

FMR § 102–39.25 is revised to allow deviations to the exchange/sale provisions except for those mandated by statute or otherwise described in the part, including FMR § 102–39.80, which details the accounting requirements for exchange allowances and sales proceeds.

FMR § 102–39.40 is revised to clarify the differences between the use of the exchange/sale authority and the disposal process for excess/surplus personal property. The primary difference is that personal property disposal under the excess/surplus process does not allow for the use of proceeds or allowances (if any), in acquiring replacement similar assets. Exchange/sale property is replacement property that is non-excess and nonsurplus, meaning the agency has a continuing need for the property, but the specific item(s) are no longer suitable to the need and must be replaced, and therefore are not reported to GSA as excess or surplus for transfer or donation purposes.

The following Federal Supply Classification (FSC) Groups are removed from the ''prohibited list'' at FMR § 102–39.60:

- *FSC Group 42:* Firefighting, rescue, and safety equipment;
- *FSC Group 51:* Hand tools; and
- *FSC Group 54:* Prefabricated structure and scaffolding (FSC 5410 Prefabricated and Portable Buildings, FSC 5411 Rigid Wall Shelters, and FSC 5419 Collective Modular Support System only).

The restrictions remaining in FMR § 102–39.60 involve assets which are inherently dangerous or could pose a significant public health or safety concern, comprising assets in the following FSC Groups of personal property:

- 10 Weapons.
- 11 Nuclear ordnance.
- 44 Furnace, Steam Plant, and Drying Equipment; and Nuclear Reactors (FSC Class 4470, Nuclear Reactors only);
- *FSC Group 84:* Clothing, individual equipment, and insignia; and
- 68 Chemical and chemical products.

This change also removes ''except medicinal chemicals'' from FMR § 102–39.60 as they are categorized under FSG 65, not FSG 68.

FMR § 102–39.65 is revised to clarify that an exchange or sale under this part may occur after the acquisition of the replacement property. For example, if a Magnetic Resonance Imaging (MRI) machine is needed for use daily, the replacement machine may be acquired and installed before the existing machine is removed and exchanged or sold. If the existing machine is sold, in accordance with agency policy, the funds may be returned to the appropriation used to acquire the replacement machine. If the existing machine is exchanged, in accordance with agency policy, the agency agreement with the entity providing the replacement must document the responsibilities of both parties to execute this transaction.

FMR § 102–39.80 is revised to add language that no deviations will be granted for this section.

FMR § 102–39.85 is revised to update the reporting policy and process to reflect the use of a new online reporting tool.

FMR § 102–39.90 is added in accordance with the recommendations of GAO report 19–33 to provide additional guidance to Federal agencies regarding the publication of GSA Bulletins, including Bulletin B–48, Guidance on Exchange/Sale Financial Accounting for Personal Property, and updates to GSA's exchange/sale website.

According to GSA's annual summary data, 27 agencies reported using the exchange/sale authority and received a total of about $2.8 billion in exchange allowances or sale proceeds from fiscal year 2016 through fiscal year 2020. While many agencies used the authority, a few agencies, particularly GSA, together accounted for about 88 percent of all allowances and proceeds. Specifically, 5 of 27 agencies reported nearly all exchange allowances and sale proceeds. GSA accounted for about $1.5 billion of about $2.8 billion (or about 55 percent) of reported allowances and proceeds across the Federal Government. Four other agencies—the Departments of Homeland Security, Agriculture, Defense, and the Interior—accounted for about $899 million (or about 32 percent) of the total. The other 22 agencies using the authority reported about $340 million (or about 12 percent) in exchange allowances or sales proceeds over the 5-year period. Finally, agencies reported using the sale method more than the exchange method. Sales by agencies accounted for about $2.5 billion (or about 91 percent), while use of the exchange method accounted for about $247 million (or about 9 percent) of total transactions reported, primarily due to GSA's reporting more use of the sale method over the exchange method.

While some agencies reported hundreds of millions of dollars in exchange allowances and sale proceeds, the data show that 8 Federal agencies—including the Department of Labor and the Office of Personnel Management—reported relatively few transactions, which totaled less than $200,000 in exchange allowances and sales proceeds.

By using the exchange/sale authority, agencies have an opportunity to be good stewards of government property by efficiently replacing needed property, including high-value items, that serves critical and continuing requirements to meet agency missions. GSA expects

these amendments to increase agency flexibility and understanding of this program. GSA believes these amendments will help agencies take better advantage and increase the use of this authority, thereby becoming more effective stewards of government property and replenishing property more efficiently.

B. Analysis of Public Comments

The proposed rule was published in the **Federal Register** on February 18, 2022 (87 FR 9303). Comments were received from six respondents, some of which included multiple questions, comments, or concerns. Of the comments received, there were five topics germane to and within the scope of the final rule. An analysis of these public comments follows:

Comment: Five respondents expressed concerns about the proposed revision to one of the criteria of the definition of ''similar'' in FMR § 102–39.20 to require that replacement property fall within a defined Federal Supply Classification (FSC), instead of the current, broader FSC Group. In particular, many objected that the revision would negatively impact agency missions and place extensive administrative and financial burden on their aviation, vehicle, and maritime programs.

Response: Agree. Revising the definition of ''similar'' to more narrowly tailor one of the criteria of ''similar'' to require that replacement property fall within a defined 4-digit Federal Supply Classification is unduly restrictive. The proposed revision to FMR § 102–39.20(2) was removed and is not included in the final rule.

Comment: In addition to the concern addressed directly above, one respondent suggested also adding ''capability'' to the definition of ''similar'' in FMR § 102–39.20(4).

Response: Disagree. GSA informed the commenting agency that the proposed revision to FMR § 102–39.20(2) was removed from the final rule. The commenting agency still recommended adding capability to FMR § 102–39.20(4), but does not object to leaving FMR § 102–39.20(4) as is. As a result, GSA chose to maintain the language of the proposed rule. Additionally, an item only needs to meet one of the four criteria of the definition of ''similar.''

Comment: One respondent opposed prohibiting deviations to FMR § 102–39.80, which states exchange allowances or proceeds of sale will be available during the fiscal year in which the property was exchanged or sold and for one fiscal year thereafter for the purchase of replacement property.

Response: Disagree. GSA does not have the authority to alter an agency's applicable fiscal law constraints as determined by the GAO, and therefore, cannot extend the availability of funds. Please refer to the GAO, Principles of Federal Appropriations Law, 3rd ed., 2008 rev., ch. 12, sec. A.4, GAO–08–978SP (Washington, DC: Sept. 2008). The regulation does, however, recognize that agencies may be allowed to retain allowances or proceeds ''as authorized by law.'' GSA accordingly recommends that agencies consult their respective Offices of Chief Financial Officer and Offices of the General Counsel, as well as their Office of Management and Budget Resource Management Officers, as necessary, on the use and availability of these funds.

Comment: One respondent suggested that GSA should eliminate the proposed revision to FMR § 102–39.60, which would remove the following FSC Groups from the prohibited list: FSC Groups 42, Firefighting, rescue, and safety equipment; 51, Hand tools; and 54, Prefabricated structure and scaffolding (FSC 5410 Prefabricated and Portable Buildings, FSC 5411 Rigid Wall Shelters, and FSC 5419 Collective Modular Support System only).

Response: Disagree. The removal of the aforementioned FSC Groups will allow agencies to recoup funds for vital programs to support their agency missions. The remaining restrictions on the prohibited list involve assets which are inherently dangerous or pose a significant public health or safety concern.

Comment: One respondent suggested that GSA should add additional reporting requirements to FMR § 102–39.85. Specifically, the respondent suggested agencies should be required to include the four-digit FSC and the item nomenclature as part of the annual exchange/sale report.

Response: Disagree. As explained above under paragraph A of this section, the proposed revisions to FMR § 102–39.20(2) were removed and are not included in the final rule; therefore, collecting data at the 4-digit FSC Group level is not warranted.

C. Expected Cost Impact to the Public

There is no expected cost to the public from this rule, as this rule is largely administrative. The changes will clarify the exchange/sale provisions and improve the application of this important authority across Federal agencies.

III. Executive Orders 12866 and 13563

Executive Orders (E.O.s) 12866 and 13563 direct agencies to assess all costs and benefits of available regulatory alternatives and, if regulation is necessary, to select regulatory approaches that maximize net benefits (including potential economic, environmental, public health and safety effects, distributive impacts, and equity). E.O. 13563 emphasizes the importance of quantifying both costs and benefits, of reducing costs, of harmonizing rules, and of promoting flexibility. The Office of Information and Regulatory Affairs (OIRA) has determined that this is not a significant regulatory action and, therefore, was not subject to review under section 6(b) of Executive Order 12866, Regulatory Planning and Review, dated September 30, 1993.

IV. Congressional Review Act

OIRA has determined that this rule is not a ''major rule'' as defined by 5 U.S.C. 804(2). Additionally, this rule is excepted from Congressional Review Act reporting requirements prescribed under 5 U.S.C. 801 since it relates to agency management or personnel under 5 U.S.C. 804(3).

V. Regulatory Flexibility Act

This final rule will not have a significant economic impact on a substantial number of small entities within the meaning of the Regulatory Flexibility Act, 5 U.S.C. 601, *et seq.,* because it applies to agency management or personnel. Therefore, an Initial Regulatory Flexibility Analysis has not been performed.

VI. Paperwork Reduction Act

The Paperwork Reduction Act does not apply because the changes to the FMR do not impose recordkeeping or information collection requirements, or the collection of information from offerors, contractors, or members of the public that require the approval of the Office of Management and Budget (OMB) under 44 U.S.C. 3501, *et seq.* Reporting requirements are only addressed to Federal agencies regarding their Federal personal property transactions.

List of Subjects in 41 CFR Part 102–39

Excess and surplus Government property, Government property management.

Robin Carnahan,

Administrator of General Services.

For the reasons set forth in the preamble, GSA amends 41 CFR part 102–39 as set forth below:

PART 102–39—REPLACEMENT OF PERSONAL PROPERTY PURSUANT TO THE EXCHANGE/SALE AUTHORITY

■ 1. The authority citation for 41 CFR part 102–39 continues to read as follows:

Authority: 40 U.S.C. 121(c); 40 U.S.C. 503.

■ 2. Amend § 102–39.20 in the definition ''Similar'' by revising paragraph (4) and adding a note to read as follows:

§ 102–39.20 What definitions apply to this part?

* * * * *

Similar * * *

(4) Are designed or constructed for the same general purpose (includes any and all forms of property regardless of the FSC Group to which they are assigned).

Note 1 to the definition of ''similar'': Only one of the criteria in this definition needs to be met for the property to be considered ''similar'' for an exchange/sale transaction.

* * * * *

■ 3. Amend § 102–39.25 by revising the first sentence to read as follows:

§ 102–39.25 Which exchange/sale provisions are subject to deviation?

All of the provisions in this part are subject to deviation (upon presentation of adequate justification) except for those mandated by statute, as described in note 1 to § 102–39.60(a) and § 102–39.80. * * *

■ 4. Revise § 102–39.40 to read as follows:

§ 102–39.40 How does the exchange/sale authority differ from the disposal process for excess/surplus personal property?

(a) The primary difference is that sales proceeds or exchange allowances may be used to acquire similar replacement personal property that is still needed under the exchange/sale authority as described in this part; whereas under the more frequently used excess/surplus disposal process, you would not be able to use sales proceeds or exchange allowances to acquire replacement personal property.

(b) Your use of the exchange/sale authority is optional and should be considered when needed replacement assets may be acquired under the provisions of this part. If exchange/sale is not practicable (for example, if conducting an exchange/sale transaction is not cost effective), you should dispose of the property through the excess/surplus disposal process by reporting the property as excess, as addressed in part 102–36 of this chapter.

(c) In the excess/surplus disposal process, any net proceeds from the sale of surplus property generally must be forwarded to the miscellaneous receipts account at the United States Treasury, and thus would not be available to you for use in acquiring similar replacement property or for any other purpose. You may use the exchange/sale authority in the acquisition of personal property even if the acquisition is under a services contract, as long as the property acquired under the services contract is similar to the property exchanged or sold (*e.g.,* for a service life extension program (SLEP), exchange allowances or sales proceeds would be available for replacement of similar items, but not for services).

■ 5. Amend § 102–39.60 by revising paragraph (a) to read as follows:

§ 102–39.60 What restrictions and prohibitions apply to the exchange/sale of personal property?

* * * * *

(a) The following FSC Groups of personal property:

(1) 10 Weapons.

(2) 11 Nuclear ordinance.

(3) 44 Furnace, Steam Plant, and Drying Equipment; and Nuclear Reactors (FSC Class 4470, Nuclear Reactors only).

(4) 68 Chemical and chemical products.

(5) 84 Clothing, individual equipment, and insignia.

Note 1 to paragraph (a): Under no circumstances will deviations be granted for FSC Class 1005, Guns through 30mm. Deviations are not required for Department of Defense (DoD) property in FSC Groups 10 (for classes other than FSC Class 1005), or any other FSC Group, for which the applicable DoD demilitarization requirements, and any other applicable regulations and statutes are met.

* * * * *

■ 6. Amend § 102–39.65 by:

■ a. Removing ''and'' from the end of paragraph (d);

■ b. Redesignating paragraph (e) as paragraph (f); and

■ c. Adding new paragraph (e).

The addition reads as follows:

§ 102–39.65 What conditions apply to the exchange/sale of personal property?

* * * * *

(e) Your agency documents at the time of exchange or sale (or at the time of acquiring the replacement property if acquisition precedes the exchange or sale) that the exchange allowance or sale proceeds will be applied to the acquisition of replacement property; and

* * * * *

■ 7. Amend § 102–39.80 by adding a sentence at the end to read as follows:

§ 102–39.80 What are the accounting requirements for exchange allowances or proceeds of sale?

* * * Under no circumstances will deviations be granted for this section.

■ 8. Revise § 102–39.85 to read as follows:

§ 102–39.85 What information am I required to report?

You must submit, within 90 calendar days after the close of each fiscal year (FY), an exchange/sale report using the online Personal Property Reporting Tool template found at *https://www.property.reporting.gov.* This template provides the specific information needed for your agency's report. You can contact the GSA Help Desk at *help.PPRT@gsa.gov* if you need assistance accessing the online reporting tool. All reports, including negative reports, must be submitted electronically through the Personal Property Reporting Tool. Transactions involving books and periodicals in your libraries need not be reported.

■ 9. Add § 102–39.90 to read as follows:

§ 102–39.90 Where do I obtain additional information?

Additional information is provided at the GSA websites *www.gsa.gov/bulletin* and *www.gsa.gov/exchangesale.*

[FR Doc. 2023–08549 Filed 4–26–23; 8:45 am]

BILLING CODE P

DEPARTMENT OF DEFENSE

Defense Acquisition Regulations System

48 CFR Parts 212 and 228

[Docket DARS–2023–0001]

Defense Federal Acquisition Regulation Supplement; Technical Amendments

AGENCY: Defense Acquisition Regulations System, Department of Defense (DoD).

ACTION: Final rule; technical amendment.

SUMMARY: DoD is amending the Defense Federal Acquisition Regulation Supplement (DFARS) in order to make needed editorial changes.

DATES: Effective April 27, 2023.

FOR FURTHER INFORMATION CONTACT: Ms. Jennifer D. Johnson, Defense

Acquisition Regulations System, telephone 703–717–8226.

SUPPLEMENTARY INFORMATION: This final rule amends the DFARS to make needed editorial changes to 48 CFR part 212. Section 212.301(f)(vii) is amended to list the clauses in numerical order. Sections 212.503 and 212.504 are revised to list the statutory entries in numerical and alphabetical order, and add the descriptive term ''(prohibits mandatory arbitration)'' at the redesignated section 212.503 paragraph (vii) and section 212.504 paragraph (xiv). A typographical error is corrected at section 228.371.

List of Subjects in 48 CFR Parts 212 and 228

Government procurement.

Jennifer D. Johnson,

Editor/Publisher, Defense Acquisition Regulations System.

Therefore, 48 CFR parts 212 and 228 are amended as follows:

■ 1. The authority citation for 48 CFR parts 212 and 228 continues to read as follows:

Authority: 41 U.S.C. 1303 and 48 CFR chapter 1.

PART 212—ACQUISITION OF COMMERCIAL PRODUCTS AND COMMERCIAL SERVICES

■ 2. Amend section 212.301 by—

■ a. Removing paragraph (f)(vii)(C);

■ b. Redesignating paragraphs(f)(vii)(A) and (B) as paragraphs (f)(vii)(B) and (C), respectively; and

■ c. Adding a new paragraph (f)(vii)(A).

The addition reads as follows:

212.301 Solicitation provisions and contract clauses for the acquisition of commercial products and commercial services.

* * * * *

(f) * * *

(vii) * * *

(A) Use the provision at 252.219–7000, Advancing Small Business Growth, as prescribed in 219.309(1), to comply with 10 U.S.C. 4959.

* * * * *

■ 3. Amend section 212.503 by revising paragraphs (a)(iii) through (viii) and (c)(i) and (ii) to read as follows:

212.503 Applicability of certain laws to Executive agency contracts for the acquisition of commercial products and commercial services.

(a) * * *

(iii) 10 U.S.C. 3845, Contractor Inventory Accounting System Standards (see 252.242–7004).

(iv) 10 U.S.C. 4651, note prec. (section 855, Pub. L. 117–81), Employment Transparency Regarding Individuals Who Perform Work in the People's Republic of China.

(v) 10 U.S.C. 4656(a), Prohibition on Persons Convicted of Defense Related Felonies.

(vi) 10 U.S.C. 4753(b), Requirement to Identify Suppliers.

(vii) Section 8116 of the Defense Appropriations Act for Fiscal Year 2010 (Pub. L. 111–118) (prohibits mandatory arbitration) and similar sections in subsequent DoD appropriations acts.

(viii) Domestic Content Restrictions in the National Defense Appropriations Acts for Fiscal Years 1996 and Subsequent Years, unless the restriction specifically applies to commercial products or commercial services. For the restriction that specifically applies to commercial ball or roller bearings as end items, see 225.7009–3 (section 8065 of Pub. L. 107–117).

(c) * * *

(i) 10 U.S.C. 3703, Truthful Cost or Pricing Data (see FAR 15.403–1(b)(3)).

(ii) 10 U.S.C. 4655, Prohibition on Limiting Subcontractor Direct Sales to the United States (see FAR 3.503 and 52.203–6).

■ 4. Amend section 212.504 by revising paragraphs (a)(i) through (xv) to read as follows:

212.504 Applicability of certain laws to subcontracts for the acquisition of commercial products and services.

(a) * * *

(i) 10 U.S.C. 2391 note, Notification of Substantial Impact on Employment.

(ii) 10 U.S.C. 2631, Transportation of Supplies by Sea (except as provided in the clause at 252.247–7023, Transportation of Supplies by Sea).

(iii) 10 U.S.C. 3321(b), Prohibition on Contingent Fees.

(iv) 10 U.S.C. 3741–3750, Allowable Costs Under Defense Contracts.

(v) 10 U.S.C. 3841(d), Examination of Records of a Contractor.

(vi) 10 U.S.C. 3845, Contractor Inventory Accounting System Standards.

(vii) 10 U.S.C. 4651, note prec. (section 855, Pub. L. 117–81), Employment Transparency Regarding Individuals Who Perform Work in the People's Republic of China.

(viii) 10 U.S.C. 4654, Prohibition Against Doing Business with Certain Offerors or Contractors.

(ix) 10 U.S.C. 4656(a), Prohibition on Persons Convicted of Defense Related Felonies.

(x) 10 U.S.C. 4753(b), Requirement to Identify Suppliers.

(xi) 10 U.S.C. 4801 note prec., Notification of Proposed Program Termination.

(xii) 10 U.S.C. 4864, Miscellaneous Limitations on the Procurement of Goods Other Than United States Goods.

(xiii) 10 U.S.C. 4871, Reporting Requirement Regarding Dealings with Terrorist Countries.

(xiv) Section 8116 of the Defense Appropriations Act for Fiscal Year 2010 (Pub. L. 111–118) (prohibits mandatory arbitration) and similar sections in subsequent DoD appropriations acts.

(xv) Domestic Content Restrictions in the National Defense Appropriations Acts for Fiscal Years 1996 and Subsequent Years, unless the restriction specifically applies to commercial products and commercial services. For the restriction that specifically applies to commercial ball or roller bearings as end items, see 225.7009–3 (section 8065 of Pub. L. 107–117).

* * * * *

PART 228—BONDS AND INSURANCE

228.371 [Amended]

■ 5. Amend section 228.371 in paragraph (b)(2) by removing ''228.371–3'' and adding ''228.370–3'' in its place.

[FR Doc. 2023–08647 Filed 4–26–23; 8:45 am]

BILLING CODE 5001–06–P

DEPARTMENT OF THE INTERIOR

Fish and Wildlife Service

50 CFR Part 17

[Docket No. FWS–R3–ES–2019–0020; FF09E21000 FXES1111090FEDR 234]

RIN 1018–BD98

Endangered and Threatened Wildlife and Plants; Threatened Species Status With Section 4(d) Rule for Big Creek Crayfish and St. Francis River Crayfish and Designation of Critical Habitat

AGENCY: Fish and Wildlife Service, Interior.

ACTION: Final rule.

SUMMARY: We, the U.S. Fish and Wildlife Service (Service), determine threatened species status under the Endangered Species Act of 1973 (Act), as amended, for the Big Creek crayfish (*Faxonius peruncus*) and the St. Francis River crayfish (*Faxonius quadruncus*), two crayfish species from southern Missouri. We also finalize a rule under the authority of section 4(d) of the Act that provides regulatory measures that are necessary and advisable to provide for the conservation of these species. In addition, we designate critical habitat for the species; in total, approximately 1,069 river miles (1,720 river

kilometers) for the Big Creek crayfish and 1,043 river miles (1,679 river kilometers) for the St. Francis River crayfish in Iron, Madison, St. Francois, Washington, and Wayne Counties, Missouri, fall within the boundaries of the critical habitat designations. This rule applies the protections of the Act to these species and their designated critical habitats.

DATES: This rule is effective May 30, 2023.

ADDRESSES: This final rule is available on the internet at *https://www.regulations.gov and https://www.fws.gov/midwest/*. Comments and materials we received, as well as supporting documentation we used in preparing this rule, are available for public inspection at *https://www.regulations.gov at* Docket No. FWS–R3–ES–2019–0020.

The coordinates or plot points or both from which the maps are generated are included in the decision file for the critical habitat designations and are available at *https://www.regulations.gov* at Docket No. FWS–R3–ES–2019–0020, and at the field office responsible for the designations (see **FOR FURTHER INFORMATION CONTACT**, below). Any additional tools or supporting information that we developed for the critical habitat designations will also be available at the Service's website and at *https://www.regulations.gov.*

FOR FURTHER INFORMATION CONTACT: John Weber, Field Supervisor; U.S. Fish and Wildlife Service; Missouri Ecological Services Field Office; 101 Park DeVille Drive, Suite A; Columbia, MO 65203–0057; telephone 573–234–2132. Individuals in the United States who are deaf, deafblind, hard of hearing, or have a speech disability may dial 711 (TTY, TDD, or TeleBraille) to access telecommunications relay services. Individuals outside the United States should use the relay services offered within their country to make international calls to the point-of-contact in the United States.

SUPPLEMENTARY INFORMATION:

Executive Summary

Why we need to publish a rule. Under the Act, a species warrants listing if it meets the definition of an endangered species (in danger of extinction throughout all or a significant portion of its range) or a threatened species (likely to become endangered within the foreseeable future throughout all or a significant portion of its range). If we determine that a species warrants listing, we must list the species promptly and designate the species' critical habitat to the maximum extent prudent and determinable. We have determined that the Big Creek crayfish and the St. Francis River crayfish both meet the definition of threatened species; therefore, we are listing them as such and finalizing designations of critical habitat for both species. Both listing a species as an endangered or threatened species and designating critical habitat can be completed only by issuing a rule through the Administrative Procedure Act rulemaking process.

What this document does. This rule lists the Big Creek crayfish (*Faxonius peruncus*) and the St. Francis River crayfish (*Faxonius quadruncus*) as threatened species and designates critical habitat for both species. We are designating approximately 1,069 river miles (1,720 river kilometers) for the Big Creek crayfish and 1,043 river miles (1,679 river kilometers) for the St. Francis River crayfish in Iron, Madison, St. Francois, Washington, and Wayne Counties, Missouri. We are also finalizing a rule under the authority of section 4(d) of the Act that provides measures that are necessary and advisable to provide for the conservation of these species.

The basis for our action. Under the Act, we may determine that a species is an endangered or threatened species based on any of five factors: (A) The present or threatened destruction, modification, or curtailment of its habitat or range; (B) overutilization for commercial, recreational, scientific, or educational purposes; (C) disease or predation; (D) the inadequacy of existing regulatory mechanisms; or (E) other natural or manmade factors affecting its continued existence. We have determined that displacement (Factor E) by the woodland crayfish (*Faxonius hylas*) is the primary threat to both the Big Creek crayfish and the St. Francis River crayfish. However, degraded water quality (Factor A) from heavy metal mining activities in the watershed is impacting the species and may act synergistically with the spread of the nonnative woodland crayfish and subsequent displacement of the Big Creek crayfish and St. Francis River crayfish. The existing regulatory mechanisms are not adequately addressing these threats such that the species do not warrant listing (Factor D).

Section 4(a)(3) of the Act requires the Secretary of the Interior (Secretary) to designate critical habitat concurrent with listing to the maximum extent prudent and determinable. Section 3(5)(A) of the Act defines critical habitat as (i) the specific areas within the geographical area occupied by the species, at the time it is listed, on which are found those physical or biological features (I) essential to the conservation of the species and (II) which may require special management considerations or protections; and (ii) specific areas outside the geographical area occupied by the species at the time it is listed, upon a determination by the Secretary that such areas are essential for the conservation of the species. Section 4(b)(2) of the Act states that the Secretary must make the designation on the basis of the best scientific data available and after taking into consideration the economic impact, the impact on national security, and any other relevant impacts of specifying any particular area as critical habitat.

Previous Federal Actions

On September 17, 2020, we published in the **Federal Register** (85 FR 58192) a proposed rule to list the Big Creek crayfish and the St. Francis River crayfish as threatened species under the Act, to adopt a species-specific rule issued under section 4(d) of the Act (''4(d) rule'') that provides for the protection of the Big Creek crayfish and the St. Francis River crayfish, and to designate critical habitat for both species under the Act. Please refer to that proposed rule for a detailed description of previous Federal actions concerning this species.

During the public comment period for the September 17, 2020, proposed rule, we received a request for a public hearing. On April 27, 2021, we published a document (86 FR 22127) reopening the September 17, 2020, proposed rule's comment period for an additional 30 days and announcing a public informational meeting and public hearing on the proposed rule. We held the virtual public informational meeting followed by a public hearing on May 13, 2021.

Summary of Changes From the Proposed Rule

The final rule incorporates changes to our September 17, 2020, proposed rule (85 FR 58192) and our species status assessment report based on the comments we received, as discussed below under Summary of Comments and Recommendations. We have also revised our significant portion of the range analysis.

Based on information we received in comments and our further consideration, in this rule, we refine the 4(d) rule for these species to more clearly define take prohibitions and to accurately regulate only those activities that are necessary and advisable for the protection of the Big Creek crayfish and the St. Francis River crayfish (see

Provisions of the 4(d) Rule, below). The Missouri Department of Conservation (MDC) informed us that adopting two of the exceptions to the prohibitions in the proposed 4(d) rule (the exceptions to the incidental take prohibitions for a person capturing crayfish for educational and observation purposes, and for a person capturing and possessing up to 25 of each species for use as bait) would conflict with the Wildlife Code of Missouri (Missouri Code). Under the Missouri Code, any species added to the Federal List of Endangered and Threatened Wildlife is also added to Missouri's State list of endangered species. Because the Missouri Code also prohibits the purposeful take of any species listed by the State as endangered, allowing capture of the crayfishes for educational and observation purposes and for use as bait would be in direct conflict with the Missouri Code and hinder the MDC's ability to conserve the species. The MDC also expressed concerns that these two exceptions would hinder the enforcement of the prohibition on activities that may facilitate the introduction or spread of the invasive woodland crayfish. After reviewing the MDC's comment and further coordinating with the State of Missouri, we conclude that adopting those two exceptions to the prohibitions in the 4(d) rule would undermine the State's ability to provide conservation for the species, and we do not include them in this final rule.

In this rule, we also expand the exception to the prohibitions in the proposed 4(d) rule concerning incidental take caused by restoration activities or other activities that will result in an overall benefit to one or both of the species. In this exception, we now include the additional restoration activity of replacing in-stream low water crossings that obstruct movement of aquatic organisms with crossings that facilitate the movement of species and materials. Replacing these crossings is expected to result in an overall benefit to one or both species and including it as an exception is an additional activity that we would expect to be beneficial to the conservation of the species. We removed mention of specific Federal agencies that we may consult with on these activities. We removed the list of Federal agencies to reduce confusion, as we would consult whenever a Federal nexus exists, not only with the Federal agencies we specifically named in the proposed 4(d) rule. We also added ''surface and groundwater withdrawals'' to the list of prohibited activities that could impact the hydrological flows such that the species' reproduction or survival will be impacted, in an effort to provide a more detailed list of such activities.

Lastly, in this critical habitat designation, we do not include ''[s]paces under rocks or shallow burrows in gravel that provide refugia'' as a physical or biological feature. That physical and biological feature, which was included in the proposed designation, is redundant with the following physical or biological feature that remains in this designation: ''Adequately low stream embeddedness so that spaces under rocks and cavities in gravel remain available to the Big Creek crayfish and St. Francis River crayfish.''

Supporting Documents

A species status assessment (SSA) team prepared an SSA report for the Big Creek crayfish and the St. Francis River crayfish. The SSA team was composed of Service biologists, in consultation with other species experts. The SSA report represents a compilation of the best scientific and commercial data available concerning the status of the species, including the impacts of past, present, and future factors (both negative and beneficial) affecting the species.

In accordance with our joint policy on peer review published in the **Federal Register** on July 1, 1994 (59 FR 34270), and our August 22, 2016, memorandum updating and clarifying the role of peer review of listing actions under the Act, we solicited independent scientific review of the information contained in the SSA report. We sent the SSA report to four independent peer reviewers and received one response. The peer reviews can be found at *https://www.regulations.gov.* In preparing the proposed rule, we incorporated the results of these reviews, as appropriate, into the SSA report, which was the foundation for the proposed rule and this final rule.

I. Final Listing Determination

Background

A thorough review of the taxonomy, life history, and ecology of the Big Creek crayfish and the St. Francis River crayfish is presented in the SSA report (Service 2022, entire).

The Big Creek crayfish (*Faxonius peruncus*) is a small, olive-tan crayfish with blackish blotches and specks over the upper surface of pincers, carapace, and abdomen. Length of adult individuals ranges from 1.1 to 2.2 inches (in) (2.8 to 5.6 centimeters (cm)). The St. Francis River crayfish (*Faxonius quadruncus*) is a small, dark brown crayfish with blackish blotches or specks over the upper surfaces of the pincers, carapace, and abdomen. Lengths of adult individuals of St. Francis River crayfish have been observed to be similar to adult Big Creek crayfish.

Both the Big Creek crayfish and the St. Francis River crayfish have localized distributions in the Upper St. Francis River watershed upstream of Wappapello Dam in Iron, Madison, St. Francois, Washington, and Wayne Counties in southeastern Missouri (see figure 1, below). The Big Creek crayfish appears most abundant in Big Creek and other streams on the west side of the watershed, as well as in the Twelvemile Creek subwatersheds on the east side; the St. Francis River crayfish mainly inhabits the upper St. Francis River tributaries on the upper end of the Upper St. Francis River watershed. Despite occupying the Upper St. Francis River watershed at a coarse spatial scale, these two species have been observed at the same location only seven times and exhibit mostly discrete distributions (Westhoff 2011, pp. 34–36).

Big Creek crayfish are generally found in streams with widths less than 33 feet (ft) (10 meters (m)) under small rocks or in shallow burrows in headwater streams and small rocky creeks in shallow depths. St. Francis River crayfish are generally found in swiftly moving streams under rocks and boulders in small headwater streams and up to moderately larger rivers. St. Francis River crayfish may prefer pool/backwater areas and run macrohabitats over faster riffles.

Given that both the Big Creek crayfish and St. Francis River crayfish are habitat generalists (Westhoff 2017, pers. comm.) and not all reaches of streams within the watershed have been sampled, it is likely that the species occur at more locations in the watershed. Therefore, we defined the species' ranges as the streams within subwatersheds (12-digit hydrologic units) known to be occupied by each species. We consider these ranges to be a more accurate depiction of the actual ranges of the Big Creek crayfish and St. Francis River crayfish than using only known locations. Within the St. Francis River mainstem (where it is a 5th order stream), the Big Creek crayfish also intermittently occurs in 86 river miles (rmi) (139 river kilometers (km)), and the St. Francis River crayfish occurs in 99 rmi (159 km). Thus, the Big Creek crayfish is found in 1,069 rmi (1,720 km) and the St. Francis River Crayfish is found in 1,043 rmi (1,679 km) in the Upper St. Francis watershed.

Individuals of the Big Creek crayfish and St. Francis River crayfish mate in the fall. Big Creek crayfish females generate an average of 61 eggs, and St. Francis River crayfish females generate an average of 43 to 81 eggs (Pflieger 1996, pp. 116, 122). The normal lifespan for both the Big Creek crayfish and the St. Francis River crayfish appears to be about 2 years (Pflieger 1996, pp. 116, 122). We presume that both species' feeding habits are similar to those of other crayfish species in the region, and their diets likely consist of plant detritus, periphyton, and invertebrates.

Based on genetic analyses (Fetzner and DiStefano 2008, pp. 12–15), we consider the Big Creek crayfish species to consist of two populations (referred to as the Main and Twelvemile Creek populations), whereas the St. Francis River crayfish species consists of a single population (see figure 1, below). We have no evidence to indicate that there has been a reduction in the number of populations for either species from historical conditions. For analytical purposes and for better representation of groups of individuals that occupy the same area and are subject to the same environmental pressures, we defined finer-scale subpopulations. We consider a subpopulation to be those individuals that are able to interbreed and occur within the same stream reach of occupied habitat. Therefore, multiple subpopulations make up the single population (and species) of the St. Francis River crayfish, and multiple subpopulations make up the two populations of the Big Creek crayfish. For Big Creek crayfish and St. Francis River crayfish subpopulations to be healthy, they require a population size and growth rate sufficient to withstand natural environmental fluctuations and habitat of sufficient quantity and quality to support all life stages (specific details of each of these requirements remains unclear). Healthy subpopulations of each species also require gene flow among subpopulations and a native community structure free from nonnative crayfish species that may outcompete and ultimately displace the two species (for more information, see chapter 2 of the SSA report).

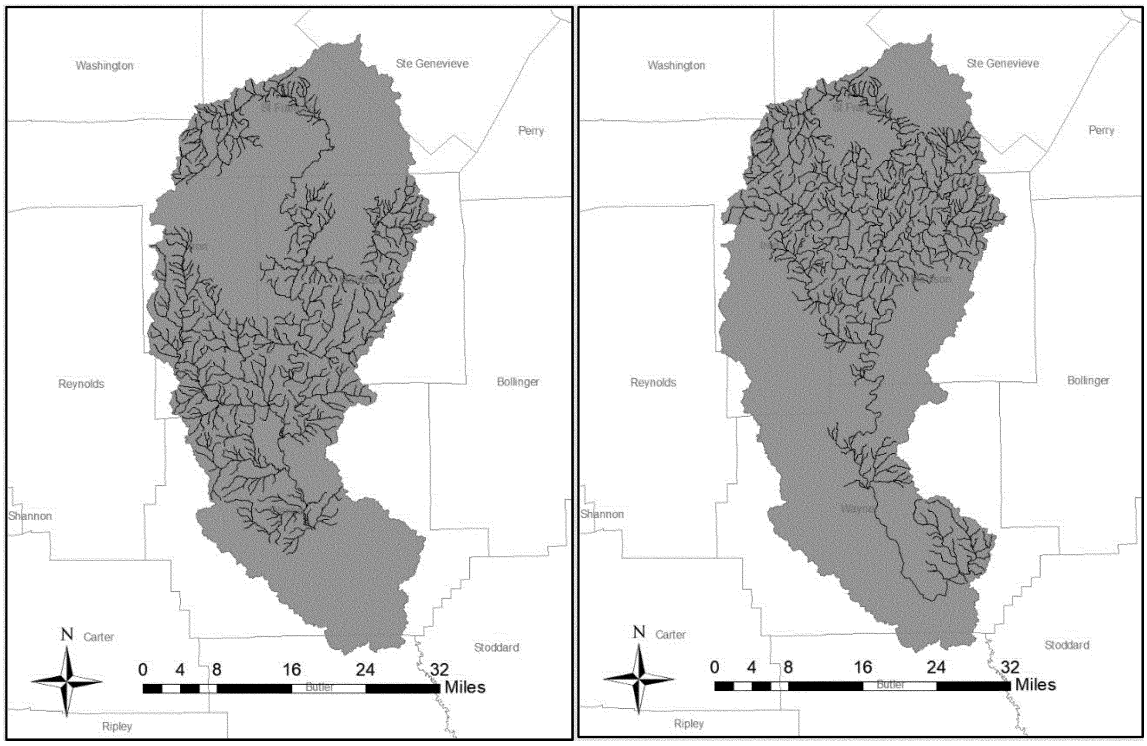

Figure 1. Range of the Big Creek crayfish (left) and St. Francis River crayfish (right) in Missouri.

Regulatory and Analytical Framework

Regulatory Framework

Section 4 of the Act (16 U.S.C. 1533) and the implementing regulations in title 50 of the Code of Federal Regulations set forth the procedures for determining whether a species is an endangered species or a threatened species, issuing protective regulations for threatened species, and designating critical habitat for endangered and threatened species. In 2019, jointly with the National Marine Fisheries Service, the Service issued a final rule that revised the regulations in 50 CFR part 424 regarding how we add, remove, and reclassify endangered and threatened species and the criteria for designating listed species' critical habitat (84 FR 45020; August 27, 2019). On the same day, the Service also issued final regulations that, for species listed as threatened species after September 26, 2019, eliminated the Service's general protective regulations automatically applying to threatened species the prohibitions that section 9 of the Act applies to endangered species (84 FR 44753; August 27, 2019).

The Act defines an ''endangered species'' as a species that is in danger of extinction throughout all or a significant portion of its range, and a ''threatened species'' as a species that is likely to become an endangered species within the foreseeable future throughout all or a significant portion of its range. The Act requires that we determine whether any species is an endangered species or a threatened species because of any of the following factors:

(A) The present or threatened destruction, modification, or curtailment of its habitat or range;

(B) Overutilization for commercial, recreational, scientific, or educational purposes;

(C) Disease or predation;

(D) The inadequacy of existing regulatory mechanisms; or

(E) Other natural or manmade factors affecting its continued existence.

These factors represent broad categories of natural or human-caused actions or conditions that could have an effect on a species' continued existence. In evaluating these actions and conditions, we look for those that may have a negative effect on individuals of the species, as well as other actions or conditions that may ameliorate any negative effects or may have positive effects.

We use the term ''threat'' to refer in general to actions or conditions that are known to or are reasonably likely to negatively affect individuals of a species. The term ''threat'' includes actions or conditions that have a direct impact on individuals (direct impacts), as well as those that affect individuals through alteration of their habitat or required resources (stressors). The term ''threat'' may encompass—either together or separately—the source of the action or condition or the action or condition itself.

However, the mere identification of any threat(s) does not necessarily mean that the species meets the statutory definition of an ''endangered species'' or a ''threatened species.'' In determining whether a species meets either definition, we evaluate all identified threats by considering the expected response by the species and the effects of the threats—in light of those actions and conditions that will ameliorate the threats—on an individual, population, and species level. We evaluate each threat and its expected effects on the species, then analyze the cumulative effect of all of the threats on the species as a whole. We also consider the cumulative effect of the threats in light of those actions and conditions that will have positive effects on the species, such as any existing regulatory mechanisms or conservation efforts. The Secretary determines whether the species meets the definition of an ''endangered species'' or a ''threatened species'' only after conducting this cumulative analysis and describing the expected effect on the species now and in the foreseeable future.

The Act does not define the term ''foreseeable future,'' which appears in the statutory definition of ''threatened species.'' Our implementing regulations at 50 CFR 424.11(d) set forth a framework for evaluating the foreseeable future on a case-by-case basis. The term ''foreseeable future'' extends only so far into the future as the Services can reasonably determine that both the future threats and the species' responses to those threats are likely. In other words, the foreseeable future is the period of time in which we can make reliable predictions. ''Reliable'' does not mean ''certain''; it means sufficient to provide a reasonable degree of confidence in the prediction. Thus, a prediction is reliable if it is reasonable to depend on it when making decisions. It is not always possible or necessary to define foreseeable future as a particular number of years. Analysis of the foreseeable future uses the best scientific and commercial data available and should consider the timeframes applicable to the relevant threats and to the species' likely responses to those threats in view of its life-history characteristics. Data that are typically relevant to assessing the species' biological response include species-specific factors such as lifespan, reproductive rates or productivity, certain behaviors, and other demographic factors.

Analytical Framework

The SSA report documents the results of our comprehensive biological review of the best scientific and commercial data regarding the status of the species, including an assessment of the potential threats to the species. The SSA report does not represent our decision on whether the species should be listed as an endangered or threatened species under the Act. However, it does provide the scientific basis that informs our regulatory decisions, which involve the further application of standards within the Act and its implementing regulations and policies.

To assess the viability of the Big Creek crayfish and the St. Francis River crayfish, we used the three conservation biology principles of resiliency, redundancy, and representation (Shaffer and Stein 2000, pp. 306–310). Briefly, resiliency supports the ability of the species to withstand environmental and demographic stochasticity (for example, wet or dry, warm or cold years), redundancy supports the ability of the species to withstand catastrophic events (for example, droughts, large pollution events), and representation supports the ability of the species to adapt over time to long-term changes in the environment (for example, climate changes). In general, the more resilient and redundant a species is and the more representation it has, the more likely it is to sustain populations over time, even under changing environmental conditions. Using these principles, we identified the species' ecological requirements for survival and reproduction at the individual, population, and species levels, and described the beneficial and risk factors influencing the species' viability.

The SSA process can be categorized into three sequential stages. During the first stage, we evaluated the individual species' life-history needs. The next stage involved an assessment of the historical and current condition of the species' demographics and habitat characteristics, including an explanation of how the species arrived at its current condition. The final stage of the SSA involved making predictions about the species' responses to positive and negative environmental and anthropogenic influences. Throughout all of these stages, we used the best available information to characterize viability as the ability of a species to sustain populations in the wild over time. We use this information to inform our regulatory decision.

The following is a summary of the key results and conclusions from the SSA report; the full SSA report can be found at Docket No. FWS–R3–ES–2019–0020 on *https://www.regulations.gov.*

Summary of Biological Status and Threats

In this discussion, we review the biological condition of the species and its resources, and the threats that influence the species' current and future condition, in order to assess the species' overall viability and the risks to that viability.

The primary threat to the future viability of the Big Creek crayfish and the St. Francis River crayfish is displacement by a nonnative crayfish species (woodland crayfish). Currently, no means to slow or stop the spread of the woodland crayfish exist. Contamination from heavy metal mining and habitat degradation from sedimentation also affect the species' viabilities. A brief summary of these stressors is presented below; for a full description of these stressors, refer to chapter 3 of the SSA report for each species (USFWS 2022, pp. 13–22).

Nonnative Crayfish

The introduction of nonnative crayfish is one of the primary factors contributing to declining crayfish populations (Taylor et al. 2007, p. 374). Nonnative crayfish species can displace native crayfishes through competition, differential predation, reproductive interference or hybridization, disease transmission, or a combination of these mechanisms (Lodge *et al.* 2000, pp. 9, 12).

Reproductive interference in the form of hybridization may be the main mechanism driving the displacement of the Big Creek crayfish and the St. Francis River crayfish. Woodland crayfish have been observed engaging in mating behavior with St. Francis River crayfish (Westhoff 2011, p. 117). There is also genetic evidence of hybridization between the woodland crayfish and the Big Creek crayfish, as well as between the woodland crayfish and the St. Francis River crayfish (Fetzner et al. 2016 pp. 19–26). Alleles from both parental species have been detected in individuals in areas invaded by the woodland crayfish, which suggest that both native species readily hybridize with the woodland crayfish (Fetzner *et al.* 2016, p. 28). Genetic swamping (a process by which the local genotype is replaced) appears to be the mechanism that leads to the eventual full displacement of the native species of crayfish, as at least some of the hybrid young appear to be viable (Fetzner *et al.* 2016, p. 29).

In 1984, the woodland crayfish, endemic to southeastern Missouri, was first documented in the Upper St. Francis River watershed, which is outside of its native range (Pflieger 1996, p. 82). It is estimated that by 2008 (22 years later), the crayfish had invaded 5 to 20 percent of the total 3,225 rmi in the watershed (DiStefano and Westhoff 2011, p. 40). Within areas invaded by the woodland crayfish, the distribution and abundance of the Big Creek crayfish and St. Francis River crayfish have been substantially impacted. In one stream, the Big Creek crayfish constituted 87 percent of the crayfish community in areas not invaded by the woodland crayfish, but only 27 percent in invaded areas (DiStefano and Westhoff 2011, p. 40). Similarly, the St. Francis crayfish constituted 50 percent of the crayfish community in uninvaded areas, but only 13 percent in invaded areas of the stream. In the invaded areas of these streams, the woodland crayfish had become the dominant species, constituting 57 to 86 percent of the crayfish community (DiStefano and Westhoff 2011, p. 40).

The woodland crayfish's impact on abundance of the Big Creek crayfish and St. Francis River crayfish has resulted in the range contraction of both of the native species. In one stream, the range of the Big Creek crayfish contracted 9.1 rmi (14.7 km) from 2004 to 2009, simultaneously with the woodland crayfish's expansion in the stream (DiStefano and Westhoff 2011, p. 40). In three other streams, the range of the St. Francis River crayfish contracted in conjunction with the woodland crayfish's invasion (Riggert et al. 1999, p. 1999; DiStefano 2008, p. 419).

The known locations of the woodland crayfish are likely an under-representation of where the species is present in the watershed, given that: (1) The majority of locations were documented prior to 2010, and the species can expand at a rate as high as 745 yards (yd) per year (681 meters (m) per year) in the upstream direction and 2,499 yd per year (2,285 m per year) in the downstream direction (DiStefano and Westhoff 2011, pp. 38, 40); and (2) the woodland crayfish has already been introduced at several locations throughout the watershed and has likely been introduced at additional, undocumented locations (it is not feasible to survey every stream throughout the watershed).

Contamination by Heavy Metal Mining

Approximately 22 percent of the Big Creek crayfish's range and 16 percent of the St. Francis River crayfish's range occur in areas with contaminated soil. Southeastern Missouri has been a primary producer of lead since the early 1700s, in an area referred to as the Old Lead Mining Belt, and more recently in an area referred to as the New Lead Mining Belt. Although most mining ceased in the 1970s, waste from mining operations is still present in the landscape, resulting in contamination of fish and other aquatic biota, alteration of fish and invertebrate communities, and public health advisories against human consumption of lead-contaminated fish (Czarneski 1985, pp. 17–23; Schmitt *et al.* 1993, pp. 468–471). The relocation of mine waste (chat) throughout the area as topsoil, fill material, and aggregate for roads, railroads, concrete, and asphalt has further expanded the area of contamination, as has aerial deposition from heavy metal smelters and the use of lead mining tailings for agricultural purposes due to their lime content (NASEM 2017, pp. 25–37). All of these uses have contributed to contamination of streams in portions of the Upper St. Francis River watershed. As a result, 24.2 rmi (38.9 km) of the Little St. Francis River are currently included in the Environmental Protection Agency's (EPA) 303(d) list of impaired waters for not meeting water quality standards for lead (EPA 2020, p. 28; MDNR 2020, p. 8). In 2012, a portion of Big Creek (34.1 rmi; 54.9 km) was added to the EPA's 303(d) list for not meeting water quality standards for lead and cadmium. That stream reach recently was removed from the 303(d) list for lead (in sediment) due to remediation efforts, but 1.8 rmi (2.9 km) remain listed for cadmium (EPA 2020, p. 16).

Studies conducted in southeastern Missouri and other areas demonstrate that heavy metal contamination adversely affects riffle-dwelling crayfish. In a study conducted in a watershed adjacent to that of the Upper St. Francis River, metal concentrations in crayfish at sites downstream of mining activities were significantly higher than those at reference sites (Allert *et al.* 2008, pp. 100–101). Significantly lower crayfish densities were observed at sites downstream of mining activities than those at reference sites, indicating that metals associated with mining activities have negative impacts on crayfish populations in Ozark streams (Allert *et al.* 2008, p. 100). Similar results were observed in other areas impacted by mining wastes (including sites in the Upper St. Francis River watershed), with sites downstream of mining activities having significantly higher metal concentrations in crayfish, reduced densities of crayfish (from 80 to 100 percent) (Allert et al. 2008, pp. 100–101; Allert et al. 2013, p. 567), and significantly lower survivorship. The mechanisms by which crayfish can be impacted by heavy metal contamination include interference with orienting (Hubschman 1967, pp. 144–147; Lahman et al. 2015, pp. 443–444), inhibition of respiration or aerobic metabolism, and increased susceptibility to predation.

Sedimentation

Crayfish presence is dependent on rocks embedded in little or no sediment and open interstitial spaces (Loughman *et al.* 2016, p. 645; Loughman *et al.* 2017, p. 5). There is little gravel accumulation in the Upper St. Francis River watershed due to the surrounding geology. Streambank soils also are less likely to erode than in most Ozark streams because of these lower densities of gravel. Thus, stream channel substrates contain a significant proportion of stable cobble, stone, and boulders, which provide habitat for crayfishes (Boone 2001, p. GE1). However, similar to many Ozark streams, streams within the Upper St. Francis River watershed may experience increased sedimentation in the future if land uses change or if riparian corridors are cleared. Three streams within the watershed have experienced excessive sedimentation due to eroding or breached mine tailings (Boone 2001, p. WQ4; DiStefano 2008, p. 191). Breaches can allow a large volume of tailings to enter a stream, such as the 1,500 cubic yd (1,200 cubic m) spilled into a stream

in 1992 (Boone 2001, p. WQ4), and it can take multiple years for the aquatic community to begin to recover following a breach. Excessive deposition of fine sediment from tailings or other sources can cover rocks and cavities used by the Big Creek crayfish and St. Francis River crayfish as refugia (an area in which a population of organisms can survive through a period of unfavorable conditions). The loss of refugia likely results in reduced foraging habitat, thereby reducing carrying capacity and the density of subpopulations. The loss of refugia may also increase competition with the woodland crayfish and potentially facilitate displacement of the Big Creek crayfish and St. Francis River crayfish. The loss of refugia, caused by sedimentation, likely also increases predation risk.

Cumulative Effects

In addition to individually affecting the species, it is likely that several of the risk factors summarized above are acting synergistically or additively on both species. The combined impact of multiple stressors is likely more harmful than a single stressor acting alone. For example, in areas affected by lead mining contamination, the rate of displacement of Big Creek crayfish and St. Francis River crayfish by woodland crayfish may increase. Although lead contamination may have negative effects on woodland crayfish as well, we anticipate cumulative synergistic effects in areas where woodland crayfish have invaded and lead mining contamination is present. Additionally, in areas invaded by the woodland crayfish, the loss of refugia from sedimentation may increase competition between the native species and the woodland crayfish. The combination of stressors acting on the Big Creek crayfish and the St. Francis River crayfish will likely impact them more severely in combination than any one factor alone.

We note that, by using the SSA framework to guide our analysis of the scientific information documented in the SSA report, we have not only analyzed individual effects on the species, but we have also analyzed their potential cumulative effects. We incorporate the cumulative effects into our SSA analysis when we characterize the current and future condition of the species. To assess the current and future condition of the species, we undertake an iterative analysis that encompasses and incorporates the threats individually and then accumulates and evaluates the effects of all the factors that may be influencing the species, including threats and conservation efforts. Because the SSA framework considers not just the presence of the factors, but to what degree they collectively influence risk to the entire species, our assessment integrates the cumulative effects of the factors and replaces a standalone cumulative effects analysis.

Conservation Efforts and Regulatory Mechanisms

Monitoring and research on the Big Creek crayfish and St. Francis River crayfish have been conducted by the Missouri Department of Conservation (MDC) and various other organizations. Multiple evaluations of effects from lead mining contamination on crayfish, including the St. Francis River crayfish, have been conducted by the U.S. Geological Survey (USGS). Monitoring efforts benefit conservation efforts of the Big Creek crayfish and St. Francis River crayfish by providing information on population health and trends and on the magnitude and extent of threats; research efforts provide information on mechanisms by which threats may impact the native crayfishes.

To help curtail the spread of nonnative crayfish in Missouri, MDC amended the Wildlife Code of Missouri (Missouri Code) in 2011–2012, to increase regulations pertaining to the sale, purchase, and import of live crayfishes. While the virile crayfish (*Faxonius virilis*) may still be commercially sold in the State for live bait, all other live crayfishes can be imported, sold, or purchased in Missouri only for the purposes of human consumption or as food for captive animals kept by authorized entities (for example, research institutions/agencies, publicly owned zoos) (Missouri Code of State Regulations 2018b, pp. 6–7). This State regulation effectively bans the sale and purchase of live crayfish for bait, the import and sale of live crayfishes in pet stores, and the purchase and import of live crayfishes by schools for classroom study, all of which are vectors for crayfish invasions. It is also illegal in Missouri to release any baitfish or crayfish into public waters, except as specifically permitted by the MDC (Missouri Code of State Regulations 2018a, p. 3). These State regulations may help reduce the likelihood of future invasions of nonnative crayfishes within the Upper St. Francis River watershed. However, as the woodland crayfish has already been introduced at several locations in the watershed, these State regulations will not affect the inevitable spread of that species within the Upper St. Francis River watershed.

Approximately 41 percent of the Upper St. Francis River watershed is in Federal and State ownership, with the majority managed by the U.S. Forest Service as part of the Mark Twain National Forest. The U.S. Forest Service's management efforts benefit stream health by focusing on riparian protection and control and reduction of sediment entering streams. Other major public landowners in the watershed include the MDC, the U.S. Army Corps of Engineers, and the Missouri Department of Natural Resources. Additionally, 5.3 rmi (8.5 km) of Big Creek are designated an ''Outstanding State Resource Water.'' Missouri Outstanding State Resource Waters are high-quality waters with significant aesthetic, recreational, or scientific value and receive special protection against degradation in quality (Missouri Code of State Regulations 2018c, pp. 14, 16). These protections help maintain water quality and minimize additional sedimentation; therefore, these protections may maintain the quantity and quality of habitat of the Big Creek crayfish and St. Francis River crayfish.

The EPA has conducted, and has plans to continue, extensive remediation efforts in areas of southeastern Missouri impacted by lead mining, including the Upper St. Francis River watershed (EPA 2017, entire; EPA 2018b, entire). These efforts include sediment, soil, and mine waste removal. The EPA also has funded the development of a watershed master plan for the Little St. Francis River, located in the upper end of the watershed (EPA 2018a, entire). This plan will identify sources of pollution (related to lead mining) and measures to reduce the pollution.

Current Condition of Species

To evaluate the current (and future viability) of the Big Creek crayfish and the St. Francis River crayfish, we assessed a range of conditions to allow us to consider the species' resiliency, representation, and redundancy. For the purposes of this assessment, populations were delineated using known locations and expanded to a subwatershed scale As previously stated, we scaled down to a subpopulation level for analytical purposes, as both species have a limited number of populations. In the case of the St. Francis River crayfish, population-level ecology is also species-level ecology because genetic analyses indicate the entire species exists as a single population. Scaling down to the subpopulation level allowed us to better represent and compare groups of individuals at a finer scale. A summary of the current condition of each species

is given at the end of this section (Table 1 and Table 2).

The Big Creek crayfish and St. Francis River crayfish currently occur in 16 subwatersheds. In 2008, it was estimated that the woodland crayfish occupied 103 to 403 rmi (166 to 649 km) or 5 to 20 percent of the total 2,004 rmi (3,225 km) in the Upper St. Francis River watershed (DiStefano and Westhoff 2011, p. 40). Based on known locations of the woodland crayfish, we know that 5 of the 16 Big Creek crayfish subwatersheds have been invaded (31 percent) and 4 of the 16 St. Francis River subwatersheds have been invaded (25 percent). We also know that the invasion has resulted in extirpation of the Big Creek crayfish in 9.1 rmi (14.7 km) and of the St. Francis River crayfish in 8.5 rmi (13.7 stream km) (Figure 2). This is likely a sizable underestimate of the actual extent of both range contractions, given that data for known native range contractions represent conditions in only 2 of the 11 streams known to be invaded by the woodland crayfish (the range contractions for each species occurred in different streams).

In addition, the known locations of the woodland crayfish depicted in Figure 2 are likely an under-representation of where the species is present in the watershed given that (1) the majority of locations were documented prior to 2010, (2) the species can expand at a rate as high as 745 yards (y) per year (681 m per year) in the upstream direction and 2,499 y per year (2,285 m year) in the downstream direction (DiStefano and Westhoff 2011, pp. 38, 40) and (3) the woodland crayfish has already been introduced at several locations throughout the watershed and has likely been introduced at additional, undocumented locations (it is not feasible to survey every stream throughout the watershed). Finally, there is currently no means to slow or stop the spread of the woodland crayfish.

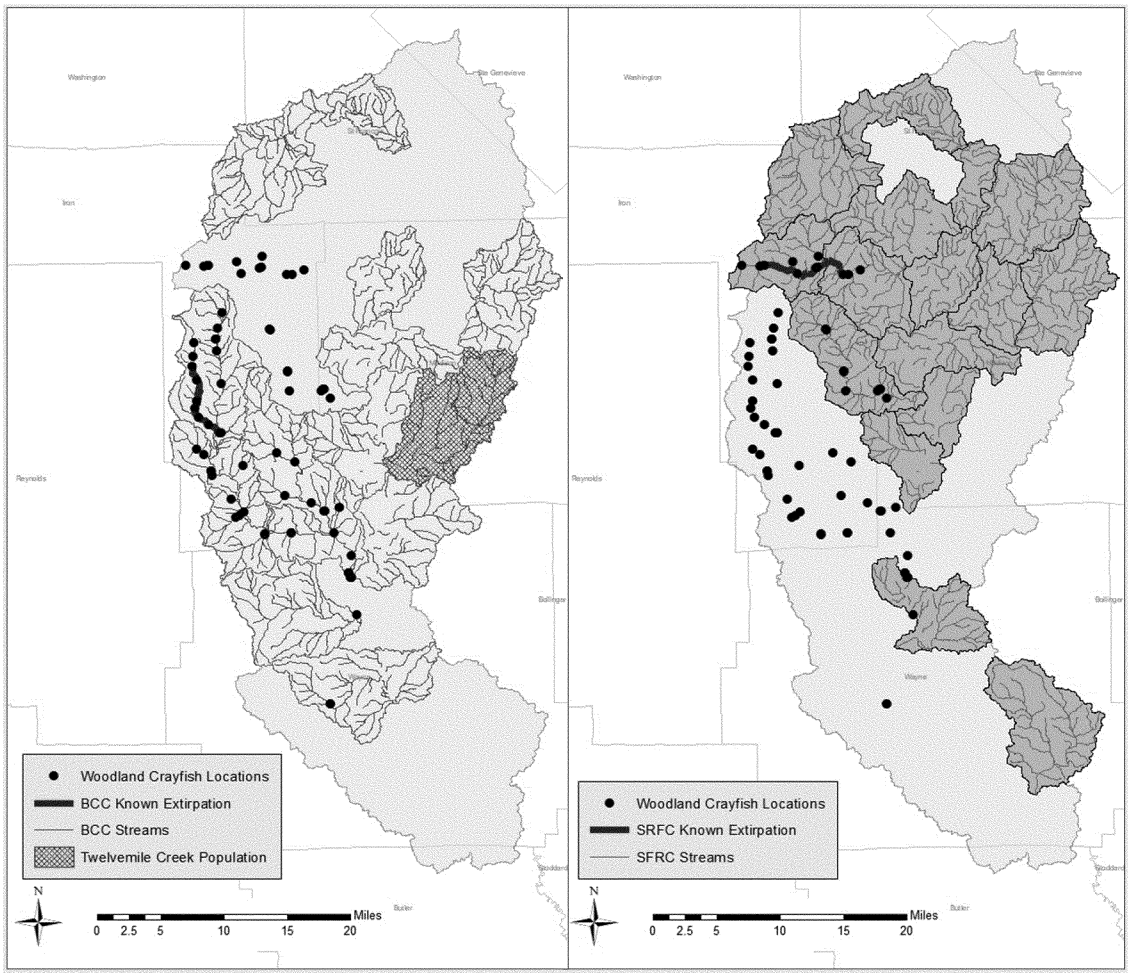

Figure 2. Known locations (as of 2018) of the Woodland Crayfish and stream segments from which the Big Creek Crayfish (BCC; left) and St. Francis River Crayfish (SFRC; right) have been extirpated due to the Woodland Crayfish invasion.

To evaluate the current condition of the Big Creek crayfish and St. Francis River crayfish in terms of the 3Rs, we reviewed available information on health of the subpopulations and queried species experts on the species' representation and redundancy. The full explanation of this analysis can be found in the SSA report; a summary of our conclusions is given below.

Resiliency

Although the Twelvemile Creek population of the Big Creek crayfish has not been invaded by the woodland crayfish, the woodland crayfish has been documented at 30 locations within the Main population, with 5 of the 14 (36 percent) of the population's subwatersheds invaded. Based on the Big Creek crayfish's range contractions

and the rate at which the woodland crayfish can expand, we expect that range contractions are happening throughout the other invaded subwatersheds. We also conclude that it is likely that St. Francis River crayfish abundance in the Main population has been substantially reduced from heavy metal contamination given that 208 rmi (335 km) of the 940 rmi (1,514 km), or 22 percent, of the population occurs in areas with heavy metal surface contamination. Studies conducted in nearby watersheds demonstrate that heavy metal contamination reduces abundance. These impacts have reduced resiliency of the Main population and thus resiliency of the Big Creek crayfish has been reduced.

Four of the 16 subwatersheds occupied by the St. Francis River crayfish (25 percent) have been invaded by the woodland crayfish. Similar to the Big Creek crayfish, we expect that contractions of the St. Francis River crayfish are occurring in these areas based on range contractions documented elsewhere and the rate at which the woodland crayfish can expand. Resiliency of the St. Francis River crayfish has been further reduced due to impacts from heavy metal contamination, with 16 percent of the range occurring in areas with heavy metal contamination.

The narrow ranges of both the Big Creek crayfish and St. Francis River crayfish also inherently make them vulnerable to environmental variation and stochastic events that could affect their entire range (for example, extreme drought or flooding).

Representation

We consider Big Creek crayfish representation as having healthy subpopulations in both the Twelvemile Creek population and the Main population, to maintain the full breadth of adaptive diversity (and, thus, adaptive capacity). There appears to be gene flow throughout most of the Big Creek crayfish's range (Fetzner and DiStefano 2008, p. 12). However, the Big Creek crayfish in the Twelvemile Creek population contain unique haplotypes (a group of alleles that are inherited from a single parent) that were not found anywhere else in the watershed (Fetzner and DiStefano 2008, p. 12). Although the Twelvemile Creek population is currently not impacted by the woodland crayfish, the range of the Main population has been reduced due to woodland crayfish invasion, with 36 percent of the subwatersheds invaded (Table 1 and Table 2). Therefore, the species may have lost some level of representation. For the St. Francis River crayfish, we consider representation as having multiple, healthy subpopulations distributed across the range of the species to maintain the breadth of adaptive diversity (that is, throughout its range in the Upper St. Francis River watershed). Similar to the Big Creek crayfish, some level of representation of the St. Francis River crayfish may have been lost due to documented and undocumented range contractions, with 4 of the 16 (25 percent) of the St. Francis River subwatersheds invaded.

Redundancy

For the purposes of the SSA, we define a catastrophic event as a biotic or abiotic event that causes significant impacts at the population level such that the population cannot rebound from the effects or the population becomes highly vulnerable to normal population fluctuations or stochastic events.

Based on expert input (further described in the SSA report), we do not consider extreme drought or chemical spills as catastrophic events that are likely to have catastrophic effects on the Big Creek crayfish and St. Francis River crayfish at the species-level. While these events may not have the devastating effects of a catastrophic event, the occurrence of extreme droughts or chemical spills would reduce resiliency of the species acting as a stressor on a more localized scale. These stressors may potentially extirpate or compromise subpopulations throughout the impacted area (see chapter 3 of the SSA report). However, both species are inherently vulnerable to extreme events or large-scale stressors given their small range, and there has been some reduction of in-population redundancy due to the extirpation of individuals (and subpopulations) in some areas because of woodland crayfish invasion.

TABLE 1—SUMMARY OF BIG CREEK CRAYFISH'S CURRENT CONDITION

	Assessment of current condition
Currently Occupied Stream Distance.	Occurs in approximately 983 rmi (1,581 km) within 16 subwatersheds. However, this does not account for documented and undocumented range contractions that we expect are occurring in 31 percent of the species' subwatersheds due to the woodland crayfish invasion. In addition, 86 rmi (139 km) of stream reaches are likely occupied intermittently by the species due to movement among occupied watersheds.
Health of Subpopulations	In areas invaded by the woodland crayfish (31 percent of occupied subwatersheds), abundance is substantially reduced, with the species completely extirpated in some invaded areas. In areas impacted by lead mining contamination (22 percent of the range), abundance is also likely reduced. In areas not invaded by the woodland crayfish or impacted by lead mining contamination, we presume subpopulations are healthy.
Health of Populations	We presume the Twelvemile Creek population is currently healthy because it does not appear that the woodland crayfish has invaded the population and the population is outside of the area of lead mining contamination. The health of the Main population, however, has been impacted due to documented and undocumented range contractions from the woodland crayfish invasion in 36 percent of the population's subwatersheds. Abundance has also likely been reduced in 22 percent of the Main population due to heavy metal contamination.
Resiliency	Reduced due to documented and undocumented range contractions in 31 percent of the Big Creek crayfish's subwatersheds and expected reduced abundance in 22 percent of the range due to heavy metal contamination.
Representation	Somewhat reduced ecological diversity due to documented and undocumented range contractions in 25 percent of the Big Creek crayfish's subwatersheds.
Redundancy	Somewhat reduced due to documented and undocumented range contractions in 36 percent of subwatersheds in the Main population. The species is also inherently vulnerable to some extreme events given its small range, However, both populations of the species have a high level of redundancy relative to extreme events that affect areas downstream of the source of the event (for example, chemical spills) due to the number of tributaries that they occupy that would not be downstream of the event.

TABLE 2—SUMMARY OF ST. FRANCIS RIVER CRAYFISH'S CURRENT CONDITION

	Assessment of current condition
Currently Occupied Stream Distance.	Occurs in approximately 944 rmi (1,519 km) within 16 subwatersheds. However, this does not account for documented and undocumented range contractions that we expect are occurring in 25 percent of the species' subwatersheds due to the woodland crayfish invasion. In addition, 99 rmi (159 km) of stream reaches are likely occupied intermittently by the species due to movement among occupied watersheds.
Health of Subpopulations	In areas invaded by the woodland crayfish (25 percent of occupied subwatersheds), abundance is substantially reduced, with the species completely extirpated in some invaded areas. In areas impacted by lead mining contamination (16 percent of the range), abundance is also likely reduced. In areas not invaded by the woodland crayfish or impacted by lead mining contamination, we presume subpopulations are healthy.
Resiliency	Reduced due to documented and undocumented range contractions in 25 percent of the St. Francis River crayfish's subwatersheds. Also reduced due to reduced abundance in 16 percent of the range due to heavy metal contamination.
Representation	Somewhat reduced ecological diversity due to documented and undocumented range contractions in 25 percent of the St. Francis River crayfish's subwatersheds.
Redundancy	Somewhat reduced due to documented and undocumented range contractions in 25 percent of the St. Francis River crayfish's subwatersheds. The species is also inherently vulnerable to some extreme events given the species' small range, and there has been some reduction in redundancy due to reduction of the range. However, the species have a high level of redundancy relative to extreme events that affect areas downstream of the source of the event (for example, chemical spills) due to the number of tributaries that they occupy that would not be downstream of the event.

Future Scenarios

For the purpose of this assessment, we define viability as the ability of the species to sustain populations in the wild over time. To evaluate future conditions of the Big Creek crayfish and St. Francis River crayfish, we predicted the expansion of the nonnative woodland crayfish within the ranges of the native crayfishes. We asked biologists with expertise on crayfishes to estimate the future expansion rate in the Upper St. Francis River watershed, the impact on Big Creek crayfish and St. Francis River crayfish abundances, and the length of time for those impacts to be fully realized. A full description of the expert elicitation meeting methodology and results are available in the SSA report (Service 2022, pp. 36–47 & 64–70). As a way to characterize uncertainty in predicting future conditions and to capture the entire breadth of plausible future conditions, we developed ''reasonable best,'' ''reasonable worst,'' and ''most likely'' scenarios that represent the plausible range of the Big Creek crayfish's and St. Francis River crayfish's future conditions (see Table 3, below). Each of the scenarios is based on the expert-elicited estimates of the woodland crayfish's expansion rates, impacts of the invasion, and time for impacts to be fully realized. For each of the scenarios, we predicted the extent of future expansion of the woodland crayfish at 10, 25, and 50 years into the future. We then calculated the extent of the Big Creek crayfish's and St. Francis River crayfish's ranges that would be affected under each scenario and described effects to abundance based on the experts' projections. Because we used a finer scale data, we present results in river miles invaded, rather than subwatersheds invaded (as we did to assess current conditions). Additional details on the expert elicitation and a summary of results can be found in appendix B of the SSA report. Below is a summary of the results from the SSA; for further details on the methods, assumptions, and results, see chapter 5 of the SSA report. A summary of predicted impacts in 50 years for both species is summarized in Tables 4 and 5 below.

TABLE 3—EXPLANATION OF SCENARIOS USED TO PREDICT THE FUTURE CONDITION OF BIG CREEK CRAYFISH AND ST. FRANCIS RIVER CRAYFISH

Scenario	Estimates used
Reasonable Best	• Lowest plausible expansion rate of the woodland crayfish • Lowest level of predicted impact on abundance of Big Creek crayfish and St. Francis River crayfish • Highest number of years for impacts to be fully realized
Reasonable Worst	• Highest plausible expansion rate of the woodland crayfish • Highest level of predicted impact on abundance of Big Creek crayfish and St. Francis River crayfish • Lowest number of years for impacts to be fully realized
Most Likely	• Most likely expansion rate of the woodland crayfish • Most likely level of predicted impact on abundance of Big Creek crayfish and St. Francis River crayfish • Most likely number of years for impacts to be fully realized

Big Creek Crayfish

Under the ''reasonable best'' scenario, we expect the woodland crayfish invasion will expand to 25 percent of the Big Creek crayfish Main population in 10 years, constituting 24 percent of the species' range. In 25 years, 35 percent of the Big Creek crayfish Main population will have been invaded, constituting 33 percent of the species' range. In 50 years, 49 percent of the Main population will be invaded, constituting 46 percent of the species' range. The Twelvemile Creek population is not predicted to be invaded in 25 or 50 years under this scenario. In areas invaded by the woodland crayfish, abundance is predicted to be reduced by over 50 percent in 10 to 20 years.

Under the ''reasonable worst'' scenario, we expect 44 percent of the Main population and 0.2 percent of the Twelvemile Creek population will be invaded by the woodland crayfish in 10 years, constituting 42 percent of the Big Creek crayfish's total range. In 25 years, 70 percent of the Main population and 81 percent of the Twelvemile Creek population will be invaded by the woodland crayfish, constituting 70 percent of the Big Creek crayfish's total range. In 50 years, 90 percent of the Main population and 100 percent of the Twelvemile Creek population will be invaded, constituting 91 percent of the species' range. In areas invaded by the woodland crayfish, abundance is

predicted to be reduced by approximately 100 percent (that is, extirpation) in less than 10 years.

Under the ''most likely'' scenario, we expect 28 percent of the Big Creek crayfish Main population will be invaded by the woodland crayfish in 10 years, constituting 27 percent of the species' range. In 25 years, 44 percent of the Main population and 6 percent of the Twelvemile Creek population will be invaded by the woodland crayfish, constituting 42 percent of the Big Creek crayfish's total range. In 50 years, 64 percent of the Main population and 56 percent of the Twelvemile Creek population will be invaded, constituting 64 percent of the species' range. The best available information indicates that once an area is invaded by the woodland crayfish, the Big Creek crayfish will be extirpated within 10 years.

Given that there are currently no known feasible measures to curtail the woodland crayfish invasion for the long term, we consider it extremely likely that the invasion will continue. Based on our use of expert-elicited estimates of the rate of expansion and the resulting impacts on the Big Creek crayfish, we are also reasonably certain that we can predict the plausible range of future conditions within 50 years. Here, we discuss the species' future condition in terms of the next 50 years (Summarized below in Table 4.); 10- and 25-year future conditions are discussed (beyond what was stated above) in the SSA report. As previously stated, resiliency of the Big Creek crayfish has already been reduced from historical conditions due to range contractions in 31 percent of occupied subwatersheds caused by invasion of the woodland crayfish. Resiliency also has likely been reduced due to lead mining contamination in 22 percent of the crayfish's range. Using the modeling results (that represent the range of all future scenarios), we predict that within 50 years resiliency of the species will continue to be reduced due to a 50 to 100 percent reduction in abundance in 49 to 90 percent of the Main population and 0 to 100 percent of the Twelvemile Creek population. In addition, if other threats (aside from woodland crayfish invasion and lead mining contamination) such as drought, flood events, disease, and degraded water quality, remain the same or increase, resiliency will be further reduced by these threats. Thus, our modeled results represent the minimum amount of the species' range that is expected to be impacted within 50 years because the decline in resiliency only considers impacts of the woodland crayfish invasion and none of the other stressors mentioned above that affect the Big Creek crayfish.

We predict that the Big Creek crayfish will continue to lose ecological diversity, given the expected expansion of the woodland crayfish and the resulting impact on subpopulations in both the Main and Twelvemile Creek populations. Both populations are expected to experience a 50 to 100 percent reduction in abundance in invaded areas. For the Twelvemile Creek population, in 50 years there may be as much as 100 percent of the population's range invaded, whereas up to 90 percent of the Main population's range may be invaded in the same time. Given the unique haplotypes contained in the Twelvemile Creek population, the reduced abundance of subpopulations in the majority of that population, or especially the complete loss of that population, would represent an appreciable reduction in the species' representation.

The Big Creek crayfish is inherently vulnerable to extreme events and other stressors, given the species' small range. There has been already been some reduction in redundancy due to documented and undocumented range contractions in 36 percent of subwatersheds in the Main population. Based on results of the future scenario modeling, we expect that within 50 years, redundancy of the Big Creek crayfish will be further reduced by the predicted 50 to 100 percent reduction in abundance in 49 to 90 percent of the range of the Main population and 0 to 100 percent of the range of the Twelvemile Creek population. Because the Twelvemile Creek population consists of only one subwatershed, it will be more vulnerable to extreme events if multiple sub-tributaries are impacted by the woodland crayfish invasion.

St. Francis River Crayfish

Under the ''reasonable best'' scenario, we expect 12 percent of the St. Francis River crayfish's range will be invaded by the woodland crayfish in 10 years. In 25 years, 21 percent of the range will have been invaded, and 33 percent of the range will have been invaded in 50 years. In areas where the woodland crayfish has invaded, abundance is predicted to be reduced by over 10 to 50 percent in 30 to 40 years.

Under the ''reasonable worst'' scenario, we expect 30 percent of the St. Francis River crayfish's range will be invaded by the woodland crayfish in 10 years. In 25 years, 56 percent of the range will have been invaded, and 81 percent of the range will have been invaded in 50 years. In areas where the woodland crayfish has invaded, abundance is predicted to be reduced by approximately 100 percent (that is, extirpation) in less than 10 years.

Under the ''most likely'' scenario, we expect 18 percent of the St. Francis River crayfish's range will be invaded by the woodland crayfish in 10 years. In 25 years, 32 percent of the range will have been invaded, and 50 percent of the range will have been invaded in 50 years. In areas where the woodland crayfish has invaded, abundance is predicted to be reduced by 50 to 100 percent in 10 to 30 years (Table 5).

Similar to the Big Creek crayfish, we are also reasonably certain that we can predict the plausible range of future conditions for the St. Francis River crayfish within 50 years because there are no known feasible measures to curtail the spread of the woodland crayfish. Here, we discuss the species' future condition over the next 50 years; 10- and 25-year future conditions are discussed (beyond what was stated above) in the SSA report. As previously stated, resiliency of the St. Francis River crayfish has already been reduced from historical conditions due to effects of the woodland crayfish invasion in 25 percent of subwatersheds occupied by the St. Francis River crayfish and also from lead mining contamination in 22 percent of the species' range. Based on the modeling results (the range of all future scenarios), we predict that resiliency of the species will continue to be reduced due to the woodland crayfish invasion and resulting 10 to 100 percent reduction in abundance in an estimated 33 to 81 percent of the range within 50 years. If threats other than the woodland crayfish and lead mining contamination, such as drought, flood events, disease and degraded water quality remain the same or increase, resiliency will be further reduced. Like the Big Creek crayfish, our modeled results represent the minimum amount of the species' range that is expected to be impacted within 50 years because the decline in resiliency only considers impacts of the woodland crayfish invasion and none of the other stressors mentioned above that affect the St. Francis River crayfish.

There has already been some loss in St. Francis River crayfish's representation due to the loss of the subpopulations (and therefore ecological diversity) impacted by the woodland crayfish invasion and impacts of lead mining contamination. The reduction in representation is expected to continue given the predicted 10 to 100 percent reduction in abundance in 33 to 81 percent of the species' range,

based on the results of all future scenarios.

The St. Francis River crayfish is inherently vulnerable to extreme events and stressors, given the species' small range and single population, and there has been some reduction in redundancy due to range reduction and reduced abundance of subpopulations due to the woodland crayfish invasion and lead mining contamination. Similar to representation, we expect that redundancy of the St. Francis River crayfish will be further reduced by the predicted 10 to 100 percent reduction in abundance in 33 to 81 percent of the species' range within 50 years as more tributaries are invaded and subpopulations are extirpated.

TABLE 4—THE RANGE OF PREDICTED IMPACTS TO THE BIG CREEK CRAYFISH FROM THE WOODLAND CRAYFISH AT 50 YEARS BASED ON EXPERT INPUT

	Reasonable best (percent)	Most likely (percent)	Reasonable worst (percent)
Percent of Main population invaded	48.7	64.1	90.4
Percent of Twelvemile Creek population invaded	0	55.6	100
Percent of total range invaded	46.2	63.7	90.9
Percent reduction in abundance in invaded areas	>50	~100	~100

TABLE 5—THE RANGE OF PREDICTED IMPACTS TO THE ST. FRANCIS RIVER CRAYFISH FROM THE WOODLAND CRAYFISH AT 50 YEARS BASED ON EXPERT INPUT

	Reasonable best (percent)	Most likely (percent)	Reasonable worst (percent)
Percent of range invaded	33.2	49.5	81.0
Percent reduction in abundance in invaded areas	10 to 50	50 to 100	~100

Summary of Comments and Recommendations

In the proposed rule published on September 17, 2020 (85 FR 58192), we requested that all interested parties submit written comments on the proposal by November 16, 2020. We also contacted appropriate Federal and State agencies, scientific experts and organizations, and other interested parties and invited them to comment on the proposal. Newspaper notices inviting public comment were published in the Democratic News (October 7, 2020) and the Farmington Press (October 1, 2020). After receiving a request for a public hearing, we reopened the public comment period on April 27, 2021 (86 FR 22127) and requested that all interested parties submit their comments by May 27, 2021. We held a virtual public informational meeting followed by a public hearing on May 13, 2021. All substantive information received during both comment periods has either been incorporated directly into this final determination or is addressed below.

Peer Reviewer Comments

As discussed in Supporting Documents, above, we received comments from one peer reviewer. We reviewed all comments we received from the peer reviewer for substantive issues regarding the information contained in the SSA report and new information about the species. The peer reviewer generally concurred with our methods and conclusions and provided additional information, clarifications, and suggestions to improve the final SSA report. Peer reviewer comments were incorporated into the final SSA report as appropriate.

Public Comments

(1) Comment: Commenters stated that the Service should consider best management practices (BMPs) for forestry activities in the assessment of conservation efforts benefitting the species and account for these beneficial actions in any analyses conducted on the species' status.

Our Response: To assess the conservation benefit provided by the forestry BMPs, we considered the extent to which the BMPs are implemented within the two crayfishes' ranges. Based on information from surrounding States, the implementation rate of BMPs in Missouri is estimated to be 82 percent, with the rate representing the number of sites at which forestry BMPs were applied correctly or where major water quality impacts were avoided (Ice et al. 2010, p. 272). However, actual rates for Missouri are not available, as implementation of forestry BMPs is not required or monitored (NASF 2019, p. 3). In particular, we have no information to determine whether the estimate in Ice et al. (2010, p. 272) is applicable within the ranges of the two crayfishes. Because we are not able to confidently assess the extent to which implementation of forestry BMPs is benefitting the species, we did not factor the conservation benefits of BMPs into the analysis conducted on the species' status. Should we obtain data on BMP implementation rates within the species' ranges, we will include that information in the next revision of the species' SSA report.

(2) Comment: Commenters stated that because the woodland crayfish is native to other watersheds in Missouri, it should not be referred to as a nonnative species and should not be considered a threat to the Big Creek crayfish or St. Francis River crayfish.

Our Response: Because the woodland crayfish is not endemic (native) to the Upper St. Francis River watershed, we consider it accurate to refer to the species as nonnative in the watershed. We also consider it accurate to characterize the woodland crayfish as a threat to the Big Creek crayfish and St. Francis River crayfish given the documented declines in their abundance in stream reaches invaded by the woodland crayfish.

(3) Comment: Commenters believe there are no data to support that hybridization with the woodland crayfish is detrimental to the Big Creek crayfish and St. Francis River crayfish.

Our Response: Although some of the hybrid individuals appear to be viable, alleles (versions of a gene) from the Big Creek crayfish and St. Francis River crayfish are typically absent at most or all of the loci (specific physical locations of genes or other DNA sequences on a chromosome) of the hybrid individuals (Fetzner et al. 2016, p. 29). The low frequency of alleles from

the native crayfishes indicates that individuals with the native crayfish alleles are experiencing lower survivorship and/or reproduction than crayfish with the woodland crayfish alleles. Thus, the distribution of alleles within stream reaches invaded by the woodland crayfish is expected to shift towards the alleles of the woodland crayfish and away from those of the Big Creek crayfish and St. Francis River crayfish.

(4) Comment: Historical mining activities within the Upper St. Francis River watershed are not negatively affecting crayfish if the woodland crayfish is expanding its range within the watershed.

Our Response: The woodland crayfish's expansion in the watershed has been documented in areas other than those with heavy metal contamination. Therefore, it is possible for woodland crayfish abundance to be reduced in contaminated stream reaches while simultaneously expanding its range within the rest of the watershed.

(5) Comment: A commenter said remediation activities for heavy metal contamination have improved water quality in certain areas of the crayfishes' ranges from historical conditions. Therefore, the Service's assertion that heavy metal mining activities have affected crayfish abundance is not supported.

Our Response: Remediation activities have improved water quality in some areas of the crayfishes' ranges. However, we expect that abundance is still lower in these areas due to the time required for crayfishes to repopulate the affected stream reaches. In addition, heavy metal contamination is still present in more than 24 miles of the Little St. Francis River due to lead and 1.8 miles of Big Creek due to cadmium, as evidenced by the inclusion of these areas on the EPA's 303(d) list of impaired waterbodies (EPA 2020, pp. 16, 28).

(6) Comment: A commenter stated results of studies evaluating effects to crayfish from heavy metal exposure cannot be extrapolated to areas outside of where the studies were conducted.

Our Response: Various water chemistry parameters, such as water hardness and alkalinity, can influence bioavailability (the extent to which a chemical is absorbed) and toxicity of metals. However, heavy metal concentrations in tissue are representative of bioavailability since the concentrations represent the amount to heavy metals absorbed by crayfish. In the northeast portion of the Upper St. Francis River watershed (within the two crayfishes' ranges), Allert *et al.* (2016) documented heavy metal concentrations in crayfish tissue that were either higher than or comparable to the crayfish tissue concentrations documented in several of the other studies cited in the SSA report and the proposed rule (Allert *et al.* 2008, 2009, 2012). Total chronic toxic unit scores in the Upper St. Francis River watershed study also were either higher than or comparable to those in most of the other studies (Allert *et al.* 2009, 2012, 2013), with the scores representing the combined toxicity of metals given water hardness and the extent to which the metals dissolve in water (making the metals available for absorption by aquatic species). Lastly, Allert *et al.* (2016) documented significantly reduced densities of crayfish, including the St. Francis River Crayfish, downstream of mining sites and in some areas, a complete absence of crayfish, providing direct evidence that heavy metal exposure is negatively affecting crayfish in the Upper St. Francis River watershed.

(7) Comment: One commenter asserted that contamination due to heavy metal mining should not be considered a primary threat to the two crayfishes and that activities related to heavy metal mining should not be included in the list of prohibitions in the 4(d) rule for the species because the commenter does not consider it appropriate to use results of two studies (Allert *et al.* 2009 and Allert *et al.* 2010) to assess impacts to the Big Creek crayfish and St. Francis River crayfish from heavy metal exposure for reasons detailed below in *(7a)–(7e) Comments.* We address this commenter's specific assertions regarding the use of those two studies below.

(7a) Comment: Physical conditions such as substrate coarseness, water depth, and current velocity differed between reference and study sites and could explain the differences in crayfish densities observed.

Our Response: In a separate study, Allert *et al.* (2008, p. 105), documented significantly lower crayfish densities at mining sites, despite mining and reference sites having similar temperature, physical habitat, and organic matter. Crayfish densities did not correlate with any of the physical habitat variables that were measured (Allert *et al* 2008, p. 104). In addition, Allert *et al.* (2009, pp. 1209, 1213) documented significantly reduced crayfish survival downstream of mining sites when caging crayfish in situ (in the wild as opposed to a laboratory setting) with the same substrate and organic material as reference sites. These results are consistent with other studies documenting reduced crayfish densities and survival downstream of mining sites.

(7b) Comment: Two of the study sites were downstream of a city, and contaminants other than heavy metals were not assessed. Instead of heavy metal exposure, inputs from the city's residential, commercial, and industrial activities, as well as the agricultural uses surrounding the city, may have caused the reduced crayfish abundance.

Our Response: Multiple studies have demonstrated that, regardless of proximity to cities, crayfish have elevated heavy metal concentrations, reduced densities, and reduced survival downstream of mining sites (Allert *et al.* 2008, pp. 100–105; Allert *et al.* 2009, pp. 1210–1213; Allert *et al.* 2013, pp. 512–515). These results provide multiple lines of evidence that heavy metal exposure does negatively affect crayfish, regardless of proximity to cities.

(7c) Comment: Because macroinvertebrate populations vary significantly over small spatial scales, it cannot be concluded that heavy metal exposure caused the reduced crayfish abundance at study sites.

Our Response: As noted above, multiple lines of evidence demonstrate that heavy metal exposure negatively affects crayfish. The large number of studies documenting reduced macroinvertebrate populations downstream of mining sites, combined with heavy metal concentrations in macroinvertebrates downstream of mining sites, indicates that heavy metal exposure is responsible for the reduced crayfish densities downstream of mining sites documented by Allert *et al.* (2008, pp. 100–104; 2012, p. 569; 2013, p. 512).

(7d) Comment: Heavy metal levels were measured in fine sediment obtained from depositional areas. However, crayfish predominantly occupy riffles. Therefore, it is not appropriate to correlate heavy metal concentrations in fine sediment with crayfish densities.

Our Response: Allert *et al.* (2009, p. 1210) and Allert *et al.* (2010, p. 8) evaluated heavy metal concentrations in riffle crayfish tissue as well as in sediment. For both studies, heavy metal concentrations were higher in sediment and in crayfish tissue downstream of mining sites, with crayfish downstream of mining sites in the 2010 study having 100 to 200 times higher concentrations of lead than crayfish at reference sites (Allert *et al.* 2010, p. 19). Crayfish densities were significantly lower in areas with higher heavy metal concentrations in sediment and also in areas with higher heavy metal

concentrations in crayfish tissue (Allert *et al.* 2010, p. 28).

(7e) Comment: To assess heavy metal concentrations in sediment, Allert *et al.* (2009 and 2010) sieved the sediment to remove particles larger than 2 millimeters. The process of sieving the sample to concentrate sediments biased the sampling results.

Our Response: As noted above, Allert *et al.* 2010 (entire) assessed heavy metal concentrations in crayfish as well as in sediment and found a significant negative correlation of both with crayfish density (Allert *et al.* 2010, p. 28). Allert *et al.* 2009 (p. 1213) also found a significant negative correlation between heavy metal concentrations in crayfish and crayfish survival. These results are consistent with other studies documenting reduced crayfish density in areas downstream of mining sites. Therefore, negative effects from heavy metal exposure can be concluded even without the sediment data.

(8) Comment: A public commenter stated that lead is no longer a concern in Big Creek, and lead is not listed as a pollutant for the stream on the EPA's current list of impaired streams under section 303(d) of the Clean Water Act (33 U.S.C. 1251 *et seq.*). Although 1.8 miles of the stream is currently listed for cadmium, the listing is predominantly based on older data ranging from 2008–2012, and values only slightly exceed the chronic water quality standard. Therefore, heavy metal mining should not be included in the list of prohibitions in the 4(d) rule for the species.

Our Response: We have noted that the extent of Big Creek listed as impaired under section 303(d) of the Clean Water Act is only 1.8 miles and that lead is no longer listed as a pollutant for the waterbody. Because heavy metal contamination remains a factor influencing the crayfishes elsewhere in the watershed, however, we are retaining heavy metal mining in the list of prohibitions in the 4(d) rule for the species.

(9) Comment: A commenter stated the Service should add an exception to the prohibitions in the proposed 4(d) rule for the discharge or other introduction of heavy metals conducted in compliance with relevant Federal and State permits.

Our Response: Under the Act's section 4(d), whenever a species is listed as a threatened species, the Secretary issues regulations as she deems necessary and advisable to provide for the conservation of the listed species. As we discuss above, mining activities can increase heavy metal exposure in downstream stream reaches, and results of multiple studies indicate that the heavy metal exposure significantly reduces crayfish survival and abundance (Allert *et al.* 2008, pp. 100–104; 2012, p. 569; 2013, p. 512). Thus, we consider regulating take from mining activities as necessary and advisable for conserving the Big Creek crayfish and the St. Francis River crayfish. As such, we include a prohibition on activities that lead to the introduction of heavy metals into streams, such as heavy metal mining, in the 4(d) rule for these species.

(10) Comment: A public commenter stated because the declines of these two crayfishes appear to be directly attributed to the woodland crayfish, most of the prohibitions in the 4(d) rule should be removed, except for those directly aimed at slowing the spread of the woodland crayfish.

Our Response: Although invasion by the woodland crayfish is the primary factor causing the species' population declines, additional stressors that affect crayfishes' reproduction or survival make the species less viable. Lowered viability, in turn, results in the crayfishes being more susceptible to displacement by the woodland crayfish. Therefore, prohibiting take from these additional stressors will maximize the species' ability to withstand woodland crayfish invasion. As such, prohibiting take from these additional stressors is considered necessary and advisable, and these prohibitions are included in the 4(d) rule for the species.

(11) Comment: One commenter stated that because the woodland crayfish is the primary factor impacting the two crayfish species, the critical habitat designation will not help to conserve the species. Another commenter asserted that, given the economic impact of designating critical habitat and the minimal conservation benefit, the Service should not designate critical habitat.

Our Response: Under section 4(a)(3)(A) of the Act, the Secretary shall, to the maximum extent prudent and determinable, concurrently with making a determination that a species is an endangered species or a threatened species, designate critical habitat for that species. We have determined that designating critical habitat is both prudent and determinable for the Big Creek crayfish and the St. Francis River crayfish. Therefore, as required by the Act, we proposed to designate as critical habitat those areas occupied by the species at the time of listing and that contain the physical or biological features essential for the conservation of the species, which may require special management considerations or protection.

We are making a determination based on the best scientific data available and after taking into consideration the economic impact, the impact on national security, and any other relevant impact, of specifying any particular area as critical habitat, as required by section 4(b)(2) of the Act. Our consideration of the economic impacts of the designation are laid out in our economic analysis, as summarized in a memorandum produced by Industrial Economics, Incorporated (IEc) (IEc 2019, entire).

We are not relieved of our statutory obligation to designate critical habitat based on the contention that it will not provide additional conservation benefit. We also do not agree with the assertion that critical habitat will not help conserve the species. Habitat-based threats have been identified as affecting the current and future conditions of these species. Consultations with Federal agencies (and those projects with a Federal nexus) will provide additional conservation benefit. For more information, see the discussion under Summary of Biological Status and Threats, above. If any area provides the physical or biological features essential to the conservation of the species, that area qualifies as critical habitat under the statutory definition of that term (see section 3(5)(A) of the Act) if special management considerations or protection are needed.

(12) Comment: One commenter believes the economic analysis for the proposed designation of critical habitat does not address all of the incremental costs from the designation, particularly costs to those who currently discharge to streams occupied by the two species.

Our Response: In our economic analysis, we incorporated the incremental costs from section 7 consultations associated with the regulation of discharges in our discussion of the Clean Water Act and how discharges are regulated. Regardless of the listing status or designation of critical habitat for the Big Creek crayfish and St. Francis River crayfish, anyone who wishes to discharge dredge or fill material into Big Creek crayfish and St. Francis River crayfish habitat must obtain a permit from the U.S. Army Corps of Engineers (Corps). Under the Clean Water Act, the EPA also implements pollution control programs, such as setting standards for wastewater and other point sources discharges and sets water quality standards for all contaminants in surface waters. Under section 7 of the Act, Federal agencies are required to consult with the Service to ensure that

any action the agencies authorize, fund, or carry out is not likely to jeopardize the continued existence of any endangered species or threatened species or result in the destruction or adverse modification of habitat of such species that is determined by the Secretary to be critical habitat. Issuance of permits by the Corps, implementation of pollution control programs by the EPA, and creation of water quality standards by the EPA all constitute Federal actions and thus require section 7 consultation on the effects on the species, regardless of whether critical habitat is designated. The incremental costs (costs beyond those attributable to a species' listing) associated with section 7 consultations on critical habitat were found to be limited to administrative costs. A further explanation of the incremental costs of section 7 consultations can be found in the screening analysis memorandum for the Big Creek crayfish and the St. Francis River crayfish (IEc 2019, section 3).

Determination of Big Creek Crayfish's and St. Francis River Crayfish's Status

Section 4 of the Act (16 U.S.C. 1533) and its implementing regulations (50 CFR part 424) set forth the procedures for determining whether a species meets the definition of an endangered species or a threatened species. The Act defines an ''endangered species'' as a species that is in danger of extinction throughout all or a significant portion of its range, and a ''threatened species' as a species that is likely to become an endangered species within the foreseeable future throughout all or a significant portion of its range. The Act requires that we determine whether a species meets the definition of endangered species or threatened species because of any of the following factors: (A) The present or threatened destruction, modification, or curtailment of its habitat or range; (B) overutilization for commercial, recreational, scientific, or educational purposes; (C) disease or predation; (D) the inadequacy of existing regulatory mechanisms; or (E) other natural or manmade factors affecting its continued existence.

Status Throughout All of Its Range

After evaluating threats to the species and assessing the cumulative effect of the threats under the Act's section 4(a)(1) factors, we found that both the Big Creek crayfish and the St. Francis River crayfish face threats from a nonnative crayfish invasion (Factor E) and declines in water quality (due to heavy metal mining, sedimentation, etc.) (Factor A). These threats continue to impact the species despite the existing regulatory mechanisms (Factor D) and on-going conservation efforts. Given current and predicted future decreases in resiliency, populations will become more vulnerable to extirpation from stochastic events, thereby resulting in concurrent losses in representation and redundancy. The range of plausible future scenarios for the Big Creek crayfish and the St. Francis River crayfish suggests significant reductions in viability into the future (USFWS 2022, pp. 39–43).

In 2008, the woodland crayfish, which is not native to the Upper St. Francis River watershed, was estimated to occupy between 103 and 403 rmi (166 to 649 km) in 5 to 20 subwatersheds. Based on known locations of the woodland crayfish, we know that 5 of the 16 Big Creek crayfish subwatersheds (31 percent) and 4 of the 16 St. Francis River crayfish subwatersheds (25 percent) have been invaded. We also know that the invasion has resulted in extirpation of the Big Creek crayfish in 9.1 rmi (14.7 km) and the St. Francis River crayfish in 8.5 rmi (13.7 km). This is likely an underestimate of the actual extent of both range contractions, given that this represents conditions in only 2 of the 21 streams and 3 of 9 subwatersheds known to be invaded by the woodland crayfish (not all known invaded streams and subwatersheds were surveyed; MDC 2018, unpublished data). In addition, the known locations of the woodland crayfish are likely an under-representation of where the species is present in the watershed given that: (1) The majority of locations were documented prior to 2010; (2) the species can expand at a rate as high as 745 yd per year (681 m per year) in the upstream direction and 2,499 yd per year (2,285 m year) in the downstream direction (DiStefano and Westhoff 2011, pp. 38, 40); (3) the woodland crayfish has likely been introduced at additional, undocumented locations (it is not feasible to survey every stream throughout the watershed); and (4) the invasion has likely progressed since the development of the SSA report and this final rule because there is currently no means to slow or stop the spread of the woodland crayfish.

The range of plausible future scenarios for the Big Creek crayfish and St. Francis River crayfish suggests reduced viability into the future. Under the ''most likely'' scenarios for both species, resiliency is expected to decline within 50 years, given that more than 50 percent of streams occupied by the species are predicted to be invaded by the woodland crayfish. As additional subpopulations become extirpated, this expected reduction in both the number and distribution of healthy (and thus sufficiently resilient) subpopulations is likely to make the species vulnerable to extreme disturbances and environmental and demographic stochasticity.

Our analysis of the Big Creek crayfish's and the St. Francis River crayfish's current and future conditions based on the increasing threat of woodland crayfish invasion and the continuing threat of contamination, as well as the consideration of conservation efforts discussed above, indicates that viability for both the Big Creek crayfish and the St. Francis River crayfish will continue to decline such that they are likely to become in danger of extinction within the foreseeable future throughout all of their ranges.

We considered whether these species are presently in danger of extinction and determined that endangered status is not appropriate. The current conditions as assessed in the SSA indicate that the species are abundant in areas not invaded by the woodland crayfish and the nonnative woodland crayfish has displaced only a portion of both species in their ranges. Although there are documented declines in areas that have been invaded by woodland crayfish, both species are presumed present in over 99 percent of their historical ranges and these areas are relatively small in comparison to the whole occupied area (Service 2022, pp. 27–28). Although the species' representation has declined by some small amount, ecological diversity (and, therefore, adaptive capacity) likely remains at a level that is currently adequate. Redundancy has also slightly declined from historical conditions from a reduction in subpopulations. In short, while the primary threats are currently acting on the species and many of those threats are expected to continue or increase into the future, we did not find that either species is currently in danger of extinction throughout all of its range.

These declines in the species' viability that are predicted to occur in the future will put the species in danger of extinction in the foreseeable future. Thus, after assessing the best available information, we determine that Big Creek crayfish and St. Francis River crayfish are not currently in danger of extinction but are likely to become in danger of extinction within the foreseeable future throughout all of their ranges.

Status Throughout a Significant Portion of Its Range

Under the Act and our implementing regulations, a species may warrant

listing if it is in danger of extinction or likely to become so in the foreseeable future throughout all or a significant portion of its range. The court in *Center for Biological Diversity* v. *Everson,* 435 F. Supp. 3d 69 (D.D.C. 2020) (*Everson*), vacated the aspect of the Final Policy on Interpretation of the Phrase ''Significant Portion of Its Range'' in the Endangered Species Act's Definitions of ''Endangered Species'' and ''Threatened Species'' (Final Policy; 79 FR 37578; July 1, 2014) that provided that the Service does not undertake an analysis of significant portions of a species' range if the species warrants listing as threatened throughout all of its range.

Therefore, we proceed to evaluating whether the species is endangered in a significant portion of its range—that is, whether there is any portion of the species' range for which both (1) the portion is significant; and (2) the species is in danger of extinction in that portion. Depending on the case, it might be more efficient for us to address the ''significance'' question or the ''status'' question first. We can choose to address either question first. Regardless of which question we address first, if we reach a negative answer with respect to the first question that we address, we do not need to evaluate the other question for that portion of the species' range.

Following the court's holding in *Everson,* we now consider whether there are any significant portions of the species' range where the species is in danger of extinction now (*i.e.,* endangered). In undertaking these analyses for Big Creek crayfish and the St. Francis River crayfish, we chose to address the status question first—we considered information pertaining to the geographic distribution of both the species and the threats that the species faces to identify portions of the range where the species may be endangered.

We evaluated the range of the Big Creek crayfish and the St. Francis River crayfish to determine if either species is in danger of extinction now in any portion of their ranges.

St. Francis River Crayfish

The St. Francis River Crayfish is a narrow endemic that functions as a single population. Thus, there is no biologically meaningful way to break this limited range into portions, and the threats that this species faces affect the species throughout its entire range. As a result, there are no portions of the species' range where the species has a different biological status from its rangewide biological status. Therefore, we conclude that there are no portions of this species' range that warrant further consideration, and the St. Francis River crayfish is not in danger of extinction in any significant portion of its range, and we determine that this species is likely to become in danger of extinction within the foreseeable future throughout all of its range. This does not conflict with the courts' holdings in *Desert Survivors* v. *U.S. Department of the Interior,* 321 F. Supp. 3d 1011, 1070–74 (N.D. Cal. 2018) and *Center for Biological Diversity* v. *Jewell,* 248 F. Supp. 3d 946, 959 (D. Ariz. 2017) because, in reaching this conclusion, we did not apply the aspects of the Final Policy, including the definition of ''significant'' that those court decisions held to be invalid.

Big Creek Crayfish

We evaluated the range of the Big Creek crayfish to determine if the species is in danger of extinction now in any portion of its range. The range of a species can theoretically be divided into portions in an infinite number of ways. We focused our analysis on portions of the species' range that may meet the definition of an endangered species. For Big Creek crayfish, we considered whether the threats or their effects on the species are greater in any biologically meaningful portion of the species' range than in other portions such that the species is in danger of extinction now in that portion.

The statutory difference between an endangered species and a threatened species is the time frame in which the species becomes in danger of extinction; an endangered species is in danger of extinction now while a threatened species is not in danger of extinction now but is likely to become so in the foreseeable future. Thus, we reviewed the best scientific and commercial data available regarding the time horizon for the threats that are driving the Big Creek crayfish to warrant listing as a threatened species throughout all of its range. We then considered whether these threats or their effects are occurring in any portion of the species' range such that the species is in danger of extinction now in that portion of its range. We examined the following threats: effects from the invasion of nonnative crayfish, contamination by heavy metal mining, and sedimentation, including cumulative effects.

As discussed above, the Big Creek crayfish functions as two populations: the Main and the Twelvemile populations. The woodland crayfish has invaded part of (approximately 31 percent) the range of the Big Creek crayfish but not the Twelvemile population. Because of this difference in the threats, we evaluated whether or not the Main population may have a different status from the rest of the range.

Within the Main population, the woodland crayfish has invaded approximately 36 percent of the range and effects to the species have begun in those areas. However, declines have not been observed in 64 percent of this population (Table 1) and the woodland crayfish will not be impacting those areas until the foreseeable future. Abundance in the Main population has also likely been reduced from heavy metal contamination given that 22 percent of the population occurs in areas with heavy metal surface contamination. However, as discussed above, there are currently multiple healthy subpopulations within the Main population.

The best scientific and commercial data available indicate that the time horizon on which the woodland crayfish threat to the species and the species' responses to this threat are likely to occur is the foreseeable future. In addition, while there are ongoing threats of heavy metal contamination within a small area of the Main population, these combined threats are not causing the Big Creek Crayfish to be in danger of extinction in the Main population, now. The best scientific and commercial data available do not indicate that any of the species' responses to those threats are more immediate in any portions of the species' range.

Instead, the Big Creek Crayfish is likely to become in danger of extinction within the foreseeable future due to the demonstrated threat of the woodland crayfish (and cumulative impacts of other identified threats) in the future for the Main population and the anticipated arrival of the woodland crayfish into the Twelvemile population.

Therefore, we determine, that the Big Creek crayfish is likely to become in danger of extinction within the foreseeable future throughout all of its range. This does not conflict with the courts' holdings in *Desert Survivors* v. *U.S. Department of the Interior,* 321 F. Supp. 3d 1011, 1070–74 (N.D. Cal. 2018) and *Center for Biological Diversity* v. *Jewell,* 248 F. Supp. 3d 946, 959 (D. Ariz. 2017) because, in reaching this conclusion, we did not apply the aspects of the Final Policy, including the definition of ''significant'' that those court decisions held to be invalid.

Determination of Status

Our review of the best scientific and commercial data available indicates that the Big Creek crayfish and the St. Francis River crayfish meet the Act's definition of threatened species.

Therefore, we are listing the Big Creek crayfish and the St. Francis River crayfish as threatened species in accordance with sections 3(20) and 4(a)(1) of the Act.

Available Conservation Measures

Conservation measures provided to species listed as endangered or threatened species under the Act include recognition as a listed species, planning and implementation of recovery actions, requirements for Federal protection, and prohibitions against certain practices. Recognition through listing results in public awareness, and conservation by Federal, State, Tribal, and local agencies, private organizations, and individuals. The Act encourages cooperation with the States and other countries and calls for recovery actions to be carried out for listed species. The protection required by Federal agencies, including the Service, and the prohibitions against certain activities are discussed, in part, below.

The primary purpose of the Act is the conservation of endangered and threatened species and the ecosystems upon which they depend. The ultimate goal of such conservation efforts is the recovery of these listed species, so that they no longer need the protective measures of the Act. Section 4(f) of the Act calls for the Service to develop and implement recovery plans for the conservation of endangered and threatened species. The goal of this process is to restore listed species to a point where they are secure, self-sustaining, and functioning components of their ecosystems.

Recovery planning consists of preparing draft and final recovery plans, beginning with the development of a recovery outline, and making it available to the public within 30 days of this final listing determination. The recovery outline guides the immediate implementation of urgent recovery actions and describes the process to be used to develop a recovery plan. Revisions of the plan may be done to address continuing or new threats to the species, as new substantive information becomes available.

The recovery plan also identifies recovery criteria for review of when a species may be ready for reclassification from endangered to threatened (''downlisting'') or removal from protected status (''delisting''), and methods for monitoring recovery progress. Recovery plans also establish a framework for agencies to coordinate their recovery efforts and provide estimates of the cost of implementing recovery tasks. Recovery teams (composed of species experts, Federal and State agencies, nongovernmental organizations, and other conservation partners) are often established to develop recovery plans. When completed, the recovery outline, draft recovery plan, and the final recovery plan will be available on our website (*https://ecos.fws.gov/ecp/*) by searching for each species of crayfish, or from our Missouri Ecological Services Field Office (see **FOR FURTHER INFORMATION CONTACT**).

Implementation of recovery actions generally requires the participation of a broad range of partners, including other Federal agencies, States, Tribes, nongovernmental organizations, businesses, and private landowners. Examples of recovery actions include habitat restoration (*e.g.,* restoration of native vegetation), research, captive propagation and reintroduction, and outreach and education. The recovery of many listed species cannot be accomplished solely on Federal lands because their ranges may occur primarily or solely on non-Federal lands. To achieve recovery of these species requires cooperative conservation efforts on private, State, and Tribal lands.

When this listing becomes effective, funding for recovery actions will be available from a variety of sources, including Federal budgets, State programs, and cost-share grants for non-Federal landowners, the academic community, and nongovernmental organizations. In addition, pursuant to section 6 of the Act, the State of Missouri will be eligible for Federal funds to implement management actions that promote the protection or recovery of the Big Creek crayfish and the St. Francis River crayfish. Information on our grant programs that are available to aid species recovery can be found at: *https://www.fws.gov/service/financial-assistance.*

Please let us know if you are interested in participating in recovery efforts for the Big Creek crayfish and the St. Francis River crayfish. Additionally, we invite you to submit any new information on these species whenever it becomes available and any information you may have for recovery planning purposes (see **FOR FURTHER INFORMATION CONTACT**).

Section 7(a) of the Act requires Federal agencies to evaluate their actions with respect to any species that is listed as an endangered or threatened species and with respect to its critical habitat. Regulations implementing this interagency cooperation provision of the Act are codified at 50 CFR part 402. Section 7(a)(2) of the Act requires Federal agencies to ensure that activities they authorize, fund, or carry out are not likely to jeopardize the continued existence of any endangered or threatened species or destroy or adversely modify its critical habitat. If a Federal action may affect a listed species or its critical habitat, the responsible Federal agency must enter into consultation with us.

Federal agency actions within the species' habitat that may require conference or consultation or both as described in the preceding paragraph may include, but are not limited to, management and any other landscape-altering activities on Federal lands administered by the Service, or U.S. Forest Service; issuance of section 404 Clean Water Act permits by the U.S. Army Corps of Engineers; and construction and maintenance of roads or highways by the Federal Highway Administration.

It is our policy, as published in the **Federal Register** on July 1, 1994 (59 FR 34272), to identify to the maximum extent practicable at the time a species is listed, those activities that would or would not constitute a violation of section 9 of the Act. The intent of this policy is to increase public awareness of the effect of a final listing on proposed and ongoing activities within the range of a listed species. The discussion below regarding protective regulations under section 4(d) of the Act complies with our policy.

II. Final Rule Issued Under Section 4(d) of the Act

Background

Section 4(d) of the Act contains two sentences. The first sentence states that the Secretary shall issue such regulations as she deems necessary and advisable to provide for the conservation of species listed as threatened. The U.S. Supreme Court has noted that statutory language like ''necessary and advisable'' demonstrates a large degree of deference to the agency (see *Webster* v. *Doe,* 486 U.S. 592 (1988)). Conservation is defined in the Act to mean the use of all methods and procedures which are necessary to bring any endangered species or threatened species to the point at which the measures provided pursuant to the Act are no longer necessary. Additionally, the second sentence of section 4(d) of the Act states that the Secretary may by regulation prohibit with respect to any threatened species any act prohibited under section 9(a)(1), in the case of fish or wildlife, or section 9(a)(2), in the case of plants. Thus, the combination of the two sentences of section 4(d) provides

the Secretary with wide latitude of discretion to select and promulgate appropriate regulations tailored to the specific conservation needs of the threatened species. The second sentence grants particularly broad discretion to the Service when adopting the prohibitions under section 9.

The courts have recognized the extent of the Secretary's discretion under this standard to develop rules that are appropriate for the conservation of a species. For example, courts have upheld rules developed under section 4(d) as a valid exercise of agency authority where they prohibited take of threatened wildlife or include a limited taking prohibition (see *Alsea Valley Alliance* v. *Lautenbacher,* 2007 U.S. Dist. Lexis 60203 (D. Or. 2007); *Washington Environmental Council* v. *National Marine Fisheries Service,* 2002 U.S. Dist. Lexis 5432 (W.D. Wash. 2002)). Courts have also upheld 4(d) rules that do not address all of the threats a species faces (see *State of Louisiana* v. *Verity,* 853 F.2d 322 (5th Cir. 1988)). As noted in the legislative history when the Act was initially enacted, ''once an animal is on the threatened list, the Secretary has an almost infinite number of options available to [her] with regard to the permitted activities for those species. [She] may, for example, permit taking, but not importation of such species, or [she] may choose to forbid both taking and importation but allow the transportation of such species'' (H.R. Rep. No. 412, 93rd Cong., 1st Sess. 1973).

Exercising our authority under section 4(d), we have developed a rule that is designed to address the Big Creek crayfish's and the St. Francis River crayfish's specific threats and conservation needs. Although the statute does not require us to make a ''necessary and advisable'' finding with respect to the adoption of specific prohibitions under section 9, we find that this rule as a whole satisfies the requirement in section 4(d) of the Act to issue regulations deemed necessary and advisable to provide for the conservation of the Big Creek crayfish and the St. Francis River crayfish. As discussed above under Summary of Biological Status and Threats, we have concluded that the Big Creek crayfish and the St. Francis River crayfish are likely to become in danger of extinction within the foreseeable future primarily due to invasion by the woodland crayfish, but additionally from the impacts from heavy metal contamination and sedimentation. The provisions of this 4(d) rule will promote conservation of the Big Creek crayfish and the St. Francis River crayfish by discouraging the spread of the woodland crayfish (and other invasive species) and encouraging management of the landscape in ways that maintains the health of Big Creek crayfish and St. Francis River crayfish and conserves the species by maximizing their ability to withstand the woodland crayfish invasion. The provisions of this rule are one of many tools that we will use to promote the conservation of the Big Creek crayfish and the St. Francis River crayfish.

Section 7(a)(2) of the Act requires Federal agencies, including the Service, to ensure that any action they fund, authorize, or carry out is not likely to jeopardize the continued existence of any endangered species or threatened species or result in the destruction or adverse modification of designated critical habitat of such species.

If a Federal action may affect a listed species or its critical habitat, the responsible Federal agency (action agency) must enter into consultation with us. Examples of actions that are subject to the section 7 consultation process are actions on State, Tribal, local, or private lands that require a Federal permit (such as a permit from the U.S. Army Corps of Engineers under section 404 of the Clean Water Act (33 U.S.C. 1251 *et seq.*) or a permit from the Service under section 10 of the Act) or that involve some other Federal action (such as funding from the Federal Highway Administration, Federal Aviation Administration, or the Federal Emergency Management Agency). Federal actions not affecting listed species or critical habitat—and actions on State, Tribal, local, or private lands that are not federally funded, authorized, or carried out by a Federal agency—do not require section 7 consultation.

This obligation does not change in any way for a threatened species with a species-specific 4(d) rule. Actions that result in a determination by a Federal agency of ''not likely to adversely affect'' continue to require the Service's written concurrence and actions that are ''likely to adversely affect'' a species require formal consultation and the formulation of a biological opinion.

Provisions of the 4(d) Rule

This 4(d) rule will provide for the conservation of the Big Creek crayfish and the St. Francis River crayfish by prohibiting the following activities, except as otherwise authorized or permitted: Import or export; take; possession and other acts with unlawfully taken specimens; delivery, receipt, transport, or shipment in interstate or foreign commerce in the course of commercial activity; and sale or offer for sale in interstate or foreign commerce. The 4(d) rule will also provide for the conservation of the species by the use of other protective regulations as follows:

As discussed above under Summary of Biological Status and Threats, the spread of nonnative crayfish (Factor E) and declines in water quality (due to mining, sedimentation, etc.) (Factor A) are affecting the status of the Big Creek crayfish and the St. Francis River crayfish. A range of activities have the potential to impact these species, including, but not limited to: Recreational activities that promote the spread of the woodland crayfish; mining (heavy metal and gravel); wastewater effluent discharge; agricultural activities; construction of low-water crossings and bridge construction; and destruction of bank habitat that increases rates of sedimentation. Regulating take from these activities would help preserve these species, slow their rate of decline, and decrease synergistic, negative effects from other stressors.

Under the Act, ''take'' means to harass, harm, pursue, hunt, shoot, wound, kill, trap, capture, or collect, or to attempt to engage in any such conduct. Some of these provisions have been further defined in regulation at 50 CFR 17.3. Take can result knowingly or otherwise, by direct and indirect impacts, intentionally or incidentally. Regulating incidental and intentional take will help discourage the spread of the woodland crayfish and will maintain or increase water quality to preserve the Big Creek crayfish and the St. Francis River crayfish, slow their rate of decline, and decrease synergistic, negative effects from other stressors.

We may issue permits to carry out otherwise prohibited activities, including those described above, involving threatened wildlife under certain circumstances. Regulations governing permits are codified at 50 CFR 17.32. With regard to threatened wildlife, a permit may be issued for the following purposes: For scientific purposes, to enhance propagation or survival, for economic hardship, for zoological exhibition, for educational purposes, for incidental taking, or for special purposes consistent with the purposes of the Act. The statute also contains certain exemptions from the prohibitions, which are found in sections 9 and 10 of the Act.

We recognize the special and unique relationship with our State natural resource agency partners in contributing to conservation of listed species. State

agencies often possess scientific data and valuable expertise on the status and distribution of endangered, threatened, and candidate species of wildlife and plants. State agencies, because of their authorities and their close working relationships with local governments and landowners, are in a unique position to assist us in implementing all aspects of the Act. In this regard, section 6 of the Act provides that we shall cooperate to the maximum extent practicable with the States in carrying out programs authorized by the Act. Therefore, any qualified employee or agent of a State conservation agency that is a party to a cooperative agreement with us in accordance with section 6(c) of the Act, who is designated by his or her agency for such purposes, will be able to conduct activities designed to conserve Big Creek crayfish or St. Francis River crayfish that may result in otherwise prohibited take without additional authorization. Additionally, this 4(d) rule also allows a person to take a Big Creek crayfish or a St. Francis River crayfish if that person is conducting research or education under a valid Missouri Department of Conservation Wildlife Collector's permit.

Along with State (and State-sponsored) conservation efforts, a person may take, incidental to an otherwise lawful activity, a Big Creek crayfish or a St. Francis River crayfish during restoration activities or other activities that will result in an overall benefit to one or both of the species or their habitat. Such activities include, but are not limited to, heavy metal remediation efforts and habitat restoration efforts.

Our full 4(d) rule for the Big Creek crayfish and the St. Francis River crayfish, including all of the prohibitions and exceptions to prohibitions for these species, is provided below, under Regulation Promulgation.

Nothing in this 4(d) rule will change in any way the recovery planning provisions of section 4(f) of the Act, the consultation requirements under section 7 of the Act, or the ability of the Service to enter into partnerships for the management and protection of the Big Creek crayfish and the St. Francis River crayfish. However, interagency cooperation may be further streamlined through planned programmatic consultations for the species between Federal agencies and the Service.

III. Critical Habitat

Background

Critical habitat is defined in section 3 of the Act as:

(1) The specific areas within the geographical area occupied by the species, at the time it is listed in accordance with the Act, on which are found those physical or biological features

(a) Essential to the conservation of the species, and

(b) Which may require special management considerations or protection; and

(2) Specific areas outside the geographical area occupied by the species at the time it is listed, upon a determination that such areas are essential for the conservation of the species.

Our regulations at 50 CFR 424.02 define the geographical area occupied by the species as an area that may generally be delineated around species' occurrences, as determined by the Secretary (*i.e.,* range). Such areas may include those areas used throughout all or part of the species' life cycle, even if not used on a regular basis (*e.g.,* migratory corridors, seasonal habitats, and habitats used periodically, but not solely by vagrant individuals).

Conservation, as defined under section 3 of the Act, means to use and the use of all methods and procedures that are necessary to bring an endangered or threatened species to the point at which the measures provided pursuant to the Act are no longer necessary. Such methods and procedures include, but are not limited to, all activities associated with scientific resources management such as research, census, law enforcement, habitat acquisition and maintenance, propagation, live trapping, and transplantation, and, in the extraordinary case where population pressures within a given ecosystem cannot be otherwise relieved, may include regulated taking.

Critical habitat receives protection under section 7 of the Act through the requirement that Federal agencies ensure, in consultation with the Service, that any action they authorize, fund, or carry out is not likely to result in the destruction or adverse modification of critical habitat. The designation of critical habitat does not affect land ownership or establish a refuge, wilderness, reserve, preserve, or other conservation area. Such designation also does not allow the government or public to access private lands. Such designation does not require implementation of restoration, recovery, or enhancement measures by non-Federal landowners. Where a landowner requests Federal agency funding or authorization for an action that may affect a listed species or critical habitat, the Federal agency will be required to consult with the Service under section 7(a)(2) of the Act. However, even if the Service were to conclude that the proposed activity would result in destruction or adverse modification of the critical habitat, the Federal action agency and the landowner are not required to abandon the proposed activity, or to restore or recover the species; instead, they must implement ''reasonable and prudent alternatives'' to avoid destruction or adverse modification of critical habitat.

Under the first prong of the Act's definition of critical habitat, areas within the geographical area occupied by the species at the time it was listed are included in a critical habitat designation if they contain physical or biological features (1) essential to the conservation of the species and (2) which may require special management considerations or protection. For these areas, critical habitat designations identify, to the extent known using the best scientific and commercial data available, those physical or biological features that are essential to the conservation of the species (such as space, food, cover, and protected habitat).

Under the second prong of the Act's definition of critical habitat, we can designate critical habitat in areas outside the geographical area occupied by the species at the time it is listed, upon a determination that such areas are essential for the conservation of the species.

Section 4 of the Act requires that we designate critical habitat on the basis of the best scientific data available. Further, our Policy on Information Standards Under the Endangered Species Act (published in the **Federal Register** on July 1, 1994 (59 FR 34271)), the Information Quality Act (section 515 of the Treasury and General Government Appropriations Act for Fiscal Year 2001 (Pub. L. 106–554; H.R. 5658)), and our associated Information Quality Guidelines provide criteria, establish procedures, and provide guidance to ensure that our decisions are based on the best scientific data available. They require our biologists, to the extent consistent with the Act and with the use of the best scientific data available, to use primary and original sources of information as the basis for recommendations to designate critical habitat.

When we are determining which areas should be designated as critical habitat, the primary sources of information are generally referenced in the SSA report and also include information developed during the listing process for the species. Additional information sources may include any generalized conservation strategy, criteria, or outline that may have been developed for the species; the recovery plan for the species; articles in peer-reviewed journals; conservation plans developed by States and counties; scientific status surveys and studies; biological assessments; other unpublished materials; or experts' opinions or personal knowledge.

Habitat is dynamic, and species may move from one area to another over time. We recognize that critical habitat designated at a particular point in time may not include all of the habitat areas that we may later determine are necessary for the recovery of the species. For these reasons, a critical habitat designation does not signal that habitat outside the designated area is unimportant or may not be needed for recovery of the species. Areas that are important to the conservation of the species, both inside and outside the critical habitat designation, will continue to be subject to: (1) Conservation actions implemented under section 7(a)(1) of the Act; (2) regulatory protections afforded by the requirement in section 7(a)(2) of the Act for Federal agencies to ensure their actions are not likely to jeopardize the continued existence of any endangered or threatened species; and (3) the prohibitions found in section 9 of the Act. Federally funded or permitted projects affecting listed species outside their designated critical habitat areas may still result in jeopardy findings in some cases. These protections and conservation tools will continue to contribute to recovery of this species. Similarly, critical habitat designations made on the basis of the best available information at the time of designation will not control the direction and substance of future recovery plans, habitat conservation plans (HCPs), or other species conservation planning efforts if new information available at the time of these planning efforts calls for a different outcome.

Physical or Biological Features Essential to the Conservation of the Species

In accordance with section 3(5)(A)(i) of the Act and regulations at 50 CFR 424.12(b), in determining which areas we will designate as critical habitat from within the geographical area occupied by the species at the time of listing, we consider the physical or biological features that are essential to the conservation of the species and that may require special management considerations or protection. The regulations at 50 CFR 424.02 define ''physical or biological features essential to the conservation of the species'' as the features that occur in specific areas and that are essential to support the life-history needs of the species, including, but not limited to, water characteristics, soil type, geological features, sites, prey, vegetation, symbiotic species, or other features. A feature may be a single habitat characteristic or a more complex combination of habitat characteristics. Features may include habitat characteristics that support ephemeral or dynamic habitat conditions. Features may also be expressed in terms relating to principles of conservation biology, such as patch size, distribution distances, and connectivity. For example, physical features essential to the conservation of the species might include gravel of a particular size required for spawning, alkaline soil for seed germination, protective cover for migration, or susceptibility to flooding or fire that maintains necessary early-successional habitat characteristics. Biological features might include prey species, forage grasses, specific kinds or ages of trees for roosting or nesting, symbiotic fungi, or a particular level of nonnative species consistent with conservation needs of the listed species. The features may also be combinations of habitat characteristics and may encompass the relationship between characteristics or the necessary amount of a characteristic essential to support the life history of the species.

In considering whether features are essential to the conservation of the species, we may consider an appropriate quality, quantity, and spatial and temporal arrangement of habitat characteristics in the context of the life-history needs, condition, and status of the species. These characteristics include, but are not limited to, space for individual and population growth and for normal behavior; food, water, air, light, minerals, or other nutritional or physiological requirements; cover or shelter; sites for breeding, reproduction, or rearing (or development) of offspring; and habitats that are protected from disturbance.

Summary of Essential Physical or Biological Features

We derive the specific physical or biological features essential to the conservation of Big Creek crayfish and St. Francis River crayfish from studies of the species' habitat, ecology, and life history, and describe them below. Additional information can be found in the SSA report (Service 2022, entire) or the proposed rule (85 FR 58192), both documents are available on *https://www.regulations.gov* under Docket No. FWS–R3–ES–2019–0020). We have determined that the following physical or biological features are essential to the conservation of Big Creek crayfish and St. Francis River crayfish:

(1) Stream flow velocity generally between 0 and 1.1 feet per second (ft/s) (0 and 0.35 meters per second (m/s)).

(2) Stream depths generally between 0.2 and 1.6 ft (0.06 and 0.49 m) for the Big Creek crayfish, and stream depths generally between 0.2 and 1.7 ft (0.06 and 0.52 m) for the St. Francis River crayfish.

(3) Water temperatures between 34 and 84 degrees Fahrenheit (°F) (1.1 and 28.9 degrees Celsius (°C)).

(4) Adequately low stream embeddedness so that spaces under rocks and cavities in gravel remain available to the Big Creek crayfish and St. Francis River crayfish.

(5) An available forage and prey base consisting of invertebrates, periphyton, and plant detritus.

(6) Connectivity among occupied stream reaches of the Big Creek crayfish (both within and among occupied subwatersheds), and connectivity among occupied stream reaches of the St. Francis River crayfish (both within and among occupied subwatersheds).

(7) Ratios or densities of nonnative species low enough to allow for maintaining the populations of the Big Creek crayfish and St. Francis River crayfish.

Special Management Considerations or Protection

When designating critical habitat, we assess whether the specific areas within the geographical area occupied by the species at the time of listing contain features that are essential to the conservation of the species and which may require special management considerations or protection. The features essential to the conservation of the Big Creek crayfish and St. Francis River crayfish may require special management considerations or protections to reduce the following threats: (1) Facilitated movement of nonnative crayfish (for example, bait bucket dumping); (2) nutrient pollution that impacts water quantity and quality, including, but not limited to, agricultural runoff and wastewater effluent; (3) significant alteration of water quality (for example, heavy metal contamination); (4) forest management

or silviculture activities that do not implement State-approved best management practices (BMPs) such that riparian corridors are impacted or sedimentation is increased; (5) sedimentation from construction of dams, culverts, and low water crossings that do not allow for the passage of species or materials, and pipeline and utility installation that creates barriers to movement; and (6) other watershed and floodplain disturbances that release sediments or nutrients into the water.

Management activities that could ameliorate these threats include, but are not limited to: Education to encourage responsible and legal bait use and proper disposal of unused bait; use of BMPs designed to reduce sedimentation, erosion, and bank side destruction; protection of riparian corridors and retention of sufficient canopy cover along banks; moderation of surface and ground water withdrawals to maintain natural flow regimes; increased use of stormwater management and reduction of stormwater flows into the systems; remediation of contaminated stream reaches and eroding stream banks; and reduction of other watershed and floodplain disturbances that release sediments, pollutants, or nutrients into the water.

Criteria Used To Identify Critical Habitat

As required by section 4(b)(2) of the Act, we use the best scientific data available to designate critical habitat. In accordance with the Act and our implementing regulations at 50 CFR 424.12(b), we review available information pertaining to the habitat requirements of the species and identify specific areas within the geographical area occupied by the species at the time of listing and any specific areas outside the geographical area occupied by the species to be considered for designation as critical habitat. We are not designating any areas outside the geographical areas occupied by the species because we have not identified any unoccupied areas that meet the definition of critical habitat and we have determined that designating the occupied areas is sufficient to conserve the Big Creek crayfish and the St. Francis River crayfish.

We anticipate that recovery will require continued protection of existing populations and habitat, as well as ensuring there are adequate numbers of Big Creek crayfish and St. Francis River crayfish in stable subpopulations and that these subpopulations occur over a wide geographic area. This strategy will help to ensure that extreme events, such as the effects of flooding (for example, flooding that causes excessive sedimentation, nutrients, and debris to disrupt stream ecology), droughts, or chemical spills, cannot simultaneously affect all known subpopulations. The following rangewide potential recovery actions were considered in formulating this designation of critical habitat: (1) Mitigating or minimizing the effects of the spread of woodland crayfish, preventing additional introductions of woodland crayfish (and other nonnative species), investigating methods to slow or halt the expansion of woodland crayfish, and investigating methods of eradicating woodland crayfish; (2) maintaining the quality and quantity of habitat (including, but not limited to, preventing increased sedimentation rates); (3) preventing additional heavy metal contamination and remediating previous heavy metal contamination; (4) investigating other water quality issues that may impact crayfish abundance; and (5) minimizing loss of rangewide genetic diversity by maintaining adequate population sizes, distribution, and connectivity.

Sources of data for these designations of critical habitat include the Missouri Department of Conservation, National Hydrography Dataset Plus (for mapping purposes), published literature, survey reports on water quality in various streams within the species' ranges (for more information, see the SSA report), and the proposed rule (85 FR 58192; September 17, 2020). We have also reviewed available information that pertains to the habitat requirements of this species. Sources of information on habitat requirements include studies conducted at occupied sites and published in peer-reviewed articles, agency reports, and data collected during monitoring efforts (see the SSA report: Service 2022). We have also reviewed all comments submitted by the public during two public comment periods on the proposed rule (see 85 FR 58192, September 17, 2020, and 86 FR 22127, April 27, 2021).

We consider the areas occupied at the time of listing to include all streams within occupied subwatersheds (at the 12-digit hydrologic unit level). Occupied watersheds were determined using data from the Missouri Department of Conservation. For the purposes of designating critical habitat, we also consider stretches of the St. Francis River between subwatersheds as occupied migratory corridors, based on genetic analyses that indicate there is gene flow among subwatersheds.

Based on this information, we consider all streams within the following subwatersheds in the Upper St. Francis River watershed to be currently occupied by the Big Creek crayfish at the time of this final listing (numbers in parentheses represent the 12-digit hydrologic codes): Big Lake Creek-St. Francis River (080202020503), Blankshire Branch-St. Francis River (080202020204), Captain Creek-St. Francis River (080202020405), Cedar Bottom Creek-St. Francis River (080202020402), Clark Creek (080202020407), Cedar Bottom Creek (080202020501), Crane Pond Creek (080202020303), Headwaters St. Francis River (080202020201), Headwaters Twelvemile Creek (080202020403), Leatherwood Creek-St. Francis River (080202020406), Lower Big Creek (080202020304), Middle Big Creek (080202020302), Saline Creek-Little St. Francis River (080202020102), Turkey Creek-St. Francis River (080202020210), Twelvemile Creek (080202020404), and Upper Big Creek (080202020301). We also consider the entire St. Francis River upstream of 37.091254N, 90.447212W to be occupied, as genetic analyses indicate gene flow among the subwatersheds.

For the St. Francis River crayfish, we consider all streams within the following subwatersheds to be currently occupied at the time of listing: Blankshire Branch-St. Francis River (80202020204), Captain Creek-St. Francis River (80202020405), Cedar Bottom Creek-St. Francis River (80202020402), Headwaters St. Francis River (80202020201), Headwaters Stouts Creek (80202020207), Hubble Creek-St. Francis River (80202020502), Leatherwood Creek-St. Francis River (80202020406), Little St. Francis River (80202020103), Lost Creek (80202020507), Marble Creek (80202020401), Musco Creek-Little St. Francis River (80202020101), O'Bannon Creek-St. Francis River (80202020206), Saline Creek-Little St. Francis River (80202020102), Stouts Creek (80202020208), Turkey Creek-St. Francis River (80202020210), and Wachita Creek-St. Francis River (80202020209). We also consider the entire St. Francis River upstream of 36.982104N, 90.335400W to be currently occupied, given that genetic analyses indicate gene flow among subwatersheds. The final critical habitat designation for each species includes all known currently occupied streams within the historical range, as well as those that connect occupied streams that contain the physical or biological features that will allow for the maintenance and expansion of existing populations and movement between them. See Final Critical Habitat

Designations, below, for a more detailed explanation of the units.

When determining critical habitat boundaries, we made every effort to avoid including developed areas such as lands covered by buildings, pavement, and other structures because such lands lack physical or biological features necessary for Big Creek crayfish and the St. Francis River crayfish. The scale of the maps we prepared under the parameters for publication within the Code of Federal Regulations may not reflect the exclusion of such developed lands. Any such lands inadvertently left inside critical habitat boundaries shown on the maps of this rule have been excluded by text in the rule and are not designated as critical habitat. Therefore, a Federal action involving these lands will not trigger section 7 consultation with respect to critical habitat and the requirement of no adverse modification unless the specific action will affect the physical or biological features in the adjacent critical habitat.

We are designating as critical habitat areas that we have determined are occupied at the time of listing (*i.e.,* currently occupied) and that contain one or more of the physical or biological features that are essential to support life-history processes of the species.

We are designating one critical habitat unit for each species, for a total of two units for both species, based on one or more of the physical or biological features being present to support the Big Creek crayfish or St. Francis River crayfish's life-history processes. All units are occupied and contain one or more of the identified physical or biological features and support multiple life-history processes.

The critical habitat designations are defined by the map or maps, as modified by any accompanying regulatory text, presented at the end of this document under Regulation Promulgation. We include more detailed information on the boundaries of each critical habitat designation in the preamble of this document. We will make the coordinates or plot points or both on which each map is based available to the public on *https://www.regulations.gov* at Docket No. FWS–R3–ES–2019–0020 and at the field office responsible for the designation (see **FOR FURTHER INFORMATION CONTACT**).

Final Critical Habitat Designations

We are designating one unit for each species, for a total of two units for both species, as critical habitat for the Big Creek crayfish and the St. Francis River crayfish. The critical habitat areas we describe below constitute our current best assessment of areas that meet the definition of critical habitat for Big Creek crayfish and St. Francis River crayfish. We are designating approximately 1,069 rmi (1,720 km) of critical habitat in one unit for Big Creek crayfish. We are designating approximately 1,043 rmi (1,679 km) of critical habitat in another unit for the St. Francis River crayfish. Tables 6 and 7 provide information on the approximate area of each unit and the adjacent land ownership. Because all streambeds are navigable waters, both critical habitat units are managed by the State of Missouri. The units include stream habitat up to bank full height. We are not designating any adjacent land as critical habitat.

TABLE 6—CRITICAL HABITAT UNIT FOR BIG CREEK CRAYFISH

Adjacent land ownership	Stream miles (kilometers)
Federal	296 (476)
State	42 (68)
Private	730 (1,175)
Total	1,069 (1,720)

Note: Area sizes may not sum due to rounding.

TABLE 7—CRITICAL HABITAT UNIT FOR ST. FRANCIS RIVER CRAYFISH

Adjacent land ownership	Stream miles (kilometers)
Federal	329 (529)
State	22 (35)
Private	693 (1,115)
Total	1,043 (1,679)

Note: Area sizes may not sum due to rounding.

We present brief descriptions of both units, and reasons why each one meets the definition of critical habitat for Big Creek crayfish or St. Francis River crayfish, below.

Big Creek Crayfish Unit

The Big Creek crayfish unit consists of approximately 1,069 rmi (1,720 km) in the Upper St. Francis River watershed upstream of Wappapello Dam in Iron, Madison, St. Francois, Washington, and Wayne Counties in Missouri. The unit consists of all of the streams in the following 12-digit hydrologic units: Big Lake Creek-St. Francis River (080202020503), Blankshire Branch-St. Francis River (080202020204), Captain Creek-St. Francis River (080202020405), Cedar Bottom Creek-St. Francis River (080202020402), Clark Creek (080202020407), Cedar Bottom Creek (080202020501), Crane Pond Creek (080202020303), Headwaters St. Francis River (080202020201), Headwaters Twelvemile Creek (080202020403), Leatherwood Creek-St. Francis River (080202020406), Lower Big Creek (080202020304), Middle Big Creek (080202020302), Saline Creek-Little St. Francis River (080202020102), Turkey Creek-St. Francis River (080202020210), Twelvemile Creek (080202020404), and Upper Big Creek (080202020301). The unit also consists of the entire St. Francis River upstream of 37.091254N, 90.447212W. The unit does not include any areas of adjacent land. A large portion of the riparian land adjacent to streams in this unit is privately owned (68 percent), with 28 percent in Federal ownership and 4 percent in State ownership.

St. Francis River Crayfish Unit

The St. Francis River crayfish unit consists of approximately 1,043 rmi (1,679 km) in the Upper St. Francis River watershed upstream of Wappapello Dam in Iron, Madison, St. Francois, Washington, and Wayne Counties in Missouri. The unit consists of all of the streams in the following 12-digit hydrologic units: Blankshire Branch-St. Francis River (80202020204), Captain Creek-St. Francis River (80202020405), Cedar Bottom Creek-St. Francis River (80202020402), Headwaters St. Francis River (80202020201), Headwaters Stouts Creek (80202020207), Hubble Creek-St. Francis River (80202020502), Leatherwood Creek-St. Francis River (80202020406), Little St. Francis River (80202020103), Lost Creek (80202020507), Marble Creek (80202020401), Musco Creek-Little St. Francis River (80202020101), O'Bannon Creek-St. Francis River (80202020206), Saline Creek-Little St. Francis River (80202020102), Stouts Creek (80202020208), Turkey Creek-St. Francis River (80202020210), and Wachita Creek-St. Francis River (80202020209). The unit also consists of the entire St. Francis River upstream of 36.982104N, 90.335400W. The unit does not include any areas of adjacent land. A large portion of the riparian land adjacent to streams in this unit is privately owned (66 percent), with 32 percent in Federal ownership and 2 percent in State ownership.

Effects of Critical Habitat Designation

Section 7 Consultation

Section 7(a)(2) of the Act requires Federal agencies, including the Service, to ensure that any action they fund, authorize, or carry out is not likely to jeopardize the continued existence of any endangered species or threatened species or result in the destruction or adverse modification of designated critical habitat of such species.

We published a final rule revising the definition of destruction or adverse modification on August 27, 2019 (84 FR 44976). Destruction or adverse modification means a direct or indirect alteration that appreciably diminishes the value of critical habitat as a whole for the conservation of a listed species.

If a Federal action may affect a listed species or its critical habitat, the responsible Federal agency (action agency) must enter into consultation with us. Examples of actions that are subject to the section 7 consultation process are actions on State, Tribal, local, or private lands that require a Federal permit (such as a permit from the U.S. Army Corps of Engineers under section 404 of the Clean Water Act or a permit from the Service under section 10 of the Act) or that involve some other Federal action (such as funding from the Federal Highway Administration, Federal Aviation Administration, or the Federal Emergency Management Agency). Federal actions not affecting listed species or critical habitat—and actions on State, Tribal, local, or private lands that are not federally funded, authorized, or carried out by a Federal agency—do not require section 7 consultation.

Compliance with the requirements of section 7(a)(2) is documented through our issuance of:

(1) A concurrence letter for Federal actions that may affect, but are not likely to adversely affect, listed species or critical habitat; or

(2) A biological opinion for Federal actions that may affect, and are likely to adversely affect, listed species or critical habitat.

When we issue a biological opinion concluding that a project is likely to jeopardize the continued existence of a listed species and/or destroy or adversely modify critical habitat, we provide reasonable and prudent alternatives to the project, if any are identifiable, that would avoid the likelihood of jeopardy and/or destruction or adverse modification of critical habitat. We define ''reasonable and prudent alternatives'' (at 50 CFR 402.02) as alternative actions identified during consultation that:

(1) Can be implemented in a manner consistent with the intended purpose of the action,

(2) Can be implemented consistent with the scope of the Federal agency's legal authority and jurisdiction,

(3) Are economically and technologically feasible, and

(4) Would, in the Service Director's opinion, avoid the likelihood of jeopardizing the continued existence of the listed species and/or avoid the likelihood of destroying or adversely modifying critical habitat.

Reasonable and prudent alternatives can vary from slight project modifications to extensive redesign or relocation of the project. Costs associated with implementing a reasonable and prudent alternative are similarly variable.

Regulations at 50 CFR 402.16 set forth requirements for Federal agencies to reinitiate consultation on previously reviewed actions. These requirements apply when the Federal agency has retained discretionary involvement or control over the action (or the agency's discretionary involvement or control is authorized by law) and, subsequent to the previous consultation: (a) if the amount or extent of taking specified in the incidental take statement is exceeded; (b) if new information reveals effects of the action that may affect listed species or critical habitat in a manner or to an extent not previously considered; (c) if the identified action is subsequently modified in a manner that causes an effect to the listed species or critical habitat that was not considered in the biological opinion or written concurrence; or (d) if a new species is listed or critical habitat designated that may be affected by the identified action. The reinitiation requirement applies only to actions that remain subject to some discretionary Federal involvement or control. As provided in 50 CFR 402.16, the requirement to reinitiate consultations for new species listings or critical habitat designation does not apply to certain agency actions (*e.g.,* land management plans issued by the Bureau of Land Management in certain circumstances.

Application of the ''Adverse Modification'' Standard

The key factor related to the destruction or adverse modification determination is whether implementation of the proposed Federal action directly or indirectly alters the designated critical habitat in a way that appreciably diminishes the value of the critical habitat as a whole for the conservation of the listed species. As discussed above, the role of critical habitat is to support physical or biological features essential to the conservation of a listed species and provide for the conservation of the species.

Section 4(b)(8) of the Act requires us to briefly evaluate and describe, in any proposed or final regulation that designates critical habitat, activities involving a Federal action that may violate section 7(a)(2) of the Act by destroying or adversely modifying such habitat, or that may be affected by such designation.

At this time, we are not aware of any activities that are likely to destroy or adversely modify critical habitat. However, during each consultation under section (7a)(2) of the Act, we will evaluate whether proposed activities are likely to destroy or adversely modify critical habitat.

Exemptions

Application of Section 4(a)(3) of the Act

Section 4(a)(3)(B)(i) of the Act (16 U.S.C. 1533(a)(3)(B)(i)) provides that the Secretary shall not designate as critical habitat any lands or other geographical areas owned or controlled by the Department of Defense (DoD), or designated for its use, that are subject to an integrated natural resources management plan (INRMP) prepared under section 101 of the Sikes Act Improvement Act of 1997 (16 U.S.C. 670a), if the Secretary determines in writing that such plan provides a benefit to the species for which critical habitat is proposed for designation. There are no DoD lands with a completed INRMP within the final critical habitat designations.

Consideration of Impacts Under Section 4(b)(2) of the Act

Section 4(b)(2) of the Act states that the Secretary shall designate and make revisions to critical habitat on the basis of the best available scientific data after taking into consideration the economic impact, national security impact, and any other relevant impact of specifying any particular area as critical habitat. The Secretary may exclude an area from critical habitat if she determines that the benefits of such exclusion outweigh the benefits of specifying such area as part of the critical habitat, unless she determines, based on the best scientific data available, that the failure to designate such area as critical habitat will result in the extinction of the species. In making the determination to exclude a particular area, the statute on its face, as well as the legislative history, are clear that the Secretary has broad discretion regarding which factor(s) to use and how much weight to give to any factor. In this final rule, we have not considered any areas for exclusion from critical habitat.

On December 18, 2020, we published a final rule in the **Federal Register** (85 FR 82376) revising portions of our regulations pertaining to exclusions of critical habitat. These final regulations became effective on January 19, 2021, and apply to critical habitat rules for which a proposed rule was published

after January 19, 2021. Consequently, these new regulations do not apply to this final rule.

Exclusions Based on Economic Impacts

Section 4(b)(2) of the Act and its implementing regulations require that we consider the economic impact that may result from a designation of critical habitat. To consider economic impacts, we prepared an incremental effects memorandum (IEM) and screening analysis, which, together with our narrative and interpretation of effects, we consider our economic analysis of the proposed critical habitat designations and related factors (IEc 2019, entire). The analysis, dated March 28, 2019, was made available for public review from September 17, 2020, through November 16, 2020 (see 85 FR 58192; September 17, 2020) and from April 27, 2021, to May 27, 2021 (see 86 FR 22127; April 27, 2021). The economic analysis addressed probable economic impacts of critical habitat designation for Big Creek crayfish and St. Francis River crayfish. Following the close of the comment periods, we reviewed and evaluated all information submitted during the comment periods that may pertain to our consideration of the probable incremental economic impacts of these critical habitat designations.

Our analysis concluded that these costs will not reach the threshold of ''significant'' under E.O. 12866. For the critical habitat designations for both species, we anticipate a maximum of 115 section 7 consultations annually at a total incremental cost of approximately $135,000 per year (IEc 2019, entire).

As we stated earlier, we solicited data and comments from the public on the economic analysis, as well as all aspects of the proposed rule and our required determinations. We did not receive any comments or additional data that would necessitate a revision of our IEM or screening analysis. Therefore, we are adopting our draft economic analysis as our final economic analysis.

We considered the economic impacts of the critical habitat designations. The Secretary is not exercising her discretion to exclude any areas from these designations of critical habitat for the Big Creek crayfish and the St. Francis River crayfish based on economic impacts.

Exclusions Based on Impacts on National Security and Homeland Security

In preparing this final rule, we have determined that the lands within the designations of critical habitat for Big Creek crayfish and St. Francis River crayfish are not owned or managed by the DoD or Department of Homeland Security, and, therefore, we anticipate no impact on national security or homeland security. We did not receive any additional information during the public comment period for the proposed designation regarding impacts of the designation on national security or homeland security that would support excluding any specific areas from the final critical habitat designation under authority of section 4(b)(2) and our implementing regulations at 50 CFR 424.19.

Exclusions Based on Other Relevant Impacts

Under section 4(b)(2) of the Act, we consider any other relevant impacts, in addition to economic impacts and impacts on national security as discussed above. We consider a number of factors, including whether there are permitted conservation plans covering the species in the area such as HCPs, safe harbor agreements (SHAs), or candidate conservation agreements with assurances (CCAAs), or whether there are non-permitted conservation agreements and partnerships that would be encouraged by designation of, or exclusion from, critical habitat. In addition, we look at the existence of Tribal conservation plans and partnerships and consider the government-to-government relationship of the United States with Tribal entities. We also consider any social impacts that might occur because of the designations.

In preparing this final rule, we have determined that there are currently no HCPs or other management plans for Big Creek crayfish and St. Francis River crayfish, and the designations do not include any Tribal lands or trust resources. We anticipate no impact on Tribal lands, partnerships, or HCPs from the critical habitat designations. Additionally, as described above, we are not excluding any particular areas on the basis of impacts to national security or economic impacts because there are no national security areas in the critical habitat designations.

During the development of these final designations, we considered all additional information received through the public comment periods regarding other relevant impacts to determine whether any specific areas should have been excluded from the final critical habitat designations under authority of section 4(b)(2) and our implementing regulations at 50 CFR 424.19. As stated above, the Secretary is not exercising her discretion to exclude any areas from the final critical habitat designations.

Required Determinations

Regulatory Planning and Review (Executive Orders 12866 and 13563)

Executive Order 12866 provides that the Office of Information and Regulatory Affairs (OIRA) in the Office of Management and Budget will review all significant rules. OIRA has determined that this rule is not significant.

Executive Order 13563 reaffirms the principles of E.O. 12866 while calling for improvements in the nation's regulatory system to promote predictability, to reduce uncertainty, and to use the best, most innovative, and least burdensome tools for achieving regulatory ends. The executive order directs agencies to consider regulatory approaches that reduce burdens and maintain flexibility and freedom of choice for the public where these approaches are relevant, feasible, and consistent with regulatory objectives. E.O. 13563 emphasizes further that regulations must be based on the best available science and that the rulemaking process must allow for public participation and an open exchange of ideas. We have developed this final rule in a manner consistent with these requirements.

Regulatory Flexibility Act (5 U.S.C. 601 et seq.)

Under the Regulatory Flexibility Act (RFA; 5 U.S.C. 601 *et seq.*), as amended by the Small Business Regulatory Enforcement Fairness Act of 1996 (SBREFA; 5 U.S.C. 801 *et seq.*), whenever an agency is required to publish a notice of rulemaking for any proposed or final rule, it must prepare and make available for public comment a regulatory flexibility analysis that describes the effects of the rule on small entities (*i.e.,* small businesses, small organizations, and small government jurisdictions). However, no regulatory flexibility analysis is required if the head of the agency certifies the rule will not have a significant economic impact on a substantial number of small entities. The SBREFA amended the RFA to require Federal agencies to provide a certification statement of the factual basis for certifying that the rule will not have a significant economic impact on a substantial number of small entities.

According to the Small Business Administration, small entities include small organizations such as independent nonprofit organizations; small governmental jurisdictions, including school boards and city and town governments that serve fewer than 50,000 residents; and small businesses (13 CFR 121.201). Small businesses include manufacturing and mining

concerns with fewer than 500 employees, wholesale trade entities with fewer than 100 employees, retail and service businesses with less than $5 million in annual sales, general and heavy construction businesses with less than $27.5 million in annual business, special trade contractors doing less than $11.5 million in annual business, and agricultural businesses with annual sales less than $750,000. To determine if potential economic impacts to these small entities are significant, we considered the types of activities that might trigger regulatory impacts under this designation as well as types of project modifications that may result. In general, the term ''significant economic impact'' is meant to apply to a typical small business firm's business operations.

Under the RFA, as amended, and as understood in light of recent court decisions, Federal agencies are required to evaluate the potential incremental impacts of rulemaking on those entities directly regulated by the rulemaking itself; in other words, the RFA does not require agencies to evaluate the potential impacts to indirectly regulated entities. The regulatory mechanism through which critical habitat protections are realized is section 7 of the Act, which requires Federal agencies, in consultation with the Service, to ensure that any action authorized, funded, or carried out by the agency is not likely to destroy or adversely modify critical habitat. Therefore, under section 7, only Federal action agencies are directly subject to the specific regulatory requirement (avoiding destruction and adverse modification) imposed by critical habitat designation. Consequently, it is our position that only Federal action agencies will be directly regulated by this designation. There is no requirement under the RFA to evaluate the potential impacts to entities not directly regulated. Moreover, Federal agencies are not small entities. Therefore, because no small entities will be directly regulated by this rulemaking, we certify that the final critical habitat designations will not have a significant economic impact on a substantial number of small entities.

In summary, we have considered whether the final critical habitat designations will result in a significant economic impact on a substantial number of small entities. For the above reasons and based on currently available information, we certify that the final critical habitat designation will not have a significant economic impact on a substantial number of small business entities. Therefore, a regulatory flexibility analysis is not required.

Energy Supply, Distribution, or Use—Executive Order 13211

Executive Order 13211 (Actions Concerning Regulations That Significantly Affect Energy Supply, Distribution, or Use) requires agencies to prepare Statements of Energy Effects when undertaking certain actions. In our economic analysis, we did not find that the critical habitat designations will significantly affect energy supplies, distribution, or use. The critical habitat designations for Big Creek crayfish and St. Francis River crayfish are unlikely to generate costs exceeding $100 million in a single year (IEc 2019, p. 2). Therefore, this action is not a significant energy action, and no Statement of Energy Effects is required.

Unfunded Mandates Reform Act (2 U.S.C. 1501 et seq.)

In accordance with the Unfunded Mandates Reform Act (2 U.S.C. 1501 *et seq.*), we make the following finding:

(1) This rule will not produce a Federal mandate. In general, a Federal mandate is a provision in legislation, statute, or regulation that would impose an enforceable duty upon State, local, or Tribal governments, or the private sector, and includes both ''Federal intergovernmental mandates'' and ''Federal private sector mandates.'' These terms are defined in 2 U.S.C. 658(5)–(7). ''Federal intergovernmental mandate'' includes a regulation that ''would impose an enforceable duty upon State, local, or Tribal governments'' with two exceptions. It excludes ''a condition of Federal assistance.'' It also excludes ''a duty arising from participation in a voluntary Federal program,'' unless the regulation ''relates to a then-existing Federal program under which $500,000,000 or more is provided annually to State, local, and Tribal governments under entitlement authority,'' if the provision would ''increase the stringency of conditions of assistance'' or ''place caps upon, or otherwise decrease, the Federal Government's responsibility to provide funding,'' and the State, local, or Tribal governments ''lack authority'' to adjust accordingly. At the time of enactment, these entitlement programs were: Medicaid; Aid to Families with Dependent Children work programs; Child Nutrition; Food Stamps; Social Services Block Grants; Vocational Rehabilitation State Grants; Foster Care, Adoption Assistance, and Independent Living; Family Support Welfare Services; and Child Support Enforcement. ''Federal private sector mandate'' includes a regulation that ''would impose an enforceable duty upon the private sector, except (i) a condition of Federal assistance or (ii) a duty arising from participation in a voluntary Federal program.''

The designation of critical habitat does not impose a legally binding duty on non-Federal Government entities or private parties. Under the Act, the only regulatory effect is that Federal agencies must ensure that their actions do not destroy or adversely modify critical habitat under section 7. While non-Federal entities that receive Federal funding, assistance, or permits, or that otherwise require approval or authorization from a Federal agency for an action, may be indirectly impacted by the designation of critical habitat, the legally binding duty to avoid destruction or adverse modification of critical habitat rests squarely on the Federal agency. Furthermore, to the extent that non-Federal entities are indirectly impacted because they receive Federal assistance or participate in a voluntary Federal aid program, the Unfunded Mandates Reform Act would not apply, nor would critical habitat shift the costs of the large entitlement programs listed above onto State governments.

(2) We do not believe that this rule will significantly or uniquely affect small governments because the lands within the critical habitat designations are primarily Federally or privately owned and are managed by the State of Missouri and, therefore, do not fall within the jurisdiction of small governments. Therefore, a Small Government Agency Plan is not required.

Takings—Executive Order 12630

In accordance with E.O. 12630 (Government Actions and Interference with Constitutionally Protected Private Property Rights), we have analyzed the potential takings implications of designating critical habitat for Big Creek crayfish and St. Francis River crayfish in a takings implications assessment. The Act does not authorize the Service to regulate private actions on private lands or confiscate private property as a result of critical habitat designation. Designation of critical habitat does not affect land ownership, or establish any closures, or restrictions on use of or access to the designated areas. Furthermore, the designation of critical habitat does not affect landowner actions that do not require Federal funding or permits, nor does it preclude development of habitat conservation programs or issuance of incidental take permits to permit actions that do require

Federal funding or permits to go forward. However, Federal agencies are prohibited from carrying out, funding, or authorizing actions that would destroy or adversely modify critical habitat. A takings implications assessment has been completed for the designation of critical habitat for Big Creek crayfish and the St. Francis River crayfish, and it concludes that the designations of critical habitat do not pose significant takings implications for lands within or affected by the designations.

Federalism—Executive Order 13132

In accordance with E.O. 13132 (Federalism), this rule does not have significant Federalism effects. A federalism summary impact statement is not required. In keeping with Department of the Interior and Department of Commerce policy, we requested information from, and coordinated development of the critical habitat designations with, appropriate State resource agencies and incorporated comments when applicable into this final rule. From a federalism perspective, the designation of critical habitat directly affects only the responsibilities of Federal agencies. The Act imposes no other duties with respect to critical habitat, either for States and local governments, or for anyone else. As a result, the rule does not have substantial direct effects either on the States, or on the relationship between the national government and the States, or on the distribution of powers and responsibilities among the various levels of government. The designations may have some benefit to these governments because the areas that contain the features essential to the conservation of the species are more clearly defined, and the physical or biological features of the habitat necessary for the conservation of the species are specifically identified. This information does not alter where and what federally sponsored activities may occur. However, it may assist State and local governments in long-range planning because they no longer have to wait for case-by-case section 7 consultations to occur.

Where State and local governments require approval or authorization from a Federal agency for actions that may affect critical habitat, consultation under section 7(a)(2) of the Act will be required. While non-Federal entities that receive Federal funding, assistance, or permits, or that otherwise require approval or authorization from a Federal agency for an action, may be indirectly impacted by the designation of critical habitat, the legally binding duty to avoid destruction or adverse modification of critical habitat rests squarely on the Federal agency.

Civil Justice Reform—Executive Order 12988

In accordance with Executive Order 12988 (Civil Justice Reform), the Office of the Solicitor has determined that the rule will not unduly burden the judicial system and that it meets the requirements of sections 3(a) and 3(b)(2) of the Order. We are designating critical habitat in accordance with the provisions of the Act. To assist the public in understanding the habitat needs of the species, this rule identifies the physical or biological features essential to the conservation of the species. The designated areas of critical habitat are presented on maps, and the rule provides several options for the interested public to obtain more detailed location information, if desired.

Paperwork Reduction Act of 1995 (44 U.S.C. 3501 et seq.)

This rule does not contain information collection requirements, and a submission to the Office of Management and Budget (OMB) under the Paperwork Reduction Act of 1995 (44 U.S.C. 3501 *et seq.*) is not required. We may not conduct or sponsor and you are not required to respond to a collection of information unless it displays a currently valid OMB control number.

National Environmental Policy Act (32 U.S.C. 4321 et seq.)

Regulations adopted pursuant to section 4(a) of the Act are exempt from the National Environmental Policy Act (NEPA; 42 U.S.C. 4321 *et seq.*) and do not require an environmental analysis under NEPA. We published a notice outlining our reasons for this determination in the **Federal Register** on October 25, 1983 (48 FR 49244). This includes listing, delisting, and reclassification rules, as well as critical habitat designations and species-specific protective regulations promulgated concurrently with a decision to list or reclassify a species as threatened. The courts have upheld this position (*e.g., Douglas County* v. *Babbitt,* 48 F.3d 1495 (9th Cir. 1995) (critical habitat); *Center for Biological Diversity* v. *U.S. Fish and Wildlife Service,* 2005 WL 2000928 (N.D. Cal. Aug. 19, 2005) (concurrent 4(d) rule)).

Government-To-Government Relationship With Tribes

In accordance with the President's memorandum of April 29, 1994 (Government-to-Government Relations with Native American Tribal Governments; 59 FR 22951), Executive Order 13175 (Consultation and Coordination with Indian Tribal Governments), and the Department of the Interior's manual at 512 DM 2, we readily acknowledge our responsibility to communicate meaningfully with federally recognized Tribes on a government-to-government basis. In accordance with Secretarial Order 3206 of June 5, 1997 (American Indian Tribal Rights, Federal-Tribal Trust Responsibilities, and the Endangered Species Act), we readily acknowledge our responsibilities to work directly with Tribes in developing programs for healthy ecosystems, to acknowledge that Tribal lands are not subject to the same controls as Federal public lands, to remain sensitive to Indian culture, and to make information available to Tribes. We have determined that no Tribal lands fall within the boundaries of the final critical habitat designation for the Big Creek crayfish or for the St. Francis River crayfish, so no Tribal lands will be affected by the designations.

References Cited

A complete list of references cited in this rulemaking is available on the internet at *https://www.regulations.gov* and upon request from the Missouri Ecological Services Field Office (see **FOR FURTHER INFORMATION CONTACT**).

Authors

The primary authors of this final rule are the staff members of the Fish and Wildlife Service's Species Assessment Team and the Missouri Ecological Services Field Office.

List of Subjects in 50 CFR Part 17

Endangered and threatened species, Exports, Imports, Plants, Reporting and recordkeeping requirements, Transportation, Wildlife.

Regulation Promulgation

Accordingly, we amend part 17, subchapter B of chapter I, title 50 of the Code of Federal Regulations, as set forth below:

PART 17—ENDANGERED AND THREATENED WILDLIFE AND PLANTS

■ 1. The authority citation for part 17 continues to read as follows:

Authority: 16 U.S.C. 1361–1407; 1531–1544; and 4201–4245, unless otherwise noted.

■ 2. Amend § 17.11, in paragraph (h), by adding, in alphabetical order under CRUSTACEANS, entries for ''Crayfish, Big Creek'' and ''Crayfish, St. Francis

River'' to the List of Endangered and Threatened Wildlife to read as follows:

§ 17.11 Endangered and threatened wildlife.

* * * * *

Common name	Scientific name	Where listed	Status	Listing citations and applicable rules
*	*	*	*	*
CRUSTACEANS				
*	*	*	*	*
Crayfish, Big Creek	*Faxonius peruncus*	Wherever found	T	88 FR [insert **Federal Register** page where the document begins], 4/27/2023; 50 CFR 17.46(c);[4d] 50 CFR 17.95(h).[CH]
*	*	*	*	*
Crayfish, St. Francis River.	*Faxonius quadruncus*	Wherever found	T	88 FR [insert **Federal Register** page where the document begins], 4/27/2023; 50 CFR 17.46(c);[4d] 50 CFR 17.95(h).[CH]
*	*	*	*	*

■ 3. Amend § 17.46 by adding paragraph (c) to read as follows:

§ 17.46 Special rules—crustaceans.

* * * * *

(c) Big Creek crayfish (*Faxonius peruncus*) and St. Francis River crayfish (*Faxonius quadruncus*).

(1) *Prohibitions.* The following prohibitions that apply to endangered wildlife also apply to the Big Creek crayfish and the St. Francis River crayfish. Except as provided under paragraph (c)(2) of this section and §§ 17.4 and 17.5, it is unlawful for any person subject to the jurisdiction of the United States to commit, to attempt to commit, to solicit another to commit, or cause to be committed, any of the following acts in regard to this species:

(i) Import or export, as set forth at § 17.21(b) for endangered wildlife.

(ii) Take, as set forth at § 17.21(c)(1) for endangered wildlife. Activities that could result in take are those that:

(A) Impact crayfish habitat, riparian areas adjacent to crayfish sites, or habitat between connecting sites such that the species' reproduction or survival will be impacted or the effects of woodland crayfish invasion will be exacerbated. Such activities include, but are not limited to:

(*1*) Construction of instream low-water crossings;

(*2*) Destruction of riparian habitat that results in excessive sedimentation;

(*3*) Bridge construction; and

(*4*) Gravel mining.

(B) Lead to the introduction of heavy metals into streams. Such activities include, but are not limited to, heavy metal mining.

(C) Appreciably negatively affect water quality, chemistry, or quantity such that the species' reproduction or survival will be impacted. Such activities may include, but are not limited to, the release of wastewater effluent and agricultural runoff.

(D) Impact hydrological flows such that the species' reproduction or survival will be impacted. Such activities include, but are not limited to, construction of dams, modification of stream channels, and surface and groundwater withdrawals.

(E) Facilitate the spread of woodland crayfish or introduce additional woodland crayfish in occupied Big Creek crayfish or St. Francis River crayfish stream reaches. Such activities may include, but are not limited to, bait bucket dumping.

(iii) Possession and other acts with unlawfully taken specimens, as set forth at § 17.21(d)(1) for endangered wildlife.

(iv) Interstate or foreign commerce in the course of commercial activity, as set forth at § 17.21(e) for endangered wildlife.

(v) Sale or offer for sale, as set forth at § 17.21(f) for endangered wildlife.

(2) *Exceptions from prohibitions.* In regard to this species, you may:

(i) Conduct activities as authorized by a permit under § 17.32.

(ii) Take, as set forth at § 17.21(c)(2) through (c)(4) for endangered wildlife.

(iii) Take, as set forth at § 17.31(b).

(iv) Take incidental to an otherwise lawful activity caused by:

(A) Restoration activities or other activities that will result in an overall benefit to one or both of the species or their habitat that are completed in coordination with the Missouri Ecological Services Field Office. Such activities include, but are not limited to, stream bank stabilization, habitat restoration, heavy metal remediation, and replacement of low water crossings that obstruct movement of aquatic organisms with crossings that facilitate the movement of aquatic species (aquatic organism passages).

(B) A person conducting research or education under a valid Missouri Department of Conservation Wildlife Collector's permit.

(v) Possess and engage in other acts with unlawfully taken wildlife, as set forth at § 17.21(d)(2) for endangered wildlife.

■ 4. In § 17.95 amend paragraph (h), by:

■ a. Adding an entry for ''Big Creek Crayfish (*Faxonius peruncus*)'' following the entry for ''Pecos amphipod (*Gammarus pecos*)''; and

■ b. Adding an entry for ''St. Francis River Crayfish (*Faxonius quadruncus*)'' following the entry for ''Slenderclaw Crayfish (*Cambarus cracens*)''.

The additions read as follows:

§ 17.95 Critical habitat—fish and wildlife.

* * * * *

(h) *Crustaceans.*

* * * * *

Big Creek Crayfish (*Faxonius peruncus*)

(1) The critical habitat unit is depicted for Iron, Madison, St. Francois, Washington, and Wayne Counties in Missouri, on the map in this entry.

(2) Within the critical habitat unit, the physical or biological features essential to the conservation of the Big Creek crayfish consist of the following components:

(i) Stream flow velocity generally between 0 and 1.1 feet per second (ft/s) (0 and 0.35 meters per second (m/s)).

(ii) Stream depths generally between 0.2 and 1.6 feet (0.06 and 0.49 meters).

(iii) Water temperatures between 34 and 84 °F (1.1 and 28.9 °C).

(iv) Adequately low stream embeddedness so that spaces under rocks and cavities in gravel remain available to the Big Creek crayfish.

(v) An available forage and prey base consisting of invertebrates, periphyton, and plant detritus.

(vi) Connectivity among occupied stream reaches of the Big Creek crayfish (both within and among occupied subwatersheds).

(vii) Adequately low ratios or densities of nonnative species that allow for maintaining populations of the Big Creek crayfish.

(3) Critical habitat does not include manmade structures (such as buildings, aqueducts, runways, roads, and other paved areas) and the land on which they are located existing within the legal boundaries on May 30, 2023.

(4) The National Hydrography Dataset Plus (NHD*Plus*) was the geospatial data used to delineate critical habitat. NHD*Plus* is a national geospatial surface water framework that integrates the National Hydrography Dataset with the National Elevation Dataset and the Watershed Boundary Dataset. NHD*Plus* uses medium resolution (1:100,000-scale) data with a geographic projection and NAD83 datum. Critical habitat was delineated by including all streams within subwatersheds (at the 12-digit hydrologic unit level) occupied by the Big Creek crayfish. Occupied watersheds were defined using data from the Missouri Department of Conservation; the entire St. Francis River upstream of 37.091254N, 90.447212W is also considered occupied as a migratory route. The map in this entry, as modified by any accompanying regulatory text, establishes the boundaries of the critical habitat designation. The coordinates or plot points or both on which the map is based are available to the public at *https://www.regulations.gov* under Docket No. FWS–R3–ES–2019–0020 and at the Missouri Ecological Services Field Office. You may obtain field office location information by contacting one of the Service regional offices, the addresses of which are listed at 50 CFR 2.2.

(5) Big Creek Crayfish Unit—Iron, Madison, St. Francois, Washington, and Wayne Counties, Missouri.

(i) The unit consists of all of the streams (approximately 1,069 river miles (1,720 kilometers)) upstream of Wappapello Dam in the following subwatersheds (numbers in parentheses represent the 12-digit hydrologic codes): Big Lake Creek-St. Francis River (080202020503), Blankshire Branch-St. Francis River (080202020204), Captain Creek-St. Francis River (080202020405), Cedar Bottom Creek-St. Francis River (080202020402), Clark Creek (080202020407), Cedar Bottom Creek (080202020501), Crane Pond Creek (080202020303), Headwaters St. Francis River (080202020201), Headwaters Twelvemile Creek (080202020403), Leatherwood Creek-St. Francis River (080202020406), Lower Big Creek (080202020304), Middle Big Creek (080202020302), Saline Creek-Little St. Francis River (080202020102), Turkey Creek-St. Francis River (080202020210), Twelvemile Creek (080202020404), and Upper Big Creek (080202020301). The unit also consists of the entire St. Francis River upstream of 37.091254N, 90.447212W. The unit does not include any areas of adjacent land. This unit includes stream habitat up to bank full height.

(ii) Map of Big Creek Crayfish Unit of Big Creek crayfish critical habitat follows:

BILLING CODE 4333–15–P

Figure 1 for Big Creek Crayfish (*Faxonius peruncus*) paragraph (5)(ii)

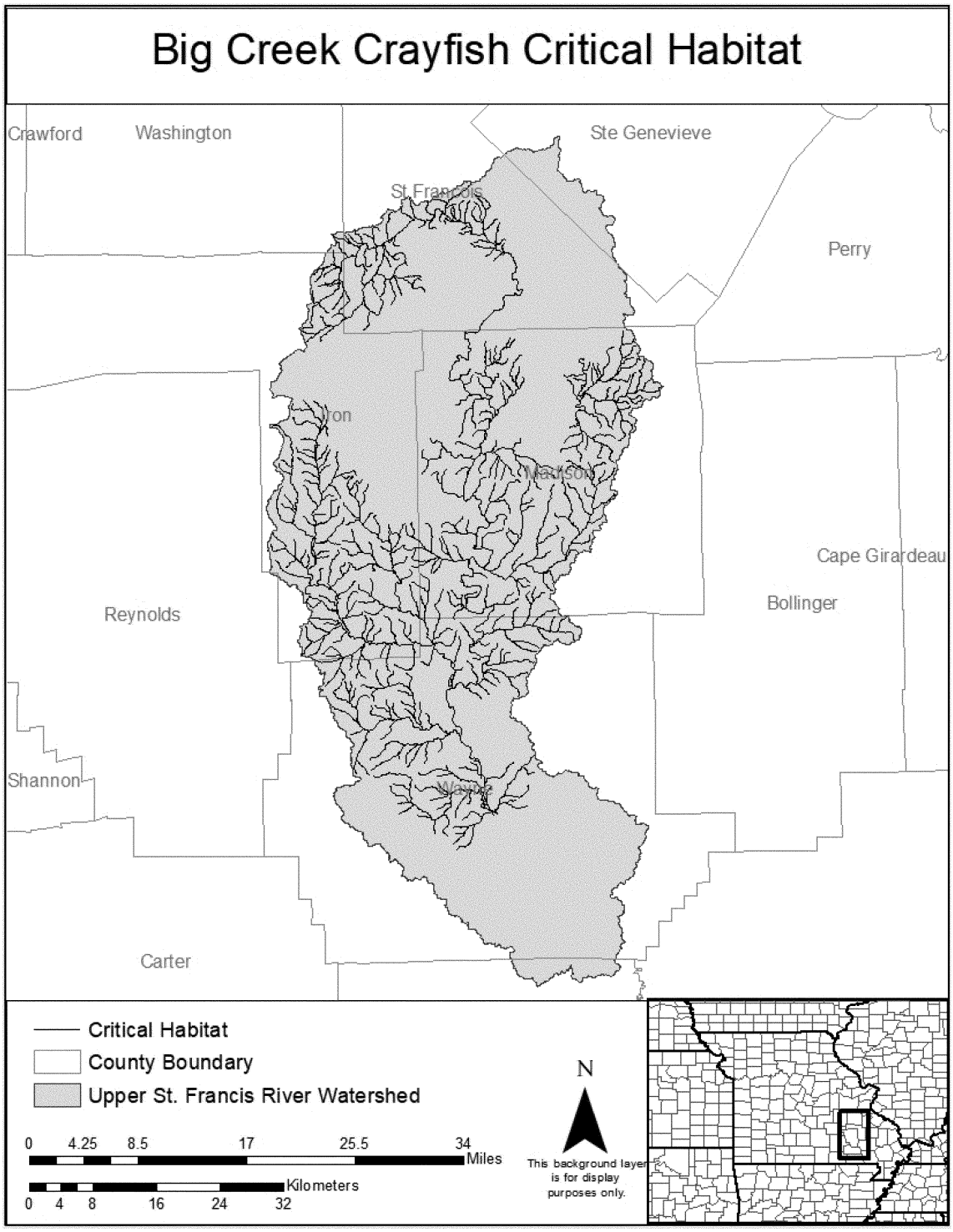

* * * * *

BILLING CODE 4333–15–C

St. Francis River Crayfish (*Faxonius quadruncus*)

(1) The critical habitat unit is depicted for Iron, Madison, St. Francois, Washington, and Wayne Counties in Missouri, on the map in this entry.

(2) Within the critical habitat unit, the physical or biological features essential to the conservation of the St. Francis River crayfish consist of the following components:

(i) Stream flow velocity generally between 0 and 1.1 feet per second (ft/s) (0 and 0.35 meters per second (m/s)).

(ii) Stream depths generally between 0.2 and 1.7 feet (0.06 and 0.52 meters).

(iii) Water temperatures between 34 and 84 °F (1.1 and 28.9 °C).

(iv) Adequately low stream embeddedness so that spaces under rocks and cavities in gravel remain available to the St. Francis River crayfish.

(v) An available forage and prey base consisting of invertebrates, periphyton, and plant detritus.

(vi) Connectivity among occupied stream reaches of the St. Francis River

crayfish (both within and among occupied subwatersheds).

(vii) Adequately low ratios or densities of nonnative species that allow for maintaining populations of the St. Francis River crayfish.

(3) Critical habitat does not include manmade structures (such as buildings, aqueducts, runways, roads, and other paved areas) and the land on which they are located existing within the legal boundaries on May 30, 2023.

(4) The National Hydrography Dataset Plus (NHD*Plus*) was the geospatial data used to delineate critical habitat. NHD*Plus* is a national geospatial surface water framework that integrates the National Hydrography Dataset with the National Elevation Dataset and the Watershed Boundary Dataset. NHD*Plus* uses medium resolution (1:100,000-scale) data with a geographic projection and NAD83 Datum. Critical habitat was delineated by including all streams within subwatersheds (at the 12-digit hydrologic unit level) occupied by the St. Francis River crayfish. Occupied watersheds were defined using data from the Missouri Department of Conservation; the entire St. Francis River upstream of 36.982104N, 90.335400W is also considered occupied as a migratory route. The map in this entry, as modified by any accompanying regulatory text, establishes the boundaries of the critical habitat designation. The coordinates or plot points or both on which the map is based are available to the public at *https://www.regulations.gov* under Docket No. FWS–R3–ES–2019–0020 and at the Missouri Ecological Services Field Office. You may obtain field office location information by contacting one of the Service regional offices, the addresses of which are listed at 50 CFR 2.2.

(5) St. Francis River Crayfish Unit—Iron, Madison, St. Francois, Washington, and Wayne Counties, Missouri.

(i) The unit consists of all of the streams (approximately 1,043 river miles (1,679 kilometers)) upstream of Wappapello Dam in the following subwatersheds (numbers in parentheses represent the 12-digit hydrologic codes): Blankshire Branch-St. Francis River (80202020204), Captain Creek-St. Francis River (80202020405), Cedar Bottom Creek-St. Francis River (80202020402), Headwaters St. Francis River (80202020201), Headwaters Stouts Creek (80202020207), Hubble Creek-St. Francis River (80202020502), Leatherwood Creek-St. Francis River (80202020406), Little St. Francis River (80202020103), Lost Creek (80202020507), Marble Creek (80202020401), Musco Creek-Little St. Francis River (80202020101), O'Bannon Creek-St. Francis River (80202020206), Saline Creek-Little St. Francis River (80202020102), Stouts Creek (80202020208), Turkey Creek-St. Francis River (80202020210), and Wachita Creek-St. Francis River (80202020209). The unit also consists of the entire St. Francis River upstream of 36.982104N, 90.335400W. The unit does not include any areas of adjacent land. The Upper St. Francis River Watershed Unit includes stream habitat up to bank full height.

(ii) Map of St. Francis River Crayfish Unit of St. Francis River crayfish critical habitat follows:

BILLING CODE 4333–15–P

Figure 1 for St. Francis River Crayfish (*Faxonius quadruncus*) paragraph (5)(ii)

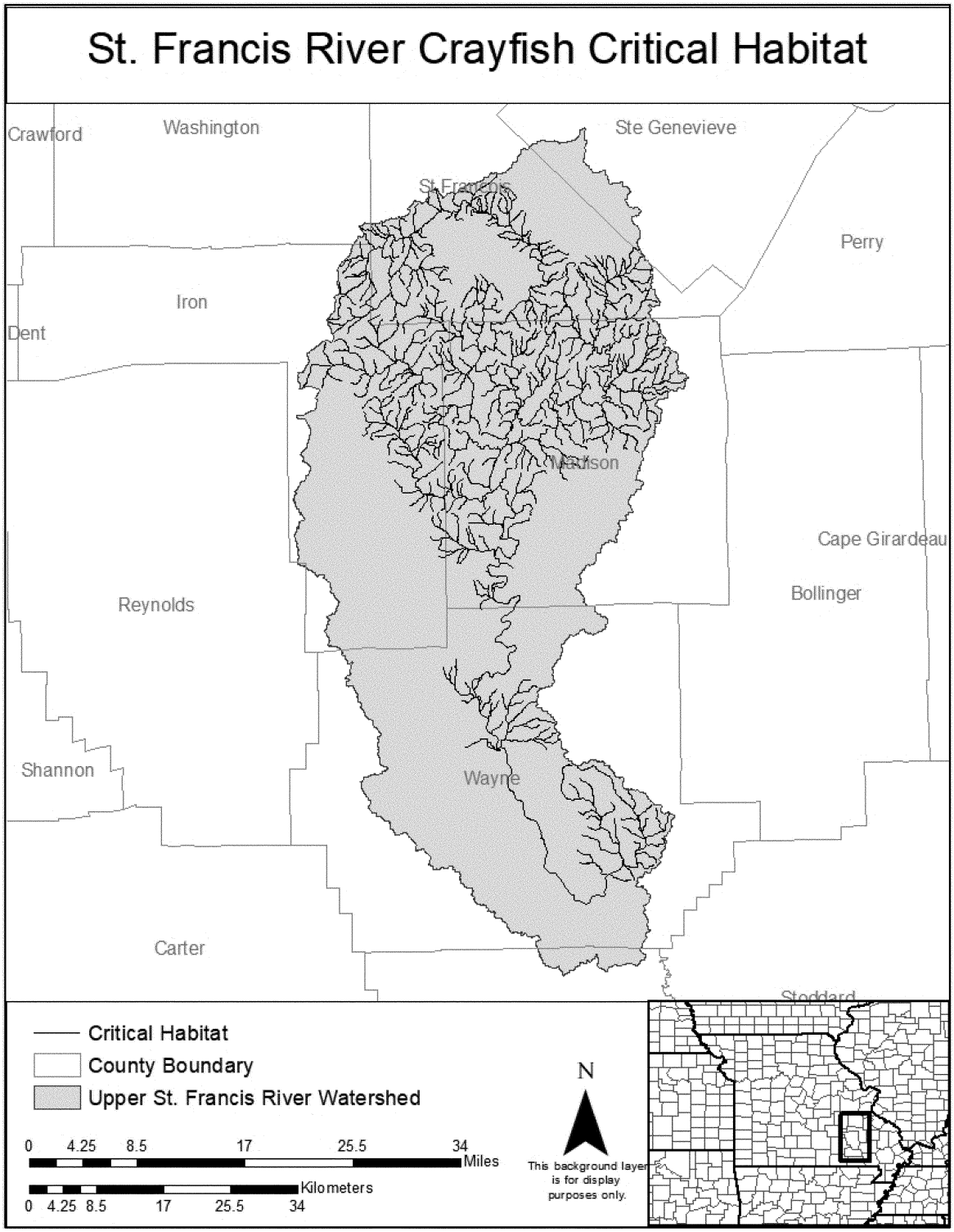

* * * * *

Wendi Weber,

Acting Director, U.S. Fish and Wildlife Service.

[FR Doc. 2023–08849 Filed 4–26–23; 8:45 am]

BILLING CODE 4333–15–C

DEPARTMENT OF THE INTERIOR

Fish and Wildlife Service

50 CFR Part 17

[Docket No. FWS–R2–ES–2020–0015; FF09E21000 FXES1111090FEDR 234]

RIN 1018–BD20

Endangered and Threatened Wildlife and Plants; Endangered Species Status for South Llano Springs Moss

AGENCY: Fish and Wildlife Service, Interior.

ACTION: Final rule.

SUMMARY: We, the U.S. Fish and Wildlife Service (Service), determine endangered species status under the Endangered Species Act of 1973 (Act), as amended, for the South Llano springs moss (*Donrichardsia macroneuron*), an aquatic moss species from Edwards County, Texas. We are excluding the single unit of proposed critical habitat, and, therefore, no critical habitat is being designated for the South Llano springs moss. This rule adds the species to the List of Endangered and Threatened Plants and applies the protections of the Act to the species.

DATES: This rule is effective May 30, 2023.

ADDRESSES: This final rule is available on the internet at *https://www.regulations.gov.* Comments and materials we received, as well as supporting documentation we used in preparing this rule, are available for public inspection at *https://www.regulations.gov at* Docket No. FWS–R2–ES–2020–0015.

FOR FURTHER INFORMATION CONTACT: Karen Myers, Field Supervisor, U.S. Fish and Wildlife Service, Austin Ecological Services Field Office, 1505 Ferguson Lane, Austin, Texas; telephone 512–937–7371. Individuals in the United States who are deaf, deafblind, hard of hearing, or have a speech disability may dial 711 (TTY, TDD, or TeleBraille) to access telecommunications relay services. Individuals outside the United States should use the relay services offered within their country to make international calls to the point-of-contact in the United States.

SUPPLEMENTARY INFORMATION:

Executive Summary

Why we need to publish a rule. Under the Act, a species warrants listing if it meets the definition of an endangered species (in danger of extinction throughout all or a significant portion of its range) or a threatened species (likely to become endangered within the foreseeable future throughout all or a significant portion of its range). If we determine that a species warrants listing, we must list the species promptly and designate the species' critical habitat to the maximum extent prudent and determinable. We have determined that the South Llano springs moss meets the definition of an endangered species; therefore, we are listing it as such. Both listing a species as an endangered or threatened species and designating critical habitat can be completed only by issuing a rule through the Administrative Procedure Act rulemaking process.

What this document does. This rule lists the South Llano springs moss (*Donrichardsia macroneuron*) as an endangered species under the Act. We are excluding the single proposed critical habitat unit for the species.

The basis for our action. Under the Act, we may determine that a species is an endangered or threatened species because of any of five factors: (A) The present or threatened destruction, modification, or curtailment of its habitat or range; (B) overutilization for commercial, recreational, scientific, or educational purposes; (C) disease or predation; (D) the inadequacy of existing regulatory mechanisms; or (E) other natural or manmade factors affecting its continued existence. We have determined that increased groundwater pumping from the Edwards-Trinity aquifer that supplies water for the springs that the South Llano springs moss is dependent on, as well as flash floods, sedimentation, invasive plant species, a single population, small population size, and lack of genetic diversity, and cumulative impacts from these threats, pose threats to this plant species to the degree that listing it as an endangered species under the Act is warranted.

Section 4(a)(3) of the Act requires the Secretary of the Interior (Secretary) to designate critical habitat concurrent with listing to the maximum extent prudent and determinable. Section 3(5)(A) of the Act defines critical habitat as (i) the specific areas within the geographical area occupied by the species, at the time it is listed, on which are found those physical or biological features (I) essential to the conservation of the species and (II) which may require special management considerations or protections; and (ii) specific areas outside the geographical area occupied by the species at the time it is listed, upon a determination by the Secretary that such areas are essential for the conservation of the species. Section 4(b)(2) of the Act states that the Secretary must make the designation on the basis of the best scientific data available and after taking into consideration the economic impact, the impact on national security, and any other relevant impacts of specifying any particular area as critical habitat.

Previous Federal Actions

Please refer to the proposed listing and critical habitat rule (86 FR 53609; September 28, 2021) for a detailed description of previous Federal actions concerning this species.

Summary of Changes From the Proposed Rule

We reviewed the comments related to our proposed listing determination and critical habitat for the South Llano springs moss (see Summary of Comments and Recommendations, below) and completed our analysis of areas considered for exclusion under section 4(b)(2) of the Act. This final rule incorporates changes from our proposed listing and critical habitat rule (86 FR 53609; September 28, 2021) based on the exclusion analysis described in *Exclusions Based on Other Relevant Impacts,* below.

Specifically, we have determined that the benefits of excluding critical habitat outweigh the benefits of inclusion. For a complete description of our exclusion analysis, see Consideration of Impacts under Section 4(b)(2) of the Act, below. Based on our analysis, we are excluding the Upper South Llano River Unit (0.48 acre (ac) (0.19 hectares (ha))) of proposed critical habitat. As this was the only unit proposed for designation as critical habitat, no critical habitat is designated for this species in this rule.

Because we are not designating critical habitat for this species, we present an abbreviated list of determinations under Required Determinations in this rule (see below). In that portion of this rule, we present only those determinations that apply to listing actions due to the Act's requirement that listing decisions be made ''solely on the basis of the best scientific and commercial data available'' (16 U.S.C. 1533(b)(1)(A)), instead of the longer list of determinations that apply to critical habitat designations.

Supporting Documents

A species status assessment (SSA) team prepared an SSA report for the South Llano springs moss. The SSA team was composed of Service biologists, in consultation with other species experts. The SSA report represents a compilation of the best

scientific and commercial data available concerning the status of the species, including the impacts of past, present, and future factors (both negative and beneficial) affecting the species.

In accordance with our joint policy on peer review published in the **Federal Register** on July 1, 1994 (59 FR 34270), and our August 22, 2016, memorandum updating and clarifying the role of peer review of listing actions under the Act, we sought the expert opinions of four appropriate specialists regarding the SSA. We received one response. We also sent the SSA report to partners, including scientists with expertise regarding this species, for review. We received review from one partner (Texas Parks and Wildlife Department).

I. Final Listing Determination

Background

The South Llano springs moss is an aquatic moss that grows on submerged or partially submerged rocks. The deep, loosely interwoven mats are blue-green to blackish-brown when shaded and yellow-green when exposed to full sun. Like all mosses, the South Llano springs moss forms clonal colonies of leaf-bearing stems.

The South Llano springs moss has an extremely limited range: it has only been documented in two locations and is thought to be extirpated from one of those. The remaining extant site is from Seven Hundred Springs, on the South Llano River in Edwards County, Texas. The extirpated site, referred to as the Redfearn site, was about 5 kilometers (km) (3.1 miles (mi)) downstream from Seven Hundred Springs in Kimble County, Texas, although the exact location is unknown. Both sites occur within the Edwards Plateau. Researchers visited 10 other springs in the Llano and South Llano River watersheds in 1978 and 1979 but found no additional populations (Wyatt and Stoneburner 1980, pp. 514, 516).

The South Llano springs moss was discovered at Seven Hundred Springs in 1932 and was most recently confirmed there in 1979 (Wyatt and Stoneburner 1980, entire). When last observed in 1979, the South Llano springs moss was abundantly dispersed in the spring outflow, partially submerged in shaded areas within an area of about 10 by 100 meters (m) (33 by 328 feet (ft)) between the springs and the river below on privately owned land (Wyatt and Stoneburner 1980, p. 516). Observation of the habitat from the opposite side of the river in 2017 indicated that the habitat appears to be in excellent condition (Service 2017, entire). This is the best available information we have for this site; consequently, we consider the Seven Hundred Springs population to be extant. The South Llano springs moss was last documented at the Redfearn site in 1971. The two specimen labels from these collections state that they were collected ''1 mile south of Telegraph'' with one specimen collected on a dam and the other from limestone at the edge of the creek. On topographic maps, Telegraph is a location consisting of a single store that is not directly along the river; however, there is a road connecting Telegraph to the South Llano River with a bridge, and this may be the location from which Redfearn was measuring. Due to the vague location description, there is uncertainty around the exact location of the Redfearn site. In 2017, we conducted surveys along 5.7 km of the South Llano River, including the 2.25 km in which we believe Redfearn collected his specimens. All aquatic moss species encountered were collected and a sample of each of the four species encountered was sent to a bryologist at the Missouri Botanical Garden for identification. None of the species collected were found to be the South Llano springs moss. This is the best available information we have for this site; consequently, we consider the Redfearn population to be extirpated. It is possible that the species does not occur anywhere else. However, few surveys for this species have been conducted. Consequently, it is possible that this species occurs elsewhere along Paint Creek or the South Llano River. The best available data indicate that only the Seven Hundred Springs population persists.

A thorough review of the taxonomy, life history, and ecology of the South Llano springs moss is presented in the SSA report (version 1.1; Service 2023, entire).

Regulatory and Analytical Framework

Regulatory Framework

Section 4 of the Act (16 U.S.C. 1533) and the implementing regulations in title 50 of the Code of Federal Regulations set forth the procedures for determining whether a species is an endangered species or a threatened species, issuing protective regulations for threatened species, and designating critical habitat for endangered and threatened species. In 2019, jointly with the National Marine Fisheries Service, the Service issued a final rule that revised the regulations in 50 CFR part 424 regarding how we add, remove, and reclassify endangered and threatened species and the criteria for designating listed species' critical habitat (84 FR 45020; August 27, 2019). On the same day, the Service also issued final regulations that, for species listed as threatened species after September 26, 2019, eliminated the Service's general protective regulations automatically applying to threatened species the prohibitions that section 9 of the Act applies to endangered species (84 FR 44753; August 27, 2019).

The Act defines an ''endangered species'' as a species that is in danger of extinction throughout all or a significant portion of its range, and a ''threatened species'' as a species that is likely to become an endangered species within the foreseeable future throughout all or a significant portion of its range. The Act requires that we determine whether any species is an endangered species or a threatened species because of any of the following factors:

(A) The present or threatened destruction, modification, or curtailment of its habitat or range;

(B) Overutilization for commercial, recreational, scientific, or educational purposes;

(C) Disease or predation;

(D) The inadequacy of existing regulatory mechanisms; or

(E) Other natural or manmade factors affecting its continued existence.

These factors represent broad categories of natural or human-caused actions or conditions that could have an effect on a species' continued existence. In evaluating these actions and conditions, we look for those that may have a negative effect on individuals of the species, as well as other actions or conditions that may ameliorate any negative effects or may have positive effects.

We use the term ''threat'' to refer in general to actions or conditions that are known to or are reasonably likely to negatively affect individuals of a species. The term ''threat'' includes actions or conditions that have a direct impact on individuals (direct impacts), as well as those that affect individuals through alteration of their habitat or required resources (stressors). The term ''threat'' may encompass—either together or separately—the source of the action or condition or the action or condition itself.

However, the mere identification of any threat(s) does not necessarily mean that the species meets the statutory definition of an ''endangered species'' or a ''threatened species.'' In determining whether a species meets either definition, we must evaluate all identified threats by considering the expected response by the species and the effects of the threats—in light of those actions and conditions that will

ameliorate the threats—on an individual, population, and species level. We evaluate each threat and its expected effects on the species, then analyze the cumulative effect of all of the threats on the species as a whole. We also consider the cumulative effect of the threats in light of those actions and conditions that will have positive effects on the species, such as any existing regulatory mechanisms or conservation efforts. The Secretary determines whether the species meets the definition of an ''endangered species'' or a ''threatened species'' only after conducting this cumulative analysis and describing the expected effect on the species now and in the foreseeable future.

The Act does not define the term ''foreseeable future,'' which appears in the statutory definition of ''threatened species.'' Our implementing regulations at 50 CFR 424.11(d) set forth a framework for evaluating the foreseeable future on a case-by-case basis. The term ''foreseeable future'' extends only so far into the future as the Services can reasonably determine that both the future threats and the species' responses to those threats are likely. In other words, the foreseeable future is the period of time in which we can make reliable predictions. ''Reliable'' does not mean ''certain''; it means sufficient to provide a reasonable degree of confidence in the prediction. Thus, a prediction is reliable if it is reasonable to depend on it when making decisions.

It is not always possible or necessary to define the foreseeable future as a particular number of years. Analysis of the foreseeable future uses the best scientific and commercial data available and should consider the timeframes applicable to the relevant threats and to the species' likely responses to those threats in view of its life-history characteristics. Data that are typically relevant to assessing the species' biological response include species-specific factors such as lifespan, reproductive rates or productivity, certain behaviors, and other demographic factors.

Analytical Framework

The SSA report documents the results of our comprehensive biological review of the best scientific and commercial data regarding the status of the species, including an assessment of the potential threats to the species. The SSA report does not represent our decision on whether the species should be listed as an endangered or threatened species under the Act. However, it does provide the scientific basis that informs our regulatory decisions, which involve the further application of standards within the Act and its implementing regulations and policies. The following is a summary of the key results and conclusions from the SSA report; the full SSA report can be found at Docket FWS–R2–ES–2020–0015 on *https://www.regulations.gov*.

To assess South Llano springs moss' viability, we used the three conservation biology principles of resiliency, redundancy, and representation (Shaffer and Stein 2000, pp. 306–310). Briefly, resiliency supports the ability of the species to withstand environmental and demographic stochasticity (for example, wet or dry, warm or cold years), redundancy supports the ability of the species to withstand catastrophic events (for example, droughts, large pollution events), and representation supports the ability of the species to adapt over time to long-term changes in the environment (for example, climate changes). In general, the more resilient and redundant a species is and the more representation it has, the more likely it is to sustain populations over time, even under changing environmental conditions. Using these principles, we identified the species' ecological requirements for survival and reproduction at the individual, population, and species levels, and described the beneficial and risk factors influencing the species' viability.

The SSA process can be categorized into three sequential stages. During the first stage, we evaluated the individual species' life-history needs. The next stage involved an assessment of the historical and current condition of the species' demographics and habitat characteristics, including an explanation of how the species arrived at its current condition. The final stage of the SSA involved making predictions about the species' responses to positive and negative environmental and anthropogenic influences. Throughout all of these stages, we used the best available information to characterize viability as the ability of a species to sustain populations in the wild over time. We use this information to inform our regulatory decision.

Summary of Biological Status and Threats

In this discussion, we review the biological condition of the species and its resources, and the threats that influence the species' current and future condition, in order to assess the species' overall viability and the risks to that viability.

Based on the conditions of the only known current and historical populations, the South Llano springs moss requires a constant flow of mineral-rich spring water or spring-fed river water over shallow limestone rocks. Seven Hundred Springs and the areas thought to contain the Redfearn sites are supported by spring flows within the Edwards-Trinity aquifer and the South Llano River watershed (Seven Hundred Springs and Big Paint Springs). These springs have never ceased flowing in recorded history. Water from these springs emerges at a very consistent temperature and is rich in travertine minerals. Rocks and plants immersed in the upper South Llano River quickly become encrusted with travertine- or tufa-like mineral deposits, to an unusual degree not seen in most springs in the Edwards-Trinity aquifer (Service 2017, p. 2). Thus, it is possible that high mineral concentrations, or the precipitation of minerals from solution, could be requirements for the establishment and growth of South Llano springs moss individuals.

The water temperature of Seven Hundred Springs was consistently 21.5 degrees Celsius (°C) (70.7 degrees Fahrenheit (°F)) in June, and the pH ranged from 7.0 to 7.2 (Wyatt and Stoneburner 1980, p. 516). The species occurred in both shaded and exposed niches at Seven Hundred Springs (Wyatt and Stoneburner 1980, p. 516). Associated vascular plant species included maidenhair fern (*Adiantum capillus-veneris*), southern shield fern (*Thelypteris kunthii*), watercress (*Nasturtium officinale*), and members of the mint family (Lamiaceae) and composite family (Asteraceae) (Wyatt and Stoneburner 1980, p. 516). Associated moss species included *Hygroamblystegium tenax* and *Eucladium verticillatum* (Wyatt and Stoneburner 1980, p. 517).

Mosses closely related to the South Llano springs moss reproduce both sexually and asexually. However, there is no evidence that sexual reproduction is occurring in the single remaining known site of occurrence, as no plants with female reproductive structures were observed in the wild population or during a 16-month propagation study in 1978 and 1979 (Wyatt and Stoneburner 1980, p. 517). The plants cultivated in captivity produced only male reproductive structures. It is possible that the known population may be a clone of a single or a few male individuals and that sexual reproduction is no longer possible for the species. Therefore, the South Llano springs moss has extremely low representation with one or just a few genetically identical individuals.

In addition to the habitat requirements described above,

sufficiently resilient populations of South Llano springs moss need to be large enough that local stochastic events do not eliminate all individuals, allowing the overall population to recover from any one event. The larger a population is, the greater the chances that a portion of the population will survive. The minimum viable population size is not known for this species. However, the geographic extent is provided from the observations of Wyatt and Stoneburner (1980, p. 516). When last observed, the South Llano springs moss grew in the spring outflow partially submerged in shaded areas within a 10–m (33–ft) zone between the springs and the river below (Wyatt and Stoneburner 1980, p. 516). We assume that the population could be as large as the spring flow and substrate allow in this zone. The area occupied by a moss population is a practical surrogate for abundance, provided that it is understood that this does not address the number of genetically unique individuals. Since the South Llano springs moss occupies only a small area at one location, this species has no redundancy and would be unable to recolonize following a catastrophic event.

Recruitment is also needed for populations to be adequately resilient. The colony at Seven Hundred Springs may be a clone of a single individual, or only male individuals, and is presumed incapable of sexual reproduction (Wyatt and Stoneburner 1980, p. 520). Unless female individuals are present, the colony of South Llano springs moss at Seven Hundred Springs can persist and grow only through vegetative budding or through the establishment of fragments that happen to lodge in suitable niches. These mats can expand to occupy new habitats while the portion that established earlier dies. An individual remains alive as long as old stems die no faster than new stems develop. The same individual could migrate back and forth through available habitats for an unlimited period of time, and it is not inconceivable that the individuals we see today arose from spores that germinated many thousands of years ago. For the species to persist, the recruitment of new individuals must equal or exceed mortality.

The species' range may have been more extensive 10,000 years ago, and subsequently became restricted to this single location as the climate warmed and other springs periodically stopped flowing (Wyatt and Stoneburner 1980, pp. 519–520). To assess the climate changes that could affect this species into the future, we examined the climate parameters using both the representative concentration pathway (RCP) 4.5 and RCP 8.5 scenarios to provide a range of projected values. These models predict that by 2074, climate changes could result in a reduction of aquifer recharge and an increased duration and severity of droughts and heavy rainfall, thereby increasing the threats of interrupted spring flows and flash floods. Annual precipitation is highly variable in central Texas, and severe, multi-year droughts occurred during the 1950s and from 2006 through 2012. During these historical periods of drought, only the largest springs along the South Llano River, including Seven Hundred Springs, continued flowing, but at lower rates. Prolonged drought in combination with increased pumping from the Edwards-Trinity aquifer could increase the probability of interrupted flows of these springs and, consequently, the extirpation or extinction of the South Llano springs moss. Despite the frequency of prolonged drought, the region is also subject to extremely heavy rainfall, often resulting from tropical storms in the Gulf of Mexico as well as the Pacific Ocean. All of these factors contribute to flash floods (high intensity, low duration floods) that can drastically change stream beds and the surrounding vegetation, potentially scouring the South Llano springs moss from its rock substrate along the edge of the stream, or burying it beneath deposits of silt, sand, and gravel.

The amount of pumping from the Edwards-Trinity aquifer is one of the most important factors influencing storage in the aquifer and spring flows. Aquifer water levels are stable or have declined slightly over most of the Edwards-Trinity aquifer, but in some areas, heavy pumping has led to long-term declines in aquifer levels and diminished or interrupted spring flows (George et al. 2011, p. 35; Region F Water Planning Group 2015, pp. 1–34, 3–15; Plateau Region Water Planning Group 2016, pp. 7–11). These sources project relatively little growth in the human population in Edwards and Kimble Counties during the next 50 years. Conversely, population growth is projected to increase for five central Texas counties, which include the metropolitan areas of San Antonio, New Braunfels, San Marcos, Austin, Round Rock, and Georgetown, by 32 percent between 2017 and 2037, and by 53 percent between 2017 and 2050 (Texas Demographic Center 2017, p. 1). It is reasonably foreseeable that increased pumping may occur from the Edwards-Trinity aquifer for transfer to other regions to supply increased municipal water demands. This increased pumping could reduce water storage in the Edwards-Trinity aquifer and spring flows in the South Llano River. Loss of spring flows, even for a short time, would likely reduce or extirpate the only known remaining population of the South Llano springs moss because the species requires constant immersion in flowing spring water to persist.

The Upper Llano River Watershed Protection Plan (Broad et al. 2016, pp. 51, 64–66, 86) identifies increased runoff, evapotranspiration, and sediment loading as impacts to the upper Llano River watersheds due to the encroachment of woody species. Recharge into the Edwards-Trinity aquifer in Edwards County has been reduced during prior periods of vegetation loss from overgrazing, resulting in increased runoff and the drying of some smaller springs (Brune 1981, p. 173). Aquifer recharge may also have been reduced by the encroachment of brush into formerly grass-dominated uplands (South Llano Watershed Alliance 2012, p. 9; Broad et al. 2016, pp. 40–41, 51). Aquifer recharge would also be reduced by an increase in evapotranspiration, due to increased temperatures.

Small populations are less able to recover from losses caused by random fluctuations in recruitment (demographic stochasticity) or variations in spring outflow (environmental stochasticity) (Service 2015, p. 12). In addition to population size, it is likely that population density also influences population viability, as sexual reproduction, if it occurs at all in the species' current situation, requires male and female mosses to be in close proximity. Small, reproductively isolated populations are also susceptible to the loss of genetic diversity, to genetic drift, and to inbreeding (Barrett and Kohn 1991, pp. 3–30). The loss of genetic diversity may reduce the ability of a species or population to resist pathogens and parasites, to adapt to changing environmental conditions, or to colonize new habitats. The combined demographic and genetic consequences of small population sizes may reduce population recruitment, leading to even smaller populations and greater isolation, and further decreasing the viability of the species. These factors may already have contributed to the decline of the South Llano springs moss to its current state of extreme endemism in the upper South Llano River. All of the above stressors are exacerbated by the fact that the South Llano springs moss likely consists of only one small population. This species has an extremely low level of representation,

no redundancy, and limited resiliency making it vulnerable to catastrophic events such as flash floods and droughts.

We note that, by using the SSA framework to guide our analysis of the scientific information documented in the SSA report, we have not only analyzed individual effects on the species, but we have also analyzed their potential cumulative effects. We have considered the cumulative effects from climate change, aquifer recharge, population growth, and groundwater pumping on the spring flows on which the South Llano springs moss is dependent. We have also considered the risk of prolonged drought and increased flash floods due to climate change. We incorporate the cumulative effects into our SSA analysis when we characterize the current and future condition of the species. To assess the current and future condition of the species, we undertake an iterative analysis that encompasses and incorporates the threats individually and then accumulates and evaluates the effects of all the factors that may be influencing the species, including threats and conservation efforts. Because the SSA framework considers not just the presence of the factors, but to what degree they collectively influence risk to the entire species, our assessment integrates the cumulative effects of the factors and replaces a standalone cumulative effects analysis.

Conservation Efforts and Regulatory Mechanisms

We are not aware of any projects specifically dedicated to the conservation of the South Llano springs moss. However, all efforts to improve rangeland and vegetation management within the Edwards-Trinity Aquifer recharge zone, and within the upper South Llano River watershed, and all efforts to manage and conserve the Edwards-Trinity Aquifer itself, contribute to the uninterrupted flow of spring water and protection of this species' habitat. The Partners for Fish and Wildlife program has assisted several local landowners with conducting upland habitat restoration and management. The landowner of the Seven Hundred Springs property has worked with the Partners for Fish and Wildlife Program to conduct prescribed burning and restore 1,600 acres of upland native grassland habitat for migratory monarch butterflies.

Regulatory Mechanisms

The continued existence of the South Llano springs moss requires the uninterrupted flow of groundwater from the Edwards-Trinity Aquifer at Seven Hundred Springs. In Texas, the use of groundwater is managed through the overlapping authorities of Regional Water Planning groups and Groundwater Management Areas established by the Texas Water Development Board and by Groundwater Conservation Districts established by either the Texas Legislature or the Texas Commission on Environmental Quality. The hydrologic basin that supplies the springs of the South Llano River lies within Regional Water Planning regions F (32 counties, including Kimble) and J Plateau (6 counties, including Edwards). The Hydrologic Unit Code (HUC)-12 watersheds (sub-watersheds) of the upper South Llano River occur in four Groundwater Conservation Districts: Real-Edwards Conservation and Reclamation District, Kimble County Groundwater Conservation District, Sutton County Underground Water Conservation District, and Headwaters Underground Water Conservation District. These districts lie within Groundwater Management Area 7, which has established a desired future condition limiting average drawdown of the Edwards-Trinity aquifer to 2.1 m (7 ft). Therefore, if this limit on aquifer drawdown is not exceeded, we do not expect any interruptions to the flow of water at Seven Hundred Springs.

Summary of Comments and Recommendations

In the proposed rule published on September 28, 2021 (86 FR 53609), we requested that all interested parties submit written comments on the proposal by November 29, 2021. We also contacted appropriate Federal and State agencies, scientific experts and organizations, and other interested parties and invited them to comment on the proposal. A newspaper notice inviting general public comment was published in the Junction Eagle. We did not receive any requests for a public hearing. All substantive information received during comment periods has either been incorporated directly into this final determination or is addressed below.

Peer Reviewer Comments

As discussed in Supporting Documents, above, we received comments from one peer reviewer. We reviewed the comments we received from the peer reviewer for substantive issues and new information regarding the information contained in the SSA report (version 1.1; Service 2023, entire). The peer reviewer generally concurred with our methods and conclusions and did not provide any additional information or substantive comments.

Comments From States

(1) Comment: We received a comment from the State of Texas stating that the Service lacks sufficient data on status, trends, and threats to warrant listing the South Llano springs moss as an endangered species or to designate critical habitat.

Our Response: We are required to make listing determinations based on the best scientific and commercial data available at the time of our rulemaking. In our September 28, 2021, proposed rule (86 FR 53609) and in this final rule, we considered the best scientific and commercial data available regarding the South Llano springs moss to evaluate the species' potential status under the Act. Even though the species was last confirmed to be present in 1979, the best available information indicates the species is extant because the habitat remains intact and there has been no interruption to spring flow since that time. In our SSA, we document ongoing threats to the only known location of the species. We solicited peer review of our evaluation of the available data, and the peer reviewer who responded supports our analysis. In making a listing decision, we are not required to document a decline in species abundance, but rather document threats to the species and the risks these threats pose to the survival of the species. To date, we have been unable to access this location to conduct surveys, but we would welcome the opportunity to do so. Science is a cumulative process, and the body of knowledge is ever-growing. In light of this, we will always take new research into consideration.

Based on the best scientific and commercial data available, in this rule, we list the South Llano springs moss as an endangered species under the Act. We are excluding the single proposed critical habitat unit for the species (for more information, see our exclusion analysis under *Exclusions Based on Other Relevant Impacts,* below).

Public Comments

(2) Comment: One commenter stated that the listing of the South Llano springs moss would affect the ability of the landowner to use their private property and would require the landowner to bear costs associated with the protection of the species.

Our Response: When a plant species is listed, owners of private property where the species occurs are not obligated to incur any costs related to the species' conservation or alter current

land management. The presence of a listed species on privately owned property does not affect land ownership, establish any restrictions on use of or access to the designated areas, or establish specific land management standards or prescriptions. Additionally, the presence of a listed species does not allow the government or public to access private lands.

The Act's section 9 prohibitions apply to the import and export, removal and reduction to possession, interstate or foreign commerce, and sale or offer for sale in interstate or foreign commerce of endangered plants. The prohibition on removal and reduction to possession of endangered plants applies to removing and reducing to possession, and maliciously damaging or destroying, the species on areas under Federal jurisdiction, not on private lands. That prohibition also applies to removing, cutting, digging up, or damaging or destroying the species on any other area in knowing violation of any State (in this case, Texas) law or regulation or in the course of any violation of a State criminal trespass law.

Section 7 of the Act does require Federal agencies to review the projects they fund, regulate, or carry out, such as federally funded highways and federally regulated pipelines and powerlines, to assess their effects on listed plants that occur on private lands. Through consultation with the Service, such projects may be modified to avoid or reduce effects to listed plants. Programs are available to aid interested landowners in the voluntary conservation of listed species. These programs may provide technical or financial assistance and may be requested from a local Service field office.

(3) Comment: One commenter stated that the Service lacks the authority to regulate intrastate species.

Our Response: We have the legal authority to regulate intrastate species. Numerous Federal appellate courts have held that regulation of purely intrastate species is an essential part of the Act's regulatory scheme. See *San Luis & Delta-Mendota Water Authority* v. *Salazar,* 638 F.3d 1163 (9th Cir. 2011); *Alabama-Tombigbee Rivers Coalition* v. *Kempthorne,* 477 F.3d 1250 (11th Cir. 2007); *GDF Realty Investments, LTD.* v. *Norton,* 326 F.3d 622 (5th Cir. 2003); *Gibbs* v. *Babbitt,* 214 F.3d 483 (4th Cir 2000); and *Nat'l Ass'n of Home Builders* v. *Babbitt,* 130 F.3d 1041 (D.C.Cir. 1997). In particular, the Fifth Circuit Court of Appeals (the Fifth Circuit includes Texas) has held that regulation of purely intrastate species ''is an essential part of'' the Act's larger regulatory scheme (*GDF Realty,* 326 F.3d at 640).

(4) Comment: One commenter stated that the proposed rule would designate much of the Edwards Aquifer as critical habitat.

Our Response: We proposed a critical habitat designation only in the immediate vicinity of Seven Hundred Springs, an area of 0.48 ac (0.19 ha). We have determined that the benefits of excluding this single unit of critical habitat outweigh the benefits of including it, so we are excluding this single 0.48-ac area from critical habitat designation (for more information, see our exclusion analysis under *Exclusions Based on Other Relevant Impacts,* below). As a result, no critical habitat is being designated for the South Llano springs moss in this rule.

(5) Comment: Two commenters expressed concerns that the listing of the South Llano springs moss would stop or reduce groundwater pumping from the Edwards aquifer.

Our Response: Nothing in this rule requires a reduction or stoppage of groundwater pumping from the Edwards aquifer. See our response to *(2) Comment,* above. As we state there, section 7 of the Act requires Federal agencies to review the projects they fund, regulate, or carry out, such as federally funded highways and federally regulated pipelines and powerlines, to assess their effects on listed plants. Although increased pumping from the Edwards-Trinity aquifer could potentially pose a threat to the species' survival, especially if combined with prolonged drought, pumping from this aquifer is not regulated by the Federal Government and is unlikely to have a Federal nexus.

(6) Comment: One commenter stated that the economic and societal costs from listing the South Llano springs moss outweigh the extinction of this species.

Our Response: Although we may consider economic impacts from a critical habitat designation, the decision on whether or not to list a species under the Act must rely solely on the best available scientific and commercial data (see 16 U.S.C. 1533(b)(1)(A)), without consideration of economic or societal costs.

(7) Comment: One comment stated that the proposed rule did not provide adequate alternatives through a National Environmental Policy Act (NEPA; 42 U.S.C. 4321 *et seq.*) analysis.

Our Response: It is our position that, outside the jurisdiction of the U.S. Court of Appeals for the Tenth Circuit, we do not need to prepare environmental analyses pursuant to NEPA in connection with regulations adopted pursuant to section 4(a) of the Act. We published a notice outlining our reasons for this determination in the **Federal Register** on October 25, 1983 (48 FR 49244). This position was upheld by the U.S. Court of Appeals for the Ninth Circuit (*Douglas County* v. *Babbitt,* 48 F.3d 1495 (9th Cir. 1995), cert. denied 516 U.S. 1042 (1996)).

(8) Comment: One commenter stated that the Service should specify conservation measures for the species.

Our Response: The Act does not require this rule to specify conservation measures for the species. When we list a species as endangered or threatened under the Act, we first propose it as such, then we evaluate new information received through the public comment process, then we make a final determination through a final rule. For the South Llano springs moss, we have determined the species is in danger of extinction. During the rulemaking process, we developed a recovery outline that will be used as the foundation of a recovery plan following listing. The recovery outline will be posted to our Environmental Conservation Online System (ECOS) website (*https://ecos.fws.gov/ecp/*) within 30 days after this final listing rule is published. The recovery outline presents a preliminary conservation strategy that will guide recovery actions until the full recovery plan is available. We then prepare a draft recovery plan, with the goal of completing it within 18 months of the publication of the final listing rule. We will post the draft recovery plan to ECOS when it is ready and provide a 60-day public review and comment period. The draft recovery plan will contain site-specific management actions needed for recovery, objective and measurable recovery criteria, and estimates of time and cost needed for recovery. Based on public and peer review comments, we will then prepare a final recovery plan, with a goal of completing it within 1 year after completing the draft recovery plan. We will also prepare a recovery implementation strategy, which will contain step-down activities or projects needed to implement the recovery actions described in the recovery plan.

(9) Comment: One commenter recommended that we designate additional unoccupied critical habitat downstream from Seven Hundred Springs.

Our Response: We have the ability to designate areas that are not occupied by the species (*i.e.,* unoccupied areas) as critical habitat if they possess one or more of the physical and biological features that are essential for the

conservation of the species. While we find that the species needs additional populations in more locations in order to recover to the point of no longer needing the protections of the Act, we do not possess sufficient data to demonstrate that any other areas exist that possess habitat essential for the conservation of South Llano springs moss.

Determination of South Llano Springs Moss's Status

Section 4 of the Act (16 U.S.C. 1533) and its implementing regulations (50 CFR part 424) set forth the procedures for determining whether a species meets the definition of an endangered species or a threatened species. The Act defines an ''endangered species'' as a species in danger of extinction throughout all or a significant portion of its range, and a ''threatened species'' as a species likely to become an endangered species within the foreseeable future throughout all or a significant portion of its range. The Act requires that we determine whether a species meets the definition of endangered species or threatened species because of any of the following factors: (A) The present or threatened destruction, modification, or curtailment of its habitat or range; (B) overutilization for commercial, recreational, scientific, or educational purposes; (C) disease or predation; (D) the inadequacy of existing regulatory mechanisms; or (E) other natural or manmade factors affecting its continued existence.

Status Throughout All of Its Range

After evaluating threats to the species and assessing the cumulative effect of the threats under the Act's section 4(a)(1) factors, we are listing the South Llano springs moss as an endangered species throughout all of its range. Only two very small populations of South Llano springs moss have been documented, which were last observed in 1971 and 1979. One is now extirpated, and the other is restricted to a 10-by-100-m (33-by-328-ft) zone between Seven Hundred Springs and the South Llano River (Wyatt and Stoneburner 1980, p. 516). Therefore, the species has an extremely low level of representation, and no redundancy, making it vulnerable to catastrophic events such as flash floods and droughts. During historical droughts, such as in the 1950s and 2006–2012, many regional springs ceased flowing, and the flow of Seven Hundred Springs was greatly reduced. Projected climate changes include an increased frequency, duration, and severity of droughts (Factor E), thereby increasing the risk of interrupting the flow of Seven Hundred Springs and the desiccation and mortality of this obligately aquatic moss (Factor A). The amount of pumping from the Edwards-Trinity aquifer is one of the most important factors influencing storage in the aquifer and the spring flows on which the South Llano springs moss relies. Groundwater pumping is likely to increase as the human population grows and as the severity and duration of droughts increases. Prolonged drought (Factor E), in combination with increased pumping from the Edwards-Trinity aquifer (Factor E), further increase the probability of interrupting the flow of Seven Hundred Springs (Factor A) and, consequently, the probability of extinction of the South Llano springs moss.

The South Llano springs moss has little or no genetic diversity (Factor E) because this species likely consists of clones of one or a few male individuals and is no longer capable of sexual reproduction (Factor E). Consequently, the species has very low representation and likely has very little ability to adapt to environmental changes. In addition, the South Llano springs moss has poor redundancy because there is only one small population remaining. One future drought event that reduces the flow of Seven Hundred Springs could result in the extirpation of this species.

We find that the South Llano springs moss is presently in danger of extinction throughout its entire range based on the one small population that is likely genetically compromised. This status puts the species on the brink of extinction where normal stochastic events, such as drought, flooding, or a human-caused drop in the aquifer level, could lead to further decline or loss of the species entirely. The only other known population has not been observed since 1971 and is considered likely extirpated. This one remaining population could be affected by a variety of threats acting in combination to reduce the overall viability of the species. The risk of extinction is high because the remaining population is small, with no known potential for natural recolonization. We find that a threatened species status is not appropriate for the South Llano springs moss because of the species' current precarious condition due to its contracted range, small population size, and likely compromised genetics, and because these stressors are severe, ongoing, and expected to continue into the future.

Therefore, after assessing the best available information, we determine that the South Llano springs moss is in danger of extinction throughout all of its range.

Status Throughout a Significant Portion of Its Range

Under the Act and our implementing regulations, a species may warrant listing if it is in danger of extinction or likely to become so in the foreseeable future throughout all or a significant portion of its range. We have determined that the South Llano springs moss is in danger of extinction throughout all of its range and accordingly did not undertake an analysis of any significant portions of its range. Because the South Llano springs moss warrants listing as endangered throughout all of its range, our determination does not conflict with the decision in *Center for Biological Diversity* v. *Everson,* 435 F. Supp. 3d 69 (D.D.C. 2020), because that decision related to significant portion of the range analyses for species that warrant listing as threatened, not endangered, throughout all of their range.

Determination of Status

Our review of the best available scientific and commercial information indicates that the South Llano springs moss meets the Act's definition of an endangered species. Therefore, we are listing the South Llano springs moss as an endangered species in accordance with sections 3(6) and 4(a)(1) of the Act.

Available Conservation Measures

Conservation measures provided to species listed as endangered or threatened species under the Act include recognition as a listed species, planning and implementation of recovery actions, requirements for Federal protection, and prohibitions against certain practices. Recognition through listing results in public awareness, and conservation by Federal, State, Tribal, and local agencies, private organizations, and individuals. The Act encourages cooperation with the States and other countries and calls for recovery actions to be carried out for listed species. The protection required by Federal agencies, including the Service, and the prohibitions against certain activities are discussed, in part, below.

The primary purpose of the Act is the conservation of endangered and threatened species and the ecosystems upon which they depend. The ultimate goal of such conservation efforts is the recovery of these listed species, so that they no longer need the protective measures of the Act. Section 4(f) of the Act calls for the Service to develop and implement recovery plans for the

conservation of endangered and threatened species. The goal of this process is to restore listed species to a point where they are secure, self-sustaining, and functioning components of their ecosystems.

The recovery planning process begins with development of a recovery outline made available to the public soon after a final listing determination. The recovery outline guides the immediate implementation of urgent recovery actions while a recovery plan is being developed. Recovery teams (composed of species experts, Federal and State agencies, nongovernmental organizations, and stakeholders) may be established to develop and implement recovery plans. The recovery planning process involves the identification of actions that are necessary to halt and reverse the species' decline by addressing the threats to its survival and recovery. The recovery plan identifies recovery criteria for review of when a species may be ready for reclassification from endangered to threatened (''downlisting'') or removal from protected status (''delisting''), and methods for monitoring recovery progress. Recovery plans also establish a framework for agencies to coordinate their recovery efforts and provide estimates of the cost of implementing recovery tasks. Revisions of the plan may be done to address continuing or new threats to the species, as new substantive information becomes available. The recovery outline, draft recovery plan, final recovery plan, and any revisions will be available on ECOS as they are completed (*https://ecos.fws.gov/ecp/*), or from our Austin Ecological Services Field Office (see **FOR FURTHER INFORMATION CONTACT**).

Implementation of recovery actions generally requires the participation of a broad range of partners, including other Federal agencies, States, Tribes, nongovernmental organizations, businesses, and private landowners. Examples of recovery actions include habitat restoration (*e.g.,* restoration of native vegetation), research, captive propagation and reintroduction, and outreach and education. The recovery of many listed species cannot be accomplished solely on Federal lands because their range may occur primarily or solely on non-Federal lands. To achieve recovery of these species requires cooperative conservation efforts on private, State, and Tribal lands.

Once this species is listed (see **DATES**, above), funding for recovery actions may be available from a variety of sources, including Federal budgets, State programs, and cost-share grants for non-Federal landowners, the academic community, and nongovernmental organizations. In addition, pursuant to section 6 of the Act, the State of Texas will be eligible for Federal funds to implement management actions that promote the protection or recovery of the South Llano springs moss. Information on our grant programs that are available to aid species recovery can be found at: *https://www.fws.gov/service/financial-assistance.*

Please let us know if you are interested in participating in recovery efforts for the South Llano springs moss. Additionally, we invite you to submit any new information on this species whenever it becomes available and any information you may have for recovery planning purposes (see **FOR FURTHER INFORMATION CONTACT**).

Section 7(a) of the Act requires Federal agencies to evaluate their actions with respect to any species that is listed as an endangered or threatened species and with respect to its critical habitat, if any is designated. Regulations implementing this interagency cooperation provision of the Act are codified at 50 CFR part 402. Section 7(a)(2) of the Act requires Federal agencies to ensure that activities they authorize, fund, or carry out are not likely to jeopardize the continued existence of any endangered or threatened species or destroy or adversely modify its critical habitat. If a Federal action may affect a listed species or its critical habitat, the responsible Federal agency must enter into consultation with us.

Federal agency actions within the species' habitat that may require conference, consultation, or both as described in the preceding paragraph include management and conservation projects conducted on private lands with support from the Service's Partners for Fish and Wildlife Program; issuance of section 404 Clean Water Act (33 U.S.C. 1251 *et seq.*) permits by the U.S. Army Corps of Engineers; construction and maintenance of roads or highways by the Federal Highway Administration; construction and maintenance of railways by the Federal Railroad Administration; and discharge permits from the Environmental Protection Agency.

The Act and its implementing regulations set forth a series of general prohibitions and exceptions that apply to endangered plants. The prohibitions of section 9(a)(2) of the Act, codified at 50 CFR 17.61, make it illegal for any person subject to the jurisdiction of the United States to: Import or export; remove and reduce to possession from areas under Federal jurisdiction; maliciously damage or destroy on any such area; remove, cut, dig up, or damage or destroy on any other area in knowing violation of any law or regulation of any State or in the course of any violation of a State criminal trespass law; deliver, receive, carry, transport, or ship in interstate or foreign commerce, by any means whatsoever and in the course of a commercial activity; or sell or offer for sale in interstate or foreign commerce an endangered plant. Certain exceptions apply to employees of the Service, other Federal land management agencies, and State conservation agencies.

We may issue permits to carry out otherwise prohibited activities involving endangered plants under certain circumstances. Regulations governing permits are codified at 50 CFR 17.62. With regard to endangered plants, a permit may be issued for scientific purposes or for enhancing the propagation or survival of the species. The statute also contains certain exemptions from the prohibitions, which are found in sections 9 and 10 of the Act.

It is our policy, as published in the **Federal Register** on July 1, 1994 (59 FR 34272), to identify to the maximum extent practicable at the time a species is listed those activities that would or would not constitute a violation of section 9 of the Act. The intent of this policy is to increase public awareness of the effect of a final listing on proposed and ongoing activities within the range of a listed species. Based on the best available information, the following actions are unlikely to result in a violation of section 9, if these activities are carried out in accordance with existing regulations and permit requirements; this list is not comprehensive:

(1) Recreational use of the streams, such as fishing, swimming, and canoeing, as these activities normally take place in the river or on the river bank and not in the spring itself; and

(2) Normal residential landscaping activities, as these activities do not take place in the spring, nor do they affect the quantity or quality of water in the spring.

Based on the best available information, the following activities may potentially result in a violation of section 9 of the Act if they are not authorized in accordance with applicable law; this list is not comprehensive:

(1) Removing, cutting, digging up, or damaging or destroying the South Llano springs moss in knowing violation of any law or regulation of the State of Texas or in the course of any violation of a State criminal trespass law;

(2) Importing the South Llano springs moss into, or exporting it from, the United States;

(3) Delivering, receiving, carrying, transporting, or shipping the South Llano springs moss in interstate or foreign commerce, by any means and in the course of a commercial activity; and

(4) Selling or offering the South Llano springs moss for sale in interstate or foreign commerce.

Questions regarding whether specific activities would constitute a violation of section 9 of the Act should be directed to the Austin Ecological Services Field Office (see **FOR FURTHER INFORMATION CONTACT**).

II. Critical Habitat

Background

Section 4(a)(3) of the Act requires that, to the maximum extent prudent and determinable, we designate a species' critical habitat concurrently with listing the species. Critical habitat is defined in section 3 of the Act as:

(1) The specific areas within the geographical area occupied by the species, at the time it is listed in accordance with the Act, on which are found those physical or biological features

(a) Essential to the conservation of the species, and

(b) Which may require special management considerations or protection; and

(2) Specific areas outside the geographical area occupied by the species at the time it is listed, upon a determination that such areas are essential for the conservation of the species.

Our regulations at 50 CFR 424.02 define the geographical area occupied by the species as an area that may generally be delineated around species' occurrences, as determined by the Secretary (*i.e.,* range). Such areas may include those areas used throughout all or part of the species' life cycle, even if not used on a regular basis (*e.g.,* migratory corridors, seasonal habitats, and habitats used periodically, but not solely by vagrant individuals).

This critical habitat designation was proposed when the regulations defining ''habitat'' (85 FR 81411; December 16, 2020) and governing the 4(b)(2) exclusion process for the Service (85 FR 82376; December 18, 2020) were in place and in effect. However, those two regulations have been rescinded (87 FR 37757; June 24, 2022, and 87 FR 43433; July 21, 2022) and no longer apply to any designations of critical habitat. Therefore, for this final rule designating critical habitat for the South Llano springs moss, we apply the regulations at 424.19 and the 2016 Joint Policy on 4(b)(2) exclusions (81 FR 7226; February 11, 2016).

Conservation, as defined under section 3 of the Act, means to use and the use of all methods and procedures that are necessary to bring an endangered or threatened species to the point at which the measures provided pursuant to the Act are no longer necessary. Such methods and procedures include, but are not limited to, all activities associated with scientific resources management such as research, census, law enforcement, habitat acquisition and maintenance, propagation, live trapping, and transplantation, and, in the extraordinary case where population pressures within a given ecosystem cannot be otherwise relieved, may include regulated taking.

Critical habitat receives protection under section 7 of the Act through the requirement that Federal agencies ensure, in consultation with the Service, that any action they authorize, fund, or carry out is not likely to result in the destruction or adverse modification of critical habitat. The designation of critical habitat does not affect land ownership or establish a refuge, wilderness, reserve, preserve, or other conservation area. Such designation also does not allow the government or public to access private lands. Such designation does not require implementation of restoration, recovery, or enhancement measures by non-Federal landowners. Where a landowner requests Federal agency funding or authorization for an action that may affect a listed species or critical habitat, the Federal agency would be required to consult with the Service under section 7(a)(2) of the Act. However, even if the Service were to conclude that the proposed activity would result in destruction or adverse modification of the critical habitat, the Federal action agency and the landowner are not required to abandon the proposed activity, or to restore or recover the species; instead, they must implement ''reasonable and prudent alternatives'' to avoid destruction or adverse modification of critical habitat.

Under the first prong of the Act's definition of critical habitat, areas within the geographical area occupied by the species at the time it was listed are included in a critical habitat designation if they contain physical or biological features (1) which are essential to the conservation of the species and (2) which may require special management considerations or protection. For these areas, critical habitat designations identify, to the extent known using the best scientific and commercial data available, those physical or biological features that are essential to the conservation of the species (such as space, food, cover, and protected habitat).

Under the second prong of the Act's definition of critical habitat, we can designate critical habitat in areas outside the geographical area occupied by the species at the time it is listed, upon a determination that such areas are essential for the conservation of the species.

Section 4 of the Act requires that we designate critical habitat on the basis of the best scientific data available. Further, our Policy on Information Standards Under the Endangered Species Act (published in the **Federal Register** on July 1, 1994 (59 FR 34271)), the Information Quality Act (section 515 of the Treasury and General Government Appropriations Act for Fiscal Year 2001 (Pub. L. 106–554; H.R. 5658)), and our associated Information Quality Guidelines provide criteria, establish procedures, and provide guidance to ensure that our decisions are based on the best scientific data available. They require our biologists, to the extent consistent with the Act and with the use of the best scientific data available, to use primary and original sources of information as the basis for recommendations to designate critical habitat.

When we are determining which areas should be designated as critical habitat, our primary source of information is generally the information from the SSA report and information developed during the listing process for the species. Additional information sources may include any generalized conservation strategy, criteria, or outline that may have been developed for the species; the recovery plan for the species; articles in peer-reviewed journals; conservation plans developed by States and counties; scientific status surveys and studies; biological assessments; other unpublished materials; or experts' opinions or personal knowledge.

Habitat is dynamic, and species may move from one area to another over time. We recognize that critical habitat designated at a particular point in time may not include all of the habitat areas that we may later determine are necessary for the recovery of the species. For these reasons, a critical habitat designation does not signal that habitat outside the designated area is unimportant or may not be needed for recovery of the species. Areas that are important to the conservation of the

species, both inside and outside the critical habitat designation, will continue to be subject to: (1) Conservation actions implemented under section 7(a)(1) of the Act; (2) regulatory protections afforded by the requirement in section 7(a)(2) of the Act for Federal agencies to ensure their actions are not likely to jeopardize the continued existence of any endangered or threatened species; and (3) the prohibitions found in section 9 of the Act. Federally funded or permitted projects affecting listed species outside their designated critical habitat areas may still result in jeopardy findings in some cases. These protections and conservation tools will continue to contribute to recovery of this species. Similarly, critical habitat designations made on the basis of the best available information at the time of designation will not control the direction and substance of future recovery plans, habitat conservation plans (HCPs), or other species conservation planning efforts if new information available at the time of these planning efforts calls for a different outcome.

Physical or Biological Features Essential to the Conservation of the Species

In accordance with section 3(5)(A)(i) of the Act and regulations at 50 CFR 424.12(b), in determining which areas we will designate as critical habitat from within the geographical area occupied by the species at the time of listing, we consider the physical or biological features that are essential to the conservation of the species and which may require special management considerations or protection. The regulations at 50 CFR 424.02 define ''physical or biological features essential to the conservation of the species'' as the features that occur in specific areas and that are essential to support the life-history needs of the species, including, but not limited to, water characteristics, soil type, geological features, sites, prey, vegetation, symbiotic species, or other features. A feature may be a single habitat characteristic or a more complex combination of habitat characteristics. Features may include habitat characteristics that support ephemeral or dynamic habitat conditions. Features may also be expressed in terms relating to principles of conservation biology, such as patch size, distribution distances, and connectivity. For example, physical features essential to the conservation of the species might include gravel of a particular size required for spawning, alkaline soil for seed germination, protective cover for migration, or susceptibility to flooding or fire that maintains necessary early-successional habitat characteristics. Biological features might include prey species, forage grasses, specific kinds or ages of trees for roosting or nesting, symbiotic fungi, or absence of a particular level of nonnative species consistent with conservation needs of the listed species. The features may also be combinations of habitat characteristics and may encompass the relationship between characteristics or the necessary amount of a characteristic essential to support the life history of the species.

In considering whether features are essential to the conservation of the species, we may consider an appropriate quality, quantity, and spatial and temporal arrangement of habitat characteristics in the context of the life-history needs, condition, and status of the species. These characteristics include, but are not limited to, space for individual and population growth and for normal behavior; food, water, air, light, minerals, or other nutritional or physiological requirements; cover or shelter; sites for breeding, reproduction, or rearing (or development) of offspring; and habitats that are protected from disturbance.

Summary of Essential Physical or Biological Features

We derive the specific physical or biological features essential to the conservation of South Llano springs moss from studies of the species' habitat, ecology, and life history as described below. Additional information can be found in the SSA report (Service 2023, entire; available at *https://www.regulations.gov* under Docket No. FWS–R2–ES–2020–0015). We have determined that the following physical or biological features are essential to the conservation of South Llano springs moss:

(1) The uninterrupted flow of spring water supplied by the Edwards-Trinity aquifer within the South Llano watershed.

(2) Relatively constant water temperature due to proximity to the point of spring outflow.

(3) A substrate of calcareous or travertine rock not more than 15 centimeters (cm) (6 inches (in)) below the surface of the water.

(4) Contaminant and sediment levels that do not exceed the tolerance limits of South Llano springs moss and associated plant and animal species.

Special Management Considerations or Protection

When designating critical habitat, we assess whether the specific areas within the geographical area occupied by the species at the time of listing contain features which are essential to the conservation of the species and which may require special management considerations or protection.

The features essential to the conservation of this species may require special management considerations or protection to reduce the following stressors: reduction or loss of spring flow, erosion, and sedimentation. Management activities that could ameliorate these stressors include (but are not limited to): prescribed fire, brush management, and grazing management to increase infiltration into the Edwards-Trinity aquifer and reduce runoff and subsequent flooding.

Criteria Used To Identify Critical Habitat

As required by section 4(b)(2) of the Act, we use the best scientific data available to designate critical habitat. In accordance with the Act and our implementing regulations at 50 CFR 424.12(b), we review available information pertaining to the habitat requirements of the species and identify specific areas within the geographical area occupied by the species at the time of listing and any specific areas outside the geographical area occupied by the species to be considered for designation as critical habitat. We are not designating any areas outside the geographical area occupied by the species because we have not identified any unoccupied areas that meet the definition of critical habitat. While we acknowledge that the conservation of the species will depend on increasing the number of sites, we are not aware of any other area that has habitat suitable to support the species. Therefore, we are unable at this time to identify any specific unoccupied areas that are essential to the species' conservation. For an area to be considered essential unoccupied habitat, we must have reasonable certainty both that the area will contribute to the conservation of the species and that the area contains one or more of the physical or biological features essential to the conservation of the species. The exact location of the Redfearn site is unknown, and, although there are a number of other large springs emerging from the Edwards-Trinity aquifer, it is unknown if these sites would be biologically suitable for the species. In addition, there is uncertainty that the species could be transplanted successfully if suitable sites existed for reintroduction.

In summary, for areas within the geographic area occupied by the species at the time of listing, we delineated

critical habitat unit boundaries by evaluating the area of spring flow and submerged limestone within the geographic area occupied at the time of listing. We delineated one critical habitat unit that we determined to be occupied at the time of listing (*i.e.,* currently occupied) and that contains one or more of the physical or biological features that are essential to support life-history processes of the species.

As a result of our exclusion analysis (see *Exclusions Based on Other Relevant Impacts,* below), we are not designating critical habitat for this species.

Final Critical Habitat Designation

We are not designating critical habitat for South Llano springs moss (see *Exclusions Based on Other Relevant Impacts,* below).

Exemptions

Application of Section 4(a)(3) of the Act

Section 4(a)(3)(B)(i) of the Act (16 U.S.C. 1533(a)(3)(B)(i)) provides that the Secretary shall not designate as critical habitat any lands or other geographical areas owned or controlled by the Department of Defense (DoD), or designated for its use, that are subject to an integrated natural resources management plan (INRMP) prepared under section 101 of the Sikes Act Improvement Act of 1997 (16 U.S.C. 670a), if the Secretary determines in writing that such plan provides a benefit to the species for which critical habitat is proposed for designation. In preparing this final rule, we have determined that the lands within the unit proposed as critical habitat for South Llano springs moss are not owned or managed by the DoD.

Consideration of Impacts Under Section 4(b)(2) of the Act

Section 4(b)(2) of the Act states that the Secretary shall designate and make revisions to critical habitat on the basis of the best available scientific data after taking into consideration the economic impact, national security impact, and any other relevant impact of specifying any particular area as critical habitat. The Secretary may exclude an area from designated critical habitat based on economic impacts, impacts on national security, or any other relevant impacts. Exclusion decisions are governed by the regulations at 50 CFR 424.19 and the Policy Regarding Implementation of Section 4(b)(2) of the Endangered Species Act (hereafter, the ''2016 Policy''; 81 FR 7226, February 11, 2016), both of which were developed jointly with the National Marine Fisheries Service (NMFS). We also refer to a 2008 Department of the Interior Solicitor's opinion entitled, ''The Secretary's Authority to Exclude Areas from a Critical Habitat Designation under Section 4(b)(2) of the Endangered Species Act'' (M–37016). We explain each decision to exclude areas, as well as decisions not to exclude, to demonstrate that the decision is reasonable.

In considering whether to exclude a particular area from the designation, we identify the benefits of including the area in the designation, identify the benefits of excluding the area from the designation, and evaluate whether the benefits of exclusion outweigh the benefits of inclusion. If the analysis indicates that the benefits of exclusion outweigh the benefits of inclusion, the Secretary may exercise discretion to exclude the area only if such exclusion would not result in the extinction of the species. In making the determination to exclude a particular area, the statute on its face, as well as the legislative history, are clear that the Secretary has broad discretion regarding which factor(s) to use and how much weight to give to any factor. We describe below the process that we undertook for taking into consideration each category of impacts and our analyses of the relevant impacts.

Exclusions Based on Economic Impacts

Section 4(b)(2) of the Act and its implementing regulations require that we consider the economic impact that may result from a designation of critical habitat. In order to consider economic impacts, we prepared an incremental effects memorandum (IEM) and screening analysis which, together with our narrative and interpretation of effects, we consider our economic analysis of the critical habitat designation and related factors (IEc 2019, entire). The analysis, dated December 20, 2019, was made available for public review from September 28, 2021, through November 29, 2021 (see 86 FR 53609). The economic analysis addressed probable economic impacts of critical habitat designation for South Llano springs moss. Following the close of the comment period, we reviewed and evaluated all information submitted during the comment period that may pertain to our consideration of the probable incremental economic impacts of this critical habitat designation. Additional information relevant to the probable incremental economic impacts of critical habitat designation for the South Llano springs moss is summarized below and available in the screening analysis for the South Llano springs moss (IEc 2019, entire), available at *https://www.regulations.gov.*

The screening analysis found that the critical habitat designation for the South Llano springs moss would be likely to result in annual incremental costs of approximately $8,100 per year above those incurred due to the species listing alone. These costs would occur as a result of additional administrative efforts to consider adverse modification of critical habitat during section 7 consultations. The designation of critical habitat is not expected to trigger additional requirements under State or local regulations, nor is the designation expected to have perceptional effects on markets.

We considered the economic impacts of the critical habitat designation. The Secretary is not exercising her discretion to exclude any areas from this designation of critical habitat for the South Llano springs moss based on economic impacts.

Exclusions Based on Impacts on National Security and Homeland Security

In preparing this rule, we have determined that the lands within the proposed designation of critical habitat for South Llano springs moss are not owned or managed by the DoD or Department of Homeland Security (DHS), and, therefore, we anticipate no impact on national security or homeland security. We also received no requests for exclusion from DoD or DHS. We did not receive any additional information during the public comment period for the proposed designation regarding impacts of the designation on national security or homeland security that would support excluding any specific areas from the final critical habitat designation under authority of section 4(b)(2) and our implementing regulations at 50 CFR 424.19. Based on this information, the Secretary has determined not to exercise her discretion to exclude any areas from this designation of critical habitat based on impacts on national security or homeland security.

Exclusions Based on Other Relevant Impacts

Under section 4(b)(2) of the Act, we consider any other relevant impacts, in addition to economic impacts and impacts on national security discussed above. We consider a number of factors, including whether there are permitted conservation plans covering the species in the area—such as HCPs, safe harbor agreements (SHAs), or candidate conservation agreements with assurances (CCAAs)—or whether there

are non-permitted conservation agreements and partnerships that would be encouraged by designation of, or exclusion from, critical habitat. In addition, we look at the existence of Tribal conservation plans and partnerships and consider the government-to-government relationship of the United States with Tribal entities. We also consider any social impacts that might occur because of the designation.

When identifying the benefits of inclusion for an area, we consider the additional regulatory benefits that the area would receive due to the protection from destruction or adverse modification as a result of actions with a Federal nexus, the educational benefits of mapping essential habitat for recovery of the listed species, and any benefits that may result from a designation due to State or Federal laws that may apply to critical habitat.

In the case of the South Llano springs moss, the benefits of critical habitat include public awareness of the presence of the species and the importance of habitat protection, and, where a Federal nexus exists, increased habitat protection for the South Llano springs moss due to protection from destruction or adverse modification of critical habitat.

When identifying the benefits of exclusion, we consider, among other things, whether exclusion of a specific area is likely to result in conservation, or in the continuation, strengthening, or encouragement of partnerships. Additionally, continued implementation of an ongoing management plan that provides equal to or more conservation than a critical habitat designation would reduce the benefits of including that specific area in the critical habitat designation.

We evaluate the existence of a conservation plan when considering the benefits of inclusion. We consider a variety of factors, including, but not limited to, whether the plan is finalized; how it provides for the conservation of the essential physical or biological features; whether there is a reasonable expectation that the conservation management strategies and actions contained in a management plan will be implemented into the future; whether the conservation strategies in the plan are likely to be effective; and whether the plan contains a monitoring program or adaptive management to ensure that the conservation measures are effective and can be adapted in the future in response to new information.

After identifying the benefits of inclusion and the benefits of exclusion, we carefully weigh the two sides to evaluate whether the benefits of exclusion outweigh those of inclusion. If our analysis indicates that the benefits of exclusion outweigh the benefits of inclusion, we then determine whether exclusion would result in extinction of the species. If exclusion of an area from critical habitat will result in extinction, we will not exclude it from the designation.

Based on the public comments we received, and the best scientific data available, we evaluated whether lands in the critical habitat unit identified in the proposed rule were appropriate for exclusion from the final designation under section 4(b)(2) of the Act. If the analysis indicates that the benefits of excluding lands from the final designation outweigh the benefits of designating those lands as critical habitat, then the Secretary may exercise her discretion to exclude the lands from the final designation. In the paragraphs below, we provide a detailed balancing analysis of the critical habitat being excluded under section 4(b)(2) of the Act.

Non-Permitted Conservation Plans, Agreements, or Partnerships

We sometimes exclude specific areas from critical habitat designations based in part on the existence of private or other non-Federal conservation plans or agreements and their attendant partnerships. A conservation plan or agreement describes actions that are designed to provide for the conservation needs of a species and its habitat, and may include actions to reduce or mitigate negative effects on the species caused by activities on or adjacent to the area covered by the plan. Conservation plans or agreements can be developed by private entities with no Service involvement, or in partnership with the Service, sometimes through the permitting process under Section 10 of the Act.

When we undertake a discretionary section 4(b)(2) analysis, we evaluate a variety of factors to determine how the benefits of any exclusion and the benefits of inclusion are affected by the existence of private or other non-Federal conservation plans or agreements and their attendant partnerships. Shown below is a non-exhaustive list of factors that we consider in evaluating how non-permitted plans or agreements affect the benefits of inclusion or exclusion. These are not required elements of plans or agreements. Rather, they are some of the factors we may consider, and not all of these factors apply to every plan or agreement.

(i) The degree to which the record of the plan, or information provided by proponents of an exclusion, supports a conclusion that a critical habitat designation would impair the realization of the benefits expected from the plan, agreement, or partnership.

(ii) The extent of public participation in the development of the conservation plan.

(iii) The degree to which agency review and required determinations (*e.g.,* State regulatory requirements) have been completed, as necessary and appropriate.

(iv) Whether NEPA reviews or similar reviews occurred, and the nature of any such reviews.

(v) The demonstrated implementation and success of the chosen mechanism.

(vi) The degree to which the plan or agreement provides for the conservation of the physical or biological features that are essential to the conservation of the species.

(vii) Whether there is a reasonable expectation that the conservation management strategies and actions contained in a management plan or agreement will be implemented.

(viii) Whether the plan or agreement contains a monitoring program and adaptive management to ensure that the conservation measures are effective and can be modified in the future in response to new information.

Upper South Llano River Unit (also known as Seven Hundred Springs)—We proposed to designate critical habitat identified as the ''Upper South Llano River Unit'' (0.48 ac (0.19 ha)) on privately owned lands where the South Llano springs moss occurs.

Our Partners for Fish and Wildlife Program has a history of working with the private landowner on whose property Seven Hundred Springs occurs and where critical habitat was proposed. Since 2013, we have completed five habitat improvement projects in partnership with the private landowner. These projects included prescribed burning on over 1,000 ac plus mechanical restoration on 1,126 ac of upland native grassland habitat that benefit the South Llano springs moss by reducing runoff, flash flooding, and soil erosion, and increasing infiltration of rainwater into the aquifer that supplies Seven Hundred Springs. These benefits to the springs help ensure the physical and biological features necessary for the persistence of the species, including uninterrupted flow of spring water and sediment levels that do not exceed the tolerance limits of the South Llano springs moss.

Benefits of Inclusion

The benefits of including lands in critical habitat can be regulatory, can be educational, or can aid in recovery of

species as generally discussed above. We expect only minimal regulatory benefits from the designation of critical habitat for the South Llano springs moss. Section 7(a)(2) of the Act requires Federal agencies, including the Service, to ensure that any action they fund, authorize, or carry out is not likely to jeopardize the continued existence of any endangered species or threatened species or result in the destruction or adverse modification of designated critical habitat of such species. The difference in the outcomes of the jeopardy analysis and the adverse modification analysis represents the regulatory benefits and costs of critical habitat. A critical habitat designation requires Federal agencies to consult on whether their activity would destroy or adversely modify critical habitat to the point where recovery could not be achieved. However, all proposed critical habitat is occupied by the species, and thus would require section 7 consultation for any project with a Federal nexus that may affect the South Llano springs moss. Any project that would destroy or adversely modify critical habitat would also jeopardize the continued existence of the species, since the species is entirely dependent upon Seven Hundred Springs for its survival. Additionally, as the proposed critical habitat is located entirely on private property, we foresee very few section 7 consultations due to a lack of a Federal nexus. Any additional projects conducted by the Partners for Fish and Wildlife Program would be covered by a section 7 consultation. The rarity of section 7 consultations results in very limited regulatory benefits for the designation of critical habitat in the proposed Upper South Llano River Unit. Given the anticipated rarity of section 7 consultation, the dependence on private conservation actions is more important.

Another important benefit of including lands in a critical habitat designation is that it can serve to educate landowners, agencies, Tribes, and the public regarding the potential conservation value of an area, and this may focus and contribute to conservation efforts by other parties by clearly delineating areas of high conservation value for certain species. Any information about the South Llano springs moss and its habitat that reaches a wide audience, including other parties engaged in conservation activities, would be considered valuable. We expect the educational benefits to be especially limited in the proposed Upper South Llano River Unit, because it occurs entirely on private lands that are not open to the public. With limited regulatory and educational benefits likely as a result of designating critical habitat, we foresee no other tangible benefits to further recovery of the species, and so the benefits of inclusion are outweighed by the benefits of exclusion as further explained below.

Benefits of Exclusion

The only known population of the South Llano springs moss is fully within private ownership, and, therefore, Federal agencies have no jurisdiction to manage its habitat. As a result, partnerships with and among private individuals, like the landowner of the proposed Upper South Llano River Unit, are the key to conserving the species through habitat conservation projects such as the Partners for Fish and Wildlife projects that have been completed near Seven Hundred Springs. Therefore, we find it is important to consider the potential benefits that will be realized by fostering positive relationships with the landowner if we exclude the area from critical habitat designation.

Excluding the entirety of the proposed critical habitat, known as the Upper South Llano River Unit, would provide benefits through the continuance and strengthening of our effective cooperative relationship with the landowner to promote the conservation of the South Llano springs moss and its habitat. Since the South Llano springs moss occurs only in the privately owned Upper South Llano River Unit, continued conservation and recovery of this species is entirely dependent upon cooperation and coordination with the landowner. This landowner has worked with our Partners for Fish and Wildlife program in the past, and the aforementioned five habitat improvement projects accomplished in partnership with the private landowner since 2013 have benefited the South Llano springs moss and its habitat. The designation of critical habitat is anticipated to harm the previously cooperative working relationship that we have established with the landowner. We anticipate that continuing our cooperative relationship with the landowner will allow voluntary conservation work to continue, which will benefit the South Llano springs moss and its recovery.

The South Llano springs moss and its habitat are expected to benefit substantially from voluntary landowner management actions that implement appropriate and effective conservation strategies. Where consistent with the discretion provided by the Act, it is beneficial to implement policies that provide positive incentives to private landowners to voluntarily conserve natural resources and that remove or reduce disincentives to conservation (Wilcove et al. 1998, entire; Bean 2002, pp. 1–7). Thus, it is important for the South Llano springs moss's recovery to build on continued conservation activities such as these with a proven partner, and to provide positive incentives to the private landowner to implement voluntary conservation activities. These conservation actions help ensure the uninterrupted flow of spring water and sediment levels that do not exceed the tolerance limits of the South Llano springs moss, aiding the recovery of the species.

The benefits of excluding this area from critical habitat will encourage the continued conservation, land management, and coordination between the landowner and the Service. Excluding the proposed Upper South Llano River Unit from critical habitat helps ensure the future conservation, research, and information sharing for the recovery of the South Llano springs moss.

Benefits of Exclusion Outweigh the Benefits of Inclusion

We have determined that the benefits of exclusion of the proposed Upper South Llano River Unit from critical habitat designation outweigh the benefits of inclusion of the unit because maintaining a positive working relationship and partnership with the landowner is vital to the conservation and recovery of the species. The benefits of designating critical habitat for the moss are few since these lands are privately owned and thus lack a trigger for section 7 consultation for adverse modification of critical habitat unless a project with a Federal nexus is proposed. Additionally, all habitat within the proposed critical habitat unit is occupied, so any project with a Federal nexus would require consultation with us due to the listing of the species. Section 9 of the Act provides few protections to listed plants, and protections to listed plants on private lands pertain only to prohibited actions conducted in knowing violation of any State law or regulation, or in violation of a State criminal trespass law. Without the presence of a Federal nexus which would require a consultation under section 7, the South Llano springs moss would have little to no protections. Since the only known population of this species occurs on this private land, the maintenance of a working relationship with the landowner is vital to the recovery and conservation of the species. Therefore, the benefits of

excluding this area from designation as critical habitat for the South Llano springs moss outweigh the benefits of inclusion.

Exclusion Will Not Result in Extinction of the Species

We have determined that excluding all proposed critical habitat from designation will not result in the extinction of the species, nor hinder its recovery. If a Federal action or Federal permitting occurs that may affect the moss, the listing of South Llano springs moss will require evaluation under the jeopardy standard of section 7 of the Act, even absent the designation of critical habitat, and thus will protect the species against extinction. Accordingly, based on the above discussion, the Secretary is exercising her discretion to exclude the entirety of the proposed Upper South Llano River Unit (approximately 0.48 ac (0.19 ha) of land) and, therefore, critical habitat for the moss will not be designated under section 4(b)(2) of the Act because the benefits of exclusion outweigh the benefits of inclusion and will not cause the extinction of the species.

Tribal Lands

Several Executive Orders, Secretary's Orders, and policies concern working with Tribes. These guidance documents generally confirm our trust responsibilities to Tribes, recognize that Tribes have sovereign authority to control Tribal lands, emphasize the importance of developing partnerships with Tribal governments, and direct the Service to consult with Tribes on a government-to-government basis.

A joint Secretary's Order that applies to both the Service and the National Marine Fisheries Service (NMFS)—Secretary's Order 3206, *American Indian Tribal Rights, Federal-Tribal Trust Responsibilities, and the Endangered Species Act* (June 5, 1997) (S.O. 3206)—is the most comprehensive of the various guidance documents related to Tribal relationships and Act implementation, and it provides the most detail directly relevant to the designation of critical habitat. In addition to the general direction discussed above, the appendix to S.O. 3206 explicitly recognizes the right of Tribes to participate fully in any listing process that may affect Tribal rights or Tribal trust resources; this includes the designation of critical habitat. Section 3(B)(4) of the appendix requires us to consult with affected Tribes when considering the designation of critical habitat in an area that may impact Tribal trust resources, Tribally owned fee lands, or the exercise of Tribal rights. That provision also instructs us to avoid including Tribal lands within a critical habitat designation unless the area is essential to conserve a listed species, and it requires us to evaluate and document the extent to which the conservation needs of the listed species can be achieved by limiting the designation to other lands.

Our implementing regulations at 50 CFR 424.19 and the 2016 Policy are consistent with S.O. 3206. When we undertake a discretionary exclusion analysis under section 4(b)(2) of the Act, in accordance with S.O. 3206 we consult with any Tribe whose Tribal trust resources, tribally owned fee lands, or Tribal rights may be affected by including any particular areas in the designation. We evaluate the extent to which the conservation needs of the species can be achieved by limiting the designation to other areas and give great weight to Tribal concerns in analyzing the benefits of exclusion.

However, S.O. 3206 does not override the Act's statutory requirement of designation of critical habitat. As stated above, we must consult with any Tribe when a designation of critical habitat may affect Tribal lands or resources. The Act requires us to identify areas that meet the definition of ''critical habitat'' (*i.e.,* areas occupied at the time of listing that contain the essential physical or biological features that may require special management or protection and unoccupied areas that are essential to the conservation of a species), without regard to land ownership. While S.O. 3206 provides important direction, it expressly states that it does not modify the Secretary's statutory authority under the Act or other statutes.

There are no Tribal lands or Tribal trust resources within the range of the South Llano springs moss.

Summary of Exclusions

As discussed above, based on the information provided by entities seeking exclusion, as well as any additional public comments we received, we evaluated whether certain lands in the proposed critical habitat were appropriate for exclusion from final designation pursuant to section 4(b)(2) of the Act. We are not designating critical habitat for the South Llano springs moss; the area we proposed for critical habitat designation but that we are excluding in this rule is described in the table below.

TABLE OF AREA EXCLUDED FROM CRITICAL HABITAT DESIGNATION BY PROPOSED CRITICAL HABITAT UNIT

Proposed unit	Specific area	Areas meeting the definition of critical habitat, in acres (hectares)	Areas excluded from critical habitat, in acres (hectares)
1: Upper South Llano River	Seven Hundred Springs	0.48 (0.19)	0.48 (0.19)

Required Determinations

National Environmental Policy Act (42 U.S.C. 4321 et seq.)

It is our position that, outside the jurisdiction of the U.S. Court of Appeals for the Tenth Circuit, we do not need to prepare environmental analyses pursuant to the National Environmental Policy Act (NEPA) in connection with regulations adopted pursuant to section 4(a) of the Act. We have determined that environmental assessments and environmental impact statements, as defined under the authority of the National Environmental Policy Act (NEPA; 42 U.S.C. 4321 *et seq.*), need not be prepared in connection with listing a species as an endangered or threatened species under the Act. We published a notice outlining our reasons for this determination in the **Federal Register** on October 25, 1983 (48 FR 49244). This position was upheld by the U.S. Court of Appeals for the Ninth Circuit (*Douglas County* v. *Babbitt,* 48 F.3d 1495 (9th Cir. 1995), cert. denied 516 U.S. 1042 (1996)).

Government-to-Government Relationship With Tribes

In accordance with the President's memorandum of April 29, 1994 (Government-to-Government Relations with Native American Tribal Governments; 59 FR 22951), Executive Order 13175 (Consultation and Coordination with Indian Tribal Governments), and the Department of the Interior's manual at 512 DM 2, we

readily acknowledge our responsibility to communicate meaningfully with Federally recognized Tribes on a government-to-government basis. In accordance with Secretary's Order 3206 of June 5, 1997 (American Indian Tribal Rights, Federal-Tribal Trust Responsibilities, and the Endangered Species Act), we readily acknowledge our responsibilities to work directly with Tribes in developing programs for healthy ecosystems, to acknowledge that Tribal lands are not subject to the same controls as Federal public lands, to remain sensitive to Indian culture, and to make information available to Tribes. No Tribal lands or Tribal trust resources will be affected by this rule.

References Cited

A complete list of references cited in this rulemaking is available on the internet at *https://www.regulations.gov* and upon request from the Austin Ecological Services Field Office (see **FOR FURTHER INFORMATION CONTACT**).

Authors

The primary authors of this final rule are the staff members of the Fish and Wildlife Service's Species Assessment Team and the Austin Ecological Services Field Office.

List of Subjects in 50 CFR Part 17

Endangered and threatened species, Exports, Imports, Plants, Reporting and recordkeeping requirements, Transportation, Wildlife.

Regulation Promulgation

Accordingly, we amend part 17, subchapter B of chapter I, title 50 of the Code of Federal Regulations, as set forth below:

PART 17—ENDANGERED AND THREATENED WILDLIFE AND PLANTS

■ 1. The authority citation for part 17 continues to read as follows:

Authority: 16 U.S.C. 1361–1407; 1531–1544; and 4201–4245, unless otherwise noted.

■ 2. Amend § 17.12, in paragraph (h), the List of Endangered and Threatened Plants, by:

■ a. Adding the heading ''MOSSES'' to the end of the table; and

■ b. Adding an entry for ''*Donrichardsia macroneuron*'' under the new heading ''MOSSES''.

The additions read as follows:

§ 17.12 Endangered and threatened plants.

* * * * *

(h) * * *

Scientific name	Common name	Where listed	Status	Listing citations and applicable rules
*	*	*	*	*
MOSSES				
Donrichardsia macroneuron	South Llano springs moss	Wherever found	E	88 FR [insert **Federal Register** page where the document begins], 4/27/2023.

Wendi Weber,

Acting Director, U.S. Fish and Wildlife Service.

[FR Doc. 2023–08846 Filed 4–26–23; 8:45 am]

BILLING CODE 4333–15–P

DEPARTMENT OF COMMERCE

National Oceanic and Atmospheric Administration

50 CFR Part 648

[Docket No. 230316–0077]

RTID 0648–XC789

Fisheries of the Northeastern United States; Atlantic Herring Fishery; 2023 River Herring and Shad Catch Cap Reached for Midwater Trawl Vessels in the Cape Cod Catch Cap Area

AGENCY: National Marine Fisheries Service (NMFS), National Oceanic and Atmospheric Administration (NOAA), Commerce.

ACTION: Temporary rule; possession limit adjustment.

SUMMARY: NMFS is implementing a 2,000-lb (907.2-kg) Atlantic herring possession limit for herring vessels fishing with midwater trawl gear in the Cape Cod Catch Cap Closure Area. This is required because NMFS projects that midwater trawl herring vessels will catch 95 percent of the river herring and shad catch cap allocated to the Cape Cod Catch Cap Area before the end of the fishing year. This action is intended to prevent overharvest of river herring and shad.

DATES: Effective 0001 hr local time, April 26, 2023, through December 31, 2023.

FOR FURTHER INFORMATION CONTACT: Maria Fenton, Fishery Management Specialist, 978–281–9196.

SUPPLEMENTARY INFORMATION: The Regional Administrator of the Greater Atlantic Regional Fisheries Office monitors river herring and shad catch by Atlantic herring vessels. River herring and shad catch caps are allocated to the herring fishery by area and gear type. The four river herring and shad catch caps that are currently allocated to the herring fishery are:

- Gulf of Maine Midwater Trawl Catch Cap;
- Cape Cod Midwater Trawl Catch Cap;
- Southern New England Bottom Trawl Catch Cap; and
- Southern New England Midwater Trawl Catch Cap.

Catch from all trips that land more than 6,600 lb (2,994 kg) of herring is counted towards the applicable river herring and shad catch cap. Regulations at 50 CFR 648.201(a)(4)(ii) require NMFS to implement a 2,000-lb (907.2-kg) herring possession limit for vessels fishing with the specified gear in a specified catch cap closure area beginning on the date that catch is projected to reach 95 percent of the river herring and shad catch cap for that area.

Based on vessel reports, dealer reports, and other available information, the Regional Administrator estimates that midwater trawl herring vessels will have caught 96 percent of the 2023 river herring and shad catch cap allocated to the Cape Cod Catch Cap Area by April 20, 2023. Therefore, effective 0001 hr local time April 26, 2023, through 2400 hr local time on December 31, 2023, midwater trawl vessels may not attempt or do any of the following: Fish for, possess, transfer, receive, land, or sell more than 2,000 lb (907.2 kg) of herring from the Cape Cod Catch Cap Closure Area per trip; or land herring from the Cape Cod Catch Cap Closure Area more than once per calendar day. Also effective 0001 hr local time, April 26, 2023, through 2400 hr local time, December 31, 2023, federally permitted dealers may not attempt or do any of the following: Purchase; receive; possess; have custody or control of; sell; barter; trade; or transfer more than 2,000 lb (907.2 kg) of herring per trip or calendar day from a midwater trawl vessel fishing in the Cape Cod Catch Cap Closure Area, unless it is from a vessel that enters port before 0001 hr local

time on April 26, 2023, and catch is landed in accordance with State management measures.

Midwater trawl vessels may transit through or land in the Cape Cod Catch Cap Closure Area with more than 2,000 lb (907.2 kg) of herring on board, provided that: The herring were caught in an area not subject to a 2,000-lb (907.2-kg) limit; all fishing gear is stowed and not available for immediate use as defined by § 648.2; and the vessel is issued a permit appropriate to the amount of herring on board and the area where the herring was harvested.

Classification

This action is required by 50 CFR part 648 and is exempt from review under Executive Order 12866.

NMFS finds good cause pursuant to 5 U.S.C. 553(b)(3)(B) to waive prior notice and the opportunity for public comment because it would be impracticable, unnecessary, and contrary to the public interest. Data only recently became available indicating that midwater trawl herring vessels will catch 95 percent of the river herring and shad catch cap allocated to the Cape Cod Catch Cap Area before the end of the fishing year. High-volume catch and landings in the herring fishery can increase river herring and shad catch relative to catch caps quickly. If implementation of this action is delayed to solicit prior public comment, the 2023 river herring and shad catch cap allocated to the Cape Cod Catch Cap Area will likely be exceeded; thereby undermining the conservation objectives of the Herring Fishery Management Plan (FMP). Additionally, the regulations at § 648.201(a)(4)(ii) are designed to be implemented as quickly as possible to prevent catch from exceeding river herring and shad catch caps and NMFS is acting in accordance with those regulations to carry out the fishery management plan under the authority provided in section 305(d) of the Magnuson-Stevens Fishery Conservation and Management Act. These regulations were subject to public notice and opportunity to comment when they were first adopted in 2014. Further, herring fishing industry participants monitor catch closely and anticipate potential possession limit adjustments as catch totals approach river herring and shad catch caps, and they expect these actions to occur in a timely way consistent with the FMP's objectives. For the reasons stated above, NMFS also finds good cause to waive the 30-day delayed effectiveness in accordance with 5 U.S.C 553(d)(3).

Authority: 16 U.S.C. 1801 *et seq.*

Dated: April 24, 2023.

Kelly Denit,

Director, Office of Sustainable Fisheries, National Marine Fisheries Service.

[FR Doc. 2023–08877 Filed 4–24–23; 4:15 pm]

BILLING CODE 3510–22–P

Proposed Rules

Federal Register
Vol. 88, No. 81
Thursday, April 27, 2023

This section of the FEDERAL REGISTER contains notices to the public of the proposed issuance of rules and regulations. The purpose of these notices is to give interested persons an opportunity to participate in the rule making prior to the adoption of the final rules.

DEPARTMENT OF AGRICULTURE

Agricultural Marketing Service

7 CFR Part 927

[Doc. No. AMS–SC–22–0089]

Pears Grown in Oregon and Washington; Continuance Referendum

AGENCY: Agricultural Marketing Service, USDA.

ACTION: Referendum order; correction.

SUMMARY: The Agricultural Marketing Service, USDA, published a document in the **Federal Register** of April 7, 2023, that directed a referendum be conducted among eligible Oregon and Washington pear growers to determine whether they favor continuance of the marketing order regulating the handling of pears grown in Oregon and Washington. This correction addresses errors regarding certain dates contained in the narrative of the referendum order.

DATES: Effective April 27, 2023.

FOR FURTHER INFORMATION CONTACT: Dale Novotny, Marketing Specialist, or Gary Olson, Chief, Western Region Branch, Market Development Division, Specialty Crops Program, Agricultural Marketing Service, USDA, 1220 SW 3rd Avenue, Suite 305, Portland, Oregon 97212; Telephone: (503) 326–2724, or Email: *DaleJ.Novotny@usda.gov* or *GaryD.Olson@usda.gov.*

SUPPLEMENTARY INFORMATION: In FR Doc 2023–07396, appearing on page 20780 in the **Federal Register** of Friday, April 7, 2023, in the second column, first paragraph, correct the referendum dates ''March 20 to March 31, 2023'' to read ''May 8 to May 30, 2023''. In addition, on page 20780, in the second column, third paragraph, correct the date ''March 31, 2023'' to read ''May 30, 2023''.

Erin Morris,

Associate Administrator, Agricultural Marketing Service.

[FR Doc. 2023–08911 Filed 4–26–23; 8:45 am]

BILLING CODE P

DEPARTMENT OF AGRICULTURE

Agricultural Marketing Service

7 CFR Part 981

[Doc. No. AMS–SC–21–0089]

Almonds Grown in California; Amendments to the Marketing Order

AGENCY: Agricultural Marketing Service, Department of Agriculture (USDA).

ACTION: Proposed rule.

SUMMARY: This proposed rule invites comments on proposed amendments to Marketing Order No. 981, which regulates the handling of almonds grown in California. The proposed amendments would modify certain marketing order provisions to facilitate orderly administration of the program. Additionally, the proposed amendments would modernize, simplify, or align language with current industry practices and definitions, and would establish authority to borrow funds. The proposal would also establish authority for the Almond Board of California (Board) to accept advanced assessments.

DATES: Comments must be received by June 26, 2023.

ADDRESSES: Interested persons are invited to submit written comments concerning this proposed rule. Comments must be sent to the Docket Clerk, Market Development Division, Specialty Crops Program, AMS, USDA, 1400 Independence Avenue SW, STOP 0237, Washington, DC 20250–0237; Fax: (202)720–8938; or via internet at: *https://www.regulations.gov.* Comments should reference the document number and the date and page number of this issue of the **Federal Register**. All comments will be made available for public inspection in the Office of the Docket Clerk during regular business hours, or can be viewed at: *https://www.regulations.gov.* Please be advised that the identity of the individuals or entities submitting the comments will be made public.

FOR FURTHER INFORMATION CONTACT: Thomas Nalepa, Marketing Specialist, or Matthew Pavone, Chief, Rulemaking Services Branch, Market Development Division, Specialty Crops Program, AMS, USDA, 1400 Independence Avenue SW, Stop 0237, Washington, DC 20250–0237; Telephone: (202) 720–2491, Fax: (202) 720–8938, or Email: *MarketOrderComment@usda.gov.*

Small businesses may request information on complying with this regulation by contacting Richard Lower, Market Development Division, Specialty Crops Program, AMS, USDA, 1400 Independence Avenue SW, Stop 0237, Washington, DC 20250–0237; Telephone: (202) 720–2491, or Email: *Richard.Lower@usda.gov.*

SUPPLEMENTARY INFORMATION: This action, pursuant to 5 U.S.C. 553, proposes to amend regulations issued to carry out a marketing order as defined in 7 CFR 900.2(j). This proposal is issued under Marketing Order No. 981, as amended (7 CFR part 981), regulating the handling of almonds grown in California. Part 981 (referred to as the ''Order'') is effective under the Agricultural Marketing Agreement Act of 1937, as amended (7 U.S.C. 601–674), hereinafter referred to as the ''Act.'' The Board locally administers the Order and comprises growers and handlers of almonds operating within the area of production.

Section 8c(17) of the Act (7 U.S.C. 608c(17)) and the applicable rules of practice and procedure governing the formulation of marketing agreements and orders (7 CFR part 900) authorize amendment of the Order through this informal rulemaking action. The Agricultural Marketing Service (AMS) will consider comments received in response to this proposed rule, and based on all the information available, will determine if the Order amendment is warranted. If AMS determines amendment of the Order is warranted, a subsequent proposed rule and notice of referendum would be issued, and producers would be allowed to vote for or against the proposed amendments. If appropriate, AMS would then issue a final rule effectuating any amendments approved by producers in the referendum.

AMS is issuing this proposed rule in conformance with Executive Orders 12866 and 13563. Executive Orders 12866 and 13563 direct agencies to assess all costs and benefits of available regulatory alternatives and, if regulation is necessary, to select regulatory approaches that maximize net benefits (including potential economic, environmental, public health and safety effects, distributive impacts and equity). Executive Order 13563 emphasizes the

importance of quantifying both costs and benefits, reducing costs, harmonizing rules, and promoting flexibility. This action falls within a category of regulatory actions that the Office of Management and Budget (OMB) exempted from Executive Order 12866 review.

This proposed rule has been reviewed under Executive Order 13175—Consultation and Coordination with Indian Tribal Governments, which requires agencies to consider whether their rulemaking actions would have Tribal implications. AMS has determined this proposed rule is unlikely to have substantial direct effects on one or more Indian tribes, on the relationship between the Federal Government and Indian Tribes, or on the distribution of power and responsibilities between the Federal Government and Indian Tribes.

This proposal has been reviewed under Executive Order 12988, Civil Justice Reform.

The Act provides that administrative proceedings must be exhausted before parties may file suit in court. Under section 8c(15)(A) of the Act (7 U.S.C. 608c(15)(A)), any handler subject to an order may file with USDA a petition stating that the order, any provision of the order, or any obligation imposed in connection with the order is not in accordance with law and request a modification of the order or to be exempted therefrom. A handler is afforded the opportunity for a hearing on the petition. After the hearing, USDA would rule on the petition. The Act provides that the district court of the United States in any district in which the handler is an inhabitant, or has his or her principal place of business, has jurisdiction to review USDA's ruling on the petition, provided an action is filed no later than 20 days after the date of entry of the ruling.

Section 1504 of the Food, Conservation, and Energy Act of 2008 (2008 Farm Bill) (Pub. L. 110–246) amended section 8c(17) of the Act, which in turn required the addition of supplemental rules of practice to 7 CFR part 900 (73 FR 49307; August 21, 2008). The amendment of section 608c(17) of the Act and the supplemental rules of practice authorize the use of informal rulemaking (5 U.S.C. 553) to amend Federal fruit, vegetable, and nut marketing agreements and orders. USDA may use informal rulemaking to amend marketing orders depending upon the nature and complexity of the proposed amendments, the potential regulatory and economic impacts on affected entities, and any other relevant matters.

AMS has considered these factors and has determined that the amendments proposed herein are not unduly complex and the nature of the proposed amendments is appropriate for utilizing the informal rulemaking process to amend the Order. This proposed rule encompasses a number of changes that are primarily administrative or modernizing in nature. These changes would simplify, clarify, or align Order language with current industry practices and definitions. A discussion of the potential regulatory and economic impacts on affected entities is discussed later in the ''Initial Regulatory Flexibility Analysis'' section of this proposed rule. The amendments would apply equally to all producers and handlers, regardless of size. The proposed amendments also have no additional impact on the reporting, record-keeping, or compliance costs of small businesses.

The Board unanimously recommended seven proposed Order amendments following deliberations at a public meeting held on August 11, 2020. The Board submitted its formal recommendation to amend the Order through the informal rulemaking process on August 9, 2021. The proposed rule would:

- Amend the Order to modify the definitions of ''Almonds'' and ''Shelled almonds'', and add a definition for ''Almond biomass'' (Proposal 1).
- Change the date utilized to determine the applicable handler volume for the purpose of tabulating handler votes in the nomination process for handler positions on the Board (Proposal 2).
- Replace obsolete references to ''Control Board'' with ''Board'' in two sections (Proposal 3).
- Simplify language pertaining to incoming quality control (Proposal 4).
- Change the date that the Board is required to submit volume regulation estimates and recommendations to the Secretary (Proposal 5).
- Remove language that distinguishes certain funds in the accounting of the Board's operating reserve fund and sets the reserve fund limit at approximately six-months' expenses instead of six-months' budget (Proposal 6).
- Add authority to accept advanced assessments and to borrow funds from commercial lenders (Proposal 7).

Proposal 1—Modification or Inclusion of Definitions for Almonds, Almond Biomass, and Shelled Almonds

Sections 981.4 and 981.6 define *Almonds* and *Shelled Almonds,* respectively, for the purposes of the Order. Specifically, as defined in the Order, ''*almonds* mean (unless otherwise specified) all varieties of almonds (except bitter almonds), either shelled or unshelled, grown in the State of California, and for the purposes of research includes almond shells and hulls.'' ''*Shelled almonds* mean raw or roasted almonds after the shells are removed and includes blanched, diced, sliced, slivered, cut, halved, or broken almonds, or any combination thereof. Additional almond products may be included by the Secretary from time to time upon consideration of a recommendation from the Board or other pertinent information.'' This proposal would amend § 981.4 to broaden the definition of *Almonds* to include almond biomass for research purposes. This proposal would add a new section, § 981.4 (a), to specifically define *almond biomass.* Section 981.6, which defines *Shelled almonds,* would also be amended to include any form that almonds without shells might take.

As the almond industry has significantly evolved since promulgation of the Order, the versatility of almond usage has also expanded.

In the mid-1970s, the Board sought to redefine almonds to include shells and hulls. A formal rulemaking hearing covering that and other proposals took place. The initial proposal sought to redefine almonds to include hulls and shells for the purpose of § 981.41. See 40 FR 50289.

Section 981.41 authorizes projects involving production and marketing research designed to assist, improve, or promote the marketing, distribution, consumption, or efficient production of almonds. Testimony at the hearing explained that research to find new and more profitable uses for, or better methods of, handling shells and hulls should be permitted under the Order. Testimony further indicated that shells and hulls together weigh approximately three times the kernelweight of almonds. Accordingly, a sizable quantity of shells and hulls is produced annually and represents a significant economic factor. Testimony indicated that grower returns could be improved if more profitable outlets or better methods of handling can be found for shells and hulls. See 41 FR 15341.

Testimony at the hearing further indicated that the Board should not undertake any marketing promotion including advertising activity for shells and hulls. Ultimately, the definition of almonds was revised to include hulls and shells for the purposes of research. See 41 FR 26852.

This proposal would amend § 981.4 to broaden the definition of *Almonds* to

include almond biomass for research purposes. This proposal would add a new section, § 981.4(a), to specifically define *almond biomass.*

In the past, biomass (hulls, shells, skins, prunings, etc.) offered limited additional value to the growers. Huller/shellers would primarily sell their hulls for feed, use the shells for bedding or power cogeneration, and burn woody biomass, such as whole trees or prunings. Now, with expanding production levels, the industry estimates that it generates over 5.6 billion pounds of hulls and shells alone each year. In addition, stricter environmental regulations have made it more difficult to dispose of organic material through burning. Consequently, the industry has devoted significant effort to identify new solutions to utilize waste material in the orchard or in other non-edible product streams.

With an increased focus on full utilization of what comes out of the almond orchard, innovative technologies and research have revealed more value-added applications for what were previously by-products with limited to no value. For example, almond skins, which are the result of blanching brownskin almonds, are being used for fiber addition, shells are incorporated into plastics using torrefaction, sugar can be extracted from hulls, and ''whole orchard recycling'' techniques incorporate chipped prunings and woody biomass into the soil. These new uses bring additional profitability to the grower.

Therefore, the Board recommended that the current almond definition in § 981.4 be broadened to accommodate all almond biomass, not just shells and hulls. It also recommended that the definition of almonds be further expanded to include § 981.4(a) to specifically define almond biomass as almond hulls, shells, skins, and woody biomass (*i.e.,* trees and prunings).

During discussions regarding the definition of ''almonds,'' Board members noted that their research and development projects should address the entire almond category. Such efforts should encompass all aspects of almond production, going beyond almond kernels, inshell almonds, and the by-product shells and hulls. The interest in innovative applications for almond by-products and biomass utility has expanded over the years. Specifically, the Board has prioritized research of water conservation, zero orchard waste production practices, environmentally friendly pest management tools, and additional ways to reduce carbon dioxide emissions.

The Board does not intend to engage in marketing promotion or advertising of almond biomass, nor does it intend to permit any credit-back reimbursements to be applied to biomass (just as such reimbursements were never applied to shells and hulls). In its marketing promotion and advertising activity for consumable almonds, the Board would likely refer to its research efforts associated with almond biomass and its focus on sustainability and improving grower returns.

During subsequent discussions, the Board emphasized that none of the changes in definitions would impact or materially expand the Board's authorities, nor would they expand the type of research or activities which are conducted by the Board. Rather, these changes would update the regulatory text to reflect current industry terminology and more accurately describe almond by-products that now represent additional value to the grower, which were previously viewed as waste.

Finally, to accommodate for new innovations in the almond industry, the Board recommended modifying the definition of shelled almonds in § 981.6 to include any form an almond without a shell might take, rather than specifying the exact almond form. This modification would simplify the language to provide flexibility in the event there are different forms or descriptors of almonds used in the future. The modifications to § 981.6 would strike ''raw or roasted'' and remove the overly prescriptive language ''blanched, diced, sliced, slivered, cut, halved, or broken almonds, or any combination thereof.''

Proposal 2—Almond Board of California Voting Date Change

Section 981.32(b)(2) of the Order establishes the criteria for how handlers may vote for Board nominees. This proposal would amend § 981.32(b)(2) by changing the handling period date for determining a handler's nomination weighting from December 31 to March 31 of the crop year in which the nominations are made (crop year being August 1 to the following July 31). Moving the date forward (further into the crop year) would allow for a more accurate determination of handler volume to be utilized when calculating each handler's weighting for Board nominations.

The volume of almonds handled, as reported by the handlers, determines each handler's weighted vote for membership on the Board. The Board issues assessment invoices to handlers four times per year on a set schedule. The Board currently uses the volume handled per the December 31 assessment invoice to establish a handler's weighted vote. When the nominations and term of office dates were changed in the last amendment to the Order in October 2019 (84 FR 50713), it shifted the period for voting to later in the year. With the reestablishment of election dates, the Board can now utilize each handler's March 31 assessment volume as the basis for computing handler volume for voting purposes. Moreover, as crop yields increase and deliveries of almonds from growers to handlers extend later into the crop year, using the March 31 assessment date to determine handling quantity would ensure that a larger proportion of the crop will be delivered and reported to the Board, and a more accurate estimate of handler volume may be utilized in the voting process.

This proposed date change would not impact how handler volume is calculated, nor would it have any impact on the voting process. The proposed date change would also take into consideration timing of Board meetings and election dates.

Proposal 3—Update Language Regarding the Board

Section 981.41(b) provides authorization for the Board to recommend research, development, and marketing promotion projects. However, the existing language in § 981.41(b) refers to the Board by its former name ''Control Board.'' This proposal would update this section to correctly refer to the Board by its current name.

Similarly, § 981.59(a), which provides authorization for the Board to determine the reserve obligation for handlers, refers to the Board by its old name ''Control Board.'' The proposed action would update this section to correctly refer to the Board by its current name.

Each of the proposed changes to §§ 981.41(b) and 981.59(a) are administrative in nature and would have no impact on the Board's activities.

Proposal 4—Revise Language Addressing Outlets for Inedible Kernels

Section 981.42(a) requires handlers to determine, through quality control inspections performed by the inspection agency, the percentage of inedible kernels received and report the determination to the Board. Such inedible kernels shall be delivered to the Board or a Board-approved alternate outlet. The current language specifies such outlets as ''crushers, feed manufacturers, or feeders'' and limits the delivery of inedible kernels to the

same. This proposal would change § 981.42(a) to refer to all delivery outlets approved by the Board for inedible kernels as ''accepted users'' and would authorize alternative outlets for such product, so long as they meet established criteria determined by the Board.

This change would broaden language related to approved outlets for inedible kernels in the incoming quality control regulations. Specifically, it would adopt the more common industry term—accepted users—to refer to the types of outlets for inedible kernels currently delineated in the Order (crushers, feed manufacturers, and feeders). The term is recognized by industry to encompass other disposition outlets not specifically prescribed, but commonly used, such as a landfill. Using the term ''accepted users'' would also not limit other disposition outlets that may be utilized in the future.

Further, the term ''accepted user'' is utilized later in the Administrative Requirements section of the Order, so the term is understood and utilized by the Board and the industry in the administration of the Order. Section 981.442(a)(5) stipulates the requirements for handlers to meet their disposition obligation. In that section, handlers must deliver inedible product to entities ''on record with the Board as accepted users.'' The Board utilizes Form ABC–34, *Application to be Approved as an Accepted User of Inedible Almonds and Almond Waste,* in the approval process for accepted users. This action would harmonize § 981.41(a) with other sections of the Order and the existing administrative oversight mechanisms of the Board.

Proposal 5—Volume Regulation Submission Date Change

Section 981.49 requires that the Board furnish to the Secretary estimates of the supply and demand for almonds, and the corresponding salable and reserve percentages to be established, by August 1 of each year that volume regulation is being considered. The estimates aid the Secretary in determining if volume regulation would tend to effectuate the policy of the Act and in fixing the appropriate salable and reserve percentages.

This proposal would change the date that such information must be furnished to the Secretary from August 1 to September 1 of each crop year. Revising the reporting date would allow for more data to be considered when making recommendations for volume regulation.

Currently, the Order specifies August 1 as the date when industry estimates and volume recommendation must be furnished to the Secretary. However, this date immediately follows the end of the crop year, and it provides little time for the Board to compile industry data and formulate recommendations for salable and reserve percentages. In addition, data pertinent to the subject are not available until after the August 1 date. As an example, the final position report of crop year shipments and commitments is not published until the first week of August.

The current submission date also limits the time available for discussion by the Board when considering volume control recommendations. The Board normally meets in early August, after the publication of National Agricultural Statistics Service's (NASS) Objective Forecast in July and year-end crop information are available. By moving the date of notification to the Secretary to September 1, the Board would avoid having to schedule a special meeting in July to meet the Order's requirement. The September 1 date would also allow the Board's staff to complete a full analysis utilizing final crop numbers and the NASS data. As such, the proposed date change would increase the time available for Board discussions and allow for more thorough data analysis, providing greater accuracy in the calculations that might be made for the reserve recommendation. This change would have no impact on crop estimates or other Board activities.

Proposal 6—Modification of the Accounting of Funds Held in Reserve

Section 981.81(b) stipulates authorized use and refund requirements for assessments collected but not utilized within the applicable crop year. Under the provisions in that paragraph, certain excess funds, if not expended, must be held as qualified reserve funds that may only be expended on marketing promotion expenses. Further, the paragraph refers to accounting for funds held in reserve as being segregated into separate ''portions'' of the reserve.

Section 981.81(c) prescribes requirements for the Board's financial reserve. Currently, the Board maintains its operating reserve in two ''portions,'' one consisting of funds to be used for administrative-research functions and another consisting of funds to be used for marketing promotion activities. The amount in each portion is not to exceed approximately six-months' budget for the respective activity area.

The Board has found it impractical to maintain separate accounting of excess and reserve funds for administrative-research purposes and marketing promotion purposes. The Board has authority to recommend an operating budget and assessment rate each year, and it can also draw from its operating reserve to fund operations at any time during the year. Maintaining separate accounting to designate reserve funds for certain distinct purposes, however, adds administrative burden with no recognizable benefit. While the accounting scheme may have served a purpose in the past, the Board believes that it is redundant and obsolete moving forward.

This proposal would revise the Order's regulatory language in §§ 981.81(b) and 981.81(c) regarding assessment accounting procedures and processes for funds held in reserve. Both sections refer to keeping separate the funds used for administrative-research activities and funds used for marketing promotion activities. To facilitate the efficient accounting of reserve funds moving forward, this proposal would remove language in § 981.81(b) that refers to the proportional segregation of reserve funds according to their administrative-research or marketing promotion use. Similarly, this proposal would strike language in § 981.81(c) which currently specifies that the reserve fund consists of an administrative-research portion and a marketing promotion portion. It would also modify the language that limits the amount held in reserve to not exceed ''approximately six-months' budget'' for each activity to read ''six-months' expenses'', without any reference to ''each activity.''

The recommended changes would not impact the percentage of the assessment available for credit-back, nor would it materially impact reserves. In addition, although there would not be separate reserve accounts for different activities, the Board and USDA would continue to know how all monies are spent and to which activities they are allocated through the Board's marketing policy, budget, and other approval and oversight mechanisms and records. This is an administrative change, clarifying in the Order language that each portion would not technically be maintained in separate accounts.

Proposal 7—Acceptance of Advanced Assessments and Borrowing Authority

Section 981.81 authorizes the collection of assessments from almond handlers to provide funds to meet authorized Board expenses and the operating reserve requirements. This proposal would create a new § 981.81(f) to authorize the Board to accept advance payments of assessments and to borrow funds from commercial lending

institutions to better ensure continuity in operations during periods when neither operating assessments nor reserve funds are sufficient to fund Board functions.

As almond tonnage and assessment revenue have increased since the Order's promulgation, the industry has approved increasingly larger budgets which have year-round financial commitments. However, growers do not necessarily deliver the entire assessable crop at one time, nor do handlers have the facilities to process the entire crop at one time, and handlers instead purchase and market almonds throughout the production cycle. As a result, only about 17 percent of assessment revenue is paid to the Board when the first crop year assessment invoice is sent to handlers in October. Consequently, the Board invoices for assessments in the second and third quarters of the crop year. Yet, many research activities and marketing programs are initiated early in the crop year, necessitating payment when services are performed, often well before the first assessments are received from October invoices. Although the Board currently maintains a reserve fund to help pay for early expenses, this fund is insufficient to advance some of the necessary payments. Authorizing the Board to accept advance assessment payments and to borrow from commercial lending institutions would help it manage and sustain program activities during times of cash flow deficiencies.

Board members further noted that the ability to borrow against a line of credit is a common tool authorized in other federal marketing orders, especially to accommodate expenses when the assessment revenue necessary to pay such expenses is not received until later in the year.

While addressing general business concerns about the potential risks associated with debt financing, the Board agreed that its internal control policies would be revised to reflect the new borrowing authorities. Notably, the Board stressed that these policies would include financing procedures that would require any borrowing by the Board to be reimbursed upon receipt of sufficient assessment revenue. Moreover, Board members stressed that any borrowing of funds would be short-term in nature, limited, and would not extend beyond the end of the crop year.

Initial Regulatory Flexibility Analysis

Pursuant to requirements set forth in the Regulatory Flexibility Act (RFA) (5 U.S.C. 601–612), AMS has considered the economic impact of this action on small entities. Accordingly, AMS has prepared this initial regulatory flexibility analysis.

The purpose of the RFA is to fit regulatory actions to the scale of businesses subject to such actions in order that small businesses will not be unduly or disproportionately burdened. Marketing orders issued pursuant to the Act are unique in that they are brought about through group action of essentially small entities acting on their own behalf.

There are approximately 7,600 almond growers in the production area and approximately 100 handlers subject to regulation under the Order. Small agricultural almond producers are defined by the Small Business Administration (SBA) as those having annual receipts of less than $3,250,000, and small agricultural service firms are defined as those having annual receipts of less than $30,000,000 (13 CFR 121.201). The National Agricultural Statistics Service (NASS) reported in its 2017 Census of Agriculture (Census) that there were 7,611 almond farms in the production area, of which 6,683 had bearing acres. Additionally, the Census indicates that out of the 6,683 California farms with bearing acres of almonds, 4,425 (66 percent) have fewer than 100 bearing acres.

In another publication, NASS reported a 2021 crop year average yield of 2,210 pounds per acre and a season average grower price of $1.76 per pound. Therefore, a 100-acre farm with an average yield of 2,210 pounds per acre would produce about 221,000 pounds of almonds (2,210 pounds times 100 acres equals 221,000 pounds). At $1.76 per pound, that farm's production would be valued at $388,960 (221,000 pounds times $1.76 per pound equals $388,960). Since the Census indicated that 66 percent of California's almond farms are less than 100 acres, it could be concluded that the majority of California almond growers had annual receipts from the sale of almonds of less than $388,960 for the 2020–21 crop year, which is below the SBA threshold of $3,250,000 for small producers. Therefore, the majority of growers may be classified as small businesses.

To estimate the proportion of almond handlers that would be considered small businesses, it was assumed that the unit value per pound of almonds exported in a particular year could serve as a representative almond price at the handler level. A unit value for a commodity is the value of exports divided by the quantity exported. Data from the Global Agricultural Trade System (GATS) database of USDA's Foreign Agricultural Service showed that the value of almond exports from August 2020 to July 2021 (combining shelled and inshell) was $4.647 billion. The quantity of almond exports over that time-period was 2.162 billion pounds. Dividing the export value by the quantity yields a unit value of $2.15 per pound ($4.647 billion divided by 2.162 billion pounds equals $2.15).

NASS estimated that the California almond industry produced 2.915 billion pounds of almonds in 2021. Applying the $2.15 derived representative handler price per pound to total industry production results in an estimated total revenue at the handler level of $6.267 billion (2.915 billion pounds × $2.15 per pound). With an estimated 100 handlers in the California almond industry, average revenue per handler would be approximately $62.67 million ($6.267 billion divided by 100). Assuming a normal distribution of revenues, most almond handlers shipped almonds valued at more than $30,000,000 during the 2020–21 crop year. Therefore, the majority of handlers may be classified as large businesses.

This proposed rule would revise multiple provisions in the Order's subpart regulating handling of California almonds. The proposed rule would:

- Amend the Order to modify the definitions of ''Almonds'' and ''Shelled almonds'', and add a definition for ''Almond biomass'' (Proposal 1).
- Change the date utilized to determine the applicable handler volume for the purpose of tabulating handler votes in the nomination process for handler positions on the Board (Proposal 2).
- Replace obsolete references to ''Control Board'' with ''Board'' in two sections (Proposal 3).
- Simplify language pertaining to incoming quality control (Proposal 4).
- Change the date that the Board is required to submit volume regulation estimates and recommendations to the Secretary (Proposal 5).
- Remove language that distinguishes certain funds in the accounting of the Board's operating reserve fund and set the reserve fund limit at approximately six-months' expenses instead of six-months' budget (Proposal 6).
- Add authority to accept advanced assessments and to borrow funds from commercial lenders (Proposal 7).

Proposals 1, 3, and 4 are modernizing in nature and align Order provisions with current industry definitions and practices in §§ 981.4, 981.6, 981.41(b), and 981.59(a). Proposal 1 would also add § 981.4(a) to define *Almond Biomass* and simplify language in § 981.42(a) to identify disposition

outlets more broadly as *Accepted Users.* There are no substantial changes or additional requirements to industry practices effectuated as a result of these proposed amendments.

Proposals 2 and 5 would adjust or align dates to allow for the inclusion of more available data when determining weighting of handler votes for Board nominations (§ 981.32(b)(2)) and providing volume regulation recommendations to the Secretary (§ 981.49). These changes would not impact how volume is calculated for handler vote weighting, materially affect crop estimates, or adversely impact Board activities.

Proposal 6 would remove language that distinguishes between funds for administrative-research and funds for marketing promotion activities in the accounting of excess funds (§ 981.81(b) and (c)). In addition, it would set the reserve fund limit at approximately six-months' expenses instead of the current six-months' budget. This is an administrative adjustment that provides technical clarification on the accounting of assessments and reserves. It does not impact the percentage of assessments available for refund, nor does it materially impact reserves.

Proposal 7 would add a new section, § 981.81(f), to allow the Board to accept advance payment of assessments and borrow funds against the current season's assessment receipts using a line of credit from a commercial financial institution to provide additional flexibility in managing its cashflows and expenses.

This proposed rule encompasses a number of changes that are primarily administrative or modernizing in nature. These changes would simplify, clarify, or align Order language with current industry practices and definitions, and include a common authority to borrow funds. The amendments would apply equally to all producers and handlers, regardless of size. The proposed amendments also have no additional impact on the reporting, record-keeping, or compliance costs of small businesses. Proposal 7 would authorize the Board to receive advance assessment payments and borrow funds. These authorities are necessary to ensure that adequate funds are available throughout the year to pay the Board's management and administrative expenses. Any borrowing or interest costs associated with the borrowing provision in the proposed rule would be calculated and accounted for within the Board's annual budget.

Alternatives to this proposed rule were considered, including making no changes at this time. However, the Board believes it would be beneficial to update Order language to better reflect the current state of the almond industry and the industry's vernacular, and to have the means and funds necessary to effectively administer the program.

Paperwork Reduction Act

In accordance with the Paperwork Reduction Act of 1995 (44 U.S.C. Chapter 35), the Order's information collection requirements have been previously approved by OMB and assigned OMB No. 0581–0178, Vegetable and Specialty Crops. No changes in those requirements are necessary because of this proposed action. Should any changes become necessary, they would be submitted to OMB for approval.

This proposed rule would impose no additional reporting or recordkeeping requirements on either small or large almond handlers. As with all Federal marketing order programs, reports and forms are periodically reviewed to reduce information requirements and duplication by industry and public-sector agencies.

AMS is committed to complying with the E-Government Act, to promote the use of the internet and other information technologies to provide increased opportunities for citizen access to Government information and services, and for other purposes.

AMS has not identified any relevant Federal rules that duplicate, overlap, or conflict with this proposed action.

The Board's meetings are widely publicized throughout the California almond production area. All interested persons are invited to attend the meeting and encouraged to participate in Board deliberations on all issues. Like all Board meetings, the meetings held on December 9, 2019; August 11, 2020; and December 7, 2020, were public, and all entities, both large and small, were encouraged to express their views on the proposals.

Interested persons are invited to submit comments on the proposed amendments to the Order, including comments on the regulatory and information collection impacts of this proposed action on small businesses.

Following analysis of any comments received on the amendments in this proposed rule, AMS will evaluate all available information and determine whether to proceed. If appropriate, a proposed rule and notice of referendum would be issued, and producers would be provided the opportunity to vote for or against the proposed amendments. Information about the referendum, including dates and voter eligibility requirements, would be published in a future issue of the **Federal Register**. If appropriate, a final rule would then be issued to effectuate any amendments favored by producers participating in the referendum.

A small business guide on complying with fruit, vegetable, and specialty crop marketing agreements and orders may be viewed at: *https://www.ams.usda.gov/rules-regulations/moa/small-businesses.* Any questions about the compliance guide should be sent to Richard Lower at the previously mentioned address in the **FOR FURTHER INFORMATION CONTACT** section.

General Findings

The findings hereinafter set forth are supplementary to the findings and determinations which were previously made in connection with the issuance of Marketing Order 981; and all said previous findings and determinations are hereby ratified and affirmed, except insofar as such findings and determinations may be in conflict with the findings and determinations set forth herein.

1. Marketing Order 981 as hereby proposed to be amended and all the terms and conditions thereof, would tend to effectuate the declared policy of the Act;

2. Marketing Order 981 as hereby proposed to be amended regulates the handling of almonds grown in California and is applicable only to persons in the respective classes of commercial and industrial activity specified in the Order;

3. Marketing Order 981 as hereby proposed to be amended is limited in application to the smallest regional production area which is practicable, consistent with carrying out the declared policy of the Act, and the issuance of several marketing orders applicable to subdivisions of the production area would not effectively carry out the declared policy of the Act;

4. Marketing Order 981 as hereby proposed to be amended prescribes, insofar as practicable, such different terms applicable to different parts of the production area as are necessary to give due recognition to the differences in the production and marketing of almonds produced or packed in the production area; and

5. All handling of almonds grown or handled in the production area, as defined in Marketing Order 981 is in the current of interstate or foreign commerce or directly burdens, obstructs, or affects such commerce.

A 60-day comment period is provided to allow interested persons to respond to these proposals. Any comments received on the amendments proposed

in this rule will be analyzed, and if AMS determines to proceed based on all the information presented, a producer referendum would be conducted to determine producer support for the proposed amendments. If appropriate, a final rule would then be issued to effectuate the amendments favored by producers participating in the referendum.

List of Subjects in 7 CFR Part 981

Marketing agreements, Nuts, Reporting and recordkeeping requirements.

For the reasons set forth in the preamble, the Agricultural Marketing Service proposes to amend 7 CFR part 981 as follows:

PART 981—ALMONDS GROWN IN CALIFORNIA

■ 1. The authority citation for 7 CFR part 981 continues to read as follows:

Authority: 7 U.S.C. 601–674.

■ 2. Revise § 981.4 to read as follows:

§ 981.4 Almonds.

Almonds means (unless otherwise specified) all varieties of almonds (except bitter almonds), either shelled or unshelled, grown in the State of California, and, for the purposes of research includes almond biomass.

■ 3. Add § 981.4a to read as follows:

§ 981.4a Almond Biomass.

Almond Biomass means the hulls, shells, and skins of harvested almonds and woody biomass derived from almond trees (*e.g.,* tree limbs, bark, prunings).

■ 4. In § 981.6 revise the first sentence to read as follows:

§ 981.6 Shelled almonds.

Shelled almonds mean almonds after the shells are removed and includes any form those almonds might take. * * *

■ 5. Revise § 981.32 paragraph (b)(2) to read as follows:

§ 981.32 Nominations.

* * * * *

(b) * * *

(2) Each handler may vote for a nominee for each position representing the group to which the handler belongs. Each handler vote shall be weighted by the quantity of almonds (kernel weight basis computed to the nearest whole ton) handled for the handler's own account through March 31 of the crop year in which nominations are made. The nominee for each position shall be the person receiving the highest weighted vote for the position.

* * * * *

§ 981.41 [Amended]

■ 6. In § 981.41 paragraph (b) remove the word ''Control''.

§ 981.42 [Amended]

■ 7. In § 981.42 paragraph (a) the second sentence, removing the words ''accepted crushers, feed manufacturers, or feeders'' and adding, in their place the words ''approved accepted users.''

§ 981.49 [Amended]

■ 8. In § 981.49, in the introductory text removing the word ''August'' and adding in its place the word ''September''.

§ 981.59 [Amended]

■ 9. In § 981.59 paragraph (a), remove the word ''Control''.

■ 10. Amend § 981.81 by:

■ a. Revising the third and fourth sentences in paragraph (b);

■ b. Revising paragraph (c); and

■ c. Adding paragraph (f).

The revisions and addition read as follows:

§ 981.81 Assessment.

* * * * *

(b) * * * Any amounts, not credited pursuant to § 981.41 for a crop year may be used by the Board for its marketing promotion expenses of the succeeding crop year, and any unexpended portion of those amounts at the end of that crop year shall be retained in the operating reserve fund. Any funds of the operating reserve fund in excess of the level authorized pursuant to paragraph (c) of this section shall be refunded to handlers or used to reduce the assessment rate of the subsequent crop year, as the Board may determine. * * *

(c) *Reserves.* The Board may maintain an operating reserve fund which shall not exceed approximately six-months' expenses or such lower amount as the Board may establish with the approval of the Secretary: *Provided,* That this limitation shall not restrict the temporary retention of excess funds for the purpose of stabilizing or reducing the assessment rate of a crop year. To the extent that funds from current crop year assessments are inadequate, funds in the operating reserve may be used for the authorized activities of the crop year. Funds so used, and not exceeding the six-month limitation, shall be replaced to the extent practicable from assessments subsequently collected for the crop year.

* * * * *

(f) *Advanced Assessments and Commercial Loans.* To provide funds for the administration of the programs during the part of a crop year when neither sufficient operating reserve funds nor sufficient revenue from assessment on the current season's receipts are available, the Board may accept payment of handler assessments in advance of the date when due or may borrow funds from a commercial lending institution for such purposes.

Erin Morris,

Associate Administrator, Agricultural Marketing Service.

[FR Doc. 2023–08851 Filed 4–26–23; 8:45 am]

BILLING CODE P

DEPARTMENT OF AGRICULTURE

Agricultural Marketing Service

7 CFR Part 981

[Doc. No. AMS–SC–22–0069]

Marketing Order Regulations for Almonds Grown in California

AGENCY: Agricultural Marketing Service, Department of Agriculture (USDA).

ACTION: Proposed rule.

SUMMARY: This proposed rule would implement a recommendation from the Almond Board of California (Board) to make changes to multiple provisions in the administrative requirements prescribed under the Federal marketing order regulating the handling of almonds grown in California (Order). This action would amend administrative requirements regulating quality control, exempt dispositions, and interest and late charges provisions. In addition, the proposed rule would stay two sections of the administrative requirements that define almond butter and stipulate disposition in reserve outlets by handlers to facilitate the efficient administration of the Order.

DATES: Comments must be received by June 26, 2023. Comments on the forms and information collection must also be received by June 26, 2023.

ADDRESSES: Interested persons are invited to submit written comments concerning this proposed rule. Comments must be sent to the Docket Clerk, Market Development Division, Specialty Crops Program, AMS, USDA, 1400 Independence Avenue SW, Stop 0237, Washington, DC 20250–0237; Fax: (202) 720–8938; or via internet at: *https://www.regulations.gov.* Comments should reference the document number and the date and page number of this issue of the **Federal Register**. All comments submitted in response to this proposed rule will be included in the record and will be made available for public inspection in the Office of the Docket Clerk during regular business

hours, or viewed at: *https://www.regulations.gov.* Please be advised that the identity of individuals or entities submitting comments will be made public.

FOR FURTHER INFORMATION CONTACT: Barry Broadbent, Senior Marketing Specialist, or Gary Olson, Regional Director, West Region Field Office, Market Development Division, Specialty Crops Program, AMS, USDA; Telephone: (559) 487–5901, Fax: (559) 487–5906, or Email: *Barry.Broadbent@usda.gov* or *GaryD.Olson@usda.gov.*

Small businesses may request information on complying with this regulation by contacting Richard Lower, Market Development Division, Specialty Crops Program, AMS, USDA, 1400 Independence Avenue SW, Stop 0237, Washington, DC 20250–0237; Telephone: (202) 720–2491, Fax: (202) 720–8938, or Email: *Richard.Lower@usda.gov.*

SUPPLEMENTARY INFORMATION: This action, pursuant to 5 U.S.C. 553, proposes to amend regulations issued to carry out a marketing order as defined in 7 CFR 900.2(j). This proposed rule is issued under Marketing Order No. 981, as amended (7 CFR part 981), regulating the handling of almonds grown in California. Part 981 (referred to as the ''Order'') is effective under the Agricultural Marketing Agreement Act of 1937, as amended (7 U.S.C. 601–674), hereinafter referred to as the ''Act.'' The Board locally administers the Order and comprises growers and handlers of almonds operating within the production area.

The Agricultural Marketing Service (AMS) is issuing this proposed rule in conformance with Executive Orders 12866 and 13563. Executive Orders 12866 and 13563 direct agencies to assess all costs and benefits of available regulatory alternatives and, if regulation is necessary, to select regulatory approaches that maximize net benefits (including potential economic, environmental, public health and safety effects, distributive impacts, and equity). Executive Order 13563 emphasizes the importance of quantifying both costs and benefits, reducing costs, harmonizing rules, and promoting flexibility. This action falls within a category of regulatory actions that the Office of Management and Budget (OMB) exempted from Executive Order 12866 review.

This proposed rule has been reviewed under Executive Order 13175—Consultation and Coordination with Indian Tribal Governments, which requires agencies to consider whether their rulemaking actions would have Tribal implications. AMS has determined this proposed rule is unlikely to have substantial direct effects on one or more Indian Tribes, on the relationship between the Federal Government and Indian Tribes, or on the distribution of power and responsibilities between the Federal Government and Indian Tribes.

This proposed rule has been reviewed under Executive Order 12988, Civil Justice Reform. This proposed rule is not intended to have retroactive effect.

The Act provides that administrative proceedings must be exhausted before parties may file suit in court. Under section 608c(15)(A) of the Act, any handler subject to an order may file with USDA a petition stating that the order, any provision of the order, or any obligation imposed in connection with the order is not in accordance with law and request a modification of the order or to be exempted therefrom. A handler is afforded the opportunity for a hearing on the petition. After the hearing, USDA would rule on the petition. The Act provides that the district court of the United States in any district in which the handler is an inhabitant, or has his or her principal place of business, has jurisdiction to review USDA's ruling on the petition, provided an action is filed not later than 20 days after the date of the entry of the ruling.

This proposed rule would amend administrative requirements in the Order regulating quality control, exempt dispositions, and interest and late charges provisions. In addition, the proposed rule would stay two sections of the administrative requirements that define almond butter and stipulate disposition in reserve outlets by handlers. These proposed changes modify the requirements to reflect updates in industry practices and are expected to help facilitate the orderly administration of the Order.

The Board initially recommended the changes proposed herein, along with proposed changes to the Order's roadside stand exemption and credit-back provisions, at meetings held on December 7, 2020, and June 17, 2021. AMS subsequently published a proposed rule addressing the aggregate of those proposed changes on February 22, 2022 (87 FR 9455), with a 60-day comment period ending April 25, 2022. Four comments were received during the comment period. One of those comments opposed changes to the credit-back provision and further questioned the Board's administrative process in recommending the proposed changes to AMS.

After consideration of the comments received during the proposed rule's initial comment period, AMS reopened the comment period for 15 additional days from June 22, 2022, to July 7, 2022 (87 FR 37240). During the reopened comment period, 1,155 comments were received. Approximately 98 percent of the comments were opposed to the proposed changes to the roadside stand exemption.

Given the opposition to proposed changes to the credit-back and roadside stand exemption provisions in the Order, AMS published a withdrawal of the proposed rule in the **Federal Register** on August 22, 2022 (87 FR 51270).

The Board met on September 30, 2022, and unanimously recommended the resubmission of proposed changes to the Order's regulations, minus the previously proposed changes to the credit-back and roadside stand exemption provisions. Excepting the previously discussed provisions that were removed, the modifications to the Order's regulations, as proposed herein, are identical to the changes proposed in the initial proposed rule published February 22, 2022 (87 FR 9455).

Multiple sections in the Order provide the authority for this proposed action. The authorities are cited with the descriptions of each of the proposed changes in the following narrative.

Section 981.42 of the Order provides the authority to establish quality control regulations for both incoming and outgoing product. Section 981.442 of the Order's administrative requirements establishes quality control regulations under that authority. Section 981.442(a) establishes the quality requirements for incoming product received by handlers. Section 981.442(b) establishes the quality requirements for outgoing product prior to being shipped by handlers.

This proposal would modify provisions in § 981.442(a) to clarify ambiguous language, remove irrelevant dates, and more clearly define ''accepted user'' as it is referenced in the regulations. The proposed rule would also relax the requirements for handlers in meeting their disposition obligation under the regulations. The incoming quality requirements would be amended to allow inedible kernels, foreign material, and other defects sorted from off-site cleaning facilities to be credited to a handler's disposition obligation. In addition, almond meal would be allowed to meet the non-inedible portion of the disposition obligation, with the meal content to be determined in a manner acceptable to the Board.

In § 981.442(b), the proposed rule would amend the regulations to facilitate handlers utilizing off-site

cleaning and treatment facilities in fulfillment of their quality control requirements. The proposal would allow the transfer of product for off-site cleaning without being considered a shipment, would designate off-site treatment facilities as ''custom processors,'' and would establish application and approval procedures for Board authorization of such custom processors. This action would also clarify the roles of the Technical Expert Review Panel (TERP) and the Board in administering the program as detailed in several provisions in § 981.442(b). Lastly, the proposed rule would refine the duties of a Direct Verifiable (DV) program auditor to disallow individuals who conduct process validations from being named as the DV auditor for that same equipment used in the treatment process.

Section 981.50 of the Order establishes handler reserve obligation requirements. Under those Order provisions, certain products are exempted from the reserve obligation, subject to the accountability of the Board. Section 981.450 establishes the provisions for exempt dispositions under the reserve obligation. This proposed rule would enhance the procedures currently in place for the Board to account for exempt dispositions. Under the proposed rule, outlets for exempted product would need to be pre-approved by the Board in accordance with the requirements contained in § 981.442(a)(7).

Section 981.66(b) of the Order establishes the conditions governing the disposition of reserve product. Within that paragraph, diversion of reserve almonds to be manufactured into almond butter is listed as an allowable outlet for such product. Section 981.466 further defines ''almond butter'' as used in § 981.66. The expanded definition of almond butter is no longer relevant in the administration of the program. The proposed rule would stay § 981.466 indefinitely.

Section 981.467 establishes the requirements regarding the disposition in reserve outlets by handlers. The section details the establishment of agents of the Board, delineates reserve credit in satisfaction of a reserve obligation, sets minimum prices, and establishes certain dates pertaining to the reserve disposition obligations. As the Order is not currently regulating volume, and a significant portion of the requirements is outdated, the provisions in § 981.467 are not currently relevant to the administration of the Order. As such, this proposed rule would stay the entire section indefinitely.

Lastly, § 981.481 stipulates the requirements for submission of handler assessment payments, which includes documentary requirements for proof of timely submission of assessment payments. Other than actual receipt of payment in the Board's office within 30 days of the invoice date on the handler's statement, the current provisions only identify the U.S. Postal Service postmark as proof of timely submission. This proposed rule would add ''or by some other verifiable delivery tracking system'' to allow handlers alternative delivery methods.

The Board believes that the changes recommended herein are necessary to update the Order's administrative requirements to adapt to changes in the industry and to reflect current industry practices. Many of the revisions may be considered conforming changes, but the proposed rule also makes changes to the quality control regulations that the Board views as essential to the continued efficient administration of the Order. The proposed changes contained herein are expected to facilitate the orderly marketing of California almonds and benefit growers and handlers in the industry.

Initial Regulatory Flexibility Analysis

Pursuant to requirements set forth in the Regulatory Flexibility Act (RFA) (5 U.S.C. 601–612), AMS has considered the economic impact of this action on small entities. Accordingly, AMS has prepared this initial regulatory flexibility analysis.

The purpose of the RFA is to fit regulatory actions to the scale of businesses subject to such actions in order that small businesses will not be unduly or disproportionately burdened. Marketing orders issued pursuant to the Act are unique in that they are brought about through group action of essentially small entities acting on their own behalf.

There are approximately 7,600 almond growers in the production area and approximately 100 handlers subject to regulation under the Order. Small agricultural almond producers are defined by the Small Business Administration (SBA) as those having annual receipts of less than $3,250,000, and small agricultural service firms are defined as those having annual receipts of less than $30,000,000 (13 CFR 121.201).

National Agricultural Statistics Service (NASS) reported in its 2017 Census of Agriculture (Census) that there were 7,611 almond farms in the production area, of which 6,683 had bearing acres. Additionally, the Census indicates that out of the 6,683 California farms with bearing acres of almonds, 4,425 (66 percent) have fewer than 100 bearing acres.

In another publication, NASS reported a 2021 crop year average yield of 2,210 pounds per acre and a season average grower price of $1.76 per pound. Therefore, a 100-acre farm with an average yield of 2,210 pounds per acre would produce about 221,000 pounds of almonds (2,210 pounds times 100 acres equals 221,000 pounds). At $1.76 per pound, that farm's production would be valued at $388,960 (221,000 pounds times $1.76 per pound equals $388,960). Since the Census indicated that 66 percent of California's almond farms are less than 100 acres, it could be concluded that the majority of California almond growers had annual receipts from the sale of almonds of less than $388,960 for the 2020–21 crop year, which is below the SBA threshold of $3,250,000 for small producers. Therefore, the majority of growers may be classified as small businesses.

To estimate the proportion of almond handlers that would be considered small businesses, it was assumed that the unit value per pound of almonds exported in a particular year could serve as a representative almond price at the handler level. A unit value for a commodity is the value of exports divided by the quantity exported. Data from the Global Agricultural Trade System (GATS) database of USDA's Foreign Agricultural Service showed that the value of almond exports from August 2020 to July 2021 (combining shelled and inshell) was $4.647 billion. The quantity of almond exports over that time-period was 2.162 billion pounds. Dividing the export value by the quantity yields a unit value of $2.15 per pound ($4.647 billion divided by 2.162 billion pounds equals $2.15).

NASS estimated that the California almond industry produced 2.915 billion pounds of almonds in 2021. Applying the $2.15 derived representative handler price per pound to total industry production results in an estimated total revenue at the handler level of $6.267 billion (2.915 billion pounds × $2.15 per pound). With an estimated 100 handlers in the California almond industry, average revenue per handler would be approximately $62.67 million ($6.267 billion divided by 100). Assuming a normal distribution of revenues, most almond handlers shipped almonds valued at more than $30,000,000 during the 2010–21 crop year. Therefore, the majority of handlers may be classified as large businesses.

This proposed rule would revise multiple provisions in the Order's administrative requirements. This

proposal would amend regulations covering the Order's quality control, exempt dispositions, and interest and late charges provisions. In addition, it would stay regulations contained in §§ 981.466 and 981.467. One of the sections that would be stayed defines almond butter and the other regulates almond disposition in reserve outlets by handlers. Both sections would be stayed indefinitely.

More specifically, in § 981.442(a), the proposed rule would clarify ambiguous language, remove irrelevant dates, and more clearly define the term ''accepted user'' as it is referenced in the regulations. It would also relax the requirements for handlers in meeting their disposition obligation under the Order.

Additionally, in § 981.442(b), the proposed rule would allow the transfer of product for off-site cleaning without being considered a shipment, designate off-site treatment facilities as ''custom processors,'' and establish the application and approval procedures for Board authorization of custom processors. This proposal would also clarify the roles of the TERP and the Board in administering the program in several subparagraphs in the section. Further, the proposed rule would refine the definition of a DV program auditor to disallow individuals who conduct process validations from being named as the DV auditor for that same equipment used in the treatment process.

This proposed rule would also amend § 981.450 to require outlets for exempted product be Board-approved, in accordance with § 981.442(a)(7).

Further, under the proposed action, § 981.466, which defines ''almond butter'' as it is used in § 981.66(b), is no longer relevant in the administration of the program and would be stayed indefinitely. In addition, as the Order is not currently regulating volume, § 981.467 is not necessary for the administration of the Order and would also be stayed indefinitely.

Lastly, this action would revise § 981.481 by adding ''or by some other verifiable delivery tracking system'' to the requirements to allow handlers alternative trackable delivery methods for demonstration of timely submission of assessment payments.

The authorities for the proposed changes above are contained in §§ 981.42, 981.50, 981.66, 981.67, and 981.81 of the Order.

The Board believes that the administrative requirement revisions recommended herein are necessary to reflect changes in the industry and to update the regulations to reflect current practices. Many of the modifications may be considered conforming changes, but this proposal also makes substantive changes to quality control requirements that the Board views as essential to the efficient administration of the Order. The proposed changes contained herein are expected to facilitate the orderly marketing of California almonds and benefit growers and handlers in the industry.

Initially, the Board unanimously recommended the changes contained herein, along with other recommended changes that were subsequently removed from consideration. The Board unanimously recommended the proposed changes contained herein at a meeting on September 30, 2022.

AMS anticipates that this proposed rule would impose minimal, if any, additional costs on handlers or growers, regardless of size. The proposed changes to the administrative requirements are intended to clarify certain provisions, remove ambiguous and obsolete language, and adapt the requirements to facilitate the orderly marketing of almonds. The benefits derived from this proposed rule are not expected to be disproportionately more or less for small handlers or growers than for larger entities.

The Board considered alternatives to this action, including making no changes to the current requirements and only making changes to some of the requirements. After consideration of all the alternatives, and in consultation with AMS, the Board determined that making the recommended changes would be the best option to facilitate the Order's administration, contribute to the orderly marketing of almonds, and provide the greatest benefit to growers and handlers while maintaining the integrity of the Order.

Further, the Board's meeting was widely publicized throughout the California almond industry, and all interested persons were invited to attend the meetings and participate in Board deliberations. Like all Board meetings, the September 30, 2022, meeting was a public meeting, and all entities, both large and small, were able to express their views on this issue. Finally, interested persons are invited to submit comments on this proposed rule, including the regulatory and information collection impacts of this proposed action on small businesses.

In accordance with the Paperwork Reduction Act of 1995, (44 U.S.C. Chapter 35), the Order's information collection requirements have been previously approved by the Office of Management and Budget (OMB) and assigned OMB Nos. 0581–0178 (Vegetable and Specialty Crops) and 0581–0242 (Almond Salmonella). This proposed rule announces AMS's intent to request approval from OMB for amendments made to existing information collections under OMB Nos. 0581–0178 and 0581–0242, and for a new information collection under OMB No. 0581–NEW.

Upon finalization of the proposed rule, AMS will submit a Justification for Change to OMB for the ABC Form 52—Direct Verifiable (DV) Program for Further Processing of Untreated Almonds Application Form (OMB No. 0581–0242). The form is necessary to administer the DV Program established by § 981.442(b)(6)(i) in the Order's quality control requirements. The proposed rule would change the body that approves DV Program applications from the TERP to the Board. The instructions that accompany ABC Form 52 would need to be revised accordingly.

Lastly, this proposed rule would create a new form for California almond handlers, titled ABC Form 55—Custom Processor Application.

Title: Custom Processor Application (7 CFR part 981).

OMB Number: 0581–NEW.

Type of Request: New Collection.

Abstract: The information requirements in this request are essential to carry out the intent of the Act and to administer the Order. The Order is effective under the Act, and USDA is responsible for the oversight of the Order's administration.

The Order's quality control requirements for outgoing product require handlers to subject their almonds to a treatment process or processes prior to shipment to reduce potential *Salmonella* bacteria contamination. The Order's quality control requirements allow handlers to utilize off-site treatment facilities to fulfill that requirement. The Board unanimously recommended that the Order's quality control requirements be amended to define off-site treatment facilities located within the production area as ''custom processors'' and to require such custom processors to annually apply to the Board for approval.

An individual desiring approval as a custom processor must demonstrate that their facility meets the Order's treatment process requirements and must submit an application to the Board. This form, numbered ABC Form 55 and titled ''Custom Processor Application,'' would be submitted directly to the Board once each year no later than July 31. The application would provide the Board with the name of the applicant, the location of each treatment facility

covered by the application, applicant contact information, and certification that the applicant's technology and equipment provide a treatment process that has been validated by a Board-approved process authority.

The Order authorizes the Board to collect certain information necessary for the administration of the Order. The information collected would only be used by authorized representatives of the AMS, including the AMS Specialty Crops Program regional and headquarters staff, and authorized employees of the Board. All proprietary information would be kept confidential in accordance with the Act and the Order.

The proposed request for new information collection under the Order is as follows:

Custom Processor Application

Estimate of Burden: Public reporting burden for this collection of information is estimated to be an average of 0.5 hours per response.

Respondents: Nut processors located within the Order's area of production.

Estimated Number of Respondents: 25.

Estimated Number of Responses per Respondent: 1.

Estimated Total Annual Responses: 25.

Estimated Total Annual Burden on Respondents: 12.5 hours.

Comments are invited on: (1) whether the proposed collection of information is necessary for the proper performance of the functions of the Agency, including whether the information will have practical utility; (2) the accuracy of the Agency's estimate of the burden of the proposed collection of information, including the validity of the methodology and assumptions used; (3) ways to enhance the quality, utility, and clarity of the information to be collected; and (4) ways to minimize the burden of the collection of information on those who are to respond, including the use of appropriate automated, electronic, mechanical, or other technological collection techniques or other forms of information technology.

Comments should reference OMB No. 0581–NEW and the marketing order for almonds grown in California. Comments should be sent to AMS in care of the Docket Clerk at the previously mentioned address or at *https://www.regulations.gov.*

All responses to this notice will be summarized and included in the request for OMB approval. All comments received will become a matter of public record and will be available for public inspection during regular business hours at the address of the Docket Clerk or at *https://www.regulations.gov.*

If this proposed rule is finalized, this information collection will be merged with the forms currently approved under OMB No. 0581–0242 (Almond Salmonella).

As with all Federal marketing order programs, reports and forms are periodically reviewed to reduce information requirements and duplication by industry and public sector agencies. AMS has not identified any relevant Federal rules that duplicate, overlap, or conflict with this proposed rule.

AMS is committed to complying with the E-Government Act, to promote the use of the internet and other information technologies to provide increased opportunities for citizen access to Government information and services, and for other purposes.

Further, the Board's meetings are widely publicized throughout the California almond industry, and all interested persons are invited to attend the meetings and participate in Board deliberations on all issues. Like all Board meetings, the December 7, 2020, June 17, 2021, and September 30, 2022, meetings were open to the public, and all entities, both large and small, were able to express their views on the proposed changes. Also, the Board has several appointed committees to review certain issues and make recommendations to the Board. The Board's Almond Quality, Food Safety, and Services Committee met several times in 2019 and discussed these changes in detail. Those meetings were also public meetings, and both large and small entities were able to participate and express their views. Finally, interested persons are invited to submit comments on this proposed rule, including the regulatory and information collection impacts of this action on small businesses.

A small business guide on complying with fruit, vegetable, and specialty crop marketing agreements and orders may be viewed at: *https://www.ams.usda.gov/rules-regulations/moa/small-businesses.* Any questions about the compliance guide should be sent to Richard Lower at the previously mentioned address in the **FOR FURTHER INFORMATION CONTACT** section.

After consideration of all relevant material presented, including the information and recommendations submitted by the Board and other available information, AMS has determined that this proposed rule is consistent with and will effectuate the purposes of the Act.

A 60-day comment period is provided to allow interested persons to respond to this proposal. All written comments timely received will be considered before a final determination is made on this matter.

List of Subjects in 7 CFR Part 981

Marketing agreements, Nuts, Reporting and recordkeeping requirements.

For the reasons set forth in the preamble, the Agricultural Marketing Service proposes to amend 7 CFR part 981 as follows:

PART 981—ALMONDS GROWN IN CALIFORNIA

■ 1. The authority citation for 7 CFR part 981 continues to read as follows:

Authority: 7 U.S.C. 601–674.

■ 2. Amend § 981.442 by:
■ a. Revising paragraphs (a)(1), (a)(4)(i), and (a)(5);
■ b. Revising the introductory text of paragraph (b);
■ c. Revising paragraphs (b)(2), (b)(3)(i) and (v), and (b)(4)(i) and (v);
■ d. Revising the introductory text of paragraph (b)(6)(i); and
■ e. Revising paragraphs (b)(6)(i)(A), (C), and (D).

The revisions read as follows:

§ 981.442 Quality control.

(a) * * *

(1) *Sampling.* Each handler shall cause a representative sample of almonds to be drawn from each lot of any variety received from any incoming source. The sample shall be drawn before inedible kernels are removed from the lot after hulling/shelling, or before the lot is processed or stored by the handler. For receipts at premises with mechanical sampling equipment and under contracts providing for payment by the handler to the grower for sound meat content, samples shall be drawn by the handler in a manner acceptable to the Board and the inspection agency. The inspection agency shall make periodic checks of the mechanical sampling procedures. For all other receipts, including but not limited to field examination and purchase receipts, accumulations purchased for cash at the handler's door or from an accumulator, or almonds of the handler's own production, sampling shall be conducted or monitored by the inspection agency in a manner acceptable to the Board. All samples shall be bagged and identified in a manner acceptable to the Board and the inspection agency.

* * * * *

(4) * * *

(i) The weight of inedible kernels in excess of 2 percent of kernel weight reported to the Board of any variety received by a handler shall constitute that handler's disposition obligation. For any almonds sold inshell, the weight may be reported to the Board and that disposition obligation for that variety reduced proportionately.

* * * * *

(5) *Meeting the disposition obligation.* Each handler shall meet its disposition obligation by delivering packer pickouts, kernels rejected in blanching, pieces of kernels, meal accumulated in manufacturing, or other material, to Board-approved accepted users, which can include, but is not limited to, crushers, feed manufacturers, feeders, or dealers in nut wastes, located within the production area. Inedible kernels, foreign material, and other defects sorted from edible kernels by off-site cleaning facilities may be used towards that handler's disposition obligation or destroyed. Handlers shall notify the Board at least 72 hours prior to delivery of product to an off-site cleaning facility or accepted user location: *Provided,* That the Board or its employees may lessen this notification time whenever it determines that the 72-hour requirement is impracticable. The Board may supervise deliveries at its option. In the case of a handler having an annual total obligation of less than 1,000 pounds, delivery may be to the Board in lieu of an accepted user, in which case the Board would certify the disposition lot and report the results to the USDA. For dispositions by handlers with mechanical sampling equipment, samples may be drawn by the handler in a manner acceptable to the Board and the inspection agency. For all other dispositions, samples shall be drawn by or under supervision of the inspection agency. Upon approval by the Board and the inspection agency, sampling may be accomplished at the accepted user's destination. The edible and inedible almond meat content of each delivery shall be determined by the inspection agency and reported by the inspection agency to the Board and the handler. The handler's disposition obligation will be credited upon satisfactory completion of ABC Form 8. ABC Form 8, Part A, is filled out by the handler, and Part B by the accepted user. At least 50 percent of a handler's total crop year inedible disposition obligation shall be satisfied with dispositions consisting of inedible kernels as defined in § 981.408: *Provided,* That this 50 percent requirement shall not apply to handlers with total annual obligations of less than 1,000 pounds. Each handler's disposition obligation shall be satisfied when the almond meat content of the material delivered to accepted users equals the disposition obligation, but no later than September 30 succeeding the crop year in which the obligation was incurred. Almond meal can be used for meeting the non-inedible portion of the obligation. Meal content shall be determined in a manner acceptable to the Board.

* * * * *

(b) *Outgoing.* Pursuant to § 981.42(b), and except as provided in § 981.13 and in paragraph (b)(6) of this section, handlers shall subject their almonds to a treatment process or processes prior to shipment to reduce potential *Salmonella* bacteria contamination in accordance with the provisions of this section. Temporary transfer by a handler to an off-site cleaning facility is not considered a shipment under this section. Handlers may utilize off-site cleaning facilities within the production area, on record with the Board, to provide sorting services to separate inedible kernels, foreign material, and other defects from edible kernels. Product sent by a handler to an off-site cleaning facility is considered a temporary transfer, with ownership maintained by the handler, and accountability required for all product fractions and handler obligations pursuant to § 981.42.

* * * * *

(2) *On-site versus off-site treatment.* Handlers shall subject almonds to a treatment process or processes prior to shipment either at their handling facility (on-site) or a custom processor (defined as a Board-approved off-site treatment facility located within the production area subject to the provisions of paragraph (b)(4)(v) of this section). Transportation of almonds by a handler to a custom processor shall not be deemed a shipment. A handler with an on-site treatment process or processes may use such facility to act as a custom processor for other handlers.

(3) * * *

(i) Validation means that the treatment technology and equipment have been demonstrated to achieve in total a minimum 4-log reduction of *Salmonella* bacteria in almonds. Validation data prepared by a Board-approved process authority must be submitted to the Board, and accepted by the TERP, for each piece of equipment used to treat almonds prior to its use under the program.

* * * * *

(v) The TERP, in coordination with the Board, may revoke any approval for cause. The Board shall notify the process authority in writing of the reasons for revoking the approval. Should the process authority disagree with the decision, they may appeal the decision in writing to the Board, and ultimately to USDA. A process authority whose approval has been revoked must submit a new application to the TERP and await approval.

(4) * * *

(i) By May 31, each handler shall submit to the Board a Handler Treatment Plan (Treatment Plan) for the upcoming crop year. A Treatment Plan shall describe how a handler plans to treat his or her almonds and must address specific parameters as outlined by the Board for the handler to ship almonds. Such plan shall be reviewed by the Board, in conjunction with the inspection agency, to ensure it is complete and can be verified, and be approved by the Board. Almonds sent by a handler for treatment at a custom processing facility affiliated with another handler shall be subject to the approved Treatment Plan utilized at that facility. Handlers shall follow their own approved Treatment Plans for almonds sent to custom processors that are not affiliated with another handler.

* * * * *

(v) Custom processors shall provide access to the inspection agency and Board staff for verification of treatment and review of treatment records. Custom processors shall utilize technologies that have been determined to achieve, in total, a minimum 4-log reduction of Salmonella bacteria in almonds, pursuant to a letter of recommendation issued by FDA or accepted by the TERP. Custom processors must submit a Custom Processor Application, ABC Form XX, to the Board annually by July 31. A custom processor who submits a timely application, and utilizes a treatment process or processes that has been validated by a Board-approved process authority and approved by the Board in conjunction with the TERP, shall be approved by the Board for handler use. The Board may revoke any such approval for cause. The Board shall notify the custom processor of the reasons for revoking the approval. Should the custom processor disagree with the Board's decision, it may appeal the decision in writing to USDA. Handlers may treat their almonds only at custom processor treatment facilities that have been approved by the Board.

* * * * *

(6) * * *

(i) Handlers may ship untreated almonds for further processing directly to manufacturers located within the U.S., Canada, or Mexico. This program shall be termed the Direct Verifiable (DV) program. Handlers may only ship untreated almonds to manufacturers who have submitted ABC Form No. 52, ''Application for Direct Verifiable (DV) Program for Further Processing of Untreated Almonds,'' and have been approved by the Board. Such almonds must be shipped directly to approved manufacturing locations, as specified on Form No. 52. Such manufacturers (DV Users) must submit an initial Form No. 52 to the Board for review and approval in conjunction with the TERP. Should the applicant disagree with the Board's decision concerning approval, it may appeal the decision in writing to the Board, and ultimately to USDA. For subsequent crop years, approved DV Users with no changes to their initial application must send the Board a letter, signed and dated, indicating that there are no changes to the application the Board has on file. Approved DV Users desiring to make changes to their approved application must resubmit Form No. 52 to the Board for approval. The TERP, in coordination with the Board, may revoke any approval for cause. The Board shall notify the DV User in writing of the reasons for revoking the approval. Should the DV User disagree with the decision, it may appeal the decision in writing to the Board, and ultimately to USDA. A DV User whose approval has been revoked must submit a new application to the Board and await approval. The Board shall issue a DV User code to an approved DV User. Handlers must reference such code in all documentation accompanying the lot and identify each container of such almonds with the term ''unpasteurized.'' Such lettering shall be on one outside principal display panel, at least ½ inch in height, clear and legible. If a third party is involved in the transaction, the handler must provide sufficient documentation to the Board to track the shipment from the handler's facility to the approved DV user. While a third party may be involved in such transactions, shipments to a third party and then to a manufacturing location are not permitted under the DV program. Approved DV Users shall:

(A) Subject such almonds to a treatment process or processes using technologies that achieve in total a minimum 4-log reduction of *Salmonella* bacteria as determined by the FDA or established by a process authority accepted by the TERP, in accordance with and subject to the provisions and procedures of paragraph (b)(3) of this section. Establish means that the treatment process and protocol have been evaluated to ensure the technology's ability to deliver a lethal treatment for *Salmonella* bacteria in almonds to achieve a minimum 4-log reduction;

* * * * *

(C) Have their treatment technology and equipment validated by a Board-approved process authority, and accepted by the TERP. Documentation must be provided with their DV application to verify that their treatment technology and equipment have been validated by a Board-approved process authority. Such documentation shall be sufficient to demonstrate that the treatment processes and equipment achieve a 4-log reduction in *Salmonella* bacteria. Treatment technology and equipment that have been modified to a point where operating parameters such as time, temperature, or volume change, shall be revalidated;

(D) Have their technology and procedures verified by a Board-approved DV auditor to ensure they are being applied appropriately. A DV auditor may not be an employee of the manufacturer that they are auditing. A DV auditor may not be the same individual who conducted the process validation accepted by the TERP for the equipment being audited. DV auditors must submit a report to the Board after conducting each audit. DV auditors must submit an initial application to the Board on ABC Form No. 53, ''Application for Direct Verifiable (DV) Program Auditors,'' and be approved by the Board in coordination with the TERP. Should the applicant disagree with the decision concerning approval, they may appeal the decision in writing to the Board, and ultimately to USDA. For subsequent crop years, approved DV auditors with no changes to their initial application must send the Board a letter, signed and dated, indicating that there are no changes to the application the Board has on file. Approved DV auditors whose status has changed must submit a new application. The Board, in coordination with the TERP, may revoke any approval for cause. The Board shall notify the DV auditor in writing of the reasons for revoking the approval. Should the DV auditor disagree with the decision to revoke, it may appeal the decision in writing to the Board, and ultimately to USDA. A DV auditor whose approval has been revoked must submit a new application to the Board and await approval;

* * * * *

■ 3. Revise § 981.450 to read as follows:

§ 981.450 Exempt dispositions.

As provided in § 981.50, any handler disposing of almonds for crushing into oil, or for animal feed, may have the kernel weight of these almonds excluded from their program obligations, so long as:

(a) The handler qualifies as, or delivers such almonds to, a Board-approved accepted user;

(b) Each delivery is made directly to the accepted user by June 30 of each crop year; and

(c) Each delivery is certified to the Board by the handler on ABC Form 8.

§§ 981.466 and 981.467 [Stayed]

■ 4. Sections 981.466 and 981.467 are stayed indefinitely.

■ 5. Revise § 981.481 to read as follows:

§ 981.481 Interest and late payment charges.

(a) Pursuant to § 981.81(e), the Board shall impose an interest charge on any handler whose assessment payment has not been received in the Board's office within 30 days of the invoice date shown on the handler's statement, or the envelope containing the payment has not been legibly postmarked by the U.S. Postal Service or some other verifiable delivery tracking system, as having been remitted within 30 days of the invoice date. The interest charge shall be a rate of one and a half percent per month and shall be applied to the unpaid assessment balance for the number of days all or any part of the unpaid balance is delinquent beyond the 30-day payment period.

(b) In addition to the interest charge specified in paragraph (a) of this section, the Board shall impose a late payment charge on any handler whose payment has not been received in the Board's office, or the envelope containing the payment legibly postmarked by the U.S. Postal Service or some other verifiable delivery tracking system, within 60 days of the invoice date. The late payment charge shall be 10 percent of the unpaid balance.

Erin Morris,

Associate Administrator, Agricultural Marketing Service.

[FR Doc. 2023–08852 Filed 4–26–23; 8:45 am]

BILLING CODE P

DEPARTMENT OF HOMELAND SECURITY

Coast Guard

33 CFR Part 117

[Docket No. USCG–2023–0184]

RIN 1625–AA09

Drawbridge Operation Regulation; Maumee River, Toledo, OH

AGENCY: Coast Guard, DHS.

ACTION: Notice of proposed rulemaking.

SUMMARY: The Coast Guard proposes to modify the operating schedule that governs the CSX Railroad Bridge, mile 1.07, the Wheeling and Lake Erie Railroad Bridge, mile 1.80, the Craig Memorial Bridge, mile 3.30, the Martin Luther King Jr. Memorial Bridge, mile 4.30, and the Norfolk Southern Railroad Bridge, mile 5.76, all over the Maumee River at Toledo, Ohio. The original regulation was published in 1986 and has been amended over the years but a full review of the regulations for the waterway has not been completed. The current regulations are cumbersome, difficult to understand, and cause confusion to recreational vessels and some drawtenders. We invite your comments on this proposed rulemaking.

DATES: Comments and related material must reach the Coast Guard on or before June 26, 2023.

ADDRESSES: You may submit comments identified by docket number USCG–2023–0184 using Federal Decision-Making Portal at *https://www.regulations.gov.*

See the ''Public Participation and Request for Comments'' portion of the **SUPPLEMENTARY INFORMATION** section below for instructions on submitting comments.

FOR FURTHER INFORMATION CONTACT: If you have questions on this proposed rule, call or email If you have questions on this temporary final rule, call or email Mr. Lee D. Soule, Bridge Management Specialist, Ninth Coast Guard District; telephone 216–902–6085, email *Lee.D.Soule@uscg.mil.*

SUPPLEMENTARY INFORMATION:

I. Table of Abbreviations

CFR Code of Federal Regulations
CRSTF Cuyahoga River Safety Task Force
DHS Department of Homeland Security
FR Federal Register
IGLD International Great Lakes Datum of 1985
LWD Low Water Datum based on IGLD85
OMB Office of Management and Budget
ODOT Ohio Department of Transportation
PAWSA Ports and Waterway Safety Assessment
TMMS Traffic Monitoring Management System
NPRM Notice of Proposed Rulemaking
§ Section
U.S.C. United States Code

II. Background, Purpose and Legal Basis

The Maumee River is formed at the confluence of the St. Joseph and St. Mary's Rivers in the northeast corner of Fort Wayne, Indiana and flows 137 miles to Lake Erie. The Maumee River was designated an Ohio State Scenic River on July 18, 1974. The entire river was considered a navigable waterway until the maintenance of the locks were discontinued in 1913 and the head of navigation just past the US 20/Perrysburg-Maumee Bridge at mile 14.72 was established. The rest of the Maumee River continues to be in an advance approval waterway jurisdiction. The Maumee River watershed is the largest of any river feeding the Great Lakes and supplies five percent of Lake Erie's water.

The mouth of the river at Toledo and Lake Erie is wide and supports considerable international and domestic commercial traffic, including oil, grain, and coal *cargoes.* Powered and unpowered recreational vessels utilize the entire river; however, the rapids at mile 15 are unpassable without an operable lock system.

The Maumee River from the head of navigation to the mouth of the river is crossed by ten bridges, four of which are movable. The vertical clearance of all bridges on the Maumee River are based on LWD.

The CSX Railroad Bridge, mile 1.07, is a swing bridge with a horizontal clearance of 143-feet in both left and right draws and a vertical clearance of 22-feet in the closed position and an unlimited clearance in the open position.

The Wheeling and Lake Erie Railroad Bridge, mile 1.80, is a swing bridge with a horizontal clearance of 134-feet in both left and right draws and a vertical clearance of 20-feet in the closed position and an unlimited clearance in the open position.

The Craig Memorial Bridge, mile 3.30, is a double leaf bascule bridge, that provides a horizontal clearance of 200-feet with a minimum vertical clearance of 34-feet with a vertical clearance of 44-feet available in the center 31-feet while in the closed position and an unlimited clearance in the open position.

The Martin Luther King Jr. Memorial Bridge (prior to 1989, the Cherry Street Bridge), mile 4.30, is a double leaf bascule bridge, that provides a horizontal clearance of 200-feet with a minimum vertical clearance of 34-feet with a vertical clearance of 44-feet available in the center 31-feet while in the closed position and an unlimited clearance in the open position. The Martin Luther King Jr. Memorial Bridge is a Scherzer rolling lift bridge built in 1914 and is eligible for listing on the national register of historic places. It was rehabilitated in 2002 with an adverse effect. All of the movable bridge's superstructure and operating systems were replaced with a modern bascule span. It no longer conveys the technological significance of the Scherzer design due to loss of integrity of design and materials. The arches and piers are the only original fabrication remaining from 1914.

The Norfolk Southern Railroad Bridge, mile 5.76, is a swing bridge with a horizontal clearance of 115-feet in both left and right draws and a vertical clearance of 17-feet in the closed position and an unlimited clearance in the open position.

The CSX Railroad Bridge, mile 11.38, was a swing bridge with a horizontal clearance of 110-feet in both left and right draws and a vertical clearance of 53-feet in the closed position and an unlimited clearance in the open position. The bridge was allowed to remain closed by regulation when the upriver ship building facility closed. The bridge was removed in its entirety and at the District Commander's satisfaction in 2019.

On November 3, 1986, we published (51 FR 39858) in the **Federal Register** new regulations for the Maumee River's movable bridges under 33 CFR 117.855 (Maumee River) that included several schedules for the bridges, the new schedules were intended to ease the travel of motorists across the bridges while still allowing recreational and commercial commerce to travel the river.

Since 1986, operators of the recreational vessels using the large Pier 75 marina near mile 7 have claimed that the Norfolk Southern Railroad Bridge, mile 5.76, has repeatedly refused to open for recreational vessels. Influenced by Norfolk Southern's failure to open for recreational vessels, marina owners and clients moved to a new marina near mile 1.07, eliminating most of the recreational vessel traffic in that part of the river. The Brennen Marina near mile 4.2 was relocated to the former Harrison Marina at mile 1. A smaller marina has been built near mile 3.30, but all the vessels in this marina can make it through all the bridges, except for the Norfolk Southern Railroad Bridge at mile 5.76, without an opening.

The current regulations governing the five Toledo-area moveable bridges are inconsistent and difficult to understand.

III. Discussion of Proposed Rule

We propose to require a 12-hour advance notice from December 15 through March 31. Each bridge owner will be responsible to provide to the District Commander an appropriate phone number to be advertised to the mariners in the Local Notice to Mariners and would be required to be included in the requirements of 33 CFR 117.55.

After careful review of the annual average vehicle counts at each highway bridge, we propose the hourly restrictions imposed on the recreational vessels be dismissed due to the reduction in vehicle crossing numbers as reported by the TMMS website hosted by ODOT and the reduction in recreational vessels with an air draft that would require bridge openings.

In the past three years we have received 66 complaints of delays at three of the drawbridges over the Maumee River. These complaints include: three written complaints against the Craig memorial Bridge, mile 3.30; thirty-one written complaints against the CSX Railroad Bridge, mile 1.07; and thirty-two written complaints against the Norfolk Southern Railroad Bridge, mile 5.76. Most of the complaints against the two railroad bridges have been about a lack of communications between the vessels and the drawtender. Often the miscommunications have been between the drawtender and the railroad dispatchers. To improve communications, we propose to require all drawbridges over the Maumee River to maintain and operate a VHF–FM Marine Radio and in addition to the Marine Radio the Railroad Bridges at mile 1.07 and mile 5.76 will maintain and operate a telephone with a correct number to be placed on signage at the bridge.

IV. Regulatory Analyses

We developed this proposed rule after considering numerous statutes and Executive Orders related to rulemaking. Below we summarize our analyses based on these statutes and Executive Orders.

A. Regulatory Planning and Review

Executive Orders 12866 and 13563 direct agencies to assess the costs and benefits of available regulatory alternatives and, if regulation is necessary, to select regulatory approaches that maximize net benefits. This NPRM has not been designated a ''significant regulatory action,'' under Executive Order 12866. Accordingly, the NPRM has not been reviewed by the Office of Management and Budget (OMB).

This regulatory action determination is based on the ability that vessels can still transit the bridge given advanced notice and that most restrictions against vessels have been removed.

B. Impact on Small Entities

The Regulatory Flexibility Act of 1980 (RFA), 5 U.S.C. 601–612, as amended, requires Federal agencies to consider the potential impact of regulations on small entities during rulemaking. The term ''small entities'' comprises small businesses, not-for-profit organizations that are independently owned and operated and are not dominant in their fields, and governmental jurisdictions with populations of less than 50,000. The Coast Guard certifies under 5 U.S.C. 605(b) that this proposed rule would not have a significant economic impact on a substantial number of small entities.

While some owners or operators of vessels intending to transit the bridge may be small entities, for the reasons stated in section IV.A above this proposed rule would not have a significant economic impact on any vessel owner or operator.

If you think that your business, organization, or governmental jurisdiction qualifies as a small entity and that this rule would have a significant economic impact on it, please submit a comment (see **ADDRESSES**) explaining why you think it qualifies and how and to what degree this rule would economically affect it.

Under section 213(a) of the Small Business Regulatory Enforcement Fairness Act of 1996 (Pub. L. 104–121), we want to assist small entities in understanding this proposed rule. If the rule would affect your small business, organization, or governmental jurisdiction and you have questions concerning its provisions or options for compliance, please contact the person listed in the **FOR FURTHER INFORMATION CONTACT** section. The Coast Guard will not retaliate against small entities that question or complain about this proposed rule or any policy or action of the Coast Guard.

C. Collection of Information

This proposed rule would call for no new collection of information under the Paperwork Reduction Act of 1995 (44 U.S.C. 3501–3520.).

D. Federalism and Indian Tribal Governments

A rule has implications for federalism under Executive Order 13132 (Federalism), if it has a substantial direct effect on the States, on the relationship between the National Government and the States, or on the distribution of power and responsibilities among the various levels of government. We have analyzed this proposed rule under that Order and have determined that it is consistent with the fundamental federalism principles and preemption requirements described in Executive Order 13132.

Also, this proposed rule does not have tribal implications under Executive Order 13175 (Consultation and Coordination with Indian Tribal Governments) because it would not have a substantial direct effect on one or more Indian tribes, on the relationship between the Federal Government and Indian tribes, or on the distribution of power and responsibilities between the Federal Government and Indian tribes. If you believe this proposed rule has implications for federalism or Indian tribes, please contact the person listed in the **FOR FURTHER INFORMATION CONTACT** section.

E. Unfunded Mandates Reform Act

The Unfunded Mandates Reform Act of 1995 (2 U.S.C. 1531–1538) requires Federal agencies to assess the effects of their discretionary regulatory actions. In particular, the Act addresses actions that may result in the expenditure by a State, local, or tribal government, in the aggregate, or by the private sector of $100,000,000 (adjusted for inflation) or more in any one year. Though this proposed rule will not result in such an expenditure, we do discuss the effects of this proposed rule elsewhere in this preamble.

F. Environment

We have analyzed this rule under Department of Homeland Security Management Directive 023–01, Rev.1, associated implementing instructions, and Environmental Planning Policy COMDTINST 5090.1 (series), which guide the Coast Guard in complying with the National Environmental Policy Act of 1969 (NEPA)(42 U.S.C. 4321–4370f). The Coast Guard has determined that this action is one of a category of actions that do not individually or cumulatively have a significant effect on the human environment. This proposed rule promulgates the operating regulations or procedures for drawbridges. Normally such actions are categorically excluded from further review, under paragraph L49, of Chapter 3, Table 3–1 of the U.S. Coast Guard Environmental Planning Implementation Procedures.

Neither a Record of Environmental Consideration nor a Memorandum for the Record are required for this rule. We seek any comments or information that may lead to the discovery of a significant environmental impact from this proposed rule.

V. Public Participation and Request for Comments

We view public participation as essential to effective rulemaking and will consider all comments and material received during the comment period. Your comment can help shape the outcome of this rulemaking. If you submit a comment, please include the docket number for this rulemaking, indicate the specific section of this document to which each comment applies, and provide a reason for each suggestion or recommendation.

Submitting comments. We encourage you to submit comments through the Federal Decision-Making Portal at *https://www.regulations.gov.* To do so, go to *https://www.regulations.gov,* type USCG–2023–0184 in the search box and click ''Search.'' Next, look for this document in the Search Results column, and click on it. Then click on the Comment option. If your material cannot be submitted using *https://www.regulations.gov,* contact the person in the **FOR FURTHER INFORMATION CONTACT** section of this document for alternate instructions.

Viewing material in docket. To view documents mentioned in this proposed rule as being available in the docket, find the docket as described in the previous paragraph, and then select ''Supporting & Related Material'' in the Document Type column. Public comments will also be placed in our online docket and can be viewed by following instructions on the *https://www.regulations.gov* Frequently Asked Questions web page. We review all comments received, but we will only post comments that address the topic of the proposed rule. We may choose not to post off-topic, inappropriate, or duplicate comments that we receive. Additionally, if you go to the online docket and sign up for email alerts, you will be notified when comments are posted, or a final rule is published of any posting or updates to the docket.

We accept anonymous comments. Comments we post to *https://www.regulations.gov* will include any personal information you have provided. For more about privacy and submissions in response to this document, see DHS's eRulemaking System of Records notice (85 FR 14226, March 11, 2020).

List of Subjects in 33 CFR Part 117

Bridges.

For the reasons discussed in the preamble, the Coast Guard proposes to amend 33 CFR part 117 as follows:

PART 117—DRAWBRIDGE OPERATION REGULATIONS

■ 1. The authority citation for part 117 continues to read as follows:

Authority: 33 U.S.C. 499; 33 CFR 1.05–1; Department of Homeland Security Delegation No. 00170.1, Revision No. 01.3.

■ 2. Revise § 117.855 Maumee River to read as follows:

(a) The draw of the CSX Railroad Bridge, mile 1.07, will open on signal, except that from December 15 through March 31 the bridge will require at least 12-hours advance notice. The bridge will operate and maintain a VHF–FM Marine Radio and a telephone number.

(b) The draw of the Wheeling and Lake Erie Railroad Bridge, mile 1.80, will open on signal, except that from December 15 through March 31 the bridge will require at least 12-hours advance notice. The bridge will operate and maintain a VHF–FM Marine Radio.

(c) The draw of the Craig Memorial Bridge, mile 3.30, will open on signal, except that from December 15 through March 31 the bridge will require at least 12-hours advance notice. The bridge will operate and maintain a VHF–FM Marine Radio.

(d) The draw of the Martin Luther King Jr Memorial Bridge, mile 4.30, will open on signal, except that from December 15 through March 31 the bridge will require at least 12-hours advance notice. The bridge will operate and maintain a VHF–FM Marine Radio.

(e) The draw of the Norfolk Southern Railroad Bridge, mile 5.76, will open on signal, except that from December 15 through March 31 the bridge will require at least 12-hours advance notice. The bridge will operate and maintain a VHF–FM Marine Radio and a telephone number.

M.J. Johnston,

Rear Admiral, U.S. Coast Guard, Commander, Ninth Coast Guard District.

[FR Doc. 2023–08863 Filed 4–26–23; 8:45 am]

BILLING CODE 9110–04–P

ENVIRONMENTAL PROTECTION AGENCY

40 CFR Part 63

[EPA–HQ–OAR–2022–0787; FRL–9846–01–OAR]

RIN 2060–AV80

National Emission Standards for Hazardous Air Pollutants: Ethylene Production, Miscellaneous Organic Chemical Manufacturing, Organic Liquids Distribution (Non-Gasoline), and Petroleum Refineries Reconsideration

AGENCY: Environmental Protection Agency (EPA).

ACTION: Proposed rule; reconsideration of final rule.

SUMMARY: On July 6, 2020, the U.S. Environmental Protection Agency (EPA) finalized the residual risk and technology review (RTR) conducted for the Ethylene Production source category, which is part of the Generic Maximum Achievable Control Technology (GMACT) Standards National Emission Standards for Hazardous Air Pollutants (NESHAP); on July 7, 2020, the EPA finalized the RTR conducted for the Organic Liquids Distribution (Non-Gasoline) NESHAP; and on August 12, 2020, the EPA finalized the RTR conducted for the Miscellaneous Organic Chemical Manufacturing NESHAP. Amendments to the Petroleum Refineries NESHAP were most recently finalized on February 4, 2020. Subsequently, the EPA received and granted various petitions for reconsideration on these NESHAP for, among other things, the provisions related to the work practice standards for pressure relief devices (PRDs), emergency flaring, and degassing of floating roof storage vessels. In response to the petitions, the EPA is proposing amendments to the work practice standards for PRDs, emergency flaring, and degassing of floating roof storage vessels. In addition, the EPA is proposing other technical corrections and clarifications for each of the rules. The EPA will not respond to comments addressing any other issues or any other provisions of the final rule not specifically addressed in this proposed rulemaking.

DATES:

Comments. Comments must be received on or before June 12, 2023. Under the Paperwork Reduction Act (PRA), comments on the information collection provisions are best assured of consideration if the Office of Management and Budget (OMB)

receives a copy of your comments on or before May 30, 2023.

Public hearing. If anyone contacts us requesting a public hearing on or before May 2, 2023, we will hold a virtual public hearing. See **SUPPLEMENTARY INFORMATION** for information on requesting and registering for a public hearing.

ADDRESSES: You may send comments, identified by Docket ID No. EPA–HQ–OAR–2022–0787, by any of the following methods:

Federal eRulemaking Portal: https://www.regulations.gov/ (our preferred method). Follow the online instructions for submitting comments.

Email: a-and-r-docket@epa.gov. Include Docket ID No. EPA–HQ–OAR–2022–0787 in the subject line of the message.

Fax: (202) 566–9744. Attention Docket ID No. EPA–HQ–OAR–2022–0787.

Mail: U.S. Environmental Protection Agency, EPA Docket Center, Docket ID No. EPA–HQ–OAR–2022–0787, Mail Code 28221T, 1200 Pennsylvania Avenue NW, Washington, DC 20460.

Hand/Courier Delivery: EPA Docket Center, WJC West Building, Room 3334, 1301 Constitution Avenue NW, Washington, DC 20004. The Docket Center's hours of operation are 8:30 a.m.–4:30 p.m., Monday–Friday (except Federal holidays).

Instructions: All submissions received must include the Docket ID No. for this rulemaking. Comments received may be posted without change to *https://www.regulations.gov/,* including any personal information provided. For detailed instructions on sending comments and additional information on the rulemaking process, see the **SUPPLEMENTARY INFORMATION** section of this document. Out of an abundance of caution for members of the public and our staff, the EPA Docket Center and Reading Room are open to the public by appointment only. Our Docket Center staff also continues to provide remote customer service via email, phone, and webform. Hand deliveries and couriers may be received by scheduled appointment only. For further information on EPA Docket Center services and the current status, please visit us online at *https://www.epa.gov/dockets.*

FOR FURTHER INFORMATION CONTACT: For questions about this proposed action, contact Ms. Angie Carey, Sector Policies and Programs Division (E143–01), Office of Air Quality Planning and Standards, U.S. Environmental Protection Agency, Research Triangle Park, North Carolina 27711; telephone number: (919) 541–2187; fax number: (919) 541–0516; and email address: *carey.angela@epa.gov.*

SUPPLEMENTARY INFORMATION:

Participation in virtual public hearing. To request a virtual hearing, contact the public hearing team at (888) 372–8699 or by email at *SPPDpublichearing@epa.gov.* If requested, the hearing will be held via virtual platform on May 12, 2023. The hearing will convene at 10 a.m., Eastern Time (ET) and conclude at 5 p.m. ET. The EPA may close a session 15 minutes after the last pre-registered speaker has testified if there are not additional speakers. The EPA will announce further details on the virtual public hearing website at *https://www.epa.gov/stationary-sources-air-pollution/petroleum-refinery-sector-rule-risk-and-technology-review-and-new.*

If a public hearing is requested, the EPA will begin pre-registering speakers for the hearing no later than 1 business day after a request has been received. To register to speak at the virtual hearing, please use the online registration form available at *https://www.epa.gov/stationary-sources-air-pollution/petroleum-refinery-sector-rule-risk-and-technology-review-and-new* or contact the public hearing team at (888) 372–8699 or by email at *SPPDpublichearing@epa.gov.* The last day to pre-register to speak at the hearing will be May 9, 2023. Prior to the hearing, the EPA will post a general agenda that will list pre-registered speakers in approximate order at *https://www.epa.gov/stationary-sources-air-pollution/petroleum-refinery-sector-rule-risk-and-technology-review-and-new.*

The EPA will make every effort to follow the schedule as closely as possible on the day of the hearing; however, please plan for the hearing to run either ahead of schedule or behind schedule.

Each commenter will have 4 minutes to provide oral testimony. The EPA encourages commenters to submit a copy of their oral testimony as written comments to the rulemaking docket.

The EPA may ask clarifying questions during the oral presentations but will not respond to the presentations at that time. Written statements and supporting information submitted during the comment period will be considered with the same weight as oral testimony and supporting information presented at the public hearing.

Please note that any updates made to any aspect of the hearing will be posted online at *https://www.epa.gov/stationary-sources-air-pollution/petroleum-refinery-sector-rule-risk-and-technology-review-and-new.* While the EPA expects the hearing to go forward as set forth above, please monitor our website or contact the public hearing team at (888) 372–8699 or by email at *SPPDpublichearing@epa.gov* to determine if there are any updates. The EPA does not intend to publish a document in the **Federal Register** announcing updates.

If you require the services of a translator or a special accommodation such as audio description, please pre-register for the hearing with the public hearing team and describe your needs by May 4, 2023. The EPA may not be able to arrange accommodations without advance notice.

Docket. The EPA has established a docket for this rulemaking under Docket ID No. EPA–HQ–OAR–2022–0787. All documents in the docket are listed in *https://www.regulations.gov/.* Although listed, some information is not publicly available, *e.g.,* Confidential Business Information (CBI) or other information whose disclosure is restricted by statute. Certain other material, such as copyrighted material, is not placed on the internet and will be publicly available only in hard copy. With the exception of such material, publicly available docket materials are available electronically in *https://www.regulations.gov/* or in hard copy at the EPA Docket Center, Room 3334, WJC West Building, 1301 Constitution Avenue NW, Washington, DC. The Public Reading Room is open from 8:30 a.m. to 4:30 p.m., Monday through Friday, excluding legal holidays. The telephone number for the Public Reading Room is (202) 566–1744, and the telephone number for the EPA Docket Center is (202) 566–1742.

Instructions. Direct your comments to Docket ID No. EPA–HQ–OAR–2022–0787. The EPA's policy is that all comments received will be included in the public docket without change and may be made available online at *https://www.regulations.gov/,* including any personal information provided, unless the comment includes information claimed to be CBI or other information whose disclosure is restricted by statute. Do not submit electronically to *https://www.regulations.gov/* any information that you consider to be CBI or other information whose disclosure is restricted by statue. This type of information should be submitted as discussed below.

The EPA may publish any comment received to its public docket. Multimedia submissions (audio, video, *etc.*) must be accompanied by a written comment. The written comment is considered the official comment and

should include discussion of all points you wish to make. The EPA will generally not consider comments or comment contents located outside of the primary submission (*i.e.,* on the Web, cloud, or other file sharing system). For additional submission methods, the full EPA public comment policy, information about CBI or multimedia submissions, and general guidance on making effective comments, please visit *https://www.epa.gov/dockets/commenting-epa-dockets.*

The *https://www.regulations.gov/* website allows you to submit your comment anonymously, which means the EPA will not know your identity or contact information unless you provide it in the body of your comment. If you send an email comment directly to the EPA without going through *https://www.regulations.gov/,* your email address will be automatically captured and included as part of the comment that is placed in the public docket and made available on the internet. If you submit an electronic comment, the EPA recommends that you include your name and other contact information in the body of your comment and with any digital storage media you submit. If the EPA cannot read your comment due to technical difficulties and cannot contact you for clarification, the EPA may not be able to consider your comment. Electronic files should not include special characters or any form of encryption and should be free of any defects or viruses. For additional information about the EPA's public docket, visit the EPA Docket Center homepage at *https://www.epa.gov/dockets.*

Submitting CBI. Do not submit information containing CBI to the EPA through *https://www.regulations.gov/.* Clearly mark the part or all of the information that you claim to be CBI. For CBI information on any digital storage media that you mail to the EPA, note the docket ID, mark the outside of the digital storage media as CBI, and identify electronically within the digital storage media the specific information that is claimed as CBI. In addition to one complete version of the comments that includes information claimed as CBI, you must submit a copy of the comments that does not contain the information claimed as CBI directly to the public docket through the procedures outlined in *Instructions* above. If you submit any digital storage media that does not contain CBI, mark the outside of the digital storage media clearly that it does not contain CBI and note the docket ID. Information not marked as CBI will be included in the public docket and the EPA's electronic public docket without prior notice. Information marked as CBI will not be disclosed except in accordance with procedures set forth in 40 Code of Federal Regulations (CFR) part 2.

Our preferred method to receive CBI is for it to be transmitted electronically using email attachments, File Transfer Protocol (FTP), or other online file sharing services (*e.g.,* Dropbox, OneDrive, Google Drive). Electronic submissions must be transmitted directly to the Office of Air Quality Planning and Standards (OAQPS) CBI Office at the email address *oaqpscbi@epa.gov* and, as described above, should include clear CBI markings and note the docket ID. If assistance is needed with submitting large electronic files that exceed the file size limit for email attachments, and if you do not have your own file sharing service, please email *oaqpscbi@epa.gov* to request a file transfer link. If sending CBI information through the postal service, please send it to the following address: OAQPS Document Control Officer (C404–02), OAQPS, U.S. Environmental Protection Agency, Research Triangle Park, North Carolina 27711, Attention Docket ID No. EPA–HQ–OAR–2022–0787. The mailed CBI material should be double wrapped and clearly marked. Any CBI markings should not show through the outer envelope.

Preamble acronyms and abbreviations. Throughout this document the use of ''we,'' ''us,'' or ''our'' is intended to refer to the EPA. We use multiple acronyms and terms in this preamble. While this list may not be exhaustive, to ease the reading of this preamble and for reference purposes, the EPA defines the following terms and acronyms here: {* * * WILL NEED TO REVIEW LIST LATER IN THE PROCESS, DELETE UNUSED ACRONYMS, ADD OTHER COMMONLY USED ACRONYMS}

atm-m3/mol atmospheres per mole per cubic meter
ACC American Chemistry Council
AFPM American Fuels and Petrochemicals Manufacturers
AMEL alternative means of emissions limitation
API American Petroleum Institute
CAA Clean Air Act
CBI Confidential Business Information
CDX Central Data Exchange
CEDRI Compliance and Emissions Data Reporting Interface
CEMS continuous emission monitoring systems
CFR Code of Federal Regulations
EMACT Ethylene Production MACT
EPA Environmental Protection Agency
ET Eastern Time
GMACT Generic Maximum Achievable Control Technology
HAP hazardous air pollutant(s)
LEL lower explosive limit
MACT maximum achievable control technology
MCPU miscellaneous organic chemical manufacturing process unit
MON Miscellaneous Organic Chemical Manufacturing NESHAP
NESHAP national emission standards for hazardous air pollutants
NOCS notification of compliance status
NTTAA National Technology Transfer and Advancement Act
OLD Organic Liquids Distribution (Non-Gasoline)
OMB Office of Management and Budget
ppm parts per million
ppmw parts per million by weight
PRA Paperwork Reduction Act
PRD pressure relief device
RFA Regulatory Flexibility Act
RTR risk and technology review
SSM startup, shutdown, and malfunction
TCEQ Texas Commission on Environmental Quality
UMRA Unfunded Mandates Reform Act
U.S. United States

Organization of this document. The information in this preamble is organized as follows:

I. General Information
A. What is the source of authority for the reconsideration action?
B. Does this action apply to me?
C. Where can I get a copy of this document and other related information?
II. Background
A. Ethylene Production
B. Organic Liquids Distribution (Non-Gasoline)
C. Miscellaneous Organic Chemical Manufacturing
D. Petroleum Refineries
III. Reconsideration Issues, Request for Public Comments, and Other Proposed Changes
A. Pressure Relief Devices and Emergency Flaring
B. Storage Vessel Degassing
C. Other Technical Corrections and Clarifications
D. What compliance dates are we proposing?
IV. Summary of Cost, Environmental, and Economic Impacts
A. What are the affected facilities?
B. What are the air quality impacts?
C. What are the cost impacts?
D. What are the economic impacts?
E. What are the benefits?
F. What analysis of environmental justice did we conduct?
V. Statutory and Executive Order Reviews
A. Executive Order 12866: Regulatory Planning and Review and Executive Order 13563: Improving Regulation and Regulatory Review
B. Paperwork Reduction Act (PRA)
C. Regulatory Flexibility Act (RFA)
D. Unfunded Mandates Reform Act (UMRA)
E. Executive Order 13132: Federalism
F. Executive Order 13175: Consultation and Coordination With Indian Tribal Governments

G. Executive Order 13045: Protection of Children From Environmental Health Risks and Safety Risks
H. Executive Order 13211: Actions Concerning Regulations That Significantly Affect Energy Supply, Distribution, or Use
I. National Technology Transfer and Advancement Act (NTTAA) and 1 CFR Part 51
J. Executive Order 12898: Federal Actions To Address Environmental Justice in Minority Populations and Low-Income Populations

I. General Information

A. What is the source of authority for the reconsideration action?

The statutory authority for this action is provided by sections 112 and 307(d)(7)(B) of the Clean Air Act (CAA) (42 U.S.C. 7412 and 7607(d)(7)(B)).

B. Does this action apply to me?

Table 1 of this preamble lists the NESHAP and associated regulated industrial source categories that are the subject of this proposal. Table 1 is not intended to be exhaustive, but rather provides a guide for readers regarding the entities that this proposed action is likely to affect. The proposed standards, once promulgated, will be directly applicable to the affected sources. Federal, state, local, and tribal government entities would not be affected by this proposed action. Each of the source categories covered by this proposal were defined in the *Initial List of Categories of Sources Under Section 112(c)(1) of the Clean Air Act Amendments of 1990* (see 57 FR 31576; July 16, 1992) and *Documentation for Developing the Initial Source Category List, Final Report* (see EPA–450/3–91–030, July 1992), as well as the *National Emission Standards for Hazardous Air Pollutants; Revision of Initial List of Categories of Sources and Schedule for Standards Under Sections 112(c) and (e) of the Clean Air Act Amendments of 1990* (61 FR 28197; June 4, 1996), as presented here.

TABLE 1—NESHAP AND INDUSTRIAL SOURCE CATEGORIES AFFECTED BY THIS PROPOSED ACTION

Source category	NESHAP	NAICS [1] code
Ethylene Production	40 CFR part 63, subparts XX and YY	325110.
Miscellaneous Organic Chemical Manufacturing	40 CFR part 63, subpart FFFF	3251, 3252, 3253, 3254, 3255, 3256, and 3259, with several exceptions.
Organic Liquids Distribution (Non-Gasoline)	40 CFR part 63, subpart EEEE	3222, 3241, 3251, 3252, 3259, 3261, 3361, 3362, 3399, 4247, 4861, 4869, 4931, 5622.
Petroleum Refineries	40 CFR part 63, subpart CC	324110.

[1] North American Industry Classification System.

The Ethylene Production source category includes any chemical manufacturing process unit in which ethylene and/or propylene are produced by separation from petroleum refining process streams or by subjecting hydrocarbons to high temperatures in the presence of steam. The ethylene production unit includes the separation of ethylene and/or propylene from associated streams such as a C_4 product,[1] pyrolysis gasoline, and pyrolysis fuel oil. The ethylene production unit does not include the manufacture of Synthetic Organic Chemical Manufacturing Industry (SOCMI) chemicals such as the production of butadiene from the C_4 stream and aromatics from pyrolysis gasoline.

The Organic Liquids Distribution (Non-Gasoline) source category includes, but is not limited to, those activities associated with the storage and distribution of organic liquids other than gasoline, at sites which serve as distribution points from which organic liquids may be obtained for further use and processing. The distribution activities include the storage of organic liquids in storage tanks not subject to other 40 CFR part 63 standards and transfers into or out of the tanks from or to cargo tanks, containers, and pipelines.

After the initial source category listings, in a November 7, 1996, document (61 FR 57602), the Agency combined 21 of the 174 originally defined source categories, and other organic chemical processes which were not included in the original 174 source category list, into one source category called the ''Miscellaneous Organic Chemical Processes'' source category. In a November 18, 1999, document (64 FR 63035), the Agency divided the ''Miscellaneous Organic Chemical Processes'' source category into 2 new source categories called the ''Miscellaneous Organic Chemical Manufacturing'' source category and the ''Miscellaneous Coating Manufacturing'' source category. The Miscellaneous Organic Chemical Manufacturing source category includes any facility engaged in the production of benzyltrimethylammonium chloride, carbonyl sulfide chelating agents, chlorinated paraffins, ethylidene norbornene, explosives, hydrazine, photographic chemicals, phthalate plasticizers, rubber chemicals, symmetrical tetrachloropyridine, oxybisphenoxarsine/1,3-diisocyanate, alkyd resins, polyester resins, polyvinyl alcohol, polyvinyl acetate emulsions, polyvinyl butyral, polymerized vinylidene chloride, polymethyl methacrylate, maleic anhydride copolymers, or any other organic chemical processes not covered by another maximum achievable control technology (MACT) standard. Many of these organic chemical processes involve similar process equipment, emission points, and control equipment, and are in many cases collocated with other source categories.

The Petroleum Refineries sector includes 2 source categories. The Petroleum Refineries MACT 1 source category includes any facility engaged in producing gasoline, naphthas, kerosene, jet fuels, distillate fuel oils, residual fuel oils, lubricants, or other products from crude oil or unfinished petroleum derivatives. The refinery process units in this source category include, but are not limited to, thermal cracking, vacuum distillation, crude distillation, hydroheating/hydrorefining, isomerization, polymerization, lubricating (''lube'') oil processing, and hydrogen production. The Petroleum Refineries MACT 2—Catalytic Cracking (Fluid and Other) Units, Catalytic Reforming Units, and Sulfur Recovery Units source category includes any facility engaged in producing gasoline, naphthas, kerosene, jet fuels, distillate fuel oils, residual fuel oils, lubricants, or other products from

[1] The C_4 product stream is a hydrocarbon product stream from an ethylene production unit consisting of compounds with 4 carbon atoms (*i.e.,* butanes, butenes, butadienes).

crude oil or unfinished petroleum derivates.

C. Where can I get a copy of this document and other related information?

In addition to being available in the docket, an electronic copy of this action is available on the internet. Following signature by the EPA Administrator, the EPA will post a copy of this proposed action at *https://www.epa.gov/stationary-sources-air-pollution/petroleum-refinery-sector-rule-risk-and-technology-review-and-new, https://www.epa.gov/stationary-sources-air-pollution/acetal-resins-acrylic-modacrylic-fibers-carbon-black-hydrogen, https://www.epa.gov/stationary-sources-air-pollution/miscellaneous-organic-chemical-manufacturing-national-emission,* and *https://www.epa.gov/stationary-sources-air-pollution/organic-liquids-distribution-national-emission-standards-hazardous.* Following publication in the **Federal Register,** the EPA will post the **Federal Register** version of the proposal and key technical documents at this same website.

Redline strikeout versions of each rule showing the edits that would be necessary to incorporate the changes proposed in this action are presented in the memoranda titled *Proposed Regulatory Text Edits for Subpart EEEE, Proposed Regulatory Text Edits for Subpart FFFF, Proposed Regulatory Text Edits for Subpart YY, and Proposed Regulatory Text Edits for Subpart CC,* available in the docket for this action (Docket ID No. EPA–HQ–OAR–2022–0787).

II. Background

A. Ethylene Production

The Ethylene Production MACT standards (herein called the EMACT standards) for the Ethylene Production source category are contained in the GMACT NESHAP, which also includes MACT standards for several other source categories. The EMACT standards were promulgated on July 12, 2002 (67 FR 46258), and codified at 40 CFR part 63, subparts XX and YY. As promulgated in 2002, and further amended on April 13, 2005 (70 FR 19266), and July 6, 2020 (85 FR 40386), the EMACT standards regulate hazardous air pollutant (HAP) emissions from ethylene production units located at major sources (as defined by CAA section 112(a)(1)). An ethylene production unit is a chemical manufacturing process unit in which ethylene and/or propylene are produced by separation from petroleum refining process streams or by subjecting hydrocarbons to high temperatures in the presence of steam. The EMACT standards define the affected source as all storage vessels, ethylene process vents, transfer racks, equipment, waste streams, heat exchange systems, and ethylene cracking furnaces and associated decoking operations that are associated with each ethylene production unit located at a major source as defined in CAA section 112(a)(1).

Following promulgation of the EMACT standards in July 2020, the EPA received 2 petitions for reconsideration in September 2020. The EPA received a joint petition from the American Chemistry Council (ACC) and American Fuel & Petrochemical Manufacturers (AFPM) and a petition from Earthjustice (on behalf of RISE St. James, Louisiana Bucket Brigade, Louisiana Environmental Action Network, Texas Environmental Justice Advocacy Services, Air Alliance Houston, Community In-Power & Development Association, Clean Air Council, Center for Biological Diversity, Environmental Integrity Project, and Sierra Club). Copies of the petitions are provided in the EMACT RTR rulemaking docket (EPA–HQ–OAR–2017–0357). The ACC/AFPM petitioned the EPA on, among other things, the storage vessel degassing provisions, ethylene cracking furnace burner repair provisions, and ethylene cracking furnace isolation valve inspections. Earthjustice petitioned the EPA on, among other things, the *force majeure* and exemption allowances for PRDs and emergency flaring. The ACC/AFPM and Earthjustice also raised other issues that are not being addressed in this rulemaking.

On April 19, 2022, the EPA sent a letter to petitioners informing them that it would grant reconsideration of the provisions addressing the work practice standards for PRDs, emergency flaring, and degassing of floating roof storage vessels. The EPA also stated in the letter to petitioners that it is continuing to review all issues raised in the petitions. A copy of the letter to petitioners is available in the docket for this rulemaking. The EPA will not respond to comments addressing any other issues or any other provisions of the final rule not specifically addressed in this proposed rulemaking.

B. Organic Liquids Distribution (Non-Gasoline)

The Organic Liquids Distribution (Non-Gasoline) (herein called OLD) NESHAP was promulgated on February 3, 2004 (69 FR 5038) and is codified at 40 CFR part 63, subpart EEEE. Organic liquids are any crude oils downstream of the first point of custody transfer and any non-crude oil liquid that contains at least 5 percent by weight of any combination of the 98 HAP listed in table 1 of 40 CFR part 63, subpart EEEE. For the purposes of the OLD NESHAP, as promulgated in 2004, and further amended on July 28, 2006 (71 FR 42898), April 23, 2008 (73 FR 21825), July 17, 2008 (73 FR 40977), and July 7, 2020 (85 FR 40740), organic liquids do not include gasoline, kerosene (No. 1 distillate oil), diesel (No. 2 distillate oil), asphalt, heavier distillate oil and fuel oil, fuel that is consumed or dispensed on the plant site, hazardous waste, wastewater, ballast water, or any non-crude liquid with an annual average true vapor pressure less than 0.7 kilopascals (0.1 pounds per square inch (psi)). Emission sources controlled by the OLD NESHAP are storage tanks, transfer operations, transport vehicles while being loaded, and equipment leak components (valves, pumps, and sampling connections) that have the potential to leak.

The EPA received three petitions for reconsideration for the OLD NESHAP in September 2020. The EPA received petitions from the American Petroleum Institute (API) and AFPM, Stoel Rives LLP (on behalf of Alyeska Pipeline Company), and Earthjustice (on behalf of California Communities Against Toxics, Coalition for a Safe Environment, and Sierra Club). Copies of the petitions are provided in the docket for this rulemaking. The API/AFPM and Stoel Rives LLP (on behalf of Alyeska Pipeline Company) commented on storage vessel degassing. The API/AFPM, Stoel Rives, and Earthjustice also raised other issues that are not being addressed in this rulemaking.

On September 8, 2021, the EPA sent a letter to petitioners informing them that it would grant voluntary reconsideration on certain issues, including the work practice standards for storage vessel degassing that apply broadly. Other issues for which EPA stated that it would grant voluntary reconsideration in the September 8, 2021, letter (*i.e.,* work practice standards for venting from conservation vents on the Valdez Marine Terminal's crude oil fixed roof tanks, fenceline monitoring) are still being reviewed and are not part of this action, and the EPA will not respond to comments addressing these other issues in this proposed rulemaking. The EPA also stated in the letter to petitioners that it is continuing to review all issues raised in the petitions. A copy of the letter to

petitioners is available in the docket for this rulemaking.

C. Miscellaneous Organic Chemical Manufacturing

The Miscellaneous Organic Chemical Manufacturing NESHAP (herein called the MON) for the Miscellaneous Organic Chemical Manufacturing source category was promulgated on November 10, 2003 (68 FR 63852), and codified at 40 CFR part 63, subpart FFFF. As promulgated in 2003, and further amended on July 1, 2005 (70 FR 38562), July 14, 2006 (71 FR 40316), and August 12, 2020 (85 FR 49084), the MON regulates HAP emissions from miscellaneous organic chemical manufacturing process units (MCPUs) located at major sources. An MCPU includes a miscellaneous organic chemical manufacturing process, as defined in 40 CFR 63.2550(i), and must meet the following criteria: it manufactures any material or family of materials described in 40 CFR 63.2435(b)(1); it processes, uses, or generates any of the organic HAP described in 40 CFR 63.2435(b)(2); and, except for certain process vents that are part of a chemical manufacturing process unit, as identified in 40 CFR 63.100(j)(4), the MCPU is not an affected source or part of an affected source under another subpart of 40 CFR part 63. An MCPU also includes any assigned storage tanks and transfer racks; equipment in open systems that is used to convey or store water having the same concentration and flow characteristics as wastewater; and components such as pumps, compressors, agitators, PRDs, sampling connection systems, open-ended valves or lines, valves, connectors, and instrumentation systems that are used to manufacture any material or family of materials described in 40 CFR 63.2435(b)(1). Sources of HAP emissions regulated by the MON include the following: process vents, storage tanks, transfer racks, equipment leaks, wastewater streams, and heat exchange systems.

Following promulgation of the MON in August 2020, the EPA received five petitions for reconsideration between October and December 2020. The EPA received petitions from Earthjustice (on behalf of RISE St. James, Louisiana Bucket Brigade, Louisiana Environmental Action Network, Texas Environmental Justice Advocacy Services, Air Alliance Houston, Ohio Valley Environmental Coalition, Blue Ridge Environmental Defense League, Environmental Justice Health Alliance for Chemical Policy Reform, Sierra Club, Environmental Integrity Project, and Union of Concerned Scientists), the Texas Commission on Environmental Quality (TCEQ), Squire Patton Boggs LLP (on behalf of Huntsman Petrochemical, LLC), and the ACC (who submitted two petitions). Copies of the petitions are provided in the docket for this rulemaking. The ACC petitioned the EPA on, among other things, the storage vessel degassing provisions and requirements for ethylene oxide sources. Earthjustice petitioned the EPA on, among other things, the *force majeure* and exemption allowances for PRDs and emergency flaring. The TCEQ, ACC, and Huntsman Petrochemical requested that the EPA reassess the MON risk assessment for issues around ethylene oxide risks; the EPA is responding to that reconsideration petition request in a separate rulemaking (87 FR 77985; December 21, 2022). Earthjustice and ACC also raised other issues that are not being addressed in this rulemaking.

On June 17, 2021, the EPA sent a letter to petitioners informing them that it is continuing to review all issues raised in the petitions. A copy of the letter to petitioners is available in the docket for this rulemaking.

D. Petroleum Refineries

On December 1, 2015 (80 FR 75178), the EPA finalized amendments to the petroleum refinery sector rules as the result of a sector RTR. These amendments included, among other provisions, adding work practice requirements to Petroleum Refinery MACT 1 (40 CFR part 63 subpart CC) for PRDs and flares in 40 CFR 63.648(j) and 63.670(o), respectively. These provisions specifically provide requirements for owners and operators to follow in the event of an atmospheric PRD release or emergency flaring event, including performing root cause analysis for each event and implementing corrective action(s) in accordance with the rule requirements. The atmospheric PRD release and emergency flaring provisions specify the conditions that result in a violation of the work practice standards in 40 CFR 63.648(j)(3)(v) and 63.670(o)(7), respectively. The owner or operator is required to track the number of events by emission unit and root cause. An atmospheric PRD release or emergency flaring event for which the root cause is determined to be poor maintenance or operator error is a violation of the work practice standards. Two atmospheric PRD releases or two emergency flaring events from the same emission unit when determined to be the result of the same root cause in a 3-year period is a violation of the work practice standard. Finally, three atmospheric PRD releases or 3 emergency flaring events from the same emission unit regardless of the root cause is a violation of the work practice standard (also referred to as ''the 'three strikes' provisions''). Notably, if the root cause is determined to be due to a *force majeure* event, as defined in 40 CFR 63.641, it does not count towards the criteria for a violation of the work practice standards.

The EPA received three petitions to reconsider the December 2015 final rule. Two petitions were filed on January 19, 2016, and February 1, 2016, jointly by API and the AFPM. In response to the January 19, 2016, petition, the EPA issued a proposal on February 9, 2016 (81 FR 6814), and a final rule on July 13, 2016 (81 FR 45232), fully responding to the January 19, 2016, petition for reconsideration. The third petition was filed on February 1, 2016, by Earthjustice on behalf of Air Alliance Houston, California Communities Against Toxics, Clean Air Council, Coalition for a Safe Environment, Community In-Power & Development Association, Del Amo Action Committee, Environmental Integrity Project, Louisiana Bucket Brigade, Sierra Club, Texas Environmental Justice Advocacy Services, and Utah Physicians for a Healthy Environment. The Earthjustice petition claimed that several aspects of the revisions to the Petroleum Refinery MACT 1 were not proposed and that, therefore, the public was precluded from commenting on the altered provisions during the public comment period, including, among other provisions, the work practice standards for PRDs and emergency flaring. On June 16, 2016, the EPA sent letters to petitioners granting reconsideration on issues where petitioners claimed they had not been provided an opportunity to comment. These petitions and letters granting reconsideration are available for review in the rulemaking docket (see Docket ID Item No. EPA–HQ–OAR–2022–0787). On October 18, 2016 (81 FR 71661), the EPA proposed for public comment the issues for which reconsideration was granted in the June 16, 2016, letters. The EPA solicited public comment on five issues in the proposal, including: the work practice standard for PRDs; the work practice standard for emergency flaring events; and the assessment of risk as modified based on implementation of these PRD and emergency flaring work practice standards. On February 4, 2020, the EPA issued a final action (85 FR 6064) setting forth its decisions on each of the five reconsideration items included in the October 18, 2016 (81 FR 71661),

proposed notice of reconsideration (October 2016 proposed notice of reconsideration).

On April 6, 2020, Earthjustice submitted a petition for reconsideration of the February 2020 final action on behalf of Air Alliance Houston, California Communities Against Toxics, Clean Air Council, Coalition For A Safe Environment, Community In-Power & Development Association, Del Amo Action Committee, Environmental Integrity Project, Louisiana Bucket Brigade, Sierra Club, Texas Environmental Justice Advocacy Services, and Utah Physicians for a Healthy Environment (Docket Item No. EPA–HQ–OAR–2010–0682–1000). The petition for reconsideration requested that the EPA reconsider five issues in the February 4, 2020, final rule: (1) The EPA's rationale that the PRD standards and emergency flaring standards are continuous; (2) the EPA's rationale for the PRD standards under CAA sections 112(d)(2) and 112(d)(3); (3) the EPA's rationale for separate work practice standards for flares operating above the smokeless capacity; (4) the EPA's rationale for risk acceptability and risk determination; and (5) the EPA's analysis and rationale in its assessment of acute risk. The EPA initially denied the April 6, 2020, petition for reconsideration (85 FR 67665) and provided detailed responses to each of the five issues raised in the April 2020 petition in a September 3, 2020, letter, which is available in the Petroleum Refinery rulemaking docket (Docket Item No. EPA–HQ–OAR–2010–0682–0999). Subsequently, after further consideration, the EPA wrote a letter on April 19, 2022, to petitioners explaining that it has decided to undertake reconsideration on select provisions related to the work practice standards for PRDs and emergency flaring. Specifically, the EPA is reconsidering the inclusion of the *force majeure* allowances in the PRD and emergency flaring work practice standards as discussed in detail in section III.A of this preamble. As noted in our April 19, 2022, letter, we may reconsider additional issues in the future.

III. Reconsideration Issues, Request for Public Comments, and Other Proposed Changes

To address selected issues for which we granted reconsideration and to provide other technical corrections, the EPA is proposing revisions to the EMACT standards, OLD NESHAP, MON, and Petroleum Refineries NESHAP. The EPA is proposing revisions to the work practice standards for PRDs and emergency flaring related to *force majeure* provisions in the EMACT standards, MON, and Petroleum Refineries NESHAP, and is proposing standards for the degassing of storage vessels in the EMACT standards, OLD NESHAP, and MON. The EPA is also proposing to add requirements for pressure-assisted flares and mass spectrometers to the Petroleum Refineries NESHAP to align this rule with other more recent chemical sector rules and eliminate the need to request site-specific alternative means of emission limitations (AMELs) for these units. In addition, the EPA is proposing other technical corrections, clarifications, and correction of typographical errors in all rules. To ensure public participation in its final decisions, the EPA is requesting public comment on these specific issues as described below. The EPA will not respond to comments addressing any other issues or any other provisions of the final rule not specifically addressed in this proposed rulemaking.

A. Pressure Relief Devices and Emergency Flaring

As described in the background section II.D of this preamble, the work practice standards for PRDs and emergency flaring in Petroleum Refinery MACT 1 provide the criteria for violating the work practice standards based on a count of the events by emission unit and root cause. The count of events by emission unit currently excludes events for which the root cause is determined to be *force majeure* as defined in 40 CFR 63.641. In their April 2020 petition, petitioners took issue with the inclusion of the *force majeure* allowance as they claim that it makes the standards non-continuous and that it is inappropriate to include this allowance based on the inclusion of similar provisions in two local California rules (South Coast Air Quality Management District; Bay Area Air Quality Management District). The EPA fully responded to these issues in the September 2020 letter (Docket Item No. EPA–HQ–OAR–2010–0682–0999) and the EPA's position on these issues has not changed. Namely, there are components of both the PRD management provisions and emergency flaring provisions that apply at all times and not all components of the standard must apply at all times for the standard to be continuous. The EPA also stated that its consideration of the continuous nature of the work practice standards and their basis in the two local California rules has been set forth in a manner consistent with public review and comment requirements.

However, during our recent reconsideration efforts, the EPA recognizes that despite the term ''*force majeure*'' being carefully defined, the *force majeure* allowance in the work practice standards may present difficulties for determining compliance. It may also represent a provision that some facility owners or operators may seek to use to avoid incurring violations and pursuing potentially disruptive corrective actions. The reporting requirements for the work practice standards in 40 CFR 63.655(g)(10)(iv) and 63.655(g)(11)(iv) provide that the refinery owner or operator must report the results of the root cause and corrective action analysis completed during the reporting period (*i.e.,* semiannually). The reporting of the event-specific data associated with the work practice standards is currently included in periodic reports that are submitted to the delegated state authority and/or EPA Regional Office, as applicable, and are thus not publicly available. During the root cause analysis and corrective action process, refineries maintain discretion when categorizing and reporting the root cause of atmospheric PRD releases and emergency flaring events, thereby placing the onus on the EPA to determine whether the definition of *force majeure* has been appropriately applied.

In acknowledgement of these concerns and to fully inform our decision as to whether rule amendments for Petroleum Refinery MACT 1 are necessary with respect to the *force majeure* allowance, we reviewed periodic reports from refineries in Texas and Louisiana obtained through the EPA Regional Office. For atmospheric PRD releases, we reviewed periodic reports from 18 refineries spanning 0.5–1.5 years of time per refinery, and a total of 12.5 refinery-years. These reports covered semiannual compliance reporting periods during calendar years 2019 through 2021. During that time, there were atmospheric PRD releases at four of these 18 refineries. There were five total releases. None of the determined root causes were attributed to events that meet the definition of the term *force majeure.* For emergency flaring events, we reviewed periodic reports from 22 refineries spanning 0.5–1.5 years of time per refinery, and a total of 15.5 refinery-years. During that time, there were emergency flaring events at six of these 22 refineries. There were eight total events at these six refineries. Of these, three of the eight events were attributed to causes that, as reported, meet the definition of the term *force*

majeure. In reviewing these data, we conclude that atmospheric PRD releases and emergency flaring events are relatively infrequent at refineries and that those determined to have a root cause characterized as a *force majeure* event are even less so.

When we initially proposed the Petroleum Refinery MACT 1 requirements, the primary data available for event releases were from the TCEQ Air Emission Event Report Database,[2] which requires the reporting of emission events that exceed a reportable quantity and industry comments with limited supporting documentation. Based on the available data, we concluded that the ''three strikes'' provisions were reasonable, but there were concerns that circumstances outside of the refinery's control may cause violations. Based on the data available now, we conclude that the frequency of these types of releases is lower than originally expected. This lower frequency may be due to the refinery sector rule's provisions, like the redundant prevention measures for PRD, which were implemented in the final rule and that apply at all times. Given these data and the lower frequency of *force majeure* events, we conclude that the *force majeure* allowances included in the provisions for PRDs and flares are not necessary. We also find that by removing the *force majeure* allowance, the rule is strengthened, and compliance becomes easier to assess as it is determined purely based on the count of events by emission unit and root cause. There is no categorization or interpretation related to the root cause of the event. The corrective action component of the work practice standards would now apply to all events regardless of the root cause and all events would count towards the violation criteria set forth in the standard. As noted, our analyses were performed on data we requested directly from the EPA Regional Offices, which are not readily available to the public. We find that making these data readily available to the public would increase the transparency of the events regulated by the work practice standards.

Therefore, in this proposed action, the EPA is proposing to remove the term *force majeure* from the list of defined terms in 40 CFR 63.641 as well as to remove the *force majeure* allowance from the criteria for a violation of the work practice standards for atmospheric PRD releases and emergency flaring events in 40 CFR 63.648(j)(3) and 63.670(o)(7). We are also proposing to amend the reporting requirements for the event-specific work practice standard data in 40 CFR 63.655(g)(10)(iv) and 63.655(g)(11)(iv) to require these data to be reported electronically through the EPA's Central Data Exchange (CDX) using the Compliance and Emissions Data Reporting Interface (CEDRI).

The EMACT standards and MON include the same work practice standards for PRDs and emergency flaring as Petroleum Refinery MACT 1. The OLD NESHAP also includes the same work practice standard for emergency flaring as Petroleum Refinery MACT 1. Because compliance with the work practice standards for existing sources begins in summer of 2023 for these 3 rules, we do not have the number of events that count towards violations for these NESHAP, but the rationale and benefits for removing the *force majeure* allowance follows exactly as discussed above for refineries. These include removing the onus from the EPA as to whether the definition of *force majeure* has been appropriately applied when determining the root cause, making compliance easier to assess, and strengthening both rules. For flares, the EMACT standards, OLD NESHAP, and MON directly reference the petroleum refinery flare provisions at 40 CFR 63.670. Therefore, the above-mentioned proposed revisions to 40 CFR 63.670(o)(7) for emergency flaring events would be automatically incorporated into the requirements for the EMACT standards, OLD NESHAP, and MON. In addition, the EPA is proposing to remove the term ''*force majeure*'' from the list of defined terms in 40 CFR 63.2406, because this definition was included specifically due to the *force majeure* provisions for emergency flaring events. The EPA is also proposing to remove the term ''*force majeure*'' from the list of defined terms in 40 CFR 63.1103(e)(2) and 63.2550 as well as to remove the *force majeure* allowance from the criteria for a violation of the work practice standard for atmospheric PRD releases in 40 CFR 63.1107(h)(3) and 63.2480(e)(3). Lastly, the EPA is proposing new reporting requirements for the EMACT standards at 40 CFR 63.1110(a)(10)(iii) to require electronic reporting, through the CDX using CEDRI, of the event-specific work practice standard data in 40 CFR 63.1110(e)(4)(iv) and 63.1110(e)(8)(iii). We note that the MON already has a more general compliance report template for electronic reporting, see 40 CFR 63.2520(e), which will automatically incorporate electronic reporting of the event-specific work practice standard data.

B. Storage Vessel Degassing

The 2020 EMACT standards, OLD NESHAP, and MON included a standard for storage vessel degassing to control emissions from shutdown operations (see the work practice standards in 40 CFR 63.1103(e)(10), 63.2346(a)(6), and 63.2470(f), respectively). The rules allow storage vessels to be vented to the atmosphere once a storage vessel degassing concentration threshold is met (*i.e.,* less than 10 percent of the lower explosive limit (LEL)) and all standing liquid has been removed from the vessel to the extent practicable. The requirements are applicable to fixed roof and floating roof storage vessels that are subject to control requirements in each of the rules. We did not propose a storage vessel degassing standard in the EMACT standards, OLD NESHAP, and MON, but we finalized a standard based on comments received for all 3 rules. We based the degassing standard on Texas permit conditions, which represented the MACT floor.[3] Specifically, permit condition 6 (applicable to floating roof storage vessels) and permit condition 7 (applicable to fixed roof storage vessels) formed the basis of the storage vessel degassing standard.

The petitioners argued that including a storage vessel degassing standard for floating roof storage vessels was not a logical outgrowth of the proposal and that it was not possible to comment on this standard. As previously noted in section II of this preamble, the EPA granted reconsideration on this issue. The petitioners stated that while they did identify the Texas permit conditions as a reference in their comments, certain key information was not incorporated into the final EMACT standards, OLD NESHAP, and MON for the degassing of floating roof storage vessels. Additionally, the petitioners argued that they did not request additional work practices for floating roof storage vessels for which owners and operators already elect to comply with the floating roof storage vessels requirements in 40 CFR part 63, subpart WW because, even with the removal of the shutdown exemption, the petitioners contended that it is still possible to comply with the subpart WW provisions (because these provisions already provide continuous control during degassing by limiting the vapor space of the storage vessel via the

[2] TCEQ Search Air Emission Event Reports, *https://www.texas.gov/.*

[3] Texas Permit Conditions are available at: *https://www.tceq.texas.gov/assets/public/permitting/air/Guidance/NewSourceReview/mss/chem-mssdraftconditions.pdf.*

floating roof and requiring prompt and continuous filling until the roof is refloated).

We disagree with the petitioners' claims that a separate standard for floating roof storage vessel degassing is not needed due to the removal of the shutdown exemption. Rather, as discussed here, the EPA must set a storage vessel degassing standard that applies to all storage vessels under CAA section 112, and 40 CFR part 63, subpart WW, does not adequately control degassing emissions from floating roof storage vessels. First, the emission source for which the EPA is required to set a MACT standard is storage vessels, regardless of whether the source has a fixed roof or floating roof. While petitioners contend that their comments did not specifically mention the degassing of floating roof storage vessels (rather, only the degassing of fixed roof storage vessels), the CAA is clear that the EPA is required to set MACT standards for each emission source, which, in this instance, includes all storage vessels, regardless of roof type. Further, the EPA has never subcategorized storage vessels by roof type. Rather, the EMACT standards, OLD NESHAP, and MON allow owners or operators to choose from different options to control emissions from storage vessels and comply with the MACT standards. As is relevant, using a floating roof that meets the requirements in 40 CFR part 63, subpart WW, is one of the control options owners or operators may choose for control of emissions during normal storage vessel operations. Thus, the EPA is required under CAA section 112 to set a MACT standard for previously unregulated degassing operations for all storage vessels (regardless of roof type) and not for some subset of storage vessels as the petitioners assert.

Second, storage vessel degassing is a unique shutdown activity with operations and emissions that are completely different from normal storage vessel operations. While the previous MACT standards-controlled emissions of breathing losses and working losses from normal storage vessel operations, storage vessel degassing is a very infrequent event (*i.e.,* occurring on average every 14 years based on EMACT data) for which commenters requested an alternative standard in the EMACT standards, OLD NESHAP, and MON when EPA removed the shutdown exemption in those NESHAP. The storage vessel degassing process first requires owners or operators to empty the tank of liquid contents. When this occurs, the floating roof on a floating roof storage vessel no longer acts as a control for HAP emissions as it is no longer floating on the liquid in the tank and minimizing vapor space. Rather, the roof is landed on legs and effectively acts as a fixed roof storage vessel with respect to emissions generation. From there, the storage vessel is generally purged, typically with an inert material such as nitrogen or steam, for a period of time to remove residual vapors before the vessel can be opened to perform maintenance. This purge stream generates HAP emissions and is the subject of the MACT control requirements for which the EPA is proposing alternative standards. As such, complying with the 40 CFR part 63, subpart WW, requirements for floating roof storage vessels is not an effective control for HAP emissions during the degassing phase of a floating roof storage vessel, when it essentially operates as a fixed roof storage vessel. Furthermore, storage vessel degassing provisions in Texas and the South Coast Air Quality Management District in California exist precisely because a standard specific to storage vessel degassing is warranted, including for floating roof storage vessels.

After determining that a standard is necessary for degassing of all storage vessels (regardless of roof type), the EPA reviewed the Texas permit conditions again to determine if revisions to the degassing standard for floating roof storage vessels in the EMACT standards, OLD NESHAP, and MON are appropriate. As noted by the petitioners, Texas permit condition 6.B does provide certain allowances for the degassing process for floating roof storage vessels; a 24-hour window is provided to start controlled degassing after the floating roof storage vessel has been drained, and the storage vessel may be opened during this period only to set up for degassing and cleaning. We determined that the 24-hour window stipulates how long a floating roof storage vessel can be landed before it needs to be filled again or degassed, but it does not have a direct bearing on the underlying control standard for degassing operations. As such, we are not revising the rules to incorporate the 24-hour window into the storage vessel degassing standard. Regarding the opening of the floating roof storage vessel to set up for degassing and cleaning, while we do not believe the current language precludes a facility from taking this step, we are revising the standard to include related language for clarity. For example, the petitioners noted that it is necessary to make connections to a temporary control device to control the floating roof storage vessel degassing emissions, which may require opening the storage vessel to make these connections. Therefore, we are proposing that a floating roof storage vessel may be opened prior to degassing to set up equipment (*i.e.,* make connections to a temporary control device), but this must be done in a limited manner and must not actively purge the storage vessel while connections are made.

An opportunity to comment on the storage vessel degassing provisions was not previously provided because the provisions were included in the final rules but not in the proposed rules. Therefore, the EPA is re-proposing what was finalized for each rule in 2020 and is proposing additional revisions to address degassing of floating roof storage vessels. We are proposing storage vessel degassing standards for the EMACT standards at 40 CFR 63.1103(e)(10), the OLD NESHAP at 40 CFR 63.2346(a)(6), and the MON at 40 CFR 63.2470(f).

C. Other Technical Corrections and Clarifications

There are several additional revisions that we are proposing for the EMACT standards, OLD NESHAP, MON, and Petroleum Refineries NESHAP to address other technical corrections and clarifications and to correct typographical errors. These proposed corrections and clarifications are summarized in table 2 through table 4 of this preamble in the following sections. We request public comment on each of these revisions.

1. EMACT Standards

Table 2 of this preamble provides responses to specific issues raised by stakeholders and presents proposed revisions to the EMACT standards to address certain technical corrections, clarifications, and typographical errors.

TABLE 2—SUMMARY OF PROPOSED REVISIONS TO 40 CFR PART 63, SUBPART YY

Provision	Issue summary	Proposed revision
40 CFR 63.1103(e)(7)(i)	Delay of burner repair provisions: A petitioner argued that requiring an ethylene cracking furnace to implement the delay of burner repair provisions finalized in the 2020 final rule is impracticable and is inconsistent with what the best performers are doing. The petitioner stated that a significant amount of preparation is needed to shut down an ethylene cracking furnace and that no source can comply with the delay of burner repair provisions as written. Accordingly, where a burner cannot be repaired without an ethylene cracking furnace shutdown, owners or operators would have to decoke their ethylene cracking furnaces immediately (*i.e.,* within 1 day of identifying flame impingement), leading to more decoking events and subsequently more emissions from the decoking of ethylene cracking furnaces.	An opportunity to comment on the delay of burner repair provisions was not previously provided because the provisions were included in the final rule but not in the proposed rule. Therefore, the EPA is re-proposing what was finalized along with the following revisions for delay of burner repair. The EPA is proposing to remove the requirement that the owner or operator may only delay burner repair beyond 1 calendar day if a shutdown for repair would cause greater emissions than the potential emissions from delaying repair. We agree that this requirement is impracticable and could lead to more decoking events and more emissions from decoking of ethylene cracking furnaces. Instead, the EPA is proposing that delay of repair beyond 1 calendar day is allowed if the repair cannot be completed during normal operations, the burner cannot be shut down without significantly impacting the furnace heat distribution and firing rate, and action is taken to reduce flame impingement as much as possible during continued operation. We are also maintaining that if a delay of repair is required to fully resolve burner flame impingement, repair must be completed following the next planned decoking operation (and before returning the ethylene cracking furnace back to normal operations) or during the next ethylene cracking furnace complete shutdown (when the ethylene cracking furnace firebox is taken completely offline), whichever is earlier.
40 CFR 63.1103(e)(8)(i)	Isolation valve inspection and repair: A petitioner requested that the EPA revise the requirement to rectify poor isolation prior to continuing decoking operations. The petitioner argued that certain isolation valve repairs must be completed after the ethylene cracking furnace is shut down, which consequently requires the ethylene cracking furnace to go through decoking. The petitioner said that if a furnace is not decoked prior to shutdown, damage can occur to the furnace tubes and could pose a safety issue. In addition, the petitioner noted that some isolation valves serve gas streams from multiple ethylene cracking furnaces, and there may be instances when all furnaces would need to be decoked and shut down to properly rectify the isolation valve issue. The petitioner argued that allowing for some flexibility is necessary for facilities to operate properly and to avoid damaging equipment.	The EPA agrees with the petitioner and is proposing language to allow facilities to wait and rectify isolation valve issues after a decoking operation, provided that the owner or operator can reasonably demonstrate that damage to the radiant tube(s) or ethylene cracking furnace would occur if the repair was attempted prior to completing a decoking operation and/or prior to the ethylene cracking furnace being shut down.
40 CFR 63.1110(e)(4)(iii)	Provision contains a typographical error	The EPA is proposing to replace "§ 63.1109(e)(7)" with "§ 63.1109(e)(6)" to correct the typographical error.
40 CFR 63.1102(c)(11), (d)(2)(ii), and (e)(2)(iii).	Provisions contain a typographical error	The EPA is proposing to replace "§ 63.1108(a)(4)(i)" with "§ 63.1108(a)(4)" to correct a typographical error that we made while removing startup, shutdown, and malfunction (SSM) exemptions. Our intent was to include all of 40 CFR 63.1108(a)(4) in the EMACT standards. This proposed revision would also resolve analogous typographical errors for the carbon black and cyanide chemicals source categories that are also contained in 40 CFR part 63, subpart YY.

TABLE 2—SUMMARY OF PROPOSED REVISIONS TO 40 CFR PART 63, SUBPART YY—Continued

Provision	Issue summary	Proposed revision
40 CFR 63.1103(e)(4)(iii) and 63.1110(a)(10)(i), (ii), (iii), and (iv).	Provisions needing technical clarifications or removal	The EPA is proposing to remove duplication and point directly to 40 CFR 63.9(k) when the source is required to submit certain reports to CEDRI. Specifically, instructions for submitting reports electronically through CEDRI, including instructions for submitting CBI and asserting a claim of EPA system outage or *force majeure,* were recently added to 40 CFR 63.9(k) (85 FR 73885); therefore, text related to these requirements is no longer necessary in the EMACT standards.

2. OLD NESHAP

Table 3 of this preamble provides responses to specific issues raised by stakeholders and presents proposed revisions to the OLD NESHAP to address certain technical corrections, clarifications, and typographical errors.

TABLE 3—SUMMARY OF PROPOSED REVISIONS TO 40 CFR PART 63, SUBPART EEEE

Provision	Issue summary	Proposed revision
40 CFR 63.2346(a)(6)	Provision contains a typographical error.	The EPA is proposing to replace ''items 3 through 6 of table 2 to this subpart'' with ''items 2 through 6 of table 2 to this subpart'' to correct the typographical error.
40 CFR 63.2346(e)	Provision contains a typographical error.	The EPA is proposing to replace ''storage vessels'' with ''storage tanks'' to correct the typographical error.
40 CFR 63.2378(e)(3)	Provisions needing technical clarifications.	The EPA is proposing to add the word ''planned'' in front of ''routine maintenance'' in the last sentence of the provision to further clarify that the exemption only applies to periods of planned routine maintenance. We are also proposing to replace ''storage vessel'' with ''storage tank'' in the last sentence of the provision to correct a typographical error.
40 CFR 63.2378(e)(4)	Provisions needing technical clarifications.	To create consistency in the time period during which the bypass provision applies (*i.e.,* the level of material in the storage tank must not be increased during the same time period that breathing loss emissions bypass the fuel gas system or process), we are proposing to delete ''to perform routine maintenance'' from the last sentence of 40 CFR 63.2378(e)(4). We are also proposing to replace ''storage vessel'' with ''storage tank'' in the last sentence of the provision to correct a typographical error.
40 CFR 63.2382(d)(3), and 63.2386(f), (g), (h), (i), and (j).	Provisions needing technical clarifications or removal.	The EPA is proposing to remove duplication and point directly to 40 CFR 63.9(k) when the source is required to submit certain reports to CEDRI. Specifically, instructions for submitting reports electronically through CEDRI, including instructions for submitting CBI and asserting a claim of EPA system outage or *force majeure,* were recently added to 40 CFR 63.9(k) (85 FR 73885); therefore, text related to these requirements is no longer necessary in the OLD NESHAP.

3. MON

This section of this preamble presents revisions we are proposing to the MON heat exchange system requirements. In addition, table 4 of this preamble provides responses to other specific issues raised by stakeholders and presents proposed revisions to the MON to address certain technical corrections, clarifications, and typographical errors.

In May 2021, EPA Region 4 received a request from Eastman Chemical Company to perform alternative monitoring instead of the Modified El Paso Method to monitor for leaks in Eastman's Tennessee Operations heat exchange systems, which primarily have cooling water containing soluble HAP with a high boiling point. Eastman requested that the previous water sampling requirements for heat exchange system leaks provided in the MON, which ultimately references 40 CFR 63.104(b) (*i.e.,* use of any EPA-approved method listed in part 136 of this chapter as long as the method is sensitive to concentrations as low as 10 parts per million (ppm) and the same method is used for both entrance and exit samples), be allowed for cooling water containing certain soluble HAP in lieu of using the Modified El Paso Method.

Eastman specifically identified two HAP, 1,4-dioxane and methanol, which do not readily strip out of water using the Modified El Paso Method. Eastman's application for alternative monitoring included experimental data showing that the Modified El Paso Method would likely not identify a leak of these HAP in heat exchange system cooling water. Eastman conducted Modified El Paso Method monitoring under controlled scenarios to determine how much methanol and 1,4-dioxane would be detected. The scenarios included solutions of water and either methanol or 1,4-dioxane at concentrations of 1 part per million by weight (ppmw), 20 ppmw, and 100 ppmw (as measured using water sampling methods allowed previously in the MON). The Modified El Paso Method did not detect any

methanol or 1,4-dioxane from the 1 ppmw and 20 ppmw solutions (*i.e.,* methanol and 1,4-dioxane did not strip out of the water in detectable amounts). The Modified El Paso Method detected very little HAP from the 100 ppmw solutions, with a maximum of only 0.17 percent of the 1,4-dioxane stripping out and being detected.

Based on this information, the EPA is proposing at 40 CFR 63.2490(e) that the leak monitoring requirements for heat exchange systems at 40 CFR 63.104(b) may be used in limited instances, instead of using the Modified El Paso Method to monitor for leaks. We still maintain that the Modified El Paso Method is the preferred method to monitor for leaks in heat exchange systems and are proposing that the requirements of 40 CFR 63.104(b) may only be used if 99 percent by weight or more of all the organic compounds that could potentially leak into the cooling water have a Henry's Law Constant less than 5.0E–6 atmospheres per mole per cubic meter (atm-m^3/mol) at 25° Celsius. We selected this threshold based on a review of Henry's Law Constants for the HAP listed in table 4 to subpart F of 40 CFR part 63, as well as the water-soluble organic compounds listed in Eastman's request. Henry's Law Constants are available from the EPA at *https://comptox.epa.gov/dashboard/.* Examples of HAP that have a Henry's Law Constant of less than 5.0E–6 atm-m^3/mol at 25° Celsius are aniline, 2-chloroacetophenone, diethylene glycol diethyl ether, diethylene glycol dimethyl ether, dimethyl sulfate, 2,4-dinitrotoluene, 1,4-dioxane, ethylene glycol monoethyl ether acetate, ethylene glycol monomethyl ether acetate, methanol, and toluidine. Many of these HAP also have very high boiling points, with most above 300 °F, which means they will generally stay in the cooling water and not be emitted to the atmosphere. While we are proposing that the leak monitoring and leak definition requirements at 40 CFR 63.104(b) may be used in limited instances, we are not proposing that other provisions of 40 CFR 63.104 apply. Instead, for example, facilities that use water sampling to detect leaks must still comply with the recordkeeping and reporting requirements of 40 CFR 63.2520(e)(16) and 40 CFR 63.2525(r). We are proposing revisions at 40 CFR 63.2520(e)(16) and 40 CFR 63.2525(r) to specify this.

Table 4 of this preamble provides responses to other specific issues raised by stakeholders and presents proposed revisions to the MON to address certain technical corrections, clarifications, and typographical errors.

TABLE 4—SUMMARY OF PROPOSED REVISIONS TO 40 CFR PART 63, SUBPART FFFF

Provision	Issue summary	Proposed revision
40 CFR 63.2450(e)(6)(i)	Provision contains a typographical error	The EPA is proposing to replace the reference to 40 CFR 63.148(h)(3) with a reference to 40 CFR 63.148(i)(3) to correct the typographical error.
40 CFR 63.2450(e)(7)	A petitioner requested that the EPA clarify whether certain adsorber provisions referenced within 40 CFR 63.983 and other related requirements and exceptions (*i.e.,* 40 CFR 63.2470(c)(3), 40 CFR 63.2520(d)(6) and (e)(13), and 40 CFR 63.2525(o)) apply to this paragraph. The petitioner also pointed out that it is not clear whether a supplement to the notification of compliance status (NOCS) report is needed, and if necessary, what information should be provided.	The EPA is proposing to clarify that 40 CFR 63.2470(c)(3), 40 CFR 63.2520(d)(6) and (e)(13), 40 CFR 63.2525(o), and the provisions referenced within 40 CFR 63.983 all apply (in addition to 40 CFR 63.2450(e)(4) and (e)(6)) if facilities reduce organic HAP emissions by venting emissions through a closed-vent system to an adsorber(s) that cannot be regenerated or a regenerative adsorber(s) that is regenerated offsite. We are also clarifying in 40 CFR 63.2450(e)(1) that 40 CFR 63.2450(e)(1) does not apply when complying with 40 CFR 63.2450(e)(7). As part of this clarification, we are also proposing a new requirement at 40 CFR 63.2520(d)(6) for adsorbers subject to the requirements of 40 CFR 63.2450(e)(7) requiring a supplement to the NOCS report within 150 days after the first applicable compliance date. We are proposing that the supplement to the NOCS report must describe whether the adsorber cannot be regenerated or is a regenerative adsorber(s) that is regenerated offsite and must specify the breakthrough limit and adsorber bed life that was established during the initial performance test or design evaluation of the adsorber. Finally, we are proposing to revise the introductory paragraph of 40 CFR 63.2520 as well as the requirement in 40 CFR 63.2515(d) to update the reference to the proposed 40 CFR 63.2520(d)(6) paragraph.
40 CFR 63.2460(c)(9)	Provision contains a typographical error	The EPA is proposing to replace the phrase ''in paragraphs (c)(9)(i) through (vi) of this section'' with ''in paragraphs (c)(9)(i) through (iv) of this section'' to correct the typographical error.
40 CFR 63.2480(a)	Provision contains a typographical error	The EPA is proposing to replace the phrase ''For each light liquid pump, valve, and connector in ethylene oxide service'' with ''For each light liquid pump, pressure relief device, and connector in ethylene oxide service'' to correct the typographical error.

TABLE 4—SUMMARY OF PROPOSED REVISIONS TO 40 CFR PART 63, SUBPART FFFF—Continued

Provision	Issue summary	Proposed revision
40 CFR 63.2480(e)(2)(ii) and (e)(2)(iii).	A petitioner pointed out that EPA agreed in its response to comment document (see docket item EPA–HQ–OAR–2018–0746–0200) to delete the second sentence from these provisions; however, the final rule (85 FR 49084) does not reflect these deletions.	It was our intent to delete the second sentence from these provisions (*i.e.,* the requirement to conduct monitoring if rupture disks are replaced). As stated in our response to comment document (see docket item EPA–HQ–OAR–2018–0746–0200), we agree that the language diverges from what 40 CFR part 63, subpart UU, required for PRDs. Therefore, we are proposing to correct this error by deleting the second sentence from these provisions.
40 CFR 63.2480(f)(18)(iii)	Provision contains a typographical error	The EPA is proposing to replace ''§ 63.181(b)(2)(i)'' with ''§ 63.181(b)(3)(i)'' to correct the typographical error.
40 CFR 63.2480(f)(18)(vi)	A petitioner contended that the reference to information required to be reported under 40 CFR 63.182(d)(2)(xiv) is too broad and should be more narrowly described as ''information in § 63.165(a) required to be reported under 40 CFR 63.182(d)(2)(xiv)'' in order to clarify that the reporting requirement is specific to the recently promulgated PRD requirements.	We agree with the petitioner and are proposing to clarify this provision by including ''in § 63.165(a).'' The proposed language reads ''The information in § 63.165(a) required to be reported under 40 CFR 63.182(d)(2)(xiv) is now required to be reported under § 63.2520(e)(15)(i) through (iii).''
40 CFR 63.2480(f)(18)(x)	Provision contains a typographical error	The EPA is proposing to replace ''§ 63.1022(a)(1)(v)'' with ''§ 63.1023(a)(1)(v)'' to correct the typographical error.
40 CFR 63.2480(f)(18)(xiii)	A petitioner contended that the reference to information required to be reported under 40 CFR 63.1039(b)(4) is too broad and should be more narrowly described as ''information in § 63.1030(b) required to be reported under 40 CFR 63.1039(b)(4)'' in order to clarify that the reporting requirement is specific to the recently promulgated PRD requirements.	We agree with the petitioner and are proposing to clarify this provision by including ''in § 63.1030(b).'' The proposed language reads ''The information in § 63.1030(b) required to be reported under 40 CFR 63.1039(b)(4) is now required to be reported under § 63.2520(e)(15)(i) and (ii).''
40 CFR 63.2493(a)(2)(vi) and (b)(4).	A petitioner requested clarification of scrubber monitoring parameters and the types of scrubbers that are applicable to certain requirements. The petitioner stated that the rule is only applicable to scrubbers that use an acid solution and reactant tank, but that other types of scrubbers are used in instances when ethylene oxide is present in small amounts. The petitioner requested that the pH monitoring parameter be revised to account for other types of scrubbers. The petitioner also requested that the temperature of the ''scrubber liquid'' be monitored instead of the temperature of the ''water.''	Scrubbers that use an acid solution and reactant tank are the primary focus of the scrubber monitoring requirements because this type of scrubber liquid is necessary to specifically control ethylene oxide. As such, we are not revising the monitoring parameters to apply more broadly, such as to scrubbers that use water as the scrubbing liquid. We are proposing clarifying language that the monitoring requirements are applicable to scrubbers ''with a reactant tank.'' We agree with the petitioner regarding temperature monitoring and are proposing a correction that the temperature of the ''scrubber liquid'' must be monitored. If a facility uses a scrubber without a reactant tank that provides incidental control of ethylene oxide, the facility may establish site-specific parameters using 40 CFR 63.2493(a)(2)(viii) and (b)(6).
40 CFR 63.2492(b)	A petitioner requested that an alternative to sampling and analysis of storage tank materials should be allowed, to determine if a storage tank is in ethylene oxide service. The petitioner stated that information already exists for some storage tanks to show that the ethylene oxide concentration in the material stored is less than 0.1 percent by weight (sometimes significantly so) and the requirement to conduct sampling and analysis is unnecessary.	We agree with the petitioner and are proposing to allow calculations to be performed to show that the ethylene oxide concentration is less than 0.1 percent by weight of the material stored in the storage tank, provided the calculations rely on information specific to the material stored. This may include using, for example, specific concentration information from safety data sheets.
40 CFR 63.2493(b)(2)	A petitioner requested that the EPA include introductory language to clarify that the requirements apply only if the facility chooses to route emissions to a non-flare control device and chooses to comply with the 1 ppmv standard via continuous emission monitoring systems (CEMS).	We agree with the petitioner that 40 CFR 63.2493(b)(2) only applies if the facility chooses to route emissions to a non-flare control device and chooses to comply with the 1 ppmv standard via CEMS. Therefore, we are proposing to add introductory text at 40 CFR 63.2493(b)(2) that clarifies this.
40 CFR 63.2493(d)(3)	A petitioner contended that the reference to ''affected source'' should be revised to ''MCPU'' to be consistent with the second column of table 6 to subpart FFFF of part 63.	We agree with the petitioner to revise the provision for consistency with table 6 to subpart FFFF of part 63; therefore, we are proposing to replace ''affected source'' with ''MCPU.''
40 CFR 63.2493(d)(4)(v)	Provision contains a typographical error	The EPA is proposing to replace ''§ 63.2445(h)'' with ''§ 63.2445(i)'' to correct the typographical error.

TABLE 4—SUMMARY OF PROPOSED REVISIONS TO 40 CFR PART 63, SUBPART FFFF—Continued

Provision	Issue summary	Proposed revision
40 CFR 63.2493(e)	A petitioner requested the EPA clarify whether ''delay of repair'' provisions apply to equipment in ethylene oxide service. The petitioner noted that in the response to comments for the final rule the EPA stated that ''delay of repair'' provisions do not apply. However, the petitioner further noted, the final rule language did not reflect this.	We confirm that ''delay of repair'' provisions do not apply for equipment in ethylene oxide service. However, we recognize the rule language did not correctly reflect this. As such, we are proposing to revise 40 CFR 63.2493(e) to appropriately specify that the ''delay of repair'' provisions of 40 CFR part 63, subparts H and UU, and 40 CFR part 65, subpart F, do not apply.
40 CFR 63.2520(d)	A petitioner pointed out that the EPA indicated in the preamble to the final rule (85 FR 49084) that electronic reporting is required at 40 CFR 63.2520(d) for the NOCS report; however, the final rule does not contain this requirement. The petitioner requested that the EPA clarify that this was a misstatement in the preamble language and that the NOCS report is not required to be submitted electronically.	We acknowledge there was an inconsistency in what we said in the preamble about electronic reporting NOCS reports versus what we required in the final rule. However, the inconsistency is irrelevant because in this rulemaking, we are proposing at 40 CFR 63.2520(d) to require that NOCS reports be submitted electronically through the EPA's CEDRI. The proposed requirement to submit NOCS reports electronically will increase the ease and efficiency of data submittal and data accessibility. For a more thorough discussion of electronic reporting, see the memorandum, *Electronic Reporting Requirements for New Source Performance Standards (NSPS) and National Emission Standards for Hazardous Air Pollutants (NESHAP) Rules,* which is available in the docket for this rulemaking (see Docket Item No. EPA–HQ–OAR–2018–0746–0169).
40 CFR 63.2525(o)	A petitioner requested that the EPA update the recordkeeping requirements for adsorbers that cannot be regenerated and for regenerative adsorbers that are regenerated offsite to reflect the monitoring requirements in the final rule (85 FR 49084). Specifically, the petitioner requested that the EPA revise 40 CFR 63.2525(o)(1) to require that you must keep records of the breakthrough limit and bed life for each adsorber established according to 40 CFR 63.2450(e)(7)(i); revise 40 CFR 63.2525(o)(2) to require that you keep records of each outlet HAP or TOC concentration measured according to 40 CFR 63.2450(e)(7)(ii) and (e)(7)(iii); and revise 40 CFR 2525(o)(3) to require records of the date and time each adsorber is replaced. The petitioner also requested that EPA remove the requirement at 40 CFR 63.2525(o)(4) in its entirety.	In the final rule (85 FR 49084), we inadvertently did not revise the recordkeeping requirements to reflect the associated monitoring requirements in 40 CFR 63.2450(e)(7) (for adsorbers that cannot be regenerated and for regenerative adsorbers that are regenerated offsite). We are proposing to correct this by revising 40 CFR 63.2525(o)(1) and (2) and removing the requirement at 40 CFR 63.2525(o)(4) in its entirety, as recommended by the petitioner. However, we are not proposing to revise 40 CFR 63.2525(o)(3) as requested by the petitioner. We are keeping the language of 40 CFR 63.2525(o)(3) ''as is,'' which aligns with the language used in 40 CFR 63.2450(e)(7)(iii)(B).
40 CFR 63.2520(e)(2)	Provision contains a typographical error	The EPA is proposing to correct the spelling of ''paragraph.''
40 CFR 63.2450(e)(5)(iv), 63.2520(e), (f), (g), (h), and (i).	Provisions needing technical clarifications or removal	The EPA is proposing to remove duplication and point directly to 40 CFR 63.9(k) when the source is required to submit certain reports to CEDRI. Specifically, instructions for submitting reports electronically through CEDRI, including instructions for submitting CBI and asserting a claim of EPA system outage or *force majeure,* were recently added to 40 CFR 63.9(k) (85 FR 73885); therefore, text related to these requirements is no longer necessary in the MON.

4. Petroleum Refineries NESHAP

In addition to removing the *force majeure* allowance from the PRD and emergency flaring work practice standards as discussed in section III.A of this preamble, we are also proposing other amendments to Petroleum Refinery MACT 1 that are consistent with flaring provisions in other recent rules (*i.e.,* EMACT standards) that adopted the Petroleum Refinery MACT 1 flare requirements but addressed additional issues, such as adding provisions for pressure-assisted flares. The proposed amendments include adding pressure-assisted flares to the definition of the term ''flare'' in 40 CFR 63.641 and adding appropriate requirements for pressure-assisted flares in 40 CFR 63.670. These amendments are consistent with the EPA's intention that all types of flares, including pressure-assisted flares, are covered by the provisions in Petroleum Refinery MACT 1. The proposed amendments for pressure-assisted flares include pilot flame standards and requirements for cross-lighting in 40 CFR 63.670(b), pressure monitoring in 40 CFR 63.670(d)(3), higher combustion zone operating limits in 40 CFR 63.670(e), and requirements to use only the direct calculation methods for determining the flare vent gas net heating value according to 40 CFR 63.670(l)(5)(ii). We are also proposing reporting and recordkeeping requirements specific to pressure-assisted flares in 40 CFR

63.655(g)(11)(iii) and (i)(9)(vi), respectively.

Further, to provide additional flexibility to the monitoring requirements for flare gas composition as required by 40 CFR 63.670(j), we are proposing to add mass spectrometry as a method in 40 CFR 63.671. The current provisions in 40 CFR 63.671 could be interpreted to suggest that gas chromatographs must be used for flare gas compositional analysis. This was not our intent. We recognize that there are some methods, like mass spectrometry, which can determine flare gas composition without the use of a gas chromatograph. We are proposing to add specific requirements for calibration and operation of mass spectrometers that parallel the requirements for gas chromatographs.

D. What compliance dates are we proposing?

We are not proposing new compliance dates for any revisions that we are proposing for the EMACT standards, OLD NESHAP, and MON. The rules that were promulgated in 2020 have still not come into full effect and owners and operators have until July 6, 2023, to comply with the EMACT standards, July 7, 2023, for the OLD NESHAP, and August 12, 2023, for the MON. As such, owners and operators would have until those dates to comply with the proposed revisions. In addition, the proposed revisions do not impose substantial new requirements but rather provide clarity to the rules for owners and operators.

For most actions that we are proposing for the petroleum refineries NESHAP, we are positing that facilities would need some time to successfully apply these revisions, including time to: read and understand the amended rule requirements; evaluate their operations to ensure that they can meet the standards during periods of startup and shutdown, as defined in the rule; and make any necessary adjustments, including making adjustments to standard operating procedures, and convert reporting mechanisms to install necessary hardware and software. The EPA recognizes the confusion that multiple compliance dates for individual requirements would create and the additional burden such an assortment of dates would impose. From our assessment of the timeframe needed for compliance with the revised requirements, the EPA considers a period of 60 days after the effective date of the final rule to be the most expeditious compliance period practicable. Therefore, we are proposing that affected sources must be in compliance with most of the proposed revisions to the petroleum refineries NESHAP upon initial startup or within 60 days of the effective date of the final rule, whichever is later. There is one exception to this compliance period, discussed next.

We are proposing that petroleum refinery owners or operators must comply with the new operating and monitoring requirements for flares upon initial startup or by the effective date of the final rule, whichever is later. We believe that compliance with the flare requirements immediately upon finalizing the rule is necessary to ensure that pressure-assisted flares are appropriately operated.

IV. Summary of Cost, Environmental, and Economic Impacts

A. What are the affected facilities?

In our final RTRs, we estimated the following:

There are 26 facilities subject to the EMACT standards that are currently operating and five additional facilities under construction. A complete list of known facilities in the EMACT standards is available in appendix A of the memorandum, *Review of the RACT/BACT/LAER Clearinghouse Database for the Ethylene Production Source Category* (see Docket ID No. EPA–HQ–OAR–2017–0357–0008).

There are 173 OLD NESHAP facilities currently operating and four additional OLD NESHAP facilities under construction. A complete list of known OLD NESHAP facilities is available in appendix A of the memorandum, *National Impacts of the 2020 Risk and Technology Review Final Rule for the Organic Liquids Distribution (Non-Gasoline) Source Category* (see Docket ID No. EPA–HQ–OAR–2018–0746–0069).

There are 201 MON facilities currently operating. A complete list of known MON facilities is available in appendix 1 of the memorandum, *Residual Risk Assessment for the Miscellaneous Organic Chemical Manufacturing Source Category in Support of the 2019 Risk and Technology Review Proposed Rule* (see Docket Item No. EPA–HQ–OAR–2018–0746–0011).

Additionally, based on the Energy Information Administration's 2021 Refinery Capacity Report, there are 129 operable petroleum refineries in the United States (U.S.) and the U.S. territories, all of which are expected to be major sources of HAP emissions.

B. What are the air quality impacts?

We did not estimate baseline emissions or emissions reductions for the proposed revisions. None of the proposed revisions would have a direct and quantifiable impact on emissions because they are minor revisions to existing requirements.

C. What are the cost impacts?

We expect minimal to no cost impacts due to the proposed revisions. There could be minor costs for affected facilities related to reading the proposed rule, making minor updates to operating procedures in some limited cases, and making minor adjustments to reporting systems. A few proposed revisions provide slightly greater flexibility and could yield minor cost savings. Any potential costs or cost savings are expected to be negligible.

D. What are the economic impacts?

No economic impacts are anticipated due to the proposed revisions because any potential cost impacts are expected to be very minor.

E. What are the benefits?

The proposed revisions are not expected to yield air quality benefits because emissions will not be affected. However, the proposed revisions should improve clarity, monitoring, compliance, and implementation of the rules for the affected source categories.

F. What analysis of environmental justice did we conduct?

The proposed revisions are not expected to impact emissions and therefore we did not conduct an environmental justice analysis. However, environmental justice analyses were conducted for the final 2020 rules for the EMACT standards, OLD NESHAP, and MON. Further information regarding these environmental justice analyses is available at 85 FR 40415, 85 FR 40757, and 85 FR 49129, respectively.

V. Statutory and Executive Order Reviews

Additional information about these statutes and Executive Orders can be found at *https://www.epa.gov/laws-regulations/laws-and-executive-orders.*

A. Executive Order 12866: Regulatory Planning and Review and Executive Order 13563: Improving Regulation and Regulatory Review

This action is not a significant regulatory action and was therefore not submitted to the OMB for review.

B. Paperwork Reduction Act (PRA)

This action is not expected to impose any new information collection burden under the PRA for the EMACT

standards, OLD NESHAP, MON, or Petroleum Refineries NESHAP. We are proposing certain technical revisions, including new electronic reporting provisions for the PRD and emergency flaring work practice standards, but the technical revisions would not result in changes to the information collection burden. The reporting of the current PRD and emergency flaring data elements currently are typed up in a word processor and/or spreadsheet software and included in the submission to the delegated state authority and/or the EPA Regional Office. The proposed amendments would instead require facilities to submit the work practice related data using an EPA-provided spreadsheet template electronically through CEDRI. These data would not be expected to also be included in a facility's submission to the delegated state authority and/or EPA Regional Office, so no duplication is expected. The proposed amendments to the mode of reporting of the work practice related data are not expected to change the current burden under the PRA and we have not revised the information collection request (ICR) for the existing rules. OMB has previously approved the information collection activities contained in the existing regulations at: 40 CFR part 63, subpart YY, and has assigned OMB control number 2060–0489; 40 CFR part 63, subpart EEEE, and has assigned OMB control number 2060–0539; 40 CFR part 63, subpart FFFF, and has assigned OMB control number 2060–0533; and 40 CFR part 63, subpart CC, and has assigned OMB control number 2060–0340.

C. Regulatory Flexibility Act (RFA)

I certify that this action will not have a significant economic impact on a substantial number of small entities under the RFA. The proposed amendments to 40 CFR part 63, subparts CC, YY, EEEE, and FFFF would only minimally change the existing requirements for all entities. There could be minor costs for affected facilities related to reading the proposed rule, making minor updates to operating procedures in some limited cases, and making minor adjustments to reporting systems. A few proposed revisions provide slightly greater flexibility and could yield minor cost savings. Any potential costs or cost savings are expected to be negligible.

D. Unfunded Mandates Reform Act (UMRA)

This action does not contain an unfunded mandate of $100 million or more as described in UMRA, 2 U.S.C. 1531–1538, and does not significantly or uniquely affect small governments. While this action creates an enforceable duty on the private sector, the annual cost does not exceed $100 million or more.

E. Executive Order 13132: Federalism

This action does not have federalism implications. It will not have substantial direct effects on the states, on the relationship between the National Government and the states, or on the distribution of power and responsibilities among the various levels of government.

F. Executive Order 13175: Consultation and Coordination With Indian Tribal Governments

This action does not have tribal implications as specified in Executive Order 13175. It will not have substantial new direct effects on tribal governments, on the relationship between the Federal Government and Indian tribes, or on the distribution of power and responsibilities between the Federal Government and Indian tribes, as specified in Executive Order 13175. Thus, Executive Order 13175 does not apply to this action.

G. Executive Order 13045: Protection of Children From Environmental Health Risks and Safety Risks

The EPA interprets Executive Order 13045 as applying to those regulatory actions that concern environmental health or safety risks that the EPA has reason to believe may disproportionately affect children, per the definition of ''covered regulatory action'' in section 2–202 of the Executive order. This action is not subject to Executive Order 13045 because it does not concern an environmental health risk or safety risk.

H. Executive Order 13211: Actions Concerning Regulations That Significantly Affect Energy Supply, Distribution, or Use

This action is not subject to Executive Order 13211, because it is not a significant regulatory action under Executive Order 12866.

I. National Technology Transfer and Advancement Act (NTTAA)

This rulemaking involves technical standards. Therefore, the EPA conducted searches for the EMACT standards, MON, OLD NESHAP, and Petroleum Refineries NESHAP through the Enhanced National Standards Systems Network Database managed by the American National Standards Institute (ANSI). We also contacted voluntary consensus standards (VCS) organizations and accessed and searched their databases. We conducted searches for: EPA Methods 1, 1A, 2, 2A, 2C, 2D, 2F, 2G, 3B, 4, 5, 18, 21, 22, 25, 25A, 27, and 29 of 40 CFR part 60, appendix A; EPA Methods 301, 316 and 320 of 40 CFR part 63, appendix A; and EPA Methods 602 and 624 of 40 CFR part 136, appendix A.

No applicable voluntary consensus standards were identified for any of the listed methods. During the EPA's VCS search, if the title or abstract (if provided) of the VCS described technical sampling and analytical procedures that are similar to the EPA's reference method, the EPA reviewed it as a potential equivalent method.

After reviewing the available standards, the EPA determined that the 20 candidate VCS identified for measuring emissions of pollutants or their surrogates subject to emission standards in the rule would not be practical due to lack of equivalency, documentation, or validation data, or due to other important technical and policy considerations. Additional information for the VCS search and determinations can be found in the memorandum, *Voluntary Consensus Standard Results for National Emission Standards for Hazardous Air Pollutants: for Ethylene Production, Miscellaneous Organic Chemical Manufacturing, Organic Liquids Distribution (Non-Gasoline), and Petroleum Refineries,* which is available in the docket for this action.

The EPA welcomes comments on this aspect of the proposed rulemaking, and, specifically, invites the public to identify potentially applicable VCS, and to explain why the EPA should use such standards in this regulation.

J. Executive Order 12898: Federal Actions To Address Environmental Justice in Minority Populations and Low-Income Populations

Executive Order 12898 (59 FR 7629; February 16, 1994) directs federal agencies, to the greatest extent practicable and permitted by law, to make environmental justice part of their mission by identifying and addressing, as appropriate, disproportionately high and adverse human health or environmental effects of their programs, policies, and activities on minority populations (people of color and/or indigenous peoples) and low-income populations.

Because the proposed revisions are not expected to impact emissions, the EPA believes that this action is not likely to change existing disproportionate and adverse effects on

people of color, low-income populations, and/or indigenous peoples. See section IV.F of this preamble for related information regarding environmental justice analyses.

List of Subjects in 40 CFR Part 63

Environmental protection, Air pollution control, Hazardous substances, Reporting and recordkeeping requirements.

Michael S. Regan,

Administrator.

[FR Doc. 2023–07627 Filed 4–26–23; 8:45 am]

BILLING CODE 6560–50–P

ENVIRONMENTAL PROTECTION AGENCY

40 CFR Chapter I

[EPA–HQ–OPPT–2022–0923; FRL–10453–01–OCSPP]

Polyvinyl Alcohol (PVA); TSCA Section 21 Petition for Rulemaking; Reasons for Agency Response; Denial of Requested Rulemaking

AGENCY: Environmental Protection Agency (EPA).

ACTION: Petition; reasons for Agency response.

SUMMARY: On January 26, 2023, EPA received a petition from Blueland, Plastic Pollution Coalition, and partners, including Beyond Plastics, Plastic Oceans International, The Shaw Institute, Lonely Whale, 5 Gyres, Global Alliance for Incinerator Alternatives (GAIA), Oceanic Global Foundation, The Last Beach Cleanup, Rio Grande International Study Center, Inland Ocean Coalition, Occidental Arts and Ecology Center, Turtle Island Restoration Network, Friends of the Earth, Surfrider, and Made Safe. The petition requests under the Toxic Substances Control Act (TSCA) that EPA require manufacturers and processors of polyvinyl alcohol (PVA) affiliated with EPA's Safer Choice certification program to fund and conduct health and environmental safety testing using independent, third-party scientists. The petition also requests under the Administrative Procedure Act (APA) that EPA update the status of PVA on EPA's Safer Chemical Ingredients List (SCIL) from ''green circle'' to ''gray square'' until the testing is complete and reviewed by EPA. The Safer Choice program is a voluntary EPA program that certifies cleaning and other products made with ingredients that meet criteria for human health and the environment and manages these safer ingredients on the SCIL. After careful consideration, the EPA has denied the TSCA petition and APA petition requests for reasons discussed in this document.

DATES: EPA's response to the petition was signed on April 21, 2023.

ADDRESSES: EPA established a docket for this petition under docket identification (ID) number EPA–HQ–OPPT–2022–0923 which is available online at *https://www.regulations.gov*. Additional instructions on visiting the docket, along with more information about dockets generally, is available at *https://www.epa.gov/dockets*.

FOR FURTHER INFORMATION CONTACT: *For technical information contact:* Brian Barone, Data Gathering and Analysis Division (7406M), Office of Pollution Prevention and Toxics, Environmental Protection Agency, 1200 Pennsylvania Ave. NW, Washington, DC 20460–0001; telephone number: (202) 566–0233; email address: *barone.brian@epa.gov*.

For general information contact: The TSCA-Hotline, ABVI-Goodwill, 422 South Clinton Ave., Rochester, NY 14620; telephone number: (202) 554–1404; email address: *TSCAHotline@epa.gov*.

SUPPLEMENTARY INFORMATION:

I. General Information

A. Does this action apply to me?

This action is directed to the public in general. However, this action may be of particular interest to those who manufacture (including import), distribute in commerce, process, use, or dispose of polyvinyl alcohol (PVA). Since other entities may also be interested, the Agency has not attempted to describe all of the specific entities that may be affected by this action.

B. What is EPA's authority for taking this action?

Under TSCA section 21 (15 U.S.C. 2620), any person can petition EPA to initiate a proceeding for the issuance, amendment, or repeal of a rule under TSCA sections 4, 6, or 8, or to issue an order under TSCA sections 4, 5(e), or 5(f). A TSCA section 21 petition must set forth the facts which it has claimed establish that it is necessary to initiate the action requested. EPA is required to grant or deny the petition within 90 days of its filing. If EPA grants the petition, the Agency must promptly commence an appropriate proceeding. If EPA denies the petition, the Agency must publish its reasons for the denial in the **Federal Register**. A petitioner may commence a civil action in a U.S. district court seeking to compel initiation of the requested proceeding within 60 days of a denial or, if EPA does not issue a decision, within 60 days of the expiration of the 90-day period.

Under the Administrative Procedure Act (APA) section 553(e), any person may petition for a rule's issuance, amendment, or repeal. Petitions should identify the rule requested to be repealed or provide the text of a proposed rule or amendment and include reasons supporting the petition. The agency may either grant the petition, undertake public rulemaking proceedings, or deny the petition. If an agency grants a petition for rulemaking—thereby initiating an action to issue, amend, or repeal a rule per request of the petitioner—any relevant procedural requirements for rulemaking or other types of action would still apply. In the case of the full or partial denial of a petition, prompt notice is given to the interested parties. Except in affirming a prior denial or when the denial is self-explanatory, the notice shall be accompanied by a brief statement of the grounds for denial.

C. What criteria apply to the decision on the TSCA section 21 petition?

1. Legal standard regarding TSCA section 21 petitions.

TSCA section 21(b)(1) requires that the petition ''set forth the facts which it is claimed establish that it is necessary'' to initiate the proceeding requested. 15 U.S.C. 2620(b)(1). Thus, TSCA section 21 implicitly incorporates the statutory standards that apply to the requested actions. Accordingly, EPA has relied on the standards in TSCA section 21 and the provisions under which actions have been requested to evaluate this TSCA section 21 petition.

2. Legal standard regarding TSCA section 4.

TSCA section 21(a) authorizes any person to petition the Agency to ''initiate a proceeding'' for the issuance of a rule or an order under TSCA section 4. 15 U.S.C. 2620(a). To grant a petition for the testing of a chemical substance, EPA must find that the petitioners ''set forth the facts which it is claimed establish that it is necessary'' for testing under TSCA section 4(a)(1)(A)(i), TSCA section 4(a)(1)(A)(ii), or TSCA section 4(a)(1)(B). If the information the petitioner provides fails to present such facts, the petition must be denied. Additionally, if testing is initiated under TSCA section 21, TSCA section 4(h) dictates requirements for limiting testing on vertebrate animals. The specific section 4 provisions are provided in the units that follow.

a. Legal standard regarding TSCA section 4(a)(1)(A)(i) and TSCA section 4(a)(1)(A)(ii).

Under TSCA section 4(a)(1)(A)(i), in order to initiate a rule or order, EPA must find that the manufacture, distribution in commerce, processing, use, or disposal of a chemical substance or mixture, or that any combination of such activities, may present an unreasonable risk of injury to health or the environment; that information and experience are insufficient to reasonably determine or predict the effects of such activity or activities on health or the environment; and that testing of the chemical substance or mixture is necessary to develop the missing information. 15 U.S.C. 2603(a)(1)(A)(i).

Under TSCA section 4(a)(1)(A)(ii), in order to initiate a rule, EPA must find that the chemical substance or mixture is or will be produced in substantial quantities, and it enters or may reasonably be anticipated to enter the environment in substantial quantities or there is or may be significant or substantial human exposure to such substance or mixture; that information and experience are insufficient to reasonably determine or predict the effects of the manufacture, distribution in commerce, processing, use, or disposal of the chemical substance or mixture on health or the environment; and that testing of the chemical substance or mixture is necessary to develop the missing information. 15 U.S.C. 2603(a)(1)(A)(ii).

b. Legal standard regarding TSCA section 4(a)(1)(B) and relationship to TSCA section 21(b)(4).

In the case of a mixture, per TSCA section 4(a)(1)(B), EPA must also find that the effects which the mixture's manufacture, distribution in commerce, processing, use, or disposal, or any combination of such activities, may have on health or the environment may not be reasonably and more efficiently determined or predicted by testing the chemical substances which comprise the mixture. 15 U.S.C. 2603(a)(1)(B). In addition, TSCA section 21 establishes standards a court must use to decide whether to order EPA to initiate rulemaking in the event of a lawsuit filed by the petitioner after denial of a TSCA section 21 petition. 15 U.S.C. 2620(b)(4)(B). EPA believes TSCA section 21(b)(4) does not provide for judicial review of a petition to promulgate a test rule for mixtures. TSCA section 21(b)(4)(B)(i) specifies that the court's review pertains to application of the TSCA section 4 factors to chemical substances. Moreover, TSCA section 21(b)(4)(B)(i) does not contain the additional finding that TSCA section 4 requires for issuing a test rule for mixtures (that the effect may not be reasonably and more efficiently determined or predicted by testing the chemical components). Congress left the complex issues associated with the testing of mixtures to the Administrator's discretion.

c. Legal standard regarding TSCA section 4(h).

TSCA section 4(h) requires EPA to reduce and replace the use of vertebrate animals in the testing of chemical substances or mixtures, to the extent practicable, scientifically justified, and consistent with the policies of TSCA. 15 U.S.C. 2603(h).

3. Legal standard regarding TSCA section 26.

TSCA section 26(h) requires EPA, in carrying out TSCA sections 4, 5, and 6, to make a decision using ''scientific information, technical procedures, measures, methods, protocols, methodologies, or models, employed in a manner consistent with the best available science,'' while also taking into account six considerations, including the relevance of information and any uncertainties. TSCA section 26(i) requires that decisions under TSCA sections 4, 5, and 6 be ''based on the weight of scientific evidence.'' Finally, TSCA section 26(k) requires that EPA consider reasonably available information in carrying out TSCA sections 4, 5, and 6.

II. Summary of the Section 21 Petition

A. What action was requested under TSCA section 21?

On January 26, 2023, EPA received a TSCA section 21 petition (Ref. 1) from Blueland, Plastic Pollution Coalition, and partners Beyond Plastics, Plastic Oceans International, The Shaw Institute, Lonely Whale, 5 Gyres, GAIA (Global Alliance for Incinerator Alternatives), Oceanic Global Foundation, The Last Beach Cleanup, Rio Grande International Study Center, Inland Ocean Coalition, Occidental Arts and Ecology Center, Turtle Island Restoration Network, Friends of the Earth, Surfrider, and Made Safe (petitioners) to initiate a rulemaking proceeding or issue an order under the authorities afforded to EPA under TSCA section 4(a)(1), compelling health and environmental effects tests under the TSCA on PVA and ''ultimately regulate PVA used in dishwasher and laundry pods and sheets as a toxic substance, pending the results from testing'' (Ref. 1, Pg. 11). This petition specifically requests a test order be issued to those manufacturers and processors of PVA who ''are part of the EPA Safer Choice Program, have products with the EPA Safer Choice certification, and who are seeking an EPA Safer Choice certification for pods or sheets products'' (Ref. 1, pg. 11). The petitioners request that EPA require the test order recipients to fund and conduct this testing under the guidance and direction of independent, third-party scientists.

B. What support did the petitioners offer for the TSCA section 21 request?

By referencing TSCA section 4(a)(1) the petitioners assert that EPA can direct manufacturers and/or processors to test a chemical substance or mixture if all three of the following findings are made:

- The manufacture, distribution in commerce, processing, use, or disposal of a chemical substance or mixture, or that any combination of such activities, may present an unreasonable risk of injury to health or the environment or is produced in substantial quantities and it enters or may reasonably be anticipated to enter the environment in substantial quantities or there is or may be significant or substantial human exposure to such substance or mixture;
- There is insufficient information and experience upon which the effects of such manufacture, distribution in commerce, processing, use, or disposal of such substance or mixture or of any combination of such activities on health or the environment can reasonably be determined or predicted; and
- Testing of such substance or mixture with respect to such effects is necessary to develop such information.

The petitioners assert that ''Given the potential for PVA to persist in the environment as a harmful plastic pollutant, this petition requests that the EPA require health and environmental safety tests under the Toxic Substances Control Act'' (Ref. 1, pg. 11). Although not explicitly stated, EPA interprets this assertion as indicating that the petitioners believe PVA may present an ''unreasonable risk of injury to health or the environment.'' Similarly, the petitioners provide estimates of the use of PVA-wrapped laundry pods in the United States (Ref. 1, pg. 3), which EPA interprets as an assertion that PVA is ''produced in substantial quantities.'' The evidence the petitioners provide for each assertion is detailed in the units that follow.

1. May present an unreasonable risk of injury to health or the environment or produced in substantial quantities.

a. May present an unreasonable risk of injury to health or the environment.

In support of the belief that PVA may present an unreasonable risk of injury to

health or the environment, the petitioners provide some references which specifically discuss PVA, while others focus generally on microplastics (Ref. 1, pg. 5–6). Based on the references provided, the petitioners conclude that ~75% of PVA from dishwasher and laundry pods persist through conventional wastewater treatment, passing into waterways and ecosystems beyond (Ref. 1, pg. 4 and 6). Petitioners claim that PVA could bioaccumulate and potentially absorb dangerous contaminants and move those contaminants up the food chain (Ref. 1, pg. 3 and 6). Although it is not explicitly stated, from these claims the Agency infers that the petitioners believe that PVA may present an ''unreasonable risk of injury to health or the environment.''

b. May be produced in substantial quantities.

The petitioners do not directly provide a statement indicating that they believe PVA is produced in ''substantial quantities'' as discussed in TSCA section 4(a)(1). Typically, substantial quantities are defined by EPA as any production in excess of one million pounds per year (Ref. 2, pg. 6). The petition states that ''. . . over 20 billion PVA wrapped laundry and dishwasher pods are used every year in the United States alone'' (Ref. 1, pg. 3). The petition also cites a study by Rolsky and Kelkar, which estimates that ''17,200 ± 5000 metric ton units per year (mtu/yr) of PVA are used . . . [in laundry detergent pods] in the United States'' (Ref. 3, pg. 1; see also Ref. 1, pg. 6). Although it is not explicitly stated, the Agency infers through the discussion of volumes of PVA used and the discussed widespread consumer uses of soluble PVA that the petitioners believe that the soluble PVA films used in detergent pods are produced in ''substantial quantities'' and ''there is or may be significant or substantial human exposure to such substance.''

2. Insufficiency of information and experience.

The petitioners assert, ''Further research is needed to determine the potential hazards that polluted PVA can pose to ecosystems and human health'' (Ref. 1, pg. 14). To support their assertion, the petitioners did not provide evidence of a literature search or data gap analysis. However, a literature review was conducted as part of the study by Rolsky and Kelkar (Ref. 3, pg. 3) related to the fate of PVA in wastewater treatment plants. The objective of this study was to estimate the US nationwide emissions of PVA resulting from domestic use of laundry and dish detergent pods corroborated by a nationwide, online consumer survey and a literature review of its fate within conventional wastewater treatment plants (WWTPs) (Ref. 3, pg. 1). As evidence of insufficient information and experience related to the effects of PVA on health and the environment, the petitioners reference the testing methods commonly used to establish biodegradability, including Organization for Economic Cooperation and Development (OECD) 301 and OECD 310 tests for Ready Biodegradability (Ref. 1, pg. 9). The petitioners believe that these testing procedures are insufficient to evaluate biodegradation in wastewater treatment plants and assert that there are ''critical gaps between the OECD tests and real-world WWTP conditions'' (Ref. 1, pg. 10). The petitioners assert that the established OECD testing methodologies are inadequate for the evaluation of the biodegradation of PVA due to the testing conditions differing from those present in a wastewater treatment plant (Ref. 1, pg. 9–10). The petitioners also assert that the elapsed time required for PVA to degrade in these tests is not being evaluated appropriately (Ref. 1, pg. 10).

3. Need for testing.

The petitioners claim that PVA poses unknown dangers to the environment, and further research is needed to understand PVA's ability to absorb and bioaccumulate dangerous contaminants up the food chain (Ref. 1, pg. 6). Additionally, the petitioners claim that the established OECD tests for inherent biodegradation are insufficient to determine if PVA poses a risk to human health and the environment (Ref. 1, pg. 10–12).

C. What additional information did EPA receive regarding the TSCA section 21 request?

As a result of this petition, Proctor and Gamble has made available to EPA previously unreleased tests related to the biodegradability and toxicity of the forms of PVA used in detergent pods and sheets. EPA has posted this information in the petition docket, which is available to the public for review online at *https://www.epa.gov/assessing-and-managing-chemicals-under-tsca/tsca-section-21#polyvinyl.*

III. Disposition of Section 21 Response

A. What was EPA's response?

After careful consideration, EPA has denied the section 21 portion of this petition. A copy of the Agency's response, which consists of the letter to the petitioners and this document, is posted on the EPA petition website at *https://www.epa.gov/assessing-and-managing-chemicals-under-tsca/tsca-section-21#reporting.* The response, the petition (Ref. 1), and other information is available in the docket for this TSCA section 21 petition (see **ADDRESSES**).

B. What was EPA's reason for this response?

In considering the petition within the statutory 90-day petition review period, EPA evaluated the information presented or referenced in the petition and considered that information in the context of the applicable authorities and requirements contained in TSCA sections 4, 21, and 26, as previously described in Unit I.C. of this document. Also, notwithstanding that the burden is on the petitioners to present ''the facts which it is claimed establish that it is necessary'' for EPA to initiate the rule or issue the order sought, EPA nonetheless evaluated relevant information that was reasonably available to the Agency during the 90-day petition review period.

EPA finds the petitioners have not provided the facts necessary for the Agency to determine that existing information and experience are insufficient and that testing of such substance or mixture with respect to such effects is necessary to develop such information. These deficiencies, among other findings, are detailed in this document.

1. May present unreasonable risk of injury to health or the environment or produced in substantial quantities.

EPA is not opining on the sufficiency of the information presented for purposes of determining whether PVA may present unreasonable risk because the Agency finds that petitioners have not provided the facts necessary for the Agency to determine that existing information and experience are insufficient and that testing with respect to such effects is necessary to develop such information, as described in more detail later in this document. However, EPA agrees that PVA is or will be produced in substantial quantities and that there is or may be significant or substantial human exposure due to its common use in agriculture, foodstuffs, cleaning, and personal-care products. 15 U.S.C. 2603(a)(1)(A)(ii)(I).

2. Insufficiency of information in the petition.

The petition does not set forth the facts necessary to demonstrate that there is ''insufficient information and experience'' on which the effects of PVA can reasonably be determined or predicted, as TSCA section 4(a)(1) requires.

Although the petitioners point to some evidence that there is insufficient

information on soluble versions of PVA commonly used in detergent pods and sheets, the information supplied by petitioners is only a sample of the information available on the health and environmental risks potentially associated with PVA. The petitioners primarily rely on a study that models the potential extent of biodegradation of soluble versions of PVA at wastewater treatment plants, and a limited number of additional studies related to PVA and microplastics. The petitioners also assert that, ''[m]any of the tests used to determine PVA's biodegradability rely on OECD standards for biodegradability. While OECD biodegradability standards can be an important tool to determine a material's end of life implications, in the case of PVA and current conditions within WWTPs, these tests are insufficient'' (Ref. 1, pg. 14). Petitioners rely on this assertion to claim that there is a data need for biodegradability of PVA in real world scenarios to inform EPA's understanding of health and environmental effects from PVA. However, as explained in further detail in the Unit V.B.1, the OECD biodegradation test conditions are more conservative than real world conditions in WWTPs and are appropriate tools for predicting biodegradation of PVA. The petitioners have not provided the facts to show that ''there is insufficient information and experience'' per TSCA section 4(a)(1)(A)(i)(II).

Furthermore, the petitioners failed to acknowledge the nature and extent of existing data and articulate why these data are insufficient. While the petitioners point to a single study that models the potential extent of biodegradation of soluble versions of PVA at wastewater treatment plants, and a limited number of additional studies related to PVA and microplastics, they do not refer to or provide an assessment of other reasonably available health and environmental effects studies completed on the soluble versions of PVA commonly used in detergent pods and sheets. EPA performed a cursory search of publicly available databases on the endpoints raised by the petition request (*i.e.,* biodegradation, toxicity, and bioaccumulation potential of PVA) and has found that there is, at a minimum, one study assessing the biodegradation of PVA using non-OECD test guidelines, as well as multiple studies—which were not identified or considered by the petitioner—on the toxicity and bioaccumulation potential of PVA available in the public domain. These studies include, but are not limited to, materials related to the approval of PVA as a food additive, approval for use in pharmaceutical products, and approval for use in medical appliances and devices, some of which are as follows:

- ''Review of the oral toxicity of polyvinyl alcohol (PVA)'' (Ref. 4) was published in the journal Food and Chemical Toxicology in March 2003. The study investigated the toxicity of PVA in association with its use as an indirect food additive and coating agent for pharmaceutical and dietary supplement products. The study concluded that orally administered PVA has low oral toxicity, is poorly absorbed from the gastrointestinal tract, does not bioaccumulate when administered orally, and is not mutagenic or clastogenic.
- ''Assessment of Toxicity and Biodegradability of Poly(vinyl alcohol) Based Materials in Marine Water'' (Ref. 5) was published in the journal Polymers in September 2021. This study characterizes the biodegradation and ecotoxicity of PVA polymers in marine environments. The results support the limited biodegradability of PVA materials under conditions representative of a natural marine environment but also concluded that none of the tested polymers pose a relevant risk to the model marine organism used in the studies.
- ''Final Report on the Safety Assessment of Polyvinyl Alcohol'' (Ref. 6) was published in The International Journal of Toxicity in 2003. In this study, PVA was evaluated by the Cosmetic Ingredient Review Expert Panel. The study included an assessment of general biology, toxicology, mutagenicity, carcinogenicity, and a clinical assessment of the safety of PVA. The CIR Expert Panel concluded that Polyvinyl Alcohol is safe for use in cosmetic formulations.
- The European Food Safety Authority (EFSA) released its ''Opinion of the Scientific Panel on Food Additives, Flavourings, Processing Aids and Materials in Contact with Food (AFC) related to the use of polyvinyl alcohol as a coating agent for food supplements'' in 2006. (Ref. 7). In this report, EFSA provides an evaluation of PVA as a food additive. The report included an assessment of an analysis of toxicological data, the reaction and fate of PVA in food, and exposure levels to PVA through ingestion in order to assess its safety for use in food supplements. The panel concluded that the consumption of the PVA through the use as a coating agent for food supplement tablets and/or capsules at its intended use level is not a safety concern.

Specific to the petitioner's claim that there is a data gap regarding the biodegradation endpoint because OECD guidelines fail to inform real world scenarios at WWTPs, the petitioners do not provide an inventory of other biodegradation data on PVA that could potentially address the purported data need. In addition to not identifying existing studies, the petitioners have not provided facts to show why such studies or other existing resources are insufficient to inform the characterization of biodegradation of PVA in the real world at WWTPs. Because EPA, upon a cursory review, has been able to easily identify existing, reasonably available information on PVA's biodegradation and toxicity potential not mentioned in the petition, the petitioners have failed in carrying their burden of setting forth facts which are necessary to demonstrate that there is insufficient information, thereby necessitating the requested action. The petitioners do not provide evidence that a literature search of publicly available information has been completed, have not included an analysis and characterization of the results of such a literature search, and have not provided an inventory of knowledge they claim is missing from the public domain, specifically the ''health and environmental safety tests'' they claim are needed because ''there is insufficient information and experience upon which the effects of such manufacture, distribution in commerce, processing, use, or disposal of such substance or mixture or of any combination of such activities on health or the environment can reasonably be determined or predicted'' per TSCA section 4(a)(1)(A)(i)(II).

EPA finds the petitioners have not incorporated available existing information related to their request, or adequately indicated that gaps were located for data needed in order for EPA to make a decision using the best available science. Such an evaluation is necessary for EPA to carry out TSCA section 4, as provided under TSCA section 26(h).

3. Testing of such substance or mixture with respect to such effects is necessary to develop such information.

No evidence of toxicity or bioaccumulation potential for the soluble form of PVA used in detergent pods and sheets has been presented in the petition to the extent necessary to warrant EPA initiating a TSCA section 4 action. The petitioners provide no further information identifying specific gaps in the data already available to the public, or why additional testing in lieu of other data generation methods, such

as modeling or using existing analog data as read across, is necessary under TSCA section 4(a)(1)(A). The petitioners' request for ''full environmental and human health tests on both untreated and treated PVA'' also lacks specificity. For example, the petitioner did not specify the relevant PVA Chemical Abstracts Service Registry Number (CASRN) or polymer structure required for testing. EPA notes that the PVA used in consumer products and industry varies based on polymer size, degree of hydrolysis, solubility, and other physical and chemical characteristics (Ref. 4, pg. 144). These PVA structures are represented by several different CASRNs. Therefore, any requested testing should provide detail on which specific chemical substance, or category of chemical substances, testing should be conducted. In addition, the petitioners could have presented information about the types of tests that could be conducted, including some analysis of the methods that could be used to identify the data or information submitted or used, hazard thresholds recommended, and exposure estimates. The need for more specificity regarding testing requirements and a failure to identify the PVA forms that may require additional testing and studies disallows sufficient evaluation of associated data necessary to determine the need for new testing.

EPA finds the petitioners have not explained why the testing requested, as compared to other testing or other data generation methods, would provide the quality of data being sought in order for EPA to make a decision using the best available science. Such an evaluation is necessary for EPA to carry out TSCA section 4, as provided under TSCA section 26(h).

4. Request for oversight by a third party.

Regarding the petitioners' request that testing be conducted only under the guidance and direction of independent third-party scientists, EPA finds that such an oversight arrangement is not in keeping with the authority provided under TSCA section 21. *See Ctr. for Envtl. Health, et al.* v. *EPA,* No. 7:22–CV–00073–M, slip op. at 25–26 (E.D.N.C. March 30, 2023). Additionally, the petition has not demonstrated a need for additional measures ensuring the reliability of studies required under TSCA section 4 beyond that already provided in the Good Laboratory Practice Standards in 40 CFR part 792, and the petitioners provide no legal, administrative, or organizational procedures for the implementation of such oversight. Therefore, the Agency has no obligation to grant or deny this request. All test orders must be planned and completed in a manner consistent with the best available science per TSCA section 26(h). To that end, EPA conducts reviews of all testing plans, reports, and test data to ensure the validity of results. When reviewing data in response to a TSCA section 4 test order, EPA is required to consider the extent to which information, procedures, measures, protocols, and methodologies or models employed are ''reasonable for and consistent with the intended use of the information.'' EPA also must consider, per TSCA section 26(i), the extent of independent verification and peer review and ''shall make decisions under sections 4, 5, and 6 based on the weight of the scientific evidence.''

C. What were EPA's conclusions under TSCA section 21?

EPA is denying the request to initiate a rule or issue an order under TSCA section 4 because the TSCA section 21 petition does not set forth the facts necessary for the Agency to determine that existing information and experience are insufficient and testing of such substances or mixture with respect to such effects is necessary to develop such information. Therefore, the petitioners have yet to demonstrate that the rule or order they requested is necessary.

Additionally, because the authorities provided to EPA under TSCA section 4 specifically relate to test rules, enforceable consent agreements, or orders issued directly to manufacturers and/or processors of a chemical substance, any requests made under section 4 that extend beyond those statutory authorities cannot be granted. Therefore, the petitioners' request for the EPA to require third-party oversight of PVA testing, paid for by manufacturers and/or processors is outside of the authorities provided in TSCA section 4.

IV. Administrative Procedure Act Petition

A. What action was requested under Administrative Procedures Act?

The petitioners also asked EPA to change the geometric color code indicating the status of PVA on the Safer Chemical Ingredients List (SCIL) from a green circle to a gray square until the health and environmental safety testing requested in the TSCA section 21 portion of the petition is complete (Ref. 1, pg. 13–14). EPA is responding to this portion of the petition under the APA.

B. What support and rationale do the petitioners offer for the APA request?

The petitioners define PVA as ''a synthetic, petroleum-derived polymer'' with many applications and commonly ''used as a plastic film in all dishwasher and laundry pods and sheets'' (Ref. 1, pg. 3). The petitioners state that PVA ''can contribute to plastic pollution in oceans, waterways and soil . . . and may negatively impact ecosystems and the food and water supply'' (Ref. 1, pg. 3), citing Rolsky and Kelkar (Ref. 3). The petitioners also suggest that PVA meets EPA's definition of a persistent, bioaccumulative, and toxic (PBT) substance (Ref. 1, pg. 13–14).

In support of their claims, the petitioners provide information on the persistence and bioaccumulation potential of PVA. The petitioners also address marketing claims by companies regarding the use of PVA in products. The petitioners' arguments on these topics are summarized in the units that follow.

1. Persistence of PVA.

The petitioners cite research that models PVA as it travels through a wastewater treatment plant. This modeling estimates that 77 percent of PVA remains intact after passing through conventional wastewater treatment (Ref. 3; see also Ref. 1, pg. 7–8). Based on these results, the authors suggest that the incomplete degradation of PVA results in the release of PVA into the aquatic environment through WWTPs effluent and the terrestrial environment through the application of biosolids (Ref. 3).

2. Bioaccumulation of PVA.

The petitioners posit that PVA has the potential to bioaccumulate (Ref. 1, pg. 13–14). The petitioners argue that PVA has the ability to carry toxic chemicals and carcinogens up the food chain and may be present in human breast milk (Ref. 1, pg. 6). EPA notes that the source materials in the references cited by the petitioners are specific to microplastics and not relevant to the types of PVA used in Safer Choice-certified products (Ref. 3; Ref. 8; Ref. 9).

3. Marketing claims of PVA.

The petitioners also describe marketing claims made in relation to use of PVA in products. The petitioners state that many brands market products containing PVA as '' '100% biodegradable' and or '100% plastic-free' . . . [which] can mislead consumers to think these products are better for the environment than they are'' (Ref. 1, pg. 14). The petitioners further request ''that the EPA Safer Choice program review claims about PVA through the lens of truth in

advertising to ensure that consumers have accurate information about PVA and its potential environmental impacts'' (Ref. 1, pg. 14).

C. What is EPA's Safer Choice program?

Safer Choice is a voluntary EPA program that certifies cleaning and other products made with ingredients that are safer for human health and the environment. Importantly, the Safer Choice program identifies safer ingredients by functional use within a product formulation and does not describe any chemicals, ingredients, or products as ''safe.'' EPA reviews every chemical within a product, regardless of use level, against the Safer Choice Standard and its applicable functional class criteria. Under the Safer Choice Standard, the Safer Choice criteria define data requirements and toxicity thresholds for a chemical to be considered low concern or best in class for a given functional use. Chemicals that meet EPA's Safer Choice criteria are eligible for listing on SCIL. The Safer Choice Standard also contains requirements (*e.g.,* use limits) for the chemical's use in a product or formulation.

EPA lists chemicals on the SCIL by CASRN. The CASRN-level listing of ingredients on SCIL is one tool that can help manufacturers as they formulate products with safer chemicals that may be eligible for Safer Choice certification. Manufacturers may not use chemicals from SCIL in Safer Choice-certified products unless those SCIL chemicals also meet the requirements of the Safer Choice Standard.

In some cases, a single CASRN may cover a broad range of chemical structures. For example, for a given polymer listing, a CASRN might cover a range of structures and chain lengths. Similarly, for a given surfactant listing, a single CASRN might cover varying degrees of ethoxylation and propoxylation. When considering a product for Safer Choice certification, EPA requires complete disclosure of the name(s), CASRN(s), and concentration(s) of all chemicals in a formulation. If a proposed formulation includes a SCIL chemical with a CASRN that covers a broad range of chemical structures, EPA also requires disclosure of the structure(s) under the CASRN associated with that chemical. EPA evaluates data associated with these specific structures and allows use of only chemicals with structures that meet both the Safer Choice Standard and criteria to be used in Safer Choice-certified products.

1. PVA applicability in the Safer Choice program.

The structure and function of PVA can vary depending on how the chemical is synthesized. PVA is generated by hydrolyzing polyvinyl acetate—converting acetates to alcohols—resulting in either partially hydrolyzed or fully hydrolyzed PVA. The extent of hydrolysis, polymer size, and monomer arrangement impart physical-chemical properties that impact the polymer's functionality, water solubility, degradation potential, and other characteristics.

Optimum solubility in cold water is typically observed in PVA with a degree of hydrolysis between 87 to 89 mole percent and molecular weights between 25,000 and 100,000 Daltons. In contrast, fully hydrolyzed, high-molecular-weight PVA is highly crystalline and insoluble in cold water (Ref. 10). Manufacturers choose the grade of PVA for a given product based on function and other properties. To facilitate this choice, manufacturers usually characterize PVA using properties linked to structure, such as degree of hydrolysis and viscosity.

The petitioners do not specify PVA by CASRN, structure, grade, or specification in the petition. The petitioners do state, however, that their request is targeted at ''PVA used in laundry and dishwasher detergent pods and sheets as these are product categories relevant to the EPA Safer Choice program'' (Ref. 1, pg. 1). Based on this description of the type of PVA of interest to the petitioners, EPA understands that the request to mark PVA with a grey square on the SCIL is specific to two relevant CASRNs listed on SCIL that cover chemicals used in Safer Choice-certified products. EPA relies on this understanding throughout the remainder of the response. On SCIL, the PVA polymeric structures of interest to the petitioners are represented under CASRN 25213–24–5 (preferred Chemical Abstract Index Name: Acetic acid ethenyl ester, polymer with ethenol) and CASRN 9002–89–5 (preferred Chemical Abstract Index Name: Ethenol, homopolymer). The PVA structures allowed in Safer Choice-certified products, and which support the CASRN listings on SCIL range from 87 to 89 mole percent hydrolyzed with an average molecular weight ranging from 70,000 to 215,000 Daltons. The Safer Choice program allows use of only the PVA structures represented under CASRN 25213–24–5 and CASRN 9002–89–5 that are also associated with data demonstrating the chemical(s) meet(s) the Safer Choice Standard and criteria.

2. Safer Choice Program criteria for polymers.

The Safer Choice Master- and Functional-Class Criteria, available at *https://www.epa.gov/saferchoice/safer-choice-standard,* documents allowable toxicity thresholds for ingredients that are acceptable for use in Safer Choice-certified products. Within ''functional classes,'' many ingredients share similar toxicological and environmental fate characteristics. Recognizing this similarity, the Safer Choice program was able to focus its criteria—and its ingredient review—on the environmental and health characteristics of concern within a functional class. This approach allows EPA to distinguish the safest chemicals in each functional class and allows manufacturers to use ingredients with lower hazard profiles while formulating high-performing products.

The criteria for polymers are listed in EPA's Safer Choice Criteria for Colorants, Polymers, Preservatives, and Related Chemicals, available at *https://www.epa.gov/saferchoice/safer-choice-criteria-colorants-polymers-preservatives-and-related-chemicals,* and includes toxicological thresholds and data requirements polymers must meet to be eligible for use in Safer Choice-certified products. The following requirements in the criteria for environmental toxicity and fate endpoints are relevant to the petitioners' request:

- *Limitation on Persistent, Bioaccumulative and Toxic chemicals:* Acceptable chemicals must not be persistent (half-life >60 days), bioaccumulative (BCF/BAF ≥1,000), and aquatically toxic (LC/EC50 ≤10 mg/L or NOEC/LOEC ≤1 mg/L);
- *Limitation on very Persistent and very Bioaccumulative chemicals:* Acceptable chemicals must not be very persistent (half-life >180 days or recalcitrant) and very bioaccumulative (>5,000); and
- *Limitation on very Persistent and very Toxic chemicals:* Acceptable chemicals must not be very persistent (half-life >180 days or recalcitrant) and very aquatically toxic (LC/EC50 <1.0 mg/L or NOEC/LOEC <0.1 mg/L).

The Safer Choice criteria also requires polymers to be screened against authoritative lists (specified in EPA's Safer Choice Master Criteria, available at *https://www.epa.gov/saferchoice/safer-choice-master-criteria-safer-chemical-ingredients*) for acute mammalian toxicity, repeated dose toxicity, carcinogenicity, genetic toxicity, reproductive and developmental toxicity, neurotoxicity, respiratory sensitization, and skin sensitization. Acceptable polymers must have low concern characteristics. See EPA's Safer

Choice Criteria for Colorants, Polymers, Preservatives, and Related Chemicals available at *https://www.epa.gov/saferchoice/safer-choice-criteria-colorants-polymers-preservatives-and-related-chemicals.*

When necessary, EPA reviews information on chemicals or suitable analogs against the criteria using a weight-of-evidence (WOE) approach. For this WOE approach, EPA prefers experimental data but also considers estimated measures of fate and toxicity from predictive tools that are based on a chemical's physical/chemical properties and structural and/or biological similarity to known chemicals of concern. EPA's Safer Choice Master Criteria, available at *https://www.epa.gov/saferchoice/safer-choice-criteria-colorants-polymers-preservatives-and-related-chemicals,* outlines preferred toxicological test methods for the data used in Safer Choice chemical reviews. The preferred test methods include OECD Guideline studies, which are accepted internationally by professionals in environmental advocacy groups, industry, academia, and government as standard methods for characterizing chemicals. These Guidelines are updated as needed to ensure they reflect the latest science and techniques, in consultation with experts from regulatory agencies, academia, industry, and environmental and animal welfare organizations, and available at *https://www.oecd-ilibrary.org/environment/oecd-guidelines-for-the-testing-of-chemicals_72d77764-en.* The preferred test methods also include EPA OPPT Test Guidelines that were developed in consideration of the guidelines published by the OECD, available at *https://www.epa.gov/test-guidelines-pesticides-and-toxic-substances.* Standardized methods and guidelines are essential for proper comparison of chemical hazard profiles and to identify those that are considered safer.

V. Disposition of the APA Portion of the Petition

A. What was EPA's response?

EPA has considered the evidence presented by petitioners and is denying the request to remove PVA from SCIL for two reasons: (1) The petition does not demonstrate that PVA fails to meet the Safer Choice criteria, and (2) The data cited and explained in this unit indicate that the PVA structures allowed for use in Safer Choice-certified products under the EPA Safer Choice Standard meet the criteria of the program. The petition cites five blogs and eight peer-reviewed journal articles. Most of these focus on the environmental impacts of microplastics rather than the soluble PVA used in Safer Choice-certified products. EPA identified additional peer-reviewed literature not discussed in the petition that is relevant to the PVA structures used in Safer Choice-certified products.

B. What was EPA's reason for this response?

The petitioners cite a portion of the Safer Choice Criteria for Colorants, Polymers, Preservatives, and Related Chemicals and write that ''if a polymer does break down into PBTs, it should be excluded from the EPA Safer Chemical list [sic]'' (Ref. 1, pg. 13). ''PBT'' in this text stands for persistent, bioaccumulative, and toxic chemical substances (86 FR 894, January 6, 2021 (FRL–10018–88)). EPA will address the persistence, bioaccumulation, and toxicity endpoints individually and explain that the PVA used in Safer Choice-certified products is not a ''PBT'' in the units that follow.

1. Persistence of PVA.

The petitioners state that ''dissolved PVA enters WWTPs but ~75 percent exits WWTPs intact'' (Ref. 1, pg. 7). The referenced Rolsky paper more specifically references the potential for PVA to persist within the environment with an estimated 77 percent of PVA (61.2 percent via biosolid sludge and 15.7 percent via wastewater effluent) remaining intact after wastewater treatment (Ref. 3, pg. 10). The petitioners also state that ''in conventional WWTPs within the United States, specific PVA-adapted bacteria and microbes are needed to aid in the near to complete degradation of PVA, though they are not likely present'' (Ref. 3, pg. 7; see also Ref. 1, pg. 7).

The Rolsky and Kelkar study does not use measured data and instead estimates or models the WWTPs emission of PVA into the environment. Through the following examples, EPA explains why the study has limited relevance to the specific PVA polymer structures allowed for use in Safer Choice-certified products (Ref. 3).

A first example is that the model assumes low degradation efficiencies in WWTPs, with 20 percent biodegradation in aerobic sludge and 10 percent in anaerobic sludge. These values were taken from studies on PVA in textile wastewaters and highly crystalline starch and PVA blends used in food packaging materials (Ref. 11; Ref. 12). Blends such as these behave very differently from the soluble PVA structures used in detergent applications and are not used in Safer Choice-certified products.

A second example is the assumptions Rolsky and Kelkar (Ref. 3) make about microbial communities in WWTPs. The authors include summaries of studies with higher biodegradation values in supplementary Table S1, but disregard these values based on an assumption that PVA degrading bacterial species would only be found in textile wastewaters and would not be found in conventional WWTPs (Ref. 3, pg. 7). This is not a valid assumption. Recent standard ready biodegradation tests that use unacclimated inoculum show degradation of PVA, demonstrating that competent organisms are present in conventional WWTPs where the inocula are collected (Ref. 13; Ref. 14).

A third example relates to Rolsky and Kelkar's assumption about sorption of PVA to solids. The authors' model assumes a removal efficiency of 30 percent in the primary clarifier and 75 percent in the secondary clarifier based on sorption to biosolids (Ref. 3 and 15). EPA expects less sorption to solids for the specific PVA structures used in Safer Choice-certified products based on the physical-chemical properties of these water-soluble PVA structures (Ref. 16; Ref. 17).

In summary, Rolsky and Kelkar did not address a range of factors that are critical to the fate of PVA used in detergent films and PVA allowed in Safer Choice-certified products. These factors are associated with the structure of the chemical and include degree of polymerization, degree of hydrolysis, tacticity of the main chain (regular or irregular stereochemical configuration), ethylene content, and 1,2-glycol content (Refs. 3, 16; and 18).

The petitioners state that guideline ready biodegradation tests (*i.e.,* OECD 301 series and OECD 310) ''evaluate the biodegradability of PVA, typically in laboratories, under the most optimal circumstances [and] in real world scenarios within conventional WWTPs, neither the conditions in the lab nor the amount of time needed for PVA to fully biodegrade are likely to be met'' (Ref. 1, pg. 9). Guideline OECD tests for ready biodegradation and their EU and EPA equivalent tests are not intended to mimic WWTPs. Ready biodegradation tests are designed to be conservative screening tests, with conditions that reflect a compromise between ''real world'' scenarios and what is practical and economical to ensure consistency. Although the OECD 301 series tests were not significantly updated since 1992, they have undergone review by OECD, both in 1995 and 2006 (Ref. 19; Ref. 20).

Because ready biodegradation tests are not simulations of WWTPs, the test

duration and biodegradation time are not directly analogous to WWTP conditions. The test conditions in ready biodegradation tests are less optimized to promote biodegradation and therefore more conservative than real world conditions in WWTPs. Ready biodegradation test inoculum, which per the testing protocol are unacclimated, have microorganism cell densities that are up to 10,000 times less concentrated than in WWTPs, resulting in a higher food-to-microorganism ratio (Ref. 19; Ref. 21). Ready biodegradation tests are run for 14–28 days to encourage microbial population to acclimate and grow to a sufficient level before consumption of test substances (Ref. 20).

The Safer Choice Master Criteria states that the preferred testing methods for screening chemicals for persistence in the Safer Choice program are OECD Guideline tests for ready biodegradability. Compounds that pass ready biodegradation tests (*i.e.,* meet the designated pass levels, such as 70 percent removal of DOC, within the 28-day period of the test) are understood to be completely removed within WWTPs (Ref. 19, pg. 70; Ref. 22 and 23). The Agency acknowledges that degradation potential may vary by PVA structure and across different environments (*e.g.,* terrestrial vs. aquatic; WWTPs vs. textile and paper mill effluents) based on the presence of specific microorganisms. However, the claim that PVA ''does not fully biodegrade due to the conditions in most wastewater treatment plants'' (Ref. 1, pg. 4) (*i.e.,* lack of microorganisms adapted to PVA) is unlikely to be correct because PVA biodegradation in activated sludge inoculum is well supported and discussed later in this unit. The inoculum allowed in the OECD Guideline tests for ready biodegradation may be derived from activated sludge, unchlorinated sewage effluents, surface waters and soils, or a mixture of these sources, available at *https://www.oecd-ilibrary.org/environment/test-no-301-ready-biodegradability_9789264070349-en.* The OECD Guidelines allow for pre-conditioning of the inoculum to the experimental conditions (*e.g.,* aerating activated sludge in mineral medium or secondary effluent for 5–7 days at the test temperature), but do not allow for inoculum to be pre-adapted to the test substance (*i.e.,* PVA) (Ref. 20).

The Agency identified peer-reviewed literature using OECD Guideline studies (Ref. 14) showing PVA chemical structures used in laundry detergent packets are readily biodegradable. The study measured the persistence of four different PVA structures, with molecular weights ranging from 10,000–130,000 Daltons and degrees of hydroxylation of 79 mole percent and 88 mole percent, using OECD 301B Guidelines to determine ready biodegradability of the structures (Ref. 14). The inoculum used in the study was activated, non-adapted sludge collected from a WWTP receiving greater than 90 percent domestic sewage in Fairfield, OH. The results indicated that the four PVA structures showed greater than 75 percent CO_2 evolution after 28 days and greater than 87 percent CO_2 evolution after 60 days, demonstrating that these four materials met the OECD 301B Guideline pass levels and are considered readily biodegradable (Ref. 14). Additionally, the study tested the same four PVA structures, using the same type of inoculum described previously, following OECD 302B Guidelines to determine inherent biodegradability of the structures. The results indicated greater than 88 percent CO_2 evolution after 28 days, showing all four structures are also considered inherently biodegradable (Ref. 14). Furthermore, additional studies of detergent formulations and films containing PVA suggest ultimate biodegradation following OECD Guidelines and have half-lives less than 60 days (Ref. 13; Ref. 24).

According to the Safer Choice Criteria for Colorants, Polymers, Preservatives, and Related Chemicals, for a chemical to be classified as persistent or as very persistent, the half-life must be greater than 60 days or greater than 180 days, respectively. EPA notes that chemicals that pass ready biodegradation tests are projected to have half-lives of a few hours in sewage treatment plant sludges and half-lives of a few days in water (Ref. 25). EPA has reviewed the available modeled and experimental data, and EPA believes that the weight of the scientific evidence supports EPA's determination that the PVA structures used in Safer Choice certified products have a half-life of less than 60 days (*i.e.,* does not meet the criterion to be classified as persistent or very persistent). Thus, the data supports the continued listing of PVA CASRN 25213–24–5 and CASRN 9002–89–5 on SCIL.

2. Bioaccumulation of PVA.

Bioaccumulation describes a process by which an organism accumulates chemical substances across various routes of exposure. Bioaccumulation is typically evaluated using the Bioaccumulation Factor (BAF). The Bioconcentration Factor (BCF) can be used as part of a weight-of-evidence approach when BAF information is not available. EPA's Safer Choice program classifies chemicals with BCF or BAF value greater than 1000 as bioaccumulative, as listed on the Safer Choice Criteria for Colorants, Polymers, Preservatives, and Related Chemicals at *https://www.epa.gov/saferchoice/safer-choice-criteria-colorants-polymers-preservatives-and-related-chemicals.* Water solubility is factored into BAF and BCF calculations. Chemicals with high water solubility have an affinity to remain in water versus bioconcentrating and bioaccumulating in biota (Ref. 26).

The petitioners contend that PVA can bioaccumulate, but do not provide any evidence on specific PVA structures relevant to the Safer Choice program (Ref. 1, pg. 6 and 9). In a Guideline bioaccumulation study conducted by Japan's National Institute of Technology and Evaluation (NITE), researchers exposed Rice fish (Oryzias latipes) to two concentrations of a PVA structure (MW approximately 77,000 Daltons, reported to be water soluble, and in the range of PVA types used in detergent film applications) dissolved in the test water for 6 weeks (Ref. 27). NITE performed the study using guidelines that measured the concentration of the PVA substance in test water and in the fish to calculate the steady state BCF. The results demonstrate a BCF value less than 10 for both concentrations, which provides strong evidence that water soluble PVA structures have low concern for bioaccumulation and invalidates the petitioners' contention.

The petitioners submitted two biomonitoring studies identifying microplastics in human breast milk and placenta (Ref. 8; and 28). Both studies included compositional analyses that classify the types of microplastics found in these tissues, and noted the presence of primarily polyethylene, polypropylene, polyvinyl chloride, and plastic additives such as pigments. Ragusa *et al.* (Ref. 8) also found that PVA accounted for 2 percent of the total microplastic composition and that ''no films or fibres were identified'' in breast milk. While these results demonstrate the presence of insoluble microplastics in human tissue, they do not indicate bioaccumulation of water soluble PVA structures. As noted in the previous section, the PVA structures used in Safer Choice-certified detergent products are highly water-soluble, have low potential to bioaccumulate in biota, and do not meet the European Chemicals Agency's (ECHA) definition of a microplastic. The ECHA describes microplastics as insoluble and nonbiodegradable solid particles measuring less than 5 mm (Ref. 29).

3. Potential for PVA to mobilize and transport other pollutants.

The petitioners also state that PVA may act as a vector to adsorb heavy metals and other pollutants (Ref. 1, pg. 9). Studies referenced in Rolsky and Kelkar report increased sorption of other pollutants in degraded solid microplastics (Refs. 3, 30; and 31). The authors state degraded microplastics may have a greater affinity for sorption to other pollutants, resulting in increased mobility of contaminants. Degraded microplastics may sorb other pollutants through various mechanisms such as through the formation of surface defects on the degraded microplastic particles that can trap other pollutants, or through an increase in the number of polar functional groups on the particle surfaces, which can enhance interactions with other polar pollutants (Ref. 30; Ref. 31). The petitioners' references are specific to microplastics and not relevant to soluble PVA structures in the Safer Choice program.

The petitioners argue that PVA also has the potential to ''mobilize heavy metals from sediments to water resources'' (Ref. 1, pg. 14). Rolsky and Kelkar's statement is based on evidence of PVA-based composite hydrogels removing heavy metals from wastewater (Ref. 3 and 32). Additives used in PVA-based blends, such as PVA-based composite hydrogels, can influence the sorption and bioaccumulation potential of PVA structures by altering the overall physical-chemical properties of the ingredient. EPA's Safer Choice program classifies a PVA-based composite hydrogel as an ingredient (made up of multiple chemicals). EPA organizes SCIL by CASRNs and does not include ingredients. For product certification, the Safer Choice program reviews every chemical within an ingredient (*e.g.,* impurities, residuals, stabilizers, etc.), regardless of use level, against the Safer Choice Standard, available at *https://www.epa.gov/saferchoice/safer-choice-standard,* and applicable functional class criteria. All components of an ingredient must meet the Safer Choice Standard and criteria to be used in Safer Choice-certified products. PVA-based composite hydrogels have never been reviewed for certification by the Safer Choice program and are different from and not relevant to the PVA structures and applications (*e.g.,* detergent packets) in question for this petition.

The petitioners' concerns over bioaccumulation and transport of other pollutants up the food chain appear to be based on microplastic pollution research with the assumption that PVA will degrade into microplastics. The PVA structures used in detergent films in Safer Choice-certified products do not degrade into microplastics; rather they degrade via successive oxidation and cleavage steps, producing shorter hydroxy, carboxy, and carbonyl-substituted products that are also water soluble (Ref. 13).

4. Toxicity of PVA.

The petitioners state that PVA ''can contribute to plastic pollution'' and that ''plastic pollution can inflict substantial harm to aquatic and marine environments'' (Ref. 1, pg. 3 and 5).

In addition to persistence and bioaccumulation, the Safer Choice Criteria for Colorants, Polymers, Preservatives, and Related Chemicals require toxicity data on aquatic organisms and human health to be considered for the Safer Choice program. The petitioners argue that the requirements in the criteria—*i.e.,* that a polymer must not break down into PBT substances—are not met for PVA and therefore should be excluded from the SCIL (Ref. 1, pg. 14). While the petitioners do not provide environmental and human health toxicity data relevant to the endpoints listed in the Safer Choice Criteria for Colorants, Polymers, Preservatives, and Related Chemicals in the petition, to substantiate these statements, the Agency believes there is sufficient toxicity information available on PVA structures used in Safer Choice-certified products to meet the program's criteria for low concern.

a. Aquatic toxicity of PVA.

The Agency identified toxicity studies measuring the effects on aquatic organisms of the subset of PVA structures that are used in detergent packets. Meier *et al.* (Ref. 24) performed aquatic toxicity testing using a raw material based on PVA that is a component of a liquid laundry detergent formulation. Additional information on the structures was not provided in the publication and the Agency is unable to confirm the PVA-based material is a film. The results indicated the potential for high concern for algal toxicity (EC50 = 1–10 mg/L based on an OECD 201 guideline study) and high concern for invertebrate toxicity (IC50 = 1–10 mg/L based on an OECD 202 guideline study) (Ref. 24).

The Agency has also reviewed aquatic toxicity data from companies to support the weight-of-evidence approach for the Safer Choice program's evaluation of the PVA structures. Proctor and Gamble (P&G) submitted supporting data on PVA structures used in their detergent films (molecular weight of 130,000 Daltons with 88 mole percent degree of hydrolysis) to EPA after this petition was filed. While the P&G PVA films are not Safer Choice-certified, the structures of the PVA in these films are relevant to the films used in Safer Choice-certified products. The data included an acute fish embryo toxicity study following OECD 236 Guidelines, an acute algal inhibition assay following OECD 201 Guidelines, and an acute invertebrate study following OECD 202 Guidelines on a PVA structure used in P&G detergent packets. The 96-hour algal inhibition study demonstrated no effects on growth or biomass at concentrations greater than 100 mg/L in Raphidocelis subcapitata. The 48-hour invertebrate study demonstrated no effects on mortality, resulting in an EC50 >100 mg/L. These results suggest low potential for algal and invertebrate aquatic toxicity, which differs from the results reported by Meier *et al.* (2013) (Ref. 24). The 96-hour Danio rerio fish embryo toxicity study submitted by P&G demonstrated an LC50 >100 mg/L.

Another supplier submitted an acute toxicity test to the Safer Choice program. This acute toxicity test on freshwater fish followed OECD 203 guidelines and demonstrated low aquatic toxicity for a PVA film used in Safer Choice-certified products. Guideline studies are available for PVA structures used in detergent film used in both Safer Choice certified products and other products across multiple suppliers. These studies suggest variable aquatic toxicity for algae and invertebrate, and low toxicity for fish. Note that the Meier study showing toxicity for PVA does not include details on the specific PVA structure tested. We have included consideration of these results to be conservative in our weight of the scientific evidence approach.

b. Human health toxicity of PVA.

PVA does not carry an EU Hazard or Risk Phrase for any of the human health endpoints identified in Safer Choice criteria and is not included on authoritative lists as a known or suspected carcinogen, mutagen, or reproductive toxicant. Additionally, for applications in pesticide formulations used for food animals, including polyvinyl acetate-polyvinyl alcohol copolymers with MW >50,000 daltons used in water soluble film, EPA established a pesticides tolerance exemption on the basis that PVA was poorly absorbed, showed a lack of carcinogenic effects, and was cleared as a food additive (59 FR 76, April 20, 1994 (FRL–4769–6)). While data is limited, human health hazards for PVA structures used in Safer Choice certified are not expected based on read across to other PVA structures.

5. EPA's Safer Choice evaluation of persistence, bioaccumulation, and toxicity endpoints for polymers.

To meet the Safer Choice Criteria for Colorants, Polymers, Preservatives, and Related Chemicals, a chemical must not be ''persistent, bioaccumulative and toxic'', ''very persistent and very toxic'', or ''very persistent and very bioaccumulative'', available at *https://www.epa.gov/saferchoice/safer-choice-criteria-colorants-polymers-preservatives-and-related-chemicals.* In Unit IV.B., the Agency provides evidence that the PVA structures listed on SCIL do not meet the criteria to be considered ''persistent'', ''very persistent'', ''bioaccumulative'', or ''very bioaccumulative.'' Two of the three conditions (persistence and bioaccumulation) that must be met for a chemical to be characterized as a ''PBT'' are not met by the subset of PVA structures used in Safer Choice-certified products. Therefore, these structures do not meet the criteria to be classified as an ''PBT'' chemical. If only the most conservative aquatic toxicity data were considered (Meier *et al.* (2013) (Ref. 24), the PVA structures would be classified as ''toxic'' (characterized by an LC/EC50 values less than 10 mg/L) to algae and invertebrates, but still meet Safer Choice criteria due to the mitigation of aquatic toxicity through rapid biodegradation. These aquatic toxicity values do not meet the criteria for ''very toxic'' (characterized by an LC/EC50 value less than 1 mg/L). As a result, the PVA structures that form the basis for listing on the SCIL and are used in Safer Choice-certified products also do not meet the criteria of ''very persistent and very toxic.'' The weight of evidence for environmental toxicity and fate demonstrates that PVA meets the Safer Choice Criteria for Colorants, Polymers, Preservatives, and Related Chemicals.

6. Marketing claims of PVA.

The petition finally requests ''the EPA Safer Choice program review claims about PVA through the lens of truth in advertising to ensure that consumers have accurate information about PVA and its potential environmental impacts'' (Ref. 1, pg. 14). As part of the Safer Choice product submission, companies must provide complete ingredient disclosures and product labels for review. Safer Choice evaluates environmental marketing claims on the proposed product label and website, encouraging partners to comply with Federal Trade Commission (FTC) Guidelines. Any language or claims made on or associated with Safer Choice-certified products are subject to FTC regulations and must be supportable. Under the Green Guides, the FTC recognizes that marketers make unqualified degradability claims, which are prohibited unless they have ''competent and reliable scientific evidence that the entire product or package will completely break down and return to nature within a reasonably short period of time after customary disposal,'' typically one year (Ref. 33). When certifying products, EPA does not substantiate label claims unless they are supported by the Safer Choice Standard. Examples of claims generally not substantiated by the standard include ''environmentally safe,'' ''100 percent biodegradable,'' or ''100 percent plastic-free.'' EPA requests that partners remove such claims from the product and marketing materials before EPA grants a Safer Choice certification.

Additionally, the petitioner states, ''PVA is currently on the Safer Choice Program's Safer Chemicals Ingredients List with a green circle, suggesting to consumers that the PVA plastic film encasing laundry and dishwasher pods is safe for people and the environment, and does not have any adverse impacts on the planet'' (Ref. 1, pg. 4). The Safer Choice program uses the Safer Choice Standard and relevant criteria to identify ingredients that are safer for their functional use within a product formulation and does not use the term ''safe'' to describe any chemicals, ingredients, or products.

C. What are the conclusions under the APA portion of the petition?

EPA evaluated the information presented in the APA portion of this petition and identified additional information relevant to the PVA structures allowed for use in Safer Choice-certified products and that form the basis for listing on SCIL. The clear weight of the evidence presented in this **Federal Register** notice demonstrates that the PVA structures allowed in Safer Choice-certified products meet the Safer Choice Criteria for Colorants, Polymers, Preservatives, and Related Chemicals. Specifically, the PVA structures in Safer Choice-certified products that are the subject of this petition are not ''PBT'' substances, ''very persistent and very bioaccumulative'' substances, or ''very persistent and very toxic'' substances, and are expected to be of low concern for human health. The Agency therefore denies the request in the APA portion of this petition to change the status of PVA on the SCIL. The petition did not provide adequate information to demonstrate that the PVA structures used in Safer Choice-certified products and that form the basis for listing on SCIL do not meet the Safer Choice Criteria for Colorants, Polymers, Preservatives, and Related Chemicals, in light of the evidence supporting such use and listing identified by EPA.

While EPA is denying the APA portion of this petition, EPA does appreciate the petitioners' concerns, especially related to plastic pollution and microplastics. Past efforts for transparency relevant to the concerns stated by the petitioners are reflected in the Safer Chemical Ingredients List. SCIL includes a caveat for polymers as follows: ''Note for Polymers: The hazard profile of a polymer varies with its structure. Manufacturers using CAS numbers in this functional class may need to provide additional information for Safer Choice review'', available at *https://www.epa.gov/saferchoice/safer-ingredients#searchList.*

VI. References

The following is a listing of the documents that are specifically referenced in this document. The docket includes these documents and other information considered by EPA, including documents that are referenced within the documents that are included in the docket, even if the referenced document is not physically located in the docket. For assistance in locating these other documents, please consult the technical person listed under **FOR FURTHER INFORMATION CONTACT.**

1. Yoo, S.J., and Cohen, D. 2023. Petition to Request Health and Environmental Testing and Regulation on Polyvinyl Alcohol Under the Toxic Substances Control Act and an Update to the Chemical Safety Status of Polyvinyl Alcohol on the EPA's Safer Chemical Ingredients Lists.
2. EPA. 1993. TSCA Section 4(a)(1)(B) Final Statement of Policy Notice (58 FR 28736, May 14, 1993 (FRL–4059–9).
3. Rolsky, C., and Kelkar, V. 2021. Degradation of Polyvinyl Alcohol in US Wastewater Treatment Plants and Subsequent Nationwide Emission Estimate. Int. J. Environ. Res. Public Health, 18: 6027. *https://www.mdpi.com/1660-4601/18/11/6027.*
4. DeMerlis C.C., and Schoneker D.R. 2003. Review of the oral toxicity of polyvinyl alcohol (PVA). Food Chem Toxicology, 41(3):319–26. March 2003. *https://doi.org/10.1016/s0278-6915(02)00258-2.*
5. Alonso-López, O., López-Ibáñez, S., and Beiras, R. 2021. Assessment of Toxicity and Biodegradability of Poly(vinyl alcohol)-Based Materials in Marine Water. Polymers, 13, 3742. *https://www.mdpi.com/2073-4360/13/21/3742.*
6. Nair, B. 1998. Final Report on the Safety Assessment of Polyvinyl Alcohol. International Journal of Toxicology, 17:5_suppl, 67–92. *https://doi.org/10.1177/109158189801700505.*
7. European Food Safety Authority. 2002. Opinion of the Scientific Panel on Food Additives, Flavourings, Processing Aids

and Materials in Contact with Food (AFC) related to the use of polyvinyl alcohol as a coating agent for food supplements. Question number EFSA–Q–2005–017. EFSA Journal, 4(2), 294: 1–15. *https://doi.org/10.2903/j.efsa.2006.294.*

8. Ragusa, A. *et al.* Raman 2022. Microspectroscopy Detection and Characterisation of Microplastics in Human Breastmilk. Polymers, 14 (13): 2700. *https://doi.org/10.3390/polym14132700.*
9. Lim, X. 2021. Microplastics Are Everywhere—but Are They Harmful? Nature, 593 (7857): 22–25. May 2021. *https://www.nature.com/articles/d41586-021-01143-3.*
10. Amann M., and Minge, O. 2011. Biodegradability of Polyvinyl acetate and Related Polymers. Advances in Polymer Science, 245: 137–172. *https://doi.org/10.1007/12_2011_153.*
11. Kumar, K., *et al.* 2014. Effect of mixed liquor volatile suspended solids (MLVSS) and hydraulic retention time (HRT) on the performance of activated sludge process during the biotreatment of real textile wastewater. Water Resources and Industry, 5, 1–18. *https://doi.org/10.1016/j.wri.2014.01.001.*
12. Russo, M.A., *et al.* 2009. The anaerobic degradability of thermoplastic starch: Polyvinyl alcohol blends: Potential biodegradable food packaging materials. Bioresource Technology, 100(5), 1705–1710. *https://doi.org/10.1016/j.biortech.2008.09.026.*
13. Byrne, D. *et al.* 2021. Biodegradability of Polyvinyl Alcohol Based Film Used for Liquid Detergent Capsules. Tenside Surfactants Detergents, 58(2), 88–96. *https://doi.org/10.1515/tsd-2020-2326.*
14. Menzies, J. *et al.* 2023. Water-soluble polymer biodegradation evaluation using standard and experimental methods. Science of The Total Environment, 858(3). *https://doi.org/10.1016/j.scitotenv.2022.160006.*
15. West, A.W. 1973. Operational Control of The Return Activated Sludge; USEPA: Cincinnati, OH, USA, 1973. Available from: *https://nepis.epa.gov/Exe/ZyPURL.cgi?Dockey=9100LL7T.TXT.*
16. Chiellini, E. *et al.* 2003. Biodegradation of poly (vinyl alcohol) based materials. Progress in Polymer Science, 28(6): 963–1014. *https://doi.org/10.1016/s0079-6700(02)00149-1.*
17. Schonberger, H. *et al.* 1997. Study of Microbial Degradation of Polyvinyl Alcohol (PVA) In Wastewater Treatment Plants. American Dyestuff Reporter, 86(8), 9–18. *https://p2infohouse.org/ref/02/01722.pdf.*
18. Kawai, F., and Hu, X. 2009. Biochemistry of microbial polyvinyl alcohol degradation. Applied Microbiology and Biotechnolology, 84: 227–237. *https://doi.org/10.1007/s00253-009-2113-6.*
19. Organization for Economic Cooperation and Development (OECD). 1995. OECD Series on the Test Guidelines Programme Number 2, Detailed Review Paper on Biodegradability Testing, Environment Monograph N° 98. Organisation for Economic Co-operation and Development. Available from: *https://www.oecd.org/officialdocuments/publicdisplaydocumentpdf/?cote=ocde/gd(95)43&doclanguage=en.*
20. OECD. 2006. OECD Guidelines for the Testing of Chemicals, Revised Introduction to the OECD Guidelines for Testing of Chemicals, Section 3, Part 1: Principles and Strategies Related to the Testing of Degradation of Organic Chemicals. Available from: *https://www.oecd-ilibrary.org/environment/revised-introduction-to-the-oecd-guidelines-for-testing-of-chemicals-section-3_9789264030213-en#page1.*
21. Davenport R. *et al.* 2002. Scientific concepts and methods for moving persistence assessments into the 21st century. Integrated Environmental Assessment and Management, 18(6): 1454–1487. *https://doi.org/10.1002/ieam.4575.*
22. Struijs, J., and van den Berg, R. 1995. Standardized biodegradability tests: Extrapolation to aerobic environments. Water Research, 29(1): 255–262. *https://doi.org/10.1016/0043-1354(94)00124-p.*
23. EPA. 2000. Interim Guidance for Using Ready and Inherent Biodegradability Tests to Derive Input Data for Multimedia Models and Wastewater Treatment Plants (WWT) Models. Available from: *https://www.epa.gov/sites/default/files/2015-09/documents/interim_guidance.pdf.*
24. Meier, F. *et al.* 2013. Raw Material Supplier and Detergent Manufacturer Cooperate in Environmental Safety Assessment of a New Detergent Raw Material–A Case Study. Specialties Case Study, 139(3): 59–62. Retrieved from: *https://www.henkel.com/resource/blob/925932/4a0d6394b9927332913344af8223cbea/data/case-study-environmentalsafetyassessment-en-sofw2013.pdf.*
25. EPA. 2022. Interim Guidance for Using Ready and Inherent Biodegradability Tests to Derive Input Data for Multimedia Models and Wastewater Treatment Plant (WWT) Models. Available from: *https://www.epa.gov/tsca-screening-tools/interim-guidance-using-ready-and-inherent-biodegradability-tests-derive-input#wwt.*
26. EPA. 2012. Sustainable Futures/Pollution Prevention (P2) Framework Manual, OCSPP, EPA–748–B12–001. Available from: *https://www.epa.gov/sites/default/files/2015-05/documents/05.pdf.*
27. National Institute of Technology and Evaluation (NITE). 2015. Chemicals Collaborative Knowledge database (J–CHECK). Available from: *https://www.nite.go.jp/chem/jcheck/template.action?ano=28743&mno=6-0682&cno=9002-89-5&request_locale=en.*
28. Ragusa, A. *et al.* 2021. Plasticenta: First Evidence of Microplastics in Human Placenta. Environment International, 146 (106274). *https://doi.org/10.1016/j.envint.2020.106274.*
29. European Chemicals Agency (ECHA). 2020. Opinion on an Annex XV dossier proposing restrictions on intentionally-added microplastics. Committee for Risk Assessment and Committee for Socio-economic Analysis. Available from: *https://echa.europa.eu/documents/10162/b56c6c7e-02fb-68a4-da69-0bcbd504212b.*
30. Liu, G. *et al.* 2019. Sorption behavior and mechanism of hydrophilic organic chemicals to virgin and aged microplastics in freshwater and seawater. Environmental Pollution, 246: 26–33. *https://doi.org/10.1016/j.envpol.2018.11.100.*
31. Wang, F. *et al.* 2020. Sorption Behavior and Mechanisms of Organic Contaminants to Nano and Microplastics. Molecules, 25(8): 1827. *https://doi.org/10.3390/molecules25081827.*
32. Chowdhury, N.K. *et al.* 2015. Polyvinyl alcohol/polysaccharide hydrogel graft materials for arsenic and heavy metal removal. New Journal of Chemistry, 39(7), 5823–5832. *https://doi.org/10.1039/c5nj00509d.*
33. Federal Trade Commission 2012. Guides for the Use of Environmental Marketing Claims. Available from: *https://www.ftc.gov/sites/default/files/documents/federal_register_notices/guides-use-environmental-marketing-claims-green-guides/greenguidesfrn.pdf.*

Authority: 15 U.S.C. 2601 *et seq.*

Dated: April 21, 2023.

Michal Freedhoff,

Assistant Administrator, Office of Chemical Safety and Pollution Prevention.

[FR Doc. 2023–08864 Filed 4–26–23; 8:45 am]

BILLING CODE 6560–50–P

DEPARTMENT OF DEFENSE

Defense Acquisition Regulations System

48 CFR Parts 211, 212, 245, and 252

[Docket DARS–2023–0017]

RIN 0750–AL14

Defense Federal Acquisition Regulation Supplement: Consolidation of DoD Government Property Clauses (DFARS Case 2020–D029)

AGENCY: Defense Acquisition Regulations System, Department of Defense (DoD).

ACTION: Proposed rule.

SUMMARY: DoD is proposing to amend the Defense Federal Acquisition Regulation Supplement (DFARS) to consolidate existing contract clauses for the management and reporting of Government property into a single contract clause, to replace references to legacy software applications used for reporting Government property within the DoD enterprise-wide eBusiness

platform, and to convert existing form-based processes into electronic processes within that platform.

DATES: Comments on the proposed rule should be submitted in writing to the address shown below on or before June 26, 2023, to be considered in the formation of a final rule.

ADDRESSES: Submit comments identified by DFARS Case 2020–D029, using any of the following methods:

○ *Federal eRulemaking Portal: https://www.regulations.gov.* Search for ''DFARS Case 2020–D029.'' Select ''Comment'' and follow the instructions to submit a comment. Please include ''DFARS Case 2020–D029'' on any attached documents.

○ *Email: osd.dfars@mail.mil.* Include DFARS Case 2020–D029 in the subject line of the message.

Comments received generally will be posted without change to *https://www.regulations.gov,* including any personal information provided. To confirm receipt of your comment(s), please check *https://www.regulations.gov,* approximately two to three days after submission to verify posting.

FOR FURTHER INFORMATION CONTACT: Heather Kitchens, telephone 571–296–7152.

SUPPLEMENTARY INFORMATION:

I. Background

DoD is proposing to amend the DFARS to consolidate contract clauses related to management and reporting of Government property, update references to certain forms that are being incorporated into electronic processes, and update references to applications used to report receipt, shipment, transfer, or loss of Government property, or excess Government property. DoD developed the Government-furnished property (GFP) module within the Procurement Integrated Enterprise Environment (PIEE) to house the GFP life-cycle reporting requirements to provide end-to-end accountability for all GFP transactions within a single, secure, integrated system, while employing enhancements in technology to reduce burden on the public and the Government.

There are no changes to the Government property data that contractors are required to report; only the application used to submit the information is changing. The GFP module application is based upon newer technology that will provide contractors with a much more efficient process to submit data for their reports. For instance, contractors will not be required to enter the same data into multiple fields; the system will automatically populate data fields throughout the process. By creating a single tool for all reporting of Government property, data can be readily accessed across various processes, thereby reducing contractor input and errors while enabling traceability across the Government property life cycle.

II. Discussion and Analysis

This proposed rule would remove four DFARS clauses and consolidate their requirements into a single clause at DFARS 252.245–70XX, Management and Reporting of Government Property. The four clauses being removed, and related text for those clauses, are as follows:

a. DFARS clause 252.211–7007, Reporting of Government-Furnished Property. Upon removal of this clause, the associated policy at DFARS 211.274–4, Policy for reporting of Government-furnished property, is no longer applicable and is removed. The removal of 211.274–4 necessitates redesignating subsequent sections. Removal of the clause prescription at 211.274–6(b) results in the redesignation of the subsequent paragraph. DFARS clause 252.211–7007 is also removed from section 212.301, Solicitation provisions and contract clauses for the acquisition of commercial products and commercial services.

b. DFARS clause 252.245–7001, Tagging, Labeling, and Marking of Government-Furnished Property, is removed along with the associated clause prescription at 245.107(3).

c. DFARS clause 252.245–7002, Reporting Loss of Government Property, is removed along with the associated clause prescription at 245.107(4).

d. DFARS clause 252.245–7004, Reporting, Reutilization, and Disposal, is removed along with the associated clause prescription at 245.107(6).

The new consolidated DFARS clause, 252.245–70XX, Management and Reporting of Government Property, instructs contractors to use the GFP module in the PIEE instead of legacy applications when reporting receipt, shipment, transfer, or loss of Government property, and for reporting excess property. A new prescription for this proposed clause is at DFARS 245.107(4). The clause is also added to DFARS 212.301 for use in DoD solicitations and contracts using FAR part 12 procedures for the acquisition of commercial products and commercial services.

At DFARS 245.102, Policy, a reference in paragraph (2) is updated; and in paragraph (5) the paragraph heading is changed to ''Reporting Government property'', and guidance is added concerning the new clause 252.245–70XX to replace the obsolete guidance for clause 252.245–7002, which is removed. At 245.103–72, Government-furnished property attachments to solicitations and awards, updated guidance is provided for using GFP attachments in acquisitions.

DFARS 245.201–70, Definitions, provided a cross-reference to DFARS Procedures, Guidance, and Information (PGI) 245.201–70 that is no longer needed; therefore, the section is removed. As a result, section 245.201–71 is redesignated as 245.201–70.

DFARS 245.604–1, Sales procedures, for the sale of surplus personal property is updated. This DFARS section supplements Federal Acquisition Regulation (FAR) 45.604–1, which states that sales shall be in accordance with the policy for the sale of surplus property contained in the Federal Management Regulation (41 CFR part 102–38) and that agencies may specify implementing procedures. The implementing procedures at DFARS 245.604–1 are revised to align two sales procedures terms with 41 CFR 102–38 to reflect ''invitation for bid'' and ''negotiated sales'' in lieu of ''informal bid procedures'' and ''noncompetitive sales.'' Sales procedures for the contractor are addressed in DFARS clause 252.245–70XX.

Subpart 245.70, Plant Clearance Forms, is no longer needed and is removed and reserved. DD Form 1149, Requisition and Invoice Shipping Document; DD Form 1348–1, DoD Single Line Item Release/Receipt Document; and DD Form 1640, Request for Plant Clearance, have been converted from form-based processes into electronic processes within the GFP module and are addressed in the new clause 252.245–70XX. Coverage for the SF–97, Certificate of Release of a Motor Vehicle (Agency Record Copy), and the DD form 1641, Disposal Determination Approval, is relocated to DFARS PGI 245.602–70. As a result of addressing these forms in DFARS PGI and in the new clause, DFARS subpart 245.70, Plant Clearance Forms, is no longer needed and is removed.

III. Applicability to Contracts at or Below the Simplified Acquisition Threshold (SAT) and for Commercial Services and Commercial Products, Including Commercially Available Off-the-Shelf (COTS) Items

This proposed rule includes a new DFARS contract clause 252.245–7XXX, Management and Reporting of

Government Property. The clause at DFARS 252.245–7XXX is prescribed at DFARS 245.107(4) for use in solicitations and contracts containing the clause at FAR 52.245–1, Government Property. The new clause 252.245–7XXX is applicable to acquisitions at or below the SAT and to acquisitions of commercial products and commercial services when the contract contains the clause at FAR 52.245–1. For DoD, the FAR clause 52.245–1 is required to be used in all purchase orders for repair, maintenance, overhaul, or modification of Government property regardless of the unit acquisition cost of the items to be repaired. These purchase orders are likely to fall under the SAT. Not applying this clause to contracts below the SAT and for the acquisition of commercial products, including COTS items, and commercial services would exclude contracts intended to be covered by this rule and undermine the overarching purpose of the rule. Consequently, DoD plans to apply the rule to contracts at or below the SAT and to those for the acquisition of commercial products, including COTS items, and commercial services.

IV. Expected Impact of the Rule

The proposed rule consolidates the requirements for Government property reporting from multiple DFARS contract clauses into a single DFARS clause, reflecting the move of this activity into a single integrated eBusiness platform. This change will improve the ability of contractors and the Government to access and use the data across the Government property life cycle. The technical enhancements of the PIEE GFP Module allow for importing data, which will substantially reduce the reporting burden on DoD contractors while improving the accuracy of information. The PIEE GFP Module further enables DoD to consolidate and electronically share data about Government property in the possession of contractors, thereby improving accountability and auditability.

V. Executive Orders 12866 and 13563

Executive Orders (E.O.s) 12866 and 13563 direct agencies to assess all costs and benefits of available regulatory alternatives and, if regulation is necessary, to select regulatory approaches that maximize net benefits (including potential economic, environmental, public health and safety effects, distributive impacts, and equity). E.O. 13563 emphasizes the importance of quantifying both costs and benefits, of reducing costs, of harmonizing rules, and of promoting flexibility. This is not a significant regulatory action and, therefore, was not subject to review under section 6(b) of E.O. 12866, Regulatory Planning and Review, dated September 30, 1993.

VI. Regulatory Flexibility Act

DoD does not expect this proposed rule to have a significant economic impact on a substantial number of small entities within the meaning of the Regulatory Flexibility Act, 5 U.S.C. 601, *et seq.,* because the rule is not creating any new requirements for contractors. However, an initial regulatory flexibility analysis has been performed and is summarized as follows:

DoD is proposing to amend the Defense Federal Acquisition Regulation Supplement (DFARS) to consolidate existing contract clauses for the management and reporting of Government property into a single DFARS clause, eliminate some form-based reporting by providing an electronic equivalent, and replace references to legacy software applications used for the reporting of Government property with updated language directing the Government and contractors to utilize the Procurement Integrated Enterprise Environment (PIEE) Government-furnished property (GFP) Module within the DoD enterprise-wide eBusiness platform. DoD developed the GFP module within the PIEE to house the GFP life-cycle reporting requirements, thus providing end-to-end accountability for all GFP transactions within a single, secure, integrated system. Use of the PIEE GFP Module capitalizes on technological enhancements and reduces burden on the public and the Government.

The objective of the rule is to create more efficient instructions for reporting Government property by consolidating reporting requirements for Government property. The proposed rule transitions instructions for property reporting from multiple stand-alone, legacy software applications to the PIEE GFP Module, a fully integrated, DoD enterprise-wide eBusiness platform. Use of the new system functionality will enable DoD to address numerous audit findings and security concerns. The legal basis for the rule is 41 U.S.C. 1303.

This proposed rule will likely affect some small business concerns that are provided Government-furnished property in the performance of their contracts. Data generated from the Federal Procurement Data System for fiscal years 2019 through 2021 indicates that, on average, 2,022 unique small entities per year received awards with Government property that would be subject to this proposed rule.

The proposed rule does not impose any new reporting, recordkeeping, or compliance requirements. The replacement application used for reporting is intended to maintain the status quo regarding the information to be reported and to reduce compliance requirements due to the technological advances in the PIEE GFP Module.

This proposed rule does not duplicate, overlap, or conflict with any other Federal rules. There are no practical alternatives available to meet the objectives of the rule.

DoD invites comments from small business concerns and other interested parties on the expected impact of this rule on small entities.

DoD will also consider comments from small entities concerning the existing regulations in subparts affected by this rule in accordance with 5 U.S.C. 610. Interested parties must submit such comments separately and should cite 5 U.S.C. 610 (DFARS Case 2020–D029), in correspondence.

VII. Paperwork Reduction Act

The Paperwork Reduction Act (44 U.S.C. chapter 35) applies. The proposed rule contains information collection requirements under the new consolidated DFARS clause 252.245–70XX, Management and Reporting of Government Property. Accordingly, DoD has submitted a request for approval of a revised information collection requirement for 0704–0246, DFARS part 245, Government Property, to the Office of Management and Budget (OMB).

As a result of the consolidation of Government-furnished property reporting requirements under a single contract clause, 252.245–70XX, two associated OMB Control Numbers will be discontinued, as the reporting requirements are included in the revised request for OMB Control Number 0704–0246. The OMB Control Numbers to be discontinued are 0704–0398, DFARS Part 211, Describing Agency Needs and related clause at 252.211; and 0704–0557, DFARS Part 245, Use of the Government Property Clause for Repair of Government-furnished Property. Upon approval of the revisions to OMB Control Number 0704–0246 and publication of the final rule for this case, OMB Control Numbers 0704–0398 and 0704–0557 will be discontinued.

The following sets forth the revised information collection request for OMB Control Number 0704–0246:

A. Estimate of Public Burden

Public reporting burden for this collection of information is estimated to average 0.1 hour per response, including the time for reviewing instructions,

searching existing data sources, gathering and maintaining the data needed, and completing and reviewing the collection of information.

The annual reporting burden estimated as follows:

Respondents: 3,513.

Total annual responses: 454,184.

Total response burden hours: 47,659.

B. Request for Comments Regarding Paperwork Burden

Written comments and recommendations on the proposed information collection, including suggestions for reducing this burden, should be submitted within 60 days to *https://www.regulations.gov.* Public comments are particularly invited on: whether this collection of information is necessary for the proper performance of functions of the DFARS, and will have practical utility; whether DoD's estimate of the public burden of this collection of information is accurate, and based on valid assumptions and methodology; ways to enhance the quality, utility, and clarity of the information to be collected; and ways to minimize the burden of the collection of information on those who are to respond, through the use of appropriate technological collection techniques or other forms of information technology.

To obtain a copy of the supporting statement and associated collection instruments, please email *osd.dfars@mail.mil.* Include DFARS Case 2020–D029 in the subject line of the message.

List of Subjects in 48 CFR Parts 211, 212, 245, and 252

Government procurement.

Jennifer D. Johnson,

Editor/Publisher, Defense Acquisition Regulations System.

Therefore, 48 CFR parts 211, 212, 245, and 252 are proposed to be amended as follows:

■ 1. The authority citation for 48 CFR parts 211, 212, 245, and 252 continues to read as follows:

Authority: 41 U.S.C. 1303 and 48 CFR chapter 1.

PART 211—DESCRIBING AGENCY NEEDS

211.274–4 [Removed]

■ 2. Remove section 211.274–4.

211.274–5 and 211.274–6 [Redesignated as 211.274–4 and 211.274–5]

■ 3. Redesignate sections 211.274–5 and 211.274–6 as sections 211.274–4 and 211.274–5, respectively.

211.274–5 [Amended]

■ 4. Amend the newly redesignated section 211.274–5 by—

■ a. Redesignating paragraphs (a)(1), (2), and (3) as paragraphs (a) introductory text and (a)(1) and (2), respectively;

■ b. Removing paragraph (b); and

■ c. Redesignating paragraph (c) as paragraph (b).

PART 212—ACQUISITION OF COMMERCIAL PRODUCTS AND COMMERCIAL SERVICES

■ 5. Amend section 212.301—

■ a. In paragraph (f)(iv)(A) by removing ''211.274–6(a)(1)'' and adding ''211.274–5(a)'' in its place;

■ b. By removing paragraph (f)(iv)(B);

■ c. By redesignating paragraph (f)(iv)(C) as paragraph (f)(iv)(B);

■ d. In the newly redesignated paragraph (f)(iv)(B) by removing ''211.274–6(c)'' and adding ''211.274–5(b)'' in its place;

■ e. Redesignating paragraphs (f)(xviii) and (xix) as paragraphs (f)(xix) and (xx), respectively; and

■ f. Adding a new paragraph (f)(xviii).

The addition reads as follows:

212.301 Solicitation provisions and contract clauses for the acquisition of commercial products and commercial services.

* * * * *

(f) * * *

(xviii) *Part 245—Government Property.* Use the clause at 252.245–70XX, Management and Reporting of Government Property, as prescribed in 245.107(4).

* * * * *

PART 245—GOVERNMENT PROPERTY

■ 6. Amend section 245.102:

■ a. By revising paragraph (2);

■ b. In the paragraph (4) heading and paragraphs (4)(i) and (4)(ii)(A) by removing ''Government-furnished property'' and adding ''GFP'' in their places, respectively; and

■ c. By revising paragraph (5).

The revisions read as follows:

245.102 Policy.

* * * * *

(2) *Government supply sources.* When a contractor will be responsible for preparing requisitioning documentation to acquire Government-furnished property (GFP) from Government supply sources, include in the contract the requirement to prepare the documentation in accordance with Volume 2 of the Defense Logistics Manual (DLM) 4000.25, Military Standard Transaction Reporting and Accounting Procedures (MILSTRAP). Copies are available from the address cited at PGI 251.102.

* * * * *

(5) *Reporting Government property.* It is DoD policy that all Government property be reported in the GFP module or Wide Area WorkFlow module of the Procurement Integrated Enterprise Environment (PIEE) as required by the clause at 252.245–70XX, Management and Reporting of Government Property.

■ 7. Revise section 245.103–72 to read as follows:

245.103–72 Government-furnished property attachments to solicitations and awards.

When performance will require the use of GFP, contracting officers shall include the GFP attachment to solicitations and awards. See PGI 245.103–72 for links to the formats and procedures for preparing the GFP attachment.

■ 8. Amend section 245.107 by—

■ a. Removing paragraphs (3), (4), and (6);

■ b. Redesignating paragraph (5) as paragraph (3); and

■ c. Adding a new paragraph (4).

The addition reads as follows:

245.107 Contract clauses.

* * * * *

(4) Use the clause at 252.245–70XX, Management and Reporting of Government Property, in solicitations and contracts, including solicitations and contracts using FAR part 12 procedures for the acquisition of commercial products and commercial services, that contain the clause at FAR 52.245–1, Government Property.

245.201–70 [Removed]

■ 9. Remove section 245.201–70.

245.201–71 [Redesignated as 245.201–70]

■ 10. Redesignate section 245.201–71 as 245.201–70 and revise it to read as follows:

245.201–70 Security classification.

Follow the procedures at PGI 245.201–70 for security classification.

■ 11. Amend section 245.604–1—

■ a. In paragraph (1) by removing ''(formal or informal sales)'';

■ b. By revising the paragraph (2) heading;

■ c. In paragraph (3)(ii) by removing ''252.245–7004, Reporting, Reutilization, and Disposal'' and adding ''252.245–70XX, Management and Reporting of Government Property'' in its place;

■ d. In the paragraph (4) heading and paragraphs (4)(i) introductory text and (4)(ii) by removing ''Noncompetitive'' and adding ''Negotiated'' in its place

wherever it appears and in paragraph (4)(iii) introductory text by removing ''noncompetitive'' and adding ''negotiated'' in its place; and

■ e. In paragraph (5) by removing ''Implementation of Trade Security Controls'' and adding ''Implementation of Trade Security Controls (TSCs) for Transfers of DoD Personal Property to Parties Outside DoD Control'' in its place.

The revision reads as follows:

245.604–1 Sales procedures.

* * * * *

(2) *Invitation for bid procedures.*

* * *

* * * * *

Subpart 245.70 [Removed and Reserved]

■ 12. Remove and reserve subpart 245.70 consisting of sections 245.7001 and 245.7001–1 through 245.7001–6.

PART 252—SOLICITATION PROVISIONS AND CONTRACT CLAUSES

252.211–7003 [Amended]

■ 13. Amend section 252.211–7003 introductory text by removing ''211.274–6(a)(1)'' and adding ''211.274–5(a)'' in its place.

252.211–7007 [Removed and Reserved]

■ 14. Remove and reserve section 252.211–7007.

252.211–7008 [Amended]

■ 15. Amend section 252.211–7008 introductory text by removing ''211.274–6(c)'' and adding ''211.274–5(b)'' in its place.

252.245–7001 [Removed and Reserved]

■ 16. Remove and reserve section 252.245–7001.

252.245–7002 [Removed and Reserved]

■ 17. Remove and reserve section 252.245–7002.

252.245–7003 [Amended]

■ 18. Amend section 252.245–7003 introductory text by removing ''245.107(5)'' and adding ''245.107(3)'' in its place.

252.245–7004 [Removed and Reserved]

■ 19. Remove and reserve section 252.245–7004.

■ 20. Add section 252.245–70XX to read as follows:

252.245–70XX Management and Reporting of Government Property.

As prescribed in 245.107(4), use the following clause:

Management and Reporting of Government Property (Date)

(a) *Definitions.* As used in this clause—

As is means that the Government makes no warranty with respect to the serviceability and/or suitability of the Government property for contract performance and that the Government will not pay for any repairs, replacement, and/or refurbishment of the property.

Commercial and Government Entity (CAGE) code means—

(1) An identifier assigned to entities located in the United States or its outlying areas by the Defense Logistics Agency (DLA) Commercial and Government Entity (CAGE) Branch to identify a commercial or government entity by unique location; or

(2) An identifier assigned by a member of the North Atlantic Treaty Organization (NATO) or by the NATO Support and Procurement Agency (NSPA) to entities located outside the United States and its outlying areas that the DLA Commercial and Government Entity (CAGE) Branch records and maintains in the CAGE master file. This type of code is known as a NATO CAGE (NCAGE) code.

Contractor-acquired property, contractor inventory, Government property, Government-furnished property, and *loss of Government property* have the meanings given in the Federal Acquisition Regulation (FAR) 52.245–1, Government Property, clause of this contract.

Demilitarization means the act of eliminating the functional capabilities and inherent military design features from DoD personal property. Methods and degree range from removal and destruction of critical features to total destruction by cutting, tearing, crushing, mangling, shredding, melting, burning, etc.

Export-controlled items has the meaning given in the Defense Federal Acquisition Regulation Supplement (DFARS) 252.225–7048, Export-Controlled Items, clause of this contract.

Ineligible transferee means an individual, an entity, or a country—

(1) Excluded from Federal programs by the General Services Administration as identified in the System for Award Management Exclusions located at *https://sam.gov;*

(2) Delinquent on obligations to the U.S. Government under surplus sales contracts;

(3) Designated by the Department of Defense as ineligible, debarred, or suspended from defense contracts; or

(4) Subject to denial, debarment, or other sanctions under export control laws and related laws and regulations, and orders administered by the Department of State, the Department of Commerce, the Department of Homeland Security, or the Department of the Treasury.

Item unique identification means a system of assigning, reporting, and marking DoD property with unique item identifiers that have machine-readable data elements to distinguish an item from all other like and unlike items.

National stock number means a 13-digit stock number used to identify items of supply. It consists of a four-digit Federal Supply Code and a nine-digit National Item Identification Number.

Reparable item means an item, typically in unserviceable condition, furnished to the contractor for maintenance, repair, modification, or overhaul.

Scrap means property that has no value except for its basic material content. For purposes of demilitarization, scrap is defined as recyclable waste and discarded materials derived from items that have been rendered useless beyond repair, rehabilitation, or restoration such that the item's original identity, utility, form, fit, and function have been destroyed. Items can be classified as scrap if processed by cutting, tearing, crushing, mangling, shredding, or melting. Intact or recognizable components and parts are not ''scrap.''

Serially-managed item means an item designated by DoD to be uniquely tracked, controlled, or managed in maintenance, repair, and/or supply systems by means of its serial number or unique item identifier.

Serviceable or usable property means property with potential for reutilization or sale as is or with minor repairs or alterations.

Supply condition code means a classification of materiel in terms of readiness for issue and use or to identify action underway to change the status of materiel.

Unique item identifier (UII) means a set of data elements marked on an item that is globally unique and unambiguous. The term includes a concatenated UII or a DoD recognized unique identification equivalent.

(b) *Reporting Government property.* (1) The Contractor shall use the Government Furnished Property (GFP) module of the Procurement Integrated Enterprise Environment (PIEE) to—

(i) Report physical receipt of GFP;

(ii) Report the loss of Government property, in accordance with paragraph (f)(1)(vii) of the FAR 52.245–1 clause of this contract. Unless otherwise provided for in this contract, this requirement applies to a loss of GFP that results from damage that occurs during work in process (*e.g.,* workmanship errors);

(iii) Report the transfer of GFP to another DoD contract;

(iv) Report the shipment of GFP to the Government or to a contractor. The GFP module generates the electronic equivalent of the DD Form 1149, DD Form 1348–1, or other required shipping documents;

(v) Report when serially-managed items of GFP are incorporated into a higher-level component, assembly, or end item;

(vi) Complete the plant clearance inventory schedule in accordance with paragraph (j)(2) of the FAR 52.245–1 clause of this contract, unless disposition instructions are otherwise included in this contract. The GFP module generates the electronic equivalent of the Standard Form (SF) 1428, Inventory Disposal Schedule; and

(vii) Submit a request to buy back or to convert to GFP items of Contractor-acquired property.

(2) Information regarding the GFP module is available in the GFP Module Vendor Guide at *https://dodprocurementtoolbox.com/site-pages/gfp-resources.* Users may also register

for access to the GFP module and obtain training on the PIEE home page at *https://wawf.eb.mil/piee-landing.*

(3) In complying with paragraphs (b)(1)(i) through (v) of this clause, the Contractor shall report the updated status of the property to the GFP module within 7 business days of the date the change in status occurs, unless otherwise specified in the contract.

(4) The Contractor shall use Wide Area WorkFlow in accordance with DFARS Appendix F, Material Inspection and Receiving Report, to report the shipment of reparable items after completion of repair, maintenance, modification, or overhaul.

(5) When Government property is in the possession of subcontractors, the Contractor shall ensure that reporting is accomplished using the data elements required in paragraph (c) of this clause.

(c) *Records of Government property.* To facilitate reporting of Government property to the GFP module, the Contractor's property records, in addition to the requirements of paragraph (f)(iii) of the FAR 52.245–1 clause of this contract, shall enable recording of the following data elements:

(1) National stock number (NSN). If an NSN is not available, use either the combination of manufacturer's CAGE code and part number, or model number.

(2) CAGE code on the accountable Government contract.

(3) Received/sent (shipped) date.

(4) Accountable Government contract number.

(5) Serial number (for serially-managed items that do not have a UII); and

(6) Supply condition code (only required for reporting of reparable items). See Appendix 2.5 of Volume 2 of the Defense Logistics Manual (DLM) 4000.25, Military Standard Transaction Reporting and Accounting Procedures (MILSTRAP), at *https://www.dla.mil/HQ/Information Operations/DLMS/elibrary/manuals/v2/* for information on Federal supply condition codes.

(d) *Marking, reporting, and UII registration of GFP requirements.* The Contractor—

(1) Shall assign the UII and mark the GFP items identified as serially managed in the GFP attachment to this contract with an item unique identification (IUID) data matrix, when the technical drawing for the item is accessible to the Contractor and includes IUID data matrix location and marking method;

(2) Shall report the UII either before or during shipment of the repaired item;

(3) Is not required to mark items that were previously marked with an IUID data matrix and registered in accordance with DFARS 252.211–7003, Item Unique Identification and Valuation; and

(4) Shall assign a new UII, then mark and register the item, when the conditions of paragraph (d)(1) are met, if an item is found to be marked but not registered.

(e) *Disposing of Government property.* (1) The Contractor shall complete the plant clearance inventory schedule using the plant clearance capability of the GFP module of the PIEE to generate an electronic equivalent of the SF 1428, Inventory Disposal Schedule. The plant clearance inventory schedule requires the following:

(i) If known, the applicable Federal supply code (FSC) for all items, except items in scrap condition.

(ii) If known, the manufacturer name for all aircraft components under Federal supply group (FSG) 16 or 17 and FSCs 2620, 2810, 2915, 2925, 2935, 2945, 2995, 4920, 5821, 5826, 5841, 6340, and 6615.

(iii) The manufacturer name, make, model number, model year, and serial number for all aircraft under FSCs 1510 and 1520.

(iv) The appropriate Federal condition codes. See Appendix 2.5 of Volume 2 of DLM 4000.25–2, Supply Standards and Procedures, edition in effect as of the date of this contract, at *https://www.dla.mil/Portals/104/Documents/DLMS/manuals/dlm/v2/Volume2Change13Files.pdf.*

(2) If the schedules are acceptable, the plant clearance officer will confirm acceptance in the GFP module plant clearance capability, which will transmit a notification to the Contractor. The electronic acceptance is equivalent to the DD Form 1637, Notice of Acceptance of Inventory.

(f) *Demilitarization, mutilation, and destruction.* If demilitarization, mutilation, or destruction of contractor inventory is required, the Contractor shall demilitarize, mutilate, or destroy contractor inventory, in accordance with the terms and conditions of the contract and consistent with Defense Demilitarization Manual, DoD Manual (DoDM) 4160.28–M, edition in effect as of the date of this contract. If the property is available for purchase, the plant clearance officer may authorize the purchaser to demilitarize, mutilate, or destroy as a condition of sale provided the property is not inherently dangerous to public health and safety.

(g) *Classified Contractor inventory.* The Contractor shall dispose of classified contractor inventory in accordance with applicable security guides and regulations or as directed by the Contracting Officer.

(h) *Inherently dangerous Contractor inventory.* Contractor inventory that is dangerous to public health or safety shall not be disposed of unless rendered innocuous or until adequate safeguards are provided.

(i) *Contractor inventory located in foreign countries.* Consistent with contract terms and conditions, property disposition shall be in accordance with foreign and U.S. laws and regulations, including laws and regulations involving export controls, host nation requirements, final governing standards, and government-to-government agreements. The Contractor's responsibility to comply with all applicable laws and regulations regarding export-controlled items exists independent of, and is not established or limited by, the information provided by this clause.

(j) *Disposal of scrap*—(1) *Contractor scrap procedures.* (i) The Contractor shall include, within its property management procedure, a process for the accountability and management of Government-owned scrap. The process shall, at a minimum, provide for the effective and efficient disposition of scrap, including sales to scrap dealers, so as to minimize costs, maximize sales proceeds, and contain the necessary internal controls for mitigating the improper release of non-scrap property.

(ii) The Contractor may commingle Government and contractor-owned scrap and provide routine disposal of scrap, with plant clearance officer concurrence, when determined to be effective and efficient.

(2) *Scrap warranty.* The plant clearance officer may require the Contractor to secure from scrap buyers a DD Form 1639, Scrap Warranty.

(k) *Sale of surplus Contractor inventory*—(1) *Sales procedures.* (i) The Contractor shall conduct sales of contractor inventory (both useable property and scrap) in accordance with the requirements of this contract and plant clearance officer direction. The Contractor shall include in its invitation for bids the sales terms and conditions provided by the plant clearance officer.

(ii) The Contractor may conduct internet-based sales, to include use of a third party.

(iii) If the Contractor wishes to bid on the sale, the Contractor or its employees shall submit bids to the plant clearance officer prior to soliciting bids from other prospective bidders.

(iv) The Contractor shall solicit bids to obtain adequate competition. Negotiated sales are subject to obtaining such competition as is feasible under the circumstances of the negotiated sale.

(v) The Contractor shall solicit bids at least 15 calendar days before bid opening to allow adequate opportunity to inspect the property and prepare bids.

(vi) For large sales, the Contractor may use summary lists of items offered as bid sheets with detailed descriptions attached.

(vii) In addition to providing notice of the proposed sale to prospective bidders, the Contractor may, when the results are expected to justify the additional expense, display a notice of the proposed sale in appropriate public places, *e.g.,* publish a sales notice on the internet, in appropriate trade journals or magazines, and in local newspapers.

(viii) The plant clearance officer or designated Government representative will witness the bid opening. The Contractor shall submit the bid abstract in electronic format to the plant clearance officer within 2 days of bid opening. If the Contractor is unable to submit the bid abstract electronically, the Contractor may submit 2 copies of the abstract manually within 2 days of bid opening. The plant clearance officer will not approve award to any bidder who is an ineligible transferee.

(2) *Required terms and conditions for sales contracts.* The Contractor shall include the following terms and conditions in sales contracts:

(i) For sales contracts or other documents transferring title:

''The Purchaser certifies that the property covered by this contract will be used in *[Insert name of country].* In the event of resale or export by the Purchaser of any of the property, the Purchaser agrees to obtain the appropriate U.S. and foreign export or re-export license approval.''

(ii) For sales contracts that require demilitarization, mutilation, or destruction of property:

''The following item(s) *[Insert list provided by plant clearance officer]* require demilitarization, mutilation, or destruction by the Purchaser. Additional instructions are provided in accordance with Defense Demilitarization Manual, DoDM 4160.28–M, edition in effect as of the date of this sales contract. A Government representative will certify and verify demilitarization of items. Prepare demilitarization certificates in accordance with DoDM 4160.28, Volume 2, section 4.5, DEMIL Certificate (see figure 2, Example DEMIL Certificate).''

(iii) Removal and title transfer:

''Property requiring demilitarization shall not be removed, and title shall not pass to the Purchaser, until demilitarization has been accomplished and verified by a Government representative.''

(iv) Assumption of cost incident to demilitarization:

''The Purchaser agrees to assume all costs incident to the demilitarization and to restore the working area to its present condition after removing the demilitarized property.''

(v) Failure to demilitarize:

''If the Purchaser fails to demilitarize, mutilate, or destroy the property as specified in the sales contract, the Contractor may, upon giving 10 days written notice from to the Purchaser—

(A) Repossess, demilitarize, and return the property to the Purchaser, in which case the Purchaser hereby agrees to pay to the Contractor, prior to the return of the property, all costs incurred by the Contractor in repossessing, demilitarizing, and returning the property;

(B) Repossess, demilitarize, and resell the property, and charge the defaulting Purchaser with all costs incurred by the Contractor. The Contractor shall deduct these costs from the purchase price and refund the balance of the purchase price, if any, to the Purchaser. In the event the costs exceed the purchase price, the defaulting Purchaser hereby agrees to pay these costs to the Contractor; or

(C) Repossess and resell the property under similar terms and conditions, and charge the defaulting Purchaser with all costs incurred by the Contractor. The Contractor shall deduct these costs from the original purchase price and refund the balance of the purchase price, if any, to the defaulting Purchaser. Should the excess costs to the Contractor exceed the purchase price, the defaulting Purchaser hereby agrees to pay these costs to the Contractor.''

(l) *Restrictions on purchase or retention of Contractor inventory.* The Contractor may not knowingly sell the inventory to any person or that person's agent, employee, or household member if that person—

(1) Is a civilian employee of DoD or the U.S. Coast Guard;

(2) Is a member of the armed forces of the United States, including the U.S. Coast Guard; or

(3) Has any functional or supervisory responsibilities for or within DoD's property disposal, disposition, or plant clearance programs or for the disposal of contractor inventory.

(m) *Proceeds from sales of surplus property.* Unless otherwise provided in the contract, the proceeds of any sale, purchase, or retention shall be—

(1) Forwarded to the Contracting Officer;

(2) Credited to the Government as part of the settlement agreement pursuant to the termination of the contract;

(3) Credited to the price or cost of the contract; or

(4) Applied as otherwise directed by the Contracting Officer.

(End of clause)

[FR Doc. 2023–08645 Filed 4–26–23; 8:45 am]

BILLING CODE 5001–06–P

DEPARTMENT OF DEFENSE

Defense Acquisition Regulations System

48 CFR Part 212, 237, and 252

[Docket DARS–2023–0016]

RIN 0750–AL07

Defense Federal Acquisition Regulation Supplement: Transfer and Adoption of Military Animals (DFARS Case 2020–D021)

AGENCY: Defense Acquisition Regulations System, Department of Defense (DoD).

ACTION: Proposed rule.

SUMMARY: DoD is proposing to amend the Defense Federal Acquisition Regulation Supplement (DFARS) to implement a section of the National Defense Authorization Act for Fiscal Year 2020.

DATES: Comments on the proposed rule should be submitted in writing to the address shown below on or before June 26, 2023, to be considered in the formation of the final rule.

ADDRESSES: Submit comments identified by DFARS Case 2020–D021, using any of the following methods:

○ *Federal eRulemaking Portal: https://regulations.gov.* Search for ''DFARS Case 2020–D021.'' Select ''Comment'' and follow the instructions to submit a comment. Please include ''DFARS Case 2020–D021'' on any attached documents.

○ *Email: osd.dfars@mail.mil.* Include DFARS Case 2020–D021 in the subject line of the message.

Comments received generally will be posted without change to *https://www.regulations.gov,* including any personal information provided. To confirm receipt of your comment(s), please check *https://www.regulations.gov,* approximately two to three days after submission to verify posting.

FOR FURTHER INFORMATION CONTACT: Kimberly R. Ziegler, telephone 703–901–3176.

SUPPLEMENTARY INFORMATION:

I. Background

DoD is proposing to amend DFARS part 237, Service Contracting, to implement section 372(f) of the National Defense Authorization Act (NDAA) for Fiscal Year (FY) 2020 (Pub. L. 116–92). Section 372(f), as implemented at 10 U.S.C. 2387 (previously 10 U.S.C. 2410r), requires DoD contracting officers to include a clause in contracts when contract working dogs are provided under the contract. 10 U.S.C. 2387 requires the transfer of a contract working dog, after the service life of the dog has terminated, to the United States Air Force, 341st Training Squadron, for—

a. Veterinary screening and care; and

b. Reclassification as a military animal and placement for adoption in accordance with 10 U.S.C. 2583.

The service life of a contract working dog may be terminated if a contracting officer determines that—

a. The final contractual obligation of the dog preceding the transfer is with DoD; and

b. The dog cannot be used by another department or agency of the Federal Government due to age, injury, or performance.

DoD determines the status of military animals and whether a military animal is suitable for transfer or adoption under the statutory direction provided in 10 U.S.C. 2583, Military animals: transfer and adoption. It also provides the priority for adoptions or transfer, standards for veterinary care, and transportation of retiring military working dogs. The 341st Training Squadron is responsible for the performance of these duties under the DoD Military Working Dog Program. Section 372 amends 10 U.S.C. 2583; however, those amendments are outside of the scope of this proposed rule.

II. Discussion and Analysis

The proposed rule creates a new subpart under DFARS part 237, Service Contracting, to address the requirements in 10 U.S.C. 2387. DoD generally contracts for contract working dogs as a service performed by a contracted handler and dog as a unit or team, most often for security, law enforcement, or other specialized circumstances. These contract working dogs are under the control of an experienced, contracted handler at all times and are not paired with an active duty military member or DoD civilian handler. Based upon the manner in which DoD contracts for the contract working dogs and the definition of a contract working dog provided in 10 U.S.C. 2387(c), the new

direction is implemented in DFARS part 237.

A contract working dog would be transferred to the Government only when the conditions at 10 U.S.C. 2387(b) are met. In the event that a requiring activity submits a request based upon both conditions being met, a contracting officer may determine that the service life of a contract working dog has terminated. The dog will then be transferred to the 341st Training Squadron for reclassification as a military animal and placement for adoption in accordance with 10 U.S.C. 2583.

The proposed rule prescribes a new contract clause at 252.237–70XX, Transfer and Adoption of Military Animals, for use in solicitations and contracts for contract working dog services, to include solicitations and contracts using Federal Acquisition Regulation (FAR) part 12 procedures and for commercial products and commercial services. The new clause provides notification to offerors and contractors that under certain circumstances, the contract working dog is required to be transferred to the 341st Training Squadron for care and reclassification as a military animal and placement for adoption in accordance with 10 U.S.C. 2583.

III. Applicability to Contracts at or Below the Simplified Acquisition Threshold (SAT) and for Commercial Services and Commercial Products, Including Commercially Available Off-the-Shelf (COTS) Items

This proposed rule implements 10 U.S.C. 2387 as amended by section 372(f) of the NDAA for FY 2020. The statute requires DoD to add a contract clause to contracts for the provision of contract working dog services. As a result, the proposed rule adds one new contract clause at 252.237–70XX, Transfer and Adoption of Military Animals, for use in solicitations and contracts, including solicitations and contracts using FAR part 12 procedures for commercial products and commercial services, that require the services of a contract working dog. Accordingly, DoD intends to apply the proposed rule to acquisitions below the SAT and to the acquisition of commercial services.

A. Applicability to Contracts at or Below the Simplified Acquisition Threshold

41 U.S.C. 1905 governs the applicability of laws to contracts or subcontracts in amounts not greater than the SAT. It is intended to limit the applicability of laws to such contracts or subcontracts. 41 U.S.C. 1905 provides that if a provision of law contains criminal or civil penalties, or if the Federal Acquisition Regulatory Council makes a determination that it is not in the best interest of the Federal Government to exempt contracts or subcontracts at or below the SAT, the law will apply to them. The Principal Director, Defense Pricing and Contracting (DPC), is the appropriate authority to make comparable determinations for regulations to be published in the DFARS, which is part of the Federal Acquisition Regulation system of regulations. DoD intends to make that determination to apply this proposed rule at or below the SAT.

B. Applicability to Contracts for the Acquisition of Commercial Services and Commercial Products, Including COTS Items

10 U.S.C. 3452 (previously 10 U.S.C. 2375) governs the applicability of laws to DoD contracts and subcontracts for the acquisition of commercial products, including COTS items, and commercial services from provisions of law enacted after October 13, 1994, and is intended to limit the applicability of laws to contracts and subcontracts for the acquisition of commercial services and commercial products including COTS items. 10 U.S.C. 3452 provides that if a provision of law contains criminal or civil penalties, or if the Under Secretary of Defense for Acquisition and Sustainment (USD(A&S)) makes a written determination that it is not in the best interest of the Federal Government to exempt commercial product and commercial service contracts, the provision of law will apply to contracts for the acquisition of commercial products and commercial services. Due to delegations of authority from USD(A&S), the Principal Director, DPC is the appropriate authority to make this determination. DoD intends to make that determination to apply this proposed rule to the acquisition of commercial services if otherwise applicable.

C. Determination

DoD is proposing to apply the requirements of 10 U.S.C. 2387 to contracts at or below the SAT, since the requirements of the proposed clause at 252.237–70XX would apply to contracts that are normally of a value at or below the SAT and conducted under FAR part 12 procedures. The new requirements will apply to contracts for the acquisition of commercial services, because the services provided under these contracts are considered commercial in nature. The requirements do not apply to COTS items.

It is not in the best interest of the Federal Government to exempt application of this proposed rule to actions at or below the SAT or for commercial services. An exception for contracts below the SAT and those for commercial services would exclude the majority of the contracts intended to be covered by the law, thereby undermining the overarching public policy purpose of the law.

IV. Expected Impact of the Rule

DoD does not expect the proposed rule to have a significant impact on the public, because the need for a contracting officer to make a determination that a contract working dog has reached the end of its service life will be rare. Such acquisitions are few in number, and service contractors who provide contract working dogs and handlers are expected to replace dogs and handlers who are unable to perform to DoD standards. A contracting officer's representative would be responsible for monitoring contract performance and coordinating any replacement dog and handler requirements.

V. Executive Orders 12866 and 13563

Executive Orders (E.O.s) 12866 and 13563 direct agencies to assess all costs and benefits of available regulatory alternatives and, if regulation is necessary, to select regulatory approaches that maximize net benefits (including potential economic, environmental, public health and safety effects, distributive impacts, and equity). E.O. 13563 emphasizes the importance of quantifying both costs and benefits, of reducing costs, of harmonizing rules, and of promoting flexibility. This is not a significant regulatory action and, therefore, was not subject to review under section 6(b) of E.O. 12866, Regulatory Planning and Review, dated September 30, 1993.

VI. Regulatory Flexibility Act

DoD does not expect this proposed rule to have a significant economic impact on a substantial number of small entities within the meaning of the Regulatory Flexibility Act, 5 U.S.C. 601, *et seq.,* because the proposed rule will apply to a limited number of service providers. However, an initial regulatory flexibility analysis has been performed and is summarized as follows:

DoD is proposing to amend the Defense Federal Acquisition Regulation Supplement (DFARS) to implement 10 U.S.C. 2387 (previously 10 U.S.C. 2410r), as amended by section 372(f) of the National Defense Authorization Act (NDAA) for Fiscal Year (FY) 2020 (Pub.

L. 116–92). Under 10 U.S.C. 2387, DoD contracting officers are required to include a clause in contracts for contract working dog services.

The objective of the rule is to implement the statutory requirements for terminating the service life of a contract working dog, when certain circumstances apply, and transferring the animal to the Department of the Air Force, 341st Training Squadron. The legal basis of the rule is 10 U.S.C. 2387, as amended by section 372(f) of the NDAA for FY 2020.

This proposed rule will apply to small entities providing contract working dog and handler services to DoD. The proposed clause is prescribed for use in solicitations and contracts for such services, including those conducted under FAR part 12 procedures for the acquisition of commercial products and commercial services.

Research conducted in the Contract Opportunities section of *SAM.gov* indicates that contract working dog and handler services are generally procured under North American Industry Classification System codes and product and service codes that provide for certain physical security and law enforcement services. Data obtained from the Federal Procurement Data System (FPDS) for FY 2019, 2020, and 2021 indicate that DoD awards an average of 227 contract actions annually for these physical security and law enforcement services, which may include a requirement for a contract working dog and handler. Of the estimated 227 awards, an average of approximately 72 awards are made annually to an estimated 52 unique small entities. Neither FPDS nor *SAM.gov* provide data for the number of awards that are specific to the contract working dog and handler services; however, this analysis assumes all of the estimated awards and unique small entities may be impacted.

The proposed rule does not impose any new reporting, recordkeeping, or compliance requirements.

The proposed rule does not duplicate, overlap, or conflict with any other Federal rules.

There are no practical alternatives that will accomplish the objectives of the statute.

DoD invites comments from small business concerns and other interested parties on the expected impact of this rule on small entities.

DoD will also consider comments from small entities concerning the existing regulations in subparts affected by the rule in accordance with 5 U.S.C. 610. Interested parties must submit such comments separately and should cite 5 U.S.C. 610 (DFARS Case 2020–D021), in correspondence.

VII. Paperwork Reduction Act

This proposed rule does not contain any information collection requirements that require the approval of the Office of Management and Budget under the Paperwork Reduction Act (44 U.S.C. chapter 35).

List of Subjects in 48 CFR Part 212, 237, and 252

Government Procurement.

Jennifer D. Johnson,

Editor/Publisher, Defense Acquisition Regulations System.

Therefore, 48 CFR parts 212, 237, and 252 are proposed to be amended as follows:

■ 1. The authority citation for parts 212, 237, and 252 continues to read as follows:

Authority: 41 U.S.C. 1303 and 48 CFR chapter 1.

PART 212—ACQUISITION OF COMMERCIAL PRODUCTS AND COMMERCIAL SERVICES

■ 2. Amend section 212.301 by adding paragraph (f)(xiv)(E) to read as follows:

212.301 Solicitation provisions and contract clauses for the acquisition of commercial products and commercial services.

* * * * *

(f) * * *

(xiv) * * *

(E) Use the clause at 252.237–70XX, Transfer and Adoption of Military Animals, as prescribed in 237.7X04 to comply with 10 U.S.C. 2387.

PART 237—SERVICE CONTRACTING

■ 3. Add subpart 237.7X to read as follows:

SUBPART 237.7X—TRANSFER AND ADOPTION OF MILITARY ANIMALS

237.7X00 Scope of subpart.
237.7X01 Definition.
237.7X02 Policy.
237.7X03 Procedures.
237.7X04 Contract clause.

SUBPART 237.7X—TRANSFER AND ADOPTION OF MILITARY ANIMALS

237.7X00 Scope of subpart.

This subpart implements 10 U.S.C. 2387, which requires, under certain circumstances, the transfer of a contract working dog to the Department of Air Force, 341st Training Squadron, for veterinary screening and care in accordance with 10 U.S.C. 2583.

237.7X01 Definition.

As used in this subpart—

Contract working dog means a dog that—

(1) Performs a service for DoD pursuant to a contract; and

(2) Is trained and kenneled by an entity that provides such a dog pursuant to such a contract.

237.7X02 Policy.

(a) In accordance with 10 U.S.C. 2387, DoD will transfer a contract working dog to the Department of the Air Force, 341st Training Squadron, for veterinary screening and care after the service life of the dog has terminated.

(b) The service life of a contract working dog may be terminated if—

(1) The final contractual obligation of the dog preceding transfer is with DoD; and

(2) The dog cannot be used by another department or agency of the Federal Government due to age, injury, or performance.

(c) A contract working dog that has reached the end of its service life will be transferred for care and reclassification as a military animal and placement for adoption in accordance with 10 U.S.C. 2583.

237.7X03 Procedures.

Contracting officers, at the request of the requiring activity, may issue a determination that the service life of a contract working dog has terminated if the conditions in 237.7X02(b) have been documented by the requiring activity.

237.7X04 Contract clause.

Use the clause at 252.237–70XX, Transfer and Adoption of Military Animals, in solicitations and contracts, including solicitations and contracts using FAR part 12 procedures for the acquisition of commercial products and commercial services, that require the use of a contract working dog.

PART 252—SOLICITATION PROVISIONS AND CONTRACT CLAUSES

■ 4. Add section 252.237–70XX to read as follows:

252.237–70XX Transfer and Adoption of Military Animals.

As prescribed in 237.7X04, use the following clause:

Transfer and Adoption of Military Animals (Date)

(a) *Definition.* As used in this clause—

Contract working dog means a dog that—

(1) Performs a service for DoD pursuant to a contract; and

(2) Is trained and kenneled by an entity that provides such a dog pursuant to such a contract.

(b) In accordance with 10 U.S.C. 2387, a contract working dog, after the service life of the dog has terminated, is required to be transferred to the Department of the Air Force, 341st Training Squadron, for veterinary screening and care and for reclassification as a military animal and placement for adoption in accordance with 10 U.S.C. 2583.

(c) The service life of a contract working dog may be terminated if the Contracting Officer determines that—

(1) The final contractual obligation of the dog preceding transfer is with DoD; and

(2) The dog cannot be used by another department or agency of the Federal Government due to age, injury, or performance.

(d) If the Contracting Officer determines that the service life of a contract working dog has terminated, the dog will be transferred to the 341st Training Squadron for care and reclassification as a military animal and placement for adoption in accordance with 10 U.S.C. 2583.

(End of clause)

[FR Doc. 2023–08644 Filed 4–26–23; 8:45 am]

BILLING CODE 5001–06–P

DEPARTMENT OF DEFENSE

Defense Acquisition Regulations System

48 CFR Parts 225 and 252

[Docket DARS–2023–0018]

RIN 0750–AL33

Defense Federal Acquisition Regulation Supplement: Restriction on Certain Metal Products (DFARS Case 2021–D015)

AGENCY: Defense Acquisition Regulations System, Department of Defense (DoD).

ACTION: Proposed rule.

SUMMARY: DoD is proposing to amend the Defense Federal Acquisition Regulation Supplement (DFARS) to implement a section of the National Defense Authorization Act for Fiscal Year 2021 that provides restrictions on the acquisition of certain covered materials from North Korea, the People's Republic of China, Russia, and Iran.

DATES: Comments on the proposed rule should be submitted in writing to the address shown below on or before June 26, 2023, to be considered in the formation of a final rule.

ADDRESSES: Submit comments identified by DFARS Case 2021–D015, using any of the following methods:

○ *Federal eRulemaking Portal: https://www.regulations.gov.* Search for ''DFARS Case 2021–D015.'' Select ''Comment'' and follow the instructions to submit a comment. Please include your name, company name (if any), and ''DFARS Case 2021–D015'' on any attached documents.

○ *Email: osd.dfars@mail.mil.* Include DFARS Case 2021–D015 in the subject line of the message.

Comments received generally will be posted without change to *https://www.regulations.gov,* including any personal information provided. To confirm receipt of your comment(s), please check *https://www.regulations.gov,* approximately two to three days after submission to verify posting.

FOR FURTHER INFORMATION CONTACT: Kimberly Bass, telephone 703–717–3446.

SUPPLEMENTARY INFORMATION:

I. Background

DoD is proposing to revise the DFARS to implement section 844 of the National Defense Authorization Act for Fiscal Year 2021 (Pub. L. 116–283). Section 844 amends 10 U.S.C. 2533c (redesignated 10 U.S.C. 4872) and removes from the restriction ''material melted'' and replaces it with ''material mined, refined, separated, melted''. In addition, the reference to ''tungsten'' is removed and replaced with ''covered material'' in the exception for commercially available-off-the-shelf (COTS) items to the restriction of 50 percent or more by weight. The new restriction in the proposed rule will go into effect on January 1, 2026.

II. Discussion and Analysis

A. Restriction

The proposed rule would revise the restriction on the acquisition of covered materials melted or produced in the Democratic People's Republic of North Korea, the People's Republic of China, the Russian Federation, or the Islamic Republic of Iran at DFARS 225.7018–2(a), to include a reference to the end date of the current restriction effective through December 31, 2025, at paragraph (a)(1). The revision also states that the new restriction at paragraph (a)(2) for the covered materials becomes effective on January 1, 2026. The term ''covered materials,'' already defined at DFARS 225.7018–1, means samarium-cobalt magnets, neodymium-iron-boron magnets, tantalum metals and alloys, tungsten metal powder, and tungsten heavy alloy or any finished or semi-finished component containing tungsten heavy alloy.

DFARS 225.7018–2(b)(2) is added to reflect the restriction effective on January 1, 2026, for samarium-cobalt magnets to convey that the new restriction will include the entire supply chain from mining or production of a cobalt and samarium ore or feedstock, including recycled material, through production of finished magnets. Accordingly, paragraph (b)(1) was revised to reflect the end date of the current restriction for samarium-cobalt magnets and neodymium-iron-boron magnets on December 31, 2025. In addition, revisions at DFARS 225.7018–2(b)(4) include the new restriction for neodymium-iron-boron magnets covering the entire supply chain effective on January 1, 2026.

Paragraph (c)(1) adds the end date of the current restrictions for tantalum metals and alloys, effective through December 31, 2025. DFARS 225.7018–2(c)(2) implements the new restriction for the production of tantalum metals and alloys effective on January 1, 2026. DFARS 225.7018–2(d)(2) implements the new restriction for the production of tungsten metal powder, tungsten heavy alloy, or any finished or semi-finished component containing tungsten heavy alloy in effect on January 1, 2026. Paragraph (d)(1) adds the end date of the current restrictions for tungsten metal powder, tungsten heavy alloy, or any finished or semi-finished component containing tungsten heavy alloy, effective through December 31, 2025.

B. Exceptions

The proposed rule at 225.7018–3(c)(1)(i) revises the COTS items exception to the restriction of 50 percent or more by weight to include all covered material and removes the individual exception for tungsten. Subsequently, the restriction was revised at DFARS 225.7018–3(c)(1)(i)(A) to add the end date of the current restriction of 50 percent or more tungsten by weight, effective through December 31, 2025. In addition, the new COTS items exception is added at (c)(1)(i)(B) to implement the new restriction for 50 percent or more covered material by weight effective on January 1, 2026. The proposed rule at DFARS 225.7018–3(c)(1)(ii) revises the current COTS items exception to reflect the restriction effective through December 31, 2025.

DFARS 225.7018–3(c)(1)(iii) is added to implement the COTS items exception for the new restriction on a covered material that is a mill product such as bar, billet, slab, wire, cube, sphere, block, blank, plate, or sheet, that has not been incorporated into an end item, subsystem, assembly, or component, to be effective on January 1, 2026.

C. Contract Clause Revision

The clause at DFARS 252.225–7052, Restriction on the Acquisition of Certain Magnets, Tantalum, and Tungsten, is revised to incorporate conforming revisions at paragraph (b)(1)(i) for the current restriction with the end date; and the new statutory restriction with the effective date is in paragraph (b)(1)(ii). The current restriction for samarium-cobalt magnets and neodymium-iron-boron magnets at paragraph (b)(2)(i)(A) includes a reference to the end date of December 31, 2025, and the new restriction is implemented at paragraph (b)(2)(B) effective on January 1, 2026. The COTS items exceptions to the restriction are included in paragraphs (c)(1)(ii)(A)(*1*) and (*2*) in accordance with section 844 of the NDAA for FY 2021 and 10 U.S.C. 4872.

III. Applicability to Contracts at or Below the Simplified Acquisition Threshold (SAT) and for Commercial Products, Including Commercially Available Off-the-Shelf (COTS) Items, and Commercial Services

This proposed rule includes amendments to the clause at DFARS 252.225–7052, Restriction on the Acquisition of Certain Magnets, Tantalum, and Tungsten. However, this proposed rule does not impose any new requirements on contracts at or below the SAT or for commercial products, including COTS items. DFARS 252.225–7052 does not apply to acquisitions at or below the SAT, in accordance with 41 U.S.C. 1905, but applies to contracts for the acquisition of commercial products, including COTS items, except as provided in the statute at 10 U.S.C. 4872(c)(3). DoD has previously signed a determination of applicability of 10 U.S.C. 4872 to acquisitions of commercial items, except for COTS items to the extent exempted in the statute.

IV. Expected Impact of the Rule

This proposed rule is expected to have an impact on the Government and industry because this rule significantly expands the scope of compliance in accordance with section 844 of the NDAA for FY 2021 and 10 U.S.C. 4872.

The current restriction at DFARS 225.7018–2 covers the melting of precursor metals (*e.g.,* samarium metal and cobalt metal) to produce alloys (*e.g.,* samarium-cobalt alloy) and other equivalent processes (*e.g.,* atomization, calcination and reduction, or final consolidation of non-melt derived metal powders). One of the materials covered by this proposed rule at 225.7018–2 and the clause at DFARS 252.225–7052, Restriction on the Acquisition of Certain Magnets, Tantalum, and Tungsten, is also covered by longstanding restrictions for the acquisition of specialty metals at DFARS 225.7003–2 (10 U.S.C. 4875) and under the clause at DFARS 252.225–7009, Restriction on Acquisition of Specialty Metals, that includes the same coverage of production steps (*e.g.,* melt or produce).

This proposed rule expands the scope of product coverage to all upstream mining, refining, separation, and melting of covered materials. Taken together with the overlapping restriction on specialty metals at DFARS 225.7003–2 and the clause at DFARS 252.225–7009, Restriction on Acquisition of Specialty Metals, covered materials that are compliant with the specialty metals clause may not be compliant with the current restriction at DFARS 225.7018–2 or the clause at DFARS 252.225–7052, Restriction on the Acquisition of Certain Magnets, Tantalum, and Tungsten, nor are they likely to be compliant with this proposed rule.

For example, assume that a contractor purchases a component from a United Kingdom-based supplier, and the assembly contains a samarium-cobalt magnet manufactured in China. This component would be compliant with the specialty metals clause, because the specialty metals clause exempts qualifying country components. However, this proposed rule has no exemption for qualifying country components, and thus the assembly would be noncompliant with the current restriction at DFARS 225.7018–2 and the clause at DFARS 252.225–7052, Restriction on the Acquisition of Certain Magnets, Tantalum, and Tungsten, in its current form and as proposed.

Further, assume that a company purchases a motor from a U.S. manufacturer, and that U.S. motor manufacturer purchases a magnet from a U.S. company. The U.S. magnet company purchases cobalt metal and samarium metal from China, and these metals are melted in the United States. This magnet would be compliant with both the restriction required by the specialty metals clause at DFARS 252.225–7009 and the current restriction at DFARS 225.7018–2 and the clause at DFARS 252.225–7052. However, this magnet would not be compliant with the proposed rule requirements effective on January 1, 2026.

Further, assume that a company produces business jets and modifies them for military use. During a given year, the business jet manufacturer purchases 50 percent of its samarium-cobalt magnet needs from a U.S. source that mines and conducts all subsequent processing steps in the United States. The balance of the company's samarium-cobalt magnets are procured from Chinese sources and the company commingles domestically and Chinese-produced magnets on its production line. In this scenario, the modified business jet is compliant with the restriction at DFARS 225.7003–2 and the clause at DFARS 252.225–7009, because it is a commercial derivative military article, and the company procures 50 percent of its total needs from a domestic source. However, the modified business jet is potentially noncompliant with the proposed rule, given the commingling of Chinese and U.S. samarium-cobalt magnets in each aircraft.

Notwithstanding the significant change in scope, DoD notes that Congress enacted this requirement on January 1, 2021, through Public Law 116–283. This five-year phase-in period provides a reasonable period for industry to develop alternative sources of supply for covered materials from sources other than the People's Republic of China, the Russian Federation, the Democratic People's Republic of North Korea, and the Islamic Republic of Iran.

DoD also notes that it has invested and continues to invest in domestic supply chains for covered materials, such as light and heavy rare earth elements and rare earth magnet manufacture, using authorities under 50 U.S.C. 4533 and 10 U.S.C. 4817 among others. For those materials not currently covered by DoD investments, such as tantalum and tungsten, publicly traded U.S. companies, including DoD contractors and their subcontractors, already are required to conduct supply chain due diligence on these minerals when they are necessary to the functionality or production of a product manufactured by that company. This requirement stems from section 1502 of Public Law 111–203 (implemented at 17 CFR 240.13p–1) to ensure that such minerals are not supporting armed conflict in the Democratic Republic of Congo and adjoining countries.

The principal benefit of this proposed rule is continuing to transition the defense industrial base toward the procurement of strategic and critical materials from sources other than North Korea, Russia, Iran, or the People's Republic of China, with the latter constituting the pacing challenge identified in the National Defense Strategy. Russia is a major producer and exporter of a wide array of strategic and critical materials, and the extreme

volatility in these markets since Russia's invasion of Ukraine demonstrates the national security imperative to build resilience into supply chains for covered materials of this proposed rule.

V. Executive Orders 12866 and 13563

Executive Orders (E.O.s) 12866 and 13563 direct agencies to assess all costs and benefits of available regulatory alternatives and, if regulation is necessary, to select regulatory approaches that maximize net benefits (including potential economic, environmental, public health and safety effects, distributive impacts, and equity). E.O. 13563 emphasizes the importance of quantifying both costs and benefits, of reducing costs, of harmonizing rules, and of promoting flexibility. This is not a significant regulatory action and, therefore, was not subject to review under section 6(b) of E.O. 12866, Regulatory Planning and Review, dated September 30, 1993.

VI. Regulatory Flexibility Act

DoD does not expect this proposed rule to have a significant economic impact on a substantial number of small entities within the meaning of the Regulatory Flexibility Act, 5 U.S.C. 601, *et seq.* However, an initial regulatory flexibility analysis has been performed and is summarized as follows:

This proposed rule is required to implement section 844 of the National Defense Authorization Act (NDAA) for Fiscal Year (FY) 2021 (Pub. L. 116–283), which amends 10 U.S.C. 2533c (now 10 U.S.C. 4872) to revise the restriction on the acquisition of covered materials melted or produced in any covered country (*i.e.,* North Korea, the People's Republic of China, Russia, or Iran) to include covered materials mined, refined, separated, melted, or produced. In addition, it revises the commercially available off-the-shelf (COTS) items exception to the restriction of 50 percent or more by weight to now include all covered material and remove the individual exception to only tungsten. The term ''covered materials,'' already defined in the statute and at DFARS 225.7018–1, means samarium-cobalt magnets, neodymium-iron-boron magnets, tantalum metals and alloys, tungsten metal powder, and tungsten heavy alloy or any finished or semi-finished component containing tungsten heavy alloy.

The objective of the proposed rule is to implement section 844 of the NDAA for FY 2021. The legal basis for this proposed rule is 10 U.S.C. 4872, as amended by section 844 of the NDAA for FY 2021.

Based on data from the Federal Procurement Data System for FY 2020, 2021, and 2022, DoD awarded in the United States 22,729 contracts that exceeded the simplified acquisition threshold of $250,000 and were for the acquisition of manufactured end products, excluding those categories that could not include restricted metals (such as clothing and fabrics, books, or lumber products). These contracts were awarded to a total of 2,070 unique entities, of which 1,624 were unique small entities; contracts were awarded to a median of 527 unique small entities per year. It is not known what percentage of these awards involved the specific covered materials from China, North Korea, Russia, or Iran.

There are no projected reporting or recordkeeping requirements. However, there may be compliance costs to track the origin of covered materials.

The proposed rule does not duplicate, overlap, or conflict with any other Federal rules.

DoD is exempting acquisitions equal to or less than the simplified acquisition threshold in accordance with 41 U.S.C. 1905. DoD was unable to identify any other alternatives that would reduce burden on small businesses and still meet the objectives of the statute.

DoD invites comments from small business concerns and other interested parties on the expected impact of this rule on small entities.

DoD will also consider comments from small entities concerning the existing regulations in subparts affected by this rule in accordance with 5 U.S.C. 610. Interested parties must submit such comments separately and should cite 5 U.S.C. 610 (DFARS Case 2021–D015), in correspondence.

VII. Paperwork Reduction Act

This proposed rule does not contain any information collection requirements that require the approval of the Office of Management and Budget under the Paperwork Reduction Act (44 U.S.C. chapter 35).

List of Subjects in 48 CFR Parts 225 and 252

Government procurement.

Jennifer D. Johnson,

Editor/Publisher, Defense Acquisition Regulations System.

Therefore, 48 CFR parts 225 and 252 are proposed to be amended as follows:

■ 1. The authority citation for parts 225 and 252 continues to read as follows:

Authority: 41 U.S.C. 1303 and 48 CFR chapter 1.

PART 225—FOREIGN ACQUISITION

■ 2. Add section 225.7018–0 to read as follows:

225.7018–0 Scope.

This section implements 10 U.S.C. 4872.

■ 3. Revise section 225.7018–2 to read as follows:

225.7018–2 Restriction.

(a) *General.* Except as provided in 225.7018–3 and 225.7018–4—

(1) Effective through December 31, 2025, do not acquire any covered material melted or produced in any covered country, or any end item, manufactured in any covered country, that contains a covered material; and

(2) Effective January 1, 2026, do not acquire any covered material mined, refined, separated, melted, or produced in any covered country, or any end item, manufactured in any covered country, that contains a covered material. (Section 844, Pub. L. 116–283; 10 U.S.C. 4872.)

(b) *Samarium-cobalt magnets and neodymium-iron-boron magnets.* (1) Effective through December 31, 2025, for samarium-cobalt magnets and neodymium-iron-boron magnets, this restriction includes—

(i) Melting samarium with cobalt to produce the samarium-cobalt alloy or melting neodymium with iron and boron to produce the neodymium-iron-boron alloy; and

(ii) All subsequent phases of production of the magnets, such as powder formation, pressing, sintering or bonding, and magnetization.

(2) Effective January 1, 2026, for samarium-cobalt magnets this restriction includes the entire supply chain from mining or production of a cobalt and samarium ore or feedstock, including recycled material, through production of finished magnets, except as provided at 225.7018–3.

(3) The restriction on melting and producing of samarium-cobalt magnets is in addition to any applicable restrictions on melting of specialty metals at 225.7003 and the clause at 252.225–7009, Restriction on Acquisition of Certain Articles Containing Specialty Metals.

(4) Effective January 1, 2026, for neodymium-iron-boron magnets, this restriction includes the entire supply chain from mining of neodymium, iron, and boron through production of finished magnets, except as provided at 225.7018–3.

(c) *Tantalum metals and alloys.* (1) Effective through December 31, 2025, for production of tantalum metals of any

kind and alloys, this restriction includes the reduction or melting of any form of tantalum to create tantalum metal including unwrought, powder, mill products, and alloys. The restriction also covers all subsequent phases of production of tantalum metals and alloys.

(2) Effective January 1, 2026, for production of tantalum metals of any kind and alloys, this restriction includes mining or production of a tantalum ore or feedstock, including recycled material, through production of metals of any kind and alloys, except as provided at 225.7018–3.

(d) *Tungsten metal powder and tungsten heavy alloy.* (1) Effective through December 31, 2025, for production of tungsten metal powder and tungsten heavy alloy, this restriction includes—

(i) Atomization;

(ii) Calcination and reduction into powder;

(iii) Final consolidation of non-melt derived metal powders; and

(iv) All subsequent phases of production of tungsten metal powder, tungsten heavy alloy, or any finished or semi-finished component containing tungsten heavy alloy.

(2) Effective January 1, 2026, for production of tungsten metal powder, tungsten heavy alloy, or any finished or semi-finished component containing tungsten heavy alloy, this restriction includes mining or production of a tungsten ore or feedstock, including recycled material, through production of tungsten metal powders, except as provided at 225.7018–3.

■ 4. Amend section 225.7018–3—

■ a. By revising paragraph (c)(1); and

■ b. In paragraph (d)(1) by removing ''this contract;'' and adding ''the contract;'' in its place.

The revision reads as follows:

225.7018–3 Exceptions.

* * * * *

(c) * * *

(1) A commercially available off-the-shelf item (but see PGI 225.7018–3(c)(1) with regard to commercially available samarium-cobalt magnets), other than—

(i) A commercially available off-the-shelf item that is—

(A) 50 percent or more tungsten by weight effective through December 31, 2025; or

(B) 50 percent or more covered material by weight effective January 1, 2026;

(ii) Effective through December 31, 2025, a tantalum metal, tantalum alloy, or tungsten heavy alloy mill product, such as bar, billet, slab, wire, cube, sphere, block, blank, plate, or sheet, that has not been incorporated into an end item, subsystem, assembly, or component; or

(iii) Effective January 1, 2026, a covered material that is a mill product such as bar, billet, slab, wire, cube, sphere, block, blank, plate, or sheet, that has not been incorporated into an end item, subsystem, assembly, or component; or

* * * * *

PART 252—SOLICITATION PROVISIONS AND CONTRACT CLAUSES

■ 5. Amend section 252.225–7052 by revising the clause date and paragraphs (b) and (c)(1) to read as follows:

252.225–7052 Restriction on the Acquisition of Certain Magnets, Tantalum, and Tungsten.

* * * * *

Restriction on the Acquisition of Certain Magnets, Tantalum, and Tungsten (Date)

* * * * *

(b) *Restriction.* (1) Except as provided in paragraph (c) of this clause—

(i) Effective through December 31, 2025, the Contractor shall not deliver under this contract any covered material melted or produced in any covered country, or any end item, manufactured in any covered country, that contains a covered material; and

(ii) Effective January 1, 2026, the Contractor shall not deliver under this contract any covered material mined, refined, separated, melted, or produced in any covered country, or any end item, manufactured in any covered country, that contains a covered material (section 844, Pub. L. 116–283; 10 U.S.C. 4872).

(2)(i)(A) Effective through December 31, 2025, for samarium-cobalt magnets and neodymium-iron-boron magnets, this restriction includes—

(*1*) Melting samarium with cobalt to produce the samarium-cobalt alloy or melting neodymium with iron and boron to produce the neodymium-iron-boron alloy; and

(*2*) All subsequent phases of production of the magnets, such as powder formation, pressing, sintering or bonding, and magnetization.

(B) Effective January 1, 2026, for samarium-cobalt magnets this restriction includes the entire supply chain from mining or production of a cobalt and samarium ore or feedstock, including recycled material, through production of finished magnets.

(ii) The restriction on melting and producing of samarium-cobalt magnets is in addition to any applicable restrictions on melting of specialty metals if the clause at 252.225–7009, Restriction on Acquisition of Certain Articles Containing Specialty Metals, is included in the contract.

(3) Effective January 1, 2026, for neodymium-iron-boron magnets, this restriction includes entire supply chain from mining of neodymium, iron, and boron through production of finished magnets.

(4)(i) Effective through December 31, 2025, for production of tantalum metals of any kind and alloys, this restriction includes the reduction or melting of any form of tantalum to create tantalum metal including unwrought, powder, mill products, and alloys. The restriction also covers all subsequent phases of production of tantalum metals and alloys.

(ii) Effective January 1, 2026, for production of tantalum metals of any kind and alloys, this restriction includes mining or production of a tantalum ore or feedstock, including recycled material, through production of metals of any kind and alloys.

(5)(i) Effective through December 31, 2025, for production of tungsten metal powder and tungsten heavy alloy, this restriction includes—

(A) Atomization;

(B) Calcination and reduction into powder;

(C) Final consolidation of non-melt derived metal powders; and

(D) All subsequent phases of production of tungsten metal powder, tungsten heavy alloy, or any finished or semi-finished component containing tungsten heavy alloy.

(ii) Effective January 1, 2026, for production of tungsten metal powder, tungsten heavy alloy, or any finished or semi-finished component containing tungsten heavy alloy, this restriction includes mining or production of a tungsten ore or feedstock, including recycled material, through production of tungsten metal powders, tungsten heavy alloy, or any finished or semi-finished component containing tungsten heavy alloy.

(c) *Exceptions.* This clause does not apply—

(1) To an end item containing a covered material that is—

(i) A commercially available off-the-shelf item, other than—

(A) A commercially available off-the-shelf item that is—

(*1*) 50 percent or more tungsten by weight effective through December 31, 2025; or

(*2*) 50 percent or more covered material by weight effective January 1, 2026;

(B) Effective through December 2025, a tantalum metal, tantalum alloy, or tungsten heavy alloy mill product, such as bar, billet, slab, wire, cube, sphere, block, blank, plate, or sheet, that has not been incorporated into an end item, subsystem, assembly, or component; or

(ii) Effective January 1, 2026, a covered material that is a mill product such as bar, billet, slab, wire, cube, sphere, block, blank, plate, or sheet, that has not been incorporated into an end item, subsystem, assembly, or component; or

(iii) An electronic device, unless otherwise specified in the contract; or

(iv) A neodymium-iron-boron magnet manufactured from recycled material if the milling of the recycled material and sintering of the final magnet takes place in the United States.

* * * * *

[FR Doc. 2023–08646 Filed 4–26–23; 8:45 am]

BILLING CODE 5001–06–P

DEPARTMENT OF THE INTERIOR

Fish and Wildlife Service

50 CFR Part 17

[Docket No. FWS–R8–ES–2023–0052; FF09E21000 FXES1111090FEDR 234]

RIN 1018–BH21

Endangered and Threatened Wildlife and Plants; Threatened Status for the Bi-State Distinct Population Segment of Greater Sage-Grouse With Section 4(d) Rule and Designation of Critical Habitat

AGENCY: Fish and Wildlife Service, Interior.

ACTION: Proposed rule; reopening of the comment periods.

SUMMARY: We, the U.S. Fish and Wildlife Service (Service), announce that we are reopening the comment periods on our October 28, 2013, proposed rules to list the Bi-State distinct population segment (DPS) of greater sage-grouse (*Centrocercus urophasianus*) (hereafter Bi-State DPS) as threatened under the Endangered Species Act (Act) with a section 4(d) rule and to designate critical habitat for the Bi-State DPS. The District Court for the Northern District of California vacated our March 31, 2020, withdrawal of the October 28, 2013, proposed listing rule, and that action serves to reinstate the proposed listing rule. We will initiate a new status review to determine whether the Bi-State DPS meets the definition of an endangered or threatened species under the Act. We request new information to inform this status review. Comments previously submitted need not be resubmitted, as they will be fully considered in preparing the final determination.

DATES: The comment periods are reopened on the proposed rules that published October 28, 2013 (at 78 FR 64358 and 78 FR 64328). So that we can fully consider your comments in our final determination, submit your comments on or before June 26, 2023.

ADDRESSES:

Document availability: Documents associated with the proposed rule to list the Bi-State DPS and a related proposed rule to designate critical habitat for the DPS are available on the internet at *https://www.regulations.gov* under these dockets: FWS–R8–ES–2013–0072, FWS–R8–ES–2013–0042, FWS–R8–ES–2018–0106, and FWS–R8–ES–2018–0107, as described below in **SUPPLEMENTARY INFORMATION** under *Information Requested.*

Written comments: The docket for this reopened comment period is FWS–R8–ES–2023–0052. You may submit written comments by one of the following methods:

(1) *Electronically:* Go to the Federal eRulemaking Portal: *https://www.regulations.gov.* In the Search box, enter FWS–R8–ES–2023–0052. Then, click on the Search button. On the resulting page, in the Search panel on the left side of the screen, under the Document Type heading, click on the Proposed Rules link to locate this document. You may submit a comment by clicking on ''Comment.''

(2) *By hard copy:* Submit by U.S. mail to: Public Comments Processing, Attn: FWS–R8–ES–2023–0052, U.S. Fish and Wildlife Service, MS: PRB/3W, 5275 Leesburg Pike, Falls Church, VA 22041–3803.

We request that you send comments only by the methods described above. We will post all comments on *https://www.regulations.gov.* This generally means that we will post any personal information you provide us (see *Public Comments,* below, for more information).

FOR FURTHER INFORMATION CONTACT: Justin Barrett, Deputy Field Supervisor, U.S. Fish and Wildlife Service, Reno Fish and Wildlife Office, 1340 Financial Boulevard, Suite 234, Reno, NV 89502; telephone 775–861–6300; or facsimile 775–861–6301. Individuals in the United States who are deaf, deafblind, hard of hearing, or have a speech disability may dial 711 (TTY, TDD, or TeleBraille) to access telecommunications relay services. Individuals outside the United States should use the relay services offered within their country to make international calls to the point-of-contact in the United States.

SUPPLEMENTARY INFORMATION:

Background

On October 28, 2013, we published a proposed rule to list the Bi-State DPS in California and Nevada as a threatened species under the Endangered Species Act of 1973, as amended (''Act''; 16 U.S.C. 1531 *et seq.*), with a rule under section 4(d) of the Act (78 FR 64358). We concurrently published a proposed rule to designate critical habitat for the Bi-State DPS (78 FR 64328). On April 23, 2015, we published a withdrawal of the proposed rule to list the Bi-State DPS as a threatened species, including withdrawal of the section 4(d) and proposed critical habitat rules (80 FR 22828). That decision was based on our conclusion that the threats to the Bi-State DPS as identified in the proposed listing rule were no longer as significant as believed at the time of publication of the proposed rule and that conservation plans were ameliorating threats to the species. Thus, we concluded that the Bi-State DPS did not meet the definition of a threatened or endangered species throughout all or a significant portion of its range.

On March 9, 2016, Desert Survivors, the Center for Biological Diversity, WildEarth Guardians, and Western Watershed Project filed suit in the United States District Court for the Northern District of California. The suit challenged the withdrawal of the proposal to list the Bi-State DPS. On May 5, 2018, the court issued a decision. As the result of the court order, the April 23, 2015 (80 FR 22828), withdrawal was vacated and remanded to the Service for further consideration consistent with the order, and on April 12, 2019, we reopened the comment periods on the 2013 proposed listing and critical habitat rules (84 FR 14909).

After review of the public comments received and other information, on March 31, 2020, we published another withdrawal of the proposed rule to list the Bi-State DPS as a threatened species, including withdrawal of the proposed section 4(d) and critical habitat rules (85 FR 18054). That decision was again based on our conclusion that the threats to the Bi-State DPS as identified in the 2013 proposed listing rule were no longer as significant as believed at the time of publication of the 2013 proposed rule and that conservation plans were ameliorating threats to the species. Thus, we concluded that the Bi-State DPS did not meet the definition of a threatened or endangered species throughout all or a significant portion of its range.

On September 29, 2020, Desert Survivors, the Center for Biological Diversity, WildEarth Guardians, and Western Watershed Project filed suit in the United States District Court for the Northern District of California. The suit again challenged the withdrawal of the proposal to list the Bi-State DPS. On May 16, 2022, the court issued a decision. As the result of the court order, the March 31, 2020 (85 FR 18054), withdrawal was vacated and remanded to the Service for further consideration consistent with the order.

Current Situation

The court's action returns the rulemaking process to the proposed rule stage, and the status of the Bi-State DPS has reverted to that of a species proposed for listing for the purposes of consultation under section 7 of the Act. The court's action also reinstates the

proposed section 4(d) rule and the proposed critical habitat rule for the Bi-State DPS (78 FR 64358 and 64328; October 28, 2013). Therefore, this document notifies the public that we are reopening the comment periods on the 2013 proposed rules to list the Bi-State DPS as threatened with a section 4(d) rule and designate critical habitat. We also announce that we will be initiating an entirely new species status assessment (SSA) of the Bi-State DPS. The SSA will inform the decision of whether the Bi-State DPS meets the definition of an endangered or threatened species under the Act, or whether the species is not warranted for listing. We are targeting making a new listing determination through publication in the **Federal Register** by May 2024, which could include withdrawal, re-proposal, or a final listing status and critical habitat determination. We will accept written comments and information during this reopened comment period on our proposed rules to list the Bi-State DPS as threatened with a section 4(d) rule and designate critical habitat that were published in the **Federal Register** on October 28, 2013 (78 FR 64358 and 64328; October 28, 2013). Any listing determination we make must be made based on the best available information. To inform this status review, we request new information regarding the Bi-State DPS that has become available since the publication of the 2013 proposed rules.

Species Information

Please refer to the March 31, 2020, withdrawal of our proposed listing rule (85 FR 18054) and the 2020 Species Report (Service 2020, entire; available on the internet at *https://www.regulations.gov* under Docket No. FWS–R8–ES–2018–0106) for information about the Bi-State DPS taxonomy, habitat (sagebrush ecosystem), seasonal habitat selection, life-history characteristics, home range, life expectancy and survival rates, historical and current range distribution, population estimates and lek (sage-grouse breeding complex) counts, population trends, and land ownership information. Please also refer to our March 23, 2010, 12-month petition finding (75 FR 13910) for the greater sage-grouse for a detailed evaluation of the Bi-State DPS under our DPS policy, which published in the **Federal Register** on February 7, 1996 (61 FR 4722). For a detailed summary of previous open comment periods, please see our 2015 and 2020 withdrawals of the proposed listing rules (80 FR 22828, April 23, 2015; 85 FR 18054, March 31, 2020).

Information Requested

We will accept written comments and information during this reopened comment period on our proposed rules to list the Bi-State DPS as threatened with a section 4(d) rule and designate critical habitat that were published in the **Federal Register** on October 28, 2013 (78 FR 64358 and 78 FR 64328). We will consider information and recommendations from all interested parties. We are particularly interested in comments concerning:

(1) The Bi-State DPS's biology, range, and population trends, including:

(a) Biological or ecological requirements of the species, including habitat requirements for feeding, breeding, and sheltering;

(b) Genetics and taxonomy;

(c) Historical and current range, including distribution patterns and the locations of any additional leks or populations of this species;

(d) Historical and current population levels, and current and projected trends; and

(e) Past and ongoing conservation measures for the Bi-State DPS, its habitat, or both.

(2) Threats and conservation actions affecting the species, including:

(a) Factors that may be affecting the continued existence of the species, which may include habitat modification or destruction, overutilization, disease, predation, the inadequacy of existing regulatory mechanisms, or other natural or manmade factors.

(b) Biological, commercial trade, or other relevant data concerning any threats (or lack thereof) to this species.

(c) Existing regulations or conservation actions that may be addressing threats to this species.

(3) Additional information concerning the historical and current status of the Bi-State DPS.

(4) Information on regulations that may be necessary and advisable to provide for the conservation of the Bi-State DPS and that we can consider in developing a section 4(d) rule for the species. In particular, information concerning the extent to which we should include any of the section 9 prohibitions in the 4(d) rule or whether we should consider any additional exceptions from the prohibitions in the 4(d) rule.

(5) Whether we should add a provision to the proposed 4(d) rule that covers incidental take of the Bi-State DPS in accordance with agricultural or conservation activities consistent with the Act.

(6) Information on effectiveness of ongoing conservation measures and management actions.

(7) Information on current habitat conditions including but not limited to quality of upland and meadow or riparian sites, presence and abundance of annual invasive grasses and weeds or other increasing plants (*e.g.,* conifer trees), and recovery of previously burned sites. This information may include larger landscape-scale assessments or smaller site-specific investigations.

(8) Specific information on:

(a) The amount and distribution of habitat for the Bi-State DPS.

(b) Any additional areas occurring within the range of the species in western Nevada and eastern California that should be included in the critical habitat designation because they (i) are occupied at the time of listing and contain the physical or biological features that are essential to the conservation of the species and that may require special management considerations, or (ii) are unoccupied at the time of listing and are essential for the conservation of the species.

(c) Special management considerations or protection that may be needed in critical habitat areas we are proposing, including managing for the potential effects of climate change.

(d) To evaluate the potential to include areas not occupied at the time of listing, we particularly seek comments regarding whether occupied areas are adequate for the conservation of the species. Additionally, please provide specific information regarding whether or not unoccupied areas would, with reasonable certainty, contribute to the conservation of the species and contain at least one physical or biological feature essential to the conservation of the species. We also seek comments or information regarding whether areas not occupied at the time of listing qualify as critical habitat for the species.

(9) Land use designations and current or planned activities in the subject areas and their possible impacts on proposed critical habitat.

(10) Any probable economic, national security, or other relevant impacts of designating any area that may be included in the final designation, and the related benefits of including or excluding specific areas.

(11) Information on the extent to which the description of probable economic impacts in the draft economic analysis (available on the internet at *https://www.regulations.gov* under Docket No. FWS–R8–ES–2013–0042) is a reasonable estimate of the likely economic impacts and any additional information regarding probable

economic impacts that we should consider.

(12) Whether any specific areas we are proposing for critical habitat designation should be considered for exclusion under section 4(b)(2) of the Act, and whether the benefits of potentially excluding any specific area outweigh the benefits of including that area under section 4(b)(2) of the Act. If you think we should exclude any additional areas, please provide information supporting a benefit of exclusion.

(13) Whether we could improve or modify our approach to designating critical habitat in any way to provide for greater public participation and understanding, or to better accommodate public concerns and comments.

Prior information regarding this rulemaking action may be found in these dockets on *https://www.regulations.gov:*

Docket No.	Rulemaking actions reflected in the docket	Information available in the docket
FWS–R8–ES–2013–0072	• Proposed listing rule (78 FR 64358, October 28, 2013). • First withdrawal of the 2013 proposed listing and critical habitat rules (80 FR 22828, April 23, 2015).	• A Hierarchical Integrated Population Model for Greater Sage-Grouse in the Bi-State Distinct Population Segment, California and Nevada, 2014. • Species Status Assessment Maps by Population Management Units, January 2013. • Species Status Assessment Bi-State Distinct Population Segment of Greater Sage-Grouse, 2013. • Bi-State Action Plan, March 2012. • Greater Sage-Grouse Conservation Objectives Team Report, February 2013. • Commitment letters from Federal, State, and local partners. • Policy for Evaluation of Conservation Efforts When Making Listing Decisions (PECE) Evaluation for the Bi-State Distinct Population Segment of Greater Sage-Grouse 2012 Bi-State Action Plan. • Conference Report for the Natural Resources Conservation Service Sage-grouse Initiative, 2010.
FWS–R8–ES–2013–0042	• Proposed critical habitat rule (78 FR 64328, October 28, 2013). • First withdrawal of the 2013 proposed listing and critical habitat rules (80 FR 22828, April 23, 2015).	• Draft Economic Analysis for the Bi-State DPS of Greater Sage-Grouse, 2014. • References cited for proposed critical habitat designation.
FWS–R8–ES–2018–0106	• Reopening of the comment period on the 2013 proposed listing rule (84 FR 14909, April 12, 2019). • Second withdrawal of the 2013 proposed listing and critical habitat rules (85 FR 18054, March 31, 2020).	• Species Report for the Bi-State Distinct Population Segment of Greater Sage-Grouse, January 2020. • References cited in proposed rule withdrawal.
FWS–R8–ES–2018–0107	• Reopening of the comment period on the 2013 proposed critical habitat rule (84 FR 14909, April 12, 2019). • Second withdrawal of the 2013 proposed listing and critical habitat rules (85 FR 18054, March 31, 2020).	• References cited in proposed rule withdrawal.
FWS–R8–ES–2023–0052 (This is the docket number for this document, and comments should be submitted to this docket.).	• Reopening of the comment periods on the 2013 proposed listing rule (78 FR 64358, October 28, 2013) and proposed critical habitat rule (78 FR 64328, October 28, 2013).	

Public Comments

Please do not resubmit comments or information already provided on the proposed rules (78 FR 64358 and 64328; October 28, 2013) during the initial comment periods in 2013 or any of the subsequent comment periods (in 2014, as the result of several extensions and reopenings of the comment periods, and in 2019). Any such comments are incorporated as part of the public record of this rulemaking proceeding, and we will fully consider them in the preparation of our determination. Please note that submissions merely stating support for, or opposition to, the action under consideration without providing supporting information, although noted, do not provide substantial information necessary to support a determination. Section 4(b)(1)(A) of the Act directs that determinations as to whether any species is an endangered or a threatened species must be made solely on the basis of the best scientific and commercial data available.

You may submit your comments and materials concerning the proposed rule by one of the methods listed in **ADDRESSES**. We request that you send comments only by the methods described in **ADDRESSES**.

Comments and materials we receive will be available for public inspection on *https://www.regulations.gov* at Docket No. FWS–R8–ES–2023–0052. If you submit information via *https://www.regulations.gov,* your entire comment—including any personal identifying information—will be posted on the website. If your submission is made via a hardcopy that includes personal identifying information, you may request at the top of your document that we withhold this information from public review. However, we cannot guarantee that we will be able to do so. We will post all hardcopy submissions on *https://www.regulations.gov.*

Because we will consider all comments and information we receive during the comment period, our final determinations may differ from this proposal. Based on the new information we receive (and any comments on that new information), we may conclude that the species is endangered instead of threatened, or we may conclude that the species does not warrant listing as either an endangered species or a threatened species. For critical habitat, our final designation may not include all areas proposed, may include some additional areas that meet the definition of critical habitat, or may exclude some areas if we find the benefits of exclusion outweigh the benefits of inclusion and exclusion will not result in the extinction of the species. In addition, we may change the parameters of the prohibitions or the exceptions to those prohibitions in the proposed 4(d) rule if we conclude it is appropriate in light of comments and new information received. For example, we may expand the prohibitions to include prohibiting additional activities if we conclude that those additional activities are not compatible with conservation of the species. Conversely,

we may establish additional exceptions to the prohibitions in the final rule if we conclude that the activities would facilitate or are compatible with the conservation and recovery of the species.

Authors

The primary author of this document is the Reno Fish and Wildlife Office in Reno, Nevada, in coordination with the Pacific Southwest Regional Office in Sacramento, California.

Authority

The Endangered Species Act of 1973, as amended (16 U.S.C. 1531 *et seq.*) is the authority for this action.

Wendi Weber,

Acting Director, U.S. Fish and Wildlife Service.

[FR Doc. 2023–08848 Filed 4–26–23; 8:45 am]

BILLING CODE 4333–15–P

Notices

Federal Register

Vol. 88, No. 81

Thursday, April 27, 2023

This section of the FEDERAL REGISTER contains documents other than rules or proposed rules that are applicable to the public. Notices of hearings and investigations, committee meetings, agency decisions and rulings, delegations of authority, filing of petitions and applications and agency statements of organization and functions are examples of documents appearing in this section.

DEPARTMENT OF AGRICULTURE

Submission for OMB Review; Comment Request

The Department of Agriculture will submit the following information collection requirement(s) to OMB for review and clearance under the Paperwork Reduction Act of 1995, Public Law 104–13 on or after the date of publication of this notice. Comments are requested regarding: (1) whether the collection of information is necessary for the proper performance of the functions of the agency, including whether the information will have practical utility; (2) the accuracy of the agency's estimate of burden including the validity of the methodology and assumptions used; (3) ways to enhance the quality, utility and clarity of the information to be collected; and (4) ways to minimize the burden of the collection of information on those who are to respond, including through the use of appropriate automated, electronic, mechanical, or other technological collection techniques or other forms of information technology.

Comments regarding these information collections are best assured of having their full effect if received by May 30, 2023. Written comments and recommendations for the proposed information collection should be submitted within 30 days of the publication of this notice on the following website *www.reginfo.gov/public/do/PRAMain.* Find this particular information collection by selecting ''Currently under 30-day Review—Open for Public Comments'' or by using the search function.

An agency may not conduct or sponsor a collection of information unless the collection of information displays a currently valid OMB control number and the agency informs potential persons who are to respond to the collection of information that such persons are not required to respond to the collection of information unless it displays a currently valid OMB control number.

National Agricultural Statistics Service

Title: Agricultural Resource Management Phases 3 Economic Surveys.

OMB Control Number: 0535–NEW.

Summary of Collection: The primary functions of the National Agricultural Statistics Service (NASS) are to prepare and issue State and national estimates of crop and livestock production, disposition, and prices and to collect information on related environmental and economic factors. Detailed economic and environmental data for various crops and livestock help to maintain a stable economic atmosphere and reduce the risk for production, marketing, and distribution operations. The Agricultural Resource Management Surveys (ARMS), are the primary source of information for the U.S. Department of Agriculture on a broad range of issues related to agricultural resource use, cost of production, and farm sector financial conditions. NASS uses a variety of survey instruments to collect the information in conjunction with these studies. General authority for these data collection activities is granted under U.S. Code title 7, section 2204.

This information collection request will focus on the Agricultural Resource Management Phase 3 Surveys. The previous two phases of ARMS will be submitted as a separate information collection request. The requests are being separated to better accommodate changes requested by data users and policy makers.

Need and Use of the Information: ARMS is the only annual source of whole farm information available for objective evaluation of many critical issues related to agriculture and the rural economy, such as: Production practices for certain livestock commodities; as well as whole farm finance data, marketing information, and input usage. Without these data, decision makers cannot analyze and report on critical issues that affect farms and farm households.

Description of Respondents: Farms; Business or other for-profit.

Number of Respondents: 43,817.

Frequency of Responses: Reporting: Annually, monthly.

Total Burden Hours: 70,556.

National Agricultural Statistics Service

Title: Agricultural Resource Management Phases 1 & 2 and Chemical Use Surveys.

OMB Control Number: 0535–0218.

Summary of Collection: The primary functions of the National Agricultural Statistics Service (NASS) are to prepare and issue State and national estimates of crop and livestock production, disposition, and prices and to collect information on related environmental and economic factors. Detailed economic and environmental data for various crops and livestock help to maintain a stable economic atmosphere and reduce the risk for production, marketing, and distribution operations. The Agricultural Resource Management Surveys (ARMS), are the primary source of information for the U.S. Department of Agriculture on a broad range of issues related to agricultural resource use, cost of production, and farm sector financial conditions. NASS uses a variety of survey instruments to collect the information in conjunction with these studies. General authority for these data collection activities is granted under U.S. Code title 7, section 2204.

This information collection request will focus on the Agricultural Resource Management Phases 1 and 2 as well as Chemical Use Surveys. The ARMS Phase 3 Cost and Returns Report will be submitted as a separate information collection request. The requests are being separated to better accommodate changes requested by data users and policy makers.

Need and Use of the Information: ARMS is the only annual source of whole farm information available for objective evaluation of many critical issues related to agriculture and the rural economy. This issues that will be addressed in this request are: input usage, production practices, and chemical use. Without these data, decision makers cannot analyze and report on critical issues that affect farms and farm households when pesticide regulatory actions are being considered.

Description of Respondents: Farms; Business or other for-profit.

Number of Respondents: 114,083.

Frequency of Responses: Reporting: Annually.

Total Burden Hours: 51,222.

Levi S. Harrell,

Departmental Information Collection Clearance Officer.

[FR Doc. 2023–08925 Filed 4–26–23; 8:45 am]

BILLING CODE 3410–20–P

DEPARTMENT OF AGRICULTURE

National Agricultural Statistics Service

Notice of Intent To Request Revision and Extension of a Currently Approved Information Collection

AGENCY: National Agricultural Statistics Service, USDA.

ACTION: Notice and request for comments.

SUMMARY: In accordance with the Paperwork Reduction Act of 1995, this notice announces the intention of the National Agricultural Statistics Service (NASS) to request revision and extension of a currently approved information collection, the Agricultural Prices Surveys. Revision to burden hours will be needed due to the addition and/or deletion of surveys, changes in the size of the target population, sampling design, and/or questionnaire length.

DATES: Comments on this notice must be received by June 26, 2023 to be assured of consideration.

ADDRESSES: You may submit comments, identified by docket number 0535–0003, by any of the following methods:

- *Email: ombofficer@nass.usda.gov.* Include docket number above in the subject line of the message.
- *E-fax:* (855) 838–6382.
- *Mail:* Mail any paper, disk, or CD–ROM submissions to: Richard Hopper, NASS Clearance Officer, U.S. Department of Agriculture, Room 5336 South Building, 1400 Independence Avenue SW, Washington, DC 20250–2024.
- *Hand Delivery/Courier:* Hand deliver to: Richard Hopper, NASS Clearance Officer, U.S. Department of Agriculture, Room 5336 South Building, 1400 Independence Avenue SW, Washington, DC 20250–2024.

FOR FURTHER INFORMATION CONTACT: Kevin L. Barnes, Associate Administrator, National Agricultural Statistics Service, U.S. Department of Agriculture, (202) 720–2707. Copies of this information collection and related instructions can be obtained without charge from Richard Hopper, NASS—OMB Clearance Officer, at (202) 690–2388 or at *ombofficer@nass.usda.gov.*

SUPPLEMENTARY INFORMATION:

Title: Agricultural Prices.

OMB Control Number: 0535–0003.

Expiration Date of Approval: November 30, 2023.

Type of Request: Intent to Seek Approval to Revise and Extend an Information Collection for 3 years.

Abstract: The primary objective of the National Agricultural Statistics Service (NASS) is to prepare and issue State and national estimates of crop and livestock production, prices, and disposition; as well as economic statistics, environmental statistics related to agriculture and to conduct the Census of Agriculture.

The Agricultural Prices surveys provide data on the prices received by farmers and prices paid by them for production goods and services. NASS estimates based on these surveys are used as a Principle Economic Indicator of the United States. These price estimates are also used to compute Parity Prices in accordance with requirements of the Agricultural Adjustment Act of 1938 as amended (Title III, Subtitle A, Section 301(a)). In addition, price data are used by the Federal Crop Insurance Corporation to help determine payment rates, program option levels, and disaster programs.

Changes from the currently approved information collection include:

(1) Addition of the Tobacco Price Inquiry. The Tobacco Price Inquiry is included in the Field Crops Information Collection Request (0535–0002).

(2) Removal of the biennial hay production and sales survey. The data collected on the biennial hay survey was used to weight (by quantity) the monthly hay (alfalfa and other hay) prices to calculate the Marketing Year Average (MYA) and United States hay prices This has been replaced with assuming the % of alfalfa and other hay marketings by month by state hasn't changed from recent surveys.

(3) Addition of collecting hay prices on the Cattle on Feed Survey. The Cattle on Feed questionnaire (OMB No. 0535–0213) has a total burden of 15 minutes on the questionnaire (6 minutes for cattle on feed questions, 9 minutes for hay prices). This survey is conducted monthly and hay price questions are included to prevent separate contacts for both cattle on feed and hay price surveys. Similar methodology is used to collect hay prices on the milk production survey already included in this request.

(4) Changes in the size of the target population, sampling design, number of mailings, and/or questionnaire length.

These combined changes will decrease number of respondents by around 27,025 and burden by around 1,820 responses and 6,415 hours.

Authority: These data will be collected under authority of 7 U.S.C. 2204(a). Individually identifiable data collected under this authority are governed by Section 1770 of the Food Security Act of 1985 as amended, 7 U.S.C. 2276, which requires USDA to afford strict confidentiality to non-aggregated data provided by respondents. This Notice is submitted in accordance with the Paperwork Reduction Act of 1995 (Pub. L. 104–113) and Office of Management and Budget regulations at 5 CFR part 1320.

All NASS employees and NASS contractors must also fully comply with all provisions of the Confidential Information Protection and Statistical Efficiency Act (CIPSEA) of 2018, Title III of Public Law 115–435, codified in 44 U.S.C. Ch. 35. CIPSEA supports NASS's pledge of confidentiality to all respondents and facilitates the agency's efforts to reduce burden by supporting statistical activities of collaborative agencies through designation of NASS agents, subject to the limitations and penalties described in CIPSEA.

Estimate of Burden: Public reporting burden for this information collection is based on more than 30 individual surveys with expected responses of 5–20 minutes and frequency of 1–12 times per year. Estimated number of responses per respondent is approximately 4.1 times per year.

Respondents: Farmers and farm-related businesses.

Estimated Number of Respondents: 40,000.

Estimated Total Annual Burden on Respondents: 26,000 hours.

Copies of this information collection and related instructions can be obtained without charge from Richard Hopper, NASS Clearance Officer, at (202) 690–2388.

Comments: Comments are invited on: (a) whether the proposed collection of information is necessary for the proper performance of the functions of the agency, including whether the information will have practical utility; (b) the accuracy of the agency's estimate of the burden of the proposed collection of information including the validity of the methodology and assumptions used; (c) ways to enhance the quality, utility, and clarity of the information to be collected; and (d) ways to minimize the burden of the collection of information on those who are to respond, through the use of appropriate automated, electronic, mechanical, technological or other forms of information technology collection methods. All responses to this notice will become a matter of

public record and be summarized in the request for OMB approval.

Signed at Washington, DC, April 11, 2023.

Kevin L. Barnes,

Associate Administrator.

[FR Doc. 2023–08847 Filed 4–26–23; 8:45 am]

BILLING CODE 3410–20–P

DEPARTMENT OF AGRICULTURE

Natural Resources Conservation Service

[Docket No. NRCS–2023–0005]

Proposed Revisions to the National Handbook of Conservation Practices for the Natural Resources Conservation Service

AGENCY: Natural Resources Conservation Service, U.S. Department of Agriculture.

ACTION: Notice of availability, request for comments.

SUMMARY: The Natural Resources Conservation Service (NRCS) is giving notice that we intend to issue a series of revised conservation practice standards in the National Handbook of Conservation Practices (NHCP). NRCS is also giving the public an opportunity to provide comments on specified conservation practice standards in the NHCP.

DATES: We will consider comments that we receive by May 30, 2023.

ADDRESSES: We invite you to submit comments in response to this notice. You may submit your comments through one of the following methods below:

- *Federal eRulemaking Portal:* Go to *http://www.regulations.gov* and search for Docket ID NRCS–2023–0005. Follow the online instructions for submitting comments; or
- *Mail or Hand Delivery:* Mr. Clarence Prestwich, National Agricultural Engineer, Conservation Engineering Division, NRCS, USDA, 1400 Independence Avenue, South Building, Room 4636, Washington, DC 20250. In your comment, please specify the Docket ID NRCS–2023–0005.

All comments received will be made publicly available on *http://www.regulations.gov.*

The copies of the proposed revised standards are available through *http://www.regulations.gov* by accessing Docket No. NRCS–2023–0005. Alternatively, the proposed revised standards can be downloaded or printed from *https://www.nrcs.usda.gov/getting-assistance/conservation-practices.*

FOR FURTHER INFORMATION CONTACT: Mr. Clarence Prestwich; telephone: (202) 720–2972, or email: *clarence.prestwich@usda.gov.* Individuals who require alternative means for communication should contact the U.S. Department of Agriculture (USDA) Target Center at (202) 720–2600 (voice).

SUPPLEMENTARY INFORMATION:

Background

NRCS plans to revise the conservation practice standards in the NHCP. This notice provides an overview of the planned changes and gives the public an opportunity to offer comments on the specific conservation practice standards and NRCS's proposed changes.

NRCS State Conservationists who choose to adopt these practices in their States will incorporate these practices into the respective electronic Field Office Technical Guide. These practices may be used in conservation systems that treat highly erodible land (HEL) or on land determined to be wetland. Section 343 of the Federal Agriculture Improvement and Reform Act of 1996 (Pub. L. 104–127) requires NRCS to make available for public review and comment all proposed revisions to conservation practice standards used to carry out HEL and wetland provisions of the law.

Revisions to the National Handbook of Conservation Practices

The amount of the proposed changes varies considerably for each of the conservation practice standards addressed in this notice. To fully understand the proposed changes, individuals are encouraged to compare these changes with each standard's current version, which can be found at: *https://www.nrcs.usda.gov/resources/guides-and-instructions/conservation-practice-standards.*

NRCS is requesting comments on the following conservation practice standards:

- Anaerobic Digester (Code 366);
- Drainage Water Management (Code 554);
- Irrigation and Drainage Tailwater Recovery (Code 447);
- Pond Sealing or Lining, Geomembrane or Geosynthetic Clay Liner (Code 521);
- Roofs and Covers (Code 367); and
- Surface Drain, Main or Lateral (Code 608).

The following are highlights of some of the proposed changes to each standard:

Anaerobic Digester (Code 366): Reorganized requirements and clarified wording and formatting to increase readability of the standard. Aligned criteria with other Conservation Practice Standards and planning criteria to maintain consistency. Strengthened requirements to account for effects of nutrients and hazardous gases when implementing anaerobic digesters. Incorporated a limited allowance for emergency venting of biogas when the operation of a flare would lead to an exceedance of local air pollution regulations.

Drainage Water Management (Code 554): Clarified wording and formatting to increase readability of the standard. Added text to general criteria section that the project is required to comply with Federal, State, Tribal, and local laws, and regulations. Also clarified within general criteria section the allowance of manual and automation technology. Added text to the additional criteria to ''Reduce Nutrient, Pathogen, and Pesticide Loading'' section.

Irrigation and Drainage Tailwater Recovery (Code 447): Clarified wording and formatting to increase readability of the standard. Added text to general criteria section that the project is required to comply with Federal, state, tribal, and local laws, and regulations. The water quality practice purpose was clarified to include downstream drinking water source improvement.

Pond Sealing or Lining, Geomembrane or Geosynthetic Clay Liner (Code 521): Revised the materials table; the gas venting, water drainage, and leak detection criteria; and the slope requirements. Also, added new considerations on safety, leak detection, and liner protection.

Roofs and Covers (Code 367): Clarified wording and formatting to increase readability of the standard. The purpose was updated to be consistent with the resource concern list. The allowable flexible cover material thickness was updated based on industry standard change.

Surface Drain, Main or Lateral (Code 608): Added statement that the project is required to comply with all Federal, State, Tribal and local laws, rules, and regulations. Removed statement on wetland determinations to make the standard more consistent with other drainage standards. Added other minor changes to improve clarity and readability.

USDA Non-Discrimination Policy

In accordance with Federal civil rights law and USDA civil rights regulations and policies, USDA, its agencies, offices, and employees, and institutions participating in or administering USDA programs are prohibited from discriminating based on

race, color, national origin, religion, sex, gender identity (including gender expression), sexual orientation, disability, age, marital status, family or parental status, income derived from a public assistance program, political beliefs, or reprisal or retaliation for prior civil rights activity, in any program or activity conducted or funded by USDA (not all bases apply to all programs). Remedies and complaint filing deadlines vary by program or incident.

Individuals who require alternative means of communication for program information (for example, braille, large print, audiotape, American Sign Language, etc.) should contact the responsible agency or USDA's TARGET Center at (202) 720–2600 (voice and text telephone (TTY)) or dial 711 for Telecommunicaions Relay Service (both voice and text telephone users can initiate this call from any phone). Additionally, program information may be made available in languages other than English.

To file a program discrimination complaint, complete the USDA Program Discrimination Complaint Form, AD–3027, found online at *https://www.usda.gov/oascr/how-to-file-a-program-discrimination-complaint* and at any USDA office, or write a letter addressed to USDA and provide in the letter all the information requested in the form. To request a copy of the complaint form, call (866) 632–9992. Submit your completed form or letter to USDA by mail to: U.S. Department of Agriculture, Office of the Assistant Secretary for Civil Rights, 1400 Independence Avenue SW, Washington, DC 20250–9410 or email to *program.intake@usda.gov.*

USDA is an equal opportunity provider, employer, and lender.

Louis Aspey,

Associate Chief, Natural Resources Conservation Service.

[FR Doc. 2023–08842 Filed 4–26–23; 8:45 am]

BILLING CODE 3410–16–P

DEPARTMENT OF COMMERCE

International Trade Administration

Announcement of Approved International Trade Administration Trade Mission

AGENCY: International Trade Administration, Department of Commerce.

SUMMARY: The United States Department of Commerce, International Trade Administration (ITA), is announcing one upcoming trade mission that will be recruited, organized, and implemented by ITA. This mission is: Trade Mission to Canada and Mexico—September 17–22, 2023. A summary of the mission is found below. Application information and more detailed mission information, including the commercial setting and sector information, can be found at the trade mission website: *https://www.trade.gov/trade-missions.* For each mission, recruitment will be conducted in an open and public manner, including publication in the **Federal Register,** posting on the Commerce Department trade mission calendar (*https://www.trade.gov/trade-missions-schedule*) and other internet websites, press releases to general and trade media, direct mail, broadcast fax, notices by industry trade associations and other multiplier groups, and publicity at industry meetings, symposia, conferences, and trade shows.

FOR FURTHER INFORMATION CONTACT: Jeffrey Odum, Events Management Task Force, International Trade Administration, U.S. Department of Commerce, 1401 Constitution Avenue NW, Washington DC 20230; telephone (202) 482–6397 or email *Jeffrey.Odum@trade.gov.*

SUPPLEMENTARY INFORMATION:

The Following Conditions for Participation Will Be Used for the Mission

Applicants must submit a completed and signed mission application and supplemental application materials, including adequate information on their products and/or services, primary market objectives, and goals for participation that is adequate to allow the Department of Commerce to evaluate their application. If the Department of Commerce receives an incomplete application, the Department of Commerce may either: reject the application, request additional information/clarification, or take the lack of information into account when evaluating the application. If the requisite minimum number of participants is not selected for a particular mission by the recruitment deadline, the mission may be cancelled.

Each applicant must also certify that the products and services it seeks to export through the mission are either produced in the United States, or, if not, are marketed under the name of a U.S. firm and have at least fifty-one percent U.S. content by value. In the case of a trade association or organization, the applicant must certify that, for each firm or service provider to be represented by the association/organization, the products and/or services the represented firm or service provider seeks to export are either produced in the United States or, if not, marketed under the name of a U.S. firm and have at least 51% U.S. content.

A trade association/organization applicant must certify to the above for every company it seeks to represent on the mission. In addition, each applicant must:

- Certify that the products and services that it wishes to market through the mission would be in compliance with U.S. export controls and regulations;
- Certify that it has identified any matter pending before any bureau or office in the Department of Commerce;
- Certify that it has identified any pending litigation (including any administrative proceedings) to which it is a party that involves the Department of Commerce; and
- Sign and submit an agreement that it and its affiliates (1) have not and will not engage in the bribery of foreign officials in connection with a company's/participant's involvement in this mission, and (2) maintain and enforce a policy that prohibits the bribery of foreign officials.

In the case of a trade association/organization, the applicant must certify that each firm or service provider to be represented by the association/organization can make the above certifications.

The Following Selection Criteria Will Be Used for the Mission

Targeted mission participants are U.S. firms, services providers and trade associations/organizations providing or promoting U.S. products and services that have an interest in entering or expanding their business in the mission's destination country. The following criteria will be evaluated in selecting participants:

- Suitability of the applicant's (or in the case of a trade association/organization, represented firm's or service provider's) products or services to these markets;
- The applicant's (or in the case of a trade association/organization, represented firm's or service provider's) potential for business in the markets, including likelihood of exports resulting from the mission; and
- Consistency of the applicant's (or in the case of a trade association/organization, represented firm's or service provider's) goals and objectives with the stated scope of the mission. Balance of company size and location may also be considered during the review process.

Referrals from a political party or partisan political group or any information, including on the application, containing references to political contributions or other partisan political activities will be excluded from the application and will not be considered during the selection process. The sender will be notified of these exclusions. The Department of Commerce will evaluate applications and inform applicants of selection decisions on a rolling basis until the maximum number of participants has been selected.

Trade Mission Participation Fees

If and when an applicant is selected to participate on a particular mission, a payment to the Department of Commerce in the amount of the designated participation fee below is required. Upon notification of acceptance to participate, those selected have 5 business days to submit payment or the acceptance may be revoked.

Participants selected for a trade mission will be expected to pay for the cost of personal expenses, including, but not limited to, international travel, lodging, meals, transportation, communication, and incidentals, unless otherwise noted. Participants will, however, be able to take advantage of U.S. Government rates for hotel rooms. In the event that a mission is cancelled, no personal expenses paid in anticipation of a mission will be reimbursed. However, participation fees for a cancelled mission will be reimbursed to the extent they have not already been expended in anticipation of the mission.

Trade mission members participate in trade missions and undertake mission-related travel at their own risk. The nature of the security situation in a given foreign market at a given time cannot be guaranteed. The U.S. Government does not make any representations or guarantees as to the safety or security of participants. The U.S. Department of State issues U.S. Government international travel alerts and warnings for U.S. citizens available at *https://travel.state.gov/content/travel/en/traveladvisories/traveladvisories.html/.* Any question regarding insurance coverage must be resolved by the participant and its insurer of choice.

Definition of Small- and Medium-Sized Enterprise

For purposes of assessing participation fees, an applicant is a small or medium-sized enterprise (SME) if it qualifies as a ''small business'' under the Small Business Administration's (SBA) size standards (*https://www.sba.gov/document/support-table-size-standards*), which vary by North American Industry Classification System (NAICS) Code. The SBA Size Standards Tool (*https://www.sba.gov/size-standards*) can help you determine the qualifications that apply to your company.

Important Note About the Covid–19 Pandemic

Travel and in-person activities are contingent upon the safety and health conditions in the United States and the mission countries. Should safety or health conditions not be appropriate for travel and/or in-person activities, the Department will consider postponing the event or offering a virtual program in lieu of an in-person agenda. In the event of a postponement, the Department will notify the public and applicants previously selected to participate in this mission will need to confirm their availability but need not reapply. Should the decision be made to organize a virtual program, the Department will adjust fees, accordingly, prepare an agenda for virtual activities, and notify the previously selected applicants with the option to opt-in to the new virtual program.

Mission List: (additional information about trade missions can be found at *https://www.trade.gov/trade-missions*).

Trade Mission to Canada and Mexico—September 17–22, 2023

Summary

The United States Department of Commerce, International Trade Administration is organizing a trade mission to Canada and Mexico from September 17–22, 2023, that will include the *Business Opportunities in the Americas Conference* in Washington, DC on September 17–22, 2023.

The United States, Canada, and Mexico share common interests in strengthening regional economic growth, prosperity and competitiveness, and understand that North American competitiveness underpins the future prosperity, security and sustainability of all three countries.

Trade mission participants will arrive in Washington, DC to attend the opening reception for the *Business Opportunities in the Americas Conference* on September 17, which is also open to U.S. companies not participating in the trade mission. The U.S. Department of Commerce's *Business Opportunities in the Americas Conference* will focus on regional and industry-specific sessions, and will gather experts on market entry strategies, logistics, procurement, trade financing and other important topics.

On Sunday, September 17, trade mission participants will participate in the Conference in one-on-one meetings (U.S. diplomats and/or industry specialists from 24 U.S. Embassies will be available) and a trade mission briefing in addition to a networking reception. On Monday, September 18, participants will engage in the main business conference that will include a plenary session in the morning, a networking lunch, workshops and one-one meetings with U.S. diplomats and/or industry specialists from 24 U.S. Embassies in the afternoon, and the main networking reception in the evening. On the last day of the Conference, Tuesday, September 19, participants will engage in workshops in the morning, a networking lunch, and one-one meetings throughout the day. Trade mission participants will travel on Wednesday, September 20 to engage in business-to-business (B2B) appointments on Thursday, September 21 with pre-screened potential buyers, agents, distributors or joint-venture partners, in the selected city/stop in Canada and/or Mexico.

The U.S. Commercial Service Canada and/or Mexico also will be offering to arrange B2B meetings through November 30, 2023 on a first-come, first-served basis in the various mission stops in Mexico and Canada for trade mission applicants that are waitlisted. U.S. exporters interested in business-to-business meetings or other services in these markets after November 30th should contact their local U.S. Export Assistance Center.

One-on-one meetings will be pre-scheduled with the available U.S. diplomats and/or industry specialists from 24 U.S. Embassies in the Western Hemisphere region, as well as key service providers and other trade related resources. U.S. Embassies participating in the event are from the following countries: Argentina, Barbados, Belize, Bolivia, Brazil, Canada, Chile, Colombia, Costa Rica, Dominican Republic, Ecuador, El Salvador, Guatemala, Guyana, Honduras, Jamaica, Mexico, Panama, Paraguay, Peru, Suriname, The Bahamas, Trinidad & Tobago, and Uruguay.

The mission is open to U.S. companies from industries with growing potential in Canada and Mexico. Best prospects sectors for U.S. companies in Canada and Mexico are: Aerospace and Defense; Agribusiness; Automotive; Construction; Cosmetics; Defense Equipment; Education and Training;

Electricity Sector; Energy; Environmental Technologies; Financial Technologies (Fintech) Industry; Healthcare Products & Services; Information and Communications Technology (ICT); Medical Devices; Mining and Minerals; Oil and Gas; Packaging; Machinery Industry; Plastics and Resins; Renewable Energy; Safety and Security; Transportation Infrastructure; Equipment and Services; and Travel and Tourism.

Proposed Timetable

**Note:* The final schedule and potential site visits will depend on the availability of host government and business officials, specific goals of mission participants, and ground transportation.

Sunday, September 17, 2023	Washington, DC. *Afternoon:* Registration, One-on-One Meetings Markets Briefing. Evening: Networking Reception.
Monday, September 18, 2023	Washington, DC. *Morning:* Registration, Business Conference, Networking Break. *Afternoon:* Networking Lunch, One-on-One Meetings, and Workshops.
Tuesday, September 19, 2023	Washington, DC. *Morning:* Workshops and One-on-One Meetings. Afternoon: Networking Lunch and One-on-One Meetings.
B2B Meetings Options	
Wednesday, September 20, 2023	Travel Day for B2B Meetings.
Thursday, September 21, 2023	B2B Meetings in (up to two cities/markets): Option (A) Toronto, Canada. Option (B) Montreal, Canada. Option (C) Ottawa, Canada. Option (D) Calgary, Canada. Option (E) Mexico City, Mexico. Option (F) Guadalajara, Mexico. Option (G) Monterrey, Mexico.
Friday, September 22, 2023	Travel Day. Return to the U.S.

Participation Requirements

All parties interested in participating in the trade mission must submit an application package for consideration by the Department of Commerce. All applicants will be evaluated on their ability to meet certain conditions and best satisfy the selection criteria as outlined below. A minimum of thirty and maximum of fifty companies and/or trade associations will be selected to participate in the mission on a rolling basis. All selected participants will attend the business conference in Washington, DC and will have the opportunity to have business-to-business meetings in up-to two cities in Canada and/or Mexico.

The number of firms that may be selected for each stop are as follows: 10 companies for Toronto; 5 companies for Montreal; 10 companies for Ottawa and 4 companies for Calgary; 15 companies for Mexico City; 3 companies for Monterrey; and 3 companies for Guadalajara.

Fees and Expenses

After a firm or trade association has been selected to participate on the mission, a payment to the Department of Commerce in the form of a participation fee is required. The fees are as follow:

If only one stop is selected for B2B meetings, the participation fee will be $2,800 for a small or medium-sized enterprises (SME) [1] and $4,000 for large firms.

If two stops are selected for B2B meetings, the participation fee will be $3,800 for a small or medium-sized enterprises (SME) [1] and $5,000 for large firms.

The mission participation fee includes the *Business Opportunities in the Americas Conference,* registration fee of $650 per participant from each firm.

There will be a $300 fee for each additional firm representative (large firm or SME) that wishes to participate in B2B meetings in any of the stops selected.

If an applicant is selected to participate on a particular mission, a payment to the Department of Commerce in the amount of the designated participation fee is required. Upon notification of acceptance to participate, those selected have 5 business days to submit payment or the acceptance may be revoked. Participants selected for a trade mission will be expected to pay for the cost of personal expenses, including, but not limited to, international travel, lodging, meals, transportation, communication, and incidentals, unless otherwise noted. Participants will, however, be able to take advantage of U.S. Government rates for hotel rooms. In the event that a mission is cancelled, no personal expenses paid in anticipation of a mission will be reimbursed. However, participation fees for a cancelled mission will be reimbursed to the extent they have not already been expended in anticipation of the mission.

If a visa is required to travel on a particular mission, applying for and obtaining such a visa will be the responsibility of the mission participant. Government fees and processing expenses to obtain such a visa are not included in the participation fee. However, the Department of Commerce will provide instructions to each participant on the procedures required to obtain business visas.

Trade mission members participate in trade missions and undertake mission-related travel at their own risk. The nature of the security situation in a given foreign market at a given time cannot be guaranteed. The U.S. Government does not make any representations or guarantees as to the safety or security of participants. The U.S. Department of State issues U.S. Government international travel alerts and warnings for U.S. citizens available at *https://travel.state.gov/content/passports/en/alertswarnings.html.* Any question regarding insurance coverage must be resolved by the participant and its insurer of choice.

Timeframe for Recruitment and Applications

Mission recruitment will be conducted in an open and public manner, including publication in the **Federal Register**, posting on the Department of Commerce trade mission calendar (*http://export.gov/trademissions*) and other internet websites, press releases to general and trade media, direct mail, notices by industry trade associations and other multiplier groups, and publicity at industry meetings, symposia, conferences, and trade shows. Recruitment for the mission will begin

immediately and conclude no later than July 28th, 2023. The Department of Commerce will evaluate applications and inform applicants of selection decisions on a rolling basis until the maximum number of participants has been selected. Applications received after July 28th, 2023, will be considered only if space and scheduling constraints permit.

Contacts

U.S. Trade Americas Team Contact Information

Diego Gattesco, Director/Trade Americas Team Leader—U.S. Commercial Service Wheeling, WV; *Diego.Gattesco@trade.gov;* Tel: 304–243–5493

CS Canada Contact Information

John Fleming, Deputy Senior Commercial Officer—U.S. Embassy Ottawa, Canada; *John.Fleming@trade.gov* Tel: (613) 724–0048

CS Mexico Contact Information

Kenneth Duckworth, Commercial Officer—U.S. Embassy Mexico City, Mexico; *Kenneth.Duckworth@trade.gov* Tel: (52) (55) 7980–9576

Gemal Brangman,

Director, ITA Events Management Task Force.

[FR Doc. 2023–08951 Filed 4–26–23; 8:45 am]

BILLING CODE 3510–DR–P

DEPARTMENT OF COMMERCE

United States Patent and Trademark Office

[Docket No. PTO–T–2023–0016]

Trademark Public Advisory Committee Public Hearing on the Proposed Trademark Fee Schedule

AGENCY: United States Patent and Trademark Office, Department of Commerce.

ACTION: Notice of public hearing.

SUMMARY: The United States Patent and Trademark Office (USPTO) is announcing the date, time, and place of a public hearing that will be held by the Trademark Public Advisory Committee (TPAC) on the USPTO's proposed setting or adjusting of trademark fees pursuant to the USPTO's fee setting authority under section 10 of the Leahy-Smith America Invents Act (AIA). The USPTO will make its proposed trademark fees available—as set forth in the **SUPPLEMENTARY INFORMATION** section of this notice—before the TPAC hearing. The public is invited to testify at the hearing and submit written comments regarding proposed trademark fees.

DATES: A hybrid public hearing will be held on Monday, June 5, 2023, from 1–3 p.m. ET. The USPTO will publish a proposed trademark fee schedule and related supplementary information for public viewing no later than May 19, 2023, on the fee setting and adjusting section of the USPTO website, *www.uspto.gov/FeeSettingAndAdjusting.* Anyone wishing to present oral testimony at the hearing must submit a written request for an opportunity to do so no later than May 26, 2023. Written comments on proposed trademark fees will be accepted until June 12, 2023.

ADDRESSES: The public hearing will be held in person in the Clara Barton Auditorium at the USPTO, 600 Dulany Street, Alexandria, Virginia 22314. The hearing will also be available via live feed for those wishing to attend remotely. Information on remote attendance will be posted on the TPAC section of the USPTO website, *www.uspto.gov/tpac,* before the hearing.

Requests To Present Oral Testimony

The public is invited to testify at the TPAC hearing regarding proposed trademark fees. Anyone wishing to present oral testimony at the hearing must submit a request in writing no later than May 26, 2023. Requests to testify should indicate:

A. The name of the person wishing to testify;

B. The person's contact information (telephone number and email address);

C. The organization(s) the person represents, if any;

D. An indication of the amount of time needed for the testimony; and

E. An indication of whether testimony will be provided in person or remotely.

Speaking slots are limited, and the USPTO may be unable to honor all requests. Requests to testify must be submitted by email to Charles Joyner at *TMExec@uspto.gov.* If more requests to provide oral testimony are received than time allows, requestors will be invited to submit written comments. Time slots will be at least five minutes each. Speakers providing testimony at the hearing should submit a written copy of their testimony for inclusion in the record of the proceedings no later than June 12, 2023.

An agenda for witness testimony will be sent to testifying requesters and posted on the fee setting and adjusting section of the USPTO website, *www.uspto.gov/FeeSettingAndAdjusting.* If time permits, the TPAC may permit unscheduled testimony as well.

The hearing will be physically accessible to people with disabilities. Individuals requiring accommodation, such as sign language interpretation or other ancillary aids, should communicate their needs to the individuals listed under the **FOR FURTHER INFORMATION CONTACT** section of this notice at least seven (7) business days prior to the hearing.

Written Comments

Written comments on proposed trademark fees must be submitted through the Federal eRulemaking Portal at *www.regulations.gov.* To submit comments via the portal, commenters should enter docket number PTO–T–2023–0016 on the homepage and select the Search button. The site will provide search results listing all documents associated with this docket. Commenters can find a reference to this document and select the Comment icon, complete the required fields, and enter or attach their comments. Attachments to electronic comments will be accepted in Adobe portable document format (PDF) or Microsoft Word format. Information that you do not want to make public, such as an address or phone number, should not be included in the comments to protect your privacy.

Visit the Federal eRulemaking Portal for additional instructions on providing comments via the portal. If electronic submission of comments is not possible, please contact the USPTO using the contact information below at the **FOR FURTHER INFORMATION CONTACT** section of this notice for special instructions.

Recordings

A recording of the public hearing will be posted on the fee setting and adjusting section of the USPTO website, *www.uspto.gov/FeeSettingAndAdjusting,* shortly after the hearing.

Transcripts

A transcript of the hearing will be available on the fee setting and adjusting section of the USPTO website, *www.uspto.gov/FeeSettingAndAdjusting,* shortly after the hearing.

FOR FURTHER INFORMATION CONTACT: Brendan Hourigan, Director, Office of Planning and Budget, at 571–272–8966, or at *Brendan.Hourigan@uspto.gov;* or Dianne Buie, Director, Forecasting and Analysis Division, at 571–272–6301, or at *Dianne.Buie@uspto.gov.*

SUPPLEMENTARY INFORMATION: The USPTO is authorized under section 10 of the AIA to set or adjust by rule all patent and trademark fees established, authorized, or charged under title 35 of the United States Code and the Trademark Act of 1946, respectively. This authority was extended through

September 15, 2026, by the Study of Underrepresented Classes Chasing Engineering and Science Success Act of 2018 (Pub. L. 115–273). Patent and trademark fees set or adjusted by rule under section 10 of the AIA may only recover the aggregate estimated costs to the USPTO for processing, activities, services, and materials relating to patents and trademarks, respectively, including administrative costs of the office with respect to each. Congress set forth the process for the USPTO to follow in setting or adjusting patent and trademark fees by rule under section 10 of the AIA, including additional procedural steps in the rulemaking proceeding for the issuance of regulations under this section. Congress requires the relevant advisory committee to hold a public hearing regarding proposed fees after receiving them from the USPTO. Congress, likewise, requires the relevant advisory committee to prepare a written report on proposed fees and the USPTO to consider the relevant advisory committee's report before setting or adjusting fees.

The USPTO is planning to exercise its fee setting authority to set or adjust trademark fees. The USPTO will publish a proposed trademark fee schedule and related supplementary information for public viewing no later than May 19, 2023, on the fee setting and adjusting section of the USPTO website, *www.uspto.gov/FeeSettingAnd Adjusting.* The TPAC will hold a public hearing regarding the proposed trademark fee schedule on the date indicated in this notice. The USPTO will assist the TPAC in holding the hearing by providing resources to organize the hearing and notifying the public. Following the TPAC public hearing and considering all comments, advice, and recommendations, the USPTO, if it continues with the fee setting process, will publish a Notice of Proposed Rulemaking in the **Federal Register**, setting forth its proposed trademark fees.

Katherine K. Vidal,

Under Secretary of Commerce for Intellectual Property and Director of the United States Patent and Trademark Office.

[FR Doc. 2023–08906 Filed 4–26–23; 8:45 am]

BILLING CODE 3510–16–P

CONSUMER FINANCIAL PROTECTION BUREAU

[Docket No. CFPB–2023–0031]

Agency Information Collection Activities: Comment Request

AGENCY: Consumer Financial Protection Bureau.

ACTION: Notice and request for comment.

SUMMARY: In accordance with the Paperwork Reduction Act of 1995 (PRA), the Consumer Financial Protection Bureau (Bureau or CFPB) is requesting the Office of Management and Budget's (OMB's) approval for a new information collection titled ''Student Loan Survey.''

DATES: Written comments are encouraged and must be received on or before June 26, 2023 to be assured of consideration.

ADDRESSES: You may submit comments, identified by the title of the information collection, OMB Control Number (see below), and docket number (see above), by any of the following methods:

- *Federal eRulemaking Portal: http://www.regulations.gov.* Follow the instructions for submitting comments.
- *Email: PRA_Comments@cfpb.gov.* Include Docket No. CFPB–2023–0031 in the subject line of the email.
- *Mail/Hand Delivery/Courier:* Comment Intake, Consumer Financial Protection Bureau (Attention: PRA Office), 1700 G Street NW, Washington, DC 20552. Because paper mail in the Washington, DC area and at the Bureau is subject to delay, commenters are encouraged to submit comments electronically.

Please note that comments submitted after the comment period will not be accepted. In general, all comments received will become public records, including any personal information provided. Sensitive personal information, such as account numbers or Social Security numbers, should not be included.

FOR FURTHER INFORMATION CONTACT: Requests for additional information should be directed to Anthony May, PRA Officer, at (202) 435–7278, or email: *CFPB_PRA@cfpb.gov.* If you require this document in an alternative electronic format, please contact *CFPB_Accessibility@cfpb.gov.* Please do not submit comments to these email boxes.

SUPPLEMENTARY INFORMATION:

Title of Collection: Student Loan Survey.

OMB Control Number: 3170–00XX.

Type of Review: New information collection.

Affected Public: Individuals or households.

Estimated Number of Respondents: 3,750.

Estimated Total Annual Burden Hours: 1,238.

Abstract: Under the Dodd-Frank Wall Street Reform and Consumer Protection Act, the Bureau is charged with researching, analyzing, and reporting on topics including consumer behavior, consumer awareness, and developments in markets for consumer financial products and services. To improve its understanding of how consumers engage with financial markets, the Bureau has successfully used credit record data as a sampling frame to survey people about their experiences in consumer credit markets.

The Bureau now seeks to obtain approval for a new survey of student loan borrowers to understand their borrowing decisions, their experience managing their loans, and their expectations for the future. The survey will be sent to a random sample selected from individuals in the Bureau's new Consumer Credit Information Panel (CCIP) which is itself a sample of de-identified credit records from one of the nationwide consumer reporting agencies. The survey responses will be matched to the Bureau's CCIP data to provide a more complete picture of borrowers' financial standings. The survey will follow similar methods as in the Bureau's prior Making Ends Meet Survey (approved under OMB Control Number 3170–0066) and Consumer Views on Debt Survey (approved under OMB Control Number 3170–0047) but sample a different population of borrowers and focus primarily on student loans. The Bureau expects to recruit about 15,000 participants to participate in the survey. The Bureau will collect demographics, measures of financial well-being, consumers' feelings about their financial well-being, experiences with the student loan system, and behavioral measures related to seeking out financial information or willingness to take financial-related actions.

Request for Comments: Comments are invited on: (a) Whether the collection of information is necessary for the proper performance of the functions of the Bureau, including whether the information will have practical utility; (b) The accuracy of the Bureau's estimate of the burden of the collection of information, including the validity of the methods and the assumptions used; (c) Ways to enhance the quality, utility, and clarity of the information to be collected; and (d) Ways to minimize the burden of the collection of information on respondents, including through the use of automated collection techniques

or other forms of information technology. Comments submitted in response to this notice will be summarized and/or included in the request for OMB's approval. All comments will become a matter of public record.

Anthony May,

Paperwork Reduction Act Officer, Consumer Financial Protection Bureau.

[FR Doc. 2023–08822 Filed 4–26–23; 8:45 am]

BILLING CODE 4810–AM–P

CORPORATION FOR NATIONAL AND COMMUNITY SERVICE

Agency Information Collection Activities; Comment Request; Application Package for AmeriCorps Seniors Applications Instructions, Progress Reporting, Independent Living and Respite Surveys

AGENCY: Corporation for National and Community Service.

ACTION: Notice of information collection; request for comment.

SUMMARY: In accordance with the Paperwork Reduction Act of 1995, the Corporation for National and Community Service (operating as AmeriCorps) is proposing to renew an information collection.

DATES: Written comments must be submitted to the individual and office listed in the **ADDRESSES** section June 26, 2023.

ADDRESSES: You may submit comments, identified by the title of the information collection activity, by any of the following methods:

(1) Electronically through *www.regulations.gov* (preferred method).

(2) *By mail sent to:* AmeriCorps, Attention Robin Corindo, 250 E Street SW, Washington, DC 20525.

(3) By hand delivery or by courier to the AmeriCorps mailroom at the mail address given in paragraph (2) above, between 9 a.m. and 4 p.m. Eastern Time, Monday through Friday, except Federal holidays.

Comments submitted in response to this notice may be made available to the public through *regulations.gov*. For this reason, please do not include in your comments information of a confidential nature, such as sensitive personal information or proprietary information. If you send an email comment, your email address will be automatically captured and included as part of the comment that is placed in the public docket and made available on the internet. Please note that responses to this public comment request containing any routine notice about the confidentiality of the communication will be treated as public comment that may be made available to the public, notwithstanding the inclusion of the routine notice.

FOR FURTHER INFORMATION CONTACT: Robin Corindo, 202–489–5578, or by email at *RCorindo@cns.gov.*

SUPPLEMENTARY INFORMATION:

Title of Collection: Application Instructions and Progress Reporting.

OMB Control Number: 3045–0035.

Type of Review: Renewal with change.

Respondents/Affected Public: Businesses and Organizations OR State, Local or Tribal Governments.

*Total Estimated Number of Annual Responses:*1,250.

Total Estimated Number of Annual Burden Hours: 6,250 hours.

Abstract: The AmeriCorps Seniors Grant Application is for use by prospective and existing sponsors of AmeriCorps Seniors projects under the AmeriCorps Seniors RSVP (RSVP), AmeriCorps Seniors Foster Grandparent Program (FGP), AmeriCorps Seniors Senior Companion Program (SCP), and AmeriCorps Seniors Senior Demonstration Program SDP (SDP).

The Project Progress Report and Project Report Supplement will be used to report progress toward accomplishing work plan goals and objectives, reporting volunteer and service outputs, reporting actual outcomes related to self-nominated performance measures, meeting challenges encountered, describing significant activities, and requesting technical assistance.

The Application Instructions and PPR and PRS forms in this package conform to AmeriCorps' web-based electronic grants management system.

The SCP Independent Living Survey and SCP Respite Survey are instruments that collect information from a sample of Senior Companion clients and caregivers. The purpose of the surveys is to assess the feasibility of conducting a longitudinal, quasi-experimental evaluation of the impact of independent living and respite services on clients' social ties and perceived social support. The results of the surveys may also be used to inform the feasibility of using a similar instrument to measure client and caregiver outcomes for an evaluation of RSVP.

AmeriCorps also seeks to continue using the currently approved information collection until the revised information collection is approved by OMB. The currently approved information collection is due to expire on 11/30/2025.

Comments submitted in response to this notice will be summarized and/or included in the request for OMB approval. Comments are invited on: (a) Whether the collection of information is necessary for the proper performance of the functions of the agency, including whether the information shall have practical utility; (b) the accuracy of the agency's estimate of the burden of the collection of information; (c) ways to enhance the quality, utility, and clarity of the information to be collected; (d) ways to minimize the burden of the collection of information on respondents, including through the use of automated collection techniques or other forms of information technology; and (e) estimates of capital or start-up costs and costs of operation, maintenance, and purchase of services to provide information. Burden means the total time, effort, or financial resources expended by persons to generate, maintain, retain, disclose or provide information to or for a Federal agency. This includes the time needed to review instructions; to develop, acquire, install and utilize technology and systems for the purpose of collecting, validating and verifying information, processing and maintaining information, and disclosing and providing information; to train personnel and to be able to respond to a collection of information, to search data sources, to complete and review the collection of information; and to transmit or otherwise disclose the information. All written comments will be available for public inspection on *regulations.gov*.

Atalaya Sergi,

Director, AmeriCorps Seniors.

[FR Doc. 2023–08826 Filed 4–26–23; 8:45 am]

BILLING CODE 6050–28–P

DEPARTMENT OF DEFENSE

Office of the Secretary

Board of Visitors, National Defense University; Notice of Federal Advisory Committee Meeting

AGENCY: Office of the Chairman Joint Chiefs of Staff, Department of Defense (DoD).

ACTION: Notice of Federal Advisory Committee meeting.

SUMMARY: The DoD is publishing this notice to announce that the following Federal Advisory Committee meeting of the Board of Visitors, National Defense University (BoV NDU) will take place.

DATES: Wednesday, May 24, 2023 from 9 a.m. to 3 p.m.

ADDRESSES: Normandy Hall, Joint Forces Staff College, 7800 Hampton Blvd., Naval Support Activity Hampton Roads, Norfolk, VA 23511–1702. Visitors should report to the Front Security Desk in the lobby of Normandy Hall and from there, they will be directed to the meeting room.

FOR FURTHER INFORMATION CONTACT: Dr. John W. Yaeger, (202) 664–2629 (Voice), *yaegerj@ndu.edu*; Ms. Joycelyn Stevens, (202) 685-0079 (Voice) *joycelyn.a.stevens.civ@mail.mil*; *stevensj7@ndu.edu* (Email). Mailing address is National Defense University, Fort McNair Washington, DC 20319–5066. Website: *http://www.ndu.edu/About/Board-of-Visitors/.* The most up-to-date changes to the meeting agenda can be found at *https://www.ndu.edu/About/Board-of-Visitors/BOV-May-24-2023.*

SUPPLEMENTARY INFORMATION: This meeting is being held in accordance with chapter 10 of title 5, U.S.C. (formerly known as the Federal Advisory Committee Act (FACA) (5 U.S.C., App.)) under the provisions of the Government in the Sunshine Act of 1976 (5 U.S.C. 552b, as amended), and 41 CFR 102–3.140 and 102–3.150. Pursuant to 5 U.S.C. 552b and 41 CFR 102–3.140 through 102–3.165, this meeting is open to the public.

Purpose of the Meeting: The purpose of the meeting will include discussion on accreditation compliance, organizational management, resource management, and other matters of interest to the National Defense University.

Agenda: Wednesday, May 24, 2023 from 9 a.m. to 3 p.m. (Eastern Time): Call to Order and Administrative Notes; State of the University Address; Reaffirmation of Middle States Commission on Higher Education (MSCHE) Accreditation Outcomes; Ethics and Constitutional Law in Curriculum; Budget Update; Student Demographics; Access to Mental Health Resources; Discussion of Public Written Comments; Board of Visitors Member Deliberation and Feedback; Wrap-up and Closing Remarks.

Meeting Accessibility: Limited space is available for observers and will be allocated on a first come, first served basis. Meeting location is handicap accessible. Visitors must enter Naval Support Activity Hampton Roads via Gate A from Terminal Blvd. and Meredith St.

Base Access Requirements: All visitors without a U.S. Department of Defense Common Access Card (CAC) or U.S. military ID must be vetted in advance to gain entry onto the base. Visitors must complete and sign the Department of the Navy Local Population ID Card/Base Access Pass Registration (Form SECNAV 5512/1). Please visit *https://www.cnic.navy.mil/Operations-and-Management/Base-Support/DBIDS/* and scroll to the bottom of the page to download the form. In block #24 on the form, please enter Mr. David McManaway as the Base Sponsor; his phone number is (757) 443–6621. Please fax the completed and signed Form SECNAV 5512/1 to Mr. David McManaway, JFSC Events Coordinator at (757) 443–6028. Please include a separate fax cover sheet listing your email address so Mr. McManaway can notify you if you have been cleared for base access. Please note vetting may take 14–21 working days.

Visitors who successfully complete vetting and identity proofing will be issued a DBIDS credential or paper access pass. The pass can be picked up the day prior or morning of the meeting at the Pass & ID Office at Norfolk Naval Station, 9040 Hampton Blvd., CD9, Norfolk, VA 23511. Hours of operation are 7 a.m. to 4 p.m. Monday through Friday. Please bring your ID. Additional supporting documents (including directions to Normandy Hall) are available at *http://www.ndu.edu/About/Board-of-Visitors/.* For questions or additional information, you may contact Mr. McManaway at (757) 443–6621 (Voice).

Vehicle Search: Non-DoD, Non-federally-affiliated visitors' vehicles are subject to search.

Written Statements: Pursuant to 41 CFR 102–3.105(j) and 102–3.140, and section 10(a)(3) of the Federal Advisory Committee Act of 1972, written statements to the committee may be submitted to the committee at any time or in response to a stated planned meeting agenda by email or fax to Ms. Joycelyn Stevens at *bov@ndu.edu* or Fax (202) 685–3920. Any written statements received by 5 p.m. on Tuesday, May 23 will be distributed to the BoV NDU in the order received. Comments pertaining to the agenda items will be discussed during the public meeting. Any written statements received after the deadline will be provided to the members of the BoV NDU prior to the next scheduled meeting and posted on the website.

Dated: April 24, 2023.

Aaron T. Siegel,

Alternate OSD Federal Register Liaison Officer, Department of Defense.

[FR Doc. 2023–08867 Filed 4–26–23; 8:45 am]

BILLING CODE 5001–06–P

DEPARTMENT OF DEFENSE

Office of the Secretary

[Docket ID DoD–2023–OS–0012]

Submission for OMB Review; Comment Request

AGENCY: National Defense University, Chairman of the Joint Chiefs of Staff (CJCS), Department of Defense (DoD).

ACTION: 30-Day information collection notice.

SUMMARY: The DoD has submitted to the Office of Management and Budget (OMB) for clearance the following proposal for collection of information under the provisions of the Paperwork Reduction Act.

DATES: Consideration will be given to all comments received by May 30, 2023.

ADDRESSES: Written comments and recommendations for the proposed information collection should be sent within 30 days of publication of this notice to *www.reginfo.gov/public/do/PRAMain.* Find this particular information collection by selecting ''Currently under 30-day Review—Open for Public Comments'' or by using the search function.

FOR FURTHER INFORMATION CONTACT: Angela Duncan, 571–372–7574, *whs.mc-alex.esd.mbx.dd-dod-information-collections@mail.mil.*

SUPPLEMENTARY INFORMATION:

Title; Associated Form; and OMB Number: ISMO International Fellows Personal Information Collection; OMB Control Number 0704–0601.

Type of Request: Revision.

Number of Respondents: 136.

Responses per Respondent: 2.

Annual Responses: 272.

Average Burden per Response: 45 Minutes.

Annual Burden Hours: 204.

Needs and Uses: This collection is necessary to collect essential personal information on Foreign National students attending the National Defense University. The information collected is used to create profiles for the international students that ensures their needs are met as they transition to their time living in the United States as a student. It also helps them secure driving licenses, CAC's, FIN's, TLA payments, and a DTS profile. Their preliminary information, including name, service, past assignments, etc. is collected via email correspondence while they are still in their home country. More sensitive information such as passport information, DOB, Visa # and their FIN are collected either in person or over the WhatsApp messaging

service, utilizing their end-end encryption. All student information is stored in a database that is only accessible to members of our office.

Affected Public: Individuals or households.

Frequency: On occasion.

Respondent's Obligation: Voluntary.

OMB Desk Officer: Ms. Jasmeet Seehra.

You may also submit comments and recommendations, identified by Docket ID number and title, by the following method:

• *Federal eRulemaking Portal: http://www.regulations.gov.* Follow the instructions for submitting comments.

Instructions: All submissions received must include the agency name, Docket ID number, and title for this **Federal Register** document. The general policy for comments and other submissions from members of the public is to make these submissions available for public viewing on the internet at *http://www.regulations.gov* as they are received without change, including any personal identifiers or contact information.

DOD Clearance Officer: Ms. Angela Duncan.

Requests for copies of the information collection proposal should be sent to Ms. Duncan at *whs.mc-alex.esd.mbx.dd-dod-information-collections@mail.mil.*

Dated: April 24, 2023.

Aaron T. Siegel,

Alternate OSD Federal Register Liaison Officer, Department of Defense.

[FR Doc. 2023–08865 Filed 4–26–23; 8:45 am]

BILLING CODE 5001–06–P

DEPARTMENT OF EDUCATION

[Docket No.: Docket Search Results ED–2023–SCC–0073]

Agency Information Collection Activities; Comment Request; National Professional Development Program: Grantee Performance Report

AGENCY: Office of English Language Acquisition (OELA), Department of Education (ED).

ACTION: Notice.

SUMMARY: In accordance with the Paperwork Reduction Act (PRA) of 1995, the Department is proposing an extension without change of a currently approved information collection request (ICR).

DATES: Interested persons are invited to submit comments on or before June 26, 2023.

ADDRESSES: To access and review all the documents related to the information collection listed in this notice, please use *http://www.regulations.gov* by searching the Docket ID number ED–2023–SCC–0073. Comments submitted in response to this notice should be submitted electronically through the Federal eRulemaking Portal at *http://www.regulations.gov* by selecting the Docket ID number or via postal mail, commercial delivery, or hand delivery. If the *regulations.gov* site is not available to the public for any reason, the Department will temporarily accept comments at *ICDocketMgr@ed.gov.* Please include the docket ID number and the title of the information collection request when requesting documents or submitting comments. Please note that comments submitted after the comment period will not be accepted. Written requests for information or comments submitted by postal mail or delivery should be addressed to the Manager of the Strategic Collections and Clearance Governance and Strategy Division, U.S. Department of Education, 400 Maryland Ave. SW, LBJ, Room 6W203, Washington, DC 20202–8240.

FOR FURTHER INFORMATION CONTACT: For specific questions related to collection activities, please contact Melissa Escalante, (202) 987–1745.

SUPPLEMENTARY INFORMATION: The Department, in accordance with the Paperwork Reduction Act of 1995 (PRA) (44 U.S.C. 3506(c)(2)(A)), provides the general public and Federal agencies with an opportunity to comment on proposed, revised, and continuing collections of information. This helps the Department assess the impact of its information collection requirements and minimize the public's reporting burden. It also helps the public understand the Department's information collection requirements and provide the requested data in the desired format. The Department is soliciting comments on the proposed information collection request (ICR) that is described below. The Department is especially interested in public comment addressing the following issues: (1) is this collection necessary to the proper functions of the Department; (2) will this information be processed and used in a timely manner; (3) is the estimate of burden accurate; (4) how might the Department enhance the quality, utility, and clarity of the information to be collected; and (5) how might the Department minimize the burden of this collection on the respondents, including through the use of information technology. Please note that written comments received in response to this notice will be considered public records.

Title of Collection: National Professional Development Program: Grantee Performance Report.

OMB Control Number: 1885–0555.

Type of Review: Extension without change of a currently approved ICR.

Respondents/Affected Public: State, local, and Tribal governments.

Total Estimated Number of Annual Responses: 138.

Total Estimated Number of Annual Burden Hours: 6,900.

Abstract: Information is collected in compliance with the authorized by section 3131(c)(1)(C) of the Elementary and Secondary Education Act of 1965 as amended by the Every Student Succeeds Act, and in accordance with the Education Department General Administrative Regulations (EDGAR), 34 CFR 75.253. EDGAR states that recipients of multi-year discretionary grants must submit an Annual Performance Report (APR) demonstrating that substantial progress has been made towards meeting the approved objectives of the project. In addition, discretionary grantees are required to report on their progress toward meeting the performance measures established for the U.S. Department of Education (ED) grant program.

Dated: April 24, 2023.

Kun Mullan,

PRA Coordinator, Strategic Collections and Clearance, Governance and Strategy Division, Office of Chief Data Officer, Office of Planning, Evaluation and Policy Development.

[FR Doc. 2023–08875 Filed 4–26–23; 8:45 am]

BILLING CODE 4000–01–P

DEPARTMENT OF ENERGY

Environmental Management Advisory Board

AGENCY: Office of Environmental Management, Department of Energy.

ACTION: Notice of open meeting.

SUMMARY: This notice announces a virtual meeting of the Environmental Management Advisory Board (EMAB). The Federal Advisory Committee Act requires that public notice of this meeting be announced in the **Federal Register**.

DATES: Monday, May 22, 2023; 3:00 p.m.–5:00 p.m. EDT

ADDRESSES: This virtual meeting will be open to the public (observation only). To attend, please contact Alyssa Petit by email, *Alyssa.Petit@em.doe.gov,* no later than 5:00 p.m. EDT on Thursday, May 18, 2023.

FOR FURTHER INFORMATION CONTACT: Alyssa Petit, EMAB Federal Coordinator. U.S. Department of Energy, 1000 Independence Avenue SW, Washington, DC 20585. Phone (202) 430–9624 or Email: *Alyssa.Petit@em.doe.gov.*

SUPPLEMENTARY INFORMATION:

Purpose of the Board: The purpose of EMAB is to provide the Assistant Secretary for Environmental Management (EM) with independent advice and recommendations on corporate issues confronting the EM program. EMAB's membership reflects a diversity of views, demographics, expertise, and professional and academic experience. Individuals are appointed by the Secretary of Energy to serve as either special Government employees or representatives of specific interests and/or entities.

Tentative Agenda

- Public Comment
- EMAB Tank Waste Roadmap Recommendation and Vote
- Board Business

Public Participation: The online virtual meeting is open to the public. The Designated Federal Officer is empowered to conduct the conference call in a fashion that will facilitate the orderly conduct of business. Individuals wishing to make public comments should email them as directed above. If you require special accommodations due to a disability, please contact Alyssa Petit at least seven days in advance of the meeting at the email address listed above.

Public Comment: Public comments will be accepted via email prior to and after the meeting. Comments received no later than 5:00 p.m. EDT on Thursday, May 18, 2023, will be read aloud during the virtual meeting. Comments will also be accepted after the meeting by no later than 5:00 p.m. EDT on Monday, May 29, 2023. Please send comments to *Alyssa.Petit@em.doe.gov.*

Minutes: Minutes will be available by writing or calling Alyssa Petit at the address or phone number listed above. Minutes will also be available at the following website: *https://www.energy.gov/em/listings/emab-meetings.*

Signed in Washington, DC, on April 21, 2023.

LaTanya Butler,

Deputy Committee Management Officer.

[FR Doc. 2023–08861 Filed 4–26–23; 8:45 am]

BILLING CODE 6450–01–P

DEPARTMENT OF ENERGY

National Quantum Initiative Advisory Committee

AGENCY: Office of Science, Department of Energy.

ACTION: Notice of open meeting.

SUMMARY: This notice announces an open virtual meeting of the National Quantum Initiative Advisory Committee (NQIAC). The Federal Advisory Committee Act requires that public notice of these meetings be announced in the **Federal Register**.

DATES: Friday, May 19, 2023; 1:00 p.m. to 4:00 p.m. EST.

ADDRESSES: Virtual Meeting: Instructions to participate remotely will be posted on the National Quantum Initiative Advisory Committee website at: *www.quantum.gov/about/nqiac* prior to the meeting and can also be obtained by contacting Thomas Wong, (240) 220–4668, or email: *NQIAC@quantum.gov*.

FOR FURTHER INFORMATION CONTACT: Thomas Wong, Designated Federal Officer, NQIAC, (240) 220–4668 or *NQIAC@quantum.gov*.

SUPPLEMENTARY INFORMATION:

Purpose of the Committee: The NQIAC has been established to advise the President, the National Science and Technology Council (NSTC) Subcommittee on Quantum Information Science (SCQIS), and the NSTC Subcommittee on Economic and Security Implications of Quantum Science (ESIX) on the National Initiative Act (NQI) Program, and on trends and developments in quantum information science and technology, in accordance with the National Quantum Initiative Act (*Pub. L. 115–368*) and *Executive Order 14073*.

Tentative Agenda:

- Deliberate and Approve Report on Reauthorizing the National Quantum Initiative.

Public Participation: The meeting is open to the public. It is the policy of the NQIAC to accept written public comments no longer than 5 pages and to accommodate oral public comments, whenever possible. The NQIAC expects that public statements presented at its meetings will not be repetitive of previously submitted oral or written statements. The public comment period for this meeting will take place on May 19, 2023, at a time specified in the meeting agenda. This public comment period is designed only for substantive commentary on NQIAC's work, not for business marketing purposes. The Chairperson of the Committee will conduct the meeting to facilitate the orderly conduct of business.

Oral Comments: To be considered for the public speaker list at the meeting, interested parties should register to speak at *NQIAC@quantum.gov,* no later than 12:00 p.m. Eastern Time on May 12, 2023. To accommodate as many speakers as possible, the time for public comments will be limited to three (3) minutes per person, with a total public comment period of up to 15 minutes. If more speakers register than there is space available on the agenda, NQIAC will select speakers on a first-come, first-served basis from those who applied. Those not able to present oral comments may always file written comments with the committee.

Written Comments: Although written comments are accepted continuously, written comments relevant to the subjects of the meeting should be submitted to *NQIAC@quantum.gov* no later than 12:00 p.m. Eastern Time on May 12, 2023, so that the comments may be made available to the NQIAC members prior to this meeting for their consideration. Please note that because NQIAC operates under the provisions of FACA, all public comments and related materials will be treated as public documents and will be made available for public inspection, including being posted on the NQIAC website.

Minutes: The minutes of this meeting will be available on the National Quantum Initiative Advisory Committee website at: *https://www.quantum.gov/about/nqiac/*.

Signed in Washington, DC, on April 21, 2023.

LaTanya Butler,

Deputy Committee Management Officer.

[FR Doc. 2023–08862 Filed 4–26–23; 8:45 am]

BILLING CODE 6450–01–P

DEPARTMENT OF ENERGY

Federal Energy Regulatory Commission

[Docket No. CP23–161–000]

Southern Star Central Gas Pipeline, Inc.; Notice of Request Under Blanket Authorization and Establishing Intervention and Protest Deadline

Take notice that on April 17, 2023, Southern Star Central Gas Pipeline, Inc. (Southern Star) filed a prior notice request for authorization, in accordance with Sections 157.205, 157.208.157.211 and 157.216 of the Federal Energy Regulatory Commission's (Commission) regulations under the Natural Gas Act and Southern Star's blanket certificate issued in Docket No. CP82–479–000 to implement its Line ESA Replacement

Project. Specifically, Southern Star proposes to install approximately 6.62 miles of new 16-inch pipe, which will be designated as Line EVA, to replace approximately 4.75 miles of 16-inch pipe comprising the entirety of Line ESA and a 2.82-mile portion of 4-inch Line EV, both of which will subsequently be abandoned in place, in Douglas and Leavenworth Counties, Kansas. Additionally, a meter setting will be replaced at the Kansas Power and Light Co. Lawrence Plant, all as more fully set forth in the application which is on file with the Commission and open for public inspection.

In addition to publishing the full text of this document in the **Federal Register**, the Commission provides all interested persons an opportunity to view and/or print the contents of this document via the internet through the Commission's Home Page (*http://ferc.gov*) using the ''eLibrary'' link. Enter the docket number excluding the last three digits in the docket number field to access the document. At this time, the Commission has suspended access to the Commission's Public Reference Room, due to the proclamation declaring a National Emergency concerning the Novel Coronavirus Disease (COVID–19), issued by the President on March 13, 2020. For assistance, contact the Federal Energy Regulatory Commission at *FERCOnlineSupport@ferc.gov* or call toll-free, (886) 208–3676 or TYY, (202) 502–8659.

Any questions concerning this application should be directed to Cindy C. Thompson, Director, Regulatory, Compliance, and Information Governance, 4700 State Route 56, Owensboro, Kentucky 42301 at (270) 852–4655; or email at *Cindy.Thompson@southernstar.com*.

Pursuant to Section 157.9 of the Commission's Rules of Practice and Procedure,[1] within 90 days of this Notice the Commission staff will either: complete its environmental review and place it into the Commission's public record (eLibrary) for this proceeding; or issue a Notice of Schedule for Environmental Review. If a Notice of Schedule for Environmental Review is issued, it will indicate, among other milestones, the anticipated date for the Commission staff's issuance of the final environmental impact statement (FEIS) or environmental assessment (EA) for this proposal. The filing of an EA in the Commission's public record for this proceeding or the issuance of a Notice of Schedule for Environmental Review will serve to notify federal and state agencies of the timing for the completion of all necessary reviews, and the subsequent need to complete all federal authorizations within 90 days of the date of issuance of the Commission staff's FEIS or EA.

Public Participation

There are three ways to become involved in the Commission's review of this project: you can file a protest to the project, you can file a motion to intervene in the proceeding, and you can file comments on the project. There is no fee or cost for filing protests, motions to intervene, or comments. The deadline for filing protests, motions to intervene, and comments is 5:00 p.m. Eastern Time on June 20, 2023. How to file protests, motions to intervene, and comments is explained below.

Protests

Pursuant to section 157.205 of the Commission's regulations under the NGA,[2] any person [3] or the Commission's staff may file a protest to the request. If no protest is filed within the time allowed or if a protest is filed and then withdrawn within 30 days after the allowed time for filing a protest, the proposed activity shall be deemed to be authorized effective the day after the time allowed for protest. If a protest is filed and not withdrawn within 30 days after the time allowed for filing a protest, the instant request for authorization will be considered by the Commission.

Protests must comply with the requirements specified in section 157.205(e) of the Commission's regulations,[4] and must be submitted by the protest deadline, which is June 20, 2023. A protest may also serve as a motion to intervene so long as the protestor states it also seeks to be an intervenor.

Interventions

Any person has the option to file a motion to intervene in this proceeding. Only intervenors have the right to request rehearing of Commission orders issued in this proceeding and to subsequently challenge the Commission's orders in the U.S. Circuit Courts of Appeal.

To intervene, you must submit a motion to intervene to the Commission in accordance with Rule 214 of the Commission's Rules of Practice and Procedure [5] and the regulations under the NGA [6] by the intervention deadline for the project, which is June 20, 2023. As described further in Rule 214, your motion to intervene must state, to the extent known, your position regarding the proceeding, as well as your interest in the proceeding. For an individual, this could include your status as a landowner, ratepayer, resident of an impacted community, or recreationist. You do not need to have property directly impacted by the project in order to intervene. For more information about motions to intervene, refer to the FERC website at *https://www.ferc.gov/how-guides*.

All timely, unopposed motions to intervene are automatically granted by operation of Rule 214(c)(1). Motions to intervene that are filed after the intervention deadline are untimely and may be denied. Any late-filed motion to intervene must show good cause for being late and must explain why the time limitation should be waived and provide justification by reference to factors set forth in Rule 214(d) of the Commission's Rules and Regulations. A person obtaining party status will be placed on the service list maintained by the Secretary of the Commission and will receive copies (paper or electronic) of all documents filed by the applicant and by all other parties.

Comments

Any person wishing to comment on the project may do so. The Commission considers all comments received about the project in determining the appropriate action to be taken. To ensure that your comments are timely and properly recorded, please submit your comments on or before June 20, 2023. The filing of a comment alone will not serve to make the filer a party to the proceeding. To become a party, you must intervene in the proceeding.

How To File Protests, Interventions, and Comments

There are two ways to submit protests, motions to intervene, and comments. In both instances, please reference the Project docket number CP23–161–000 in your submission.

(1) You may file your protest, motion to intervene, and comments by using the Commission's eFiling feature, which is located on the Commission's website (*www.ferc.gov*) under the link to Documents and Filings. New eFiling users must first create an account by clicking on ''eRegister.'' You will be asked to select the type of filing you are making; first select ''General'' and then

[1] 18 CFR (Code of Federal Regulations) § 157.9.

[2] 18 CFR 157.205.

[3] Persons include individuals, organizations, businesses, municipalities, and other entities. 18 CFR 385.102(d).

[4] 18 CFR 157.205(e).

[5] 18 CFR 385.214.

[6] 18 CFR 157.10.

select ''Protest'', ''Intervention'', or ''Comment on a Filing''; or [7]

(2) You can file a paper copy of your submission by mailing it to the address below. Your submission must reference the Project docket number CP23–161–000.

To mail via USPS, use the following address: Kimberly D. Bose, Secretary, Federal Energy Regulatory Commission, 888 First Street NE, Washington, DC 20426.

To send via any other courier, use the following address: Kimberly D. Bose, Secretary, Federal Energy Regulatory Commission, 12225 Wilkins Avenue, Rockville, Maryland 20852.

The Commission encourages electronic filing of submissions (option 1 above) and has eFiling staff available to assist you at (202) 502–8258 or *FERCOnlineSupport@ferc.gov*.

Protests and motions to intervene must be served to the applicant by mail to:

Cindy C. Thompson, Director, Regulatory, Compliance, and Information Governance, 4700 State Route 56, Owensboro, Kentucky 42301 or by email (with a link to the document) at *Cindy.Thompson@southernstar.com*. Any subsequent submissions by an intervenor must be served on the applicant and all other parties to the proceeding. Contact information for parties can be downloaded from the service list at the eService link on FERC Online.

Tracking the Proceeding

Throughout the proceeding, additional information about the project will be available from the Commission's Office of External Affairs, at (866) 208–FERC, or on the FERC website at *www.ferc.gov* using the ''eLibrary'' link as described above. The eLibrary link also provides access to the texts of all formal documents issued by the Commission, such as orders, notices, and rulemakings.

In addition, the Commission offers a free service called eSubscription which allows you to keep track of all formal issuances and submittals in specific dockets. This can reduce the amount of time you spend researching proceedings by automatically providing you with notification of these filings, document summaries, and direct links to the documents. For more information and to register, go to *https://www.ferc.gov/ferc-online/overview*.

Dated: April 21, 2023.

Debbie-Anne A. Reese,

Deputy Secretary.

[FR Doc. 2023–08919 Filed 4–26–23; 8:45 am]

BILLING CODE 6717–01–P

[7] Additionally, you may file your comments electronically by using the eComment feature, which is located on the Commission's website at *www.ferc.gov* under the link to Documents and Filings. Using eComment is an easy method for interested persons to submit brief, text-only comments on a project.

DEPARTMENT OF ENERGY

Federal Energy Regulatory Commission

[Docket No. IC23–11–000]

Commission Information Collection Activities (FERC–510); Comment Request; Extension

AGENCY: Federal Energy Regulatory Commission, DOE.

ACTION: Notice of information collection and request for comments.

SUMMARY: In compliance with the requirements of the Paperwork Reduction Act of 1995, the Federal Energy Regulatory Commission (Commission or FERC) is soliciting public comment on the proposed extension of currently approved information collection, FERC–510 (Application for Surrender of a Hydropower License).

DATES: Comments on the collection of information are due June 26, 2023.

ADDRESSES: You may submit comments (identified by Docket No. IC23–11–000) by one of the following methods:

- *Electronic Filing (preferred):* Documents must be filed in acceptable native applications and print-to-PDF, but not in scanned or picture format.
- For those unable to file electronically, comments may be filed by USPS mail or by hand (including courier) delivery.
  - *Mail via U.S. Postal Service:* Federal Energy Regulatory Commission, Secretary of the Commission, 888 First Street NE, Washington, DC 20426.
  - *Mail via any other service:* Federal Energy Regulatory Commission, Secretary of the Commission, 12225 Wilkins Avenue, Rockville, MD 20852.

Instructions: All submissions must be formatted and filed in accordance with submission guidelines at: *https://www.ferc.gov/help/submission-guide.asp.* For user assistance, contact FERC Online Support by email at *ferconlinesupport@ferc.gov,* or by phone at: (866) 208–3676 (toll-free), or (202) 502–8659 for TTY.

Docket: Users interested in receiving automatic notification of activity in this docket or in viewing/downloading comments and issuances in this docket may do so at *https://www.ferc.gov/docs-filing/docs-filing.asp.*

FOR FURTHER INFORMATION CONTACT: Ellen Brown may be reached by email at *DataClearance@FERC.gov,* telephone at (202) 502–8663.

SUPPLEMENTARY INFORMATION:

Title: FERC–510, Application for Surrender of a Hydropower License.

OMB Control No.: 1902–0068.

Type of Request: Three-year extension of the FERC–510 information collection requirements with no changes to the current reporting and recordkeeping requirements.

Abstract: The purpose of FERC–510 is to implement information collections pursuant to sections 4(e), 6, and 13 of the Federal Power Act (FPA) (16 U.S.C. 797(e), 799 and 806). Section 4(e) gives the Commission authority to issue licenses for the purposes of constructing, operating and maintaining dams, water conduits, reservoirs, powerhouses, transmission lines or other power project works necessary or convenient for developing and improving navigation, transmission and utilization of power using bodies of water over which Congress has jurisdiction. Section 6 gives the Commission the authority to prescribe the conditions of licenses including the revocation or surrender of the license. Section 13 defines the Commission's authority to delegate time periods for when a license must be terminated if project construction has not begun. Surrender of a license may be desired by a licensee when a licensed project is retired or not constructed or natural catastrophes have damaged or destroyed the project facilities.

FERC–510 is the application for the surrender of a hydropower license.[1] The information is used by Commission staff to determine the broad impact of such surrender. The Commission will issue a notice soliciting comments from the public and other agencies and conduct a review of the application before issuing an order for Surrender of a License. The order is the result of an analysis of the information produced (*i.e.,* dam safety, public safety, and environmental concerns, etc.), which is examined to determine whether any conditions must be satisfied before granting the surrender. The order implements the existing regulations and is inclusive for surrender of all types of hydropower licenses issued by FERC and its predecessor, the Federal Power Commission.

Type of Respondent: Private or Municipal Hydropower Licensees.

[1] 18 CFR 6.1–6.4

Estimate of Annual Burden:[2] The Commission estimates the total annual burden and cost[3] for this information collection as follows:

FERC–510

Number of respondents (1)	Annual number of responses per respondent (2)	Total number of responses (1)*(2)=(3)	Average burden hrs. & cost ($) per response (4)	Total annual burden hrs. & total annual cost ($)(3)*(4)=(5)	Cost per respondent ($)(5)÷(1)
7	1	7	80 hrs.; $7,280	560 hrs.; $50,960	$7,280

Comments: Comments are invited on: (1) whether the collection of information is necessary for the proper performance of the functions of the Commission, including whether the information will have practical utility; (2) the accuracy of the agency's estimate of the burden and cost of the collection of information, including the validity of the methodology and assumptions used; (3) ways to enhance the quality, utility, and clarity of the information collection; and (4) ways to minimize the burden of the collection of information on those who are to respond, including the use of automated collection techniques or other forms of information technology.

Dated: April 21, 2023.

Debbie-Anne A. Reese,

Deputy Secretary.

[FR Doc. 2023–08917 Filed 4–26–23; 8:45 am]

BILLING CODE 6717–01–P

DEPARTMENT OF ENERGY

Federal Energy Regulatory Commission

[Docket No. ER23–1669–000]

Raceway Solar 1, LLC; Supplemental Notice That Initial Market-Based Rate Filing Includes Request for Blanket Section 204 Authorization

This is a supplemental notice in the above-referenced proceeding of Raceway Solar 1, LLC's application for market-based rate authority, with an accompanying rate tariff, noting that such application includes a request for blanket authorization, under 18 CFR part 34, of future issuances of securities and assumptions of liability.

Any person desiring to intervene or to protest should file with the Federal Energy Regulatory Commission, 888 First Street NE, Washington, DC 20426, in accordance with Rules 211 and 214 of the Commission's Rules of Practice and Procedure (18 CFR 385.211 and 385.214). Anyone filing a motion to intervene or protest must serve a copy of that document on the Applicant.

Notice is hereby given that the deadline for filing protests with regard to the applicant's request for blanket authorization, under 18 CFR part 34, of future issuances of securities and assumptions of liability, is May 11, 2023.

The Commission encourages electronic submission of protests and interventions in lieu of paper, using the FERC Online links at *http://www.ferc.gov*. To facilitate electronic service, persons with internet access who will eFile a document and/or be listed as a contact for an intervenor must create and validate an eRegistration account using the eRegistration link. Select the eFiling link to log on and submit the intervention or protests.

Persons unable to file electronically may mail similar pleadings to the Federal Energy Regulatory Commission, 888 First Street NE, Washington, DC 20426. Hand delivered submissions in docketed proceedings should be delivered to Health and Human Services, 12225 Wilkins Avenue, Rockville, Maryland 20852.

In addition to publishing the full text of this document in the **Federal Register**, the Commission provides all interested persons an opportunity to view and/or print the contents of this document via the internet through the Commission's Home Page (*http://www.ferc.gov*) using the ''eLibrary'' link. Enter the docket number excluding the last three digits in the docket number field to access the document. At this time, the Commission has suspended access to the Commission's Public Reference Room, due to the proclamation declaring a National Emergency concerning the Novel Coronavirus Disease (COVID–19), issued by the President on March 13, 2020. For assistance, contact the Federal Energy Regulatory Commission at *FERCOnlineSupport@ferc.gov* or call toll-free, (886) 208–3676 or TYY, (202) 502–8659.

Dated: April 21, 2023.

Debbie-Anne A. Reese,

Deputy Secretary.

[FR Doc. 2023–08922 Filed 4–26–23; 8:45 am]

BILLING CODE 6717–01–P

DEPARTMENT OF ENERGY

Federal Energy Regulatory Commission

[Project No. 2445–028]

Green Mountain Power Corporation; Notice of Waiver Period for

Water Quality Certification Application

On April 12, 2023, Green Mountain Power Corporation submitted to the Federal Energy Regulatory Commission (Commission) a copy of its application for a Clean Water Act section 401(a)(1) water quality certification filed with the Vermont Department of Environmental Conservation (Vermont DEC), in conjunction with the above captioned project. Pursuant to 40 CFR 121.6 and section 4.34(b)(5) of the Commission's regulations,[1] we hereby notify the Vermont DEC of the following:

Date of Receipt of the Certification Request: April 12, 2023.

Reasonable Period of Time To Act on the Certification Request: One year, April 12, 2024.

If Vermont DEC fails or refuses to act on the water quality certification request on or before the above date, then the agency certifying authority is deemed waived pursuant to section 401(a)(1) of

[2] ''Burden'' is the total time, effort, or financial resources expended by persons to generate, maintain, retain, or disclose or provide information to or for a Federal agency. For additional information, refer to Title 5 Code of Federal Regulations 1320.3. The number of respondents is based on the average number of respondents over the last three years.

[3] The Commission staff thinks that the average respondent for this collection is similarly situated to the Commission, in terms of salary plus benefits. The FERC 2022 average salary plus benefits for one FERC full-time equivalent (FTE) is $188,922/year (or $91.00/hour).

[1] 18 CFR 4.34(b)(5).

the Clean Water Act, 33 U.S.C. 1341(a)(1).

Dated: April 21, 2023.

Debbie-Anne A. Reese,

Deputy Secretary.

[FR Doc. 2023–08920 Filed 4–26–23; 8:45 am]

BILLING CODE 6717–01–P

DEPARTMENT OF ENERGY

Federal Energy Regulatory Commission

[Docket No. NJ23–9–000]

City of Vernon, California; Notice of Filing

Take notice that on April 12, 2023, City of Vernon, California submits tariff filing: 2022 Transmission Revenue Requirement and Transmission Revenue Balancing Account Adjustment, to be effective January 1, 2022.

Any person desiring to intervene or to protest this filing must file in accordance with Rules 211 and 214 of the Commission's Rules of Practice and Procedure (18 CFR 385.211, 385.214). Protests will be considered by the Commission in determining the appropriate action to be taken but will not serve to make protestants parties to the proceeding. Any person wishing to become a party must file a notice of intervention or motion to intervene, as appropriate. Such notices, motions, or protests must be filed on or before the comment date. On or before the comment date, it is not necessary to serve motions to intervene or protests on persons other than the Applicant.

In addition to publishing the full text of this document in the **Federal Register**, the Commission provides all interested persons an opportunity to view and/or print the contents of this document via the internet through the Commission's Home Page (*http://www.ferc.gov*) using the ''eLibrary'' link. Enter the docket number excluding the last three digits in the docket number field to access the document. At this time, the Commission has suspended access to the Commission's Public Reference Room, due to the proclamation declaring a National Emergency concerning the Novel Coronavirus Disease (COVID–19), issued by the President on March 13, 2020. For assistance, contact the Federal Energy Regulatory Commission at *FERCOnlineSupport@ferc.gov* or call toll-free, (886) 208–3676 or TYY, (202) 502–8659.

The Commission strongly encourages electronic filings of comments, protests and interventions in lieu of paper using the ''eFiling'' link at *http://www.ferc.gov.* Persons unable to file electronically may mail similar pleadings to the Federal Energy Regulatory Commission, 888 First Street NE, Washington, DC 20426. Hand delivered submissions in docketed proceedings should be delivered to Health and Human Services, 12225 Wilkins Avenue, Rockville, Maryland 20852.

Comment Date: 5:00 p.m. Eastern Time on May 3, 2023.

Dated: April 21, 2023.

Debbie-Anne A. Reese,

Deputy Secretary.

[FR Doc. 2023–08923 Filed 4–26–23; 8:45 am]

BILLING CODE 6717–01–P

DEPARTMENT OF ENERGY

Federal Energy Regulatory Commission

[Docket No. ER23–1668–000]

Estrella Solar, LLC; Supplemental Notice That Initial Market-Based Rate Filing Includes Request for Blanket Section 204 Authorization

This is a supplemental notice in the above-referenced proceeding of Estrella Solar, LLC's application for market-based rate authority, with an accompanying rate tariff, noting that such application includes a request for blanket authorization, under 18 CFR part 34, of future issuances of securities and assumptions of liability.

Any person desiring to intervene or to protest should file with the Federal Energy Regulatory Commission, 888 First Street NE, Washington, DC 20426, in accordance with Rules 211 and 214 of the Commission's Rules of Practice and Procedure (18 CFR 385.211 and 385.214). Anyone filing a motion to intervene or protest must serve a copy of that document on the Applicant.

Notice is hereby given that the deadline for filing protests with regard to the applicant's request for blanket authorization, under 18 CFR part 34, of future issuances of securities and assumptions of liability, is May 11, 2023.

The Commission encourages electronic submission of protests and interventions in lieu of paper, using the FERC Online links at *http://www.ferc.gov.* To facilitate electronic service, persons with internet access who will eFile a document and/or be listed as a contact for an intervenor must create and validate an eRegistration account using the eRegistration link. Select the eFiling link to log on and submit the intervention or protests.

Persons unable to file electronically may mail similar pleadings to the Federal Energy Regulatory Commission, 888 First Street NE, Washington, DC 20426. Hand delivered submissions in docketed proceedings should be delivered to Health and Human Services, 12225 Wilkins Avenue, Rockville, Maryland 20852.

In addition to publishing the full text of this document in the **Federal Register**, the Commission provides all interested persons an opportunity to view and/or print the contents of this document via the internet through the Commission's Home Page (*http://www.ferc.gov*) using the ''eLibrary'' link. Enter the docket number excluding the last three digits in the docket number field to access the document. At this time, the Commission has suspended access to the Commission's Public Reference Room, due to the proclamation declaring a National Emergency concerning the Novel Coronavirus Disease (COVID–19), issued by the President on March 13, 2020. For assistance, contact the Federal Energy Regulatory Commission at *FERCOnlineSupport@ferc.gov* or call toll-free, (886) 208–3676 or TYY, (202) 502–8659.

Dated: April 21, 2023.

Debbie-Anne A. Reese,

Deputy Secretary.

[FR Doc. 2023–08927 Filed 4–26–23; 8:45 am]

BILLING CODE 6717–01–P

DEPARTMENT OF ENERGY

Federal Energy Regulatory Commission

Combined Notice of Filings #1

Take notice that the Commission received the following exempt wholesale generator filings:

Docket Numbers: EG23–127–000.

Applicants: Roundhouse Renewable Energy II, LLC.

Description: Roundhouse Renewable Energy II, LLC submits Notice of Self-Certification of Exempt Wholesale Generator Status.

Filed Date: 4/17/23.

Accession Number: 20230417–5272.

Comment Date: 5 p.m. ET 5/8/23.

Docket Numbers: EG23–128–000.

Applicants: Bronco Plains Wind II, LLC.

Description: Bronco Plains Wind II, LLC submits Notice of Self-Certification of Exempt Wholesale Generator Status.

Filed Date: 4/20/23.

Accession Number: 20230420–5206.

Comment Date: 5 p.m. ET 5/11/23.

Docket Numbers: EG23–129–000.
Applicants: Estrella Solar, LLC.
Description: Estrella Solar, LLC submits Notice of Self–Certification of Exempt Wholesale Generator Status.
Filed Date: 4/21/23.
Accession Number: 20230421–5063.
Comment Date: 5 p.m. ET 5/12/23.

Docket Numbers: EG23–130–000.
Applicants: Raceway Solar 1, LLC.
Description: Raceway Solar 1, LLC submits Notice of Self–Certification of Exempt Wholesale Generator Status.
Filed Date: 4/21/23.
Accession Number: 20230421–5068.
Comment Date: 5 p.m. ET 5/12/23.

Take notice that the Commission received the following Complaints and Compliance filings in EL Dockets:

Docket Numbers: EL23–61–000.
Applicants: Old Dominion Electric Cooperative v. PJM Interconnection, L.L.C.
Description: Complaint of Old Dominion Electric Cooperative v. PJM Interconnection, L.L.C.
Filed Date: 4/14/23.
Accession Number: 20230414–5287.
Comment Date: 5 p.m. ET 5/15/23.

Take notice that the Commission received the following electric rate filings:

Docket Numbers: ER20–1734–004.
Applicants: Alabama Power Company.
Description: Compliance filing: Order No. 864 OATT Supplemental Further Compliance Filing to be effective 1/27/2020.
Filed Date: 4/21/23.
Accession Number: 20230421–5141.
Comment Date: 5 p.m. ET 5/12/23.

Docket Numbers: ER23–495–003.
Applicants: AES CE Solutions, LLC.
Description: Tariff Amendment: AES CE Solutions, LLC MBR Tariff to be effective 11/24/2022.
Filed Date: 4/21/23.
Accession Number: 20230421–5067.
Comment Date: 5 p.m. ET 5/12/23.

Docket Numbers: ER23–1175–001.
Applicants: Dominion Energy South Carolina, Inc.
Description: Tariff Amendment: Jasper Prov LGIA Notice of Cancellation Amendment to be effective 2/13/2023.
Filed Date: 4/21/23.
Accession Number: 20230421–5016.
Comment Date: 5 p.m. ET 5/12/23.

Docket Numbers: ER23–1335–000.
Applicants: Ameren Illinois Company.
Description: Formal Challenge of Cooperative Customers to March 14, 2023 Annual Informational Filing by Ameren Illinois Company.
Filed Date: 4/19/23.
Accession Number: 20230419–5272.
Comment Date: 5 p.m. ET 5/19/23.

Docket Numbers: ER23–1674–000.
Applicants: Northern Iowa Windpower LLC.
Description: Tariff Amendment: Notice of Cancellation of MBR Tariff, and Request for Waiver of Prior Notice to be effective 4/21/2023.
Filed Date: 4/20/23.
Accession Number: 20230420–5207.
Comment Date: 5 p.m. ET 5/11/23.

Docket Numbers: ER23–1675–000.
Applicants: Coachella Hills Wind, LLC.
Description: § 205(d) Rate Filing: Revised Market-Based Rate Tariff to be effective 4/22/2023.
Filed Date: 4/21/23.
Accession Number: 20230421–5115.
Comment Date: 5 p.m. ET 5/12/23.

Docket Numbers: ER23–1676–000.
Applicants: Coachella Wind Holdings, LLC.
Description: § 205(d) Rate Filing: Revised Market-Based Rate Tariff to be effective 4/22/2023.
Filed Date: 4/21/23.
Accession Number: 20230421–5120.
Comment Date: 5 p.m. ET 5/12/23.

Docket Numbers: ER23–1677–000.
Applicants: EdSan 1B Group 3, LLC.
Description: § 205(d) Rate Filing: Revised Market-Based Rate Tariff to be effective 4/22/2023.
Filed Date: 4/21/23.
Accession Number: 20230421–5128.
Comment Date: 5 p.m. ET 5/12/23.

Docket Numbers: ER23–1678–000.
Applicants: Edwards Sanborn Storage I, LLC.
Description: § 205(d) Rate Filing: Revised Market-Based Rate Tariff to be effective 4/22/2023.
Filed Date: 4/21/23.
Accession Number: 20230421–5145.
Comment Date: 5 p.m. ET 5/12/23.

Docket Numbers: ER23–1679–000.
Applicants: Edwards Sanborn Storage II, LLC.
Description: § 205(d) Rate Filing: Revised Market-Based Rate Tariff to be effective 4/22/2023.
Filed Date: 4/21/23.
Accession Number: 20230421–5151.
Comment Date: 5 p.m. ET 5/12/23.

Docket Numbers: ER23–1680–000.
Applicants: Lockhart ESS, LLC.
Description: § 205(d) Rate Filing: Revised Market-Based Rate Tariff to be effective 4/22/2023.
Filed Date: 4/21/23.
Accession Number: 20230421–5152.
Comment Date: 5 p.m. ET 5/12/23.

Docket Numbers: ER23–1681–000.
Applicants: Lockhart Solar PV II, LLC.
Description: § 205(d) Rate Filing: Revised Market-Based Tariff to be effective 4/22/2023.
Filed Date: 4/21/23.
Accession Number: 20230421–5156.
Comment Date: 5 p.m. ET 5/12/23.

Docket Numbers: ER23–1682–000.
Applicants: Lockhart Solar PV, LLC.
Description: § 205(d) Rate Filing: Revised Market-Based Rate Tariff to be effective 4/22/2023.
Filed Date: 4/21/23.
Accession Number: 20230421–5159.
Comment Date: 5 p.m. ET 5/12/23.

Docket Numbers: ER23–1683–000.
Applicants: Oasis Alta, LLC.
Description: § 205(d) Rate Filing: Revised Market-Based Rate Tariff to be effective 4/22/2023.
Filed Date: 4/21/23.
Accession Number: 20230421–5164.
Comment Date: 5 p.m. ET 5/12/23.

Docket Numbers: ER23–1684–000.
Applicants: Painted Hills Wind Holdings, LLC.
Description: § 205(d) Rate Filing: Revised Market-Based Rate Tariff to be effective 4/22/2023.
Filed Date: 4/21/23.
Accession Number: 20230421–5174.
Comment Date: 5 p.m. ET 5/12/23.

Docket Numbers: ER23–1685–000.
Applicants: Sagebrush ESS, LLC.
Description: § 205(d) Rate Filing: Revised Market-Based Rate Tariff to be effective 4/22/2023.
Filed Date: 4/21/23.
Accession Number: 20230421–5177.
Comment Date: 5 p.m. ET 5/12/23.

Docket Numbers: ER23–1686–000.
Applicants: Sagebrush Line, LLC.
Description: § 205(d) Rate Filing: Revised Market-Based Rate Tariff to be effective 4/22/2023.
Filed Date: 4/21/23.
Accession Number: 20230421–5184.
Comment Date: 5 p.m. ET 5/12/23.

Docket Numbers: ER23–1687–000.
Applicants: Valley Center ESS, LLC.
Description: § 205(d) Rate Filing: Revised Market-Based Rate Tariff to be effective 4/22/2023.
Filed Date: 4/21/23.
Accession Number: 20230421–5187.
Comment Date: 5 p.m. ET 5/12/23.

Docket Numbers: ER23–1688–000.
Applicants: Voyager Wind IV Expansion, LLC.
Description: § 205(d) Rate Filing: Revised Market-Based Rate Tariff to be effective 4/22/2023.
Filed Date: 4/21/23.
Accession Number: 20230421–5190.
Comment Date: 5 p.m. ET 5/12/23.

Docket Numbers: ER23–1689–000.
Applicants: New England Power Pool Participants Committee, ISO New England Inc.

Description: § 205(d) Rate Filing: New England Power Pool Participants Committee submits tariff filing per 35.13(a)(2)(iii: NTE CT Termination Filing to be effective 6/22/2023.

Filed Date: 4/21/23.

Accession Number: 20230421–5198.

Comment Date: 5 p.m. ET 5/12/23.

Docket Numbers: ER23–1690–000.

Applicants: Northern States Power Company, a Minnesota corporation.

Description: § 205(d) Rate Filing: 2023–04–21 MMPA—East Shakopee—SISA—736 to be effective 4/22/2023.

Filed Date: 4/21/23.

Accession Number: 20230421–5201.

Comment Date: 5 p.m. ET 5/12/23.

Take notice that the Commission received the following qualifying facility filings:

Docket Numbers: QF23–350–000.

Applicants: City Solar Garden LLC.

Description: Refund Report of City Solar Garden LLC.

Filed Date: 4/20/23.

Accession Number: 20230420–5243.

Comment Date: 5 p.m. ET 5/11/23.

Docket Numbers: QF23–351–000.

Applicants: Charter Hill Solar, LLC.

Description: Refund Report of Charter Hill Solar, LLC.

Filed Date: 4/20/23.

Accession Number: 20230420–5244.

Comment Date: 5 p.m. ET 5/11/23.

Docket Numbers: QF23–352–000.

Applicants: MLH Phase 3, LLC.

Description: Refund Report of MLH Phase 3, LLC.

Filed Date: 4/20/23.

Accession Number: 20230420–5245.

Comment Date: 5 p.m. ET 5/11/23.

The filings are accessible in the Commission's eLibrary system (*https://elibrary.ferc.gov/idmws/search/fercgensearch.asp*) by querying the docket number.

Any person desiring to intervene or protest in any of the above proceedings must file in accordance with Rules 211 and 214 of the Commission's Regulations (18 CFR 385.211 and 385.214) on or before 5:00 p.m. Eastern time on the specified comment date. Protests may be considered, but intervention is necessary to become a party to the proceeding.

eFiling is encouraged. More detailed information relating to filing requirements, interventions, protests, service, and qualifying facilities filings can be found at: *http://www.ferc.gov/docs-filing/efiling/filing-req.pdf.* For other information, call (866) 208–3676 (toll free). For TTY, call (202) 502–8659.

Dated: April 21, 2023.

Debbie-Anne A. Reese,

Deputy Secretary.

[FR Doc. 2023–08921 Filed 4–26–23; 8:45 am]

BILLING CODE 6717–01–P

DEPARTMENT OF ENERGY

Federal Energy Regulatory Commission

Combined Notice of Filings

Take notice that the Commission has received the following Natural Gas & Oil Pipeline Rate and Refund Report filings:

Filings Instituting Proceedings

Docket Numbers: PR23–46–000.

Applicants: Energy Transfer Fuel, LP.

Description: § 284.123(g) Rate Filing: Energy Transfer Fuel LP Certification of Unchg State Rate to be effective 3/26/2023.

Filed Date: 4/20/23.

Accession Number: 20230420–5139.

Comment Date: 5 p.m. ET 5/11/23.

Protest Date: 5 p.m. ET 6/20/23.

Docket Numbers: PR23–47–000.

Applicants: Permian Highway Pipeline LLC.

Description: § 284.123(g) Rate Filing: Revised Fuel Allocation Provisions to be effective 4/1/2023.

Filed Date: 4/21/23.

Accession Number: 20230421–5084.

Comment Date: 5 p.m. ET 5/12/23.

Docket Numbers: RP23–693–000.

Applicants: Equitrans, L.P.

Description: § 4(d) Rate Filing: Equitrans Clean Up Filing—April 2023 to be effective 5/21/2023.

Filed Date: 4/20/23.

Accession Number: 20230420–5148.

Comment Date: 5 p.m. ET 5/2/23.

Docket Numbers: RP23–694–000.

Applicants: Equitrans, L.P.

Description: § 4(d) Rate Filing: FOSA Updates—April 2023 to be effective 5/21/2023.

Filed Date: 4/20/23.

Accession Number: 20230420–5149.

Comment Date: 5 p.m. ET 5/2/23.

Docket Numbers: RP23–695–000.

Applicants: Colorado Interstate Gas Company, L.L.C.

Description: § 4(d) Rate Filing: Non-Conforming Agreements Update (PSCo) to be effective 5/1/2023.

Filed Date: 4/20/23.

Accession Number: 20230420–5151.

Comment Date: 5 p.m. ET 5/2/23.

Docket Numbers: RP23–696–000.

Applicants: Florida Southeast Connection, LLC.

Description: Annual System Balancing Adjustment Report for 2023 of Florida Southeast Connection, LLC.

Filed Date: 4/20/23.

Accession Number: 20230420–5236.

Comment Date: 5 p.m. ET 5/2/23.

Docket Numbers: RP23–697–000.

Applicants: Alliance Pipeline L.P.

Description: Compliance filing: Action Alert—Request for Tariff Waiver to be effective N/A.

Filed Date: 4/21/23.

Accession Number: 20230421–5001.

Comment Date: 5 p.m. ET 5/3/23.

Docket Numbers: RP23–698–000.

Applicants: Sierrita Gas Pipeline LLC.

Description: § 4(d) Rate Filing: Sierrita Gas Pipeline Quarterly FL&U Filing April 2023 to be effective 6/1/2023.

Filed Date: 4/21/23.

Accession Number: 20230421–5066.

Comment Date: 5 p.m. ET 5/3/23.

Any person desiring to intervene or protest in any of the above proceedings must file in accordance with Rules 211 and 214 of the Commission's Regulations (18 CFR 385.211 and 385.214) on or before 5:00 p.m. Eastern time on the specified comment date. Protests may be considered, but intervention is necessary to become a party to the proceeding.

Filings in Existing Proceedings

Docket Numbers: PR23–22–001.

Applicants: SCOOP Express, LLC.

Description: § 284.123(g) Rate Filing: ET SCOOP Express LLC submits tariff filing per 284.123(b)(2), (: ET Scoop Express LLC Amended SOC to be effective 12/15/2022.

Filed Date: 4/20/23.

Accession Number: 20230420–5137.

Comment Date: 5 p.m. ET 5/4/23.

Any person desiring to protest in any of the above proceedings must file in accordance with Rule 211 of the Commission's Regulations (18 CFR 385.211) on or before 5:00 p.m. Eastern time on the specified comment date.

The filings are accessible in the Commission's eLibrary system (*https://elibrary.ferc.gov/idmws/search/fercgensearch.asp*) by querying the docket number.

eFiling is encouraged. More detailed information relating to filing requirements, interventions, protests, service, and qualifying facilities filings can be found at: *http://www.ferc.gov/docs-filing/efiling/filing-req.pdf.* For other information, call (866) 208–3676 (toll free). For TTY, call (202) 502–8659.

Dated: April 21, 2023.

Debbie-Anne A. Reese,

Deputy Secretary.

[FR Doc. 2023–08930 Filed 4–26–23; 8:45 am]

BILLING CODE 6717–01–P

ENVIRONMENTAL PROTECTION AGENCY

[EPA–HQ–OW–2015–0641; FRL–10930–01–OMS]

Agency Information Collection Activities; Submission to the Office of Management and Budget for Review and Approval; Comment Request; BEACH Act Grant Program (Renewal)

AGENCY: Environmental Protection Agency (EPA).

ACTION: Notice.

SUMMARY: The Environmental Protection Agency (EPA) has submitted an information collection request (ICR), Beaches Environmental Assessment and Coastal Health (BEACH) Act Grant Program (EPA ICR Number 2048.07, OMB Control Number 2040–0244) to the Office of Management and Budget (OMB) for review and approval in accordance with the Paperwork Reduction Act. This is a proposed extension of the ICR, which is currently approved through April 30, 2023. Public comments were previously requested via the **Federal Register** on July 11, 2022 during a 60-day comment period. This notice allows for an additional 30 days for public comments.

DATES: Comments may be submitted on or before May 30, 2023.

ADDRESSES: Submit your comments, referencing Docket ID Number EPA–HQ–OW–2015–0641, to EPA online using *www.regulations.gov* (our preferred method), by email to *OW-Docket@epa.gov,* or by mail to: EPA Docket Center, Environmental Protection Agency, Mail Code 28221T, 1200 Pennsylvania Ave. NW, Washington, DC 20460. EPA's policy is that all comments received will be included in the public docket without change including any personal information provided, unless the comment includes profanity, threats, information claimed to be Confidential Business Information (CBI) or other information whose disclosure is restricted by statute.

Submit written comments and recommendations to OMB for the proposed information collection within 30 days of publication of this notice to *www.reginfo.gov/public/do/PRAMain.* Find this particular information collection by selecting ''Currently under 30-day Review—Open for Public Comments'' or by using the search function.

FOR FURTHER INFORMATION CONTACT: Lisa Larimer, Office of Water, Office of Science and Technology, Standards and Health Protection Division, (4305T), Environmental Protection Agency, 1200 Pennsylvania Ave. NW, Washington, DC 20460; telephone number: (202) 566–1017; fax number: (202) 566–0409; email address: *larimer.lisa@epa.gov.*

SUPPLEMENTARY INFORMATION: This is a proposed extension of the ICR, which is currently approved through April 30, 2023. An agency may not conduct or sponsor and a person is not required to respond to a collection of information unless it displays a currently valid OMB control number.

Public comments were previously requested via the **Federal Register** on July 11, 2022 during a 60-day comment period (87 FR 41124). This notice allows for an additional 30 days for public comments. Supporting documents, which explain in detail the information that the EPA will be collecting, are available in the public docket for this ICR. The docket can be viewed online at *www.regulations.gov* or in person at the EPA Docket Center, WJC West, Room 3334, 1301 Constitution Ave., NW, Washington, DC. The telephone number for the Docket Center is 202–566–1744. For additional information about EPA's public docket, visit *http://www.epa.gov/dockets.*

Abstract: The Beaches Environmental Assessment and Coastal Health (BEACH) Act amends the Clean Water Act (CWA) in part and authorizes the U.S. Environmental Protection Agency (EPA) to award BEACH Act Grants to coastal and Great Lakes states, tribes, and territories (collectively referred to as jurisdictions) to develop and implement beach monitoring and notification programs. The grants assist those jurisdictions to develop and implement a consistent approach to monitor coastal recreational water quality; assess, manage, and communicate health risks from waterborne microbial contamination; notify the public of pollution occurrences; and post beach advisories and closures to prevent public exposure to microbial pathogens.

Per CWA section 406 (33 U.S.C. 1346), to qualify for a BEACH Act grant a jurisdiction must submit information to EPA documenting that its beach monitoring and notification program is consistent with performance criteria outlined in the *National Beach Guidance and Required Performance Criteria for Grants, 2014 Edition.* In addition, recipients of BEACH Act grants must submit water quality monitoring data and information on public notification actions to EPA. All beach program information will be collected by EPA's Office of Science and Technology, stored in the Beach Advisory and Closing On-line Notification (BEACON) system, and accessible via EPA's Beaches website for use by the public; state, tribal, territorial, and local environmental and public health agencies; and EPA.

Form Numbers: None.

Respondents/affected entities: Potential respondents to this ICR are recipients of BEACH Act grants, including 29 coastal and Great Lakes states, 4 tribes, 5 U.S. territories, and Erie County, Pennsylvania.

Respondent's obligation to respond: Required to obtain or retain a benefit (Section 406 of the Clean Water Act, 33 U.S.C. 1346).

Estimated number of respondents: 40 (total).

Frequency of response: Annual; however, the Agency encourages more frequent reporting to provide more up-to-date information to the public.

Total estimated burden: 322,954 hours (per year). Burden is defined at 5 CFR 1320.03(b)

Total estimated cost: $22,976,864 (per year), includes $9,955,800 annualized capital or operation & maintenance costs.

Changes in the estimates: There is an increase of 230,953 hours in the total estimated respondent burden compared with the ICR currently approved by OMB. This increase adjusts estimates in response to feedback to better account for labor costs and to structure the ICR to better align with the burden associated with the present program. Specifically, the increase is due to three main reasons: (1) the existing ICR does not fully capture the respondent labor associated with collecting water quality samples, (2) the restructuring of actions into developmental and annual grant activities and subsequent recalculation of the associated burden, and (3) the anticipated addition of one tribal respondent. The total respondent cost increased by $7.459M due to the changes described above, an increase in the cost to analyze water samples, and slight increases in the salary rates. However, this increase is offset by a $1.5M decrease in respondent O&M cost resulting from using actual respondent sampling frequency data rather than previous estimates that overcounted sampling. Agency burden and cost increased by 117 hours because the existing ICR did not capture some of the labor associated with the administration of beach grants or the Agency O&M cost for contractor assistance to jurisdictions

with data submission and maintaining the statutorily required database.

Courtney Kerwin,

Director, Regulatory Support Division.

[FR Doc. 2023–08840 Filed 4–26–23; 8:45 am]

BILLING CODE 6560–50–P

ENVIRONMENTAL PROTECTION AGENCY

[EPA–HQ–OECA–2022–0812; FRL–10933–01–OMS]

Agency Information Collection Activities; Submission to the Office of Management and Budget for Review and Approval; Comment Request; State Review Framework (Renewal)

AGENCY: Environmental Protection Agency (EPA).

ACTION: Notice.

SUMMARY: The Environmental Protection Agency (EPA) has submitted an information collection request (ICR), State Review Framework (EPA ICR Number 2185.08, OMB Control Number 2020–0031) to the Office of Management and Budget (OMB) for review and approval in accordance with the Paperwork Reduction Act. This is a proposed extension of the ICR, which is currently approved through April 30, 2023. Public comments were previously requested via the **Federal Register** on September 19, 2022, during a 60-day comment period. This notice allows for an additional 30 days for public comments.

DATES: Comments may be submitted on or before May 30, 2023.

ADDRESSES: Submit your comments, referencing Docket ID Number EPA–HQ–OECA–2020–0031, to EPA online using *www.regulations.gov* (our preferred method), or by email to *docket.oeca@epa.gov,* or by mail to: EPA Docket Center, Environmental Protection Agency, Mail Code 28221T, 1200 Pennsylvania Ave. NW, Washington, DC 20460. EPA's policy is that all comments received will be included in the public docket without change including any personal information provided, unless the comment includes profanity, threats, information claimed to be Confidential Business Information (CBI) or other information whose disclosure is restricted by statute.

Submit written comments and recommendations to OMB for the proposed information collection within 30 days of publication of this notice to *www.reginfo.gov/public/do/PRAMain.* Find this particular information collection by selecting ''Currently under 30-day Review—Open for Public Comments'' or by using the search function.

FOR FURTHER INFORMATION CONTACT: Dave Hoffman, Office of Enforcement and Compliance Assurance, Office of Compliance, Environmental Protection Agency, 1200 Pennsylvania Ave. NW, Washington, DC 20460; telephone number: (202) 564–0725; email address: *Hoffman.dave@epa.gov.*

SUPPLEMENTARY INFORMATION: This is a proposed extension of the ICR, which is currently approved through April 30, 2023. An agency may not conduct or sponsor and a person is not required to respond to a collection of information unless it displays a currently valid OMB control number.

Public comments were previously requested via the **Federal Register** on September 19, 2022, during a 60-day comment period (87 FR 57193). This notice allows for an additional 30 days for public comments. Supporting documents, which explain in detail the information that the EPA will be collecting, are available in the public docket for this ICR. The docket can be viewed online at *www.regulations.gov* or in person at the EPA Docket Center, WJC West, Room 3334, 1301 Constitution Ave. NW, Washington, DC. The telephone number for the Docket Center is 202–566–1744. For additional information about EPA's public docket, visit *http://www.epa.gov/dockets.*

Abstract: The State Review Framework is an oversight tool designed to assess state performance in enforcement and compliance assurance. The Framework's goal is to evaluate state performance by examining existing data to provide a consistent level of oversight and develop a uniform mechanism by which EPA Regions, working collaboratively with their states, can ensure state environmental agencies consistently implement the national compliance and enforcement program to meet agreed-upon goals. Furthermore, the Framework is designed to foster dialogue on enforcement and compliance performance between states to enhance relationships and increase feedback, which will in turn lead to consistent program management and improved environmental results. This request will allow OECA to review and collect information from state and local agency enforcement and compliance files, to support the State Review Framework implementation from FY 2024 to FY 2027. It will also allow EPA to make inquiries to assess the State Review Framework process, including consistency achieved among the EPA Regions and states, resources required to conduct reviews, and overall effectiveness of the program.

Form Numbers: None.

Respondents/affected entities: States and localities and territories.

Respondent's obligation to respond: mandatory (as part of program authorization under the Clean Water, Clean Air, Safe Drinking Water and Resource Conservation and Recovery Acts).

Estimated number of respondents: 213 (total).

Frequency of response: Once every 5 years.

Total estimated burden: 12,993 hours (per year). Burden is defined at 5 CFR 1320.03(b).

Total estimated cost: $937,030 (per year), includes $0 annualized capital or operation & maintenance costs.

Changes in the Estimates: There is an increase of 87 hours in the total estimated per-response burden compared with the ICR currently approved by OMB. This increase is due to the addition of the safe drinking water act enforcement review pilot, which was not captured in the previous ICR. This pilot is not formally part of the SRF, but the Agency believes this ICR is an appropriate forum to collect input, due to their similarities in workload and purpose. At the conclusion of the pilot, the agency will review the program and if necessary, revise this ICR. In addition, there is an increase in the number of respondents from 54 to 213 due to inclusion of all media (CAA, CWA, RCRA and SDWA) for 50 states and 4 territories. Previous ICR's for this collection included a single response for each state/territory, whereas this ICR utilized a different methodology to capture the burden more accurately.

Courtney Kerwin,

Director, Regulatory Support Division.

[FR Doc. 2023–08873 Filed 4–26–23; 8:45 am]

BILLING CODE 6560–50–P

ENVIRONMENTAL PROTECTION AGENCY

[FRL–10915–01–OAR]

California State Nonroad Engine Pollution Control Standards; Commercial Harbor Craft; Notice of Public Hearing

AGENCY: Environmental Protection Agency.

ACTION: Notice of opportunity for public hearing and comment.

SUMMARY: The California Air Resources Board (CARB) has notified EPA that is

has adopted amendments to its Commercial Harbor Craft (CHC) regulation. By letter dated January 31, 2023, CARB asked that EPA authorize these amendments pursuant to section 209(e) of the Clean Air Act (CAA). On March 17, 2023, EPA announced an opportunity for public hearing and request for public comment on this request. In that Notice, EPA announced that it would only hold a virtual public hearing if a request for hearing was submitted and that the written comment period would close on May 1, 2023. EPA also announced that it would extend the written comment closure date in the event a virtual public hearing was requested and held. EPA has received multiple requests for a virtual public hearing, so therefore EPA is announcing the date of the virtual public hearing and the new comment deadline for CARB's request.[1]

DATES: EPA will hold a virtual public hearing concerning CARB's request on June 1, 2023, beginning at 10 a.m. EST. Any party may submit written comments on this request by July 1, 2023. Parties wishing to present oral testimony at the virtual public hearing should email one of the persons noted below in the **FOR FURTHER INFORMATION CONTACT**, by or before May 25, 2023.

FOR FURTHER INFORMATION CONTACT: David Dickinson, Office of Transportation and Air Quality, Transportation and Climate Division, Environmental Protection Agency; Email Address: *dickinson.david@epa.gov;* (202) 343–9256; or Kayla Steinberg, Office of Transportation and Air Quality, Transportation and Climate Division, Environmental Protection Agency; Email Address: *steinberg.kayla@epa.gov;* 202–564–7658.

ADDRESSES: You may submit your comments, identified by Docket ID No. EPA–HQ–OAR–2023–0153 by any of the following methods:

- *Federal eRulemaking Portal: https://www.regulations.gov* (our preferred method). Follow the online instructions for submitting comments.
- *Email:a-and-r-docket@epa.gov.*
- *Mail:* U.S. Environmental Protection Agency, EPA Docket Center, OAR, Docket EPA–HQ–OAR–2023–0153, Mail Code 28221T, 1200 Pennsylvania Avenue NW, Washington, DC 20460.
- *Hand Delivery or Courier (by scheduled appointment only):* EPA Docket Center, WJC West Building, Room 3334, 1301 Constitution Avenue NW, Washington, DC 20004. The Docket Center's hours of operations are 8:30 a.m.–4:30 p.m., Monday–Friday (except federal holidays). Instructions: All submissions received must include the Docket ID No. for this action. Comments received may be posted without change to *https://www.regulations.gov,* including any personal information provided. For detailed instructions on sending comments and additional information on the process for this action, see the ''Public Participation'' heading of the **SUPPLEMENTARY INFORMATION** section of this document.
- *Public Hearing:* EPA will hold a public hearing on June 1, 2023, at 10 a.m. EST. More information about the public hearing, including registration and viewing information, will be posted at *https://www.epa.gov/state-and-local-transportation/vehicle-emissions-california-waivers-and-authorizations* (click ''**Federal Register** Notices List'' and find the link in the entry for this Notice). Please visit that page for the most up-to-date information about this public hearing. Any questions can be directed by email to one of the persons noted in the **FOR FURTHER INFORMATION CONTACT**.
- EPA's Office of Transportation and Air Quality also maintains a web page that contains general information on its review of California waiver and authorization requests. Included on that page are links to prior waiver and authorization **Federal Register** notices. This page will also include updates and additional information regarding this authorization proceeding. The page can be accessed at *https://www.epa.gov/state-and-local-transportation/vehicle-emissions-california-waivers-and-authorizations.*

SUPPLEMENTARY INFORMATION:

Public Participation: EPA will allow each commenter 5 minutes to provide oral testimony. In addition, the EPA recommends submitting the text of your oral testimony to the docket. Written statements and supporting information submitted during the comment period will be considered with the same weight as oral testimony and supporting information present at the virtual public hearing. It is not necessary to register in order to attend the public on June 1, 2023, at 10 a.m. EST. More information about the public hearing, including registration and viewing information, will be posted at *https://www.epa.gov/state-and-local-transportation/vehicle-emissions-california-waivers-and-authorizations* (click ''**Federal Register** Notices List'' and find the link in the entry for this Notice). Please visit that page for the most up-to-date information about this public hearing. Those wishing to present oral testimony at the virtual public hearing should notify a person in the **FOR FURTHER INFORMATION CONTACT** noted above and should do so by or before May 25, 2023.

Dated: April 21, 2023.

Karl Simon,

Director, Transportation and Climate Division, Office of Transportation and Air Quality, Office of Air and Radiation.

[FR Doc. 2023–08871 Filed 4–26–23; 8:45 am]

BILLING CODE 6560–50–P

[1] In the same March 17 Notice (88 FR 16439), EPA announced an opportunity for public hearing and request for public comment on CARB's request for a waiver for another regulation, its 2020 Ocean-Going Vessels At-Berth Amendments. EPA did not receive any requests for a virtual public hearing on CARB's 2020 Ocean-Going Vessels At-Berth Amendments before the public hearing request deadline. Therefore, EPA is not holding a virtual public hearing or extending the written comment closure date for the 2020 Ocean-Going Vessels At Berth Amendment waiver request.

ENVIRONMENTAL PROTECTION AGENCY

[EPA–HQ–OW–2016–0178; FRL–10935–01–OMS]

Agency Information Collection Submission to the Office of Management and Budget for Review and Approval; Comment Request; EPA Application Materials for the Water Infrastructure Finance and Innovation Act (Renewal)

AGENCY: Environmental Protection Agency (EPA).

ACTION: Notice.

SUMMARY: The Environmental Protection Agency (EPA) has submitted an information collection request (ICR), EPA Application Materials for the Water Infrastructure Finance and Innovation Act (EPA ICR Number 2549.02, OMB Control Number 2040–0292) to the Office of Management and Budget (OMB) for review and approval in accordance with the Paperwork Reduction Act. This is a proposed extension of the ICR, which is currently approved through April 30, 2023. Public comments were previously requested via the **Federal Register** on September 19, 2022 during a 60-day comment period. This notice allows for an additional 30 days for public comments.

DATES: Comments may be submitted on or before May 30, 2023.

ADDRESSES: Submit your comments, referencing Docket ID Number EPA–HQ–OW–2016–0178, to EPA online using *www.regulations.gov* (our preferred method), or by mail to: EPA Docket Center, Environmental Protection Agency, Mail Code 28221T, 1200 Pennsylvania Ave. NW,

Washington, DC 20460. EPA's policy is that all comments received will be included in the public docket without change including any personal information provided, unless the comment includes profanity, threats, information claimed to be Confidential Business Information (CBI) or other information whose disclosure is restricted by statute.

Submit written comments and recommendations to OMB for the proposed information collection within 30 days of publication of this notice to *www.reginfo.gov/public/do/PRAMain.* Find this particular information collection by selecting ''Currently under 30-day Review—Open for Public Comments'' or by using the search function.

FOR FURTHER INFORMATION CONTACT: Amelia Letnes, Water Infrastructure Division, Office of Wastewater Management, 4201–T, Environmental Protection Agency, 1200 Pennsylvania Ave. NW, Washington, DC 20460; telephone number: 202–564–5627; email address: *Letnes.amelia@epa.gov.*

SUPPLEMENTARY INFORMATION: This is a proposed extension of the ICR, which is currently approved through April 30, 2023. An agency may not conduct or sponsor and a person is not required to respond to a collection of information unless it displays a currently valid OMB control number.

Public comments were previously requested via the **Federal Register** on September 19, 2022 during a 60-day comment period (87 FR 57194). This notice allows for an additional 30 days for public comments. Supporting documents which explain in detail the information that the EPA will be collecting are available in the public docket for this ICR. The docket can be viewed online at *www.regulations.gov* or in person at the EPA Docket Center, WJC West, Room 3334, 1301 Constitution Ave. NW, Washington, DC. The telephone number for the Docket Center is 202–566–1744. For additional information about EPA's public docket, visit *http://www.epa.gov/dockets.*

Abstract: The collection of information is necessary in order to receive applications for credit assistance pursuant to section 5024 of the Water Infrastructure Finance and Innovation Act (WIFIA) of 2014, 33 U.S.C. 3903. The purpose of the WIFIA program is to provide Federal credit assistance in the form of direct loans and loan guarantees to eligible water infrastructure projects.

WIFIA requires that an eligible entity submit to the Administrator an application at such time, in such manner, and containing such information, as the Secretary or the Administrator *may require* to receive assistance under WIFIA. In order to satisfy these requirements, EPA must collect an application from prospective borrowers seeking funding. The Letters of Interest and Applications collected from prospective borrowers through this solicitation will be used by the EPA, WIFIA program staff, and reviewers to evaluate applications for credit assistance under the WIFIA eligibility requirements and selection criteria.

Form Numbers: EPA 6100–030, 6100–031, 6100–32, 6100–033, 6100–054, 6100–080.

Respondents/affected entities: Corporations, partnerships, joint ventures, trusts, federal, state, or local government entities, tribal governments or a consortium of tribal governments, and state infrastructure finance authorities.

Respondent's obligation to respond: Required to obtain or retain a benefit (section 5024 of WIFIA, 33 U.S.C. 3903).

Estimated number of respondents: 105 per year (total).

Frequency of response: One per funding round.

Total estimated burden: 10,450 hours (per year). Burden is defined at 5 CFR 1320.03(b).

Total estimated cost: $10,772,065 (per year), which includes $10,000,000 annualized capital or operation & maintenance costs.

Changes in the Estimates: There is a decrease of 375 hours in the total estimated respondent burden compared with the ICR currently approved by OMB. This decrease is due to EPA anticipating fewer collections based on average numbers in the past 3 years. That decrease is offset by a small increase due to a new form.

Courtney Kerwin,

Director, Regulatory Support Division.

[FR Doc. 2023–08874 Filed 4–26–23; 8:45 am]

BILLING CODE 6560–50–P

ENVIRONMENTAL PROTECTION AGENCY

[EPA–HQ–OAR–2022–0708: FRL–10931–01–OMS]

Agency Information Collection Activities; Submission to the Office of Management and Budget for Review and Approval; Comment Request; National Refrigerant Recycling and Emissions Reduction Program (Renewal)

AGENCY: Environmental Protection Agency (EPA).

ACTION: Notice.

SUMMARY: The Environmental Protection Agency (EPA) has submitted an information collection request (ICR), National Refrigerant Recycling and Emissions Reduction Program'' (EPA ICR Number 1626.18, OMB Control Number 2060–0256) to the Office of Management and Budget (OMB) for review and approval in accordance with the Paperwork Reduction Act. This is a proposed extension of the ICR, which is currently approved through April 30, 2023. Public comments were previously requested via the **Federal Register** on September 19, 2022 during a 60-day comment period. This notice allows for an additional 30 days for public comments.

DATES: Comments may be submitted on or before May 30, 2023.

ADDRESSES: Submit your comments, referencing Docket ID Number EPA–HQ–OAR–2022–0708, to EPA online using *www.regulations.gov* (our preferred method), by email to *a-and-r-docket@epa.gov,* or by mail to: EPA Docket Center, Environmental Protection Agency, Mail Code 28221T, 1200 Pennsylvania Ave. NW, Washington, DC 20460. EPA's policy is that all comments received will be included in the public docket without change including any personal information provided, unless the comment includes profanity, threats, information claimed to be Confidential Business Information (CBI) or other information whose disclosure is restricted by statute.

Submit written comments and recommendations to OMB for the proposed information collection within 30 days of publication of this notice to *www.reginfo.gov/public/do/PRAMain.* Find this particular information collection by selecting ''Currently under 30-day Review—Open for Public Comments'' or by using the search function.

FOR FURTHER INFORMATION CONTACT: Robert Burchard, Stratospheric Protection Division, Office of Atmospheric Programs, 6205A, Environmental Protection Agency, 1200 Pennsylvania Ave. NW, Washington, DC 20460; telephone number: (202) 343–9126; email address: *burchard.robert@epa.gov.*

SUPPLEMENTARY INFORMATION: This is a proposed extension of the ICR, which is currently approved through April 30, 2023. An agency may not conduct or sponsor and a person is not required to respond to a collection of information unless it displays a currently valid OMB control number.

Public comments were previously requested via the **Federal Register** on September 19, 2022, during a 60-day comment period (87 FR 57194). This notice allows for an additional 30 days for public comments. Supporting documents, which explain in detail the information that the EPA will be collecting, are available in the public docket for this ICR. The docket can be viewed online at *www.regulations.gov* or in person at the EPA Docket Center, WJC West, Room 3334, 1301 Constitution Ave. NW, Washington, DC. The telephone number for the Docket Center is 202–566–1744. For additional information about EPA's public docket, visit *http://www.epa.gov/dockets.*

Abstract: Section 608 of the Clean Air Act (CAA), also known as the National Recycling and Emission Reduction Program (the Program), directs the Environmental Protection Agency (EPA) to issue regulations governing the use of ozone-depleting substances (ODS), including chlorofluorocarbons (CFCs) and hydrochlorofluorocarbons (HCFCs), during the maintenance, service, repair, or disposal of air-conditioning and refrigeration appliances. Section 608 also prohibits knowingly venting or releasing ozone-depleting and substitute refrigerants in the course of maintaining, servicing, repairing, or disposing of appliances or industrial process refrigeration except for de minimis releases associated with good faith attempts to recycle or recover refrigerants. The regulations require persons servicing refrigeration and air-conditioning appliances to follow certain service practices that reduce emissions of refrigerants. The regulations also establish certification programs for technicians, recovery/recycling equipment, and refrigerant reclamation. In addition, EPA requires that refrigerants contained in appliances be removed prior to disposal of the appliances and that all refrigeration and air-conditioning appliances be provided with a servicing aperture that facilitates recovery of the refrigerant. The Agency requires that substantial refrigerant leaks in appliances containing ozone-depleting refrigerant be repaired when they are discovered.

Form Numbers: 5900–404, 5900–405, 5900–407.

Respondents/affected entities: Entities required to comply with reporting and recordkeeping requirements include technicians; technician certification programs; refrigerant wholesalers; refrigerant reclaimers; refrigerant recovery equipment certification programs; certain refrigeration and air-conditioning equipment owners and/or operators; and other establishments that perform refrigerant removal, service, or disposal.

Respondent's obligation to respond: Mandatory (40 CFR part 82, subpart F).

Estimated number of respondents: 572,727 (total).

Frequency of response: The frequency of responses varies from once a year to daily.

Total estimated burden: 425,514 hours (per year). Burden is defined at 5 CFR 1320.03(b)

Total estimated cost: $31,432,946 (per year), includes $0 annualized capital or operation & maintenance costs.

Changes in the Estimates: There is a decrease of 8,845 hours in the total estimated respondent burden compared with the ICR currently approved by OMB. This decrease is due to adjusted respondent estimates for appliance leak repair and retrofit or retirement plan extension requests based on recently available industry data and reported activity.

Courtney Kerwin,

Director, Regulatory Support Division.

[FR Doc. 2023–08872 Filed 4–26–23; 8:45 am]

BILLING CODE 6560–50–P

EXPORT-IMPORT BANK OF THE UNITED STATES

[Public Notice EIB–2023–0003]

Application for Final Commitment for a Long-Term Loan or Financial Guarantee in Excess of $100 Million: AP089473XX

AGENCY: Export-Import Bank of the United States.

ACTION: Notice.

SUMMARY: This Notice is to inform the public the Export-Import Bank of the United States (''EXIM'') has received an application for final commitment for a long-term loan or financial guarantee in excess of $100 million. Comments received within the comment period specified below will be presented to the EXIM Board of Directors prior to final action on this Transaction.

DATES: Comments must be received on or before May 22, 2023 to be assured of consideration before final consideration of the transaction by the Board of Directors of EXIM.

ADDRESSES: Comments may be submitted through *Regulations.gov* at *www.regulations.gov.* To submit a comment, enter EIB–2023–0003 under the heading ''Enter Keyword or ID'' and select Search. Follow the instructions provided at the Submit a Comment screen. Please include your name, company name (if any) and EIB–2023–0003 on any attached document.

SUPPLEMENTARY INFORMATION:

Reference: AP089473XX.

Purpose and use:

Brief description of the purpose of the transaction: Construction of two large photovoltaic (PV) solar power plants in Angola. The first power plant is expected to generate 400 MW of power in Malanje Province. The second plant will generate 104 MW of power in Luanda Province.

Brief non-proprietary description of the anticipated use of the items being exported: Provide solar-generated electricity to underserved rural areas of Angola.

Once completed, these two large solar PV generation projects will supply 6 to 10% of the country's total electric generation capacity. A transmission line will connect each plant to an existing Angola Ministry of Energy and Water (MINEA) substation.

Parties:

Principal Supplier: Omatapalo, Inc.

Obligor: Ministry of Finance of the Republic of Angola

Guarantor(s): None

Description of items being exported: Solar panels, connectors, switches, sensors and other equipment and design and engineering services for the construction of two photovoltaic (PV) solar power plants.

Information on decision: Information on the final decision for this transaction will be available in the ''Summary Minutes of Meetings of Board of Directors'' on *http://exim.gov/newsandevents/boardmeetings/board/.*

Confidential information: Please note that this notice does not include confidential or proprietary business information; information which, if disclosed, would violate the Trade Secrets Act; or information which would jeopardize jobs in the United States by supplying information that competitors could use to compete with companies in the United States.

Authority: Section 3(c)(10) of the Export-Import Bank Act of 1945, as amended (12 U.S.C. 635a(c)(10)).

Joyce B. Stone,

Assistant Corporate Secretary.

[FR Doc. 2023–08866 Filed 4–26–23; 8:45 am]

BILLING CODE 6690–01–P

FEDERAL ELECTION COMMISSION

Sunshine Act Meetings

TIME AND DATE: Tuesday, May 2, 2023 at 10:30 a.m. and its continuation at the

conclusion of the open meeting on May 4, 2023.

PLACE: 1050 First Street NE, Washington, DC and virtual. (This meeting will be a hybrid meeting.)

STATUS: This meeting will be closed to the public.

MATTERS TO BE CONSIDERED:

Compliance matters pursuant to 52 U.S.C. 30109.

Matters relating to internal personnel decisions, or internal rules and practices.

Investigatory records compiled for law enforcement purposes and production would disclose investigative techniques.

Information the premature disclosure of which would be likely to have a considerable adverse effect on the implementation of a proposed Commission action.

Matters concerning participation in civil actions or proceedings or arbitration.

CONTACT PERSON FOR MORE INFORMATION: Judith Ingram, Press Officer, Telephone: (202) 694–1220.

(Authority: Government in the Sunshine Act, 5 U.S.C. 552b.)

Vicktoria J. Allen,

Deputy Secretary of the Commission.

[FR Doc. 2023–09059 Filed 4–25–23; 4:15 pm]

BILLING CODE 6715–01–P

FEDERAL RESERVE SYSTEM

Formations of, Acquisitions by, and Mergers of Bank Holding Companies

The companies listed in this notice have applied to the Board for approval, pursuant to the Bank Holding Company Act of 1956 (12 U.S.C. 1841 *et seq.*) (BHC Act), Regulation Y (12 CFR part 225), and all other applicable statutes and regulations to become a bank holding company and/or to acquire the assets or the ownership of, control of, or the power to vote shares of a bank or bank holding company and all of the banks and nonbanking companies owned by the bank holding company, including the companies listed below.

The public portions of the applications listed below, as well as other related filings required by the Board, if any, are available for immediate inspection at the Federal Reserve Bank(s) indicated below and at the offices of the Board of Governors. This information may also be obtained on an expedited basis, upon request, by contacting the appropriate Federal Reserve Bank and from the Board's Freedom of Information Office at *https://www.federalreserve.gov/foia/request.htm.* Interested persons may express their views in writing on the standards enumerated in the BHC Act (12 U.S.C. 1842(c)).

Comments regarding each of these applications must be received at the Reserve Bank indicated or the offices of the Board of Governors, Ann E. Misback, Secretary of the Board, 20th Street and Constitution Avenue NW, Washington, DC 20551–0001, not later than May 30, 2023.

A. Federal Reserve Bank of Atlanta (Erien O. Terry, Assistant Vice President) 1000 Peachtree Street NE, Atlanta, Georgia 30309; Comments can also be sent electronically to *Applications.comments@atl.frb.org:*

1. *Smith & Hood Holding Company, L.L.C., Amite, Louisiana, and First Guaranty Bancshares, Inc., Hammond, Louisiana;* to acquire Lone Star Bank, Houston, Texas.

Board of Governors of the Federal Reserve System.

Michele Taylor Fennel,

Deputy Associate Secretary of the Board.

[FR Doc. 2023–08949 Filed 4–26–23; 8:45 am]

BILLING CODE P

DEPARTMENT OF HEALTH AND HUMAN SERVICES

Centers for Disease Control and Prevention

[60Day–FY–2023; Docket No. CDC–2023–0032]

Proposed Data Collection Submitted for Public Comment and Recommendations

AGENCY: Centers for Disease Control and Prevention (CDC), Department of Health and Human Services (HHS).

ACTION: Notice with comment period.

SUMMARY: The Centers for Disease Control and Prevention (CDC), as part of its continuing effort to reduce public burden and maximize the utility of government information, invites the general public and other federal agencies the opportunity to comment on a proposed and/or continuing information collection, as required by the Paperwork Reduction Act of 1995. This notice invites comment on a proposed information collection project titled Airline and Vessel Traveler Information Collection. The information collected will be used to conduct contact tracing and public health follow-up on travelers who have been identified in a risk exposure zone on a conveyance where a traveler was confirmed or suspected of traveling with infectious with a communicable disease of public health importance.

DATES: CDC must receive written comments on or before June 26, 2023.

ADDRESSES: You may submit comments, identified by Docket No. CDC–2023–0032 by either of the following methods:

- *Federal eRulemaking Portal: www.regulations.gov.* Follow the instructions for submitting comments.
- *Mail:* Jeffrey M. Zirger, Information Collection Review Office, Centers for Disease Control and Prevention, 1600 Clifton Road NE, MS H21–8, Atlanta, Georgia 30329.

Instructions: All submissions received must include the agency name and Docket Number. CDC will post, without change, all relevant comments to *www.regulations.gov.*

Please note: Submit all comments through the Federal eRulemaking portal (*www.regulations.gov*) or by U.S. mail to the address listed above.

FOR FURTHER INFORMATION CONTACT: To request more information on the proposed project or to obtain a copy of the information collection plan and instruments, contact Jeffrey M. Zirger, Information Collection Review Office, Centers for Disease Control and Prevention, 1600 Clifton Road NE, MS H21–8, Atlanta, Georgia 30329; Telephone: 404–639–7570; Email: *omb@cdc.gov.*

SUPPLEMENTARY INFORMATION: Under the Paperwork Reduction Act of 1995 (PRA) (44 U.S.C. 3501–3520), federal agencies must obtain approval from the Office of Management and Budget (OMB) for each collection of information they conduct or sponsor. In addition, the PRA also requires federal agencies to provide a 60-day notice in the **Federal Register** concerning each proposed collection of information, including each new proposed collection, each proposed extension of existing collection of information, and each reinstatement of previously approved information collection before submitting the collection to the OMB for approval. To comply with this requirement, we are publishing this notice of a proposed data collection as described below.

The OMB is particularly interested in comments that will help:

1. Evaluate whether the proposed collection of information is necessary for the proper performance of the functions of the agency, including whether the information will have practical utility;

2. Evaluate the accuracy of the agency's estimate of the burden of the proposed collection of information,

including the validity of the methodology and assumptions used;

3. Enhance the quality, utility, and clarity of the information to be collected;

4. Minimize the burden of the collection of information on those who are to respond, including through the use of appropriate automated, electronic, mechanical, or other technological collection techniques or other forms of information technology, *e.g.,* permitting electronic submissions of responses; and

5. Assess information collection costs.

Proposed Project

Airline and Vessel Traveler Information Collection (OMB Control No. 0920–1180, Exp. 6/30/2023)—Revision—National Center for Emerging and Zoonotic Infectious Diseases (NCEZID), Centers for Disease Control and Prevention (CDC).

Background and Brief Description

The rapid speed and tremendous volume of international travel, commerce, and human migration enable infectious disease threats to disperse worldwide in 24 hours—less time than the incubation period of most communicable diseases. These and other forces intrinsic to modern technology and ways of life favor the emergence of new communicable diseases and the reemergence or increased severity of known communicable diseases. Stopping a communicable disease outbreak—whether it is naturally occurring or intentionally caused—requires the use of the most rapid and effective public health tools available. Basic public health practices, such as collaborating with airlines in the identification and notification of potentially exposed travelers, are critical tools in the fight against the introduction, transmission, and spread of communicable disease in the United States. The collection of timely, accurate, and complete conveyance and traveler information enables CDC to notify state and local health departments in order for them to make contact with individuals who may have been exposed to a communicable disease during travel, or due to an outbreak of disease in a geographic location and identify appropriate next steps.

Section 361 of the Public Health Service Act (42 U.S.C. 264) authorizes the Secretary of the Department of Health and Human Services (DHHS) to make and enforce regulations necessary to prevent the introduction, transmission, or spread of communicable diseases from foreign countries into the United States, or from one State or possession into any other State or possession. Regulations that implement federal quarantine authority are currently promulgated in 42 CFR parts 70 and 71. Part 71 contains regulations to prevent the introduction, transmission, and spread of communicable diseases into the states and possessions of the United States.

Passenger and crewmember manifests are used to collect travelers information from airlines and vessels after travel has been completed and when a disease is confirmed or there is a suspected exposure. Manifests include locating and contact information, as well as information concerning where passengers sat while aboard an airline or their location (*e.g.* cabin numbers) and activities aboard a vessel. Manifests collect the following data elements:

- Full name (last, first, and, if available, middle or others);
- Date of birth;
- Sex;
- Country of residence;
- If a passport is required; passport number, passport country of issuance, and passport expiration date;
- If a travel document, other than a passport is required, travel document type, travel document number, travel document country of issuance and travel document expiration date;
- Address while in the United States (number and street, city, state, and zip code), except that U.S. citizens and lawful permanent residents will provide address of permanent residence in the U.S. (number and street, city, state, and zip code; as applicable);
- Primary contact phone number to include country code;
- Secondary contact phone number to include country code;
- Email address;
- Airline name;
- Flight number;
- City of departure;
- Departure date and time;
- City of arrival;
- Arrival date and time; and
- Seat number for all passengers

CDC also requests seat configuration for the requested contact area (example: AB/aisle/CDE/aisle/FG, bulkhead in front of row 9), identification on the manifest of the crew and what zone crew were assigned to, the identification of any babes-in-arms, and finally CDC requests the total number of passengers on board if measles is the cause of the investigation, due to the highly infectious nature of the disease. CDC then uses this passenger and crew manifest information to coordinate with state and local health departments or International Health Regulation (IHR) National Focal Points (NFPs) so they can follow-up with residents who live or are currently located in their jurisdiction. In most cases, the manifests are issued for air travel and state and local health departments or IHR NFPs are responsible for the contact investigations; airlines and vessels may take responsibility for follow-up of crew members. In rare cases, CDC may use the manifest data to perform the contact investigation directly.

CDC requests OMB approval for an estimated 875 annual burden hours. There are no costs to respondents other than their time to participate.

ESTIMATED ANNUALIZED BURDEN HOURS

Type of respondents	Form name	Number of respondents	Number of responses per respondent	Average burden per response (in hours)	Total burden (in hours)
Airline Medical Officer or Equivalent/Analysist/Travel Specialist/Manager Equivalent.	International Manifest Template/Informal Manifest Request Template.	350	1	150/60	875
Total					875

Jeffrey M. Zirger,

Lead, Information Collection Review Office, Office of Public Health Ethics and Regulations, Office of Science, Centers for Disease Control and Prevention.

[FR Doc. 2023–08909 Filed 4–26–23; 8:45 am]

BILLING CODE 4163–18–P

DEPARTMENT OF HEALTH AND HUMAN SERVICES

Centers for Disease Control and Prevention

[Docket No. CDC–2020–0046; NIOSH–233–C]

Hazardous Drugs: Procedures for Developing the NIOSH List of Hazardous Drugs in Healthcare Settings and Managing Hazardous Drug Exposures: Information for Healthcare Settings

AGENCY: Centers for Disease Control and Prevention (CDC), Department of Health and Human Services (HHS).

ACTION: General notice.

SUMMARY: The National Institute for Occupational Safety and Health (NIOSH) of the Centers for Disease Control and Prevention (CDC), in the Department of Health and Human Services (HHS), announces the following final documents are available in the docket and on the NIOSH website: *Procedures for Developing the NIOSH List of Hazardous Drugs in Healthcare Settings* and *Managing Hazardous Drug Exposures: Information for Healthcare Settings*.

DATES: The documents announced in this notice are available on April 27, 2023.

ADDRESSES: The documents announced in this notice are available in the docket at *www.regulations.gov* and through the NIOSH Hazardous Drug Exposures in Healthcare website at *https://www.cdc.gov/niosh/topics/hazdrug/default.html*.

FOR FURTHER INFORMATION CONTACT: Jerald Ovesen, NIOSH, Robert A. Taft Laboratories, 1090 Tusculum Avenue, MS–C15, Cincinnati, OH 45226; Telephone: (513) 533–8472 (not a toll-free number); Email: *jovesen@cdc.gov*.

SUPPLEMENTARY INFORMATION: This notice is organized as follows:

I. Public Participation
II. Background
III. Procedures for Developing the NIOSH List of Hazardous Drugs in Healthcare Settings
A. Section II. Purposes
1. Application to Occupational Settings
2. Coordination With U.S. Pharmacopeia (USP)
B. Section III. Background
1. Exposure to Drugs in Healthcare Settings
C. Section IV. NIOSH Definition of a Hazardous Drug
1. Investigational Drugs
2. Over-the-Counter Drugs
3. Veterinary Drugs
D. Section V. Identifying, Screening, Evaluating, and Reviewing a Drug for Placement on the List
1. Section V.A. Step 1: Identifying Potentially Hazardous Drugs
2. Section V.B. Step 2: Screening Potentially Hazardous Drugs
3. Section V.C. Step 3: Evaluating Potentially Hazardous Drugs
a. Toxicity Criteria
b. Developmental and Reproductive Toxicity
c. Organ Toxicity at Low Dose
d. Tabular Arrangement of Hazardous Drugs on the List
4. Section V.D. Step 4: Peer Review of Potentially Hazardous Drugs and Section V.E. Step 5: Public Review of Potentially Hazardous Drugs
IV. Managing Hazardous Drug Exposures: Information for Healthcare Settings
A. Peer Review
1. Charge 1.a. What additional information would improve [the document's] usefulness and why?
2. Charge 1.b. What changes could be made to improve the utility of the information?
3. Charge 1.c. What information is redundant, incorrect, missing, or not needed? Please Explain
4. Charge 2. Please Provide any Additional Studies or Scientific Information That Evaluate or Validate Engineering, Work Practice, or Administrative Controls To Reduce Exposures to Hazardous Drugs in Healthcare Settings
5. Charge 3. Please Provide any Additional Studies or Scientific Information That Support or Validate the Use of the NIOSH Recommended Control Strategies or Alternative Strategies To Control Exposures to Hazardous Drugs
6. Charge 4. Please Provide any Additional Studies or Scientific Information That Support or Validate Evidence-Based Strategies or Approaches for Controlling Exposures to Hazardous Drugs That Are Different From Those That NIOSH Has Proposed
7. Charge 5.a. What additional information would improve the usefulness of [the Table of Control approaches in chapter 8] and why?
8. Charge 5.b. What structural or format changes could be made to improve the utility of [the Table of Control approaches]?
9. Charge 5.c. What information is redundant, incorrect, missing, or not needed [in the Table of Control approaches]? Please Explain
10. Charge 6. What improvements could be made to this risk management information to make it more useful to employers and healthcare workers? Please Provide Specific Examples
11. Charge 7. Please Provide Information About Your Professional Experience, if any, of Implementing Control Strategies for Exposures to Hazardous Drugs in Healthcare or Similar Settings. Please Describe What You Found to be Most or Least Effective and Why. Include Relevant Publications if Available
12. Charge 8. Please Provide any Additional Comments or Suggestions Either as a List Below or Using Track Changes in the Attached Draft Document
B. Public Comments
1. Glossary
2. Chapter 1.0 Purpose and Scope
3. Chapter 6.0 Risk Management Plan
a. Section 6.2 Engineering Controls
—Closed System Transfer Devices
b. Section 6.3 Administrative Controls
—Alternative Duty
—Cleaning
—Counting Tablets
c. Section 6.4 Personal Protective Equipment
—Use of Gloves
—Use of Gowns, Sleeve Covers, and Head Covers
—Use of Respirators
d. Section 6.5 Surface Contamination
e. Section 6.6 Medical Surveillance
4. Chapter 7.0 Waste and Spill Control
a. Section 7.1 Hazardous Drug Waste and Section 7.2 Spill Control
—Waste Designation and Handling
5. Chapter 8.0 Control Approaches for Safe Handling of Hazardous Drugs by Activity and Formulations
a. Section 8.1 Introduction to Table of Control Approaches
b. Section 8.2 Control Approaches by Activity and Formulation
—Receiving and Packaging
—Transportation
—Compounding of Drugs
—Administration
6. USP <800>
7. Other Topics
V. Summary of Changes to Documents
A. Procedures for Developing the NIOSH List of Hazardous Drugs in Healthcare Settings
B. Managing Hazardous Drug Exposures: Information for Healthcare Settings

I. Public Participation

In a **Federal Register** notice published on May 1, 2020 (85 FR 25439), NIOSH invited the public to participate in the development of a suite of tools designed to assist with the identification of hazardous drugs and appropriate handling practices: (1) *Procedures for Developing the NIOSH List of Hazardous Drugs in Healthcare Settings*; (2) *NIOSH List of Hazardous Drugs in Healthcare Settings,* and (3) *Managing Hazardous Drug Exposures: Information for Healthcare Settings*.

The *Procedures for Developing the NIOSH List of Hazardous Drugs in Healthcare Settings* (*Procedures*) establish the NIOSH definition of a hazardous drug and a methodology for evaluating chemical properties, pre-clinical information, and available clinical information about each drug. The *Procedures* also clarify how

interested parties can ask NIOSH to reevaluate a determination to place or not to place a drug on the *NIOSH List of Hazardous Drugs in Healthcare Settings,* or a decision to place a drug on a particular table of the *NIOSH List of Hazardous Drugs in Healthcare Settings*.

The *NIOSH List of Hazardous Drugs in Healthcare Settings* (*List*) assists employers in providing safe and healthy workplaces by identifying drugs approved by the Food and Drug Administration (FDA) Center for Drug Evaluation and Research (CDER) that meet the NIOSH definition of a hazardous drug and that may pose hazards to healthcare workers who handle, prepare, dispense, administer, or dispose of these drugs. In accordance with the *Procedures,* NIOSH's approach to evaluating information relevant to making determinations about placing drugs on the *List,* excluding drugs from the *List,* and removing drugs from the *List,* includes the following:

(1) regularly monitoring FDA databases to identify drugs that have the potential to meet the NIOSH definition of a hazardous drug;

(2) reviewing molecular properties and information in the manufacturer-provided drug package insert for each identified drug;

(3) assessing, integrating, and synthesizing evidence from human, animal, and in vitro studies of drug toxicity for each identified drug; and

(4) evaluating the totality of the evidence regarding the molecular properties and toxicity using the hazard characterization criteria in Sec. IV.C. of the *Procedures*.

The *List* creates no legal obligation for employers; it is advisory in nature and informational in content.

Managing Hazardous Drug Exposures: Information for Healthcare Settings (Managing Exposures) offers guidance to healthcare facilities regarding occupational exposure and risk assessments, risk management plans, waste and spill control, and control approaches for the safe handling of hazardous drugs by activity and formulation. *Managing Exposures* builds upon previous work by NIOSH including *NIOSH ALERT: Preventing Occupational Exposures to Antineoplastic and Other Hazardous Drugs* and the table *Personal Protective Equipment and Engineering Controls for Working with Hazardous Drugs in Healthcare Settings* (often referred to as ''Table 5''), published in previous iterations of the *List. Managing Exposures* creates no legal obligation for employers; it is advisory in nature and informational in content.

The public was invited to submit written comments regarding the three draft 2020 versions of these three documents, as well as views, opinions, recommendations, and/or data on any topic related to the drugs reviewed by NIOSH for possible placement on the *List*.

In addition, NIOSH invited comments specifically related to the following question and statement associated with this activity:

1. Which unique ingredient identifier is the most useful for users of the *List*?

2. Because there is conflicting evidence about the hazard posed by botulinum toxins to the workers who handle these drugs, NIOSH is not proposing the placement of botulinum toxins on the *List* at this time and invites additional studies, data, and expert opinions pertinent to this issue in order to evaluate the botulinum toxins more fully.

The public comment period for the May 2020 notice was initially open until June 30, 2020 (85 FR 25439), and later extended until July 30, 2020 (85 FR 37101), to ensure commenters had adequate time to comment.

One hundred thirty-two submissions were received from commenters in Docket CDC–2020–0046 (NIOSH–233–C). Commenters consisted of nurses; pharmacists; safety personnel; a veterinarian; healthcare, business, and government administrators and committees; and anonymous and unaffiliated individuals. The commenters represented a wide range of institutions, including academic and general medical centers and healthcare systems; hospital, commercial drug store, and compounding pharmacies; manufacturers of pharmaceuticals and medical devices; professional healthcare and veterinary organizations and associations; home infusion organizations; suppliers of cleanroom products; boards of pharmacy; and consultant companies for healthcare improvement and the performance of healthcare facilities, risk assessment, and waste management. Public comments on the documents discussed in the May 2020 notice are available for review at *www.regulations.gov* (Docket CDC–2020–0046). NIOSH also conducted a peer review, with four independent reviewers, of the draft *Managing Exposures Drug Exposures: Information for Healthcare Settings*.

NIOSH carefully considered all public comments and peer reviews resulting from the 2020 notice and determined that some clarifications and changes should be made to the draft *Procedures, List,* and the *Managing Exposures* documents. These changes are reflected in the two final documents described in this notice. Publication of the *NIOSH List of Hazardous Drugs in Healthcare Settings, 2023* (2023 *List*) will be announced in a forthcoming **Federal Register** notice. The 2023 *List* is not discussed further in this notice.

Public comments on the draft *Procedures* are summarized and answered by NIOSH in Sec. III of this notice and significant peer review and public comments on *Managing Exposures* are summarized and answered in Sec. IV. The changes to both documents are summarized in Sec. V.

Final versions of the *Procedures* document [1] and *Managing Exposures* are available on the NIOSH website and in the docket for this activity.[2]

II. Background

In 2004, NIOSH published the *NIOSH Alert: Preventing Occupational Exposures to Antineoplastic and Other Hazardous Drugs in Health Care Settings (Alert),* which contained a compilation of lists of drugs considered to be as hazardous to workers' health. NIOSH periodically updates this list, now named the *NIOSH List of Hazardous Drugs in Healthcare Settings,* to assist employers in providing safe and healthful workplaces by identifying drugs that meet the NIOSH definition of a hazardous drug.

In 2017, NIOSH began developing a document to make the process used to guide the addition of hazardous drugs to the *List* more transparent, entitled the *Policy and Procedures for Developing the NIOSH List of Antineoplastic and Other Hazardous Drug in Healthcare Settings (Policy and Procedures)*. The *Policy and Procedures* document was created to formalize NIOSH's methodology and establish a process for requesting the addition of a drug to, the removal of a drug from, or relocation of a drug within the *List*. This document was reviewed by four peer reviewers and eight interested parties before NIOSH made the document available for public comment in a February 14, 2018

[1] NIOSH [2023]. *Procedures for Developing the NIOSH List of Hazardous Drugs in Healthcare Settings*. By Whittaker C, Ovesen JL, MacKenzie BA, Hartley T, Berry KA, Piacentino J. Cincinnati, OH: U.S. Department of Health and Human Services, Centers for Disease Control and Prevention, National Institute for Occupational Safety and Health, DHHS (NIOSH) Publication Number 2023–129, *https://wcms-wp.cdc.gov/niosh/docs/2023-129/default.html*.

[2] NIOSH [2023]. *Managing Hazardous Drug Exposures: Information for Healthcare Settings*. By Hodson L, Ovesen J, Couch J, Hirst D, Lawson C, Lentz TJ, MacKenzie B, Mead K. Cincinnati, OH: U.S. Department of Health and Human Services, Centers for Disease Control and Prevention, National Institute for Occupational Safety and Health, DHHS (NIOSH) Publication 2023–130, *https://wcms-wp.cdc.gov/niosh/docs/2023-130/default.html*.

notice (83 FR 6563). The peer reviewers and interested parties also provided input on the drugs considered for placement on the *List*.

Consistent with the draft *Policy and Procedures,* NIOSH proposed the addition of 20 drugs and one class of drugs to the *List* in the framework for the draft *List* in the February 2018 notice. Public comments were invited regarding any topic related to drugs identified in the notice, the draft *Policy and Procedures,* and the framework for the February 2018 update to the *List,* as well as the following questions related to this activity:

1. Has NIOSH appropriately identified and categorized the drugs considered for placement on the *NIOSH List of Antineoplastic and Other Hazardous Drugs in Healthcare Settings,* 2018?
2. Is information available from FDA or other Federal agencies or in the published, peer-reviewed scientific literature about a specific drug or drugs identified in this notice that would justify the reconsideration of NIOSH's categorization decision?
3. Does the draft *Policy and Procedures for Developing the NIOSH List of Antineoplastic and Other Hazardous Drugs in Healthcare Settings* include a methodology for reviewing toxicity information that is appropriate for this activity?

Fifty-five public comments were submitted in response to the February 2018 notice and summarized with NIOSH responses in a May 2020 notice (85 FR 25439). Those comments are available in Docket CDC–2018–0004. The substantive input provided by peer reviewers, interested parties, and public commenters on the February 2018 notice caused NIOSH to reconsider certain aspects of the draft *Policy and Procedures* and the draft framework for the *List*. As a result, NIOSH revised and updated the draft *Policy and Procedures,* renamed ''*Procedures,*'' as well as the draft list of drugs proposed for placement on the *List*. This collective input also contributed to the development of the draft document *Managing Exposures,* also announced in the May 2020 notice. Comments resulting from the May 2020 notice are available at *www.regulations.gov* in Docket CDC–2020–0046.

III. Procedures for Developing the NIOSH List of Hazardous Drugs in Healthcare Settings

The public comments submitted in response to the May 2020 version of the draft *Procedures* have been organized in accordance with the sections of the *Procedures* document. Substantive public comments are summarized below, followed by NIOSH responses. Sec. I of the *Procedures* addresses the statutory authority for this activity; no public comments were received on this section, therefore Sec. I is not discussed below.

A. Section II. Purposes

1. Application to Occupational Settings

Public comment: One commenter suggested that NIOSH make it clear that the hazardous drug designations apply to occupational exposure rather than patient use. The concern was for pharmacies adding warning labels that patients may receive.

NIOSH response: NIOSH states throughout all three documents that they are intended to address occupational exposures, not patient use. NIOSH does not require specific labeling, nor can NIOSH control how individual facilities implement their risk management processes to protect workers. No change to the *Procedures* has been made in response to this comment.

2. Coordination With U.S. Pharmacopeia (USP)

Public comment: Several commenters reflected on USP General Chapter <800> *Hazardous Drugs—Handling in Healthcare Settings* (USP <800>) [3] and how USP and NIOSH documents interrelate. USP has incorporated the NIOSH *List* into USP <800> and some states require compliance with USP <800>, the effect of which has been that certain healthcare settings in some jurisdictions are required to handle NIOSH-identified hazardous drugs in accordance with the standards in USP <800>.

Some commenters suggested close coordination of NIOSH and USP on the issues of hazardous drugs handling, as well as standardizing the language. Two commenters suggested that NIOSH specifically reference USP in its documents. A few commenters noted that compliance with USP <800> is burdensome if a drug is identified as hazardous. One commenter suggested dropping the descriptor ''antineoplastic'' from both USP and NIOSH documents as uninformative, acknowledging that cancer treatment drugs now have a wide variety of modes of action. Another commenter suggested limiting the scope of the hazardous drugs *List* to chemicals for which NIOSH had ''definitive proof'' of hazard because USP recommendations for application of the *List* may lead to overuse of personal protective equipment (PPE).

NIOSH response: While NIOSH and USP have continuing contact and stay informed of progress and potential areas of conflict in their respective documents, the respective missions of NIOSH and USP differ, and the NIOSH and USP document processes also differ. Therefore, standardized language, while convenient for the reader, may not be attainable. NIOSH works to ensure that the *List* and associated documents are consistent with relevant sources of information and guidance, including USP. However, the *List* is informational in nature and does not confer any requirements or legal obligations on users. Additionally, NIOSH does not specifically reference USP <800> in its *Procedures* and *List* documents because NIOSH intends the *List* and associated documents as stand-alone informational materials for employers in healthcare settings. NIOSH has also removed some references to USP from the *Managing Exposures* document, as discussed further below.

Regarding the descriptor ''antineoplastic,'' NIOSH agrees with the commenter that it is no longer useful for understanding the hazards posed by individual drugs and has dropped that nomenclature from the document title and table titles in the *List*.

Finally, NIOSH does not agree with the suggestion to limit the *List* to drugs for which there is ''definitive proof'' of hazard. NIOSH evaluates the evidence of toxicity to determine the potential for the drug to be hazardous to workers. This analysis does not consider dosage form (the physical form of the pharmaceutical drug, *e.g.,* coated tablet, capsule, liquid). Therefore, it is incumbent on employers in healthcare settings to evaluate how drugs are used in their facilities and what risks may ensue, given the dosage forms, procedures, and tasks undertaken. This is called a ''site risk assessment'' and is described further in *Managing Exposures*.

For questions or concerns about the implementation of USP <800>, commenters should contact USP directly.

Public comment: One commenter stated, ''. . . the explicit use of the NIOSH *List* by USP to enforce Chapter <800> makes the *List* regulatory. Facilities that do not comply with USP Chapter <800> standards, and thus the NIOSH *List* designation of hazardous drugs, can be cited and face regulatory and legal consequences.''

NIOSH response: NIOSH did not compile the *List* for standardized compliance purposes and the *List* creates no legal obligation for employers. The *List* is an advisory statement. NIOSH does not have statutory authority to enforce the

[3] *See https://www.usp.org/compounding/general-chapter-hazardous-drugs-handling-healthcare.*

recommendations comprising the *List* and companion *Managing Exposures*.

Moreover, the *List* is intended to be a helpful reference tool for use in employers' own workplace assessments. As detailed in the *Procedures,* compilation of the *List* is a hazard identification process in which NIOSH considers the inherent hazard of the drug. As such, the *List* is intended solely as a first step for employers in conducting their own assessments of hazardous drug risks to their particular workers that might result from myriad drug formulations and exposure scenarios.

Additionally, NIOSH has no ability to direct USP or the State and local jurisdictions that have incorporated USP <800> into their own requirements. While NIOSH has no control over USP <800>, NIOSH has relayed commenters' concerns to the organization. No change to the *Procedures* has been made in response to this comment.

B. Section III. Background

1. Exposure to Drugs in Healthcare Settings

Public comment: One commenter expressed concern that NIOSH did not consider the impact of hazardous drugs on cleaning staff. Another requested that NIOSH explicitly state that this applied to all pharmacies, including compounding pharmacies and mail-order pharmacies.

NIOSH response: NIOSH considers all workers who come into contact with hazardous drugs in healthcare settings as within the scope of the *Procedures, List,* and *Managing Exposures* documents, no matter the type of workplace. Accordingly, Sec. III.A of the *Procedures* addresses the tasks that workers undertake (*e.g.,* receipt, storage, preparation, compounding, manipulation, cleanup, and disposal of drugs and patient waste), rather than specific types of facilities. No change to the *Procedures* has been made in response to this comment.

C. Section IV. NIOSH Definition of a Hazardous Drug

Public comment: NIOSH received many comments on the NIOSH definition of hazardous drugs in Sec. IV of the draft *Procedures*. Specifically, many comments were received from parties that did not approve of the change in definition from previous versions of the *Procedures*. There were several issues raised objecting to the changes. Some public commenters and one *Managing Exposures* peer reviewer objected to NIOSH changing the hazardous drugs definition from the original 2004 definition of a hazardous drug, alleging that NIOSH made the change in its definition without the consensus of all interested parties. (Note: the *Managing Exposures* peer review comment is addressed in this section because it relates to the hazardous drugs definition in the *Procedures* document.)

Other commenters objected to specific wording changes in the definition. Some of these commenters objected to language that specifies how NIOSH considers drugs with high molecular weight, citing the potential for increased risks to workers. However, there was also some support among commenters for the NIOSH perspective, including one commenter who noted ''. . . the procedure should be refined from a system that focuses primarily on the intrinsic hazards of a drug to one that considers the occupational relevance of the intrinsic hazard.'' Commenters also objected to language indicating that NIOSH was limiting consideration of drugs to those approved by FDA CDER. These commenters recommended that, in addition to FDA CDER approval, NIOSH also fully consider all drugs approved by FDA Center for Biologics Evaluation and Research (CBER) to assess all potentially hazardous drugs in the workplace more fully. Other commenters disapproved of how NIOSH intended to consider drugs with insufficient toxicity data as not meeting the NIOSH definition of hazardous drugs. They recommended that NIOSH consider to be hazardous any drugs with insufficient toxicity data to meet the definition of hazardous drugs.

NIOSH response: The original 2004 definition of hazardous drug was based on an American Society of Health-System Pharmacists (ASHP) definition developed in 1990 and revised by NIOSH in collaboration with a large group of interested parties. NIOSH has used that definition as the basis for the *List* since 2004. In the *Policy and Procedures* described in the February 2018 notice, NIOSH proposed revising the definition to ''those drugs approved for use in humans by the FDA, not otherwise regulated by the U.S. Nuclear Regulatory Commission and either contains special handling information for workers handling the drug in the package insert or exhibits one of the six toxicity criteria.'' In the revised *Procedures* described in the May 2020 notice, NIOSH proposed further revisions, such as specifying drugs approved by FDA CDER. In addition, the definition included evaluating molecular properties that may limit the potential for adverse health effects for the exposed worker.

NIOSH notes that the definition in the final *Procedures* is still based largely on the 2004 definition. The *Procedures* document makes explicit the steps in evaluating the drugs that were not fully described in earlier versions of the *List,* although they have been NIOSH's long-standing practices. Except for considering molecular properties of drugs, the definition in the *Procedures* reflects how NIOSH has been implementing the 2004 definition to make decisions about hazardous drugs. Therefore, NIOSH did not consider it necessary to engage a large group of interested parties to make minor changes in the definition as the underlying foundation of the definition remains the same. In addition, NIOSH believed that the peer review and public comment processes provided ample opportunity for such interested parties to provide input on the changes to the definition.

Since the inception of the *List* in 2004, NIOSH practice is to only consider drugs approved by CDER to be included in the *List*. Therefore, to be transparent, one change from the 2004 definition includes the clarification that only FDA CDER-approved drugs are considered for the *List*. Drugs on the *List* that had been approved by CBER were part of the initial compilation of lists only; however, no drugs have been added to the *List* in intervening years that were subject to CBER approval. In addition to adopting the new language to the definition of ''hazardous drug'' in the final version of the *Procedures* Sec. IV, NIOSH has also added the language to footnote 12 to clarify that only CDER-approved drugs are included on the 2023 *List*. Similarly, it has not been a NIOSH practice to consider drugs approved by the Nuclear Regulatory Commission and this is also specified in the definition in the *Procedures*.

The six toxicity endpoints—carcinogenicity; teratogenicity or other developmental toxicity; reproductive toxicity; organ toxicity at low dose; genotoxicity; and structure and activity profiles of drugs that mimic existing drugs determined hazardous by the above criteria—in the definition of a hazardous drug remain unchanged from 2004. However, one caveat was added to the definition to clarify that a drug may be found not to be a hazard if it also exhibits a molecular property that may limit the potential for adverse health effects from exposure in healthcare workers. Such molecular properties typically include chemical, physical, and structural properties that affect the drug's absorption, (*e.g.,* chemical structure, molecular weight, or mass).

NIOSH has always emphasized that identification of potential hazards does not equate to occupational risks. In the 2004 *Alert,* NIOSH stated that drugs may be hazardous in one exposure scenario but have much less risk associated with another. Specifically, NIOSH noted in 2004 that ''Physical characteristics of the agents (such as liquid versus solid, or water versus lipid solubility) also need to be considered in determining the potential for occupational exposure. Therefore, the caveat inserted into the current hazardous drugs definition clarifies and extends that consideration for specific scenarios. It recognizes that although a drug may meet the definition of a hazardous drug in other ways, if NIOSH determines that occupational risks are not significant because of the chemical and physical properties of the drug, that drug may be excluded from the *List*. The purpose of this exclusion is to focus the *List* on drugs that have a reasonable potential for toxicity after occupational exposure, so that workers' attention is focused on drugs that are likely to be hazardous in occupational settings. It is important to note that this is not an automatic exclusion. NIOSH has not established a specific molecular weight, for example, above which drugs are automatically excluded from the *List*. Instead, this is a guideline to alert NIOSH reviewers that they should look at the totality of the evidence, thoroughly consider the possible occupational exposure scenarios, and evaluate whether there is significant risk under those conditions. This would include assessing exposure by inhalation of dust, vapor or mist, dermal absorption (including through abraded or compromised skin), ingestion, contact with mucous membranes, and needle sticks (using ''worst case'' assumptions). This exclusion also does not apply to the dosage form of the drug. Specifically, the *Procedures* notes in Sec. V.C.4.b,

> NIOSH does not consider dosage form as a molecular property of a drug because the same active pharmaceutical product can be offered in several different dosage forms, new dosage forms can be offered later, and some dosage forms can be discontinued.

NIOSH has considered the public comments and remains supportive of the idea of examining molecular properties of drugs as a consideration of whether they should be included on the *List*. In addition, NIOSH has added a column to the tables that allows for identification of those drugs approved by CDER under a biologics license application. Unlike the biological products approved by CBER, those approved by CDER are often large, single-molecule protein/peptide-based drugs such as monoclonal antibodies, intended for therapeutic use.[4] Denoting these drugs in the *List* will make it easier for users to identify drugs that are large, single-molecule products and peptides in order to implement the appropriate risk management strategies. In Sec. IV of the *Procedures,* the final NIOSH definition of hazardous drug is a drug that is:

A. Approved for use in humans [a] by the Food and Drug Administration's (FDA) Center for Drug Evaluation and Research (CDER),[b]

B. Not otherwise regulated by the U.S. Nuclear Regulatory Commission,[c] and

C. Either

1. Is accompanied by prescribing information in the ''package insert'' [d] that includes a manufacturer's special handling information (MSHI),[e] or

2. Is determined to be a carcinogenic hazard, developmental hazard, reproductive hazard, genotoxic hazard, or other health hazard by exhibiting one or more of the following toxicity criteria in humans, animal models, or in vitro systems:

- Carcinogenicity;
- Developmental toxicity (including teratogenicity);
- Reproductive toxicity;
- Genotoxicity;
- Organ toxicity at low doses; [f] or a
- Structure and toxicity profile that mimics existing drugs determined hazardous by exhibiting any one of the previous five toxicity types.[g]

However, if a drug also exhibits a molecular property [h] that may limit the potential for adverse health effects from exposure to the drug in healthcare workers, it may be determined it is not a hazard.

[a] Although only drugs approved by FDA for use in humans are included in the definition of hazardous drug, some of those drugs may be used in veterinary settings for treatment of animals and may be a hazard for veterinary care workers.

[b] Although biological products, such as vaccines, blood and blood components, allergenics, somatic cells, gene therapy, tissues, recombinant therapeutic proteins, are included in FDA definition of a drug, they are not included in the drugs that NIOSH evaluates for potential inclusion on the *List* because they are approved for use by FDA's Center for Biologic Evaluation and Research (CBER), not by FDA's CDER. This provision makes clear NIOSH's long-standing practice of only considering drugs approved by FDA CDER.

[c] 10 CFR parts 19, 20, and 35. *See https://www.nrc.gov/materials/miau/med-use.html*. Drugs regulated by the Nuclear Regulatory Commission are not included on the *List*.

[d] *See* Drug Advertising: A Glossary of Terms at *https://www.fda.gov/drugs/resourcesforyou/consumers/prescriptiondrugadvertising/ucm072025.htm*. ''Prescribing information is also called product information, product labeling, or the package insert (''the PI''). It is generally drafted by the drug company and approved by FDA. This information travels with a drug as it moves from the company to the pharmacist. It includes the details and directions healthcare providers need to prescribe the drug properly. It is also the basis for how the drug company can advertise its drug. The prescribing information includes such details about the drug as: its chemical description; how it works; how it interacts with other drugs, supplements, foods, and beverages; what condition(s) or disease(s) it treats; who should not use the drug; serious side effects, even if they occur rarely; commonly occurring side effects, even if they are not serious; effects on specific groups of patients, such as children, pregnant women, or older adults and how to use it in these populations.''

[e] MSHI includes language that informs those handling the drug of the need to follow heightened handling and disposal procedures. For example, language such as ''follow special handling and disposal procedures'' or ''procedures for proper handling and disposal of anticancer drugs should be considered'' is frequently used in package inserts. However, NIOSH does not consider language pertaining to packaging and temperature controls as MSHI.

[f] All drugs have toxic side effects, but some exhibit toxicity at low doses. The level of toxicity reflects a continuum from relatively nontoxic to production of toxic effects in patients at low doses (for example, a few milligrams or less). For example, a daily therapeutic dose of 10 milligrams per day (mg/day) or a dose of 1 milligram per kilogram (mg/kg) per day in laboratory animals that produces serious organ toxicity, developmental toxicity, or reproductive toxicity has been used by the pharmaceutical industry to develop occupational exposure limits (OELs) of less than 10 micrograms per cubic meter (μg/m3) after applying appropriate uncertainty factors. See Naumann BD, Sargent EV [1997]. Setting occupational exposure limits for pharmaceuticals. Occup Med 12(1):67–80; Sargent EV, Kirk GD [1988]. Establishing airborne exposure control limits in the pharmaceutical industry airborne exposure control limits in the pharmaceutical industry, Am Ind Hyg Assoc J 49(6):309–313; Sargent EV, Naumann BD, Dolan DG, Faria EC, Schulman L [2002]. The importance of human data in the establishment of occupational exposure limits. Hum Ecol Risk Assess 8(4):805–822]. OELs in this range are typically established for potent or toxic drugs in the pharmaceutical industry.

[g] NIOSH [2004]. NIOSH Alert: preventing occupational exposures to antineoplastic and other hazardous drugs in healthcare settings. By Burroughs GE, Connor TH, McDiarmid MA, Mead KR, Power LA, Reed LD, Coyle BJ, Hammond DR, Leone MM, Polovich M, Sharpnack DD. Cincinnati, OH: U.S. Department of Health and Human Services, Centers for Disease Control and Prevention, National Institute for Occupational Safety

[4] *See* FDA, *Transfer of Therapeutic Biological Products to the Center for Drug Evaluation and Research. https://www.fda.gov/combination-products/jurisdictional-information/transfer-therapeutic-biological-products-center-drug-evaluation-and-research.*

and Health, DHHS (NIOSH) Publication No. 2004–165, available at *https://www.cdc.gov/niosh/docs/2004-165/*.

[h] Properties of a drug molecule that may limit adverse effects in healthcare workers are typically chemical, physical, and structural properties that affect its absorption (ability to enter the cells of the body), *e.g.,* chemical structure, molecular weight, or mass. *See* Clementi F, Fumagalli G [2015]. Molecular pharmacology. Hoboken, NJ: Wiley & Sons; Di L, Kerns EH [2016]. Drug-like properties: concepts, structure, design, and methods. Oxford, UK: Elsevier; Mattson P, Kihlberg J [2017]. How big is too big for cell permeability? J Med Chem *60*(5):1662–1664, *https://doi.org/10.1021/acs.jmedchem.7b00237*.

1. Investigational Drugs

Public comment: Two commenters remarked on the exclusion of investigational new drugs from the definition of ''hazardous drug'' in Sec. IV. One commenter sought guidance in how to handle those drugs, while the second commenter supported the idea that drugs with inadequate safety information not be automatically added to the *List*.

NIOSH response: Although the NIOSH *Procedures* are focused on drugs that have received FDA CDER approval, and do not consider investigational drugs, NIOSH has addressed this issue in the document *Managing Exposures*. Guidance for employers developing a facility-specific hazardous drug list is found in Ch. 3, Sec. 3.1 of that document, Developing a Facility-Specific Hazardous Drug List, which now states:

> Toxicological data may be incomplete or unavailable for some drugs, specifically investigational drugs. Until adequate information becomes available, it is prudent to handle investigational drugs as hazardous if the mechanism of action suggests that there may be a concern.

2. Over-the-Counter Drugs

Public comment: One commenter indicated that it was unclear why over-the-counter drugs were excluded from the definition of a hazardous drug in Sec. IV of the *Procedures*.

NIOSH response: Over-the-counter (OTC) drugs are not evaluated by NIOSH because FDA regulations at 21 CFR 330.10 require OTC drugs to meet a safety standard that includes:

> . . . a low incidence of adverse reactions or significant side effects under adequate directions for use and warnings against unsafe use as well as low potential for harm which may result from abuse under conditions of widespread availability.[5]

NIOSH acknowledges that this does not mean these drugs are always safe and there are circumstances under which there may be risks to workers who handle OTC drugs. However, to focus resources on the most hazardous drugs, NIOSH has decided to exclude drugs with an OTC form from consideration for the *List*. No change to the *Procedures* has been made in response to this comment.

3. Veterinary Drugs

Public comment: One commenter on the *List* requested that NIOSH consider including veterinary drugs in the *List* because these drugs are often approved first for veterinary uses and later approved for human therapies.

NIOSH response: At this time the *List* is compiled from drugs approved by CDER. The veterinary drugs prescribing insert often does not include information about the toxicity criteria that NIOSH considers. NIOSH may consider developing further resources related to the handling of drugs approved by the FDA Center for Veterinary Medicine in the future. No change to the *Procedures* has been made in response to this comment.

D. Section V. Identifying, Screening, Evaluating, and Reviewing a Drug for Placement on the List

1. Section V.A. Step 1: Identifying Potentially Hazardous Drugs

Public comment: One commenter was concerned that the NIOSH *List* might be inconsistent with FDA labeling requirements, specifically questioning whether NIOSH is considering individual branded product labeling and how the criteria for carcinogenicity are applied when the information is derived from the package insert.

NIOSH response: In developing the *List,* NIOSH considers the toxicity of the drug, not a specific brand or dosage form. Regarding the concerns about how the information on the package insert is used to support a carcinogenicity determination, NIOSH notes that a mention of tumors or malignancies does not automatically result in a NIOSH determination that there is an occupational cancer hazard in handling the drug. NIOSH takes all the available information into consideration including therapeutic dose, carcinogenic dose in any animal studies, and other factors in making its determination. Mention of carcinogenicity on a package insert is insufficient to automatically meet the NIOSH criteria for carcinogenicity. No change to the *Procedures* has been made in response to this comment.

2. Section V.B. Step 2: Screening Potentially Hazardous Drugs

Public comment: Some commenters expressed concern regarding *Procedures* Sec. V.B.2.b, which describes screening outcomes when there is ''insufficient information in the drug package insert to suggest that the drug exhibits any one of the toxicity criteria in the NIOSH definition of hazardous drug.'' The text of the *Procedures* indicates that for those drugs for which NIOSH has determined that there is insufficient toxicity information to suggest that the drug exhibits any one of the toxicity criteria, NIOSH will not propose to add that drug to the *List.* Commenters were concerned that this decision would increase worker hazards. Specifically, one commenter stated, ''[w]e suggest that NIOSH consider additional parameters to ensure that any drug that could potentially pose a hazard to employees not fall through the cracks.''

NIOSH response: NIOSH understands the concern that it appears that drugs that have been insufficiently studied might be removed from consideration. However, unlike other workplace chemicals, pharmaceuticals are subject to rigorous, required toxicity testing to merit approval by FDA. NIOSH understands that there is a difference in the focus of the two agencies. NIOSH notes that the FDA-required toxicity tests, which are based on the mode of action and potential toxicity of the drug at treatment exposure levels, provide sufficient information for NIOSH to identify potential hazards at the levels of occupational exposure expected in healthcare settings. In Sec. V.B.2.b of the *Procedures,* NIOSH now states:

> If there is insufficient information in the drug package insert to suggest that the drug exhibits any one of the toxicity criteria in the NIOSH definition of hazardous drug, then NIOSH will not propose to add the drug to the *List.*

This does not mean that the drug has been insufficiently tested to determine potential toxicity. Instead, it indicates that in some cases, in its review of all available information, FDA did not find a concern for toxicity of a particular type and such tests were not required or that the available toxicity data are insufficient to meet the NIOSH criteria for a hazardous drug. NIOSH has added footnote 29 with this explanation to the *Procedures* in response to this comment.

3. Section V.C. Step 3: Evaluating Potentially Hazardous Drugs

a. Toxicity Criteria

Public comment: One commenter asked NIOSH to clarify whether drugs

[5] 21 CFR 330.10(4)(i).

are placed on the *List* solely based on in vitro studies.

NIOSH response: NIOSH examines the totality of the evidence from the specified sources described in the *Procedures.* In Sec. V.C.3.e, NIOSH specifies the use of in vitro studies in genotoxicity determinations as those toxicity tests are the most common tests for that toxicity endpoint. However, NIOSH also notes in multiple places in the *Procedures* that human data are preferred over animal data and both human and animal data are preferred over in vitro toxicity data. In Sec. V.C.3.e.(1) of the *Procedures,* regarding genotoxicity data, NIOSH states:

> Human genotoxicity studies are not commonly available for evaluation. If available, NIOSH gives preference to human genotoxicity studies over animal and in vitro studies. However, NIOSH considers all relevant information in its evaluation.

Public comment: One commenter questioned the NIOSH use of animal toxicity data and in vitro data in making a hazardous drug determination. In particular, the commenter expressed concern that the inclusion of data from animal models or in vitro systems in defining a hazardous drug may not be relevant to hazard risk in human exposure. The commenter further recommended that drugs placed on the *List* solely due to animal or in vitro toxicity data should be so identified.

NIOSH response: NIOSH notes in the *Procedures* that human data are preferred over both animal and in vitro data for making determinations about the hazardous nature of drugs. Data from animal and in vitro studies designed to predict human toxicities contain valuable information about the potential toxicity of drugs. Therefore, NIOSH fully evaluates all available relevant scientific information regarding the potential toxicity of hazardous drugs and does not separately identify which determinations have been made based solely on animal and/or in vitro data. Doing so might give an erroneous impression of less concern for certain drugs based on the type of information available.

Public comment: The same commenter was concerned that the language in Secs. V.C.3.a.(5)(c), V.C.3.b.(4)(b), and V.C.3.c.(4)(b) of the *Procedures,* regarding adverse effects observed in toxicity studies at doses near, at, or below the maximum recommended human dose, indicated that NIOSH would use such findings to support a hazardous drug determination, even when the adverse effect may not be related to a toxic effect.

NIOSH response: The language cited by the commenter is from the *Procedures* and is parallel to language in sections on carcinogenicity, reproductive toxicity, and developmental toxicity. The adverse effects observed would be those associated with the specific toxicity resulting from administration of the drug to experimental animals. The occurrence of these effects below or near the maximal recommended human dose clarify that they are occurring at a dose level of concern. In considering the potential occupational hazard, it is important for NIOSH to consider when effects occur only at doses much higher than the human therapeutic dose, as workers are unlikely to be exposed to drugs at those therapeutic dose concentrations or higher doses. NIOSH has used the maximal recommended human dose as a benchmark to indicate the high end of doses of concern. Typically, NIOSH would be most concerned with toxic effects that occurred below this level.

Public comment: One commenter stated that the toxicity criteria in Sec. V.C.3 should be clarified and further defined. According to the commenter, ''unclear terms include 'serious organ toxicity,' 'low doses,' and 'generally support.' ''

NIOSH response: While NIOSH appreciates the desire to have more explicit language in describing the toxicity criteria, the broad spectrum of drugs covered makes it difficult to precisely define the criteria in a way that will apply to both all drugs and all modes of action considered. Language that would be precise for a particular drug may create a situation where, when applied to another drug, is inadequate to protect workers or results in over-protection. The remedies for this are to either have precise language with an exhaustive list of exceptions (assuming one could know all the potential exceptions that are possible) or to provide as much indication of how NIOSH views toxicity as possible, knowing that there are exceptions that will arise. NIOSH chose the latter strategy, but notes that for any particular drug consideration, NIOSH relies on the professional judgement of NIOSH staff scientists, conducts rigorous peer review of the determinations, and provides an opportunity for public comment on how that language was applied to that drug. No changes to the *Procedures* have been made in response to this comment.

b. Developmental and Reproductive Toxicity

Public comment: Two commenters suggested that NIOSH may not want to use developmental and reproductive hazards as inclusion criteria, citing concerns that drugs contraindicated in pregnancy may be automatically included in the *List* as reproductive or developmental hazards. The commenters also stated that the risks were easily mitigated with normal drug handling procedures.

NIOSH response: The *List* is intended to identify potential hazards in the healthcare workplace so that workplaces can further consider what risk management strategies are appropriate for their specific needs. This includes, but is not limited to, reproductive and developmental hazards. Drugs that pose developmental and reproductive hazards are identified to protect workers, both male and female, who may be pregnant or trying to become pregnant.

Contraindication during pregnancy is not enough for NIOSH to consider a drug to be a developmental or reproductive hazard. *See Procedures,* Sec.V.C.3.b and c. No change to the *Procedures* has been made in response to this comment.

c. Organ Toxicity at Low Dose

Public comment: One commenter expressed concern with the language regarding low dose toxicity in Sec. V.C.3.d of the draft *Procedures.* Specifically, the commenter did not agree with the toxicity level of 10 milligrams per day (mg/day) in human adults or 1 milligram per kilogram per day (mg/kg/day) in laboratory animals as proposed by NIOSH. The commenter used the drugs clonazepam and olaparib as examples of drugs for which these criteria should not be used.

NIOSH response: NIOSH uses a dose 10 mg/day in an adult human or 1 mg/kg/day in animals as one consideration in evaluating potential hazards related specifically to organ system toxicity at low doses. NIOSH also may consider the human recommended dose as a threshold for some effects. This is because occupational exposure is expected to be lower (and therefore, less potentially hazardous) than therapeutic exposure. NIOSH does not usually use a lethality measure (LD_{50}) when assessing potential hazards. In general, if the effect of concern occurs at or below the human treatment dose, then it would likely be considered a hazardous drug. Clonazepam is on the *List* because it has developmental and reproductive effects at lower than the

maximum human recommended dosage. Olaparib is also on the *List* because of the potential reproductive and developmental hazards at less than the human dosage. Therefore, NIOSH does not agree with the commenter's recommendation and has made no change in the *Procedures.*

d. Tabular Arrangement of Hazardous Drugs on the List

Public comment: Several commenters questioned the use of manufacturer's MSHI as a criterion for placement in Table 1 of the NIOSH *List.* Table 1 contains drugs that have MSHI in the package insert and/or meet the NIOSH definition of a hazardous drug, and are classified by the National Toxicology Program (NTP) as *known to be a human carcinogen* and/or classified by the International Agency for Research on Cancer (IARC) as *carcinogenic to humans* (Group 1) or *probably carcinogenic to humans* (Group 2A). The commenters indicated that, because MSHI is not a part of the package insert required by FDA, linking the MSHI to placement on Table 1 would provide a disincentive to manufacturers to provide MSHI.

NIOSH response: The MSHI is directly relevant to worker protection from hazardous drugs and often cites the Occupational Safety and Health Administration (OSHA) hazardous drug guidance website.[6] Manufacturers have provided MSHI to alert workers to how their drug can be safely handled. By placing drugs with MSHI into Table 1, NIOSH is acknowledging and amplifying what manufacturers, who are in the best position to know the toxicity information for their drugs, have already determined to be the best way to handle their product. Manufacturers do not provide MSHI lightly and NIOSH believes it is in the manufacturers' interest to continue to provide information to protect workers handling their drugs. Accordingly, the Table 1 MSHI criterion has been retained. No change to the *Procedures* has been made in response to this comment.

Public comment: Commenters also weighed in on the carcinogen classifications by the IARC and NTP required for placement in Table 1. One commenter suggested that when drugs are identified by IARC as known human carcinogens ''only after prolonged exposure,'' NIOSH should consider moving them to Table 2 of the *List.* Table 2 contains drugs that meet the definition of a hazardous drug but do not have MSHI and are not classified as human carcinogens by NTP or IARC. The commenters also indicated that NIOSH should look carefully at the drug's mode of action when making that determination. Another commenter noted that NIOSH placed drugs that NTP classified as ''known to be carcinogenic in humans'' in Table 1 but did not do so with drugs that were classified as ''reasonably anticipated to be carcinogenic in humans.''

NIOSH response: To simplify the criteria for Table 1, NIOSH is retaining the criteria proposed in the May 2020 notice, so that ''[d]rugs that have MSHI in the package insert and/or meet the NIOSH definition of a hazardous drug and one or more of the following criteria: are classified by NTP as *known to be a human carcinogen,* or are classified by IARC as Group 1 *carcinogenic to humans* or Group 2A *probably carcinogenic to humans*'' are included in Table 1. Drugs classified by NTP as reasonably anticipated to be carcinogenic to humans are evaluated by NIOSH and may be placed on Table 2; the designation of reasonably anticipated alone is not sufficient to place a drug in Table 1. However, NIOSH acknowledges that the context of the carcinogenicity and the mode of action are important information to consider when employers are evaluating the potential risk to workers related to this hazard.

Table 2 of the *List* includes ''[d]rugs that meet the NIOSH definition of a hazardous drug and do not have MSHI, are not classified by NTP as *known to be a human carcinogen,* and are not classified by IARC as Group 1, *carcinogenic to humans,* or Group 2A, *probably carcinogenic to humans.* (Some may also have adverse developmental and/or reproductive effects.)'' Of note, Table 2 includes those drugs that meet the NIOSH definition of a hazardous drug and exhibit carcinogenicity in humans but have not been evaluated by IARC or NTP or have been classified by NTP as *reasonably anticipated to be carcinogenic to humans* or by IARC as *possibly carcinogenic to humans* (Group 2B). No change to the *Procedures* has been made in response to this comment.

4. Section V.D. Step 4: Peer Review of Potentially Hazardous Drugs and Section V.E. Step 5: Public Review of Potentially Hazardous Drugs

Public comment: One commenter stated that the process would be improved with an opportunity for manufacturers (called ''sponsors'' in some comments) to provide input early in the screening process described in Sec. V of the *Procedures.* Specifically, the commenter suggested that

> . . . NIOSH could include an additional step in the screening process of drugs being considered for inclusion on the *List.* This step would involve notifying sponsors when their drug(s) is/are being considered for inclusion on the *List.* NIOSH would then have an opportunity to request sponsor input on inclusion of specific products, and sponsors could choose to submit additional data regarding the potential hazards (or lack thereof) that could be useful to the peer review committee in their review activities.

NIOSH response: NIOSH finds the current process utilizing peer review and public comment provides ample opportunity for interested parties to participate in development of the *List.* Manufacturers (sponsors) and others are welcome to provide relevant data and information that may not be already available. In addition, there is a formal reevaluation process through which manufacturers can provide additional data for reevaluation of a drug, described in Sec. VI of the *Procedures.* NIOSH notes that, to date, interested parties have provided only limited additional toxicology information in response to publication of the draft *List* in the May 2020 notice, and much of that data was provided as part of the reevaluation process. No change to the *Procedures* has been made in response to this comment.

Public comment: One commenter indicated that the peer reviewers who reviewed the draft *Procedures* in 2018 were inadequately identified and their credentials were not clear.

NIOSH response: The peer reviewers, their credentials, and the charge to reviewers can be viewed on the NIOSH web page, Peer Review Plan for the Procedures for Developing the NIOSH List of Hazardous Drugs in Healthcare Settings, available at *https://www.cdc.gov/niosh/topics/hazdrug/peer-review-plan.html.*

IV. Managing Hazardous Drug Exposures: Information for Healthcare Settings

In addition to the *Procedures* and *List* documents, NIOSH solicited feedback on the guidance document, *Managing Hazardous Drug Exposures: Information for Healthcare Settings.* Four peer reviewers, whose names and credentials are available on the NIOSH Peer Review web page,[7] *reviewed the draft.* Public comments follow the peer review responses below, along with NIOSH responses. Overall, peer reviewers and public commenters were supportive of

[6] *See http://www.osha.gov/SLTC/hazardous drugs/index.html.*

[7] *https://www.cdc.gov/niosh/review/peer/isi/healthsafetyrisks.html.*

this new resource and offered many suggestions for its improvement.

A. Peer Review

The charge given to the peer reviewers for the *Managing Exposures* document is available on the NIOSH Peer Review web page.[8] Peer review questions are listed below with the peer reviewer responses summarized beneath each question.

Reviewers' concerns that focused on issues in other documents (for example, the definition of hazardous drugs or the organization of the tables in the *List*) are included under the NIOSH responses to comments for those documents.

1. Charge 1.a. What additional information would improve [the document's] usefulness and why?

Peer review: One peer reviewer suggested additional helpful references to ''. . . resources developed by professional organizations regarding safer handling of hazardous drugs.'' In addition, multiple reviewers suggested more extensive referencing of USP <800>.

NIOSH response: Additional links to helpful resources were added to the document. However, regarding USP <800>, NIOSH notes that many of the references circle back to NIOSH recommendations, so in those instances reference to USP <800> was not made. However, some references to USP <800> were added into the text where the recommendations were not originally from NIOSH guidance. A link to USP <800> has also been added to the document's Resources section.

2. Charge 1.b. What changes could be made to improve the utility of the information?

Peer review: One reviewer expressed concern that the definition of hazardous drug was changed without input from a much larger and international group of interested parties.

NIOSH response: This comment is addressed with the public comments received in the response to comments in Sec. II of the *Procedures* document.

Peer review: Another reviewer suggested that the information be distilled into a fact sheet or job aid to encourage implementation.

NIOSH response: NIOSH has reformatted the Table of Control Approaches for Safer Handling of Hazardous Drugs, by Activity and Formulation (Table of Control Approaches) in *Managing Exposures,* Ch. 8, to make it easy to reproduce. NIOSH is also considering the development of additional materials to summarize the information in *Managing Exposures* and help employers implement the NIOSH guidance.

3. Charge 1.c. What information is redundant, incorrect, missing, or not needed? Please Explain

Peer review: One reviewer suggested that the narrative immediately following the Table of Control Approaches did not add substantive information and could be removed.

NIOSH response: Since no other peer or public comments identified this as a problem, and in recognition that people absorb information in different ways, NIOSH has decided not to revise or remove the narrative following the table. No change to *Managing Exposures* has been made in response to this comment.

Peer review: One reviewer noted some differences between the Oncology Nursing Society (ONS) recommendations and the NIOSH recommendations in the Table of Control Approaches. These included recommendations for the use of double versus single gloves when handling manufacturer prefilled syringes and the double flushing of toilets.

NIOSH response: NIOSH reviewed the risks addressed in the ONS recommendations and adjusted the text throughout the *Managing Exposures* document as necessary, emphasizing that facilities are responsible for conducting site risk assessments and developing standard operating procedures (SOPs). The NIOSH recommendation for single gloves in handling prefilled syringes has been retained. The recommendation for flushing twice has been removed, specifying that a plastic-backed absorbent pad should be placed over toilets without lids during flushing.

Peer review: One reviewer noted that NIOSH should clarify that the controls were in descending order of effectiveness in the Table of Control Approaches.

NIOSH response: NIOSH has clarified the hierarchy of controls with additional text in Ch. 6, stating, ''[t]he controls at the top of the hierarchy are the most effective and provide the best business value.''

Peer review: The same reviewer asked whether medical surveillance was part of administrative controls.

NIOSH response: Medical surveillance is part of a comprehensive exposure control program complementing engineering controls, safe work processes (administrative controls), and use of PPE. In response to the peer reviewer's query, NIOSH has rearranged *Managing Exposures* and moved the section on medical surveillance into Ch. 6 to clarify that this consideration should be a part of the workplace's risk management plan.

4. Charge 2. Please Provide Any Additional Studies or Scientific Information That Evaluate or Validate Engineering, Work Practice, or Administrative Controls To Reduce Exposures to Hazardous Drugs in Healthcare Settings

Peer review: Reviewers commented on including references to USP <800> and provided additional links to resources and additional citations.

NIOSH response: As discussed above, links to suggested resources and suggested citations have been added to the document where appropriate.

Peer review: One reviewer requested that a citation be added regarding the insufficient protection offered by surgical masks during compounding.

NIOSH response: NIOSH agrees; this reference was included in the May 2020 notice draft *Managing Exposures. See* Ch. 6, Sec. 6.4, Personal Protective Equipment, in which NIOSH states:

> Surgical masks that are not labeled as N95 are not NIOSH-approved, do not provide respiratory protection, and should not be used to compound or administer fine powders which may result from handling hazardous drugs [citations omitted].

Peer review: Reviewers suggested specific risk mitigation strategies, such as requiring that all employees handling hazardous drugs wear PPE; having written policies to govern spill cleanup; requiring the availability of spill kits; having written policies that address medical surveillance; specifying that training should happen prior to working with hazardous drugs and annually thereafter; and that demonstrating and documenting annual competency were warranted.

NIOSH response: NIOSH recommends that workers performing any task involving hazardous drugs, including all compounding, administration, waste handling, and spill response, wear all assigned PPE to reduce the exposure and provide a barrier of protection. The recommendations on spill cleanup and spill kits, written policies on medical surveillance, training prior to working with hazardous drugs, and competency being determined and documented have been added to *Managing Exposures.*

[8] *Id.*

5. Charge 3. Please Provide Any Additional Studies or Scientific Information That Support or Validate the Use of the NIOSH Recommended Control Strategies or Alternative Strategies To Control Exposures to Hazardous Drugs

Peer review: One reviewer suggested including a reference on spills and PPE use and another on the hierarchy of controls and PPE use.

NIOSH response: In response to the peer reviewer, NIOSH has added references to *Managing Exposures* to support the use of the hierarchy of controls when PPE is inconsistently used (Friese *et al.* 2011) [9] and during spill response (Friese *et al.* 2020) [10] were added to document.

6. Charge 4. Please Provide Any Additional Studies or Scientific Information That Support or Validate Evidence-Based Strategies or Approaches for Controlling Exposures to Hazardous Drugs That Are Different From Those That NIOSH Has Proposed

Peer review: Reviewers suggested language clarifications and additional references for NIOSH consideration.

NIOSH response: NIOSH agrees with many of the suggestions and references offered by peer reviewers and has revised the final *Managing Exposures* accordingly.

Peer review: Reviewers questioned the location and composition of the recommendations for medical surveillance.

NIOSH response: As discussed above, in response to the peer reviewer, the topic of medical surveillance was moved into Ch. 6, Risk Management Plan. Medical surveillance should be included as a part of a comprehensive exposure control program to protect the health of workers. This section now includes the following recommendation:

Elements of a medical surveillance program for workers exposed to hazardous drugs should include the following:

- Consideration of a baseline clinical evaluation to allow for an individualized point of comparison should adverse health effects of exposure to hazardous drugs be suspected in the future. Whether a worker should undergo baseline clinical evaluation should be based on the availability of clinical examinations and tests which can be targeted toward specific hazardous drugs and health endpoints, as well as their corresponding performance characteristics, such as sensitivity, specificity, and predictive value. If a baseline clinical evaluation is performed, it can include a targeted (1) medical history, (2) physical examination, and (3) laboratory testing. Selection of baseline evaluation components should be informed by the toxicities of the hazardous drugs to be handled.
- Health questionnaires administered by a healthcare professional at the time of hire and periodically. The questionnaires should include information about relevant symptoms and medical events. Reproductive outcomes such as miscarriage should be included whenever anticipated as an adverse outcome of hazardous drug exposure because their occurrence may go unreported.
- History of drug handling as an estimate of prior and current exposure, including dates of duty assignment related to hazardous drugs and similar types of information.
- A follow-up plan, as needed, for workers who have had health changes suggesting toxicity or have experienced acute exposure (for example, from substantial skin contact or inhalation or from cleaning a large spill [a broken IV bag, leaking IV line, etc.]) [citation omitted].

Peer review: One reviewer suggested a reference describing controls in urological procedures.

NIOSH response: This reference has not been included because NIOSH determined it is a general paper and does not address specific worker exposure from the medical procedure, bladder installation. No change to *Managing Exposures* has been made in response to this comment.

7. Charge 5.a. What additional information would improve the usefulness of [the Table of Control Approaches in Chapter 8] and why?

Peer review: One reviewer suggested adding a statement indicating that compounding and manipulating oral hazardous drugs should be done in a compounding area, and not a patient care area, and to alert medical personnel of the hazards.

NIOSH response: NIOSH has provided separate recommendations for compounding and administering in the Table of Control Approaches. It would be impractical to try to identify all actions that would fall under a ''do not do this'' recommendation. No change to *Managing Exposures* has been made in response to this comment.

Peer review: Another reviewer mentioned that a job aid or standard operating procedure would be of particular help associated with the Table of Control Approaches.

NIOSH response: The Table of Control Approaches is meant to stand alone without a standard operating procedure. NIOSH is developing a shorter fact sheet to assist employers. No change to *Managing Exposures* has been made in response to this comment.

8. Charge 5.b. What structural or format changes could be made to improve the utility of [the Table of Control Approaches]?

Peer review: Two reviewers noted that the format of the Table of Control Approaches should be considered for potential use as a stand-alone document and maximized for searching online.

NIOSH response: NIOSH agrees and has developed the final Table of Control Approaches with those considerations in mind.

9. Charge 5.c. What information is redundant, incorrect, missing, or not needed [in the Table of Control Approaches]? Please Explain

Peer review: One reviewer suggested reference to the 2018 Oncology Nursing Society's Safe Handling of Hazardous Drugs, 3rd edition (ONS 2018) as an additional resource for exposure control approaches and recommended a specific control strategy when attaching needles to closed system transfer devices (CSTDs). The same reviewer mentioned that double flushing was no longer recommended.

NIOSH response: NIOSH agrees and has added a citation to ONS 2018 to provide an additional resource for exposure control strategies. NIOSH has also included a link to a NIOSH topic page on CSTDs to further describe the appropriate controls needed when using CSTDs. The suggested revision, however, is too specific for this general recommendation document. NIOSH concurs that double flushing was not recommended and has revised the document to update the recommendations.

Peer review: Another reviewer stated that the content of the Table of Control Approaches was overwhelming and suggested a bullet point summary. The reviewer also suggested linking to the USP Reference Standards Mobile App.

NIOSH response: NIOSH is developing a shorter fact sheet to present a summary of the information. A reference to USP <800> has been added to the document's Resources section. However, NIOSH has not provided a link to a for-purchase product.

[9] Friese CR, Himes-Ferris L, Frasier MN, McCullagh MC, Griggs JJ [2011]. *Structures and Processes of Care in Ambulatory Oncology Settings and Nurse-Reported Exposure to Chemotherapy.* BMJ Qual Saf. 21(9):753–759.

[10] Friese CR, Wong M, Fauer A, Mendelsohn-Victor K, Polovich M, McCullagh MC [2020]. *Hazardous Drug Exposure: Case Report Analysis from a Prospective, Multisite Study of Oncology Nurses' Exposure in Ambulatory Settings.* Clin J Oncol Nurs. 24(3):249–255.

10. Charge 6. What improvements could be made to this risk management information to make it more useful to employers and healthcare workers? Please Provide Specific Examples

Peer review: Two reviewers suggested that NIOSH recommend alternative duty for pregnant women or individuals trying to conceive to further reduce potential worker risks and advocated expanding the Medical Surveillance section with specific requirements.

NIOSH response: NIOSH has determined that the employer is in the best position to ascertain the utility and feasibility of alternative duty as a control strategy in their workplace. As discussed above, the components and timing of medical surveillance should be determined by the licensed healthcare professional conducting the medical evaluation. No change to *Managing Exposures* has been made in response to this comment.

Peer review: Another reviewer suggested visual abstracts and graphics to better convey concepts and summarize key points referenced in a 2019 study by Friese *et al.,* entitled *Randomized Controlled Trial of an Intervention to Improve Nurses' Hazardous Drug Handling,* published in the Oncology Nursing Forum.[11]

NIOSH response: The visual aspect of Friese *et al.* 2019 is inspiring. NIOSH is considering reviewing the documents to look for opportunities to create shorter fact sheets with meaningful graphics to improve understanding. In addition, a NIOSH visual communication team has worked to make the Table of Control Approaches in the *Managing Exposures* document easier to read and reproduce.

Peer review: One reviewer suggested adding a section on home veterinary care, recommending information from a specific reference.

NIOSH response: The NIOSH document is geared towards employees in healthcare settings, including veterinarians and veterinary staff, but not pet owners doing home veterinary care. However, the veterinary resource suggested was a ''consensus opinion'' about protecting both veterinary workers and owners so it was added to the document's Resources section.

11. Charge 7. Please Provide Information About Your Professional Experience, if Any, of Implementing Control Strategies for Exposures to Hazardous Drugs in Healthcare or Similar Settings. Please Describe What You Found to Be Most or Least Effective and Why. Include Relevant Publications if Available

Peer review: One reviewer indicated that there is a need for increased signage for all staff, family, and visitors in contact with patients receiving hazardous drugs. References were suggested outlining the scope of the problem.

NIOSH response: The recommendation for signage has been added to the document.

Peer review: Another reviewer asked why recommendations were made to protect veterinary patients but not humans in veterinary practices.

NIOSH response: NIOSH has clarified that the recommendations are designed to protect veterinary workers not the veterinary patients.

Peer review: One reviewer was concerned with potential hazardous drugs exposures from patient or general public exposure to toilets in outpatient settings and suggested the addition of the following reference: Walton A, Bush MA, Douglas C, Allen DH, Polovich M, Spasojevic I [2020], *Surface Contamination with Antineoplastic Drugs on Two Inpatient Oncology Units,* Oncol Nurs Forum 47(3):263–272.

NIOSH response: NIOSH determined the reference cited contained useful information pertaining to identification of potentially contaminated areas and has added it to the section on surface contamination.

Peer review: One reviewer was concerned that wipe testing be conducted where hazardous drugs should not be found as an important exposure control.

NIOSH response: Ch. 6, Sec. 6.5, Surface Contamination, has been edited to include sampling where hazardous drugs are prepared, administered to patients, or otherwise handled (*i.e.,* receiving areas, transit routes throughout the facility, and waste storage areas).

Peer review: One reviewer recommended NIOSH add references on the persistence of contamination even when workplace controls are used (*i.e.,* Kopp B, Schierl R, Nowak D, 2013; and Walton A, Bush MA, Douglas C, Allen DH, Polovich M, Spasojevic I, 2020).

NIOSH response: Ch. 6, Sec. 6.5 has been edited to include the suggested references as well as others to support the premise that workplace contamination with hazardous drugs continues to be an issue in the United States.

Peer review: One reviewer suggested that *Managing Exposures* recommend ''spill drills'' to train and refresh training for employees.

NIOSH response: NIOSH concurs and has added language to the document recommending that workplaces practice for spills.

12. Charge 8. Please Provide Any Additional Comments or Suggestions Either as a List Below or Using Track Changes in the Attached Draft Document

Peer review: One reviewer suggested that *Managing Exposures* include guidance from ONS 2018 regarding the use of chewing gum and tobacco and the application of cosmetics in the areas where hazardous drugs are handled; written policies that address spill cleanup and medical surveillance; and the availability of spill kits.

NIOSH response: NIOSH concurs and has added language to the final document pertaining to the suggestions. Additionally, ONS 2018 has been both cited and listed as an additional resource.

Peer review: One reviewer recommended changing ''nurses' aides'' to ''nurses' assistants.''

NIOSH response: NIOSH concurs with the suggested change and has revised the final *Managing Exposures* accordingly.

Peer review: One reviewer suggested that ''large spill'' be defined.

NIOSH response: NIOSH concurs this should be clearer, and in the recommendation regarding a follow-up plan for workers who have experienced acute exposures from large spills has clarified that large spills may result from a broken IV bag, leaking line, or similar event. NIOSH has determined that defining ''large spill'' would be too prescriptive because ''large'' is subjective and may depend on such factors as the concentration of the drug and the amount of surface area upon which it may be spilled. Accordingly, the definition of ''large spill'' should be defined by each facility according to its own needs.

Peer review: One reviewer requested more specific language in the recommendations for training.

NIOSH response: NIOSH agrees and has added information about providing training frequently and when there are new hazardous drugs brought into the facility. Workers should be trained prior to beginning work with hazardous drugs and should demonstrate competency before they handle a hazardous drug, clean an area where hazardous drugs are

[11] Friese CR, Yang J, Mendelsohn-Victor K, McCullagh M [2019]. *Randomized Controlled Trial of an Intervention to Improve Nurses' Hazardous Drug Handling.* Oncol Nurs Forum. 46(2):248–256.

used, and perform work tasks that will potentially expose them to the body fluids of a patient who is taking hazardous drugs.

Peer review: One reviewer requested more clarity about signage.

NIOSH response: NIOSH agrees and has clarified that signage should be placed where the hazardous drugs are used and stored.

Peer review: One reviewer requested additional information about handling contaminated excreta.

NIOSH response: NIOSH agrees and has added language about handling of drug contaminated excreta.

Peer review: Two reviewers commented that *Managing Exposures* should specify the types of gloves that should be used for different hazards, and that NIOSH should clarify how often PPE should be changed and the order of doffing PPE.

NIOSH response: NIOSH disagrees that the document should provide specifics on the type of glove to be used since different glove types offer different protection from dermal exposure to hazardous drugs. NIOSH does agree that providing information on when to change PPE and the order of doffing PPE is important and has added the recommendation ''[r]emove PPE in the following order: shoe covers, sleeve covers, outer gloves, face shield, gown, respirator/mask, inner gloves'' to Sec. 6.4, Personal Protective Equipment. No change to *Managing Exposures* has been made in response to this comment.

Peer review: One reviewer had specific suggestions regarding controls for CSTDs, specifically regarding double gloving when using prefilled syringes and when plastic-backed pads should be used.

NIOSH response: NIOSH agrees with the suggestion about the use of plastic-backed pads and new language has been added to the existing discussion on CSTDs in Ch. 6, Sec. 6.2, Engineering Controls. NIOSH disagrees that double gloves are needed when using prefilled syringes and has made no changes in response to this recommendation.

Peer review: One reviewer commented that eyewash stations should be mentioned, exposure assessment through wipe sampling (at baseline and routine intervals) could be clarified, and the heading for Sec. 8.3 could be made more explicit.

NIOSH response: NIOSH agrees and has added information to Sec. 6.5 Surface Contamination, on wipe sampling, and to Sec. 7.2, Spill Control, on eyewash stations. The heading for Sec. 8.3 in the 2020 draft *Managing Exposures* has been changed to ''Additional Considerations for Handling Hazardous Drugs'' and the section was turned into a new Ch. 9.

B. Public Comments

1. Glossary

Public comment: NIOSH received comments from five commenters related to definitions in the Glossary. The following definitions were suggested:

- *Biological safety cabinet (BSC):* ''laboratory'' may be confusing; consider instead ''an enclosed, ventilated workspace . . .''
- *Cleaning:* Removal of organic and inorganic material from objects and surfaces using water, detergents, surfactants, solvents, and/or other chemicals.
- *Decontamination:* Inactivating, neutralizing, or physically removing hazardous drug residue from non-disposable surfaces and transferring it to absorbable, disposable materials appropriate to the area being cleaned.
- *Deactivation:* To render a compound inert or inactive.
- *Disinfection:* A process of inhibiting or destroying microorganisms.

NIOSH response: NIOSH has added the suggested definitions for ''deactivation'' and ''disinfection'' in the final *Managing Exposures.*

2. Chapter 1.0 Purpose and Scope

Public comment: A commenter asked for clarity on recommendations for retail pharmacies.

NIOSH response: NIOSH notes that retail facilities should perform the appropriate risk assessments. The assessments may show, due to limited handling or manipulation of open containers, that the risks of exposure are limited. However, the assessment of potential handling scenarios in the facility should still be performed to determine what those risks are. No change was made to the final *Managing Exposures* in response to this comment.

Public comment: A commenter suggested NIOSH highlight potential exposures to hazardous drugs through handling of human fluids and wastes.

NIOSH response: NIOSH agrees and has edited Ch. 4.0, Occupational Exposure Assessment, to highlight the potential risk from exposure to human waste products (*i.e.,* urine, feces, vomit).

3. Chapter 6.0 Risk Management Plan

Public comment: Several commenters on both the *Managing Exposures* draft and the *List* draft mentioned specific issues regarding the assessment of risk discussed in Ch. 6.0. Several asked for more specific guidance for site risk assessments, particularly surrounding administration and compounding.

NIOSH response: NIOSH disagrees that *Managing Exposures* should provide more specific guidance for risk assessments. Each facility should conduct its own risk assessment to determine which tasks within the facility would be considered administration or compounding. In response to these comments, NIOSH has revised the language in the final document to specify that each facility should conduct its own risk assessment and develop SOPs specific to its use of hazardous drugs.

a. Section 6.2 Engineering Controls

Public comment: Seven comments were received on engineering controls discussed in Sec. 6.2 (in addition to comments related to CSTDs, which are considered below). Commenters suggested adding information about engineering controls, such as uninterrupted power supply, negative pressure, and unidirectional flow of air. Some commenters also suggested specific recommendations regarding use of BSCs and compounding aseptic containment isolators (CACIs), clarification of the recommendations regarding nonsterile preparations in footnote 4 of the Table of Controls in Ch. 8, use of glove bags and suggestions for various updated references. One commenter noted that cleaning is not the only step needed to ensure the BSC or CACI is in optimal condition to compound drugs. Proper use also includes processes to deactivate (*i.e.,* render a compound inert or inactive), decontaminate (*i.e.,* remove hazardous drug residue), and disinfect (*i.e.,* destroy microorganisms).

NIOSH response: BSC selection should be based on a risk assessment of the hazardous drugs in use at each facility and be flexible enough to allow for evolving equipment types and performance specifications. In response to comments, NIOSH has clarified the language in the document as follows:

> Class II BSCs that exhaust filtered cabinet air to the outdoors are recommended. BSCs that exhaust cabinet air back into the segregated engineering control (SEC) are discouraged. When the work activity requires handing volatiles, a risk analysis should be conducted to identify the appropriate Class II BSC selection to ensure that any air recirculation internal to the BSC does not result in vapor accumulation.

NIOSH provides recommendations related to the proper use of ventilated cabinets, and, in response to comments, NIOSH has revised one of the recommendations to clarify that proper use requires users to ''[i]nstall, maintain, deactivate, decontaminate, clean and disinfect the BSC.'' Another

recommendation has been revised to read ''[h]ave readily available or display a current field-certification label prominently on the ventilated cabinet.'' NIOSH has also added recommendations for negative pressure and an uninterrupted power source.

In response to comments, NIOSH has defined the terms ''deactivate,'' ''decontaminate,'' and ''disinfect'' in the Glossary to improve clarity.

In reference to the comment on nonsterile preparations in the Table of Control Approaches footnote 4, the footnote is only intended for nonsterile preparations, as stated. It should not be taken to suggest that NIOSH recommends that sterile compounding does not need to be performed in a sterile ventilated engineering control as long as the person compounding is wearing appropriate respiratory protection. This document addresses worker safety. In the interest of patient safety and drug safety all appropriate USP guidelines should be followed. No change to the document was made in response to this comment.

Regarding the comment on glove bag use, NIOSH is unaware of any reason why a small sterile glove bag that does not deflect airflow to outside of the direct compounding area could not be used inside a BSC. NIOSH is also unaware of any confusion or conflicts created by past glove bag recommendations. In NIOSH's experience, these are only rarely used but they could indeed be used as described and would also be protective. NIOSH is unaware of a unidirectional airflow requirement. Even if used under unidirectional airflow, if the glove bag interior and inserted supplies were all sterile, and the glove bag placed beneath a laminar flow of ISO 5 air, NIOSH believes this still would meet the intent of the recommendation. Of course, each facility should conduct their own risk assessment and develop SOPs specific to their use of hazardous drugs. No change to *Managing Exposures* has been made in response to this comment.

Closed System Transfer Devices

Public comment: One commenter suggested removing or altering images that reference proprietary names in Figures 4 and 5. Particularly in Figure 5, which includes a photograph of a robotic drug preparation system with the manufacturer's name in the photo credit. This device is ''not yet fully functional in the United States'' and should not be part of the NIOSH informational document. In general, such images may not be representative of the numerous products available on the U.S. market for safely compounding hazardous drugs and demonstrates bias.

NIOSH response: Regarding the figures, NIOSH has decided to keep them in the final *Managing Exposures.* However, in Figure 4, NIOSH has substituted more non-specific images of two types of CSTDs that are representative of those available in the U.S. market rather than photographs. The following Disclaimer continues to be included on the title page: ''[m]ention of any company or product does not constitute endorsement by the National Institute for Occupational Safety and Health (NIOSH).''

Public comment: A commenter suggested the removal of references to robotic systems.

NIOSH response: NIOSH has not changed the document in response to this comment, noting that the text already states ''robotic systems are considered supplemental controls that should only be used in combination with primary engineering controls (*i.e.,* BSCs and CACIs) to further protect against worker exposures to hazardous drugs.''

Public comment: One commenter requested clarification in the wording related to priming IV tubing.

NIOSH response: In response to the comment, NIOSH has reworded the sentence to state, ''[c]ompounding personnel should prime the IV tubing and syringes inside the ventilated cabinet or prime them in-line with nondrug solutions or by use of a CSTD to prevent the escape of hazardous drugs.''

Public comment: Five comments were received on recommendations regarding CSTDs, all specifically focused on issues of compatibility with the drug product.

NIOSH response: Each facility should conduct its own risk assessment and develop SOPs specific to its use of hazardous drugs. NIOSH states in Sec. 8.1 that the MSHI should be consulted. However, in response to comments, NIOSH has added the language ''when dosage form allows'' in every case where a CSTD is recommended in the Table of Control Approaches.

b. Section 6.3 Administrative Controls

Alternative Duty

Public comment: Two commenters made suggestions on alternative duty. Both proposed including recommendations on the importance of alternative duty for healthcare workers who are pregnant, trying to conceive, or who are breastfeeding.

NIOSH response: NIOSH recognizes that alternative duty is one method to control hazardous exposures to healthcare workers who are pregnant, trying to conceive, or who are breastfeeding. However, NIOSH has determined that the specific control strategies should be left up to the employer who is in the best position to conduct an in-depth individual facility risk assessment. No change to *Managing Exposures* has been made in response to this comment.

Cleaning

Public comment: One commenter requested clarification of the terms associated with cleaning activities.

NIOSH response: In response to the comment, NIOSH has edited Sec. 6.3 to clarify the difference between cleaning and decontamination. In Sec. 6.3, NIOSH has replaced the term ''rags'' with ''disposable wipes'' and has clarified that ''[w]ork surfaces should be deactivated, decontaminated, and cleaned before and after each activity and at the beginning and end of the work shift.'' The terms ''deactivation'' and ''decontamination'' have been added to the Glossary.

Counting Tablets

Public comment: Four commenters had questions on counting tablets, discussed in Sec. 6.3. Specifically, the comments questioned whether the information was considered to establish requirements or merely recommendations, and how the recommendation to limit the use of automated counting machines should be implemented.

NIOSH response: In this document, NIOSH is issuing recommendations not requirements. The document is informational in nature and creates no legal obligation. Regarding counting tablets, NIOSH has clarified the language in Sec. 6.3 of the document recommending that automated counting machines be prohibited for hazardous drugs unless the machine has been evaluated and found to not release powders.

Public comment: One commenter suggested changing the NIOSH recommendations for use of automated counting machines.

NIOSH response: In response to the comment, NIOSH has revised the recommendations on the use of counting machines to include the following text and references:

Tablet and capsule forms of hazardous drugs should not be placed in an automated counting machine unless a facility risk assessment validates that the specific machine does not introduce dust and contamination; most counting machines can stress tablets and capsules thereby introduce

powdered contaminants into the work area [citations omitted].

c. Section 6.4 Personal Protective Equipment

Use of Gloves

Public comment: Fourteen comments were received about the recommendations on glove use discussed in Sec. 6.4. The comments specifically addressed the use of single versus double gloves during shipping and receiving and while handling prefilled syringes. There were also comments on the use of spray alcohol on gloves and the use of sleeve covers with gloves.

NIOSH response: In response to several comments, the recommendation for receiving, unpacking, and placing in storage has been changed to single glove. Although NIOSH already recommends employers ''ensure that the selected gloves are not degraded by the alcohol,'' the recommendation for use of spray alcohol was removed. NIOSH is retaining the recommendation of a single glove for manufacturers' prefilled syringes as it is anticipated that they have less of a chance for exterior contamination. Facilities should conduct their own risk assessment to determine gloving requirements for their specific situations.

Use of Gowns, Sleeve Covers, and Head Covers

Public comment: Seven reviewers suggested that the recommendation for sleeve covers should be removed or modified.

NIOSH response: In response to the comment, NIOSH has turned the recommendation for the use of sleeves into a consideration: ''[c]onsider using sleeve covers if there is a gap between the gown and the glove.''

Public comment: One commenter suggested that NIOSH state that gowns be shown to resist permeation by hazardous drugs. Another reviewer suggested that information about the frequency of changing gowns be added.

NIOSH response: NIOSH has added language clarifying that gowns should be shown ''to resist permeation by the types of hazardous drugs used'' to Sec. 6.4, Gowns. Language has also been added to recommend changing gowns after one use or at a frequency determined by the employer and immediately after a spill or splash and disposing of in an appropriate waste container.

Public comment: One commenter suggested that NIOSH should define the term ''face shield'' to reduce the risk of confusion.

NIOSH response: Because face shields are very common in healthcare (and the general public) the term is generally understood and no further definition was required. No change to *Managing Exposures* has been made in response to this comment.

Use of Respirators

Public comment: Five comments were received on respirator use. Some requested detailed guidance for spill and cleaning activities. Other comments included a request for guidance during compounding and clarification on respirator selection when using volatile hazardous drugs. One comment suggested that the powered air-purifying respirator (PAPR) depicted in Figure 6 is not appropriate for use with drugs that are volatile.

NIOSH response: Regarding the comments for specific guidance, NIOSH reiterates that each facility should conduct its own risk assessment and develop SOPs for specific scenarios. NIOSH has clarified its guidance on respirator use with volatile hazardous drugs by adding the recommendation: ''[u]se a full-facepiece combination particulate/chemical cartridge-type respirator or a powered air-purifying respirator (PAPR) whenever handling volatile hazardous drugs or aerosolizing hazardous drugs for inhalation or nebulized therapy.'' The images in Figure 6 were used as examples of the types of respirators that could be used. to protect workers from hazardous drug exposures. The type of PAPR in Figure 6 may not be the correct PAPR for every situation. Facilities should choose the correct device that fits their specific needs and as stated in the disclaimer, ''[m]ention of any company or product does not constitute endorsement by the National Institute for Occupational Safety and Health (NIOSH).'' Changes were made to the text to indicate a variety of potential respirators for different needs.

d. Section 6.5 Surface Contamination

Public comment: One comment suggested expanding the section on monitoring surface contamination. Another noted that there was no mention of assessing environmental contamination by surface wipe sampling, and that this technique has become a sophisticated and useful tool in other countries but not yet adopted by U.S. facilities handling hazardous drugs.

NIOSH response: NIOSH has revised the document to include additional references to support the recommendations on wipe testing for contamination.

e. Section 6.6 Medical Surveillance

Public comment: NIOSH received several comments on medical surveillance. Two comments mentioned the difficulty and burden of instituting a medical surveillance program in a mobile workforce and in small businesses. Another asked for clarity on the recommended frequency of clinical follow-up. One commenter stated that clinical exams and labs for medical surveillance of workers exposed to hazardous drugs be curtailed until positive evidence was available to demonstrate the usefulness of the practice. Conversely, a different commenter called for the establishment of a national registry to capture the exposures and outcomes from exposure to hazardous drugs.

NIOSH response: Regarding the difficulty, burden, and potential lack of data showing the efficacy of a medical surveillance program, NIOSH notes that ONS, OSHA, and USP all recommend medical surveillance for workers in contact with hazardous drugs. Surveillance can identify sentinel adverse health effects among workers suggesting failures in controlling exposures and thus identify the need for improvements in workplace controls, such as engineering or administrative controls or personal protective equipment. Also, individual workers may benefit from detection of disease in early stages when it may be more treatable with better clinical outcomes. No change has been made to *Managing Exposures* in response to this comment. NIOSH has no plans to recommend a national registry at this time.

4. Chapter 7.0 Waste and Spill Control

a. Section 7.1 Hazardous Drug Waste and Section 7.2 Spill Control

Waste Designation and Handling

Public comment: One commenter requested clarification of the difference between trace and overtly contaminated items and the procedures for disposal of contaminated items.

NIOSH response: A new Sec. 7.1, Hazardous Drug Waste, has been added which describes the 3 types of waste streams: hazardous waste, as defined by the Resource Conservation and Recovery Act (RCRA);[12] trace chemotherapy waste; and nonhazardous pharmaceutical waste. The new section also includes a description of disposal containers. A site-specific assessment of risk should be performed to determine facility SOPs.

Public comment: NIOSH received eight comments on waste designation

[12] 42 U.S.C. 6901 *et seq.,* 40 CFR 261.

and handling. Several specific recommendations were offered on how to handle waste contaminated with hazardous drugs. Several commenters asked for clarification of terms, specifically differentiating between waste contaminated with trace amounts of hazardous drugs and hazardous waste.

NIOSH response: NIOSH appreciates the clarification and suggestions regarding waste management. Several revisions to address these comments have been made throughout the document. However, a comprehensive list of waste handling procedures is beyond the scope of this document. The narrative section on waste handling was expanded to clarify trace waste from hazardous waste to address some of these concerns.

5. Section 8.0 Control Approaches for Safe Handling of Hazardous Drugs by Activity and Formulation

a. Section 8.1 Introduction to Table of Control Approaches

Public comment: One commenter suggested deleting the Table of Control Approaches, noting that it was unnecessary and overly conservative. In particular, the table does not appropriately differentiate between control measures (*e.g.,* ventilation, respiratory protection) based on factors such as dosage forms of hazardous drugs (*e.g.,* intact tablet and capsules vs. bulk active pharmaceutical ingredients), types of hazardous drugs (antineoplastic vs. non-antineoplastic), and other important factors that affect how medications are handled in healthcare facilities and the degree to which workers may be exposed. In this way, the Table of Control Approaches is inconsistent with the risk assessment procedures outlined in USP <800>.

NIOSH response: NIOSH disagrees, finding that the Table of Control Approaches has broad support among peer reviewers and public commenters who provided input on the May 2020 draft and is foundational to this activity. *Managing Exposures* lays out information regarding risk management strategies. Exposure assessments that include consideration of many facilities' specific factors such as dosage forms and each individual drug's potential hazards to determine the best control measures are part of the strategies discussed in this document. The table represents common handling situations in healthcare workplaces and should be considered within the broader framework the document provides. While NIOSH is independent from USP, the use of the Table of Control Approaches within the framework of this document is consistent with the use of risk assessment procedures laid out in USP <800>. No change has been made to *Managing Exposures* in response to this comment.

Public comment: One commenter suggested considering reformatting the Table of Control Approaches. Another commenter suggested that gloves should be American Society for Testing and Materials (ASTM) rated and that gowns should be impervious and single use.

NIOSH response: In response to the comment, NIOSH revised the table to clarify that gloves should be ASTM rated and gowns should be impervious and single use. A new line was added to the table to include the headers Engineering Controls and PPE.

b. Section 8.2 Control Approaches by Activity and Formulation

Receiving and Packaging

Public comment: Two comments were received on recommendations surrounding receiving and packaging, discussed in Sec. 8.2. One comment suggested that single gloves were appropriate for unpacking, and the other asked if repackaging was considered compounding.

NIOSH response: NIOSH agrees that single gloves for receiving and unpacking were appropriate and has changed the recommendations in Sec. 8.2 and in the Table of Control Approaches accordingly. Repackaging would not typically be considered compounding if it does not change the final dosage form.

Transportation

Public comment: One commenter suggested that gloves did not provide protection during transportation, but that they could actually increase the hazard by spreading potential exposure.

NIOSH response: NIOSH has retained the recommendation, discussed in Sec. 8.2, that gloves should be worn during transport of hazardous drugs in a facility. Each facility should conduct its own risk assessment and develop SOP specific to its use of hazardous drugs. No change has been made to *Managing Exposures* in response to this comment.

Compounding of Drugs

Public comment: Four commenters commented on the recommendations regarding drug compounding, discussed in Sec. 8.2. Commenters requested that tablet or capsule crushing not be included in compounding, questioned whether prefilled IV bags needed to have tubing attached and be primed, and requested guidance on pouring liquids from one container to another.

NIOSH response: In *Managing Exposures,* NIOSH has moved tablet crushing to the administration recommendations to be consistent with USP guidance which does not consider crushing or splitting tablets as ''compounding.''

Regarding precautions with IV bags, this would not be considered compounding under the FDA definition, as the final formulation is unchanged. Pouring from one container to another also would not be considered compounding under the FDA definition. No change has been made to *Managing Exposures* in response to these comments.

Administration

Public comment: Six comments were received on administering drugs in the Table of Control Approaches. Two commenters questioned the distinction between prefilled and in-house prepared syringes. Other commenters asked about vented filters to remove bubbles in IV tubing, ophthalmologic application, and procedures to minimize risks from crushing tablets.

NIOSH response: An in-house prepared syringe may contain trace contamination and a manufacturer's prefilled syringe can be assumed to be clean. Accordingly, NIOSH has maintained the subsections of the Table of Control Approaches distinguishing between prefilled and in-house prepared syringes. The use of vented filters allows bubbles to be eliminated from infusion lines. When inline vented filters use is suggested for compounds prone to outgassing, an assessment of the risk of exposure would be appropriate. It is expected that the level of drug vapor released during infusion will be miniscule and the level of dilution once passing through the vent into the room air would limit the hazard posed by outgassing during infusion.

Regarding ophthalmic application, NIOSH agrees with the commenter and has added information on ophthalmologic applications to the Table of Control Approaches and Sec. 8.2. Regarding minimizing risks to workers for specific scenarios, an intact coated tablet or capsule will have a coating preventing the release of dusts/powders or liquids; and a cut, crushed or uncoated tablet will provide a possible source of dusts/powders or liquids that could expose the workers. Similarly, an in-house prepared syringe may contain trace contamination and a manufacturer's prefilled syringe can be assumed to be clean and would have less likelihood of exposing the worker to hazardous drugs. Each facility needs to conduct its own risk assessment and

develop SOPs specific to its use of hazardous drugs.

6. USP <800>

Public comment: Several commenters offered suggestions on the document's use of USP <800>. Most were concerned that USP should be cited more often.

NIOSH response: In response to commenters, USP <800> has been cited in the document where it could be determined that it could provide new information that did not originate with NIOSH (thus avoiding circular references).

Public comment: NIOSH should be differentiating between controls for antineoplastics and other hazardous drugs.

NIOSH response: NIOSH reaffirms that this document is intended to apply to all drugs on the 2023 *List* and not just antineoplastics. No change to *Managing Exposures* has been made in response to this comment.

Public comment: One commenter suggested that guidance on performing an individual drug risk assessment that meets the USP <800> standard would be helpful as alternative containment strategies and/or work practices for specific dosage forms weren't included.

NIOSH response: NIOSH disagrees with providing guidance for ''specific dosage forms'' as that is beyond the scope of this general guidance document. However, the text ''[t]he risk assessment should include evaluating the dosage form and identifying the probability of exposure'' has been added to Sec. 5.0 Risk Assessment, for clarity.

7. Other Topics

Public comment: One commenter noted that the term ''pills'' is referred throughout the document, for example, on pages 38 and 66. According to the commenter, ''pill'' is a nonspecific, outdated term and should be replaced with the word ''tablet'' instead.

NIOSH response: NIOSH agrees and has made this change throughout the final *Managing Exposures.*

Public comment: Several commenters noted spelling mistakes, errors in tables, and other editorial improvements.

NIOSH response: NIOSH thanks the commenters for pointing out these errors. NIOSH has accepted all appropriate editorial, spelling, and correction comments in its revision of *Managing Exposures.*

V. Summary of Changes to Documents

A. Procedures for Developing the NIOSH List of Hazardous Drugs in Healthcare Settings

As described in the responses to comments above, only limited clarifications were made in the *Procedures* document. Notable changes include a revision to footnote 12 to clarify that only CDER-approved drugs are included on the *List* and the addition of a new footnote 29 to clarify NIOSH's intent regarding drugs with insufficient information in the package insert to determine whether the drug meets the NIOSH definition of a hazardous drug. Other changes comprised only minor editorial improvements.

B. Managing Hazardous Drug Exposures: Information for Healthcare Settings

Changes were made to the document, *Managing Exposures,* in response to comments received. There were some reorganizations, added references and information, and clarification of recommendations, as follows:

- In response to commenters, USP <800> was cited in document where it could be determined that it had new information that did not originate with NIOSH (thus avoiding circular references). ONS 2018 was cited and listed as an additional resource.
- The language in the document was clarified to specify that each facility should conduct their own risk assessment and develop SOPs specific to their use of hazardous drugs.
- Under Administrative Control recommendations, the language was clarified that automated counting machines should be prohibited unless the automated counting machine has been evaluated and found to not release powders.
- In the recommendations on PPE, several changes were made in response to comments:
  - Gloving recommendations for receiving and unpacking were changed to a single glove.
  - Recommendation to ''spray'' sterile alcohol on gloves was removed.
  - Recommendation for the use of sleeves was changed to ''Consider using sleeve covers if there is a gap between the gown and the glove.''
- In the Table of Control Approaches:
  - Ophthalmologic administration guidance was added.
  - Recommendation for double flushing of toilets in homes was removed and replaced with new guidance that states ''Close toilet lid or use a plastic-backed absorbent pad placed over the toilet without a lid during flushing.''
  - ''Crushing or manipulating tablets or capsules'' was moved from the compounding activity formulation column to the administering activity formulation column.
- The document was edited to highlight the potential risk from exposure to human waste products (urine, feces, vomit). The topic of Medical Surveillance was moved forward in the document under Risk Management for clarity. Three new sections were added to increase the clarity and utility of the recommendations:
  - Section 6.5 Surface Contamination
  - Section 7.1 Hazardous Waste
  - Section 7.2 Spill Control
- Chapter 9 was created to reorganize information in the previous draft for clarity:
  - Chapter 9.0 Additional Considerations for Handling Hazardous Drugs
  - Section 9.1 Home Healthcare
  - Section 9.2 Veterinary Clinics (formerly Section 8.3 Steps to reduce potential exposure to hazardous drugs)

Additional references were added as suggested by commenters and peer reviewers to provide additional resources for readers.

John J. Howard,

Director, National Institute for Occupational Safety and Health, Centers for Disease Control and Prevention, Department of Health and Human Services.

[FR Doc. 2023–08900 Filed 4–26–23; 8:45 am]

BILLING CODE 4163–18–P

DEPARTMENT OF HEALTH AND HUMAN SERVICES

Administration for Children and Families

[CFDA Number: 93.647]

Announcement of the Intent To Award Single-Source Cooperative Agreements to Approved but Unfunded Diaper Distribution Pilot Applications From FY2022

AGENCY: Office of Community Services (OCS), Administration for Children and Families (ACF), Department of Health and Human Services (HHS).

ACTION: Notice of issuance of single-source awards.

SUMMARY: The ACF, OCS, Division of Community Discretionary and Demonstration Programs (DCDDP) announces the intent to award seven single-source cooperative agreements in the aggregate amount of up to $8,181,779 to approved but unfunded applications submitted to the Diaper Distribution Demonstration and Research Pilot (DDDRP) Notice of Funding Opportunity HHS–2022–ACF–OCS–EDA–0161.

The purpose of these awards is to evaluate the ability of community action agencies, social services agencies, and other non-profit community organizations to provide diapers and diapering supplies on a consistent basis through diaper distribution programs, while also offering support services for families with low incomes. Recipients will operate and expand diaper distribution programs for families with low incomes.

DATES: The proposed period of performance is May 1, 2023, to April 30, 2025.

FOR FURTHER INFORMATION CONTACT: Thom Campbell, Office of Community Services, 330 C Street SW, Washington, DC 20201. Telephone: 202–401–5455; Email: *thom.campbell@acf.hhs.gov.*

SUPPLEMENTARY INFORMATION: The above-mentioned awards will be made pursuant to Congressional intent as reflected in the Explanatory Statement (p. S8891) accompanying the Consolidated Appropriations Act, 2023:

Social Services Research and Demonstration.—The agreement continues funding for the Diaper Distribution Demonstration and Research Pilot and expects that $10,000,000 of the funds made available for awards for direct services be made to approved but unfunded applicants of funding opportunity HHS–2022–ACF–OCS–EDA–0161, as well as technical assistance and evaluation activities for such grants.

OCS announces the intent to award the following single-source awards:

Recipient	Award amount
Massachusetts Association of Community Action Programs, Boston, MA	$1,200,000.00
California Community Action Partnership Association, Sacramento, CA	1,200,000.00
Ohio Community Action Training Organization, Columbus, OH	1,200,000.00
Maryland Community Action Partnership, Annapolis, MD	1,200,000.00
Utah Community Action Partnership Association Inc, Layton, UT	1,101,779.00
Community Action Association of Alabama, Birmingham, AL	1,200,000.00
Sisseton-Wahpeton Oyate of the Lake Traverse Reservation, Agency Village, SD	1,080,000.00

Statutory Authority

The DDDRP is authorized under section 1110 of the Social Security Act; 42 U.S.C. 1310. This program was first funded by Div. H, Title II of the Consolidated Appropriations Act, 2022 (Pub. L. 117–103) as a non-statutory earmark for the Social Services Research and Demonstration.

Karen D. Shields,

Senior Grants Policy Specialist, Office of Grants Policy, Office of Administration.

[FR Doc. 2023–08830 Filed 4–26–23; 8:45 am]

BILLING CODE 4184–XX–P

DEPARTMENT OF HEALTH AND HUMAN SERVICES

Food and Drug Administration

[Docket No. FDA–2020–N–0145]

Agency Information Collection Activities; Proposed Collection; Comment Request; Reporting Associated With Animal Drug and Animal Generic Drug User Fees

AGENCY: Food and Drug Administration, HHS.

ACTION: Notice.

SUMMARY: The Food and Drug Administration (FDA or Agency) is announcing an opportunity for public comment on the proposed collection of certain information by the Agency. Under the Paperwork Reduction Act of 1995 (PRA), Federal Agencies are required to publish notice in the **Federal Register** concerning each proposed collection of information, including each proposed extension of an existing collection of information, and to allow 60 days for public comment in response to the notice. This notice solicits comments on the information collection provisions of FDA's animal drug and animal generic drug user fee programs.

DATES: Either electronic or written comments on the collection of information must be submitted by June 26, 2023.

ADDRESSES: You may submit comments as follows. Please note that late, untimely filed comments will not be considered. The *https://www.regulations.gov* electronic filing system will accept comments until 11:59 p.m. Eastern Time at the end of June 26, 2023. Comments received by mail/hand delivery/courier (for written/paper submissions) will be considered timely if they are received on or before that date.

Electronic Submissions

Submit electronic comments in the following way:

- *Federal eRulemaking Portal: https://www.regulations.gov.* Follow the instructions for submitting comments. Comments submitted electronically, including attachments, to *https://www.regulations.gov* will be posted to the docket unchanged. Because your comment will be made public, you are solely responsible for ensuring that your comment does not include any confidential information that you or a third party may not wish to be posted, such as medical information, your or anyone else's Social Security number, or confidential business information, such as a manufacturing process. Please note that if you include your name, contact information, or other information that identifies you in the body of your comments, that information will be posted on *https://www.regulations.gov.*
- If you want to submit a comment with confidential information that you do not wish to be made available to the public, submit the comment as a written/paper submission and in the manner detailed (see ''Written/Paper Submissions'' and ''Instructions'').

Written/Paper Submissions

Submit written/paper submissions as follows:

- *Mail/Hand Delivery/Courier (for written/paper submissions):* Dockets Management Staff (HFA–305), Food and Drug Administration, 5630 Fishers Lane, Rm. 1061, Rockville, MD 20852.
- For written/paper comments submitted to the Dockets Management Staff, FDA will post your comment, as well as any attachments, except for information submitted, marked and identified, as confidential, if submitted as detailed in ''Instructions.''

Instructions: All submissions received must include the Docket No. FDA–2020–N–0145 for ''Reporting Associated With Animal Drug and Animal Generic Drug User Fees.'' Received comments, those filed in a timely manner (see **ADDRESSES**), will be placed in the docket and, except for those submitted as ''Confidential Submissions,'' publicly viewable at *https://www.regulations.gov* or at the Dockets Management Staff between 9 a.m. and 4 p.m., Monday through Friday, 240–402–7500.

• Confidential Submissions—To submit a comment with confidential information that you do not wish to be made publicly available, submit your comments only as a written/paper submission. You should submit two copies total. One copy will include the information you claim to be confidential with a heading or cover note that states ''THIS DOCUMENT CONTAINS CONFIDENTIAL INFORMATION.'' The Agency will review this copy, including the claimed confidential information, in its consideration of comments. The second copy, which will have the claimed confidential information redacted/blacked out, will be available for public viewing and posted on *https://www.regulations.gov.* Submit both copies to the Dockets Management Staff. If you do not wish your name and contact information to be made publicly available, you can provide this information on the cover sheet and not in the body of your comments and you must identify this information as ''confidential.'' Any information marked as ''confidential'' will not be disclosed except in accordance with 21 CFR 10.20 and other applicable disclosure law. For more information about FDA's posting of comments to public dockets, see 80 FR 56469, September 18, 2015, or access the information at: *https://www.govinfo.gov/content/pkg/FR-2015-09-18/pdf/2015-23389.pdf.*

Docket: For access to the docket to read background documents or the electronic and written/paper comments received, go to *https://www.regulations.gov* and insert the docket number, found in brackets in the heading of this document, into the ''Search'' box and follow the prompts and/or go to the Dockets Management Staff, 5630 Fishers Lane, Rm. 1061, Rockville, MD 20852, 240–402–7500.

FOR FURTHER INFORMATION CONTACT: Domini Bean, Office of Operations, Food and Drug Administration, Three White Flint North, 10A–12M, 11601 Landsdown St., North Bethesda, MD 20852, 301–796–5733, *PRAStaff@fda.hhs.gov.*

SUPPLEMENTARY INFORMATION: Under the PRA (44 U.S.C. 3501–3521), Federal Agencies must obtain approval from the Office of Management and Budget (OMB) for each collection of information they conduct or sponsor. ''Collection of information'' is defined in 44 U.S.C. 3502(3) and 5 CFR 1320.3(c) and includes Agency requests or requirements that members of the public submit reports, keep records, or provide information to a third party. Section 3506(c)(2)(A) of the PRA (44 U.S.C. 3506(c)(2)(A)) requires Federal Agencies to provide a 60-day notice in the **Federal Register** concerning each proposed collection of information, including each proposed extension of an existing collection of information, before submitting the collection to OMB for approval. To comply with this requirement, FDA is publishing notice of the proposed collection of information set forth in this document.

With respect to the following collection of information, FDA invites comments on these topics: (1) whether the proposed collection of information is necessary for the proper performance of FDA's functions, including whether the information will have practical utility; (2) the accuracy of FDA's estimate of the burden of the proposed collection of information, including the validity of the methodology and assumptions used; (3) ways to enhance the quality, utility, and clarity of the information to be collected; and (4) ways to minimize the burden of the collection of information on respondents, including through the use of automated collection techniques, when appropriate, and other forms of information technology.

Animal Drug and Animal Generic Drug User Fee Programs

OMB Control Number 0910–0540—Extension

This information collection helps support implementation of the Animal Drug User Fee Act of 2003 (ADUFA) (Pub. L. 108–130) and Animal Generic Drug User Fee Act of 2008 (AGDUFA) (Pub. L. 110–316), established in sections 740 and 741 of the Federal Food, Drug, and Cosmetic Act (FD&C Act) (21 U.S.C. 379j–12 and 21 U.S.C. 379j–21), respectively. Under ADUFA, FDA assesses and collects user fees for certain new animal drug applications and supplements, products, establishments, and sponsors of new animal drug applications and/or investigational new animal drug file submissions. The ADUFA program is currently reauthorized through September 30, 2023, and FDA efforts to engage interested stakeholders in the 2023 reauthorization is ongoing. More information regarding the ADUFA program can be found at *https://www.fda.gov/industry/fda-user-fee-programs/animal-drug-user-fee-act-adufa,* including current user fee rates applicable to animal drug submissions. Under AGDUFA, FDA assesses and collects user fees for certain abbreviated (generic) new animal drug applications and supplements, products, and sponsors of generic new animal drug applications and/or generic investigational new animal drug file submissions. The AGDUFA program is currently reauthorized through September 30, 2023, and FDA efforts to engage interested stakeholders in the 2023 reauthorization is ongoing. More information regarding the AGDUFA program can be found at *https://www.fda.gov/industry/fda-user-fee-programs/animal-generic-drug-user-fee-act-agdufa,* including current user fee rates applicable to generic animal drug submissions.

These user fee program resources support FDA's responsibilities to ensure that new animal drugs are safe and effective for animals, as well as ensuring the safety of food from treated animals.

Sponsors of new animal drug applications complete a user fee cover sheet and submit it through CVM's eSubmitter. The Animal Drug User Fee cover sheet (Form FDA 3546) is designed to collect the minimum necessary information to determine whether a fee is required for the review of an application or supplement or whether an application fee waiver was granted, to determine the amount of the fee required, and to ensure that each animal drug user fee payment is appropriately linked to the animal drug application for which payment is made. The form, when completed electronically, results in the generation of a unique payment identification number used by FDA to track the payment. The information collected is used by FDA's Center for Veterinary Medicine (CVM, the Center) to initiate the administrative screening of new animal drug applications and supplements.

Similarly, sponsors of abbreviated new animal drug applications also complete a user fee cover sheet and submit it through CVM's eSubmitter. The AGDUFA cover sheet (Form FDA 3728) is also designed to collect the minimum necessary information to determine whether a fee is required for review of an application, to determine the amount of the fee required, and to ensure that each animal generic drug user fee payment is appropriately linked to the abbreviated new animal drug application for which payment is made. The form, when completed electronically, results in the generation of a unique payment identification number used by FDA to track the payment. The information collected is used by CVM to initiate the administrative screening of abbreviated new animal drug applications.

Both sections 740 and 741 of the FD&C Act provide for waivers, reductions, and exemptions of fees. To assist respondents with submitting

requests for waivers or reductions of ADUFA user fees, we developed guidance for industry (GFI) #170 entitled ''Animal Drug User Fees and Fee Waivers and Reductions'' (April 2023), available at *https://www.fda.gov/regulatory-information/search-fda-guidance-documents/cvm-gfi-170-animal-drug-user-fees-and-fee-waivers-and-reductions.* This document discusses the types of fees FDA is authorized to collect under section 740 of the FD&C Act, and how to request waivers or reductions from these fees. Further, this guidance also describes what information FDA recommends be submitted in support of a request for a fee waiver or reduction, a request for reconsideration of denial of a fee waiver or reduction request, or an appeal of the denial decision in accordance with 21 CFR 10.75; how to submit such a request or appeal; and FDA's process for reviewing such requests or appeals.

Similarly, we developed guidance for industry (GFI) #199 entitled ''Animal Generic Drug User Fees and Fee Waivers and Reductions'' (May 2009), available at *https://www.fda.gov/regulatory-information/search-fda-guidance-documents/cvm-gfi-199-animal-generic-drug-user-fees-and-fee-waivers-and-reductions.* This document discusses the types of fees FDA is authorized to collect under section 741(a)(1) of the FD&C Act, and how to request waivers or reductions from these fees. Further, this guidance also describes what information FDA recommends be submitted in support of a request for a fee waiver or reduction, a request for reconsideration of denial of a fee waiver or reduction request, or an appeal of the denial decision in accordance with 21 CFR 10.75; how to submit such a request or appeal; and FDA's process for reviewing such requests or appeals.

We use the information submitted by respondents to determine whether requests for waiver or reduction of user fees, reconsideration requests, or appeals may be granted.

We estimate the burden of this collection of information as follows:

TABLE 1—ESTIMATED ANNUAL REPORTING BURDEN [1]

FD&C Act section; activity	FDA form No.	Number of respondents	Number of responses per respondent	Total annual responses	Average burden per response	Total hours
User fee cover sheets, by type						
740(a)(1); Animal Drug User Fee cover sheet.	FDA 3546	15	1	15	1	15
741(a)(1); Animal Generic Drug User Fee cover sheet.	FDA 3728	22	2	44	.08 (5 minutes)	3.5
Waiver and other requests, by type						
740(d)(1)(A); significant barrier to innovation.	N/A	65	1	65	2	130
740(d)(1)(B); fees exceed cost	N/A	8	3.75	30	0.5 (30 minutes)	15
740(d)(1)(C); free choice feeds	N/A	4	1	4	2	8
740(d)(1)(D); minor use or minor species.	N/A	73	1	73	2	146
740(d)(1)(E); small business	N/A	1	1	1	2	2
741(d)(1); minor use or minor species.	N/A	2	1	2	2	4
Request for reconsideration of a decision.	N/A	1	1	1	2	2
21 CFR 10.75; Appeal of a decision.	N/A	1	1	1	2	2
Total						327.5

[1] There are no capital costs or operating and maintenance costs associated with this collection of information.

Our estimated burden for the information collection reflects an overall increase. We attribute this adjustment to an increase in the number of submissions we have received since our last evaluation. The total number of annual responses is based on the average number of submissions received by FDA in fiscal years 2019 to 2021. The estimated time we attribute to the hours per response is based on our experience with the various submissions and reflects the average burden we attribute to all respondents.

Dated: April 24, 2023.

Lauren K. Roth,

Associate Commissioner for Policy.

[FR Doc. 2023–08946 Filed 4–26–23; 8:45 am]

BILLING CODE 4164–01–P

DEPARTMENT OF HEALTH AND HUMAN SERVICES

Food and Drug Administration

[Docket No. FDA–2023–N–0894]

Agency Information Collection Activities; Proposed Collection; Comment Request; The Real Cost Monthly Implementation Assessment

AGENCY: Food and Drug Administration, HHS.

ACTION: Notice.

SUMMARY: The Food and Drug Administration (FDA or Agency) is announcing an opportunity for public comment on the proposed collection of certain information by the Agency.

Under the Paperwork Reduction Act of 1995 (PRA), Federal Agencies are required to publish a notice in the **Federal Register** concerning each proposed collection of information and to allow 60 days for public comment in response to the notice. This notice solicits comments on a proposed information collection entitled ''The Real Cost Monthly Implementation Assessment.''

DATES: Either electronic or written comments on the collection of information must be submitted by June 26, 2023.

ADDRESSES: You may submit comments as follows. Please note that late, untimely filed comments will not be considered. The *https://www.regulations.gov* electronic filing system will accept comments until 11:59 p.m. Eastern Time at the end of June 26, 2023. Comments received by mail/hand delivery/courier (for written/paper submissions) will be considered timely if they are postmarked or the delivery service acceptance receipt is on or before that date.

Electronic Submissions

Submit electronic comments in the following way:

- *Federal eRulemaking Portal: https://www.regulations.gov.* Follow the instructions for submitting comments. Comments submitted electronically, including attachments, to *https://www.regulations.gov* will be posted to the docket unchanged. Because your comment will be made public, you are solely responsible for ensuring that your comment does not include any confidential information that you or a third party may not wish to be posted, such as medical information, your or anyone else's Social Security number, or confidential business information, such as a manufacturing process. Please note that if you include your name, contact information, or other information that identifies you in the body of your comments, that information will be posted on *https://www.regulations.gov.*
- If you want to submit a comment with confidential information that you do not wish to be made available to the public, submit the comment as a written/paper submission and in the manner detailed (see ''Written/Paper Submissions'' and ''Instructions'').

Written/Paper Submissions

Submit written/paper submissions as follows:

- *Mail/Hand Delivery/Courier (for written/paper submissions):* Dockets Management Staff (HFA–305), Food and Drug Administration, 5630 Fishers Lane, Rm. 1061, Rockville, MD 20852.
- For written/paper comments submitted to the Dockets Management Staff, FDA will post your comment, as well as any attachments, except for information submitted, marked and identified, as confidential, if submitted as detailed in ''Instructions.''

Instructions: All submissions received must include the Docket No. FDA–2023–N–0894 for ''The Real Cost Monthly Implementation Assessment.'' Received comments, those filed in a timely manner (see **ADDRESSES**), will be placed in the docket and, except for those submitted as ''Confidential Submissions,'' publicly viewable at *https://www.regulations.gov* or at the Dockets Management Staff between 9 a.m. and 4 p.m., Monday through Friday, 240–402–7500.

- Confidential Submissions—To submit a comment with confidential information that you do not wish to be made publicly available, submit your comments only as a written/paper submission. You should submit two copies total. One copy will include the information you claim to be confidential with a heading or cover note that states ''THIS DOCUMENT CONTAINS CONFIDENTIAL INFORMATION.'' The Agency will review this copy, including the claimed confidential information, in its consideration of comments. The second copy, which will have the claimed confidential information redacted/blacked out, will be available for public viewing and posted on *https://www.regulations.gov.* Submit both copies to the Dockets Management Staff. If you do not wish your name and contact information to be made publicly available, you can provide this information on the cover sheet and not in the body of your comments and you must identify this information as ''confidential.'' Any information marked as ''confidential'' will not be disclosed except in accordance with 21 CFR 10.20 and other applicable disclosure law. For more information about FDA's posting of comments to public dockets, see 80 FR 56469, September 18, 2015, or access the information at: *https://www.govinfo.gov/content/pkg/FR-2015-09-18/pdf/2015-23389.pdf.*

Docket: For access to the docket to read background documents or the electronic and written/paper comments received, go to *https://www.regulations.gov* and insert the docket number, found in brackets in the heading of this document, into the ''Search'' box and follow the prompts and/or go to the Dockets Management Staff, 5630 Fishers Lane, Rm. 1061, Rockville, MD 20852, 240–402–7500.

FOR FURTHER INFORMATION CONTACT: JonnaLynn Capezzuto, Office of Operations, Food and Drug Administration, Three White Flint North, 10A–12M, 11601 Landsdown St., North Bethesda, MD 20852, 301–796–3794, *PRAStaff@fda.hhs.gov.*

SUPPLEMENTARY INFORMATION: Under the PRA (44 U.S.C. 3501–3521), Federal Agencies must obtain approval from the Office of Management and Budget (OMB) for each collection of information they conduct or sponsor. ''Collection of information'' is defined in 44 U.S.C. 3502(3) and 5 CFR 1320.3(c) and includes Agency requests or requirements that members of the public submit reports, keep records, or provide information to a third party. Section 3506(c)(2)(A) of the PRA (44 U.S.C. 3506(c)(2)(A)) requires Federal Agencies to provide a 60-day notice in the **Federal Register** concerning each proposed collection of information before submitting the collection to OMB for approval. To comply with this requirement, FDA is publishing notice of the proposed collection of information set forth in this document.

With respect to the following collection of information, FDA invites comments on these topics: (1) whether the proposed collection of information is necessary for the proper performance of FDA's functions, including whether the information will have practical utility; (2) the accuracy of FDA's estimate of the burden of the proposed collection of information, including the validity of the methodology and assumptions used; (3) ways to enhance the quality, utility, and clarity of the information to be collected; and (4) ways to minimize the burden of the collection of information on respondents, including through the use of automated collection techniques, when appropriate, and other forms of information technology.

The Real Cost Monthly Implementation Assessment

OMB Control Number 0910–NEW

This information collection supports the development and implementation of FDA public education campaigns related to tobacco use. To reduce the public health burden of tobacco use in the United States and educate the public—especially young people—about the dangers of tobacco use, the FDA Center for Tobacco Products (CTP) is developing and implementing multiple public education campaigns.

FDA launched ''The Real Cost'' in February 2014, seeking to reduce tobacco use among at-risk youth ages 12 to 17 in the United States who are open

to smoking cigarettes and/or using electronic nicotine delivery systems (ENDS) products, or who have already experimented with cigarettes and/or ENDS products. Complementary evaluation studies, including the ''Evaluation of FDA's Public Education Campaign on Teen Tobacco (ExPECTT),'' were implemented to measure awareness of ''The Real Cost'' paid media campaign among youth ages 12 to 17 in the United States, and to understand how awareness is related to change in key outcomes.

Although outcome evaluation studies of ''The Real Cost'' have and continue to assess the impact of awareness on outcomes, no studies have sought to assess the implementation of ''The Real Cost.'' As FDA continues to increase the presence of ''The Real Cost'' on digital channels (*e.g.,* Hulu, YouTube, Instagram), the need for an implementation evaluation has become clear as these messages are received by the target audience on digital channels differently compared to how the messages are received on broadcast channels. Before the migration of campaign ads to digital channels, ads from ''The Real Cost'' were primarily aired on broadcast TV. In the broadcast space, for people to avoid receiving the message, they needed to be proactive (*e.g.,* finding the remote to change the channel or leaving the room). In the digital space, however, people need to be proactive to watch the full message, like stopping scrolling on social media or skipping the ad on YouTube. Assessment of this information is integral to understanding self-reported ad awareness levels, as well as how our audience experiences and processes the ads as they are airing in a digital, real-world setting.

Therefore, we propose a study to help us understand, in a digital setting, how youth experience the messages, how they engage with messages, the extent to which youth report being exposed to messages, and how youth process the messages. Studying exposure to ad messages as it naturally occurs in the real world can help us understand the points of connection—or disconnection—between the results of copy testing studies (which assess responses to the ads with forced exposure to them) and outcome evaluation findings (which are based on natural exposure to ads in the real world). Data gathered from this assessment will also provide the necessary and timely information to optimize campaign messages, the digital media buy (*i.e.,* where, how, and when ads are shown), and creative rotations (*i.e.,* which ads are shown).

''The Real Cost'' Monthly Implementation Assessment is a repeated cross-sectional survey that will be conducted using web-based surveys that are self-administered on personal computers or web enabled mobile devices to collect rapid data on ''The Real Cost'' ads. Data from up to 2,000 youth in the United States will be collected each month for up to 24 months. To be eligible, youth and young adults must be between the ages of 12 to 20 and have not taken ''The Real Cost'' Monthly Implementation Assessment survey within the past 3 months. We will use an Ipsos Knowledge Networks Panel to collect data on ''The Real Cost'' ads. This design offers flexibility to assess new ad messages, as they air across various digital platforms, examine their performance over time, as well as the ability to pivot and add new survey measures as necessary. Monthly data will also allow us to obtain timely information on ad awareness, perceived effectiveness, as well as on youth attention and processing of the ads.

The purpose of FDA's ''The Real Cost'' Monthly Implementation Assessment is to evaluate the following key components about ''The Real Cost'' ads:

- Awareness of ''The Real Cost'' ads.
- Attention behaviors when seeing ''The Real Cost'' ads.
- Processing of ''The Real Cost'' ads, including:
  - Engagement with the ads.
  - Main message comprehension.
  - Acceptance and/or rejection of the ads.
- Perceived effectiveness of ''The Real Cost'' ads.
- Belief and knowledge tracking of ''The Real Cost'' ads.

In addition to the above components, the survey will ask participants to report on tobacco use and other psychographic and demographic items. The time frame that the survey items will ask about for ad awareness (*i.e.,* past 30 days or past week) will depend on several factors, including how long the ad was on air. The survey will take an average of approximately 25 minutes to complete per participant. As the survey items are tested, any irrelevant items will be cut as necessary. Ad creative for both vaping and cigarette products will be assessed; therefore, two similar surveys (one on ENDS-focused ads and one on cigarette-focused ads) will be fielded as appropriate, but not within the same month. In support of the provisions of the Tobacco Control Act that require FDA to protect the public health and to reduce tobacco use by minors, FDA requests OMB approval to collect information to evaluate CTP's public education campaign ''The Real Cost'' through the Monthly Implementation Assessment.

FDA estimates the burden of this collection of information as follows:

TABLE 1—ESTIMATED ANNUAL REPORTING BURDEN [1]

Type of respondent/activity	Number of respondents	Number of responses per respondent	Total responses	Average burden per response	Total hours
Parent/Young Adult Screener	2,688,000	1	2,688,000	0.05 (3 minutes)	134,400
Parent Permission	2,016,000	1	2,016,000	0.05 (3 minutes)	100,800
Youth Screener	2,016,000	1	2,016,000	0.05 (3 minutes)	100,800
Youth Assent	36,000	1	36,000	0.05 (3 minutes)	1,800
Young Adult Consent	12,000	1	12,000	0.05 (3 minutes)	600
Online Survey	48,000	1	48,000	0.42 (25 minutes)	20,160
Invitation Email/Reminder Emails/Thank you Email	48,000	1	48,000	0.42 (25 minutes)	20,160
Total					378,720

[1] There are no capital costs or operating and maintenance costs associated with this collection of information.

Data collection for the Monthly Implementation Assessment will consist of administering a monthly survey to participants aged 12 to 20 over the course of 2 years (24 months). We expect the screening process (3 minutes

per response) to yield an approximate 2.3 to one ratio of eligible participants. We will need to screen approximately 112,000 potential parents and young adults each month (resulting in 2,688,000 screeners) over the study period. Since the eligible age for data collection is 12 to 20 years old, we intend to screen parents of eligible youth, as well as young adults. Parents of the youth participants determined to be eligible through the screener will provide parent permission (3 minutes per response). We estimate that 2,016,000 of the parents who complete the screener will provide their permission for their youth to complete the online survey (approximately 75 percent of the 2,688,000 screened). Eligible youth (2,016,000) will provide their assent (3 minutes per response) to participate in the online survey (25 minutes per response). Participants that are 18 to 20 (19 to 20 in Alabama and Nebraska in accordance with state law) will complete the screener for themselves and provide their consent (3 minutes per response) to participate in the online survey. We estimate that approximately 25 percent of the 48,000 completed surveys will come from young adults aged 18 to 20 (19 to 20 in Alabama and Nebraska).

Over the course of the study period, we intend to survey approximately 2,000 youth and young adults ages 12 to 20 per month for 24 months. From these completed screeners, we estimate that we will obtain data from 36,000 youth and 12,000 young adults. This will give us a total of 48,000 participants for the study. The survey will be repeated with a new cross-sectional sample approximately every month over a period of 24 months; however, some participants will complete more than one wave. These 48,000 respondents will receive an invitation email with a link to take the survey (4 minutes), six reminder emails (3 minutes each), and a thank you email (3 minutes) upon completion of the study for a total of 25 minutes for respondents to read and respond to the emails.

Dated: April 20, 2023.

Lauren K. Roth,

Associate Commissioner for Policy.

[FR Doc. 2023–08945 Filed 4–26–23; 8:45 am]

BILLING CODE 4164–01–P

DEPARTMENT OF HEALTH AND HUMAN SERVICES

Food and Drug Administration

[Docket No. FDA–2023–N–1466]

Good Manufacturing Practices for Cosmetic Products Listening Session; Public Meeting; Request for Comments

AGENCY: Food and Drug Administration, HHS.

ACTION: Notice of public meeting; request for comments.

SUMMARY: The Food and Drug Administration (FDA, the Agency, or we) is announcing a virtual listening session entitled ''Good Manufacturing Practices for Cosmetic Products Listening Session.'' The purpose of the listening session is to consult cosmetics manufacturers, including smaller businesses, consumer organizations, and other experts, to inform Agency efforts to develop regulations to establish good manufacturing practices for facilities that manufacture or process cosmetic products distributed in the United States.

DATES: The virtual listening session will be held on June 1, 2023, from 10 a.m. to 1 p.m. Eastern Daylight Time (EDT) or until after the last public commenter has spoken, whichever occurs first. Submit requests to make oral presentations at the listening session by 6 p.m. EDT, May 18, 2023. Either electronic or written comments on this listening session must be submitted to the docket by July 3, 2023. See the **SUPPLEMENTARY INFORMATION** section for registration date and information.

ADDRESSES: Additional details, such as registration information, are available at *https://www.fda.gov/cosmetics/cosmetics-news-events/public-meeting-good-manufacturing-practices-cosmetic-products-06012023.*

FDA is establishing a public docket for this listening session. You may submit comments as follows. Please note that late, untimely filed comments will not be considered. The *https://www.regulations.gov* electronic filing system will accept comments until 11:59 p.m. EDT at the end of July 3, 2023. Comments received by mail/hand delivery/courier (for written/paper submissions) will be considered timely if they are received on or before that date.

Electronic Submissions

Submit electronic comments in the following way:

- *Federal eRulemaking Portal: https://www.regulations.gov.* Follow the instructions for submitting comments. Comments submitted electronically, including attachments, to *https://www.regulations.gov* will be posted to the docket unchanged. Because your comment will be made public, you are solely responsible for ensuring that your comment does not include any confidential information that you or a third party may not wish to be posted, such as medical information, your or anyone else's Social Security number, or confidential business information, such as a manufacturing process. Please note that if you include your name, contact information, or other information that identifies you in the body of your comments, that information will be posted on *https://www.regulations.gov.*
- If you want to submit a comment with confidential information that you do not wish to be made available to the public, submit the comment as a written/paper submission and in the manner detailed (see ''Written/Paper Submissions'' and ''Instructions'').

Written/Paper Submissions

Submit written/paper submissions as follows:

- *Mail/Hand Delivery/Courier (for written/paper submissions):* Dockets Management Staff (HFA–305), Food and Drug Administration, 5630 Fishers Lane, Rm. 1061, Rockville, MD 20852.
- For written/paper comments submitted to the Dockets Management Staff, FDA will post your comment, as well as any attachments, except for information submitted, marked and identified, as confidential, if submitted as detailed in ''Instructions.''

Instructions: All submissions received must include the Docket No. FDA–2023–N–1466 for ''Good Manufacturing Practices for Cosmetic Products Listening Session.'' Received comments, those filed in a timely manner (see ADDRESSES), will be placed in the docket and, except for those submitted as ''Confidential Submissions,'' publicly viewable at *https://www.regulations.gov* or at the Dockets Management Staff between 9 a.m. and 4 p.m., Monday through Friday, 240–402–7500.

- Confidential Submissions—To submit a comment with confidential information that you do not wish to be made publicly available, submit your comments only as a written/paper submission. You should submit two copies total. One copy will include the information you claim to be confidential with a heading or cover note that states ''THIS DOCUMENT CONTAINS CONFIDENTIAL INFORMATION.'' The Agency will review this copy, including the claimed confidential information, in its consideration of comments. The

second copy, which will have the claimed confidential information redacted/blacked out, will be available for public viewing and posted on *https://www.regulations.gov.* Submit both copies to the Dockets Management Staff. If you do not wish your name and contact information to be made publicly available, you can provide this information on the cover sheet and not in the body of your comments and you must identify this information as ''confidential.'' Any information marked as ''confidential'' will not be disclosed except in accordance with 21 CFR 10.20 and other applicable disclosure law. For more information about FDA's posting of comments to public dockets, see 80 FR 56469, September 18, 2015, or access the information at: *https://www.govinfo.gov/content/pkg/FR-2015-09-18/pdf/2015-23389.pdf.*

Docket: For access to the docket to read background documents or the electronic and written/paper comments received, go to *https://www.regulations.gov* and insert the docket number, found in brackets in the heading of this document, into the ''Search'' box and follow the prompts and/or go to the Dockets Management Staff, 5630 Fishers Lane, Rm. 1061, Rockville, MD 20852, 240–402–7500.

FOR FURTHER INFORMATION CONTACT: Deborah Smegal, Office of Cosmetics and Colors, Center for Food Safety and Applied Nutrition, Food and Drug Administration, 5001 Campus Dr., Rm. 1037 (HFS–125), College Park, MD 20740, 240–402–1130, (this is not a toll-free number), email: *MoCRAGMPMeeting@fda.hhs.gov.*

SUPPLEMENTARY INFORMATION:

I. Background

On December 29, 2022, the President signed the Consolidated Appropriations Act, 2023 (Pub. L. 117–328) into law, which included the Modernization of Cosmetics Regulation Act of 2022 (MoCRA). Among other provisions, MoCRA added section 606 to the Federal Food, Drug, and Cosmetic Act (FD&C Act), requiring FDA to establish by regulation good manufacturing practices (GMPs) for facilities that manufacture or process cosmetic products distributed in the United States. MoCRA specifies that these GMPs are to be consistent, to the extent practicable, and appropriate, with national and international standards, in accordance with section 601 of the FD&C Act (21 U.S.C. 361). Any such regulations shall be intended to protect the public health and ensure that cosmetic products are not adulterated. As required by MoCRA, before issuing rulemaking, FDA must consult with cosmetics manufacturers, including smaller businesses, consumer organizations, and other experts selected by FDA. Further, FDA must take into account the size and scope of the businesses engaged in the manufacture of cosmetics, and the risks to public health posed by such cosmetics and provide sufficient flexibility to be practicable for all sizes and types of facilities to which such regulations will apply. Such regulations must include simplified good manufacturing practice requirements for smaller businesses, as appropriate, to ensure that such regulations do not impose undue economic hardship for smaller businesses and may include longer compliance times for smaller businesses. In addition, MoCRA added section 612 of the FD&C Act, which exempts certain small businesses from the GMP requirements.

FDA issued a draft guidance, entitled ''Draft Guidance for Industry: Cosmetic Good Manufacturing Practices,'' (available at *https://www.fda.gov/regulatory-information/search-fda-guidance-documents/draft-guidance-industry-cosmetic-good-manufacturing-practices*) in 2013. We intend to withdraw or revise and reissue this draft guidance, as appropriate, based on the GMP rulemaking.

II. Topics for Comment

To facilitate input on good manufacturing practices for cosmetic products, FDA has developed a series of topics covering the types of information that we are interested in obtaining. In all cases, FDA encourages stakeholders to provide the specific rationale and basis for their comments, including any available supporting data and information.

Respondents need not reply to all topics listed. Please identify your answers as responses to a specific topic.

Topics Related to Good Manufacturing Practices

1. Identify any national or international standard (*e.g.,* International Organization for Standardization (ISO) standard 22716:2007) and the extent to which it would be practicable for good manufacturing practice regulations for cosmetic products to be consistent with such standard. Please include whether there are specific items in the standard which are perceived to be burdensome or for which a less burdensome alternative exists that would protect the public health and ensure that cosmetic products are not adulterated.

2. Describe what constitutes sufficient flexibility within good manufacturing practices for cosmetic products to ensure regulations are practicable for all sizes and types of facilities to which such practices may apply. Please take into account the size and scope of the businesses engaged in the manufacture of cosmetic products and the risks to public health posed by cosmetic products.

3. Describe what constitutes simplified good manufacturing practices requirements for cosmetic products for smaller businesses to ensure regulations do not impose undue economic hardship.

4. Describe appropriate compliance times for good manufacturing practices regulations.

Topics Related to Economic Impact

5. To what extent are manufacturers of cosmetic products already following a national or international standard for good manufacturing practices? For manufacturers of cosmetic products that are not currently following such a national or international standard, what would it cost to implement good manufacturing practices consistent with such a standard?

6. Please provide reports or examples of adverse events or recalls associated with a cosmetic product that were linked to manufacturing practices. How would implementing good manufacturing practices impact the likelihood of recall of cosmetics products? How would implementing good manufacturing practices impact the likelihood of consumers experiencing adverse events from the use of cosmetics products? How would these impacts differ by type of cosmetic product?

III. Participating in the Listening Session

Registration: To register for the free virtual listening session, please visit the following website: *https://www.fda.gov/cosmetics/cosmetics-news-events/public-meeting-good-manufacturing-practices-cosmetic-products-06012023.* Registration may be performed at any time before or during the listening session.

Information on requests for special accommodations due to a disability will be provided during registration.

Requests to Provide Oral Presentations: During online registration you may indicate if you wish to present during the listening session. Requests to provide public comments during the listening session should be submitted by 6 p.m. EDT, May 18, 2023. We will do our best to accommodate requests to

make public comments. Individuals and organizations with common interests are urged to consolidate or coordinate their presentations, and request time for a joint presentation, or submit requests for designated representatives to participate in the focused sessions. Based on the number of requests we receive, we will determine the amount of time allotted to each presenter (which we expect to be approximately 3 minutes) and the approximate time each oral presentation is to begin. We will select and notify participants at the time of registration, or by May 19, 2023. If selected for presentation, participants must email presentation materials to *MoCRAGMPMeeting@fda.hhs.gov* no later than May 22, 2023, 11:59 p.m. EDT. No commercial or promotional material will be permitted to be presented or distributed at the public workshop.

Streaming Webcast of the Listening Session: This listening session will be webcast. Please register online (as described above). Registrants will receive a hyperlink that provides access to the webcast.

FDA has verified the website addresses in this document, as of the date this document publishes in the **Federal Register,** but websites are subject to change over time.

Transcripts: Please be advised that as soon as a transcript of the listening session is available, it will be accessible at *https://www.regulations.gov.* It may be viewed at the Dockets Management Staff (see **ADDRESSES**).

Dated: April 24, 2023.

Lauren K. Roth,

Associate Commissioner for Policy.

[FR Doc. 2023–08942 Filed 4–26–23; 8:45 am]

BILLING CODE 4164–01–P

DEPARTMENT OF HEALTH AND HUMAN SERVICES

[Document Identifier: OS–0990–0390]

Agency Father Generic Information Collection Request. 30-Day Public Comment Request

AGENCY: Office of the Secretary, Health and Human Service, HHS.

ACTION: Notice and request for comments. Office of the Assistant Secretary for Public Affairs is requesting OMB approval for a new father generic clearance.

SUMMARY: In compliance with the requirement of the Paperwork Reduction Act of 1995, the Office of the Secretary (OS), Department of Health and Human Services, is publishing the following summary of a proposed collection for public comment.

DATES: Comments on the ICR must be received on or before May 29, 2023.

ADDRESSES: Submit your comments to *OIRA_submission@omb.eop.gov* or via facsimile to (202) 395–5806.

FOR FURTHER INFORMATION CONTACT: Sherrette Funn, *Sherrette.Funn@hhs.gov* or (202) 264–0041. When requesting information, please include the document identifier 0990–0390–30D and project title for reference.

SUPPLEMENTARY INFORMATION: Interested persons are invited to send comments regarding this burden estimate or any other aspect of this collection of information, including any of the following subjects: (1) The necessity and utility of the proposed information collection for the proper performance of the agency's functions; (2) the accuracy of the estimated burden; (3) ways to enhance the quality, utility, and clarity of the information to be collected; and (4) the use of automated collection techniques or other forms of information technology to minimize the information collection burden.

Title of the Collection: Challenge and Prize Competition Solicitations.

Type of Collection: Extension OMB No. 0990–0390—Office of the Assistant Secretary for Health (OASH).

Abstract: The Office of the Secretary (OS), Department of Health & Human Services (HHS) requests that the Office of Management and Budget (OMB) approve a request for an extension of generic clearance approval of the information collected for challenge and prize competition solicitations. Burden hours were increased from 333 to 558.3 total burden hours to provide more time for respondents to complete forms that may include more questions.

Challenges and prize competitions enable HHS to tap into the expertise and creativity of the public in new ways as well as extend awareness of HHS programs and priorities. Within HHS, the Office of the Assistant Secretary for Health (OASH) has taken lead responsibility in coordinating challenges and prize competitions and implementing policies regarding the use of these tools. HHS's goal is to engage a broader number of stakeholders who are inspired to work on some of our most pressing health issues, thus supporting a new ecosystem of scientists, developers, and entrepreneurs who can continue to innovate for public health.

The generic clearance is necessary for HHS to launch several challenges or prize competitions annually in a short turnaround. The information collected for these challenges and prize competitions will generally include the submitter's or other contact person's first and last name, organizational affiliation and role in the organization (for identification purposes); email address or other contact information (to follow up if the submitted solution is selected as a finalist or winner); street address (to confirm that the submitter or affiliated organization is located in the United States, for eligibility purposes); information confirming whether the submitter's age is 13 years or older (to ensure compliance with the Children's Online Privacy Protection Act of 1998, 15 U.S.C. 6501–6505 (COPPA)) or 18 years or older (to ensure necessary consents are obtained); and a narrative description of the solution. HHS may also request information indicating the submitter's technical background, educational level, ethnicity, age range, gender, and race (to evaluate entrants' diversity and backgrounds), how the submitter learned about the challenge or prize competition and what the submitter currently understands about the HHS agency hosting the challenge or prize competition (to gauge the effect of the challenge or prize competition on increasing public awareness of HHS programs and priorities, and generally to enable HHS to improve its outreach strategies to ensure a diverse and broad innovator constituency is fostered through the use of challenges and prize competitions). Finally, HHS may ask for additional information tailored to the challenge or prize competition through structured questions. This information will enable HHS to create and administer challenges and prize competitions more effectively.

Upon entry or during the judging process, solvers under the age of 18 will be asked to confirm parental consent, which will require them to obtain and provide a parent or guardian signature in a format outlined in the specific criteria of each challenge or prize competition in order to qualify for the contest. To protect online privacy of minors, birthdate may be required by the website host to ensure the challenge platform meets the requirements of COPPA. Eligibility to win a cash prize will be outlined in the specific criteria of each contest and will only apply to U.S. citizens, permanent residents, or private entities incorporated in and maintaining a primary place of business in the U.S. To administer the cash prize, HHS will need to collect additional relevant payment information—such as Social Security Number and/or Taxpayer ID and information regarding the winners' financial institutions—in

order to comply with financial accounting and income tax reporting processes.

Likely Respondents: Likely respondents include individuals, businesses, and state and local governments who choose to participate in a challenge or prize competition hosted or overseen (*i.e.,* via contract, etc.) by HHS.

ESTIMATED ANNUALIZED BURDEN TABLE

Respondent (if necessary)	Number of respondents	Number of responses per respondent	Average burden per response (hours)	Total burden hours
Individuals or Households	1,500	1	10/60	250
Organizations	750	1	10/60	125
Businesses	1,000	1	10/60	166.7
State, territory, tribal or local governments	100	1	10/60	16.7
Total				558.3

Sherrette A. Funn,

Paperwork Reduction Act Reports Clearance Officer, Office of the Secretary.

[FR Doc. 2023–08898 Filed 4–26–23; 8:45 am]

BILLING CODE 4150–04–P

DEPARTMENT OF HEALTH AND HUMAN SERVICES

[Document Identifier: OS–0990–new]

Agency Information Collection Request. 30-Day Public Comment Request

AGENCY: Office of the Secretary, HHS.

ACTION: Notice.

SUMMARY: In compliance with the requirement of the Paperwork Reduction Act of 1995, the Office of the Secretary (OS), Department of Health and Human Services, is publishing the following summary of a proposed collection for public comment.

DATES: Comments on the ICR must be received on or before May 30, 2023.

ADDRESSES: Written comments and recommendations for the proposed information collection should be sent within 30 days of publication of this notice to *www.reginfo.gov/public/do/PRAMain.* Find this particular information collection by selecting ''Currently under 30-day Review—Open for Public Comments'' or by using the search function.

FOR FURTHER INFORMATION CONTACT: Sherrette Funn, *Sherrette.Funn@hhs.gov* or (202) 264–0041, or *PRA@HHS.GOV.* When submitting comments or requesting information, please include the document identifier 0990–New–30D and project title for reference.

SUPPLEMENTARY INFORMATION: Interested persons are invited to send comments regarding this burden estimate or any other aspect of this collection of information, including any of the following subjects: (1) The necessity and utility of the proposed information collection for the proper performance of the agency's functions; (2) the accuracy of the estimated burden; (3) ways to enhance the quality, utility, and clarity of the information to be collected; and (4) the use of automated collection techniques or other forms of information technology to minimize the information collection burden.

Title of the Collection: Research Complaint Form.

Type of Collection: New.

OMB No.: 0990–new.

Abstract: The Office of the Assistant Secretary for Health, Office for Human Research Protections (OHRP), is requesting a new approval from the Office of Management and Budget of OHRP's Research Complaint Form. This form will provide a simplified standardized format for submitting to OHRP allegations of noncompliance involving human subject research conducted or supported by HHS, which should significantly improve OHRP's capacity to review and process these allegations. The information collected will help OHRP ensure the rights of human subjects involved in such research and that OHRP-assured institutions are complying with the HHS Protection of Human Subjects regulations.

Type of Respondent: IRB members, IRB Administrators, Research Coordinators, and the Public.

ESTIMATED ANNUALIZED BURDEN TABLE

Type of respondent	Number of respondents	Number responses per respondent	Average burden per response (in hours)	Total burden hours
IRB members, IRB Administrators, Research Coordinators, the Public	500	1	30/60	250
IRB members, IRB Administrators, Research Coordinators, the Public	400	2	30/60	400
IRB members, IRB Administrators, Research Coordinators, the Public	100	3	30/60	150
Total				800

Sherrette A. Funn,

Paperwork Reduction Act Reports Clearance Officer, Office of the Secretary.

[FR Doc. 2023–08880 Filed 4–26–23; 8:45 am]

BILLING CODE 4150–36–P

DEPARTMENT OF HEALTH AND HUMAN SERVICES

National Institutes of Health

Eunice Kennedy Shriver National Institute of Child Health and Human Development; Notice of Closed Meeting

Pursuant to section 10(d) of the Federal Advisory Committee Act, as amended, notice is hereby given of a meeting of the Board of Scientific Counselors.

The meeting will be closed to the public as indicated below in accordance with the provisions set forth in section 552b(c)(6), Title 5 U.S.C., as amended for the review, discussion, and evaluation of individual intramural programs and projects conducted by the *Eunice Kennedy Shriver* National Institute of Child Health and Human Development, including consideration of personnel qualifications and performance, and the competence of individual investigators, the disclosure of which would constitute a clearly unwarranted invasion of personal privacy.

Name of Committee: Board of Scientific Counselors.

Date: June 2, 2023.

Time: 10:00 a.m. to 4:45 p.m.

Agenda: To review and evaluate personnel qualifications and performance, and competence of individual investigators.

Place: Eunice Kennedy Shriver National Institute of Child Health and Human Development, National Institutes of Health, 10 Center Drive, Room 10D39 Bethesda, MD 20892 (Virtual Meeting).

Contact Person: Chris J. McBain, Ph.D., Scientific Director, *Eunice Kennedy Shriver* National Institute of Child Health and Human Development, National Institutes of Health, 10 Center Drive, Room 10D39, Bethesda, MD 20892, (301) 594–5984, *mcbainc@mail.nih.gov.*

Any interested person may file written comments with the committee by forwarding the statement to the Contact Person listed on this notice. The statement should include the name, address, telephone number and when applicable, the business or professional affiliation of the interested person.

Information is also available on the Institute's/Center's home page: *https://www.nichd.nih.gov/about/advisory/bsc,* where an agenda and any additional information for the meeting will be posted when available.

(Catalogue of Federal Domestic Assistance Program No. 93.865, Research for Mothers and Children, National Institutes of Health)

Dated: April 21, 2023.

David W. Freeman,

Program Analyst, Office of Federal Advisory Committee Policy.

[FR Doc. 2023–08834 Filed 4–26–23; 8:45 am]

BILLING CODE 4140–01–P

DEPARTMENT OF HEALTH AND HUMAN SERVICES

National Institutes of Health

National Institute of Neurological Disorders and Stroke; Notice of Closed Meetings

Pursuant to section 10(d) of the Federal Advisory Committee Act, as amended, notice is hereby given of the following meetings.

The meetings will be closed to the public in accordance with the provisions set forth in sections 552b(c)(4) and 552b(c)(6), title 5 U.S.C., as amended. The grant applications and the discussions could disclose confidential trade secrets or commercial property such as patentable material, and personal information concerning individuals associated with the grant applications, the disclosure of which would constitute a clearly unwarranted invasion of personal privacy.

Name of Committee: National Institute of Neurological Disorders and Stroke Initial Review Group; Neurological Sciences and Disorders C Study Section Translational Neural, Brain, and Pain Relief Devices (NSD–C).

Date: June 6–7, 2023.

Time: 9:00 a.m. to 5:00 p.m.

Agenda: To review and evaluate grant applications.

Place: Canopy by Hilton, 940 Rose Avenue, North Bethesda, MD 20852.

Contact Person: Ana Olariu, Ph.D., Scientific Review Officer, Scientific Review Branch, Division of Extramural Activities, NINDS/NIH, NSC, 6001 Executive Blvd., Room 3208, MSC 9529, Rockville, MD 20852, 301–496–9223, *Ana.Olariu@nih.gov.*

Name of Committee: National Institute of Neurological Disorders and Stroke Special Emphasis Panel; HEAL Initiative: Team based research review meeting.

Date: June 9, 2023.

Time: 9:00 a.m. to 6:00 p.m.

Agenda: To review and evaluate grant applications and/or proposals.

Place: National Institutes of Health, Neuroscience Center, 6001 Executive Boulevard, Rockville, MD 20852 (Virtual Meeting).

Contact Person: Abhignya Subedi, Ph.D., Scientific Review Officer, Scientific Review Branch, Division of Extramural Activities, NINDS/NIH, 6001 Executive Blvd., Room 3208, MSC 9529, Rockville, MD 20852, 301–480–6938, *abhi.subedi@nih.gov.*

Name of Committee: National Institute of Neurological Disorders and Stroke Special Emphasis Panel; HEAL Initiative: Biomarker review meeting.

Date: June 12, 2023.

Time: 9:00 a.m. to 6:00 p.m.

Agenda: To review and evaluate cooperative agreement applications.

Place: National Institutes of Health, Neuroscience Center, 6001 Executive Boulevard, Rockville, MD 20852 (Virtual Meeting).

Contact Person: Abhignya Subedi, Ph.D., Scientific Review Officer, Scientific Review Branch, Division of Extramural Activities, NINDS/NIH, 6001 Executive Blvd., Room 3208, MSC 9529, Rockville, MD 20852, 301–480–6938, *abhi.subedi@nih.gov.*

(Catalogue of Federal Domestic Assistance Program Nos. 93.853, Clinical Research Related to Neurological Disorders; 93.854, Biological Basis Research in the Neurosciences, National Institutes of Health, HHS.)

Dated: April 24, 2023.

Tyeshia M. Roberson-Curtis,

Program Analyst, Office of Federal Advisory Committee Policy.

[FR Doc. 2023–08903 Filed 4–26–23; 8:45 am]

BILLING CODE 4140–01–P

DEPARTMENT OF HEALTH AND HUMAN SERVICES

National Institutes of Health

National Institute of Nursing Research; Notice of Meeting

Pursuant to section 10(d) of the Federal Advisory Committee Act, as amended, notice is hereby given of a meeting of the National Advisory Council for Nursing Research.

The meeting will be open to the public as indicated below, with attendance limited to space available. Individuals who plan to attend and need special assistance, such as sign language interpretation or other reasonable accommodations, should notify the Contact Person listed below in advance of the meeting. The open session will be videocast and can be accessed from the NIH Videocasting website *https://videocast.nih.gov/watch=49200.*

The meeting will be closed to the public in accordance with the provisions set forth in sections 552b(c)(4) and 552b(c)(6), Title 5 U.S.C., as amended. The grant applications and the discussions could disclose confidential trade secrets or commercial property such as patentable material, and personal information concerning individuals associated with the grant applications, the disclosure of which would constitute a clearly unwarranted invasion of personal privacy.

Name of Committee: National Advisory Council for Nursing Research.

Date: May 23, 2023.

Open: 10:00 a.m. to 12:30 p.m.

Agenda: Call to Order and Opening Remarks; NINR Director's Report; NINR DEIA Update; The Digital NIH strategy and a glimpse at ChatGPT.

Open: 1:00 p.m. to 2:00 p.m.

Agenda: ScHARe: Science Collaborative for Health disparities and Artificial intelligence bias Reduction; IDeA: NIH Institutional

Development Award Program; Council Open Discussion.

Place: National Institutes of Health, Building 31, C-Wing, Sixth Floor, Conference Rooms F & G, 31 Center Drive, Bethesda, MD 20892, *https://videocast.nih.gov/watch=49200* (Hybrid Meeting).

Closed: 2:15 p.m. to 3:00 p.m.

Agenda: To review and evaluate grant applications.

Place: National Institutes of Health, Building 31, C-Wing, Sixth Floor Conference Rooms F & G, 31 Center Drive, Bethesda, MD 20892.

Contact Person: Elizabeth Tarlov, Ph.D., RN, Director, Division of Extramural Science Programs (DESP), National Institute of Nursing Research, Bethesda, MD 20892, (301) 594–1580, *elizabeth.tarlov@nih.gov.*

Any interested person may file written comments with the committee by forwarding the statement to the Contact Person listed on this notice. The statement should include the name, address, telephone number and when applicable, the business or professional affiliation of the interested person.

In the interest of security, NIH has procedures at *https://www.nih.gov/about-nih/visitor-information/campus-access-security* for entrance into on-campus and off-campus facilities. All visitor vehicles, including taxicabs, hotel, and airport shuttles will be inspected before being allowed on campus. Visitors attending a meeting on campus or at an off-campus federal facility will be asked to show one form of identification (for example, a government-issued photo ID, driver's license, or passport) and to state the purpose of their visit.

Information is also available on the Institute's/Center's home page: *https://www.ninr.nih.gov/aboutninr/nacnr,* where an agenda and any additional information for the meeting will be posted when available.

(Catalogue of Federal Domestic Assistance Program Nos. 93.361, Nursing Research, National Institutes of Health, HHS)

Dated: April 21, 2023.

David W. Freeman,

Program Analyst, Office of Federal Advisory Committee Policy.

[FR Doc. 2023–08833 Filed 4–26–23; 8:45 am]

BILLING CODE 4140–01–P

DEPARTMENT OF HOMELAND SECURITY

U.S. Customs and Border Protection

[1651–0080]

Deferral of Duty on Large Yachts Imported for Sale

AGENCY: U.S. Customs and Border Protection (CBP), Department of Homeland Security.

ACTION: 30-Day notice and request for comments; extension of an existing collection of information.

SUMMARY: The Department of Homeland Security, U.S. Customs and Border Protection will be submitting the following information collection request to the Office of Management and Budget (OMB) for review and approval in accordance with the Paperwork Reduction Act of 1995 (PRA). The information collection is published in the **Federal Register** to obtain comments from the public and affected agencies.

DATES: Comments are encouraged and must be submitted (no later than May 30, 2023) to be assured of consideration.

ADDRESSES: Written comments and/or suggestions regarding the item(s) contained in this notice should be sent within 30 days of publication of this notice to *www.reginfo.gov/public/do/PRAMain.* Find this particular information collection by selecting ''Currently under 30-day Review—Open for Public Comments'' or by using the search function.

FOR FURTHER INFORMATION CONTACT: Requests for additional PRA information should be directed to Seth Renkema, Chief, Economic Impact Analysis Branch, U.S. Customs and Border Protection, Office of Trade, Regulations and Rulings, 90 K Street NE, 10th Floor, Washington, DC 20229–1177, telephone number 202–325–0056 or via email *CBP_PRA@cbp.dhs.gov.* Please note that the contact information provided here is solely for questions regarding this notice. Individuals seeking information about other CBP programs should contact the CBP National Customer Service Center at 877–227–5511, (TTY) 1–800–877–8339, or CBP website at *https://www.cbp.gov/.*

SUPPLEMENTARY INFORMATION: CBP invites the general public and other Federal agencies to comment on the proposed and/or continuing information collections pursuant to the Paperwork Reduction Act of 1995 (44 U.S.C. 3501 *et seq.*). This proposed information collection was previously published in the **Federal Register** (88 FR 9890) on February 15, 2023, allowing for a 60-day comment period. This notice allows for an additional 30 days for public comments. This process is conducted in accordance with 5 CFR 1320.8. Written comments and suggestions from the public and affected agencies should address one or more of the following four points: (1) whether the proposed collection of information is necessary for the proper performance of the functions of the agency, including whether the information will have practical utility; (2) the accuracy of the agency's estimate of the burden of the proposed collection of information, including the validity of the methodology and assumptions used; (3) suggestions to enhance the quality, utility, and clarity of the information to be collected; and (4) suggestions to minimize the burden of the collection of information on those who are to respond, including through the use of appropriate automated, electronic, mechanical, or other technological collection techniques or other forms of information technology, *e.g.,* permitting electronic submission of responses. The comments that are submitted will be summarized and included in the request for approval. All comments will become a matter of public record.

Overview of This Information Collection

Title: Deferral of Duty on Large Yachts Imported for Sale.

OMB Number: 1651–0080.

Form Number: N/A.

Current Actions: CBP proposes to extend the expiration date of this information collection with no change to the estimated burden hours or to the information collected.

Type of Review: Extension (without change).

Affected Public: Businesses and Individuals.

Abstract: This collection of information is required to ensure compliance with 19 U.S.C. 1484b, which provides that an otherwise dutiable yacht that exceeds 79 feet in length, is used primarily for recreation or pleasure, and had been previously sold by a manufacturer or dealer to a retail customer, may be imported without the payment of duty if the yacht is imported with the intention to offer it for sale at a boat show in the United States. The statute provides for the deferral of payment of duty until the yacht is sold but specifies that the duty deferral period may not exceed 6 months. This collection of information is provided for by 19 CFR 4.94a and 19 CFR 4.95, which requires the submission of information to CBP such as the name and address of the owner of the yacht, the dates of cruising in the waters of the United States, information about the yacht, and the ports of arrival and departure.

Type of Information Collection: Deferral of Duty on Large Yachts Imported for Sale.

Estimated Number of Respondents: 50.

Estimated Number of Annual Responses per Respondent: 1.

Estimated Number of Total Annual Responses: 50.

Estimated Time per Response: 1 hour.

Estimated Total Annual Burden Hours: 50 hours.

Dated: April 24, 2023.

Seth D. Renkema,

Branch Chief, Economic Impact Analysis Branch, U.S. Customs and Border Protection.

[FR Doc. 2023–08882 Filed 4–26–23; 8:45 am]

BILLING CODE 9111–14–P

DEPARTMENT OF HOMELAND SECURITY

U.S. Customs and Border Protection

[1651–0NEW]

Death Gratuity Information Sheet

AGENCY: U.S. Customs and Border Protection (CBP), Department of Homeland Security.

ACTION: 30-Day notice and request for comments; a new collection of information.

SUMMARY: The Department of Homeland Security, U.S. Customs and Border Protection will be submitting the following information collection request to the Office of Management and Budget (OMB) for review and approval in accordance with the Paperwork Reduction Act of 1995 (PRA). The information collection is published in the **Federal Register** to obtain comments from the public and affected agencies.

DATES: Comments are encouraged and must be submitted (no later than May 30, 2023) to be assured of consideration.

ADDRESSES: Written comments and/or suggestions regarding the item(s) contained in this notice should be sent within 30 days of publication of this notice to *www.reginfo.gov/public/do/PRAMain.* Find this particular information collection by selecting ''Currently under 30-day Review—Open for Public Comments'' or by using the search function.

FOR FURTHER INFORMATION CONTACT: Requests for additional PRA information should be directed to Seth Renkema, Chief, Economic Impact Analysis Branch, U.S. Customs and Border Protection, Office of Trade, Regulations and Rulings, 90 K Street NE, 10th Floor, Washington, DC 20229–1177, Telephone number 202–325–0056 or via email *CBP_PRA@cbp.dhs.gov.* Please note that the contact information provided here is solely for questions regarding this notice. Individuals seeking information about other CBP programs should contact the CBP National Customer Service Center at 877–227–5511, (TTY) 1–800–877–8339, or CBP website at *https://www.cbp.gov/.*

SUPPLEMENTARY INFORMATION: CBP invites the general public and other Federal agencies to comment on the proposed and/or continuing information collections pursuant to the Paperwork Reduction Act of 1995 (44 U.S.C. 3501 *et seq.*). This proposed information collection was previously published in the **Federal Register** (87 FR 55016) on September 08, 2022, allowing for a 60-day comment period. This notice allows for an additional 30 days for public comments. This process is conducted in accordance with 5 CFR 1320.8. Written comments and suggestions from the public and affected agencies should address one or more of the following four points: (1) whether the proposed collection of information is necessary for the proper performance of the functions of the agency, including whether the information will have practical utility; (2) the accuracy of the agency's estimate of the burden of the proposed collection of information, including the validity of the methodology and assumptions used; (3) suggestions to enhance the quality, utility, and clarity of the information to be collected; and (4) suggestions to minimize the burden of the collection of information on those who are to respond, including through the use of appropriate automated, electronic, mechanical, or other technological collection techniques or other forms of information technology, *e.g.,* permitting electronic submission of responses. The comments that are submitted will be summarized and included in the request for approval. All comments will become a matter of public record.

Overview of This Information Collection

Title: Death Gratuity Information Sheet.

OMB Number: 1651–0NEW.

Form Number: N/A.

Current Actions: New collection of information.

Type of Review: New collection of information.

Affected Public: Individuals/households.

Abstract: When the U.S. Customs and Border Protection (CBP) Commissioner has made the determination that the death of a CBP employee is to be classified as a line-of-duty death (LODD), a Death Gratuity (DG) may become payable to the personal representative of the deceased. After the LODD determination is made, CBP will send the potential personal representative of the deceased a DG Information Sheet. This information sheet aids the involved CBP offices in establishing who the personal representative of the deceased is, approving DG, and subsequently, getting the payment paid to the correct person after CBP Commissioner approval.

Potential personal representatives are provided by/from the deceased CBP employee, through their executed beneficiary forms. However, if there are no beneficiary forms on file, next of kin will be identified via the emergency contact information listed with the agency for that employee in WebTele. Potential personal representatives will be required to provide the following data elements on the DG information sheet:

- Name of Deceased CBP Employee
- Date of Death
- Location of Death
- Name of Claimant/personal representative
- Address of Claimant/personal representative (for payment)
- Phone Number and Email Address of Claimant/personal representative
- Relationship to Employee (*i.e.,* spouse, child, parent, etc.)
- If spouse, date of marriage
- If child or parent, date of birth
- First page of will, if applicable
- Contact information for Executor of Estate, if applicable
- Copy of Marriage Certificate, if applicable
- Copy of Letters of Administration, if applicable

CBP is authorized to collect the information requested on this form pursuant to Public Law 104–208 which allows the agency to pay a DG in some situations of LODD. 110 Stat. 3009–368, Sept. 30, 1996; 5 U.S.C. 8133 note. In order to make this payment, CBP must first identify and obtain the information from the personal representative so it can be known where and to whom the payment should be sent. CBP Retirement and Benefits Advisory Services (RABAS) has the authority designated by the Office of Personnel Management (OPM) to provide retirement, benefits, and survivor counselling and processing. This authority is outlined in detail in the Civil Service Retirement System/Federal Employee Retirement System (CSRS/FERS) Handbook, Federal Employees Group Life Insurance (FEGLI) Handbook, and Federal Employee Health Benefits (FEHB) Handbook.

Type of Information Collection: Death Gratuity Information Sheet.

Estimated Number of Respondents: 33.

Estimated Number of Annual Responses per Respondent: 1.

Estimated Number of Total Annual Responses: 33.

Estimated Time per Response: 15 minutes.

Estimated Total Annual Burden Hours: 8.

Dated: April 24, 2023.

Seth D. Renkema,

Branch Chief, Economic Impact Analysis Branch, U.S. Customs and Border Protection.

[FR Doc. 2023–08881 Filed 4–26–23; 8:45 am]

BILLING CODE 9111–14–P

DEPARTMENT OF HOMELAND SECURITY

U.S. Customs and Border Protection

[1651–0093]

Declaration of Owner and Declaration of Consignee When Entry Is Made by an Agent

AGENCY: U.S. Customs and Border Protection (CBP), Department of Homeland Security.

ACTION: 30-Day notice and request for comments; extension of an existing collection of information.

SUMMARY: The Department of Homeland Security, U.S. Customs and Border Protection will be submitting the following information collection request to the Office of Management and Budget (OMB) for review and approval in accordance with the Paperwork Reduction Act of 1995 (PRA). The information collection is published in the **Federal Register** to obtain comments from the public and affected agencies.

DATES: Comments are encouraged and must be submitted (no later than May 30, 2023) to be assured of consideration.

ADDRESSES: Written comments and/or suggestions regarding the item(s) contained in this notice should be sent within 30 days of publication of this notice to *www.reginfo.gov/public/do/PRAMain.* Find this particular information collection by selecting ''Currently under 30-day Review—Open for Public Comments'' or by using the search function.

FOR FURTHER INFORMATION CONTACT: Requests for additional PRA information should be directed to Seth Renkema, Chief, Economic Impact Analysis Branch, U.S. Customs and Border Protection, Office of Trade, Regulations and Rulings, 90 K Street NE, 10th Floor, Washington, DC 20229–1177, telephone number 202–325–0056 or via email *CBP_PRA@cbp.dhs.gov.* Please note that the contact information provided here is solely for questions regarding this notice. Individuals seeking information about other CBP programs should contact the CBP National Customer Service Center at 877–227–5511, (TTY) 1–800–877–8339, or CBP website at *https://www.cbp.gov/.*

SUPPLEMENTARY INFORMATION: CBP invites the general public and other Federal agencies to comment on the proposed and/or continuing information collections pursuant to the Paperwork Reduction Act of 1995 (44 U.S.C. 3501 *et seq.*). This proposed information collection was previously published in the **Federal Register** (88 FR 9889) on February 15, 2023, allowing for a 60-day comment period. This notice allows for an additional 30 days for public comments. This process is conducted in accordance with 5 CFR 1320.8. Written comments and suggestions from the public and affected agencies should address one or more of the following four points: (1) whether the proposed collection of information is necessary for the proper performance of the functions of the agency, including whether the information will have practical utility; (2) the accuracy of the agency's estimate of the burden of the proposed collection of information, including the validity of the methodology and assumptions used; (3) suggestions to enhance the quality, utility, and clarity of the information to be collected; and (4) suggestions to minimize the burden of the collection of information on those who are to respond, including through the use of appropriate automated, electronic, mechanical, or other technological collection techniques or other forms of information technology, *e.g.,* permitting electronic submission of responses. The comments that are submitted will be summarized and included in the request for approval. All comments will become a matter of public record.

Overview of This Information Collection

Title: Declaration of Owner and Declaration of Consignee When Entry is made by an Agent.

OMB Number: 1651–0093.

Form Number: CBP Form 3347, 3347A.

Current Actions: CBP proposes to extend the expiration date of this information collection with no change to the estimated burden hours or to the information collected.

Type of Review: Extension (without change).

Affected Public: Businesses and Individuals.

Abstract: CBP Form 3347, *Declaration of Owner,* is a declaration from the owner of imported merchandise stating that he/she agrees to pay additional and increased duties, therefore releasing the importer of record from paying such duties. This form must be filed within 90 days after the date of entry. CBP Form 3347 is provided for by 19 CFR 24.11 and 141.20.

When entry is made in a consignee's name by an agent who has knowledge of the facts and who is authorized under a proper power of attorney by that consignee, a declaration from the consignee on CBP Form 3347A, *Declaration of Consignee When Entry is Made by an Agent,* shall be filed with the entry documentation or entry summary. If this declaration is filed, then no bond to produce a declaration of the consignee is required. CBP Form 3347A is provided for by 19 CFR 141.19(b)(2).

CBP Forms 3347 and 3347A are authorized by 19 U.S.C. 1485(d) and are accessible at *http://www.cbp.gov/newsroom/publications/forms.*

Type of Information Collection: Declaration of Owner (Form 3347).

Estimated Number of Respondents: 900.

Estimated Number of Annual Responses per Respondent: 6.

Estimated Number of Total Annual Responses: 5,400.

Estimated Time per Response: 6 minutes.

Estimated Total Annual Burden Hours: 540.

Type of Information Collection: Declaration of Importer Form (3347A).

Estimated Number of Respondents: 50.

Estimated Number of Annual Responses per Respondent: 6.

Estimated Number of Total Annual Responses: 300.

Estimated Time per Response: 6 minutes.

Estimated Total Annual Burden Hours: 30.

Dated: April 24, 2023.

Seth D. Renkema,

Branch Chief, Economic Impact Analysis Branch, U.S. Customs and Border Protection.

[FR Doc. 2023–08883 Filed 4–26–23; 8:45 am]

BILLING CODE 9111–14–P

DEPARTMENT OF HOMELAND SECURITY

[Docket No. CISA–2023–0001]

Agency Information Collection Activities: Request for Comment on Secure Software Development Attestation Common Form

AGENCY: Cybersecurity and Infrastructure Security Agency (CISA), Department of Homeland Security (DHS).

ACTION: 60-Day notice and request for comments; new collection (request for a new OMB control number).

SUMMARY: In accordance with the requirements of the Paperwork Reduction Act (PRA) of 1995, the Cybersecurity and Infrastructure Security Agency (CISA) of the Department of Homeland Security (DHS), is soliciting public comment on a self-attestation form to be used by software producers in accordance with the Executive Order on Improving the Nation's Cybersecurity and the Office of Management and Budget's guidance in OMB M–22–18, *Enhancing the Security of the Software Supply Chain through Secure Software Development Practices.* In accordance with OMB M–22–18, Section III.C, CISA has agreed to serve as steward for this collection. After obtaining and considering public comment, CISA will prepare the submission requesting clearance of this collection as a Common Form to permit other agencies beyond DHS to use this form in order to streamline the information collection process in coordination with OMB.

DATES: Comments are encouraged and will be accepted until June 26, 2023.

ADDRESSES: You may submit comments, identified by docket number Docket # CISA–2023–0001, at:

○ *Federal eRulemaking Portal: https://www.regulations.gov.* Please follow the instructions for submitting comments.

Instructions: All submissions received must include the agency name and docket number Docket # CISA–2023–0001. All comments received will be posted without change to *https://www.regulations.gov,* including any contact information provided.

Docket: For access to the docket to read background documents or comments received, go to *https://www.regulations.gov.*

SUPPLEMENTARY INFORMATION:

I. Background

In response to incidents such as the Colonial Pipeline and Solar Winds attacks, on May 12, 2021, President Biden signed E.O. 14028,[1] Improving the Nation's Cybersecurity. This order outlines over 55 actions. This Executive order addresses seven key points:

- Remove barriers to cyber threat information sharing between government and the private sector
- Modernize and implement more robust cybersecurity standards in the Federal Government
- Improve software supply chain security
- Establish a Cybersecurity Safety Review Board
- Create a standard playbook for responding to cyber incidents
- Improve detection of cybersecurity incidents on Federal Government networks
- Improve investigative and remediation capabilities

Section 4, Enhancing Software Supply Chain Security, observed, ''The development of commercial software often lacks transparency, sufficient focus on the stability of the software to resist attack, and adequate controls to prevent tampering by malicious actors.'' To address these concerns, the Executive order required the National Institute of Standards and Technology (NIST) to issue guidance including standards, procedures, or criteria to strengthen the security of the software supply chain.

To put this guidance into practice, the Executive order, through the Office of Management and Budget (OMB), requires agencies to only use software provided by software producers who can attest to complying with Federal Government-specified secure software development practices, as described in NIST Special Publication (SP) 800–218 Secure Software Development Framework.[2] OMB implemented this requirement through OMB memorandum M–22–18 dated September 14, 2022.[3] Specifically, M–22–18 requires agencies to ''obtain a self-attestation from the software producer before using the software.'' This requirement applies to new software developed after the date of memo issuance (September 14, 2022) as well as existing software that is modified by major version changes after the date of memo issuance. OMB M–22–18 brings into existence a new and sizeable conformity assessment community. The memorandum introduces conformity assessment expectations and activities for the supply chain starting with the software producer and ending with the federal agency putting the software in to use. CISA's common self-attestation form does not preclude agencies from adding agency-specific requirements to the minimum requirements in CISA's common self-attestation form. However, any agency specific attestation requirements, modification and/or supplementation of these common forms will require clearance by OMB/OIRA under the PRA process and are not covered by this notice.

II. Invitation to Comment

The following analysis of the burden associated with this proposed information collection is specific to DHS as the agency sponsoring the common form. For the purposes of estimating the number of respondents, DHS has made the following assumptions and welcomes comments on all assumptions.

1. DHS is assuming vendors would have 2,689 initial form submissions and 1,345 resubmissions of the form, due to major software changes, per year. This estimate applies across DHS, including all component agencies. DHS based this estimate on initial contract award data for Fiscal Years 2019 through 2022 from DHS's Federal Procurement Data System (FPDS). DHS utilized data for contract awards that could, in the future, include a response to this collection based on FPDS Product and Service Code (PSC) of ''D'' Automatic Data Processing and Telecommunication and ''R'' Professional, Administrative and Management Support.

Time burden for the attestation form includes time to review the form and understand requirements, gather information, review, and approve the release of information and submission. DHS assumes a three-hour burden per initial submission[4] for a software quality assurance analyst or tester and an additional 20 minutes per initial submission for a Chief Information Security Officer (CISO). Vendors would have to resubmit the attestation form for major software changes, and DHS assumes half the number of initial submissions will result in a resubmission. DHS assumes that resubmissions would take 1 hour and 30 minutes for a software quality assurance analyst or tester and retains 20 minutes for a CISO. DHS acknowledges the information collection request allows for a vendor to use a prior submitted form for multiple agencies. DHS welcomes public comment on how frequently this might happen and how

[1] 86 FR 26633, available at *https://www.federalregister.gov/documents/2021/05/17/2021-10460/improving-the-nations-cybersecurity.*

[2] Nat'l. Institute of Standards & Tech., SP 800–218, Secure Software Development Framework (SSDF) Version 1.1 (2002), available at *https://csrc.nist.gov/publications/detail/sp/800-218/final.*

[3] Off. of Mgmt. & Budget, Exec. Off. of the President, M–22–18, Enhancing the Security of the Software Supply Chain through Secure Software Development Practices (2022), available at *https://www.whitehouse.gov/wp-content/uploads/2022/09/M-22-18.pdf.*

[4] DHS based the estimated 3 hours on an information collection request related to contractor information security for certain telecommunications and video surveillance services or equipment. While not exactly the same requirements or scope, DHS found the burdens of 0199 collection to be similar to the burden in this proposed new collection. For more information, see Supporting Statement for OMB Control Number 9000–0199. *https://www.reginfo.gov/public/do/PRAView Document?ref_nbr=202009-9000-002.*

to reduce respondent burdens due to this collection, where feasible.

To estimate opportunity costs, DHS uses an hourly compensation rate of $67.90 for a software quality assurance analyst or tester and $177.66 for a CISO.[5] DHS estimates software quality assurance analyst or tester annual hours would be 10,084 for initial and resubmissions by multiplying $67.90 compensation rate to estimate the opportunity cost of $684,733. DHS estimates CISO annual hourly burden of 1,345 hours and multiplying $177.66 compensation rate to a CISO estimate the opportunity cost of $238,890. DHS combines these two opportunity costs to calculate a total opportunity cost for the collection of $923,623.

2. DHS is assuming if a vendor needs to provide any additional attestation artifacts or documentation, including a Software Bill of Materials (SBOMs), that this information would be readily available and would not have to be generated specifically for doing business with the government. DHS is interested in comments on the burden and costs if SBOMs or additional artifacts materials need to be generated or reformatted to fulfill an agency/component request.

3. For the purposes of this initial collection, DHS is proposing the common form be a fillable/fileable PDF form. Vendors could access the form on the DHS/CISA website and submit via the DHS website OR email the completed form to *CSCRM_PMO@cisa.dhs.gov.* Other agencies will be required to seek approval to use the common form by submitting their agency-specific burden and cost analyses to OMB.

Input is requested on any aspect of the proposed common form including the instructions. DHS/CISA is particularly interested in

1. If the proposed collection of information to implement requirements of both the E.O. and the OMB guidance will have practical utility;

2. If DHS has accurately estimated the burden of the proposed collection of information, including the validity of the methodology and assumptions used;

3. Other ways for DHS to enhance the quality, utility, and clarity of the information to be collected; and

4. How DHS could minimize the burden of the collection of information on those who are to respond, including through the use of appropriate automated, electronic, mechanical, or other technological collection techniques or other forms of information technology, *e.g.,* permitting electronic submissions of responses.

Analysis

Agency: Cybersecurity and Infrastructure Security Agency (CISA), Department of Homeland Security (DHS).

Title: Secure Software Development Attestation.

OMB Control Number: [Insert DHS/CISA 4 Digit Prefix Then XXX].

Type of Review: Request for a new OMB Control Number, New Common Form.

Expiration Date of Approval: Not Applicable.

Frequency: Annually.

Affected Public: Business—Software Producers.

Estimated Number of Respondents: 2,689.

Estimated Number of Responses per Respondent: 1.5.

Estimated Number of Responses: 4,034.

Estimated Time for Initial Submission per Respondent: 3 hours and 20 minutes.

Estimated Time for Resubmission per Respondent: 1 hour and 50 minutes.

Total Annualized Burden Hours for Initial Submissions: 8,963 hours.

Total Annualized Burden Hours for Resubmissions: 2,466 hours.

Total Annualized Burden Hours: 11,429 hours.

Total Annualized Respondent Opportunity Cost: $923,623.

Robert J. Costello,

Chief Information Officer, Department of Homeland Security, Cybersecurity and Infrastructure Security Agency.

[FR Doc. 2023–08823 Filed 4–26–23; 8:45 am]

BILLING CODE 9110–9P–P

[5] DHS uses wage estimates based on Bureau of Labor Statistics (BLS) Occupational Employment Statistics (OES). Within NAICS industry 541500—Computer Systems Design and Related Services, DHS uses mean hourly wage rates for Software Quality Assurance Analysts and Testers (SOC 15–1253) at $47.09 and Chief Executives (11–1011) at $123.21. DHS applies a compensation factor of 1.44191 based on total hourly compensation of $67.64 divided by $46.91 wages/salaries for Private Industry Workers Management, Professional, and Related Occupations Sources: *https://www.bls.gov/oes/2021/may/naics4_541500.htm* (BLS, OES: May 2021 National Industry Specific Occupational Employment and Wage Estimates.) BLS, Employer Cost for Employment Compensation (ECEC Table 4)): *https://www.bls.gov/news.release/archives/ecec_03172023.htm* (released March 17, 2023).

DEPARTMENT OF THE INTERIOR

Fish and Wildlife Service

[Docket No. FWS–R4–ES–2023–0060; FXES11140400000–234–FF04EF4000]

Receipt of Incidental Take Permit Application and Proposed Habitat Conservation Plan for the Sand Skink; Orange County, FL; Categorical Exclusion

AGENCY: Fish and Wildlife Service, Interior.

ACTION: Notice of availability; request for comments and information.

SUMMARY: We, the Fish and Wildlife Service (Service), announce receipt of an application from Ashton Orlando Residential, LLC (applicant; Lake Dennis project) for an incidental take permit (ITP) under the Endangered Species Act. The applicant requests the ITP to take the federally listed sand skink (*Neoseps reynoldsi*) incidental to the construction of a residential development in Orange County, Florida. We request public comment on the application, which includes the applicant's proposed habitat conservation plan (HCP), and on the Service's preliminary determination that the proposed permitting action may be eligible for a categorical exclusion pursuant to the Council on Environmental Quality's National Environmental Policy Act (NEPA) regulations, the Department of the Interior's (DOI) NEPA regulations, and the DOI Departmental Manual. To make this preliminary determination, we prepared a draft environmental action statement and low-effect screening form, both of which are also available for public review. We invite comment from the public and local, State, Tribal, and Federal agencies.

DATES: We must receive your written comments on or before May 30, 2023.

ADDRESSES:

Obtaining Documents: You may obtain copies of the documents online in Docket No. FWS–R4–ES–2023–0060; at *https://www.regulations.gov.*

Submitting Comments: If you wish to submit comments on any of the documents, you may do so in writing by one of the following methods:

- *Online: https://www.regulations.gov.* Follow the instructions for submitting comments on Docket No. FWS–R4–ES–2023–0060;
- *U.S. Mail:* Public Comments Processing, Attn: Docket No. FWS–R4–ES–2023–0060; U.S. Fish and Wildlife Service, MS: PRB/3W, 5275 Leesburg Pike, Falls Church, VA 22041–3803.

FOR FURTHER INFORMATION CONTACT: Erin Gawera, by U.S. mail (see **ADDRESSES**), by telephone at 904–731–3121 or via email at *erin_gawera@fws.gov.* Individuals in the United States who are deaf, deafblind, hard of hearing, or have a speech disability may dial 711 (TTY, TDD, or TeleBraille) to access telecommunications relay services. Individuals outside the United States should use the relay services offered within their country to make international calls to the point-of-contact in the United States.

SUPPLEMENTARY INFORMATION: We, the Fish and Wildlife Service (Service), announce receipt of an application from Ashton Orlando Residential, LLC (applicant; Lake Dennis project) for an incidental take permit (ITP) under the Endangered Species Act of 1973, as amended (ESA; 16 U.S.C. 1531 *et seq.*). The applicant requests the ITP to take the federally listed sand skink (*Neoseps reynoldsi*) (skink) incidental to the construction and operation of a residential development in Orange County, Florida. We request public comment on the application, which includes the applicant's habitat conservation plan (HCP), and on the Service's preliminary determination that this proposed ITP qualifies as ''low effect,'' and may qualify for a categorical exclusion pursuant to the Council on Environmental Quality's National Environmental Policy Act (NEPA) regulations (40 CFR 1501.4), the Department of the Interior (DOI) NEPA regulations (43 CFR 46), and the DOI Departmental Manual (516 DM 8.5(C)(2)). To make this preliminary determination, we prepared a draft environmental action statement and low-effect screening form, both of which are also available for public review.

Proposed Project

The applicant requests a 5-year ITP to take skinks via the conversion of approximately 4.90 acres (ac) of occupied nesting, foraging, and sheltering skink habitat incidental to the construction and operation of a residential development on a 45.19-ac parcel in Section 18, Township 24 South, Range 27 East, Orange County, Florida. The applicant proposes to mitigate for take of the skinks by purchasing credits equivalent to 9.80 ac of skink-occupied habitat within the Lake Wales Ridge Conservation Bank or another Service-approved conservation bank. The Service would require the applicant to purchase the credits prior to engaging in any construction phase of the project.

Public Availability of Comments

Before including your address, phone number, email address, or other personal identifying information in your comment, be aware that your entire comment, including your personal identifying information, may be made available to the public. While you may request that we withhold your personal identifying information, we cannot guarantee that we will be able to do so.

Our Preliminary Determination

The Service has made a preliminary determination that the applicant's proposed project—including the construction of multiple single-family residences, driveways, parking spaces, green areas, stormwater ponds, and associated infrastructure (*e.g.,* electric, water, and sewer lines)—would individually and cumulatively have a minor effect on the human environment. We have preliminarily determined that the proposed ESA section 10(a)(1)(B) permit would be a ''low-effect'' ITP that individually or cumulatively would have a minor effect on the sand skink and may qualify for application of a categorical exclusion pursuant to the Council on Environmental Quality's NEPA regulations (40 CFR 1501.4), DOI's NEPA regulations, and the DOI Departmental Manual (516 DM 8.5(C)(2)). A ''low-effect'' incidental take permit is one that would result in (1) minor or negligible effects on species covered in the HCP; (2) nonsignificant effects on the human environment; and (3) impacts that, when added together with the impacts of other past, present, and reasonably foreseeable actions, would not result in significant cumulative effects to the human environment.

Next Steps

The Service will evaluate the application and the comments to determine whether to issue the requested permit. We will also conduct an intra-Service consultation pursuant to section 7 of the ESA to evaluate the effects of the proposed take. After considering the preceding and other matters, we will determine whether the permit issuance criteria of section 10(a)(1)(B) of the ESA have been met. If met, the Service will issue ITP number PER 0055690 to Ashton Orlando Residential, LLC.

Authority

The Service provides this notice under section 10(c) of the Endangered Species Act (16 U.S.C. 1531 *et seq.*) and its implementing regulations (50 CFR 17.32) and the National Environmental Policy Act (42 U.S.C. 4321 *et seq.*) and its implementing regulations (40 CFR 1500–1508 and 43 CFR 46).

Robert L. Carey,

Division Manager, Environmental Review, Florida Ecological Services Office.

[FR Doc. 2023–08918 Filed 4–26–23; 8:45 am]

BILLING CODE 4333–15–P

DEPARTMENT OF THE INTERIOR

Fish and Wildlife Service

[FWS–R8–ES–2023–N040; FXES11130800000–234–FF08E00000]

Endangered and Threatened Species; Receipt of Recovery Permit Applications

AGENCY: Fish and Wildlife Service, Interior.

ACTION: Notice of receipt of permit applications; request for comments.

SUMMARY: We, the U.S. Fish and Wildlife Service, have received applications for permits to conduct activities intended to enhance the propagation or survival of endangered or threatened species under the Endangered Species Act. We invite the public and local, State, Tribal, and Federal agencies to comment on these applications. Before issuing any of the requested permits, we will take into consideration any information that we receive during the public comment period.

DATES: We must receive your written comments on or before May 30, 2023.

ADDRESSES:

Document availability and comment submission: Submit requests for copies of the applications and related documents and submit any comments by one of the following methods. All requests and comments should specify the applicant name(s) and application number(s) (*e.g.,* XXXXXX or PER0001234).

- *Email: permitsR8ES@fws.gov.*
- *U.S. Mail:* Susie Tharratt, Regional Recovery Permit Coordinator, U.S. Fish and Wildlife Service, 2800 Cottage Way, Room W–2606, Sacramento, CA 95825.

FOR FURTHER INFORMATION CONTACT: Susie Tharratt, via phone at 916–414–6561, or via email at *permitsR8ES@fws.gov.* Individuals in the United States who are deaf, deafblind, hard of hearing, or have a speech disability may dial 711 (TTY, TDD, or TeleBraille) to access telecommunications relay services. Individuals outside the United States should use the relay services offered within their country to make international calls to the point-of-contact in the United States.

SUPPLEMENTARY INFORMATION: We, the U.S. Fish and Wildlife Service, invite the public to comment on applications for permits under section 10(a)(1)(A) of the Endangered Species Act, as amended (ESA; 16 U.S.C. 1531 *et seq.*). The requested permits would allow the applicants to conduct activities intended to promote recovery of species that are listed as endangered or threatened under the ESA.

Background

With some exceptions, the ESA prohibits activities that constitute take of listed species unless a Federal permit is issued that allows such activity. The ESA's definition of ''take'' includes such activities as pursuing, harassing, trapping, capturing, or collecting, in addition to hunting, shooting, harming, wounding, or killing.

A recovery permit issued by us under section 10(a)(1)(A) of the ESA authorizes the permittee to conduct activities with endangered or threatened species for scientific purposes that promote recovery or for enhancement of propagation or survival of the species. These activities often include such prohibited actions as capture and collection. Our regulations implementing section 10(a)(1)(A) for these permits are found in the Code of Federal Regulations at 50 CFR 17.22 for endangered wildlife species, 50 CFR 17.32 for threatened wildlife species, 50 CFR 17.62 for endangered plant species, and 50 CFR 17.72 for threatened plant species.

Permit Applications Available for Review and Comment

Proposed activities in the following permit requests are for the recovery and enhancement of propagation or survival of the species in the wild. The ESA requires that we invite public comment before issuing these permits. Accordingly, we invite local, State, Tribal, and Federal agencies and the public to submit written data, views, or arguments with respect to these applications. The comments and recommendations that will be most useful and likely to influence agency decisions are those supported by quantitative information or studies.

Application No.	Applicant, city, state	Species	Location	Take activity	Permit action
42833A	Ian Maunsell, El Cajon, California.	• Quino checkerspot butterfly (*Euphydryas editha quino*). • Light-footed Ridgway's rail (*Rallus obsoletus levipes*). • Yuma Ridgway's rail (*Rallus obsoletus yumanensis*). • Riverside fairy shrimp (*Streptocephalus woottoni*). • San Diego fairy shrimp (*Branchinecta sandiegonensis*).	CA	Survey using recorded vocalizations, pursue, capture, handle, release, collect adult vouchers, and collect branchiopod cysts.	Renew.
88417B	Phoenix Biological Consulting, Vista, California.	• Giant kangaroo rat (*Dipodomys ingens*) • Tipton kangaroo rat (*Dipodomys nitratoides nitratoides*). • Southwestern willow flycatcher (*Empidonax traillii extimus*). • Yellow-billed cuckoo (*Coccyzus americanus*) Western distinct population segment.	CA, NV	Survey, survey using recorded vocalizations, capture, handle, and release.	Renew.
59559C	McCormick Biological, Inc., Bakersfield, California.	• California tiger salamander (*Ambystoma californiense*), Sonoma County and Santa Barbara County distinct population segments. • Giant kangaroo rat (*Dipodomys ingens*) • Tipton kangaroo rat (*Dipodomys nitratoides nitratoides*). • Buena Vista Lake ornate shrew (*Sorex ornatus relictus*). • Conservancy fairy shrimp (*Branchinecta conservatio*). • Longhorn fairy shrimp (*Branchinecta longiantenna*). • Vernal pool tadpole shrimp (*Lepidurus packardi*). • Riverside fairy shrimp (*Streptocephalus woottoni*). • San Diego fairy shrimp (*Branchinecta sandiegonensis*).	CA	Survey, capture, handle, mark, tissue sample, relocate, and release, collect adult vouchers, and collect branchiopod cysts.	Renew and amend.
843381	Sonoma-Mendocino Coast District State Parks, Mendocino, California.	• Point Arena mountain beaver (*Aplodontia rufa nigra*). • Behren's silverspot butterfly (*Speyeria zerene behrensii*).	CA	Survey, pursue, and perform habitat restoration.	Renew.
PER1628411	Mira Falicki, Santa Barbara, California.	• California tiger salamander (*Ambystoma californiense*), Sonoma County and Santa Barbara County distinct population segments.	CA	Survey, capture, handle, and release.	New.
050122	California Department of Fish and Wildlife, Bishop, California.	• Sierra Nevada bighorn sheep (*Ovis canadensis sierrae*).	CA	Survey, pursue, trap, capture, collect, handle, mark, collar, collect morphological data and biological samples, conduct ultrasounds, insert vaginal implant transmitters, wound administer veterinary care, release, euthanize, transport, translocate, and hold in captivity.	Renew.

Application No.	Applicant, city, state	Species	Location	Take activity	Permit action
PER1628413	Mario Gaytan, Bakersfield, California.	• Morro Bay kangaroo rat (*Dipodomys heermanni morroensis*). • Fresno kangaroo rat (*Dipodomys nitratoides exilis*). • Giant kangaroo rat (*Dipodomys ingens*) • Tipton kangaroo rat (*Dipodomys nitratoides nitratoides*). • Conservancy fairy shrimp (*Branchinecta conservatio*). • Longhorn fairy shrimp (*Branchinecta longiantenna*). • Vernal pool tadpole shrimp (*Lepidurus packardi*). • Riverside fairy shrimp (*Streptocephalus woottoni*). • San Diego fairy shrimp (*Branchinecta sandiegonensis*).	CA	Survey, capture, handle, release, and collect adult vouchers.	New.
59924C	Land Trust of Santa Cruz County, Santa Cruz, California.	• Ohlone tiger beetle (*Cicindela ohlone*)	CA	Survey, monitor populations, and conduct habitat restoration.	Renew.
039460	Thomas Olson, Lompoc, California.	• California tiger salamander (*Ambystoma californiense*), Santa Barbara County distinct population segments.	CA	Survey, capture, handle, release, collect genetic samples, and collect voucher specimens.	Renew.
34570A	San Francisco Bay Bird Observatory, Milpitas, California.	• California least tern (*Sternula antillarum browni*).	CA	Survey, locate and monitor nests, monitor with cameras, trap, collect genetic samples, mark, float eggs, erect chick shelters, play audio, and place, maintain, and remove decoys.	Renew and amend.
96514A	Jonathan Aguayo, Buena Park, California.	• El Segundo blue butterfly (*Euphilotes battoides allyni*).	CA	Pursue	Amend.
782703	Michael Couffer, Corona Del Mar, California.	• Quino checkerspot butterfly (*Euphydryas editha quino*).	CA	Pursue	Renew.
PER2371117	Lora Roame, Walnut Creek, California.	• Conservancy fairy shrimp (*Branchinecta conservatio*). • Longhorn fairy shrimp (*Branchinecta longiantenna*). • Vernal pool tadpole shrimp (*Lepidurus packardi*). • Riverside fairy shrimp (*Streptocephalus woottoni*). • San Diego fairy shrimp (*Branchinecta sandiegonensis*).	CA	Survey, capture, handle, release, collect adult vouchers, and collect branchiopod cysts.	New.
PER2372962	Danielle Temple, Crowley Lake, California.	• Conservancy fairy shrimp (*Branchinecta conservatio*). • Longhorn fairy shrimp (*Branchinecta longiantenna*). • Vernal pool tadpole shrimp (*Lepidurus packardi*). • Riverside fairy shrimp (*Streptocephalus woottoni*). • San Diego fairy shrimp (*Branchinecta sandiegonensis*).	CA	Survey, capture, handle, release, and collect adult vouchers..	New.
022227	Harry Smead, Escondido, California.	• Conservancy fairy shrimp (*Branchinecta conservatio*). • Longhorn fairy shrimp (*Branchinecta longiantenna*). • Vernal pool tadpole shrimp (*Lepidurus packardi*). • Riverside fairy shrimp (*Streptocephalus woottoni*). • San Diego fairy shrimp (*Branchinecta sandiegonensis*).	CA	Survey, capture, handle, release, collect adult vouchers, and collect branchiopod cysts.	Renew.
PER2421919	Patrick Kong, Fresno, California.	• Conservancy fairy shrimp (*Branchinecta conservatio*). • Longhorn fairy shrimp (*Branchinecta longiantenna*). • Vernal pool tadpole shrimp (*Lepidurus packardi*). • Riverside fairy shrimp (*Streptocephalus woottoni*). • San Diego fairy shrimp (*Branchinecta sandiegonensis*).	CA	Survey, capture, handle, release, and collect adult vouchers.	New.
117947	Kevin Clark, San Diego, California.	• California least tern (*Sternula antillarum browni*).	CA	Survey, locate and monitor nests, handle, band, and release.	Amend.

Application No.	Applicant, city, state	Species	Location	Take activity	Permit action
PER2422473	Wildlife Innovations, Inc., Lakeside, California.	• California least tern (*Sternula antillarum browni*). • California Ridgway's rail (Rallus obsoletus obsoletus). • Light-footed Ridgway's rail (Rallus obsoletus levipes).	CA	Survey, locate and monitor nests, monitor with cameras, trap, collect genetic samples, mark, float eggs, erect chick shelters, play audio, capture, handle, measure, and relocate, band, place and maintain nest exclosures, and place, maintain, and remove decoys.	New.
PER2423321	Ryan Anderson, Newport Beach, California.	• California tiger salamander (*Ambystoma californiense*), Sonoma County and Santa Barbara County distinct population segments.	CA	Survey, capture, handle, and release.	New.
PER0011963	Ian Hirschler, San Diego, California.	• Delhi Sands flower-loving fly (*Rhaphiomidas terminatus abdominalis*).	CA	Pursue	Amend.
PER2424938	Westland Resources, Inc., Tucson, Arizona.	• Tiehm's buckwheat (*Eriogonum tiehmii*)	NV	Collect seeds, bulk seeds	New.
205600	Bonnie Peterson, Sacramento, California.	• Conservancy fairy shrimp (*Branchinecta conservatio*). • Longhorn fairy shrimp (*Branchinecta longiantenna*). • Vernal pool tadpole shrimp (*Lepidurus packardi*). • Riverside fairy shrimp (*Streptocephalus woottoni*). • San Diego fairy shrimp (*Branchinecta sandiegonensis*).	CA	Survey, capture, handle, release, collect adult vouchers, and collect branchiopod cysts.	Renew.
090849	David Wolff, Los Osos, California.	• Conservancy fairy shrimp (*Branchinecta conservatio*). • Longhorn fairy shrimp (*Branchinecta longiantenna*). • Vernal pool tadpole shrimp (*Lepidurus packardi*). • Riverside fairy shrimp (*Streptocephalus woottoni*). • San Diego fairy shrimp (*Branchinecta sandiegonensis*).	CA	Survey, capture, handle, release, collect adult vouchers, and collect branchiopod cysts.	Renew.
233373	MaryAnne Flett, Pt. Reyes Station, California.	• California Ridgway's rail (*Rallus obsoletus obsoletus*).	CA	Survey using recorded vocalizations.	Renew.
76005A	Tara Schoenwetter, Ventura, California.	• Gaviota tarplant (*Deinandra increscens ssp. villosa*). • La Graciosa thistle (*Cirsium loncholepis*) • Gambel's watercress (*Rorippa gambellii*) • Lompoc yerba santa (*Eriodictyon capitatum*). • • Marsh Sandwort (*Arenaria paludicola*). • Conservancy fairy shrimp (*Branchinecta conservatio*). • Longhorn fairy shrimp (*Branchinecta longiantenna*). • Vernal pool tadpole shrimp (*Lepidurus packardi*). • Riverside fairy shrimp (*Streptocephalus woottoni*). • San Diego fairy shrimp (*Branchinecta sandiegonensis*)	CA	Remove and reduce to possession, survey, capture, handle, release, collect adult vouchers, and collect branchiopod cysts.	Renew.
60358C	California Department of Fish and Wildlife, San Diego, California.	• Riverside fairy shrimp (*Streptocephalus woottoni*). • San Diego fairy shrimp (*Branchinecta sandiegonensis*).	CA	Survey, capture, handle, release, and collect adult vouchers.	Renew.
835365	California Department of Water Resources, West Sacramento, California.	• Conservancy fairy shrimp (*Branchinecta conservatio*). • Longhorn fairy shrimp (*Branchinecta longiantenna*). • Vernal pool tadpole shrimp (*Lepidurus packardi*). • Riverside fairy shrimp (*Streptocephalus woottoni*). • San Diego fairy shrimp (*Branchinecta sandiegonensis*). • California Ridgway's rail (*Rallus obsoletus obsoletus*). • California tiger salamander (*Ambystoma californiense*), Sonoma County and Santa Barbara County distinct population segments. • Salt marsh harvest mouse (*Reithrodontomys raviventris*).	CA	Survey, survey using recorded vocalizations, handle, mark, release, use egg grids, collect adult vouchers, and collect branchiopod cysts.	Renew.

Application No.	Applicant, city, state	Species	Location	Take activity	Permit action
54614A	California Department of Fish and Wildlife, Rancho Cordova, California.	• Amargosa vole (*Microtus californicus scirpensis*).	CA	Survey, capture, handle, collect, photograph, tag, mark, collect genetic samples, administer veterinary care, euthanize, remove from the wild, emergency salvage, transport, hold in captivity, captive rear, captive breed, conduct behavioral studies, release to the wild, translocate, use remote cameras, and monitor populations.	Renew and amend.
59680C	Thea Wang, Glendale, California.	• San Bernardino Merriam's kangaroo rat (*Dipodomys merriami parvus*). • Pacific pocket mouse (*Perognathus longimembris pacificus*).	CA	Survey, capture, handle, and release.	Renew.
72713C	Bradford Hollingsworth, San Diego, California.	• Arroyo (= arroyo southwestern) toad (*Anaxyrus californicus*).	CA	Survey, capture, handle, and release.	Renew.
32290D	Michael Scaffidi, Davis, California.	• Conservancy fairy shrimp (*Branchinecta conservatio*). • Longhorn fairy shrimp (*Branchinecta longiantenna*). • Vernal pool tadpole shrimp (*Lepidurus packardi*). • Riverside fairy shrimp (*Streptocephalus woottoni*). • San Diego fairy shrimp (*Branchinecta sandiegonensis*).	CA	Survey, capture, handle, release, and collect adult vouchers.	Renew.
019949	Vipul Joshi, Encinitas, California.	• Quino checkerspot butterfly (*Euphydryas editha quino*).	CA	Pursue	Renew.
089980	Hagar Environmental Science, Loch Lomond, California.	• Tidewater goby (*Eucyclogobius newberryi*).	CA	Survey, capture, handle, and release.	Renew.
797234	LSA Associates, Inc., Point Richmond, California.	• Conservancy fairy shrimp (*Branchinecta conservatio*). • Longhorn fairy shrimp (*Branchinecta longiantenna*). Vernal pool tadpole shrimp (*Lepidurus packardi*). • Riverside fairy shrimp (*Streptocephalus woottoni*). • San Diego fairy shrimp (*Branchinecta sandiegonensis*). • California Ridgway's rail (*Rallus obsoletus obsoletus*). • California tiger salamander (*Ambystoma californiense*), Sonoma County and Santa Barbara County distinct population segments. • California freshwater shrimp (*Syncaris pacifica*). • San Francisco garter snake (*Thamnophis sirtalis tetrataenia*).	CA	Survey, survey using recorded vocalizations, capture, handle, mark, release, collect adult vouchers, collect branchiopod cysts, collect, process, and analyze vernal pool soil samples for the presence of resting eggs.	Renew.
45250C	Griffin Brungraber, Bend, Oregon.	• Quino checkerspot butterfly (*Euphydryas editha quino*).	CA	Pursue	Renew.
24603A	Karen Carter, Running Springs, California.	• Yuma Ridgway's rail (*Rallus obsoletus yumanensis*).	CA, NV	Survey using recorded vocalizations.	Renew.
787924	Markus Spiegelberg, San Diego, California.	• Quino checkerspot butterfly (*Euphydryas editha quino*).	CA	Pursue	Amend.
062907	Andrew Forde, Camarillo, California.	• Southwestern willow flycatcher (*Empidonax traillii extimus*). • Arroyo (= arroyo southwestern) toad (*Anaxyrus californicus*).	CA, NV	Survey using recorded vocalizations, survey, capture, handle, and release.	Renew and amend.
082233	Marcus England, Los Angeles, California.	• Southwestern willow flycatcher (*Empidonax traillii extimus*).	CA	Survey using recorded vocalizations.	Renew.
839960	John Dicus, Black Canyon City, Arizona.	• Delhi Sands flower-loving fly (*Rhaphiomidas terminatus abdominalis*). • Quino checkerspot butterfly (*Euphydryas editha quino*).	CA	Pursue	Renew.
797267	Triple HS, Inc., Los Gatos, California.	• Conservancy fairy shrimp (*Branchinecta conservatio*). • Longhorn fairy shrimp (*Branchinecta longiantenna*). • Vernal pool tadpole shrimp (*Lepidurus packardi*). • Riverside fairy shrimp (*Streptocephalus woottoni*). • San Diego fairy shrimp (*Branchinecta sandiegonensis*).	CA	Survey, survey using recorded vocalizations, capture, handle, mark, release, collect adult vouchers, and collect branchiopod cysts.	Renew.

Application No.	Applicant, city, state	Species	Location	Take activity	Permit action
		• California Ridgway's rail (*Rallus obsoletus obsoletus*). • California tiger salamander (*Ambystoma californiense*), Sonoma County and Santa Barbara County distinct population segments. • Fresno kangaroo rat (*Dipodomys nitratoides exilis*). • Giant kangaroo rat (*Dipodomys ingens*). • Tipton kangaroo rat (*Dipodomys nitratoides nitratoides*). • Salt marsh harvest mouse (*Reithrodontomys raviventris*).			
84156D	Stephen Gergeni, Sacramento, California.	• California tiger salamander (*Ambystoma californiense*), Sonoma County and Santa Barbara County distinct population segments. • Conservancy fairy shrimp (*Branchinecta conservatio*). • Longhorn fairy shrimp (*Branchinecta longiantenna*). • Vernal pool tadpole shrimp (*Lepidurus packardi*). • Riverside fairy shrimp (*Streptocephalus woottoni*). • San Diego fairy shrimp (*Branchinecta sandiegonensis*).	CA	Survey, capture, handle, mark, release, collect adult vouchers, and collect branchiopod cysts.	Renew and amend.
48210A	Area West Environmental, Inc., Orangevale, California.	• California tiger salamander (*Ambystoma californiense*), Sonoma County and Santa Barbara County distinct population segments. • Conservancy fairy shrimp (*Branchinecta conservatio*). • Longhorn fairy shrimp (*Branchinecta longiantenna*). • Vernal pool tadpole shrimp (*Lepidurus packardi*). • Riverside fairy shrimp (*Streptocephalus woottoni*). • San Diego fairy shrimp (*Branchinecta sandiegonensis*).	CA	Survey, capture, handle, collect genetic material, release, collect adult vouchers, and collect branchiopod cysts.	Renew.
34132C	USDA Forest Service, Vallejo, California.	• Sierra Nevada yellow-legged frog (*Rana sierrae*). • Mountain yellow-legged frog (*Rana muscosa*), Northern California distinct population segment.	CA, NV	Survey, capture, handle, measure, mark, transport, translocate, emergency salvage, and release.	Renew.
777965	LSA Associates, Inc., Ventura, California.	• Conservancy fairy shrimp (*Branchinecta conservatio*). • Longhorn fairy shrimp (*Branchinecta longiantenna*). • Vernal pool tadpole shrimp (*Lepidurus packardi*). • Riverside fairy shrimp (*Streptocephalus woottoni*). • San Diego fairy shrimp (*Branchinecta sandiegonensis*). • Fresno kangaroo rat (*Dipodomys nitratoides exilis*). • Giant kangaroo rat (*Dipodomys ingens*). • Tipton kangaroo rat (*Dipodomys nitratoides nitratoides*). • San Bernardino Merriam's kangaroo rat (*Dipodomys merriami parvus*). • Pacific pocket mouse (*Perognathus longimembris pacificus*). • Southwestern willow flycatcher (*Empidonax traillii extimus*). • Delhi Sands flower-loving fly (*Rhaphiomidas terminatus abdominalis*). • Quino checkerspot butterfly (*Euphydryas editha quino*).	CA	Survey, survey using recorded vocalizations, pursue, capture, handle, mark, release, collect adult vouchers, and collect branchiopod cysts.	Renew.
006559	Dale Powell, Riverside, California.	• Delhi Sands flower-loving fly (*Rhaphiomidas terminatus abdominalis*). • Quino checkerspot butterfly (*Euphydryas editha quino*). • Conservancy fairy shrimp (*Branchinecta conservatio*). • Longhorn fairy shrimp (*Branchinecta longiantenna*). • Vernal pool tadpole shrimp (*Lepidurus packardi*). • Riverside fairy shrimp (*Streptocephalus woottoni*).	CA	Survey, pursue, light-trap, capture, handle, mark, release, collect adult vouchers, and collect branchiopod cysts.	Renew.

Application No.	Applicant, city, state	Species	Location	Take activity	Permit action
PER2380360	Sarah Yates, Clovis, California.	• San Diego fairy shrimp (*Branchinecta sandiegonensis*). • Conservancy fairy shrimp (*Branchinecta conservatio*). • Longhorn fairy shrimp (*Branchinecta longiantenna*). • Vernal pool tadpole shrimp (*Lepidurus packardi*). • Riverside fairy shrimp (*Streptocephalus woottoni*). • San Diego fairy shrimp (*Branchinecta sandiegonensis*).	CA	Survey, capture, handle, mark, release, and collect adult vouchers.	New.
PER2380694	Christopher Waterston, Santa Ana, California.	• Conservancy fairy shrimp (*Branchinecta conservatio*). • Longhorn fairy shrimp (*Branchinecta longiantenna*). • Vernal pool tadpole shrimp (*Lepidurus packardi*). • Riverside fairy shrimp (*Streptocephalus woottoni*). • San Diego fairy shrimp (*Branchinecta sandiegonensis*).	CA	Survey, capture, handle, release, collect adult vouchers, and collect branchiopod cysts.	New.
PER2381586	National Park Service, El Portal, California.	• Fisher (*Pekania pennanti*), Southern Sierra Nevada distinct population segment.	CA	Survey, capture, handle, mark, and release.	New.
PER2383715	Calypso Botanical Consulting, Ashland, Oregon.	• Conservancy fairy shrimp (*Branchinecta conservatio*). • Longhorn fairy shrimp (*Branchinecta longiantenna*). • Vernal pool tadpole shrimp (*Lepidurus packardi*). • Riverside fairy shrimp (*Streptocephalus woottoni*). • San Diego fairy shrimp (*Branchinecta sandiegonensis*).	CA, OR	Survey, capture, handle, release, and collect adult vouchers.	New.
92770B	Conservation Society of California, Oakland, California.	• Sierra Nevada yellow-legged frog (*Rana sierrae*). • Mountain yellow-legged frog (*Rana muscosa*), Northern California distinct population segment.	CA	Transport, captive-rear, provide veterinary treatment and husbandry, take genetic samples, mark, perform behavioral and disease experiments, indefinitely retain and display to the public those individuals that are unfit for reintroduction into the wild, release, euthanize, and necropsy.	Renew.
PER2385052	Derek Siver, Seattle, Washington.	• Conservancy fairy shrimp (*Branchinecta conservatio*). • Longhorn fairy shrimp (*Branchinecta longiantenna*). • Vernal pool tadpole shrimp (*Lepidurus packardi*). • Riverside fairy shrimp (*Streptocephalus woottoni*). • San Diego fairy shrimp (*Branchinecta sandiegonensis*).	CA, OR	Survey, capture, handle, release, collect adult vouchers, and collect branchiopod cysts.	New.
PER2385673	Jamie Del Pozzo, Pacific Grove, California.	• California tiger salamander (*Ambystoma californiense*), Sonoma County and Santa Barbara County distinct population segments.	CA	Survey, capture, handle, and release.	New.
PER2385850	Lorna Haworth, Sacramento, California.	• Conservancy fairy shrimp (*Branchinecta conservatio*). • Longhorn fairy shrimp (*Branchinecta longiantenna*). • Vernal pool tadpole shrimp (*Lepidurus packardi*). • Riverside fairy shrimp (*Streptocephalus woottoni*). • San Diego fairy shrimp (*Branchinecta sandiegonensis*).	CA	Survey, capture, handle, release, and collect adult vouchers.	New.
19843C	Jennifer Sexton, Simi Valley, California.	• Southwestern willow flycatcher (*Empidonax traillii extimus*).	CA	Survey using recorded vocalizations.	Renew.
13115C	Lisa Henderson, San Ramon, California.	• Conservancy fairy shrimp (*Branchinecta conservatio*). • Longhorn fairy shrimp (*Branchinecta longiantenna*). • Vernal pool tadpole shrimp (*Lepidurus packardi*). • Riverside fairy shrimp (*Streptocephalus woottoni*). • San Diego fairy shrimp (*Branchinecta sandiegonensis*).	CA	Survey, capture, handle, release, and collect adult vouchers.	Amend.

Public Availability of Comments

Written comments we receive become part of the administrative record associated with this action. Before including your address, phone number, email address, or other personal identifying information in your comment, you should be aware that your entire comment—including your personal identifying information—may be made publicly available at any time. While you can request in your comment that we withhold your personal identifying information from public review, we cannot guarantee that we will be able to do so. All submissions from organizations or businesses, and from individuals identifying themselves as representatives or officials of be made available for public disclosure in their entirety.

Next Steps

If we decide to issue permits to any of the applicants listed in this notice, we will publish a notice in the **Federal Register**.

Authority

We publish this notice under section 10(c) of the Endangered Species Act of 1973, as amended (16 U.S.C. 1531 *et seq.*).

Peter Erickson,

Acting Regional Ecological Services Program Manager, Pacific Southwest Region, Sacramento, California.

[FR Doc. 2023–08940 Filed 4–26–23; 8:45 am]

BILLING CODE 4333–15–P

DEPARTMENT OF THE INTERIOR

Fish and Wildlife Service

[Docket No. FWS–R4–ES–2023–0059; FXES11140400000–234–FF04EF4000]

Receipt of Incidental Take Permit Application and Proposed Habitat Conservation Plan for the Sand Skink; Lake County, FL; Categorical Exclusion

AGENCY: Fish and Wildlife Service, Interior.

ACTION: Notice of availability; request for comments.

SUMMARY: We, the Fish and Wildlife Service (Service), announce receipt of an application from Lake County (Hooks Street Extension) (applicant) for an incidental take permit (ITP) under the Endangered Species Act. The applicant requests the ITP to take the federally listed sand skink (*Neoseps reynoldsi*) incidental to the construction of a roadway in Lake County, Florida. We request public comment on the application, which includes the applicant's proposed habitat conservation plan (HCP), and on the Service's preliminary determination that the proposed permitting action may be eligible for a categorical exclusion pursuant to the Council on Environmental Quality's National Environmental Policy Act (NEPA) regulations, the Department of the Interior's (DOI) NEPA regulations, and the DOI Departmental Manual. To make this preliminary determination, we prepared a draft environmental action statement and low-effect screening form, both of which are also available for public review. We invite comment from the public and local, State, Tribal, and Federal agencies.

DATES: We must receive your written comments on or before May 30, 2023.

ADDRESSES:

Obtaining Documents: You may obtain copies of the documents online in Docket No. FWS–R4–ES–2023–0059; at *https://www.regulations.gov.*

Submitting Comments: If you wish to submit comments on any of the documents, you may do so in writing by one of the following methods:

- *Online: https://www.regulations.gov.* Follow the instructions for submitting comments on Docket No. FWS–R4–ES–2023–0059;
- *U.S. mail:* Public Comments Processing, Attn: Docket No. FWS–R4–ES–2023–0059; U.S. Fish and Wildlife Service, MS: PRB/3W, 5275 Leesburg Pike, Falls Church, VA 22041–3803.

FOR FURTHER INFORMATION CONTACT: Erin Gawera, by U.S. mail (see **ADDRESSES**), by telephone at 904–731–3121 or via email at *erin_gawera@fws.gov.* Individuals in the United States who are deaf, deafblind, hard of hearing, or have a speech disability may dial 711 (TTY, TDD, or TeleBraille) to access telecommunications relay services. Individuals outside the United States should use the relay services offered within their country to make international calls to the point-of-contact in the United States.

SUPPLEMENTARY INFORMATION: We, the Fish and Wildlife Service (Service), announce receipt of an application from Lake County (applicant) for an incidental take permit (ITP) under the Endangered Species Act of 1973, as amended (ESA; 16 U.S.C. 1531 *et seq.*). The applicant requests the ITP to take the federally listed sand skink (*Neoseps reynoldsi*) (skink) incidental to the construction and operation of a roadway (Hooks Street Extension) in Lake County, Florida. We request public comment on the application, which includes the applicant's habitat conservation plan (HCP), and on the Service's preliminary determination that this proposed ITP qualifies as ''low effect,'' and may qualify for a categorical exclusion pursuant to the Council on Environmental Quality's National Environmental Policy Act (NEPA) regulations (40 CFR 1501.4), the Department of the Interior's (DOI) NEPA regulations (43 CFR 46), and the DOI's Departmental Manual (516 DM 8.5(C)(2)). To make this preliminary determination, we prepared a draft environmental action statement and low-effect screening form, both of which are also available for public review.

Proposed Project

The applicant requests a 10-year ITP to take skinks via the conversion of approximately 1.63 acres (ac) of occupied nesting, foraging, and sheltering skink habitat incidental to the construction and operation of a roadway on a 17.0-ac in Sections 9 and 27, Township 22 South, Range 26 East, Lake County, Florida. The applicant proposes to mitigate for take of the skinks by purchasing credits equivalent to 3.26 ac of skink-occupied habitat from the Lake Livingston Conservation Bank or another Service-approved conservation bank. The Service would require the applicant to purchase the credits prior to engaging in any construction phase of the project.

Public Availability of Comments

Before including your address, phone number, email address, or other personal identifying information in your comment, be aware that your entire comment, including your personal identifying information, may be made available to the public. While you may request that we withhold your personal identifying information, we cannot guarantee that we will be able to do so.

Our Preliminary Determination

The Service has made a preliminary determination that the applicant's proposed project—including the construction of the roadway and associated infrastructure—would individually and cumulatively have a minor or negligible effect on the skinks and the environment. Therefore, we have preliminarily determined that the proposed ESA section 10(a)(1)(B) permit would be a ''low-effect'' ITP that individually or cumulatively would have a minor effect on the sand skink and may qualify for application of a categorical exclusion pursuant to the Council on Environmental Quality's NEPA regulations, DOI's NEPA regulations, and the DOI Departmental

Manual. A ''low-effect'' incidental take permit is one that would result in (1) minor or negligible effects on species covered in the HCP; (2) nonsignificant effects on the human environment; and (3) impacts that, when added together with the impacts of other past, present, and reasonable foreseeable actions, would not result in significant cumulative effects to the human environment.

Next Steps

The Service will evaluate the application and the comments to determine whether to issue the requested ITP. We will also conduct an intra-Service consultation pursuant to section 7 of the ESA to evaluate the effects of the proposed take. After considering the preceding and other matters, we will determine whether the permit issuance criteria of section 10(a)(1)(B) of the ESA have been met. If met, the Service will issue ITP number PER 0124344 to Lake County.

Authority

The Service provides this notice under section 10(c) of the Endangered Species Act (16 U.S.C. 1531 *et seq.*) and its implementing regulations (50 CFR 17.32) and the National Environmental Policy Act (42 U.S.C. 4321 *et seq.*) and its implementing regulations (40 CFR 1500–1508 and 43 CFR 46).

Robert L. Carey,

Division Manager, Environmental Review, Florida Ecological Services Office.

[FR Doc. 2023–08928 Filed 4–26–23; 8:45 am]

BILLING CODE 4333–15–P

DEPARTMENT OF THE INTERIOR

Fish and Wildlife Service

[FWS–R3–ES–2023–N039; FXES11130300000–234–FF03E00000]

Endangered and Threatened Species; Receipt of Recovery Permit Applications

AGENCY: Fish and Wildlife Service, Interior.

ACTION: Notice of receipt of permit applications; request for comments.

SUMMARY: We, the U.S. Fish and Wildlife Service, have received applications for permits to conduct activities intended to enhance the propagation or survival of endangered or threatened species under the ESA. We invite the public and local, State, Tribal, and Federal agencies to comment on these applications. Before issuing any of the requested permits, we will take into consideration any information that we receive during the public comment period.

DATES: We must receive your written comments on or before May 30, 2023.

ADDRESSES: *Document availability and comment submission:* Submit requests for copies of the applications and related documents, as well as any comments, by one of the following methods. All requests and comments should specify the applicant name(s) and application number(s) (*e.g.,* ESXXXXXX; see table in (**SUPPLEMENTARY INFORMATION**):

- *Email (preferred method): permitsR3ES@fws.gov.* Please refer to the respective application number (*e.g.,* Application No. ESXXXXXX) in the subject line of your email message.
- *U.S. Mail:* Regional Director, Attn: Nathan Rathbun, U.S. Fish and Wildlife Service, Ecological Services, 5600 American Blvd. West, Suite 990, Bloomington, MN 55437–1458.

FOR FURTHER INFORMATION CONTACT: Nathan Rathbun, 612–713–5343 (phone); *permitsR3ES@fws.gov* (email). Individuals in the United States who are deaf, deafblind, hard of hearing, or have a speech disability may dial 711 (TTY, TDD, or TeleBraille) to access telecommunications relay services. Individuals outside the United States should use the relay services offered within their country to make international calls to the point-of-contact in the United States.

SUPPLEMENTARY INFORMATION: We, the U.S. Fish and Wildlife Service, invite review and comment from the public and local, State, Tribal, and Federal agencies on applications we have received for permits to conduct certain activities with endangered and threatened species under section 10(a)(1)(A) of the Endangered Species Act of 1973, as amended (ESA; 16 U.S.C. 1531 *et seq.*), and our regulations in the Code of Federal Regulations (CFR) at 50 CFR part 17. Documents and other information submitted with the applications are available for review, subject to the requirements of the Privacy Act and the Freedom of Information Act.

Background

The Endangered Species Act of 1973, as amended (ESA; 16 U.S.C. 1531 *et seq.*), prohibits certain activities with endangered and threatened species unless authorized by a Federal permit. The ESA and our implementing regulations in part 17 of title 50 of the Code of Federal Regulations (CFR) provide for the issuance of such permits and require that we invite public comment before issuing permits for activities involving endangered species.

A recovery permit issued by us under section 10(a)(1)(A) of the ESA authorizes the permittee to conduct activities with endangered species for scientific purposes that promote recovery or for enhancement of propagation or survival of the species. Our regulations implementing section 10(a)(1)(A) for these permits are found at 50 CFR 17.22 for endangered wildlife species, 50 CFR 17.32 for threatened wildlife species, 50 CFR 17.62 for endangered plant species, and 50 CFR 17.72 for threatened plant species.

Permit Applications Available for Review and Comment

The ESA requires that we invite public comment before issuing these permits. Accordingly, we invite local, State, Tribal, and Federal agencies and the public to submit written data, views, or arguments with respect to these applications. The comments and recommendations that will be most useful and likely to influence agency decisions are those supported by quantitative information or studies. Proposed activities in the following permit requests are for the recovery and enhancement of propagation or survival of the species in the wild.

Application No.	Applicant	Species	Location	Activity	Type of take	Permit action
PER1896698	Caleb Knerr, Jefferson City, MO.	Eleven species of freshwater mussels.	AR, IA, IL, KS, KY, MO, NE, OK, TN.	Conduct presence/absence surveys, document habitat use, conduct population monitoring, and evaluate impacts.	Capture, handle, release, and relocate due to stranding.	New.

Application No.	Applicant	Species	Location	Activity	Type of take	Permit action
PER2362555	Daniel Symonds, Orient, OH.	Twenty-two species of freshwater mussels.	AL, AR, GA, IL, IN, IA, KS, KY, LA, MI, MO, MN, MS, NE, NY, NC, OK, OH, PA, TN, VA, VT, WV, WI.	Conduct presence/absence surveys, document habitat use, conduct population monitoring, and evaluate impacts.	Capture, handle, release, collect tissue samples, and relocate due to stranding.	New.
PER0009122	Emily Grossman, O'Fallon, MO.	Add new species:—round hickorynut (*Obovaria subrotunda*) and longsolid (*Fusconaia subrotunda*)—to existing authorized 22 species of freshwater mussels.	AR, IL, IN, IA, KS, KY, LA, MI, MN, MO, MS, NE, NY, NC, OK, OH, PA, SD, WV, WI.	Conduct presence/absence surveys, document habitat use, conduct population monitoring, and evaluate impacts.	Capture, handle, release, and relocate due to stranding.	Amend.
ES194099	Michael Hoggarth, Galena, OH.	Add new species:—round hickorynut (*Obovaria subrotunda*) and longsolid (*Fusconaia subrotunda*)—to existing 30 authorized of freshwater mussels.	IN, KY, MI, NY, OH, PA, WV.	Conduct presence/absence surveys, document habitat use, conduct population monitoring, and evaluate impacts.	Capture, handle, release, and relocate.	Amend.
PER2372507	Matthew Gilkay, Kent, OH.	Twelve species of freshwater mussels.	IA, MI, MN, NY, OH, PA, WV, WI.	Conduct presence/absence surveys, document habitat use, conduct population monitoring, and evaluate impacts.	Capture, handle, release, and relocate due to stranding.	New.
ES38821A	Stantec Consulting Services, Louisville, KY.	Add new species:—round hickorynut (*Obovaria subrotunda*), longsolid (*Fusconaia subrotunda*), and Cumberland darter (*Etheostoma susanae*)—to existing authorized species: 41 freshwater mussel species, 6 freshwater fish species, 5 bat species, copperbelly water snake (*Nerodia erythrogaster neglecta*), and Big Sandy River crayfish (*Cambarus callianus*).	AL, AR, CO, CT, DE, GA, IL, IN, IA, KS, KY, LA, ME, MD, MA, MI, MN, MO, MS, MT, NE, NH, NJ, NY, NC, ND, OK, OH, PA, RI, SC, SD, TN, TX, VT, VA, WV, WI, WY.	Conduct presence/absence surveys, document habitat use, conduct population monitoring, and evaluate impacts.	Capture, handle, tag, radio track, release, relocate due to stranding.	Amend.

Public Availability of Comments

Written comments we receive become part of the administrative record associated with this action. Before including your address, phone number, email address, or other personal identifying information in your comment, you should be aware that your entire comment—including your personal identifying information—may be made publicly available at any time. While you can request in your comment that we withhold your personal identifying information from public review, we cannot guarantee that we will be able to do so. Moreover, all submissions from organizations or businesses, and from individuals identifying themselves as representatives or officials of organizations or businesses, will be made available for public disclosure in their entirety.

Next Steps

If we decide to issue permits to any of the applicants listed in this notice, we will publish a notice in the **Federal Register**.

Authority

We publish this notice under section 10(c) of the Endangered Species Act of 1973, as amended (16 U.S.C. 1531 *et seq.*).

Lori Nordstrom,

Assistant Regional Director, Ecological Services, USFWS Region 3.

[FR Doc. 2023–08912 Filed 4–26–23; 8:45 am]

BILLING CODE 4333–15–P

DEPARTMENT OF THE INTERIOR

Bureau of Land Management

[LLNV933000.19200000–ET0000.LRORF2012100; TAS XXX; N–98605; MO# 4500168920]

Public Land Order No. 7921; Withdrawal of Public Land for Satellite Calibration in Railroad Valley; Nye County, Nevada

AGENCY: Bureau of Land Management, Interior.

ACTION: Public Land Order.

SUMMARY: This Public Land Order (PLO) withdraws 22,684.07 acres of public lands within the Railroad Valley (RRV) area, Nye County, Nevada, from settlement, sale, location, or entry under the public land laws, including location and entry under the United States mining laws, leasing under the mineral and geothermal leasing laws, and disposal of mineral materials under the Materials Act of 1947, subject to valid existing rights, for a period of 20 years, and reserves them for National Aeronautics and Space Administration (NASA) satellite calibration activities. Jurisdiction over the public lands remains with the Bureau of Land Management (BLM).

DATES: This PLO takes effect on April 27, 2023.

FOR FURTHER INFORMATION CONTACT: Edison Garcia, Land Law Examiner, BLM, by telephone at (775) 861–6530; by email: *edisongarcia@blm.gov,* during regular business hours, 8:00 a.m. to 4:00 p.m., Monday through Friday, except holidays. Individuals in the United States who are deaf, deafblind, hard of hearing, or have a speech disability may dial 711 (TTY, TDD, or TeleBraille) to access telecommunications relay services for contacting Mr. Garcia. Individuals outside the United States should use the relay services offered within their country to make international calls to the point-of-

contact in the United States. You will receive a reply during normal business hours.

SUPPLEMENTARY INFORMATION: The purpose of the withdrawal and reservation is to maintain the physical integrity of the surface and subsurface environment to ensure NASA satellite calibration activities are not invalidated or otherwise adversely affected.

Order

By virtue of the authority vested in the Secretary of the Interior by Section 204 of the Federal Land Policy and Management Act of 1976, 43 U.S.C. 1714, it is ordered as follows:

1. Subject to valid existing rights, the following described public lands are hereby withdrawn from settlement, sale, location, or entry under the public land laws, including location and entry under the United States mining laws, leasing under the mineral and geothermal leasing laws, and disposal of mineral materials under the Materials Act of 1947 (30. U.S.C. 601–604) and reserved for NASA's satellite calibration activities within Railroad Valley, Nye County, Nevada.

Mount Diablo Meridian, Nevada

T. 7 N., R. 56 E.,
Secs. 2 thru 17 and secs. 20 thru 27.
T. 8 N., R. 56 E.,
sec. 19, E½;
secs. 20 and 21 and secs. 27 thru 35.

The area described contains 22,684.07 acres of public lands in Nye County.

2. This withdrawal will expire 20 years from the effective date of this Order, unless, as a result of a review conducted before the expiration date pursuant to Section 204(f) of the Federal Land Policy and Management Act of 1976, 43 U.S.C. 1714(f), the Secretary determines that the withdrawal shall be extended.

(Authority: 43 U.S.C. 1714)

Tommy P. Beaudreau,

Deputy Secretary.

[FR Doc. 2023–08916 Filed 4–26–23; 8:45 am]

BILLING CODE 4331–21–P

DEPARTMENT OF THE INTERIOR

Bureau of Land Management

[LLOR93000 L61400000.HN0000LXLAH9990000 23X; OMB Control Number 1004–0168]

Agency Information Collection Activities; Submission to the Office of Management and Budget for Review and Approval; Tramroads and Logging Roads

AGENCY: Bureau of Land Management, Interior.

ACTION: Notice of information collection; request for comment.

SUMMARY: In accordance with the Paperwork Reduction Act of 1995 (PRA), the Bureau of Land Management (BLM) proposes to renew an information collection.

DATES: Interested persons are invited to submit comments on or before May 29, 2023.

ADDRESSES: Written comments and recommendations for this information collection request (ICR) should be sent within 30 days of publication of this notice to *www.reginfo.gov/public/do/PRAMain.* Find this particular information collection by selecting ''Currently under 30-day Review—Open for Public Comments'' or by using the search function.

FOR FURTHER INFORMATION CONTACT: To request additional information about this ICR, contact Jessica LeRoy by email at *jrleroy@blm.gov,* or by telephone at (971) 439–5054. Individuals in the United States who are deaf, deafblind, hard of hearing, or have a speech disability may dial 711 (TTY, TDD, or TeleBraille) to access telecommunications relay services. Individuals outside the United States should use the relay services offered within their country to make international calls to the point-of-contact in the United States. You may also view the ICR at *http://www.reginfo.gov/public/do/PRAMain.*

SUPPLEMENTARY INFORMATION: In accordance with the PRA (44 U.S.C. 3501 *et seq.*) and 5 CFR 1320.8(d)(1), we invite the public and other Federal agencies to comment on new, proposed, revised and continuing collections of information. This helps the BLM assess impacts of its information collection requirements and minimize the public's reporting burden. It also helps the public understand BLM information collection requirements and ensure requested data are provided in the desired format.

A **Federal Register** notice with a 60-day public comment period soliciting comments on this collection of information was published on December 20, 2022 (87 FR 77878). No comments were received in response to this notice.

As part of our continuing effort to reduce paperwork and respondent burdens, we are again inviting the public and other Federal agencies to comment on the proposed ICR described below. The BLM is especially interested in public comment addressing the following:

(1) Whether the collection of information is necessary for the proper performance of the functions of the agency, including whether the information will have practical utility.

(2) The accuracy of our estimate of the burden for this collection of information, including the validity of the methodology and assumptions used.

(3) Ways to enhance the quality, utility, and clarity of the information to be collected; and

(4) How might the agency minimize the burden of the collection of information on those who are to respond, including the use of appropriate automated, electronic, mechanical, or other technological collection techniques or other forms of information technology, *e.g.,* permitting electronic submission of response.

Comments submitted in response to this notice are a matter of public record. Before including your address, phone number, email address, or other personal identifying information in your comment, you should be aware that your entire comment—including your personal identifying information—may be made publicly available at any time. While you can ask us in your comment to withhold your personal identifying information from public review, we cannot guarantee that we will be able to do so.

Abstract: The BLM Oregon State Office has authority under the Oregon and California Revested Lands Sustained Yield Management Act of 1937 (43 U.S.C. 2601 and 2602) and subchapter V of the Federal Land Policy and Management Act (43 U.S.C. 1761–1771) to grant rights-of-way to private landowners to transport their timber over roads controlled by the BLM. This information collection enables the BLM to calculate and collect appropriate fees for this use of public lands. This OMB Control Number is currently scheduled to expire on August 31, 2023. The BLM request that OMB renew this OMB Control Number for an additional three years.

Title of Collection: Tramroads and Logging Roads (43 CFR part 2810).

OMB Control Number: 1004–0168.

Form Numbers: OR–2812–6.

Type of Review: Extension of a currently approved collection.

Respondents/Affected Public: Private landowners who hold rights-of-way for the use of BLM-controlled roads in western Oregon.

Total Estimated Number of Annual Respondents: 1,088.

Total Estimated Number of Annual Responses: 1,088.

Estimated Completion Time per Response: 8 hours.

Total Estimated Number of Annual Burden Hours: 8,704.

Respondent's Obligation: Required to obtain or retain a benefit.

Frequency of Collection: Annually, biannually, quarterly, or monthly, depending on the terms of the pertinent right-of-way.

Total Estimated Annual Nonhour Burden Cost: None.

An agency may not conduct or sponsor and, notwithstanding any other provision of law, a person is not required to respond to a collection of information unless it displays a currently valid OMB control number.

The authority for this action is the Paperwork Reduction Act of 1995 (44 U.S.C. 3501 *et seq.*).

Darrin King,

Information Collection Clearance Officer.

[FR Doc. 2023–08908 Filed 4–26–23; 8:45 am]

BILLING CODE 4310–84–P

DEPARTMENT OF THE INTERIOR

Bureau of Land Management

[BLM_Wyoming_FRN_MO4500168505]

Notice of Termination of Preparation of Environmental Impact Statement for the Hiawatha Regional Energy Development Project, Wyoming

AGENCY: Bureau of Land Management, Interior.

ACTION: Notice of termination.

SUMMARY: The preparation of an Environmental Impact Statement (EIS) for Hiawatha Regional Energy Development Project is no longer required, and the process is hereby terminated.

DATES: The EIS development process for Hiawatha Regional Energy Development Project is terminated immediately.

FOR FURTHER INFORMATION CONTACT: T.J. Franklin, Supervisory Natural Resource Specialist, Rock Springs Field Office, *tjfranklin@blm.gov,* 307–352–0318. Individuals in the United States who are deaf, deafblind, hard of hearing, or have a speech disability may dial 711 (TTY, TDD, or TeleBraille) to access telecommunications relay services for contacting Mr. Franklin. Individuals outside the United States should use the relay services offered within their country to make international calls to the point-of-contact in the United States.

SUPPLEMENTARY INFORMATION: On September 6, 2006, the BLM initiated analysis of the Hiawatha Regional Energy Development Project by publishing in the **Federal Register** a Notice of Intent to prepare an EIS and hold an associated scoping period (71 FR 52571). The EIS would have analyzed the No Action Alternative and three action alternatives, focused on achieving full field development in line with resource concerns.

The original Hiawatha Regional Energy Development Project proposal, submitted by Questar Exploration and Production Company and Wexpro Company, involved drilling about 4,208 wells and associated infrastructure such as well pads, production and storage equipment, and access roads on approximately 157,361 acres of existing oil and gas leases managed by BLM Wyoming and BLM Colorado, the States of Wyoming and Colorado, and private landowners in both states over a 20- to 30-year time period. The BLM administers approximately 143,159 surface acres of the original proposed project area. The State of Wyoming manages 6,338 acres, the State of Colorado manages 4,806 acres, and private landowners manage 3,058 surface acres.

In 2014, the original proponents revised their proposal downward to 2,200 vertically, directionally, and horizontally drilled wells on the same surface area over a 27- to 81-year period. Approximately two-thirds of the total proposed wells would have been in the Wyoming portion of the project area, and one-third would have been in the Colorado portion. In 2016, the proponents further reduced the proposal to 449 wells, with all oil and gas operations located on 47,407 acres in Wyoming.

The BLM was preparing the Draft EIS for the Hiawatha Regional Energy Development Project as revised in 2014, but halted work when the current proponents elected to temporarily stop funding the analysis in 2016. The proponents canceled the proposal by letter dated February 5, 2019. Any new proposal for development in the area will be subject to National Environmental Policy Act analysis, and the existing Hiawatha Programmatic Agreement for cultural resources would be amended accordingly. Because the proponents notified the BLM Rock Springs Field Office of their decision to cancel the proposal, the BLM is canceling the planning process and terminating its preparation of the Draft EIS.

(Authority: 40 CFR 1506.6, 40 CFR 1506.10)

Andrew Archuleta,

Wyoming State Director.

[FR Doc. 2023–08913 Filed 4–26–23; 8:45 am]

BILLING CODE 4331–26–P

DEPARTMENT OF THE INTERIOR

Bureau of Land Management

[234 LLUTY01000 L17110000.PN0000 LXSSJ0650000]

Notice of Public Meeting, Bears Ears National Monument Advisory Committee, Utah

AGENCY: Bureau of Land Management, Interior.

ACTION: Notice of public meeting.

SUMMARY: In accordance with the Federal Land Policy and Management Act, as amended, the Federal Advisory Committee Act, and the Federal Lands Recreation Enhancement Act, the U.S. Department of the Interior, Bureau of Land Management's (BLM's) Bears Ears National Monument Advisory Committee will meet as indicated below.

DATES: The Bears Ears National Monument Advisory Committee will hold an in-person field tour on June 22, 2023, and an in-person meeting with a virtual participation option on Nov. 8, 2023. The meeting and field tour are open to the public, but advance registration is required to attend the June 22 field tour.

ADDRESSES: The June field tour will include stops at multiple locations within Bears Ears National Monument. Members of the public who register in advance and Committee members will meet at the USDA Forest Service Monticello Ranger Station located at 397 North Main in Monticello, UT 84535, at 7:30 a.m. on June 22, 2023. The field tour will end at approximately 5 p.m. The Nov. 8, 2023, meeting will be held in-person at the Hideout located at 648 South Hideout Way, Monticello, UT 84535. The meeting will take place from 9 a.m. to approximately 4 p.m. Agendas and virtual meeting access information will be announced on the Bears Ears National Monument Advisory Committee web page 30 days before the meeting at *www.blm.gov/benm-mac.*

FOR FURTHER INFORMATION CONTACT: Rachel Wootton, Canyon Country

District Public Affairs Officer, P.O. Box 7, Monticello, Utah 84535, via email with the subject line ''BENM MAC'' to *blm_ut_mt_mail@blm.gov,* or by calling the Monticello Field Office at (435) 587–1500. Members of the public planning to attend the June 22, 2023, meeting must register in advance by emailing *BLM_UT_Monticello_Monuments@blm.gov* at least seven calendar days prior to the meeting stating their interest. Individuals in the United States who are deaf, deafblind, hard of hearing, or have a speech disability may dial 711 (TTY, TDD, or TeleBraille) to access telecommunications relay services. Individuals outside the United States should use the relay services offered within their country to make international calls to the point-of-contact in the United States.

SUPPLEMENTARY INFORMATION: Presidential Proclamation 9558 and Presidential Proclamation 10285 established the Bears Ears National Monument Advisory Committee to provide advice and information to the Secretary of the Interior through the Director of the BLM, and to the Secretary of the U.S. Department of Agriculture (USDA) through the Chief of the USDA Forest Service, to consider for managing the Bears Ears National Monument. The 15-member Committee represents a wide range of interests including State and local government, paleontological and archaeological expertise, the conservation community, livestock grazing permittees, Tribal members, developed and dispersed recreation interests, private landowners, local business owners, and the public at large.

Planned agenda items for the June field tour include visits to multiple locations within Bears Ears National Monument to discuss site conditions, history, monument resources, and management. Attendance will be limited to the first 20 members of the public who register. Participating members of the public must provide their own transportation, water, food, and any other necessary items to participate in outdoor activities safely and comfortably. Members of the public are also encouraged to carpool. Visit locations may change depending on weather and other conditions.

Planned agenda items for the November meeting include an overview of the planning efforts to-date, discussion of management alternatives included in the draft Bears Ears National Monument Resource Management Plan, and general management and administrative updates.

A public comment period will be offered during the November meeting at 1:15 p.m. Depending on the number of people wishing to comment and the time available, the time for individual comments may be limited. Written comments may also be sent to the Monticello Field Office at the address listed in the **FOR FURTHER INFORMATION CONTACT** section of this notice. All comments received prior to the meeting will be provided to the Committee.

Please make requests in advance for sign language interpreter services, assistive listening devices, or other reasonable accommodations. We ask that you contact the person listed under **FOR FURTHER INFORMATION CONTACT**, at least seven days prior to the meeting to give the Department of the Interior sufficient time to process your request. All reasonable accommodation requests are managed on a case-by-case basis.

Before including your address, phone number, email address, or other personal identifying information in your comment, you should be aware that your entire comment—including your personal identifying information—may be made publicly available at any time. While you can ask us in your comment to withhold your personal identifying information from public review, we cannot guarantee that we will be able to do so.

Detailed minutes for Bears Ears National Monument Advisory Committee meetings will be maintained in the Canyon Country District Office and will be available for public inspection and reproduction during regular business hours within 90 days following the meeting. Minutes will also be posted to the Committee's web page.

Authority: 5 U.S.C. ch. 10.

Gregory Sheehan,

State Director.

[FR Doc. 2023–08821 Filed 4–26–23; 8:45 am]

BILLING CODE 4331–25–P

DEPARTMENT OF THE INTERIOR

Bureau of Land Management

[LLHQ320000 L13300000.EP0000; OMB Control Number 1004–0103]

Agency Information Collection Activities; Mineral Materials Disposal

AGENCY: Bureau of Land Management, Interior.

ACTION: Notice of information collection; request for comment.

SUMMARY: In accordance with the Paperwork Reduction Act of 1995, the Bureau of Land Management (BLM) proposes to renew an information collection.

DATES: Interested persons are invited to submit comments on or before June 26, 2023.

ADDRESSES: Send your written comments on this information collection request (ICR) by mail to Darrin King, Information Collection Clearance Officer, U.S. Department of the Interior, Bureau of Land Management, Attention PRA Office, 440 W 200 S #500, Salt Lake City, UT 84101; or by email to *BLM_HQ_PRA_Comments@blm.gov.* Please reference Office of Management and Budget (OMB) Control Number 1004–0103 in the subject line of your comments. Please note that the electronic submission of comments is recommended.

FOR FURTHER INFORMATION CONTACT: To request additional information about this ICR, contact Timothy L. Barnes by email at *tbarnes@blm.gov,* or by telephone at 541–416–6858. Individuals in the United States who are deaf, deafblind, hard of hearing, or have a speech disability may dial 711 (TTY, TDD, or TeleBraille) to access telecommunications relay services. Individuals outside the United States should use the relay services offered within their country to make international calls to the point-of-contact in the United States. You may also view the ICR at *http://www.reginfo.gov/public/do/PRAMain.*

SUPPLEMENTARY INFORMATION: In accordance with the Paperwork Reduction Act of 1995 (PRA, 44 U.S.C. 3501 *et seq.*) and 5 CFR 1320.8(d)(1), all information collections require approval under the PRA. We may not conduct or sponsor, and you are not required to respond to a collection of information unless it displays a currently valid OMB control number.

As part of our continuing effort to reduce paperwork and respondent burdens, we invite the public and other Federal agencies to comment on new, proposed, revised, and continuing collections of information. This helps us assess the impact of our information collection requirements and minimize the public's reporting burden. It also helps the public understand our information collection requirements and provide the requested data in the desired format.

We are especially interested in public comment addressing the following:

(1) Whether the collection of information is necessary for the proper performance of the functions of the agency, including whether the information will have practical utility;

(2) The accuracy of our estimate of the burden for this collection of information, including the validity of the methodology and assumptions used;

(3) Ways to enhance the quality, utility, and clarity of the information to be collected; and

(4) How the agency might minimize the burden of the collection of information on those who are to respond, including the use of appropriate automated, electronic, mechanical, or other technological collection techniques or other forms of information technology, *e.g.,* permitting electronic submission of response.

Comments that you submit in response to this notice are a matter of public record. We will include or summarize each comment in our request to OMB to approve this ICR. Before including your address, phone number, email address, or other personal identifying information in your comment, you should be aware that your entire comment—including your personal identifying information—may be made publicly available at any time. While you can ask us in your comment to withhold your personal identifying information from public review, we cannot guarantee that we will be able to do so.

Abstract: The BLM is required by the Materials Act of 1947 (30 U.S.C. 601 and 602) and section 302 of the Federal Land Policy and Management Act (43 U.S.C. 1732) to manage the sale and free use of mineral materials that are not subject to mineral leasing or location under the mining laws (*e.g.,* common varieties of sand, stone, gravel, pumice, pumicite, clay, and rock). The Materials Act authorizes the BLM to sell these mineral materials at fair market value and to grant free-use permits to government agencies and nonprofit organizations. To obtain a sales contract or free-use permit, an applicant must submit information to identify themselves, the location of the site, and the proposed method to remove the mineral materials. The BLM uses the information to process each request for disposal, determine whether the request to dispose of mineral materials meets statutory requirements, and whether to approve the request. This OMB Control Number is currently scheduled to expire on February 29, 2024. The BLM plans to request that OMB renew this OMB Control Number for an additional three years.

Title of Collection: Mineral Materials Disposal (43 CFR part 3600).

OMB Control Number: 1004–0103.

Form Numbers: Form 3600–9, *Contract for the Sale of Mineral Materials.*

Type of Review: Extension of a currently approved collection.

Respondents/Affected Public: An estimated 265 businesses annually submit applications to purchase or use mineral materials from public lands.

Total Estimated Number of Annual Respondents: 265.

Total Estimated Number of Annual Responses: 4,912.

Estimated Completion Time per Response: Varies from 30 minutes to 30 hours.

Total Estimated Number of Annual Burden Hours: 6,392.

Respondent's Obligation: Required to obtain or retain a benefit.

Frequency of Collection: On occasion.

Total Estimated Annual Nonhour Burden Cost: $126,024.

An agency may not conduct or sponsor and, notwithstanding any other provision of law, a person is not required to respond to a collection of information unless it displays a currently valid OMB control number.

The authority for this action is the Paperwork Reduction Act of 1995 (44 U.S.C. 3501 *et seq.*).

Darrin A. King,

Information Collection Clearance Officer.

[FR Doc. 2023–08899 Filed 4–26–23; 8:45 am]

BILLING CODE 4310–84–P

DEPARTMENT OF THE INTERIOR

National Park Service

[NPS–WASO–NAGPRA–NPS0035721; PPWOCRADN0–PCU00RP14.R50000]

Notice of Inventory Completion: Rochester Museum & Science Center, Rochester, NY

AGENCY: National Park Service, Interior.

ACTION: Notice.

SUMMARY: In accordance with the Native American Graves Protection and Repatriation Act (NAGPRA), the Rochester Museum & Science Center has completed an inventory of human remains and has determined that there is a cultural affiliation between the human remains and Indian Tribes or Native Hawaiian organizations in this notice. The human remains were removed from Delaware County, NY.

DATES: Repatriation of the human remains in this notice may occur on or after May 30, 2023.

ADDRESSES: Kathryn Murano Santos, Rochester Museum & Science Center, 657 East Avenue, Rochester, NY 14607, telephone (585) 697–1929, *email kmurano@rmsc.org.*

SUPPLEMENTARY INFORMATION: This notice is published as part of the National Park Service's administrative responsibilities under NAGPRA. The determinations in this notice are the sole responsibility of the Rochester Museum & Science Center. The National Park Service is not responsible for the determinations in this notice. Additional information on the determinations in this notice, including the results of consultation, can be found in the inventory or related records held by the Rochester Museum & Science Center.

Description

Human remains representing, at minimum, one individual were removed from the Hilltop Site (Dhi 001) in Delaware County, NY. The individual was excavated by the Rochester Museum on an unknown date. No known individual was identified. No associated funerary objects are present.

Cultural Affiliation

The human remains in this notice are connected to one or more identifiable earlier groups, tribes, peoples, or cultures. There is a relationship of shared group identity between the identifiable earlier groups, tribes, peoples, or cultures and one or more Indian Tribes or Native Hawaiian organizations. The following type of information was used to reasonably trace the relationship: geographical.

Determinations

Pursuant to NAGPRA and its implementing regulations, and after consultation with the appropriate Indian Tribes and Native Hawaiian organizations, the Rochester Museum & Science Center has determined that:

- The human remains described in this notice represent the physical remains of one individual of Native American ancestry.
- There is a relationship of shared group identity that can be reasonably traced between the human remains described in this notice and the Delaware Nation, Oklahoma; Delaware Tribe of Indians; Oneida Indian Nation; Oneida Nation; Saint Regis Mohawk Tribe; and the Stockbridge Munsee Community, Wisconsin.

Requests for Repatriation

Written requests for repatriation of the human remains in this notice must be sent to the Responsible Official identified in **ADDRESSES**. Requests for repatriation may be submitted by:

1. Any one or more of the Indian Tribes or Native Hawaiian organizations identified in this notice.

2. Any lineal descendant, Indian Tribe, or Native Hawaiian organization

not identified in this notice who shows, by a preponderance of the evidence, that the requestor is a lineal descendant or a culturally affiliated Indian Tribe or Native Hawaiian organization.

Repatriation of the human remains in this notice to a requestor may occur on or after May 30, 2023. If competing requests for repatriation are received, the Rochester Museum & Science Center must determine the most appropriate requestor prior to repatriation. Requests for joint repatriation of the human remains are considered a single request and not competing requests. The Rochester Museum & Science Center is responsible for sending a copy of this notice to the Indian Tribes identified in this notice.

Authority: Native American Graves Protection and Repatriation Act, 25 U.S.C. 3003, and the implementing regulations, 43 CFR 10.9, 10.10, and 10.14.

Dated: April 19, 2023.

Melanie O'Brien,

Manager, National NAGPRA Program.

[FR Doc. 2023–08888 Filed 4–26–23; 8:45 am]

BILLING CODE 4312–52–P

DEPARTMENT OF THE INTERIOR

National Park Service

[NPS–WASO–NAGPRA–NPS0035720; PPWOCRADN0–PCU00RP14.R50000]

Notice of Inventory Completion: Rochester Museum & Science Center, Rochester, NY

AGENCY: National Park Service, Interior.

ACTION: Notice.

SUMMARY: In accordance with the Native American Graves Protection and Repatriation Act (NAGPRA), the Rochester Museum & Science Center has completed an inventory of human remains and has determined that there is a cultural affiliation between the human remains and Indian Tribes or Native Hawaiian organizations in this notice. The human remains were removed from Dutchess County, NY.

DATES: Repatriation of the human remains in this notice may occur on or after May 30, 2023.

ADDRESSES: Kathryn Murano Santos, Rochester Museum & Science Center, 657 East Avenue, Rochester, NY 14607, telephone (585) 697–1929, email *kmurano@rmsc.org.*

SUPPLEMENTARY INFORMATION: This notice is published as part of the National Park Service's administrative responsibilities under NAGPRA. The determinations in this notice are the sole responsibility of the Rochester Museum & Science Center. The National Park Service is not responsible for the determinations in this notice. Additional information on the determinations in this notice, including the results of consultation, can be found in the inventory or related records held by the Rochester Museum & Science Center.

Description

Human remains representing, at minimum, three individuals were removed from the South Cruger Island Site in Dutchess County, NY. The individuals were collected by James Shafer and donated in 1947. No known individuals were identified. No associated funerary objects are present.

Cultural Affiliation

The human remains in this notice are connected to one or more identifiable earlier groups, tribes, peoples, or cultures. There is a relationship of shared group identity between the identifiable earlier groups, tribes, peoples, or cultures and one or more Indian Tribes or Native Hawaiian organizations. The following type of information was used to reasonably trace the relationship: geographical.

Determinations

Pursuant to NAGPRA and its implementing regulations, and after consultation with the appropriate Indian Tribes and Native Hawaiian organizations, the Rochester Museum & Science Center has determined that:

- The human remains described in this notice represent the physical remains of three individuals of Native American ancestry.
- There is a relationship of shared group identity that can be reasonably traced between the human remains described in this notice and the Delaware Nation, Oklahoma; Delaware Tribe of Indians; and the Stockbridge Munsee Community, Wisconsin.

Requests for Repatriation

Written requests for repatriation of the human remains in this notice must be sent to the Responsible Official identified in **ADDRESSES**. Requests for repatriation may be submitted by:

1. Any one or more of the Indian Tribes or Native Hawaiian organizations identified in this notice.
2. Any lineal descendant, Indian Tribe, or Native Hawaiian organization not identified in this notice who shows, by a preponderance of the evidence, that the requestor is a lineal descendant or a culturally affiliated Indian Tribe or Native Hawaiian organization.

Repatriation of the human remains in this notice to a requestor may occur on or after May 30, 2023. If competing requests for repatriation are received, the Rochester Museum & Science Center must determine the most appropriate requestor prior to repatriation. Requests for joint repatriation of the human remains are considered a single request and not competing requests. The Rochester Museum & Science Center is responsible for sending a copy of this notice to the Indian Tribes identified in this notice.

Authority: Native American Graves Protection and Repatriation Act, 25 U.S.C. 3003, and the implementing regulations, 43 CFR 10.9, 10.10, and 10.14.

Dated: April 19, 2023.

Melanie O'Brien,

Manager, National NAGPRA Program.

[FR Doc. 2023–08887 Filed 4–26–23; 8:45 am]

BILLING CODE 4312–52–P

DEPARTMENT OF THE INTERIOR

National Park Service

[NPS–WASO–NAGPRA–NPS0035726; PPWOCRADN0–PCU00RP14.R50000]

Notice of Inventory Completion: Rochester Museum & Science Center, Rochester, NY

AGENCY: National Park Service, Interior.

ACTION: Notice.

SUMMARY: In accordance with the Native American Graves Protection and Repatriation Act (NAGPRA), the Rochester Museum & Science Center (RMSC) has completed an inventory of human remains and associated funerary objects and has determined that there is a cultural affiliation between the human remains and associated funerary objects and Indian Tribes or Native Hawaiian organizations in this notice. The human remains and associated funerary objects were removed from Chenango, Jefferson, Madison, and Oneida Counties, NY.

DATES: Repatriation of the human remains and associated funerary objects in this notice may occur on or after May 29, 2023.

ADDRESSES: Kathryn Murano Santos, Rochester Museum & Science Center, 657 East Avenue, Rochester, NY 14607, telephone (585) 697–1929, email *kmurano@rmsc.org.*

SUPPLEMENTARY INFORMATION: This notice is published as part of the National Park Service's administrative responsibilities under NAGPRA. The determinations in this notice are the sole responsibility of the Rochester

Museum & Science Center. The National Park Service is not responsible for the determinations in this notice. Additional information on the determinations in this notice, including the results of consultation, can be found in the inventory or related records held by the Rochester Museum & Science Center.

Description

Human remains representing, at minimum, two individuals were removed from the Partridge Site (Una 001) in Chenango County, NY. These human remains were excavated by the RMSC in 1935. No known individuals were identified. No associated funerary objects are present.

Human remains representing, at minimum, two individuals were removed from the Hunter Site (Hmd 002) in Jefferson County, NY. The human remains of one individual were collected near the outlet of Red Lake by Earl Abbott and donated to the RMSC in 1946. The human remains of a second individual were removed by an unknown individual on an unknown date. No known individuals were identified. No associated funerary objects are present.

Human remains representing, at minimum, one individual were removed from the Muskalonge Lake Site (Hmd 001) in Jefferson County, NY. These human remains were excavated by W.A. Ritchie for the RMSC sometime between 1932 and 1933. No known individual was identified. No associated funerary objects are present.

Human remains representing, at minimum, two individuals were removed from the town of Cazenovia in Madison County, NY. These human remains were acquired by an unknown collector around 1919, and they were purchased by the RMSC from Alvin H. Dewey sometime between 1928 and 1929. No known individuals were identified. The one associated funerary object is a necklace with animal and human teeth. It is currently missing.

Human remains representing, at minimum, one individual were removed from the west bank of Oneida Creek in Madison County, NY. These human remains were collected by Henry Wemple of Vernon Center in 1958, and they were donated to the RMSC in 1961. No known individual was identified. The one associated funerary object is an animal bone.

Human remains representing, at minimum, four individuals were removed from the Sherril Site in Oneida County, NY. These human remains were collected by Herbert Bigford, and they were then donated to the RMSC in 1941. No known individuals were identified. No associated funerary objects are present.

Human remains representing, at minimum, two individuals were removed from Teelins Site in Oneida County, NY. These human remains were collected by Gilbert Hagerty, and they were donated to the RMSC in 1979. No known individuals were identified. Of the nine associated funerary objects, eight are present and accounted for in the RMSC collections and one object is currently missing. The eight present associated funerary objects are one flint chunk; one lot of faunal remains; three lots of body sherds; two clam shells; and one broken projectile point. The currently missing associated funerary object is one lot of soil.

Cultural Affiliation

The human remains and associated funerary objects in this notice are connected to one or more identifiable earlier groups, tribes, peoples, or cultures. There is a relationship of shared group identity between the identifiable earlier groups, tribes, peoples, or cultures and one or more Indian Tribes or Native Hawaiian organizations. The following type of information was used to reasonably trace the relationship: geographical.

Determinations

Pursuant to NAGPRA and its implementing regulations, and after consultation with the appropriate Indian Tribes and Native Hawaiian organizations, the Rochester Museum & Science Center has determined that:

- The human remains described in this notice represent the physical remains of 14 individuals of Native American ancestry.
- The 11 objects described in this notice are reasonably believed to have been placed with or near individual human remains at the time of death or later as part of the death rite or ceremony.
- There is a relationship of shared group identity that can be reasonably traced between the human remains and associated funerary objects described in this notice and the Oneida Indian Nation and the Oneida Nation.

Requests for Repatriation

Written requests for repatriation of the human remains and associated funerary objects in this notice must be sent to the Responsible Official identified in **ADDRESSES.** Requests for repatriation may be submitted by:

1. Any one or more of the Indian Tribes or Native Hawaiian organizations identified in this notice.

2. Any lineal descendant, Indian Tribe, or Native Hawaiian organization not identified in this notice who shows, by a preponderance of the evidence, that the requestor is a lineal descendant or a culturally affiliated Indian Tribe or Native Hawaiian organization.

Repatriation of the human remains and associated funerary objects in this notice to a requestor may occur on or after May 29, 2023. If competing requests for repatriation are received, the Rochester Museum & Science Center must determine the most appropriate requestor prior to repatriation. Requests for joint repatriation of the human remains and associated funerary objects are considered a single request and not competing requests. The Rochester Museum & Science Center is responsible for sending a copy of this notice to the Indian Tribes identified in this notice.

Authority: Native American Graves Protection and Repatriation Act, 25 U.S.C. 3003, and the implementing regulations, 43 CFR 10.9, 10.10, and 10.14.

Dated: April 19, 2023.

Melanie O'Brien,

Manager, National NAGPRA Program.

[FR Doc. 2023–08892 Filed 4–26–23; 8:45 am]

BILLING CODE 4312–52–P

DEPARTMENT OF THE INTERIOR

National Park Service

[NPS–WASO–NAGPRA–NPS0035728; PPWOCRADN0–PCU00RP14.R50000]

Notice of Inventory Completion: Rochester Museum & Science Center, Rochester, NY

AGENCY: National Park Service, Interior.

ACTION: Notice.

SUMMARY: In accordance with the Native American Graves Protection and Repatriation Act (NAGPRA), the Rochester Museum & Science Center (RMSC) has completed an inventory of human remains and associated funerary objects and has determined that there is a cultural affiliation between the human remains and associated funerary objects and Indian Tribes or Native Hawaiian organizations in this notice. The human remains and associated funerary objects were removed from Ulster County, NY.

DATES: Repatriation of the human remains and associated funerary objects in this notice may occur on or after May 30, 2023.

ADDRESSES: Kathryn Murano Santos, Rochester Museum & Science Center, 657 East Avenue, Rochester, NY 14607,

telephone (585) 697–1929, email *kmurano@rmsc.org.*

SUPPLEMENTARY INFORMATION: This notice is published as part of the National Park Service's administrative responsibilities under NAGPRA. The determinations in this notice are the sole responsibility of the Rochester Museum & Science Center. The National Park Service is not responsible for the determinations in this notice. Additional information on the determinations in this notice, including the results of consultation, can be found in the inventory or related records held by the Rochester Museum & Science Center.

Description

Human remains representing, at minimum, two individuals were removed near the town of Kingston in Ulster County, NY. The individuals were collected by James Shafer and donated to the RMSC in 1947. No known individuals were identified. The one associated funerary object is one lot of soil with inclusions (possibly bone fragments).

Cultural Affiliation

The human remains and associated funerary objects in this notice are connected to one or more identifiable earlier groups, tribes, peoples, or cultures. There is a relationship of shared group identity between the identifiable earlier groups, tribes, peoples, or cultures and one or more Indian Tribes or Native Hawaiian organizations. The following type of information was used to reasonably trace the relationship: geographical.

Determinations

Pursuant to NAGPRA and its implementing regulations, and after consultation with the appropriate Indian Tribes and Native Hawaiian organizations, the Rochester Museum & Science Center has determined that:

- The human remains described in this notice represent the physical remains of two individuals of Native American ancestry.
- The one object described in this notice is reasonably believed to have been placed with or near individual human remains at the time of death or later as part of the death rite or ceremony.
- There is a relationship of shared group identity that can be reasonably traced between the human remains and associated funerary objects described in this notice and the Delaware Nation, Oklahoma; Delaware Tribe of Indians; Saint Regis Mohawk Tribe; and the Stockbridge Munsee Community, Wisconsin.

Requests for Repatriation

Written requests for repatriation of the human remains and associated funerary objects in this notice must be sent to the Responsible Official identified in **ADDRESSES**. Requests for repatriation may be submitted by:

1. Any one or more of the Indian Tribes or Native Hawaiian organizations identified in this notice.
2. Any lineal descendant, Indian Tribe, or Native Hawaiian organization not identified in this notice who shows, by a preponderance of the evidence, that the requestor is a lineal descendant or a culturally affiliated Indian Tribe or Native Hawaiian organization.

Repatriation of the human remains and associated funerary objects in this notice to a requestor may occur on or after May 30, 2023. If competing requests for repatriation are received, the Rochester Museum & Science Center must determine the most appropriate requestor prior to repatriation. Requests for joint repatriation of the human remains and associated funerary objects are considered a single request and not competing requests. The Rochester Museum & Science Center is responsible for sending a copy of this notice to the Indian Tribes identified in this notice.

Authority: Native American Graves Protection and Repatriation Act, 25 U.S.C. 3003, and the implementing regulations, 43 CFR 10.9, 10.10, and 10.14.

Dated: April 19, 2023.

Melanie O'Brien,

Manager, National NAGPRA Program.

[FR Doc. 2023–08894 Filed 4–26–23; 8:45 am]

BILLING CODE 4312–52–P

DEPARTMENT OF THE INTERIOR

National Park Service

[NPS–WASO–NAGPRA–NPS0035725; PPWOCRADN0–PCU00RP14.R50000]

Notice of Inventory Completion: Rochester Museum & Science Center, Rochester, NY

AGENCY: National Park Service, Interior.

ACTION: Notice.

SUMMARY: In accordance with the Native American Graves Protection and Repatriation Act (NAGPRA), the Rochester Museum & Science Center (RMSC) has completed an inventory of human remains and associated funerary objects and has determined that there is a cultural affiliation between the human remains and associated funerary objects and Indian Tribes or Native Hawaiian organizations in this notice. The human remains and associated funerary objects were removed from Broome County, NY.

DATES: Repatriation of the human remains and associated funerary objects in this notice may occur on or after May 30, 2023.

ADDRESSES: Kathryn Murano Santos, Rochester Museum & Science Center, 657 East Avenue, Rochester, NY 14607, telephone (585) 697–1929, email *kmurano@rmsc.org.*

SUPPLEMENTARY INFORMATION: This notice is published as part of the National Park Service's administrative responsibilities under NAGPRA. The determinations in this notice are the sole responsibility of the Rochester Museum & Science Center. The National Park Service is not responsible for the determinations in this notice. Additional information on the determinations in this notice, including the results of consultation, can be found in the inventory or related records held by the Rochester Museum & Science Center.

Description

Human remains representing, at minimum, 21 individuals were removed from the Castle Creek Site (Bgh 001) in Broome County, NY. The human remains of 17 individuals and four associated funerary objects were collected by the Broome County Historical Society and they were donated to the RMSC by Foster Disinger in 1940. The human remains of two individuals were donated to the RMSC by Clarence Alhart, through W.A. Ritchie, in June of 1933. The human remains of one individual and two associated funerary objects were removed during an excavation conducted by the Rochester Museum of Arts and Sciences (the predecessor of the RMSC) sometime between 1931 and 1933. The human remains of one individual were removed by an unknown person on an unknown date. No known individuals were identified. The six associated funerary objects are one deer vertebra; three faunal bone fragments; and two worked bone fragments. The two worked bone fragments, which were collected during the Rochester Museum expedition, are currently missing.

Cultural Affiliation

The human remains and associated funerary objects in this notice are connected to one or more identifiable earlier groups, tribes, peoples, or cultures. There is a relationship of

shared group identity between the identifiable earlier groups, tribes, peoples, or cultures and one or more Indian Tribes or Native Hawaiian organizations. The following types of information were used to reasonably trace the relationship: geographical and expert opinion.

Determinations

Pursuant to NAGPRA and its implementing regulations, and after consultation with the appropriate Indian Tribes and Native Hawaiian organizations, the Rochester Museum & Science Center has determined that:

- The human remains described in this notice represent the physical remains of 21 individuals of Native American ancestry.
- The six objects described in this notice are reasonably believed to have been placed with or near individual human remains at the time of death or later as part of the death rite or ceremony.
- There is a relationship of shared group identity that can be reasonably traced between the human remains and associated funerary objects described in this notice and the Onondaga Nation.

Requests for Repatriation

Written requests for repatriation of the human remains and associated funerary objects in this notice must be sent to the Responsible Official identified in **ADDRESSES**. Requests for repatriation may be submitted by:

1. Any one or more of the Indian Tribes or Native Hawaiian organizations identified in this notice.
2. Any lineal descendant, Indian Tribe, or Native Hawaiian organization not identified in this notice who shows, by a preponderance of the evidence, that the requestor is a lineal descendant or a culturally affiliated Indian Tribe or Native Hawaiian organization.

Repatriation of the human remains and associated funerary objects in this notice to a requestor may occur on or after May 30, 2023. If competing requests for repatriation are received, the Rochester Museum & Science Center must determine the most appropriate requestor prior to repatriation. Requests for joint repatriation of the human remains and associated funerary objects are considered a single request and not competing requests. The Rochester Museum & Science Center is responsible for sending a copy of this notice to the Indian Tribe identified in this notice.

Authority: Native American Graves Protection and Repatriation Act, 25 U.S.C. 3003, and the implementing regulations, 43 CFR 10.9, 10.10, and 10.14.

Dated: April 19, 2023.

Melanie O'Brien,

Manager, National NAGPRA Program.

[FR Doc. 2023–08891 Filed 4–26–23; 8:45 am]

BILLING CODE 4312–52–P

DEPARTMENT OF THE INTERIOR

National Park Service

[NPS–WASO–NAGPRA–NPS0035722; PPWOCRADN0–PCU00RP14.R50000]

Notice of Inventory Completion: Rochester Museum & Science Center, Rochester, NY

AGENCY: National Park Service, Interior.

ACTION: Notice.

SUMMARY: In accordance with the Native American Graves Protection and Repatriation Act (NAGPRA), the Rochester Museum & Science Center has completed an inventory of human remains and associated funerary objects and has determined that there is a cultural affiliation between the human remains and associated funerary objects and Indian Tribes or Native Hawaiian organizations in this notice. The human remains and associated funerary objects were removed from Jefferson County, NY.

DATES: Repatriation of the human remains and associated funerary objects in this notice may occur on or after May 30, 2023.

ADDRESSES: Kathryn Murano Santos, Rochester Museum & Science Center, 657 East Avenue, Rochester, NY 14607, telephone (585) 697–1929, email *kmurano@rmsc.org.*

SUPPLEMENTARY INFORMATION: This notice is published as part of the National Park Service's administrative responsibilities under NAGPRA. The determinations in this notice are the sole responsibility of the Rochester Museum & Science Center. The National Park Service is not responsible for the determinations in this notice. Additional information on the determinations in this notice, including the results of consultation, can be found in the inventory or related records held by the Rochester Museum & Science Center.

Description

Human remains representing, at minimum, one individual were removed from a farm in the Chaumont Bay area in Jefferson County, NY. These human remains were purchased by the Rochester Museum & Science Center (RMSC) from Alvin H. Dewey sometime between 1928 and 1929. No known individual was identified. No associated funerary objects are present.

Human remains representing, at minimum, four individuals were removed from the Long Bay Ossuary 3 Site (Cln 003) in Jefferson County, NY. These human remains were excavated by W.A. Ritchie on behalf of the RMSC in 1932 and 1933. No known individuals were identified. The four associated funerary objects are one lot of flint flakes; one antler projectile point; one scraper blade; and one lot of sherds. These funerary objects are currently missing.

Human remains representing, at minimum, 17 individuals were removed from a location near Cape Vincent in Jefferson County, NY. These human remains were collected by J.B. Nichols and donated to RMSC in 1948. The one associated funerary object is a pottery sherd.

Human remains representing, at minimum, one individual were removed from the Pillar Point Site (Skh 001) in Jefferson County, NY. These human remains were excavated by W.A. Ritchie on behalf of the RMSC in 1936. No known individual was identified. No associated funerary objects are present.

Cultural Affiliation

The human remains and associated funerary objects in this notice are connected to one or more identifiable earlier groups, tribes, peoples, or cultures. There is a relationship of shared group identity between the identifiable earlier groups, tribes, peoples, or cultures and one or more Indian Tribes or Native Hawaiian organizations. The following type of information was used to reasonably trace the relationship: geographical.

Determinations

Pursuant to NAGPRA and its implementing regulations, and after consultation with the appropriate Indian Tribes and Native Hawaiian organizations, the Rochester Museum & Science Center has determined that:

- The human remains described in this notice represent the physical remains of 23 individuals of Native American ancestry.
- The five objects described in this notice are reasonably believed to have been placed with or near individual human remains at the time of death or later as part of the death rite or ceremony.
- There is a relationship of shared group identity that can be reasonably traced between the human remains and associated funerary objects described in this notice and the Oneida Indian

Nation; Oneida Nation; Onondaga Nation; and the Wyandotte Nation.

Requests for Repatriation

Written requests for repatriation of the human remains and associated funerary objects in this notice must be sent to the Responsible Official identified in **ADDRESSES**. Requests for repatriation may be submitted by:

1. Any one or more of the Indian Tribes or Native Hawaiian organizations identified in this notice.

2. Any lineal descendant, Indian Tribe, or Native Hawaiian organization not identified in this notice who shows, by a preponderance of the evidence, that the requestor is a lineal descendant or a culturally affiliated Indian Tribe or Native Hawaiian organization.

Repatriation of the human remains and associated funerary objects in this notice to a requestor may occur on or after May 29, 2023. If competing requests for repatriation are received, the Rochester Museum & Science Center must determine the most appropriate requestor prior to repatriation. Requests for joint repatriation of the human remains and associated funerary objects are considered a single request and not competing requests. The Rochester Museum & Science Center is responsible for sending a copy of this notice to the Indian Tribes identified in this notice.

Authority: Native American Graves Protection and Repatriation Act, 25 U.S.C. 3003, and the implementing regulations, 43 CFR 10.9, 10.10, and 10.14.

Dated: April 19, 2023.

Melanie O'Brien,

Manager, National NAGPRA Program.

[FR Doc. 2023–08889 Filed 4–26–23; 8:45 am]

BILLING CODE 4312–52–P

DEPARTMENT OF THE INTERIOR

National Park Service

[NPS–WASO–NAGPRA–NPS0035717; PPWOCRADN0–PCU00RP14.R50000]

Notice of Inventory Completion: Rochester Museum & Science Center, Rochester, NY

AGENCY: National Park Service, Interior.

ACTION: Notice.

SUMMARY: In accordance with the Native American Graves Protection and Repatriation Act (NAGPRA), the Rochester Museum & Science Center has completed an inventory of human remains and has determined that there is a cultural affiliation between the human remains and Indian Tribes or Native Hawaiian organizations in this notice. The human remains were removed from Allegany County, NY.

DATES: Repatriation of the human remains in this notice may occur on or after May 30, 2023.

ADDRESSES: Kathryn Murano Santos, Rochester Museum & Science Center, 657 East Avenue, Rochester, NY 14607, telephone (585) 697–1929, email *kmurano@rmsc.org.*

SUPPLEMENTARY INFORMATION: This notice is published as part of the National Park Service's administrative responsibilities under NAGPRA. The determinations in this notice are the sole responsibility of the Rochester Museum & Science Center. The National Park Service is not responsible for the determinations in this notice. Additional information on the determinations in this notice, including the results of consultation, can be found in the inventory or related records held by the Rochester Museum & Science Center.

Description

Human remains representing, at minimum, two individuals were removed from the Blake Farm Site in Allegany County, NY. In 1937, the human remains were excavated during a Rochester Museum & Science Center expedition. No known individuals were identified. No associated funerary objects are present.

Human remains representing, at minimum, one individual were removed from the Saunders Site (Blt 001) in Allegany County, NY. In 1930, the human remains were excavated during a Rochester Museum & Science Center expedition. No known individual was identified. No associated funerary objects are present.

Cultural Affiliation

The human remains in this notice are connected to one or more identifiable earlier groups, tribes, peoples, or cultures. There is a relationship of shared group identity between the identifiable earlier groups, tribes, peoples, or cultures and one or more Indian Tribes or Native Hawaiian organizations. The following type of information was used to reasonably trace the relationship: geographical.

Determinations

Pursuant to NAGPRA and its implementing regulations, and after consultation with the appropriate Indian Tribes and Native Hawaiian organizations, the Rochester Museum & Science Center has determined that:

- The human remains described in this notice represent the physical remains of three individuals of Native American ancestry.
- There is a relationship of shared group identity that can be reasonably traced between the human remains described in this notice and the Sac & Fox Nation of Missouri in Kansas and Nebraska; Sac & Fox Nation, Oklahoma; Sac & Fox Tribe of the Mississippi in Iowa; Seneca Nation of Indians; Seneca-Cayuga Nation; and the Tonawanda Band of Seneca.

Requests for Repatriation

Written requests for repatriation of the human remains in this notice must be sent to the Responsible Official identified in **ADDRESSES**. Requests for repatriation may be submitted by:

1. Any one or more of the Indian Tribes or Native Hawaiian organizations identified in this notice.

2. Any lineal descendant, Indian Tribe, or Native Hawaiian organization not identified in this notice who shows, by a preponderance of the evidence, that the requestor is a lineal descendant or a culturally affiliated Indian Tribe or Native Hawaiian organization.

Repatriation of the human remains in this notice to a requestor may occur on or after May 30, 2023. If competing requests for repatriation are received, the Rochester Museum & Science Center must determine the most appropriate requestor prior to repatriation. Requests for joint repatriation of the human remains are considered a single request and not competing requests. The Rochester Museum & Science Center is responsible for sending a copy of this notice to the Indian Tribes identified in this notice.

Authority: Native American Graves Protection and Repatriation Act, 25 U.S.C. 3003, and the implementing regulations, 43 CFR 10.9, 10.10, and 10.14.

Dated: April 19, 2023.

Melanie O'Brien,

Manager, National NAGPRA Program.

[FR Doc. 2023–08885 Filed 4–26–23; 8:45 am]

BILLING CODE 4312–52–P

DEPARTMENT OF THE INTERIOR

National Park Service

[NPS–WASO–NAGPRA–NPS0035724; PPWOCRADN0–PCU00RP14.R50000]

Notice of Inventory Completion: Rochester Museum & Science Center, Rochester, NY

AGENCY: National Park Service, Interior.

ACTION: Notice.

SUMMARY: In accordance with the Native American Graves Protection and Repatriation Act (NAGPRA), the Rochester Museum & Science Center has completed an inventory of human remains and associated funerary objects and has determined that there is a cultural affiliation between the human remains and associated funerary objects and Indian Tribes or Native Hawaiian organizations in this notice. The human remains and associated funerary objects were removed from Jefferson and St. Lawrence Counties, NY.

DATES: Repatriation of the human remains and associated funerary objects in this notice may occur on or after May 29, 2023.

ADDRESSES: Kathryn Murano Santos, Rochester Museum & Science Center, 657 East Avenue, Rochester, NY 14607, telephone (585) 697–1929, email *kmurano@rmsc.org.*

SUPPLEMENTARY INFORMATION: This notice is published as part of the National Park Service's administrative responsibilities under NAGPRA. The determinations in this notice are the sole responsibility of the Rochester Museum & Science Center. The National Park Service is not responsible for the determinations in this notice. Additional information on the determinations in this notice, including the results of consultation, can be found in the inventory or related records held by the Rochester Museum & Science Center.

Description

Human remains representing, at minimum, one individual were removed from Nobby Island on the St. Lawrence River in Jefferson County, NY. The Rochester Museum & Science Center acquired these human remains from Alvin H. Dewey sometime between 1928 and 1929. No known individual was identified. No associated funerary objects are present.

Human remains representing, at minimum, one individual were removed from Old Fort on Carlton Island, on the St. Lawrence River, in Jefferson County, NY. These human remains were removed in 1877, and they were acquired by the Rochester Museum & Science Center from Alvin H. Dewey sometime between 1928 and 1929. No known individual was identified. No associated funerary objects are present.

At an unknown date, human remains representing, at minimum, one individual were removed from the Long Sault Islands (Msa 002?) in St. Lawrence County, NY. No known individual was identified. The one associated funerary object is one lot of soil.

Cultural Affiliation

The human remains and associated funerary objects in this notice are connected to one or more identifiable earlier groups, tribes, peoples, or cultures. There is a relationship of shared group identity between the identifiable earlier groups, tribes, peoples, or cultures and one or more Indian Tribes or Native Hawaiian organizations. The following type of information was used to reasonably trace the relationship: geographical.

Determinations

Pursuant to NAGPRA and its implementing regulations, and after consultation with the appropriate Indian Tribes and Native Hawaiian organizations, the Rochester Museum & Science Center has determined that:

- The human remains described in this notice represent the physical remains of three individuals of Native American ancestry.
- The one object described in this notice is reasonably believed to have been placed with or near individual human remains at the time of death or later as part of the death rite or ceremony.
- There is a relationship of shared group identity that can be reasonably traced between the human remains and associated funerary objects described in this notice and the Oneida Indian Nation; Oneida Nation; Onondaga Nation; Saint Regis Mohawk Tribe; and the Wyandotte Nation.

Requests for Repatriation

Written requests for repatriation of the human remains and associated funerary objects in this notice must be sent to the Responsible Official identified in **ADDRESSES**. Requests for repatriation may be submitted by:

1. Any one or more of the Indian Tribes or Native Hawaiian organizations identified in this notice.
2. Any lineal descendant, Indian Tribe, or Native Hawaiian organization not identified in this notice who shows, by a preponderance of the evidence, that the requestor is a lineal descendant or a culturally affiliated Indian Tribe or Native Hawaiian organization.

Repatriation of the human remains and associated funerary objects in this notice to a requestor may occur on or after May 29, 2023. If competing requests for repatriation are received, the Rochester Museum & Science Center must determine the most appropriate requestor prior to repatriation. Requests for joint repatriation of the human remains and associated funerary objects are considered a single request and not competing requests. The Rochester Museum & Science Center is responsible for sending a copy of this notice to the Indian Tribes identified in this notice.

Authority: Native American Graves Protection and Repatriation Act, 25 U.S.C. 3003, and the implementing regulations, 43 CFR 10.9, 10.10, and 10.14.

Dated: April 20, 2023.

Melanie O'Brien,

Manager, National NAGPRA Program.

[FR Doc. 2023–08896 Filed 4–26–23; 8:45 am]

BILLING CODE 4312–52–P

DEPARTMENT OF THE INTERIOR

National Park Service

[NPS–WASO–NAGPRA–NPS0035719; PPWOCRADN0–PCU00RP14.R50000]

Notice of Inventory Completion: Rochester Museum & Science Center, Rochester, NY

AGENCY: National Park Service, Interior.

ACTION: Notice.

SUMMARY: In accordance with the Native American Graves Protection and Repatriation Act (NAGPRA), the Rochester Museum & Science Center (RMSC) has completed an inventory of human remains and associated funerary objects and has determined that there is a cultural affiliation between the human remains and associated funerary objects and Indian Tribes or Native Hawaiian organizations in this notice. The human remains and associated funerary objects were removed from Cayuga County, NY.

DATES: Repatriation of the human remains and associated funerary objects in this notice may occur on or after May 29, 2023.

ADDRESSES: Kathryn Murano Santos, Rochester Museum & Science Center, 657 East Avenue, Rochester, NY 14607, telephone (585) 697–1929, email *kmurano@rmsc.org.*

SUPPLEMENTARY INFORMATION: This notice is published as part of the National Park Service's administrative responsibilities under NAGPRA. The determinations in this notice are the sole responsibility of the Rochester Museum & Science Center. The National Park Service is not responsible for the determinations in this notice. Additional information on the determinations in this notice, including the results of consultation, can be found in the inventory or related records held by the Rochester Museum & Science Center.

Description

Human remains representing, at minimum, 23 individuals were removed from the Backus site (Aub 002) in Cayuga County, NY. The human remains of twenty-two individuals and one associated funerary object were excavated by H.C. Follette during an RMSC expedition in 1929, and the human remains of one individual were gifted to the RMSC by an unknown individual and are part of the Greene Collection. No known individuals were identified. The one associated funerary object is one lot of soil.

Human remains representing, at minimum, four individuals were removed from the Bluff Pointe site (Wpt 010) in Cayuga County, NY. The human remains of an individual were acquired by C. Armbruster in 1938, the human remains of an individual were collected by Harold Secor and donated to the RMSC in 1948, and the human remains of two individuals and two associated funerary objects were acquired through an RMSC expedition in 1939. No known individuals were identified. The two associated funerary objects are one flint scraper and one unworked flint chip.

Human remains representing, at minimum, five individuals were removed from the David Meyers site in Cayuga County, NY. In 1935 and 1974, these human remains were donated to the RMSC as part of the Greene Collection. No known individuals were identified. No associated funerary objects are present.

Human remains representing, at minimum, 140 individuals were removed from the Frontenac Island Site (Aub 004 LR) in Cayuga County, NY. W.A. Ritchie removed the human remains of 136 individuals and 227 associated funerary objects during an RMSC expedition in 1939, and the human remains of four individuals collected by David W. Chase were acquired by W. Cornwell and subsequently donated to the RMSC on November 27, 1962. No known individuals were identified. Of the 227 funerary objects listed, 96 objects are present and accounted for in the RMSC collections and 131 are currently missing. The 96 present associated funerary objects are one imperforate, flat bone awl or needle; eight bone awls; one bone awl from the humerus of an eagle (?); one notched bone awl; one perforated bone awl; two scapula awls; one bone splinter awl; two lots of bone awls; one lot of bear claw cores; one bone; eight bone fragments; one lot of bones; one lot of cremated faunal remains and charcoal; one lot of deer metatarsal splints; one lot of deer teeth; one lot of deer tooth fragments and part of a turtle shell; three chert drills; one chert drill with a missing tip; one faunal bag; one faunal bone; one lot of wild turkey wing faunal bones; four bone fishhooks; one bone fishhook with a missing point; five antler flaking tools; two bone flaking tools; one bone flute with perforations; one bone hair ornament; two perforated bone hair ornaments; one perforated bone hair ornament with a missing tip; one harpoon fragment; three bone harpoons; one lot of bone harpoons; one lot of double-pointed bone implements; one ulna deer awl; one perforated needle; one imperforate antler pendant(?); one perforated bear or wolf canine; one perforated canine tooth; one perforated elk canine; one lot of perforated wolf canines; one side-notched projectile point; five stemmed chert projectile points; one lot of stemmed chert projectile points; one lot of archaic type projectile points; two turtle shell rattles; one scapula scraper; one lot of soil; one lot of unworked long bone splinters; one lot of bird bone splinters; one antler spoon handle fragment(?) of a bird effigy; one lot of teeth; one lot of perforated elk canine teeth; one lot of flint tool blanks; one dull pointed bone tool; one trimmed chert flake or point reject; one bone tube or whistle fragment; two bone tubes; one lot of unworked bone splinters; one bone whistle fragment; and two bone whistles. The 131 missing associated funerary objects are one beveled(?) adze; one Plano convex adze; one antler tine; one antler awl; two scapula awl; one splinter bone awl; one lunate limestone banner stone; one lot of marginella shell beads; three beaver incisors; one split and ground beaver incisor; one schist celt; three sandstone choppers; one shale chopper; one antler effigy comb of two birds with touching beaks; one elk antler cup; one bone dagger; one bone dagger with red paint stripes; one restored conch shell dish; one dog burial; one dog mandible; five partial dog skeletons; one double pointed bone artifact; one chert flake knife; one antler flaking tool; one circular bone flute with oval perforations; one lot of bone gorges; one bone gouge; one perforated bone hair ornament(?); two harpoon bones; one paint stone hematite; one lot of carbonized hickory nut(?) fragments; one lot of decomposed lumps of iron pyrites; one lot of decomposed iron pyrites; two bone knives(?); one marine shell fragment; one unworked limestone (toy?) pebble; one lot of marine shell pendants; one lot of perforated bear canines; one perforated oyster shell; one pitted sandstone hammerstone; three limestone plummets; one corner-notched chert projectile point base; one ground slate projectile point; 17 lots of side-notched chert projectile points; one stemmed projectile point; 21 lots of chert stemmed projectile points; two chert projectile point tips; one lot of side-notched, stemmed chert, projectile points; one lot of side-notched, triangular chert projectile points; one lot of stemmed projectile points; one retouched chert tabular piece; one fragmentary scapula; one fragmentary scapula scraper; five scapula scrapers; one damaged scapula scraper; one fragmentary scapula scraper; one serrated, split antler; one lot of chert spalls; one antler spoon with a restored perforated base; two whetstones; three sandstone whetstones; one intaglio decorated bone whistle; one lot of wolf jaw fragments; one lot of wolf jaws with bases ground away; one ground wolf tooth; one worked antler; six worked beaver incisors; one lot of worked beaver incisors; and one worked conch shell.

Human remains representing, at minimum, two individuals were removed from the Levanna Village (Aub 001) in Cayuga County, NY. The human remains of one individual were collected by George S. Brooks in 1935, and they were purchased by the Rochester Museum & Science Center (the successor of the Rochester Museum of Art and Sciences) on September 24, 1961. The human remains of a second individual were collected by Clayton Mau, and they were donated to the RMSC by Edward Mau on October 24, 1966. No known individuals were identified. No associated funerary objects are present.

Human remains representing, at minimum, one individual were removed from the Meyers Station Site in Cayuga County, NY. In 1991, these human remains were acquired as part of the Greene collection. No known individual was identified. No associated funerary objects are present.

Human remains representing, at minimum, 11 individuals were removed from the Rene Menard Bridge Site (Aub 005) in Cayuga County, NY. The human remains of seven individuals were collected by C. Armbruster in 1939. The human remains of one individual were collected by Harry Schoff, and they were purchased by the RMSC, through E.B. Meader & E.K. Meacham, in 1967. The human remains of two individuals were acquired by the RMSC as part of the Greene collection. The human remains of one individual and 15 associated funerary objects were collected in 1938, and they were purchased by the RMSC from H. Bigford

in 1947. No known individuals were identified. The 15 associated funerary objects are one lot of splinter awls; one lot of bone splinter awls; one lot of beads; one lot of copper beads and human tooth (incorporated as a bead); one lot of discoidal shell beads; one lot of chert drill fragments; one lot of sandstone pestle; one lot of chert projectile points; one lot of conical bone projectile points; one lot of red pigment; one lot of deer scapula scrapers; one lot of beaver incisors; one lot of dog teeth; one lot of turtle shell fragments; and one lot of worked beaver incisors.

Human remains representing, at minimum, one individual were removed from an unknown geographic location in Cayuga County, NY. These human remains were collected by Henry Schoff, and they were purchased by the RMSC from E.B. Meader & E.K. Meacham in 1967. No known individual was identified. No associated funerary objects are present.

Cultural Affiliation

The human remains and associated funerary objects in this notice are connected to one or more identifiable earlier groups, tribes, peoples, or cultures. There is a relationship of shared group identity between the identifiable earlier groups, tribes, peoples, or cultures and one or more Indian Tribes or Native Hawaiian organizations. The following type of information was used to reasonably trace the relationship: geographical.

Determinations

Pursuant to NAGPRA and its implementing regulations, and after consultation with the appropriate Indian Tribes and Native Hawaiian organizations, the Rochester Museum & Science Center has determined that:

- The human remains described in this notice represent the physical remains of 187 individuals of Native American ancestry.
- The 245 objects described in this notice are reasonably believed to have been placed with or near individual human remains at the time of death or later as part of the death rite or ceremony.
- There is a relationship of shared group identity that can be reasonably traced between the human remains and associated funerary objects described in this notice and the Cayuga Nation; Oneida Indian Nation; Oneida Nation; Onondaga Nation; Sac & Fox Nation of Missouri in Kansas and Nebraska; Sac & Fox Nation, Oklahoma; Sac & Fox Tribe of the Mississippi in Iowa; Saint Regis Mohawk Tribe; Seneca Nation of Indians; Seneca-Cayuga Nation; Tonawanda Band of Seneca; Tuscarora Nation; and the Wyandotte Nation.

Requests for Repatriation

Written requests for repatriation of the human remains and associated funerary objects in this notice must be sent to the Responsible Official identified in **ADDRESSES**. Requests for repatriation may be submitted by:

1. Any one or more of the Indian Tribes or Native Hawaiian organizations identified in this notice.
2. Any lineal descendant, Indian Tribe, or Native Hawaiian organization not identified in this notice who shows, by a preponderance of the evidence, that the requestor is a lineal descendant or a culturally affiliated Indian Tribe or Native Hawaiian organization.

Repatriation of the human remains and associated funerary objects in this notice to a requestor may occur on or after May 29, 2023. If competing requests for repatriation are received, the Rochester Museum & Science Center must determine the most appropriate requestor prior to repatriation. Requests for joint repatriation of the human remains and associated funerary objects are considered a single request and not competing requests. The Rochester Museum & Science Center is responsible for sending a copy of this notice to the Indian Tribes identified in this notice.

Authority: Native American Graves Protection and Repatriation Act, 25 U.S.C. 3003, and the implementing regulations, 43 CFR 10.9, 10.10, and 10.14.

Dated: April 19, 2023.

Melanie O'Brien,

Manager, National NAGPRA Program.

[FR Doc. 2023–08886 Filed 4–26–23; 8:45 am]

BILLING CODE 4312–52–P

DEPARTMENT OF THE INTERIOR

National Park Service

[NPS–WASO–NAGPRA–NPS0035723; PPWOCRADN0–PCU00RP14.R50000]

Notice of Inventory Completion: Rochester Museum & Science Center, Rochester, NY

AGENCY: National Park Service, Interior.

ACTION: Notice.

SUMMARY: In accordance with the Native American Graves Protection and Repatriation Act (NAGPRA), the Rochester Museum & Science Center (RMSC) has completed an inventory of human remains and associated funerary objects and has determined that there is a cultural affiliation between the human remains and associated funerary objects and Indian Tribes or Native Hawaiian organizations in this notice. The human remains and associated funerary objects were removed from Onondaga County, NY, and from the vicinity of Seneca Lake, which lies within Schuyler, Seneca, Yates, Ontario Counties, NY.

DATES: Repatriation of the human remains and associated funerary objects in this notice may occur on or after May 30, 2023.

ADDRESSES: Kathryn Murano Santos, Rochester Museum & Science Center, 657 East Avenue, Rochester, NY 14607, telephone (585) 697–1929, email *kmurano@rmsc.org.*

SUPPLEMENTARY INFORMATION: This notice is published as part of the National Park Service's administrative responsibilities under NAGPRA. The determinations in this notice are the sole responsibility of the Rochester Museum & Science Center. The National Park Service is not responsible for the determinations in this notice. Additional information on the determinations in this notice, including the results of consultation, can be found in the inventory or related records held by the Rochester Museum & Science Center.

Description

Human remains representing, at minimum, one individual were removed from the Amber Site in Onondaga County, NY. These human remains were gifted to the RMSC by the Paleontological Research Institute in 1992. No known individual was identified. The five funerary objects are two pieces of hematite; two tube pipe fragments; and one piece of white clay.

Human remains representing, at minimum, one individual were removed from the Felix Site/Jack's Reef Site (Bwv 001) in Onondaga County, NY. These human remains were removed during an RMSC expedition in 1947. No known individual was identified. The two funerary objects are one chert projectile point and one Vinette rim sherd.

Human remains representing, at minimum, four individuals were removed from the Robinson Site (Syr 005; Syr 005–1) in Onondaga County, NY. These human remains were excavated by the RMSC in 1937 and 1938. No known individuals were identified. The six associated funerary objects are one beaver incisor engraver; one section of a clay pipe stem; three notched chert projectile points; and one quartzite scraper.

Human remains representing, at minimum, three individuals were removed from Smith's Island (Syr 007) in Onondaga County, NY. In 1942, the

human remains of two individuals and 11 associated funerary objects were collected by W.A. Ritchie during an RMSC expedition. In May of 1947, the human remains of one individual and one combined lot of associated funerary objects were collected by C.A. Denman and acquired by the RMSC. No known individuals were identified. Of the 12 associated funerary objects, nine are present in the RMSC collections and three are currently missing. The nine present associated funerary objects are one chert projectile point; the faunal remains of two dogs; one granite pebble muller; one ceramic pipe bowl fragment; one side-notched projectile point base; one bone projectile point; one piece of carbonized wood; and one combined lot of tubular copper beads, a copper earring, discoidal shell beads, fragmentary conch shell pendants, and a shroud made from tree bark and animal hides. The three associated funerary objects currently missing are the faunal remains of one dog; one bone projectile point; and one lot of pottery sherds. The RMSC continues to look for the missing objects.

At an unknown date, human remains representing, at minimum, one individual were removed from the vicinity of Seneca Lake, which lies within Schuyler, Seneca, Yates, Ontario Counties, NY. No known individual was identified. No associated funerary objects are present.

Cultural Affiliation

The human remains and associated funerary objects in this notice are connected to one or more identifiable earlier groups, tribes, peoples, or cultures. There is a relationship of shared group identity between the identifiable earlier groups, tribes, peoples, or cultures and one or more Indian Tribes or Native Hawaiian organizations. The following type of information was used to reasonably trace the relationship: geographical.

Determinations

Pursuant to NAGPRA and its implementing regulations, and after consultation with the appropriate Indian Tribes and Native Hawaiian organizations, the Rochester Museum & Science Center has determined that:

- The human remains described in this notice represent the physical remains of 10 individuals of Native American ancestry.
- The 25 objects described in this notice are reasonably believed to have been placed with or near individual human remains at the time of death or later as part of the death rite or ceremony.
- There is a relationship of shared group identity that can be reasonably traced between the human remains and associated funerary objects described in this notice and the Cayuga Nation; Oneida Indian Nation; Oneida Nation; Onondaga Nation; Sac & Fox Nation of Missouri in Kansas and Nebraska; Sac & Fox Nation, Oklahoma; Sac & Fox Tribe of the Mississippi in Iowa; Saint Regis Mohawk Tribe; Seneca Nation of Indians; Seneca-Cayuga Nation; Tonawanda Band of Seneca; and the Tuscarora Nation.

Requests for Repatriation

Written requests for repatriation of the human remains and associated funerary objects in this notice must be sent to the Responsible Official identified in **ADDRESSES**. Requests for repatriation may be submitted by:

1. Any one or more of the Indian Tribes or Native Hawaiian organizations identified in this notice.

2. Any lineal descendant, Indian Tribe, or Native Hawaiian organization not identified in this notice who shows, by a preponderance of the evidence, that the requestor is a lineal descendant or a culturally affiliated Indian Tribe or Native Hawaiian organization.

Repatriation of the human remains and associated funerary objects in this notice to a requestor may occur on or after May 30, 2023. If competing requests for repatriation are received, the Rochester Museum & Science Center must determine the most appropriate requestor prior to repatriation. Requests for joint repatriation of the human remains and associated funerary objects are considered a single request and not competing requests. The Rochester Museum & Science Center is responsible for sending a copy of this notice to the Indian Tribes identified in this notice.

Authority: Native American Graves Protection and Repatriation Act, 25 U.S.C. 3003, and the implementing regulations, 43 CFR 10.9, 10.10, and 10.14.

Dated: April 19, 2023.

Melanie O'Brien,

Manager, National NAGPRA Program.

[FR Doc. 2023–08890 Filed 4–26–23; 8:45 am]

BILLING CODE 4312–52–P

DEPARTMENT OF THE INTERIOR

National Park Service

[NPS–WASO–NAGPRA–NPS0035729; PPWOCRADN0–PCU00RP14.R50000]

Notice of Inventory Completion: Rochester Museum & Science Center, Rochester, NY

AGENCY: National Park Service, Interior.

ACTION: Notice.

SUMMARY: In accordance with the Native American Graves Protection and Repatriation Act (NAGPRA), the Rochester Museum & Science Center (RMSC) has completed an inventory of human remains and has determined that there is a cultural affiliation between the human remains and Indian Tribes or Native Hawaiian organizations in this notice. The human remains were removed from an unknown location in New York.

DATES: Repatriation of the human remains in this notice may occur on or after May 29, 2023.

ADDRESSES: Kathryn Murano Santos, Rochester Museum & Science Center, 657 East Avenue, Rochester, NY 14607, telephone (585) 697–1929, email *kmurano@rmsc.org.*

SUPPLEMENTARY INFORMATION: This notice is published as part of the National Park Service's administrative responsibilities under NAGPRA. The determinations in this notice are the sole responsibility of the Rochester Museum & Science Center. The National Park Service is not responsible for the determinations in this notice. Additional information on the determinations in this notice, including the results of consultation, can be found in the inventory or related records held by the Rochester Museum & Science Center.

Description

Human remains representing, at minimum, three individuals were removed from an unknown location in New York. The human remains of one of these individuals were purchased by the RMSC from A.H. Dewey in 1925. The human remains of a second individual were collected by Harry Schoff, and they were purchased by the RMSC from E.B. Meader and E.K. Meacham in November of 1967. The human remains of a third individual were removed by an unknown individual on an unknown date. No known individuals were identified. No associated funerary objects are present.

Cultural Affiliation

The human remains in this notice are connected to one or more identifiable earlier groups, tribes, peoples, or cultures. There is a relationship of shared group identity between the identifiable earlier groups, tribes, peoples, or cultures and one or more Indian Tribes or Native Hawaiian organizations. The following type of information was used to reasonably trace the relationship: geographical.

Determinations

Pursuant to NAGPRA and its implementing regulations, and after consultation with the appropriate Indian Tribes and Native Hawaiian organizations, the Rochester Museum & Science Center has determined that:

- The human remains described in this notice represent the physical remains of three individuals of Native American ancestry.
- There is a relationship of shared group identity that can be reasonably traced between the human remains described in this notice and the Cayuga Nation; Delaware Nation, Oklahoma; Delaware Tribe of Indians; Mashantucket Pequot Indian Tribe; Mohegan Tribe of Indians of Connecticut; Narragansett Indian Tribe; Oneida Indian Nation; Oneida Nation; Onondaga Nation; Sac & Fox Nation of Missouri in Kansas and Nebraska; Sac & Fox Nation, Oklahoma; Sac & Fox Tribe of the Mississippi in Iowa; Saint Regis Mohawk Tribe; Seneca Nation of Indians; Seneca-Cayuga Nation; Shinnecock Indian Nation; Stockbridge Munsee Community, Wisconsin; Tonawanda Band of Seneca; Tuscarora Nation; and the Wyandotte Nation.

Requests for Repatriation

Written requests for repatriation of the human remains in this notice must be sent to the Responsible Official identified in **ADDRESSES**. Requests for repatriation may be submitted by:

1. Any one or more of the Indian Tribes or Native Hawaiian organizations identified in this notice.
2. Any lineal descendant, Indian Tribe, or Native Hawaiian organization not identified in this notice who shows, by a preponderance of the evidence, that the requestor is a lineal descendant or a culturally affiliated Indian Tribe or Native Hawaiian organization.

Repatriation of the human remains in this notice to a requestor may occur on or after May 29, 2023. If competing requests for repatriation are received, the Rochester Museum & Science Center must determine the most appropriate requestor prior to repatriation. Requests for joint repatriation of the human remains are considered a single request and not competing requests. The Rochester Museum & Science Center is responsible for sending a copy of this notice to the Indian Tribes identified in this notice.

Authority: Native American Graves Protection and Repatriation Act, 25 U.S.C. 3003, and the implementing regulations, 43 CFR 10.9, 10.10, and 10.14.

Dated: April 19, 2023.

Melanie O'Brien,

Manager, National NAGPRA Program.

[FR Doc. 2023–08895 Filed 4–26–23; 8:45 am]

BILLING CODE 4312–52–P

DEPARTMENT OF THE INTERIOR

National Park Service

[NPS–WASO–NAGPRA–NPS0035727; PPWOCRADN0–PCU00RP14.R50000]

Notice of Inventory Completion: Rochester Museum & Science Center, Rochester, NY

AGENCY: National Park Service, Interior.

ACTION: Notice.

SUMMARY: In accordance with the Native American Graves Protection and Repatriation Act (NAGPRA), the Rochester Museum & Science Center (RMSC) has completed an inventory of human remains and associated funerary objects and has determined that there is a cultural affiliation between the human remains and associated funerary objects and Indian Tribes or Native Hawaiian organizations in this notice. The human remains and associated funerary objects were removed from Oswego County, New York, and from an unknown location in western New York.

DATES: Repatriation of the human remains and associated funerary objects in this notice may occur on or after May 29, 2023.

ADDRESSES: Kathryn Murano Santos, Rochester Museum & Science Center, 657 East Avenue, Rochester, NY 14607, telephone (585) 697–1929, email *kmurano@rmsc.org.*

SUPPLEMENTARY INFORMATION: This notice is published as part of the National Park Service's administrative responsibilities under NAGPRA. The determinations in this notice are the sole responsibility of the Rochester Museum & Science Center. The National Park Service is not responsible for the determinations in this notice. Additional information on the determinations in this notice, including the results of consultation, can be found in the inventory or related records held by the Rochester Museum & Science Center.

Description

Human remains representing, at minimum, two individuals were removed from the Candee Farm (Bwv 005) in Oswego County, NY. These human remains were collected by William H. Jennings and George Flansburg, and they were acquired by the RMSC in 1937. No known individuals were identified. The four associated funerary objects are two worked flint tools and two unfinished projectile points.

Human remains representing, at minimum, four individuals were removed from the Luke Site (Bwv 017) in Oswego County, NY. These human remains were collected by Charles Denman, and they were donated to the RMSC in 1947. No known individuals were identified. No associated funerary objects are present.

Human remains representing, at minimum, 11 individuals were removed from the Oberlander 1 Site (Syr 004) in Oswego County, NY. These human remains were acquired during RMSC expeditions conducted from 1937 to 1938. No known individuals were identified. The 20 associated funerary objects are one chert; one lot of faunal bones; one lot of soil refuse; one lot of chert flakes and biface fragments; two lots of chert flakes; one piece of charred material; two pieces of charcoal; one biface; one lot of biface fragments; two pieces of charred wood; three lots of pottery sherds; one pottery sherd; one lot of pottery sherd pieces; one lot of mixed soil and bones; and one chert cache blade.

Human remains representing, at minimum, 19 individuals were removed from the Oberlander 2 Site (Syr 003) in Oswego County, NY. These human remains were excavated during an RMSC expedition conducted in 1938. No known individuals were identified. Of the 223 associated funerary objects, 204 are present in the RMSC collections and 19 are currently missing. The 204 present associated funerary objects are one lot of pipe fragments; one lot of chert flakes; three lots of charred material; one lot of grey ash samples; one lot of charred wood; one lot of charred wood and faunal bone; one lot of charcoal, bone, flint; two lots of native copper awls; one lot of worked wood fragments; one antler tip; one lot of projectile point fragments; one triangular chert scraper/perforator; one side-notched base; six side-notched chert projectile points with missing tip; one side-notched projectile point; one

stemmed chert projectile point with missing tip and side; one side-notched chert projectile point with a broken base; one triangular chert blade; one chert perforator with a missing base; one lot of sherd pieces; two chert and sherd blades; one copper awl; one notched sandstone chopper; one chert knife; five notched chert projectile points; one chert knife base; one sandstone hammerstone; one beaver incisor knife; one broken bone harpoon; three bone awls; one half of a schist gorget; one sandstone anvil stone; five chert perforators; one Plano convex granite gneiss adze; one chert pecking hammer; one sandstone waterworn pebble; two broken chert blades; six chert end scrapers; three chert blade fragments; one stemmed chert projectile point base; one retouched flake chert blade; one lot of chert scrapers and sherds; one lot of native copper awl fragments; two reworked slate gorget fragments; one end scraper; one chert perforator base; one broken chert perforator; one broken chert projectile point; one lot of bone implement; one bone harpoon; one chert perforator with missing tip; one broken side-notched chert projectile point; one whetstone; one broken perforator; one anvil stone; one broken burnt bone implement; one steatite sherd; 12 lots of side-notched chert projectile points; one triangular chert projectile point; one chert projectile point; one chert perforator/scraper; one chert cache blade base; one stemmed chert base; one burnt bone implement; one burnt worked antler fragment; one slate whetstone; one sandstone whetstone; two celts; two pyrites strike-a-lights; two chert flint strikers; six lots of triangular chert scrapers; one chert projectile point with missing base; one burnt bone needle fragment; one burnt antler engraver handle(?); one lot of fragmentary burnt bone awls; two burnt bone awl tip & fragments; two shale gorget fragments; one banded slate bird stone with a broken nose; one semi lozenge projectile point with missing tip; one chert cache blade with missing tip and base; two chert cache blades with missing tip; one sandstone bird stone; one pottery tube fragment; one notched chert projectile point base; three lots of sherds; three slate gorget fragments; one lot of hematite pieces; three lots of cache blades; one side-notched chert projectile point fragment; 31 lots of chert cache blades; three broken chert cache blades; one semi lozenge chert projectile point with missing tip; six chert projectile point tips; one chert blade tip; one schist adze(?) fragment; one chert blade or reject fragment; one burnt bone awl tip; one slate gorget; one schist adze bit fragment; one burnt bone awl fragment; one hammerstone; one slightly notched chert projectile point with missing tip; one stemmed chert scraper or base; one Plano convex schistose material adze; one steatite rim sherd; one schistose material tool fragment; one stemmed chalcedonous chert spearhead; one worked slate; one broken bone implement; one sandstone chopper; and one charred bark and leather. The 19 associated funerary objects currently missing are one notched barbed chert projectile point; three side-notched chert projectile points; one perforator fragment; one broken chert scraper; one triangular chert scraper; three lots of sherds; one worked hematite; one celt; one chert blade tip; one stemmed chalcedonous chert projectile point; one stemmed chert scraper; one chert blade fragment; one chert cache blade; one chert perforator; and one lot of soil. The RMSC continues to look for the missing objects.

Human remains representing, at minimum, one individual were removed from the Wickham Site (Syr 001) in Oswego County, NY. These human remains were collected by W.A. Ritchie during an RMSC expedition conducted in 1945. No known individual was identified. No associated funerary objects are present.

Human remains representing, at minimum, one individual were removed from an unknown location in western New York. These human remains were collected by S.P. Moulthrup on an unknown date. No known individual was identified. No associated funerary objects are present.

Cultural Affiliation

The human remains and associated funerary objects in this notice are connected to one or more identifiable earlier groups, tribes, peoples, or cultures. There is a relationship of shared group identity between the identifiable earlier groups, tribes, peoples, or cultures and one or more Indian Tribes or Native Hawaiian organizations. The following type of information was used to reasonably trace the relationship: geographical.

Determinations

Pursuant to NAGPRA and its implementing regulations, and after consultation with the appropriate Indian Tribes and Native Hawaiian organizations, the Rochester Museum & Science Center has determined that:

- The human remains described in this notice represent the physical remains of 38 individuals of Native American ancestry.
- The 247 objects described in this notice are reasonably believed to have been placed with or near individual human remains at the time of death or later as part of the death rite or ceremony.
- There is a relationship of shared group identity that can be reasonably traced between the human remains and associated funerary objects described in this notice and the Cayuga Nation; Oneida Indian Nation; Oneida Nation; Onondaga Nation; Sac & Fox Nation of Missouri in Kansas and Nebraska; Sac & Fox Nation, Oklahoma; Sac & Fox Tribe of the Mississippi in Iowa; Saint Regis Mohawk Tribe; Seneca Nation of Indians; Seneca-Cayuga Nation; Tonawanda Band of Seneca; Tuscarora Nation; and the Wyandotte Nation.

Requests for Repatriation

Written requests for repatriation of the human remains and associated funerary objects in this notice must be sent to the Responsible Official identified in **ADDRESSES**. Requests for repatriation may be submitted by:

1. Any one or more of the Indian Tribes or Native Hawaiian organizations identified in this notice.

2. Any lineal descendant, Indian Tribe, or Native Hawaiian organization not identified in this notice who shows, by a preponderance of the evidence, that the requestor is a lineal descendant or a culturally affiliated Indian Tribe or Native Hawaiian organization.

Repatriation of the human remains and associated funerary objects in this notice to a requestor may occur on or after May 29, 2023. If competing requests for repatriation are received, the Rochester Museum & Science Center must determine the most appropriate requestor prior to repatriation. Requests for joint repatriation of the human remains and associated funerary objects are considered a single request and not competing requests. The Rochester Museum & Science Center is responsible for sending a copy of this notice to the Indian Tribes identified in this notice.

Authority: Native American Graves Protection and Repatriation Act, 25 U.S.C. 3003, and the implementing regulations, 43 CFR 10.9, § 10.10, and § 10.14.

Dated: April 19, 2023.

Melanie O'Brien,

Manager, National NAGPRA Program.

[FR Doc. 2023–08893 Filed 4–26–23; 8:45 am]

BILLING CODE 4312–52–P

INTERNATIONAL TRADE COMMISSION

[USITC SE–23–021]

Sunshine Act Meetings

AGENCY HOLDING THE MEETING: United States International Trade Commission.

TIME AND DATE: May 4, 2023 at 11:00 a.m.

PLACE: Room 101, 500 E Street SW, Washington, DC 20436, Telephone: (202) 205–2000.

STATUS: Open to the public.

MATTERS TO BE CONSIDERED:

1. Agendas for future meetings: none.
2. Minutes.
3. Ratification List.
4. Commission vote on Inv. No. 731–TA–683 (Fifth Review)(Fresh Garlic from China). The Commission currently is scheduled to complete and file its determinations and views of the Commission on May 12, 2023.
5. Outstanding action jackets: none.

CONTACT PERSON FOR MORE INFORMATION: Sharon Bellamy, Acting Hearings and Information Officer, 202–205–2000.

The Commission is holding the meeting under the Government in the Sunshine Act, 5 U.S.C. 552(b). In accordance with Commission policy, subject matter listed above, not disposed of at the scheduled meeting, may be carried over to the agenda of the following meeting.

By order of the Commission.

Issued: April 25, 2023.

Lisa Barton,

Secretary to the Commission.

[FR Doc. 2023–09074 Filed 4–25–23; 4:15 pm]

BILLING CODE 7020–02–P

JUDICIAL CONFERENCE OF THE UNITED STATES

Committee on Rules of Practice and Procedure; Meeting of the Judicial Conference

AGENCY: Judicial Conference of the United States.

ACTION: Committee on Rules of Practice and Procedure; notice of open meeting.

SUMMARY: The Committee on Rules of Practice and Procedure will hold a meeting in a hybrid format with remote attendance options on June 6, 2023 in Washington, DC. The meeting is open to the public for observation but not participation. An agenda and supporting materials will be posted at least 7 days in advance of the meeting at: *https://www.uscourts.gov/rules-policies/records-and-archives-rules-committees/agenda-books.*

DATES: June 6, 2023.

FOR FURTHER INFORMATION CONTACT: H. Thomas Byron III, Esq., Chief Counsel, Rules Committee Staff, Administrative Office of the U.S. Courts, Thurgood Marshall Federal Judiciary Building, One Columbus Circle NE, Suite 7–300, Washington, DC 20544, Phone (202) 502–1820, *RulesCommittee_Secretary@ao.uscourts.gov.*

(Authority: 28 U.S.C. 2073.)

Dated: April 24, 2023.

Shelly L. Cox,

Management Analyst, Rules Committee Staff.

[FR Doc. 2023–08943 Filed 4–26–23; 8:45 am]

BILLING CODE 2210–55–P

DEPARTMENT OF JUSTICE

Drug Enforcement Administration

[Docket No. 1187]

Bulk Manufacturer of Controlled Substances Application: Bulk Manufacturer of Marihuana: Royal Dynastic Organics

AGENCY: Drug Enforcement Administration, Justice.

ACTION: Notice of application.

SUMMARY: The Drug Enforcement Administration (DEA) is providing notice of an application it has received from an entity applying to be registered to manufacture in bulk basic class(es) of controlled substances listed in schedule I. DEA intends to evaluate this and other pending applications according to its regulations governing the program of growing marihuana for scientific and medical research under DEA registration.

DATES: Registered bulk manufacturers of the affected basic class(es), and applicants therefore, may submit electronic comments on or objections to the issuance of the proposed registration on or before June 26, 2023.

ADDRESSES: DEA requires that all comments be submitted electronically through the Federal eRulemaking Portal, which provides the ability to type short comments directly into the comment field on the web page or attach a file for lengthier comments. Please go to *https://www.regulations.gov* and follow the online instructions at that site for submitting comments. Upon submission of your comment, you will receive a Comment Tracking Number. Please be aware that submitted comments are not instantaneously available for public view on *https://www.regulations.gov.* If you have received a Comment Tracking Number, your comment has been successfully submitted and there is no need to resubmit the same comment.''

SUPPLEMENTARY INFORMATION: The Controlled Substances Act (CSA) prohibits the cultivation and distribution of marihuana except by persons who are registered under the CSA to do so for lawful purposes. In accordance with the purposes specified in 21 CFR 1301.33(a), DEA is providing notice that the entity identified below has applied for registration as a bulk manufacturer of schedule I controlled substances. In response, registered bulk manufacturers of the affected basic class(es), and applicants therefor, may submit electronic comments on or objections of the requested registration, as provided in this notice. This notice does not constitute any evaluation or determination of the merits of the application submitted.

The applicant plans to manufacture bulk active pharmaceutical ingredients (APIs) for product development and distribution to DEA registered researchers. If the application for registration is granted, the registrant would not be authorized to conduct other activity under this registration aside from those coincident activities specifically authorized by DEA regulations. DEA will evaluate the application for registration as a bulk manufacturer for compliance with all applicable laws, treaties, and regulations and to ensure adequate safeguards against diversion are in place.

As this applicant has applied to become registered as a bulk manufacturer of marihuana, the application will be evaluated under the criteria of 21 U.S.C. 823(a). DEA will conduct this evaluation in the manner described in the rule published at 85 FR 82333 on December 18, 2020, and reflected in DEA regulations at 21 CFR part 1318.

In accordance with 21 CFR 1301.33(a), DEA is providing notice that on March 8, 2023, Royal Dynastic Organics, 865 Hogbin Road, Millville, New Jersey 08332–7608, applied to be registered as a bulk manufacturer of the following basic class(es) of controlled substances:

Controlled substance	Drug code	Schedule
Marihuana Extract	7350	I
Marihuana	7360	I
Tetrahydrocannabinols	7370	I

Matthew Strait,

Deputy Assistant Administrator.

[FR Doc. 2023–08856 Filed 4–26–23; 8:45 am]

BILLING CODE P

DEPARTMENT OF JUSTICE

Drug Enforcement Administration

[Docket No. DEA–1183]

Importer of Controlled Substances Application: Research Triangle Institute

AGENCY: Drug Enforcement Administration, Justice.

ACTION: Notice of application.

SUMMARY: Research Triangle Institute has applied to be registered as an importer of basic class(es) of controlled substance(s). Refer to **SUPPLEMENTARY INFORMATION** listed below for further drug information.

DATES: Registered bulk manufacturers of the affected basic class(es), and applicants therefore, may submit electronic comments on or objections to the issuance of the proposed registration on or before May 30, 2023. Such persons may also file a written request for a hearing on the application on or before May 30, 2023.

ADDRESSES: The Drug Enforcement Administration requires that all comments be submitted electronically through the Federal eRulemaking Portal, which provides the ability to type short comments directly into the comment field on the web page or attach a file for lengthier comments. Please go to *https://www.regulations.gov* and follow the online instructions at that site for submitting comments. Upon submission of your comment, you will receive a Comment Tracking Number. Please be aware that submitted comments are not instantaneously available for public view on *https://www.regulations.gov.* If you have received a Comment Tracking Number, your comment has been successfully submitted and there is no need to resubmit the same comment. All requests for a hearing must be sent to: (1) Drug Enforcement Administration, Attn: Hearing Clerk/OALJ, 8701 Morrissette Drive, Springfield, Virginia 22152; and (2) Drug Enforcement Administration, Attn: DEA Federal Register Representative/DPW, 8701 Morrissette Drive, Springfield, Virginia 22152. All requests for a hearing should also be sent to: Drug Enforcement Administration, Attn: Administrator, 8701 Morrissette Drive, Springfield, Virginia 22152.

SUPPLEMENTARY INFORMATION: In accordance with 21 CFR 1301.34(a), this is notice that on March 14, 2023, Research Triangle Institute, 3040 East Cornwallis Road, Hermann Building, Room 106, Research Triangle Park, North Carolina 27709–0000, applied to be registered as an importer of the following basic class(es) of controlled substance(s):

Controlled substance	Drug code	Schedule
Amineptine (7-[(10,11-dihydro-5H-dibenzo[a,d]cyclohepten-5-yl)amino]heptanoic acid)	1219	I
Mesocarb (N-phenyl-N′-(3-(1-phenylpropan-2-yl)-1,2,3-oxadiazol-3-ium-5-yl)carbamimidate)	1227	I
Methiopropamine (N-methyl-1-(thiophen-2-yl)propan-2-amine)	1478	I
3-Fluoro-N-methylcathinone (3-FMC)	1233	I
Cathinone	1235	I
Methcathinone	1237	I
4-Fluoro-N-methylcathinone (4-FMC)	1238	I
Para-Methoxymethamphetamine (PMMA), 1-(4-1245IN methoxyphenyl)-N-methylpropan-2-amine	1245	I
Pentedrone (α-methylaminovalerophenone)	1246	I
Mephedrone (4-Methyl-N-methylcathinone)	1248	I
4-Methyl-N-ethylcathinone (4-MEC)	1249	I
Naphyrone	1258	I
N-Ethylamphetamine	1475	I
N,N-Dimethylamphetamine	1480	I
Fenethylline	1503	I
Aminorex	1585	I
4-Methylaminorex (cis isomer)	1590	I
4,4′-Dimethylaminorex (4,4′-DMAR; 4,5-dihydro-4-1595 I N methyl-5-(4-methylphenyl)-2-oxazolamine; 4-methyl-5-(4-methylphenyl)-4,5-dihydro-1,3-oxazol-2-amine).	1595	I
Gamma Hydroxybutyric Acid	2010	I
Methaqualone	2565	I
Mecloqualone	2572	I
JWH-250 (1-Pentyl-3-(2-methoxyphenylacetyl) indole)	6250	I
SR-18 (Also known as RCS-8) (1-Cyclohexylethyl-3-(2-methoxyphenylacetyl) indole)	7008	I
ADB-FUBINACA (N-(1-amino-3,3-dimethyl-1-oxobutan-2-yl)-1-(4-fluorobenzyl)-1H-indazole-3-carboxamide)	7010	I
5-Fluoro-UR-144 and XLR11 [1-(5-Fluoro-pentyl)1H-indol-3-yl](2,2,3,3-tetramethylcyclopropyl)methanone	7011	I
AB-FUBINACA (N-(1-amino-3-methyl-1-oxobutan-2-yl)-1-(4-fluorobenzyl)-1H-indazole-3-carboxamide)	7012	I
FUB-144 (1-(4-fluorobenzyl)-1H-indol-3-yl)(2,2,3,3-tetramethylcyclopropyl)methanone)	7014	I
JWH-019 (1-Hexyl-3-(1-naphthoyl)indole)	7019	I
MDMB-FUBINACA (Methyl 2-(1-(4-fluorobenzyl)-1H-indazole-3-carboxamido)-3,3-dimethylbutanoate)	7020	I
FUB-AMB, MMB-FUBINACA, AMB-FUBINACA (2-(1-(4-fluorobenzyl)-1Hindazole-3-carboxamido)-3-methylbutanoate)	7021	I
AB-PINACA (N-(1-amino-3-methyl-1-oxobutan-2-yl)-1-pentyl-1H-indazole-3-carboxamide)	7023	I
THJ-2201 ([1-(5-fluoropentyl)-1H-indazol-3-yl](naphthalen-1-yl)methanone)	7024	I
5F-AB-PINACA (N-(1-amino-3-methyl-1-oxobutan-2-yl)-1-(5-fluropentyl)-1H-indazole-3-carboximide)	7025	I
AB-CHMINACA (N-(1-amino-3-methyl-1-oxobutan-2-yl)-1-(cyclohexylmethyl)-1H-indazole-3-carboxamide)	7031	I
MAB-CHMINACA (N-(1-amino-3,3dimethyl-1-oxobutan-2-yl)-1-(cyclohexylmethyl)-1H-indazole-3-carboxamide)	7032	I

Controlled substance	Drug code	Schedule
5F-AMB (Methyl 2-(1-(5-fluoropentyl)-1H-indazole-3-carboxamido)-3-methylbutanoate)	7033	I
5F-ADB, 5F-MDMB-PINACA (Methyl 2-(1-(5-fluoropentyl)-1H-indazole-3-carboxamido)-3,3-dimethylbutanoate)	7034	I
ADB-PINACA (N-(1-amino-3,3-dimethyl-1-oxobutan-2-yl)-1-pentyl-1H-indazole-3-carboxamide)	7035	I
5F-EDMB-PINACA (ethyl 2-(1-(5-fluoropentyl)-1H-indazole-3-carboxamido)-3,3-dimethylbutanoate)	7036	I
5F-MDMB-PICA (methyl 2-(1-(5-fluoropentyl)-1H-indole-3-carboxamido)-3,3-dimethylbutanoate)	7041	I
MDMB-CHMICA, MMB-CHMINACA (Methyl 2-(1-(cyclohexylmethyl)-1H-indole-3-carboxamido)-3,3-dimethylbutanoate)	7042	I
4F-MDMB-BINACA (4F-MDMB-BUTINACA or methyl 2-(1-(4-fluorobutyl)-1H-indazole-3-carboxamido)-3,3-dimethylbutanoate) 7043 I N.	7043	I
MMB-CHMICA, AMB-CHMICA (methyl 2-(1-(cyclohexylmethyl)-1H-indole-3-carboxamido)-3-methylbutanoate)	7044	I
FUB-AKB48, FUB-APINACA, AKB48 N-(4-FLUOROBENZYL) (N-(adamantan-1-yl)-1-(4-fluorobenzyl)-1H-indazole-3-carboximide).	7047	I
APINACA and AKB48 (N-(1-Adamantyl)-1-pentyl-1H-indazole-3-carboxamide)	7048	I
5F-APINACA, 5F-AKB48 (N-(adamantan-1-yl)-1-(5-fluoropentyl)-1H-indazole-3-carboxamide)	7049	I
JWH-081 (1-Pentyl-3-(1-(4-methoxynaphthoyl) indole)	7081	I
5F-CUMYL-PINACA, 5GT-25 (1-(5-fluoropentyl)-N-(2-phenylpropan-2-yl)-1H-indazole-3-carboxamide)	7083	I
5F-CUMYL-P7AICA (1-(5-fluoropentyl)-N-(2-phenylpropan-2-yl)-1H-pyrrolo[2,3-b]pyridine-3-carboxamide)	7085	I
4-CN-CUML-BUTINACA, 4-cyano-CUMYL-BUTINACA, 4-CN-CUMYL BINACA, CUMYL-4CN-BINACA, SGT-78 (1-(4-cyanobutyl)-N-(2-phenylpropan-2-yl)-1H-indazole-3-carboxamide).	7089	I
SR-19 (Also known as RCS-4) (1-Pentyl-3-[(4-methoxy)-benzoyl] indole)	7104	I
JWH-018 (also known as AM678) (1-Pentyl-3-(1-naphthoyl)indole)	7118	I
JWH-122 (1-Pentyl-3-(4-methyl-1-naphthoyl) indole)	7122	I
UR-144 (1-Pentyl-1H-indol-3-yl)(2,2,3,3-tetramethylcyclopropyl)methanone	7144	I
JWH-073 (1-Butyl-3-(1-naphthoyl)indole)	7173	I
JWH-200 (1-[2-(4-Morpholinyl)ethyl]-3-(1-naphthoyl)indole)	7200	I
AM2201 (1-(5-Fluoropentyl)-3-(1-naphthoyl) indole)	7201	I
JWH-203 (1-Pentyl-3-(2-chlorophenylacetyl) indole)	7203	I
NM2201, CBL2201 (Naphthalen-1-yl 1-(5-fluoropentyl)-1H-indole-3-carboxylate	7221	I
PB-22 (Quinolin-8-yl 1-pentyl-1H-indole-3-carboxylate)	7222	I
5F-PB-22 (Quinolin-8-yl 1-(5-fluoropentyl)-1H-indole-3-carboxylate)	7225	I
4-methyl-alpha-ethylaminopentiophenone (4-MEAP) 7245 I N 4-MEAP	7245	I
N-ethylhexedrone 7246 I N	7246	I
Alpha-ethyltryptamine	7249	I
Ibogaine	7260	I
2-(ethylamino)-2-(3-methoxyphenyl)cyclohexan-1-one methoxetamine (methoxetamine)	7286	I
CP-47,497 (5-(1,1-Dimethylheptyl)-2-[(1R,3S)-3-hydroxycyclohexyl-phenol)	7297	I
CP-47,497 C8 Homologue (5-(1,1-Dimethyloctyl)-2-[(1R,3S)3-hydroxycyclohexyl-phenol)	7298	I
Lysergic acid diethylamide	7315	I
2C-T-7 (2,5-Dimethoxy-4-(n)-propylthiophenethylamine	7348	I
Marihuana Extract	7350	I
Parahexyl	7374	I
Mescaline	7381	I
2C-T-2 (2-(4-Ethylthio-2,5-dimethoxyphenyl) ethanamine)	7385	I
3,4,5-Trimethoxyamphetamine	7390	I
4-Bromo-2,5-dimethoxyamphetamine	7391	I
4-Bromo-2,5-dimethoxyphenethylamine	7392	I
4-Methyl-2,5-dimethoxyamphetamine	7395	I
2,5-Dimethoxyamphetamine	7396	I
JWH-398 (1-Pentyl-3-(4-chloro-1-naphthoyl) indole)	7398	I
2,5-Dimethoxy-4-ethylamphetamine	7399	I
3,4-Methylenedioxyamphetamine	7400	I
5-Methoxy-3,4-methylenedioxyamphetamine	7401	I
N-Hydroxy-3,4-methylenedioxyamphetamine	7402	I
3,4-Methylenedioxy-N-ethylamphetamine	7404	I
3,4-Methylenedioxymethamphetamine	7405	I
4-Methoxyamphetamine	7411	I
Peyote	7415	I
5-Methoxy-N-N-dimethyltryptamine	7431	I
Alpha-methyltryptamine	7432	I
Bufotenine	7433	I
Diethyltryptamine	7434	I
Dimethyltryptamine	7435	I
Psilocybin	7437	I
Psilocyn	7438	I
5-Methoxy-N,N-diisopropyltryptamine	7439	I
4-chloro-alpha-pyrrolidinovalerophenone (4-chloro-aPV	7443	I
4′-methyl-alpha-pyrrolidinohexiophenone (MPHP	7446	I
N-Ethyl-1-phenylcyclohexylamine	7455	I
1-(1-Phenylcyclohexyl)pyrrolidine	7458	I
1-[1-(2-Thienyl)cyclohexyl]piperidine	7470	I
1-[1-(2-Thienyl)cyclohexyl]pyrrolidine	7473	I
N-Ethyl-3-piperidyl benzilate	7482	I
N-Methyl-3-piperidyl benzilate	7484	I
N-Benzylpiperazine	7493	I
4-MePPP (4-Methyl-alphapyrrolidinopropiophenone)	7498	I

Controlled substance	Drug code	Schedule
2C-D (2-(2,5-Dimethoxy-4-methylphenyl) ethanamine)	7508	I
2C-E (2-(2,5-Dimethoxy-4-ethylphenyl) ethanamine)	7509	I
2C-H 2-(2,5-Dimethoxyphenyl) ethanamine)	7517	I
2C-I 2-(4-iodo-2,5-dimethoxyphenyl) ethanamine)	7518	I
2C-C 2-(4-Chloro-2,5-dimethoxyphenyl) ethanamine)	7519	I
2C-N (2-(2,5-Dimethoxy-4-nitro-phenyl) ethanamine)	7521	I
2C-P (2-(2,5-Dimethoxy-4-(n)-propylphenyl) ethanamine)	7524	I
2C-T-4 (2-(4-Isopropylthio)-2,5-dimethoxyphenyl) ethanamine)	7532	I
MDPV (3,4-Methylenedioxypyrovalerone)	7535	I
25B-NBOMe (2-(4-bromo-2,5-dimethoxyphenyl)-N-(2-methoxybenzyl) ethanamine)	7536	I
25C-NBOMe (2-(4-chloro-2,5-dimethoxyphenyl)-N-(2-methoxybenzyl) ethanamine)	7537	I
25I-NBOMe (2-(4-iodo-2,5-dimethoxyphenyl)-N-(2-methoxybenzyl) ethanamine)	7538	I
Methylone (3,4-Methylenedioxy-N-methylcathinone)	7540	I
Butylone	7541	I
Pentylone	7542	I
N-Ethypentylone, ephylone (1-(1,3-benzodioxol-5-yl)-2-(ethylamino)-pentan-1-one)	7543	I
alpha-pyrrolidinohexanophenone (a-PHP)	7544	I
alpha-pyrrolidinopentiophenone (α-PVP)	7545	I
alpha-pyrrolidinobutiophenone (α-PBP)	7546	I
Ethylone	7547	1
alpha-pyrrolidinoheptaphenone (PV8)	7548	1
AM-694 (1-(5-Fluoropentyl)-3-(2-iodobenzoyl) indole)	7694	I
Acetyldihydrocodeine	9051	I
Benzylmorphine	9052	I
Codeine-N-oxide	9053	I
Cyprenorphine	9054	I
Desomorphine	9055	I
Etorphine (except HCl)	9056	I
Codeine methylbromide	9070	I
Brorphine (1-(1-(1-(4-bromophenyl)ethyl)piperidin-4-4l)1,3-dihydro-2H-benzo[d]imidazol-2-one)	9098	I
Dihydromorphine	9145	I
Difenoxin	9168	I
Heroin	9200	I
Hydromorphinol	9301	I
Methyldesorphine	9302	I
Methyldihydromorphine	9304	I
Morphine methylbromide	9305	I
Morphine methylsulfonate	9306	I
Morphine-N-oxide	9307	I
Myrophine	9308	I
Nicocodeine	9309	I
Nicomorphine	9312	I
Normorphine	9313	I
Pholcodine	9314	I
Thebacon	9315	I
Acetorphine	9319	I
Drotebanol	9335	I
U-47700 (3,4-dichloro-N-[2-(dimethylamino)cyclohexyl]-N-methylbenzamide)	9547	I
AH-7921 (3,4-dichloro-N-[(1-dimethylamino)cyclohexylmethyl]benzamide))	9551	I
MT-45 (1-cyclohexyl-4-(1,2-diphenylethyl)piperazine))	9560	I
Acetylmethadol	9601	I
Allylprodine	9602	I
Alphacetylmethadol except levo-alphacetylmethadol	9603	I
Alphameprodine	9604	I
Alphamethadol	9605	I
Benzethidine	9606	I
Betacetylmethadol	9607	I
Betameprodine	9608	I
Betamethadol	9609	I
Betaprodine	9611	I
Clonitazene	9612	I
Dextromoramide	9613	I
Isotonotazene (N,N-diethyl-2-(2-(4 isopropoxybenzyl)-5-nitro-1H-benzimidazol-1-yl)ethan-1-amine)	9614	I
Diampromide	9615	I
Diethylthiambutene	9616	I
Dimenoxadol	9617	I
Dimepheptanol	9618	I
Dimethylthiambutene	9619	I
Dioxaphetyl butyrate	9621	I
Dipipanone	9622	I
Ethylmethylthiambutene	9623	I
Etonitazene	9624	I
Etoxeridine	9625	I
Furethidine	9626	I

Controlled substance	Drug code	Schedule
Hydroxypethidine	9627	I
Ketobemidone	9628	I
Levomoramide	9629	I
Levophenacylmorphan	9631	I
Morpheridine	9632	I
Noracymethadol	9633	I
Norlevorphanol	9634	I
Normethadone	9635	I
Norpipanone	9636	I
Phenadoxone	9637	I
Phenampromide	9638	I
Phenoperidine	9641	I
Piritramide	9642	I
Proheptazine	9643	I
Properidine	9644	I
Racemoramide	9645	I
Trimeperidine	9646	I
Phenomorphan	9647	I
Propiram	9649	I
1-Methyl-4-phenyl-4-propionoxypiperidine	9661	I
1-(2-Phenylethyl)-4-phenyl-4-acetoxypiperidine	9663	I
Tilidine	9750	I
Butonitazene (2-(2-(4-butoxybenzyl)-5-nitro-1H-benzimidazol-1-yl)-N,N-diethylethan-1-amine)	9751	I
fluorobenzyl)-5-nitro1H-benzimidazol-1-yl)ethan-1-amine)	9756	I
Metonitazene (N,N-diethyl-2-(2-(4-methoxybenzyl)-5-nitro-1H-benzimidazol-1-yl)ethan-1-amine)	9757	I
N-pyrrolidino etonitazene; etonitazepyne (2-(4-ethoxybenzyl)-5-nitro-1-(2-(pyrrolidin-1-yl)ethyl)-1H-benzimidazole)	9758	I
Protonitazene (N,N-diethyl-2-(5-nitro-2-(4-propoxybenzyl)-1H-benzimidazol-1-yl)ethan-1-amine)	9759	I
Metodesnitazene (N,N-diethyl-2-(2-(4-methoxybenzyl)-1H-benzimidazol-1-yl)ethan-1-amine)	9764	I
Etodesnitazene; etazene (2-(2-(4-ethoxybenzyl)-1H-benzimidazol-1-yl)-N,N-diethylethan-1-amine)	9765	I
Acryl fentanyl (N-(1-phenethylpiperidin-4-yl)-N-phenylacrylamide)	9811	I
Para-Fluorofentanyl	9812	I
3-Methylfentanyl	9813	I
Alpha-methylfentanyl	9814	I
Acetyl-alpha-methylfentanyl	9815	I
N-(2-fluorophenyl)-N-(1-phenethylpiperidin-4-yl)propionamide	9816	I
Para-Methylfentanyl (N-(4-methylphenyl)-N-(1-phenethylpiperidin-4-yl)propionamide; also known as 4-methylfentanyl)	9817	I
4′-Methyl acetyl fentanyl (N-(1-(4-methylphenethyl)piperidin-4-yl)-N-phenylacetamide)	9819	I
ortho-Methyl methoxyacetyl fentanyl (2-methoxy-N-(2-methylphenyl)-N-(1-phenethylpiperidin-4-yl)acetamide)	9820	I
Acetyl Fentanyl (N-(1-phenethylpiperidin-4-yl)-N-phenylacetamide)	9821	I
Butyryl Fentanyl	9822	I
Para-fluorobutyryl fentanyl	9823	I
4-Fluoroisobutyryl fentanyl (N-(4-fluorophenyl)-N-(1-phenethylpiperidin-4-yl)isobutyramide)	9824	I
2-methoxy-N-(1-phenethylpiperidin-4-yl)-N-phenylacetamide	9825	I
Para-chloroisobutyryl fentanyl	9826	I
Isobutyryl fentanyl	9827	I
Beta-hydroxyfentanyl	9830	I
Beta-hydroxy-3-methylfentanyl	9831	I
Alpha-methylthiofentanyl	9832	I
3-Methylthiofentanyl	9833	I
Furanyl fentanyl (N-(1-phenethylpiperidin-4-yl)-N-phenylfuran-2-carboxamide)	9834	I
Thiofentanyl	9835	I
Beta-hydroxythiofentanyl	9836	I
Para-methoxybutyryl fentanyl	9837	!
Ocfentanil	9838	I
Thiofuranyl fentanyl (N-(1-phenethylpiperidin-4-yl)-Nphenylthiophene-2-carboxamide; also known as 2-thiofuranyl fentanyl; thiophene fentanyl).	9839	I
Valeryl fentanyl	9840	I
Phenyl fentanyl (N-(1-phenethylpiperidin-4-yl)-Nphenylbenzamide; also known as benzoyl fentanyl)	9841	I
beta′-Phenyl fentanyl (N-(1-phenethylpiperidin-4-yl)-N,3-diphenylpropanamide; also known as β′-phenyl fentanyl; 3-phenylpropanoyl fentanyl).	9842	I
N-(1-phenethylpiperidin-4-yl)-N-phenyltetrahydrofuran-2-carboxamide	9843	I
Crotonyl fentanyl ((E-N-(1-phenethylpiperidin-4-yl)-N-phenylbut-2-enamide)	9844	I
Cyclopropyl Fentanyl	9845	I
ortho-Fluorobutyryl fentanyl (N-(2-fluorophenyl)-N-(1-phenethylpiperidin-4-yl)butyramide; also known as 2-fluorobutyryl fentanyl).	9846	I
Cyclopentyl fentanyl	9847	I
ortho-Methyl acetylfentanyl (N-(2-methylphenyl)-N-(1-phenethylpiperidin-4-yl)acetamide; also known as 2-methyl acetylfentanyl).	9848	I
Fentanyl related-compounds as defined in 21 CFR 1308.11(h)	9850	I
Fentanyl carbamate (ethyl (1-phenethylpiperidin-4-yl)(phenyl)carbamate)	9851	I
ortho-Fluoroacryl fentanyl (N-(2-fluorophenyl)-N-(1-phenethylpiperidin-4-yl)acrylamide)	9852	I
ortho-Fluoroisobutyryl fentanyl (N-(2-fluorophenyl)-N-(1-phenethylpiperidin-4-yl)isobutyramide)	9853	I
Para-Fluoro furanyl fentanyl (N-(4-fluorophenyl)-N-(1-phenethylpiperidin-4-yl)furan-2-carboxamide)	9854	I
2′-Fluoro ortho-fluorofentanyl (N-(1-(2-fluorophenethyl)piperidin-4-yl)-N-(2-fluorophenyl)propionamide; also known as 2′-fluoro 2-fluorofentanyl).	9855	I

Controlled substance	Drug code	Schedule
beta-Methyl fentanyl (N-phenyl-N-(1-(2-phenylpropyl)piperidin-4-yl)propionamide; also known as β-methyl fentanyl)	9856	I
Zipeprol (1-methoxy-3[-4-(2-methoxy-2-phenylethyl)piperazin-1-yl]-1-phenylpropan-2-ol)	9873	I
Phenmetrazine	1631	II
Methylphenidate	1724	II
Amobarbital	2125	II
Pentobarbital	2270	II
Secobarbital	2315	II
Glutethimide	2550	II
Dronabinol in an oral solution in a drug product approved for marketing by the U.S. Food and Drug Administration	7365	II
Nabilone	7379	II
1-Phenylcyclohexylamine	7460	II
Phencyclidine	7471	II
ANPP (4-Anilino-N-phenethyl-4-piperidine)	8333	II
Norfentanyl (N-phenyl-N-(piperidin-4-yl) propionamide)	8366	II
Phenylacetone	8501	II
1-Piperidinocyclohexanecarbonitrile	8603	II
Alphaprodine	9010	II
Anileridine	9020	II
Coca Leaves	9040	II
Cocaine	9041	II
Etorphine HCl	9059	II
Dihydrocodeine	9120	II
Diphenoxylate	9170	II
Ecgonine	9180	II
Ethylmorphine	9190	II
Levomethorphan	9210	II
Levorphanol	9220	II
Isomethadone	9226	II
Meperidine	9230	II
Meperidine intermediate-A	9232	II
Meperidine intermediate-B	9233	II
Meperidine intermediate-C	9234	II
Metazocine	9240	II
Oliceridine (N-[(3-methoxythiophen-2yl)methyl] ({2-[9r)-9-(pyridin-2-yl)-6-oxaspiro[4.5] decan-9-yl] ethyl {time})amine fumarate).	9245	II
Metopon	9260	II
Dextropropoxyphene, bulk (non-dosage forms)	9273	II
Dihydroetorphine	9334	II
Opium tincture	9630	II
Opium, powdered	9639	II
Opium, granulated	9640	II
Noroxymorphone	9668	II
Phenazocine	9715	II
Thiafentanil	9729	II
Piminodine	9730	II
Racemethorphan	9732	II
Racemorphan	9733	II
Alfentanil	9737	II
Remifentanil	9739	II
Sufentanil	9740	II
Carfentanil	9743	II
Tapentadol	9780	II
Bezitramide	9800	II
Moramide-intermediate	9802	II

The company plans to import small quantities of the listed controlled substances for the National Institute on Drug Abuse for research activities. The company plans to import analytical reference standards for distribution to its customers for research and analytical purposes. No other activity for this drug code is authorized for this registration.

Approval of permit applications will occur only when the registrant's business activity is consistent with what is authorized under 21 U.S.C. 952(a)(2). Authorization will not extend to the import of Food and Drug Administration-approved or non-approved finished dosage forms for commercial sale.

Matthew Strait,

Deputy Assistant Administrator.

[FR Doc. 2023–08857 Filed 4–26–23; 8:45 am]

BILLING CODE 4410–09–P

DEPARTMENT OF JUSTICE

Drug Enforcement Administration

[Docket No. DEA–1186]

Bulk Manufacturer of Controlled Substances Application: Pisgah Laboratories Inc.

AGENCY: Drug Enforcement Administration, Justice.

ACTION: Notice of application.

SUMMARY: Pisgah Laboratories Inc., has applied to be registered as a bulk

manufacturer of basic class(es) of controlled substance(s). Refer to **SUPPLEMENTARY INFORMATION** listed below for further drug information.

DATES: Registered bulk manufacturers of the affected basic class(es), and applicants therefore, may submit electronic comments on or objections to the issuance of the proposed registration on or before June 26, 2023. Such persons may also file a written request for a hearing on the application on or before June 26, 2023.

ADDRESSES: The Drug Enforcement Administration requires that all comments be submitted electronically through the Federal eRulemaking Portal, which provides the ability to type short comments directly into the comment field on the web page or attach a file for lengthier comments. Please go to *https://www.regulations.gov* and follow the online instructions at that site for submitting comments. Upon submission of your comment, you will receive a Comment Tracking Number. Please be aware that submitted comments are not instantaneously available for public view on *https://www.regulations.gov.* If you have received a Comment Tracking Number, your comment has been successfully submitted and there is no need to resubmit the same comment.

SUPPLEMENTARY INFORMATION: In accordance with 21 CFR 1301.33(a), this is notice that on March 13, 2023, Pisgah Laboratories Inc., 3222 Old Hendersonville Highway, Pisgah Forest, North Carolina 28768, applied to be registered as a bulk manufacturer of the following basic class(es) of controlled substance(s):

Controlled substance	Drug code	Schedule
4-Bromo-2,5-dimethoxyphenethylamine	7392	I
Methylone (3,4-Methylenedioxy-N-methylcathinone)	7540	I
Difenoxin	9168	I
Amphetamine	1100	II
Lisdexamfetamine	1205	II
Methylphenidate	1724	II
Diphenoxylate	9170	II
Meperidine	9230	II
Methadone	9250	II

The company plans to bulk manufacture the above-listed controlled substances in bulk for internal research purposes and distribution to its customers. No other activities for these drug codes are authorized for this registration.

Matthew Strait,

Deputy Assistant Administrator.

[FR Doc. 2023–08859 Filed 4–26–23; 8:45 am]

BILLING CODE 4410–09–P

DEPARTMENT OF JUSTICE

Drug Enforcement Administration

[Docket No. DEA–1182]

Importer of Controlled Substances Application: AndersonBrecon, Inc.

AGENCY: Drug Enforcement Administration, Justice.

ACTION: Notice of application.

SUMMARY: AndersonBrecon, Inc. has applied to be registered as an importer of basic class(es) of controlled substance(s). Refer to **SUPPLEMENTARY INFORMATION** listed below for further drug information.

DATES: Registered bulk manufacturers of the affected basic class(es), and applicants therefore, may submit electronic comments on or objections to the issuance of the proposed registration on or before May 30, 2023. Such persons may also file a written request for a hearing on the application on or before May 30, 2023.

ADDRESSES: The Drug Enforcement Administration requires that all comments be submitted electronically through the Federal eRulemaking Portal, which provides the ability to type short comments directly into the comment field on the web page or attach a file for lengthier comments. Please go to *https://www.regulations.gov* and follow the online instructions at that site for submitting comments. Upon submission of your comment, you will receive a Comment Tracking Number. Please be aware that submitted comments are not instantaneously available for public view on *https://www.regulations.gov.* If you have received a Comment Tracking Number, your comment has been successfully submitted and there is no need to resubmit the same comment. All requests for a hearing must be sent to: (1) Drug Enforcement Administration, Attn: Hearing Clerk/OALJ, 8701 Morrissette Drive, Springfield, Virginia 22152; and (2) Drug Enforcement Administration, Attn: DEA Federal Register Representative/DPW, 8701 Morrissette Drive, Springfield, Virginia 22152. All requests for a hearing should also be sent to: Drug Enforcement Administration, Attn: Administrator, 8701 Morrissette Drive, Springfield, Virginia 22152.

SUPPLEMENTARY INFORMATION: In accordance with 21 CFR 1301.34(a), this is notice that on March 7, 2023, AndersonBrecon, Inc., 4545 Assembly Drive, Rockford, Illinois 61109–3081, applied to be registered as an importer of the following basic class(es) of controlled substance(s):

Controlled substance	Drug code	Schedule
Tetrahydrocannabinols	7370	I
3,4-Methylenedioxymethamphetamine	7405	I

The company plans to import the listed controlled substances for clinical trials studies only. No other activities for these drug codes are authorized for this registration.

Approval of permit applications will occur only when the registrant's business activity is consistent with what is authorized under 21 U.S.C. 952(a)(2). Authorization will not extend to the import of Food and Drug Administration-approved or

non-approved finished dosage forms for commercial sale.

Matthew Strait,

Deputy Assistant Administrator.

[FR Doc. 2023–08855 Filed 4–26–23; 8:45 am]

BILLING CODE P

DEPARTMENT OF JUSTICE

Drug Enforcement Administration

[Docket No. DEA–1184]

Importer of Controlled Substances Application: Pfizer Inc.

AGENCY: Drug Enforcement Administration, Justice.

ACTION: Notice of application.

SUMMARY: Pfizer Inc. has applied to be registered as an importer of basic class(es) of controlled substance(s). Refer to **SUPPLEMENTARY INFORMATION** listed below for further drug information.

DATES: Registered bulk manufacturers of the affected basic class(es), and applicants therefore, may submit electronic comments on or objections to the issuance of the proposed registration on or before May 30, 2023. Such persons may also file a written request for a hearing on the application on or before May 30, 2023.

ADDRESSES: The Drug Enforcement Administration requires that all comments be submitted electronically through the Federal eRulemaking Portal, which provides the ability to type short comments directly into the comment field on the web page or attach a file for lengthier comments. Please go to *https://www.regulations.gov* and follow the online instructions at that site for submitting comments. Upon submission of your comment, you will receive a Comment Tracking Number. Please be aware that submitted comments are not instantaneously available for public view on *https://www.regulations.gov.* If you have received a Comment Tracking Number, your comment has been successfully submitted and there is no need to resubmit the same comment. All requests for a hearing must be sent to: (1) Drug Enforcement Administration, Attn: Hearing Clerk/OALJ, 8701 Morrissette Drive, Springfield, Virginia 22152; and (2) Drug Enforcement Administration, Attn: DEA Federal Register Representative/DPW, 8701 Morrissette Drive, Springfield, Virginia 22152. All requests for a hearing should also be sent to: Drug Enforcement Administration, Attn: Administrator, 8701 Morrissette Drive, Springfield, Virginia 22152.

SUPPLEMENTARY INFORMATION: In accordance with 21 CFR 1301.34(a), this is notice that on March 16, 2023, Pfizer Inc., 445 Eastern Point Road, Groton, Connecticut 06340–5157, applied to be registered as an importer of the following basic class(es) of controlled substance(s):

Controlled substance	Drug code	Schedule
Pentobarbital	2270	II

The company plans to import the listed controlled substance as finished dosage units for use in clinical trials. No other activities for this drug code is authorized for this registration.

Approval of permit applications will occur only when the registrant's business activity is consistent with what is authorized under 21 U.S.C. 952(a)(2). Authorization will not extend to the import of Food and Drug Administration-approved or non-approved finished dosage forms for commercial sale.

Matthew Strait,

Deputy Assistant Administrator.

[FR Doc. 2023–08858 Filed 4–26–23; 8:45 am]

BILLING CODE 4410–09–P

DEPARTMENT OF JUSTICE

Notice of Lodging of Proposed Consent Decree under the Clean Air Act

On April 20, 2023 the Department of Justice lodged a proposed consent decree with the United States District Court for the District of Utah in the lawsuit entitled *United States, State of North Dakota, and State of Wyoming* v. *MPLX, LP,* Civil Action No. 2:23–cv–00252–RJS.

The United States, State of North Dakota and State of Wyoming filed this lawsuit under the Clean Air Act. The complaint alleges multiple violations of the Leak Detection and Repair provisions and other requirements in the Clean Air Act's New Source Performance Standards and National Emissions Standards for Hazardous Air Pollutants. The consent decree will require defendant to take specified actions to come into compliance with the Clean Air Act, pay a civil penalty of $2 million, and take several pollution mitigation actions to reduce volatile organic compound emissions.

The publication of this notice opens a period for public comment on the proposed consent decree. Comments should be addressed to the Assistant Attorney General, Environment and Natural Resources Division, and should refer to *United States, State of North Dakota, and State of Wyoming* v. *MPLX, LP,* D.J. Ref. No. 90–5–2–1–11374/2. All comments must be submitted no later than thirty (30) days after the publication date of this notice. Comments may be submitted either by email or by mail:

To submit comments:	*Send them to:*
By email	*pubcomment-ees.enrd@usdoj.gov.*
By mail	Assistant Attorney General, U.S. DOJ—ENRD, P.O. Box 7611, Washington, DC 20044–7611.

During the public comment period, the proposed consent decree may be examined and downloaded at this Justice Department website: *http://www.justice.gov/enrd/consent-decrees.* We will provide a paper copy of the proposed consent decree upon written request and payment of reproduction costs. Please mail your request and payment to: Consent Decree Library, U.S. DOJ—ENRD, P.O. Box 7611, Washington, DC 20044–7611.

Please enclose a check or money order for $41.00 (25 cents per page reproduction cost) payable to the United States Treasury.

Jeffrey Sands,

Assistant Section Chief, Environmental Enforcement Section, Environment and Natural Resources Division.

[FR Doc. 2023–08838 Filed 4–26–23; 8:45 am]

BILLING CODE 4410–15–P

DEPARTMENT OF JUSTICE

[OMB Number 1140–0070]

Agency Information Collection Activities; Proposed eCollection eComments Requested; Revision of a Previously Approved Collection Application for Explosives License or Permit—ATF Form 5400.13/5400.16

AGENCY: Bureau of Alcohol, Tobacco, Firearms and Explosives, Department of Justice.

ACTION: 60-Day notice.

SUMMARY: The Bureau of Alcohol, Tobacco, Firearms and Explosives, U.S. Department of Justice, is submitting the following information collection request to the Office of Management and Budget (OMB) for review and approval in accordance with the Paperwork Reduction Act of 1995.

DATES: The Department of Justice encourages public comment and will accept input until June 26, 2023.

FOR FURTHER INFORMATION CONTACT: If you have additional comments including on the estimated public burden or associated response time, suggestions, or need a copy of the proposed information collection instrument with instructions or additional information, please contact Shawn Stevens, Explosives Industry Liaison, Federal Explosives Licensing Center, either by mail at 244 Needy Road, Martinsburg, WV 25405, by email at *Shawn.Stevens@atf.gov,* or by telephone at 304–616–4400.

SUPPLEMENTARY INFORMATION: Written comments and suggestions from the public and affected agencies concerning the proposed collection of information are encouraged. Your comments should address one or more of the following four points:

—Evaluate whether the proposed collection of information is necessary for the proper performance of the functions of the National Security Division, including whether the information will have practical utility;

—Evaluate the accuracy of the agency's estimate of the burden of the proposed collection of information, including the validity of the methodology and assumptions used;

—Evaluate whether and if so, how the quality, utility, and clarity of the information to be collected can be enhanced; and

—Minimize the burden of the collection of information on those who are to respond, including through the use of appropriate automated, electronic, mechanical, or other technological collection techniques or other forms of information technology, *e.g.,* permitting electronic submission of responses.

Abstract: Per 18 U.S.C. 845 (Licenses and user permits) applicants must submit ATF Form 5400.13/5400.16 to determine if the applicant is qualified to be a licensee or permittee under the provisions of the statute. The form will be submitted to ATF to determine whether the person who provided the information, is qualified to be issued a license or permit. The information collection (IC) OMB 1140–0070 (Application for Explosives License or Permit—ATF F 5400.13/5400.16) is being revised due to material changes to the form, such as a revised format and layout to improve user experience, removal of the Responsible Persons List along with accompanying sections, removal of the Explosives Storage Magazine Description Worksheet and replaced with a condensed version as a question.

Overview of This Information Collection

(1) *Type of Information Collection:* Revision of a currently approved collection.

(2) *The Title of the Form/Collection:* Application for Explosives License or Permit—ATF F 5400.13/5400.16

(3) *The agency form number, if any, and the applicable component of the Department sponsoring the collection:* Form number (if applicable): ATF F 5400.13/5400.16. Component: Bureau of Alcohol, Tobacco, Firearms and Explosives, U.S. Department of Justice.

(4) *Affected public who will be asked or required to respond as well as the obligation:* Private Sector—business or other for-profit, not-for-profit institutions and individuals or households. The obligation to respond is required to obtain or retain a benefit.

(5) *An estimate of the total number of respondents, frequency of responses and the amount of time estimated for an average respondent to respond:* An estimated 10,200 respondents will complete this form once annually, and it will take each respondent approximately 1.5 hours to complete their responses.

(6) *An estimate of the total public burden (in hours) and annual cost burden associated with the collection:* The estimated annual public burden associated with this collection is 15,300 hours which is equal to 10,200 (total respondents) * 1(# of response per respondent) * 1.5 hours (total time taken to prepare each response). The annual cost burden for this collection is $51,600 as the fee associated with the collection ranges between $12–200 per applicant.

TOTAL ANNUAL BURDEN

Activity	Number of respondents	Frequency	Total annual responses	Time per response	Total annual burden (hours)	Rate for collection	Annual cost burden
ATF Form 5400.13/5400.16	10,200	1	10,200	1.5	15,300	$12–200	$51,600
Unduplicated Totals	10,200		10,200		15,300		51,600

If additional information is required contact: John R. Carlson, Department Clearance Officer, United States Department of Justice, Justice Management Division, Policy and Planning Staff, Two Constitution Square, 145 N Street NE, 4W–218, Washington, DC 20530.

Dated: April 24, 2023.

John R. Carlson,

Department Clearance Officer for PRA, U.S. Department of Justice.

[FR Doc. 2023–08868 Filed 4–26–23; 8:45 am]

BILLING CODE 4410–PF–P

DEPARTMENT OF JUSTICE

Notice of Lodging of Proposed Consent Decree Under the Clean Air Act

On April 20, 2023 the Department of Justice lodged a proposed consent decree with the United States District Court for the District of Colorado in the lawsuit entitled *United States et al.* v. *Williams Companies, Inc. et al.,* Civil Action No. 1:23-cv-00994–KLM.

The United States, the Southern Ute Indian Tribe, the States of Alabama, Colorado, West Virginia, and Wyoming, and the Louisiana Department of Environmental Quality filed this lawsuit under the Clean Air Act. The complaint alleges multiple violations of the Leak Detection and Repair provisions and other requirements in the Clean Air Act's New Source Performance Standards and National Emissions Standards for Hazardous Air Pollutants. The consent decree requires the defendants to take specified actions to address the alleged violations, pay a civil penalty of $3,750,000, and take several pollution mitigation actions to reduce volatile organic compound emissions.

The publication of this notice opens a period for public comment on the proposed consent decree. Comments should be addressed to the Assistant Attorney General, Environment and Natural Resources Division, and should refer to *United States et al.* v. *Williams Companies, Inc. et al.,* D.J. Ref. No. 90–5–2–1–06938/5. All comments must be submitted no later than thirty (30) days after the publication date of this notice. Comments may be submitted either by email or by mail:

To submit comments:	*Send them to:*
By email	*pubcomment-ees.enrd@usdoj.gov.*
By mail	Assistant Attorney General, U.S. DOJ—ENRD, P.O. Box 7611, Washington, DC 20044–7611.

During the public comment period, the proposed consent decree may be examined and downloaded at this Justice Department website: *http://www.justice.gov/enrd/consent-decrees.* We will provide a paper copy of the proposed consent decree upon written request and payment of reproduction costs. Please mail your request and payment to: Consent Decree Library, U.S. DOJ—ENRD, P.O. Box 7611, Washington, DC 20044–7611.

Please enclose a check or money order for $66.00 (25 cents per page reproduction cost) payable to the United States Treasury.

Jeffrey Sands,

Assistant Section Chief, Environmental Enforcement Section, Environment and Natural Resources Division.

[FR Doc. 2023–08926 Filed 4–26–23; 8:45 am]

BILLING CODE 4410–15–P

DEPARTMENT OF LABOR

Mine Safety and Health Administration

Petition for Modification of Application of Existing Mandatory Safety Standards

AGENCY: Mine Safety and Health Administration, Labor.

ACTION: Notice.

SUMMARY: This notice is a summary of a petition for modification submitted to the Mine Safety and Health Administration (MSHA) by the party listed below.

DATES: All comments on the petition must be received by MSHA's Office of Standards, Regulations, and Variances on or before May 30, 2023.

ADDRESSES: You may submit comments identified by Docket No. MSHA–2023–0012 by any of the following methods:

1. *Federal eRulemaking Portal: https://www.regulations.gov.* Follow the instructions for submitting comments for MSHA–2023–0012.
2. *Fax:* 202–693–9441.
3. *Email: petitioncomments@dol.gov.*
4. *Regular Mail or Hand Delivery:* MSHA, Office of Standards, Regulations, and Variances, 201 12th Street South, Suite 4E401, Arlington, Virginia 22202–5452.

Attention: S. Aromie Noe, Director, Office of Standards, Regulations, and Variances. Persons delivering documents are required to check in at the receptionist's desk in Suite 4E401. Individuals may inspect copies of the petition and comments during normal business hours at the address listed above. Before visiting MSHA in person, call 202–693–9455 to make an appointment, in keeping with the Department of Labor's COVID–19 policy. Special health precautions may be required.

FOR FURTHER INFORMATION CONTACT: S. Aromie Noe, Office of Standards, Regulations, and Variances at 202–693–9440 (voice), *Petitionsformodification@dol.gov* (email), or 202–693–9441 (fax). [These are not toll-free numbers.]

SUPPLEMENTARY INFORMATION: Section 101(c) of the Federal Mine Safety and Health Act of 1977 and Title 30 of the Code of Federal Regulations (CFR) part 44 govern the application, processing, and disposition of petitions for modification.

I. Background

Section 101(c) of the Federal Mine Safety and Health Act of 1977 (Mine Act) allows the mine operator or representative of miners to file a petition to modify the application of any mandatory safety standard to a coal or other mine if the Secretary of Labor determines that:

1. An alternative method of achieving the result of such standard exists which will at all times guarantee no less than the same measure of protection afforded the miners of such mine by such standard; or
2. The application of such standard to such mine will result in a diminution of safety to the miners in such mine.

In addition, sections 44.10 and 44.11 of 30 CFR establish the requirements for filing petitions for modification.

II. Petition for Modification

Docket Number: M–2023–007–C.

Petitioner: Marfork Coal Company, LLC, P.O. Box 457, Whitesville, WV 25209.

Mine: Glen Alum Tunnel Mine, MSHA ID No. 46–09375, located in Raleigh County, West Virginia.

Regulation Affected: 30 CFR 75.1700, Oil and gas wells.

Modification Request: The petitioner requests a modification of 30 CFR 75.1700 as it relates to oil and gas wells. Specifically, the petitioner is proposing to mine through or near (within the 300 feet diameter safety barrier) plugged oil or gas wells.

The petitioner states that:

(a) The Glen Alum Tunnel Mine extracts coal from the Glen Alum Tunnel coal seam. The mine operates one continuous mining machine section producing coal. Future workplans include adding an additional continuous mining machine.

(b) The mine will use a room and pillar method of mining.

(c) In the reserve area of the mine, many oil and gas wells exist.

The petitioner proposes the following alternative method:

(a) Prior to plugging an oil or gas well, the following procedures shall be followed:

(1) A diligent effort shall be made to clean the well to the original total depth. The mine operator shall contact the District Manager prior to stopping the operation to pull casing or clean out the total depth of the well.

(2) If this depth cannot be reached, and the total depth if the well is less than 4,000 feet, the operator shall completely clean out the well from the surface to at least 200 feet below the base of the lowest mineable coal seam, unless the District Manager requires cleaning to a greater depth based on the geological strata or pressure within the well.

(3) The operator shall provide the District Manager with all information it possesses concerning the geological nature of the strata and the pressure of the well. If the total depth of the well is 4,000 feet or greater, the operator shall completely clean out the well from the surface to at least 400 feet below the base of the lowest mineable coal seam. The operator shall remove all material from the entire diameter of the well, wall to wall. If the total depth of the well is unknown and there is no historical information, the mine operator must contact the District Manager before proceeding.

(4) The operator shall prepare down-hole logs for each well. Logs shall consist of a caliper survey, a gamma log, a bond log, and deviation survey for determining the top, bottom, and thickness of all coal seams down to the lowest mineable coal seam, potential hydrocarbon producing strata, and the

location for a bridge plug. In addition, a journal shall be maintained describing: the depth of each material encountered; the nature of each material encountered; bit size and type used to drill each portion of the hole; length and type of each material used to plug the well; length of casing(s) removed, perforated, ripped, or left in place; any sections where casing was cut or milled; and other pertinent information concerning the cleaning and sealing the well. Invoices, work-orders, and other records relating to all work on the well shall be maintained as part of the logs and provided to MSHA upon request.

(5) When cleaning out the well as described in alternative method section (a), the operator shall make a diligent effort to remove all of the casing in the well. After the well is completely cleaned out and all the casing removed, the well shall be plugged to the total depth by pumping cement slurry and pressurizing to at least 200 pounds per square inch (psi). If the casing cannot be removed, it shall be cut, milled, perforated, or ripped at all mineable coal seam levels to facilitate the removal of any remaining casing in the coal seam by the mining equipment. Any casing which remains shall be perforated of ripped to permit the injection of cement into voids within and around the well.

(6) All casing remaining at mineable coal seam levels shall be perforated or ripped at least every 5 feet from 10 feet below the coal seam to 10 feet above the coal seam. Perforations or rips are required at least every 50 feet from 200 feet (400 feet if the total well depth is 4,000 feet or greater) below the base of the lowest mineable coal seam up to 100 feet above the uppermost mineable coal seam. The mine operator shall take appropriate steps to ensure that the annulus between the casing and the well walls are filled with expanding (minimum 0.5 percent expansion upon setting) cement and contain no voids.

(7) If it is not possible to remove all of the casing, the operator shall notify the District Manager before any other work is performed. If the well cannot be cleaned out or the casing removed, the operator shall prepare the well as described from the surface to at least 200 feet below the base of the lowest mineable coal seam for wells 4,000 feet or greater, unless the District Manger requires cleaning out and removal of casing to a greater depth based on the geological strata or pressure within the well.

(8) If the District Manager concludes that the completely cleaned out well is emitting excessive amounts of gas, the operator shall place a mechanical bridge plug in the well. It shall be placed in a competent stratum at least 200 feet (400 feet if the total well depth is 4,000 feet or greater) below the base of the lowest mineable coal seam, but above the top of the uppermost hydrocarbon producing stratum, unless the District Manager requires a greater distance based on the geological strata or the pressure within the well. The operator shall provide the District Manager with all information it possesses concerning the geological nature of the strata and the pressure of the well. If it is not possible to set a mechanical bridge plug, an appropriately sized packer may be used. The mine operator shall document what has been done to ''kill the well'' and plug the hydrocarbon producing strata. If the upper-most hydrocarbon producing stratum is within 300 feet of the base of the lowest minable coal seam, the operator shall properly place mechanical bridge plugs as described in alternative method section (a) to isolate the hydrocarbon producing stratum from the expanding cement plug. The operator shall place a minimum of 200 feet (400 feet if the total well depth is 4,000 feet or greater) of expanding cement below the lowest mineable coal seam, unless the District Manager requires a greater distance based on the geological strata or the pressure within the well.

(b) The following procedures shall be followed for plugging or re-plugging oil or gas wells to the surface after completely cleaning out the well as previously specified:

(1) The operator shall pump expanding cement slurry down the well to form a plug which runs from at least 200 feet (400 feet if the total well depth is 4,000 feet or greater) below the base of the lowest mineable coal seam (or lower if required by the District Manager based on the geological strata or the pressure within the well) to the surface. The expanding cement will be placed in the well under a pressure of at least 200 psi. Portland cement or a lightweight cement mixture may be used to fill the area from 100 feet above the top of the uppermost mineable coal seam (or higher if required by the District Manager based on the geological strata or the pressure within the well) to the surface.

(2) The operator shall embed steel turnings or other small magnetic particles in the top of the cement near the surface to serve as a permanent magnetic monument of the well. In the alternative, a 4 inch or larger diameter casing, set in cement, shall extend at least 36 inches above the ground level with the American Petroleum Institute (API) well number engraved or welded on the casing. When the hole cannot not be marked with a physical monument (*e.g.,* prime farmland), high-resolution GPS coordinates (one-half meter resolution) shall be required.

(c) The following procedures shall be followed for plugging or re-plugging oil and gas wells that are to be used as degasification boreholes after completely cleaning out the well as previously specified:

(1) The operator shall set a cement plug in the well by pumping an expanding cement slurry down the tubing to provide at least 200 feet (400 feet if the total well depth is 4,000 feet of greater) of expanding cement below the lowest mineable coal seam, unless the District Manager requires a greater depth based on the geological strata or the pressure within the well. The expanding cement will be placed in the well under a pressure of at least 200 psi. The top of the expanding cement shall extend at least 50 feet above the top of the coal seam being mined, unless the District Manager requires a greater distance based on the geological strata or the pressure within the well.

(2) The operator shall securely grout into the bedrock of the upper portion of the degasification well a suitable casing to protect it. The remainder of the well may be cased or uncased.

(3) The operator shall fit the top of the degasification casing with a wellhead equipped as required by the District Manager in the approved ventilation plan. Such equipment may include check valves, shut-in valves, sampling ports, flame arrestor equipment, and security fencing.

(4) Operation of the degasification well shall be addressed in the approved ventilation plan. This may include periodic tests of methane levels and limits on the minimum methane concentrations that may be extracted.

(5) After the area of the coal mine that is degassed by a well is sealed or the coal mine is abandoned, the operator shall plug all degasification wells using the following procedures:

(i) The operator shall insert a tube to the bottom of the well or, if not possible, to at least 100 feet above the coal seam being mined. Any blockage must be removed to ensure that the tube can be inserted to this depth.

(ii) The operator shall set a cement plug in the well by pumping Portland cement or a lightweight cement mixture down the tubing until the well is filled to the surface.

(iii) The operator shall embed steel turnings or other small magnetic particles in the top of the cement near the surface to serve as a permanent magnetic monument of the well. In the alternative, a 4 inch or larger casing, set in cement, shall extend at least 36 inches above the ground level with the API well number engraved or welded on the casing.

(d) The following provisions shall apply to all wells which the operator determines, and the MSHA District Manager agrees, cannot be completely cleaned out due to damage to the well caused by subsidence, caving, or other factors.

(1) The operator shall drill a hole adjacent and parallel to the well to a depth of at least 200 feet (400 feet if the total well depth is 4,000 feet or greater) below the lowest mineable coal seam, unless the District Manager requires a greater depth based on the geological strata or the pressure within the well.

(2) The operator shall use a geophysical sensing device to locate any casing which may remain in the well.

(3) If the well contains casings, the operator shall drill into the well from the parallel hole. From 10 feet below the coal seam to 10 feet above the coal seam, the operator shall perforate or rip all casings at intervals of at least every 5 feet. Beyond this distance, the operator shall perforate or rip at least every 50 feet from at least 200 feet (400 feet if the total well depth is 4,000 feet or greater) below the base of the lowest mineable coal seam up to 100 feet above the seam being mined, unless the District Manager requires a greater distance based on the geological strata or the pressure within the well. The operator shall fill the annulus between the casings and the well wall with expanding (minimum 0.5 percent expansion upon setting) cement and shall ensure that these areas contain no voids. If the operator, using a casing bond log, can demonstrate to the satisfaction of the District Manager that the annulus of the well is adequately sealed with cement, the operator shall not be required to perforate or rip the casing for that particular well or fill these areas with cement. When multiple casing and tubing strings are present in the coal horizon(s), any remaining casing shall be ripped or perforated and filled with expanding cement. An acceptable casing bond log for each casing and tubing string can be used in lieu of ripping or perforating multiple strings.

(4) Where the operator determines, and the District Manager agrees, that there is insufficient casing in the well to allow the methods previously outlined to be used, the operator shall use a horizontal hydraulic fracturing technique to intercept the original well. From at least 200 feet (400 feet if the total well depth is 4,000 feet or greater) below the base of the lowest mineable seam to a point at least 50 feet above the seam being mined, the operator shall fracture in at least 6 places at intervals to be agree upon by the operator and the District Manager after considering the geological strata and the pressure within the well. The operator shall pump expanding cement into the fractured well in sufficient quantities and in a manner which fills all intercepted voids.

(5) The operator shall prepare down-hole logs for each well. Logs shall consist of a caliper survey, gamma log, a bond log, and a deviation survey for determining the top, bottom, and thickness of all coal seams down to the lowest mineable coal seam, potential hydrocarbon producing strata, and the location of any existing bridge plug. The operator shall obtain the logs from the adjacent hole rather than the well if the condition of the well makes it impractical to insert the equipment necessary to obtain the log.

(6) A journal shall be maintained describing: the depth of each material encountered; the nature of each material encountered; bit size and type used to drill each portion of the hole; length and type of each material used to plug the well; length of casing(s) removed, perforated, or ripped, or left in place; any sections where casing was cut or milled; and other pertinent information concerning sealing the well. Invoices, work-orders, and other records relating to all work on the well shall be maintained as part of this journal and provided to MSHA upon request.

(7) After the operator has plugged the well, the operator shall plug the adjacent hole, from the bottom to the surface, with Portland cement or a lightweight cement mixture. The operator shall embed steel turnings or other small magnetic particles in the top of the cement near the surface to serve as a permanent magnetic monument of the well. In the alternative, a 4 inch or larger casing, set in cement, shall extend at least 36 inches above the ground level. A combination of the methods outlined previously may have to be used in a single well, depending upon the conditions of the hole and the presence of casings. The operator and the District Manager shall discuss the nature of each hole and if the District Manager requires more than one method be utilized. The mine operator may submit an alternative plan to the District Manager for approval to use different methods to address wells that cannot be completely cleaned out. Additional documentation and certification by a registered petroleum engineer to support the proposed alternative methods shall be submitted if required by the District Manager.

(e) The following procedures shall be followed after approval has been granted by the District Manager to mine within the safety barrier established by 30 CFR 75.1700 or to mine through a plugged or re-plugged well.

(1) A representative of the operator, a representative of the miners, the appropriate State agency, or the MSHA District Manager may request that a conference be conducted prior to intersecting through any plugged or re-plugged well. The party requesting the conference shall notify all other parties listed above within a reasonable time prior to the conference to provide opportunity for participation. The purpose of the conference shall be to review, evaluate, and accommodate any abnormal or unusual circumstance related to the condition of the well or surrounding strata when such conditions are encountered.

(2) The operator shall intersect a well on a shift approved by the District Manager. The operator shall notify the District Manager and the miners' representative in sufficient time prior to intersecting a well to provide an opportunity to have representatives present.

(3) When using continuous mining methods, the operator shall install drivage sights at the last open crosscut near the place to be mined to ensure intersection of the well. The drivage sites shall not be more than 50 feet from the well.

(4) When using longwall mining methods, distance markers shall be installed on 5-foot centers for a distance of 50 feet in advance of the well in the headgate entry and in the tailgate entry.

(5) The operator shall ensure that fire-fighting equipment including fire extinguishers, rock dust, and sufficient fire hose to reach the working face area of the well intersection (when either the conventional or continuous mining method is used) is available and operable during all well intersections. The fire hose shall be located in the last open crosscut of the entry or room. The operator shall maintain the water line to the belt conveyor tailpiece along with a sufficient amount of fire hose to reach the farthest point of penetration on the section. When the longwall mining method is used, a hose to the longwall water supply is sufficient.

(6) The operator shall ensure that sufficient supplies of roof support and ventilation materials shall be available and located at the last open crosscut. In addition, emergency plugs and suitable sealing materials shall be available in the immediate area of the well intersection.

(7) On the shift prior to intersecting the well, the operator shall test all equipment and check it for permissibility. Water sprays, water

pressures, and water flow rates used for dust and spark suppression shall be examined and any deficiencies corrected.

(8) The operator shall calibrate the methane monitor(s) on the longwall, continuous mining machine, or cutting machine and loading machine on the shift prior to intersecting the well.

(9) When mining is in progress, the operator shall perform tests for methane with a handheld methane detector at least every 10 minutes from the time that mining with the continuous mining machine or longwall face is within 30 feet of the well until the well is intersected. During the actual cutting process, no individual shall be allowed on the return side until the well intersection has been completed, and the area has been examined and declared safe. All workplace examinations on the return side of the shearer will be conducted while the shearer is idle. The operator's most current approved ventilation plan will be followed at all times unless the District Manager requires a greater air velocity for the intersect.

(10) When using continuous or conventional mining methods, the working place shall be free from accumulations of coal dust and coal spillages, and rock dust shall be placed on the roof, rib, and floor to within 20 feet of the face when intersecting the well. On longwall sections, rock dusting shall be conducted and placed on the roof, rib, and floor up to both the headgate and tailgate gob.

(11) When the well is intersected, the operator shall de-energize all equipment and thoroughly examine and determine the area is safe before permitting mining to resume.

(12) After a well has been intersected and the working place determined to be safe, mining shall continue inby the well a sufficient distance to permit adequate ventilation around the area of the well.

(13) When necessary, torches shall be used for inadequately or inaccurately cut or milled casings. No open flame shall be permitted in the area until adequate ventilation has been established around the well bore and methane levels of less than 1.0 percent are present in all areas that will be exposed to flames and sparks from the torch. The operator shall apply a thick layer of rock dust to the roof, face, floor, ribs and any exposed coal within 20 feet of the casing prior to any use of torches.

(14) Non-sparking (brass) tools shall be located on the working section and shall be used exclusively to expose and examine cased wells.

(15) No person shall be permitted in the area of the well intersection except those engaged in the operation, including company personnel, representatives of the miners, MSHA personnel, and personnel from the appropriate State agency.

(16) The operator shall alert all personnel in the mine to the planned intersection of the well prior to their going underground if the planned intersection is to occur during their shift. This warning shall be repeated for all shifts until the well has been mined through.

(17) The well intersection shall be under the direct supervision of a certified individual. Instructions concerning the well intersection shall be issued only by the certified individual in charge.

(18) If the mine operator cannot find the well in the middle of the panel or a gate section misses the anticipated intersection, mining shall cease and the District Manager shall be notified.

(f) A copy of the PDO shall be maintained at the mine and be available to the miners.

(g) If the well is not plugged to the total depth of all mineable coal seams identified in the core hole logs, any coal seams beneath the lowest plug shall remain subject to the barrier requirements of 30 CFR 75.1700.

(h) All necessary safety precautions and safe practices required by MSHA regulations and State regulatory agencies with jurisdiction over the plugging site shall be followed.

(i) All miners involved in the plugging or re-plugging operations shall be trained on the contents of the PDO prior to starting the process.

(j) Mechanical bridge plugs shall incorporate the best available technologies required or recognized by the State regulatory agency and/or oil and gas industry.

(k) Within 30 days after the PDO becomes final, the operator shall submit proposed revisions for its approved 30 CFR part 48 training plan to the District Manager. These proposed revisions shall include initial and refresher training on compliance with the terms and conditions stated in the PDO. The operator shall provide all miners involved in well intersection with training on the requirements of the PDO prior to mining within 150 feet of the next well intended to be mined through.

(l) The responsible person required under 30 CFR 75.1501 shall be responsible for well intersection emergencies. The well intersection procedures shall be reviewed by the responsible person prior to any planned intersection.

(m) Within 30 days after the PDO becomes final, the operator shall submit proposed revisions for its approved mine emergency evacuation and firefighting program of instruction required under 30 CFR 75.1502. The operator shall revise the program of instruction to include the hazards and evacuation procedures to be used for well intersections. All underground miners will be trained in this revised plan within 30 days of the submittal.

In support of the proposed alternative method, the petitioner submitted a map of well locations.

The petitioner asserts that the alternate method proposed will at all times guarantee no less than the same measure of protection afforded the miners under the mandatory standard.

Song-ae Aromie Noe,

Director, Office of Standards, Regulations, and Variances.

[FR Doc. 2023–08869 Filed 4–26–23; 8:45 am]

BILLING CODE 4520–43–P

DEPARTMENT OF LABOR

Occupational Safety and Health Administration

[Docket No. OSHA–2023–0003]

National Advisory Committee on Occupational Safety and Health (NACOSH): Notice of Meeting

AGENCY: Occupational Safety and Health Administration (OSHA), Labor.

ACTION: Notice of NACOSH meeting.

SUMMARY: The National Advisory Committee on Occupational Safety and Health (NACOSH) will meet Wednesday, May 31, 2023, in a hybrid format. Committee members will meet in person; the public is invited to participate either in person or virtually via WebEx.

DATES: The NACOSH will meet from 9:00 a.m. to 4:00 p.m., ET, Wednesday, May 31, 2023.

ADDRESSES:

Submission of comments and requests to speak: Comments and requests to speak at the NACOSH meeting, including attachments, must be submitted electronically at *www.regulations.gov,* the Federal eRulemaking Portal by May 15, 2023. Comments must identify the docket number for this **Federal Register** notice (Docket No. OSHA–2023–0003). Follow the online instructions for submitting comments.

Registration: All persons wishing to attend the meeting in-person or virtually must register via the registration link on

the NACOSH web page at *https://www.osha.gov/advisorycommittee/nacosh.* Upon registration, in-person attendees will receive directions for participation and virtual attendees will receive a WebEx link for remote access to the meeting. At this time, OSHA is limiting in-person attendance to 25 members of the public, to be determined based on the time requests are made via the registration link.

Requests for special accommodations: Submit requests for special accommodations, including translation services for this NACOSH workgroup meeting by May 15, 2023, to Ms. Christie Garner, Directorate of Standards and Guidance, OSHA, U.S. Department of Labor; telephone: (202) 693–2246; email: *garner.christie@dol.gov.*

Instructions: All submissions must include the agency name and the OSHA docket number for this **Federal Register** notice (Docket No. OSHA–2023–0003). OSHA will place comments and requests to speak, including personal information, in the public docket, which may be available online. Therefore, OSHA cautions interested parties about submitting personal information such as Social Security numbers and birthdates.

Docket: To read or download documents in the public docket for this NACOSH meeting, go to *www.regulations.gov.* All documents in the public docket are listed in the index; however, some documents (*e.g.,* copyrighted material) are not publicly available to read or download through *www.regulations.gov.* All submissions, including copyrighted material, are available for inspection through the OSHA Docket Office. Contact the OSHA Docket Office at (202) 693–2350 (TTY (877) 889–5627) for assistance in locating docket submissions.

FOR FURTHER INFORMATION CONTACT:

For press inquiries: Mr. Frank Meilinger, Director, OSHA Office of Communications, U.S. Department of Labor; telephone: (202) 693–1999; email: *meilinger.francis2@dol.gov.*

For general information about NACOSH: Ms. Lisa Long, Deputy Director, Directorate of Standards and Guidance, OSHA, U.S. Department of Labor; telephone: (202) 693–2409; email: *long.lisa@dol.gov.*

Telecommunication requirements: For additional information about the telecommunication requirements for the meeting, please contact Ms. Christie Garner, Directorate of Standards and Guidance, OSHA, U.S. Department of Labor; telephone: (202) 693–2246; email: *garner.christie@dol.gov.*

*For copies of this **Federal Register** Notice:* Electronic copies of this **Federal Register** notice are available at *www.regulations.gov.* This notice, as well as news releases and other relevant information, are also available at OSHA's web page at *https://www.osha.gov/advisorycommittee/nacosh.*

SUPPLEMENTARY INFORMATION:

I. Background

NACOSH was established by Section 7(a) of the Occupational Safety and Health Act of 1970 (OSH Act) (29 U.S.C. 651, 656) to advise, consult with, and make recommendations to the Secretary of Labor and the Secretary of Health and Human Services on matters relating to the administration of the OSH Act. NACOSH is a continuing advisory committee of indefinite duration.

NACOSH operates in accordance with the Federal Advisory Committee Act (FACA) (5 U.S.C. App.2), its implementing regulations (41 CFR part 102–3), and OSHA's regulations on NACOSH (29 CFR 1912.5 and 29 CFR part 1912a).

II. Meeting Information

Public attendance will be in a hybrid format, either in person or virtually via WebEx. Meeting information will be posted in the Docket (Docket No. OSHA–2023–0003) and on the NACOSH web page, *https://www.osha.gov/advisorycommittee/nacosh,* prior to the meeting.

The NACOSH will meet from 9:00 a.m. to 4:00 p.m., ET on May 31, 2023.

Meeting agenda: The tentative agenda for this meeting includes:

- Introduction of new members;
- NACOSH membership update;
- OSHA Update;
- The National Institute for Occupational Safety and Health (NIOSH) Update;
- Report and discussion from Heat Injury and Illness Prevention Work Group on Potential Elements of a Proposed Heat Injury and Illness Prevention Standard; and
- Whistleblower Discussion.

Authority and Signature

James S. Frederick, Deputy Assistant Secretary of Labor for Occupational Safety and Health, authorized the preparation of this notice under the authority granted by 29 U.S.C. 655(b)(1) and 656(b), 5 U.S.C. App. 2, 29 CFR parts 1912 and 1912a, and Secretary of Labor's Order No. 8–2020 (85 FR 58393).

Signed at Washington, DC, on April 20, 2023.

James S. Frederick,

Deputy Assistant Secretary for Occupational Safety and Health.

[FR Doc. 2023–08902 Filed 4–26–23; 8:45 am]

BILLING CODE 4510–26–P

OFFICE OF MANAGEMENT AND BUDGET

Executive Order 14081 Advancing Biotechnology and Biomanufacturing Innovation for a Sustainable, Safe, and Secure American Bioeconomy—Request for Information; National Biotechnology and Biomanufacturing Initiative—Measuring the Bioeconomy

AGENCY: Office of Information and Regulatory Affairs, Office of Management and Budget, Executive Office of the President.

ACTION: Request for information.

SUMMARY: The Chief Statistician of the United States (CSOTUS) in the Office of Management and Budget (OMB), Office of Information and Regulatory Affairs, was charged in the Executive Order (E.O. 14081), ''Advancing Biotechnology and Biomanufacturing Innovation for a Sustainable, Safe, and Secure American Bioeconomy,'' with improving and enhancing Federal statistical data collection designed to characterize and measure the economic value of the U.S. bioeconomy. The CSOTUS was also charged with establishing an Interagency Technical Working Group to recommend bioeconomy-related revisions for the North American Industry Classification System (NAICS) and the North American Product Classification System (NAPCS).[1] The bioeconomy refers to a segment of the total economy utilizing or derived from biological resources, and includes manufacturing processes, technologies, products and services. These may encompass, wholly or in part, industries and products including fuel, food, medicine, chemicals, and technology. This **Federal Register** Notice (FRN) is a Request for Information (RFI) seeking public input on existing or potential bioeconomy-related industries and products that are established, emerging, or currently embedded in existing industry/manufacturing processes.

[1] Executive Order 14081 of September 12, 2022 (Advancing Biotechnology and Biomanufacturing Innovation for a Sustainable, Safe, and Secure American Bioeconomy)—*See https://www.federalregister.gov/documents/2022/09/15/2022-20167/advancing-biotechnology-and-biomanufacturing-innovation-for-a-sustainable-safe-and-secure-american.*

DATES: To ensure consideration of comments on potential bioeconomy-related industries and products solicited in this notice, please submit all comments in writing as soon as possible, but no later than 45 days from the publication date of this RFI. Send comments on or before June 12, 2023. Because of delays in the receipt of regular mail related to security screening, respondents are encouraged to send comments electronically (see **ADDRESSES** section, below).

ADDRESSES: Submit comments through *www.regulations.gov,* a Federal E-Government website that allows the public to find, review, and submit comments on documents that agencies have published in the **Federal Register** and that are open for comment. Enter ''OMB–2023–0012'' (in quotes) in the Comment or Submission search box, click Go and follow the instructions for submitting comments.

Comments received by the date specified above will be included as part of the official record. Please include the Docket ID (OMB–2023–0012) and the phrase ''National Biotechnology and Biomanufacturing Initiative—Measuring the Bioeconomy'' at the beginning of your comments. Due to time constraints, electronic submissions received after the deadline cannot be ensured to be incorporated or taken into consideration.

Please indicate which questions in the **SUPPLEMENTARY INFORMATION** section you are responding to.

Privacy Notice: Information submitted in response to this RFI will be maintained in the OMB Public Input System of Records, OMB/INPUT/01 88 FR 20913. OMB generally makes comments received from members of the public available for public viewing on the Federal Rulemaking Portal at *https://www.regulations.gov.* As such, commenters should not include information that they do not wish to make publicly available, including information of a confidential nature, such as sensitive personal information or proprietary information. Please note that if you submit your email address, it will be automatically captured and included as part of the comment that is placed in the public docket; however, *www.regulations.gov* does include the option of commenting anonymously. For more detail about how OMB may maintain and disclose submitted information, please review the System of Records Notice at 88 FR 20913.

Electronic Availability: **Federal Register** notices are available electronically at *http://www.regulations.gov.* The NAICS website at *www.census.gov/naics* contains NAICS United States **Federal Register** notices, Economic Classification Policy Committee (ECPC) Issues Papers, ECPC Reports, the structures, industry definitions, and related documents for all versions of NAICS United States.

Public Review Procedure: All comments and proposals received in response to this notice will be available for public inspection.

Instructions: Response to this RFI is voluntary. Respondents may provide input on any aspects of this solicitation. OMB is particularly interested in receiving comments on the questions posed by the Bioeconomy Interagency Technical Working Group (Working Group) tasked with developing recommendations for revisions to the NAICS, and/or the NAPCS. OMB's established process for updating existing Statistical Policy Directives includes technical evaluation of the current standard by an interagency working group composed of career Federal subject matter experts; additional technical research, testing, and analysis to close identified gaps; and solicitation and consideration of public comment on ways to improve the standard.

The final decisions regarding any changes to the standards are made by OMB. To provide useful information to the Working Group in their ongoing deliberations and ultimately to OMB in reviewing the Working Group's final recommendations, responders should acquaint themselves with current NAICS [2] and NAPCS [3] structure and current classifications. A brief description of the NAICS and NAPCS classification processes, structures and uses, as well as a description of this Interagency Technical Working Group (ITWG) are included in the **SUPPLEMENTARY INFORMATION** section.

An effective response should be concise, and if summarizing or depending on published works, please include citations and electronic links to reference materials, studies, research, and other empirical data that are not widely available. Questions posed below are those the Working Group deemed most significant and relevant to the its recommendations. and do not necessarily reflect or represent the positions of OMB or the agencies participating in the Working Group. The questions have been sorted into broad categories for ease of review.

Any information obtained from this RFI is intended to be used by the Government on a non-attribution basis for planning and strategy development. OMB will not respond to individual submissions. A response to this RFI will not be viewed as a binding commitment to develop or pursue the project or ideas discussed. This RFI is not accepting applications for financial assistance or financial incentives.

FOR FURTHER INFORMATION CONTACT: For information about this request for comments, contact Anthony Nerino, Office of Management and Budget, 9215 New Executive Office Building, 725 17th St. NW, Washington, DC 20503, telephone (202) 395–1128.

SUPPLEMENTARY INFORMATION:

I. Background

The bioeconomy refers to a segment of the total economy utilizing and/or derived from biological resources, and includes manufacturing processes, technologies, products, and services. These may encompass, wholly or in part, industries and products including fuel, food, medicine, chemicals, and technology. Advances in biotechnology and biomanufacturing play a substantial role in addressing a range of issues including health, climate change, energy, food security, agriculture, labor opportunities and economic growth.

E.O. 14081 directed Federal agencies to foster innovative solutions in health, climate change, energy, food security, agriculture, supply chain resilience, and national and economic security. A critical component of this broad effort is an accurate measurement of the bioeconomy. Accurate data on bioeconomic manufacturing, industrial, and service activities may be used to assess growth across industrial sectors, inform Federal investments in research and development, guide private sector investments for scaling manufacturing efforts, assess emerging national and international economic opportunities, and foster the equitable distribution of health, food, and labor opportunities. Measuring U.S. industrial outputs and products provides critical information to a wide variety of private sector and Federal government stakeholders and requires accurate, reliable, independent measures that are also congruent with international measurements.

As part of its role as coordinator of the Federal statistical system under the

[2] North American Industrial Classification System—See *http://www.census.gov/naics.*

[3] North American Product Classification System—*See https://www.census.gov/naics/napcs.*

authority of the Paperwork Reduction Act of 1995 (44 U.S.C. 3504(e)) (PRA), OMB, through the Chief Statistician of the United States (CSOTUS), must ensure the efficiency and effectiveness of the system as well as the integrity, objectivity, impartiality, utility, and confidentiality of information collected for statistical purposes.[4] This statute also charges OMB with developing and overseeing the implementation of Government-wide principles, policies, standards, and guidelines concerning the development, presentation, and dissemination of statistical information.[5] OMB maintains a set of statistical policy directives to implement these requirements and the NAICS is required by Statistical Policy Directive #8, North American Industrial Classification System: Classification of Establishments.[6]

II. NAICS and NAPCS

Recommendations to the Working Group on potential revisions to the NAICS and NAPCS requires some insight into what these classification systems are and how they are used. The NAICS is used to generate statistics on the U.S. and North American Economy. Additional information and updates for 2022 can be found in the **Federal Register** Notice (86 FR 35350, pp 35350–35365, Doc# 2021–14249).[7]

NAICS: NAICS is a system for classifying establishments (individual business locations) by type of economic activity. Its purposes are: (1) to facilitate the collection, tabulation, presentation, and analysis of data relating to establishments, and (2) to promote uniformity and comparability in the presentation and analysis of statistical data describing the North American economy. Federal statistical agencies use NAICS to collect and/or publish data by industry. It is also widely used by State agencies, trade associations, private businesses, and other organizations.

Mexico's Instituto Nacional de Estadística y Geografía (INEGI), Statistics Canada, and the United States Office of Management and Budget (OMB), through the ECPC, collaborated on NAICS to make the industry statistics produced by the three countries comparable. NAICS is the first industry classification system developed in accordance with a single principle of aggregation (*i.e.,* producing units that use similar production processes should be grouped together in the classification). NAICS also reflects changes in technology and in the growth and diversification of services in recent decades. Industry statistics presented using NAICS are extensively comparable with statistics compiled according to the latest revision of the United Nation's International Standard Industrial Classification of All Economic Activities (ISIC, Revision 4).

For these three North American countries, NAICS provides a consistent framework for the collection, tabulation, presentation, and analysis of industry statistics used by government policy analysts, academics, researchers, the business community, and the public. Please note that NAICS is designed and maintained solely for statistical purposes to improve and keep current this Federal statistical standard. Consequently, although the classification may also be used for various nonstatistical purposes (*e.g.,* for administrative, regulatory, or taxation functions), the requirements of government agencies or private users that choose to use NAICS for nonstatistical purposes play no role in its development or revision.

Four principles that guide NAICS development are:

(1) NAICS is erected on a production-oriented conceptual framework. This means that producing units that use the same or similar production processes are grouped together in NAICS.

(2) NAICS gives special attention to developing production-oriented classifications for: (a) new and emerging industries, (b) service industries in general, and (c) industries engaged in the production of advanced technologies.

(3) Time series continuity is maintained to the extent possible.

(4) The system strives for compatibility with the two-digit level of the International Standard Industrial Classification of All Economic Activities (ISIC, Revision 4) of the United Nations.

NAICS uses a hierarchical structure to classify establishments from the broadest level to the most detailed level using the following format:

Sector	2-digit	Sectors represent the highest level of aggregation. There are 20 sectors in NAICS.
Subsector	3-digit	Subsectors represent the next, more detailed level of aggregation. There are 96 subsectors in NAICS 2022.
Industry Group	4-digit	Industry groups are more detailed than subsectors. There are 308 industry groups in NAICS 2022.
NAICS Industry	5-digit	NAICS industries, in most cases, represent the lowest level of three-country comparability. There are 698 five-digit industries in NAICS 2022.
Sector	2-digit	Sectors represent the highest level of aggregation. There are 20 sectors in NAICS.
National Industry	6-digit	National industries are the most detailed level and represent the national level detail. There are 1,012 national industries in NAICS United States 2022.

To ensure the accuracy, timeliness, and relevance of the classification, NAICS is reviewed every five years to determine what, if any, changes are required.

NAICS 2022 is the fifth revision since OMB adopted NAICS in 1997. In response to public proposals during the NAICS 2022 revision process, the ECPC considered the feasibility, value, and impact of including new industries for the bioeconomy. In its final set of recommendations to OMB, the ECPC did not include bioeconomy revisions in NAICS 2022, but indicated that NAPCS 2022 could be used to identify new products of the bioeconomy, such as biobased chemical inputs, and to inform future revision cycles on significant emerging industries of the bioeconomy.

The ECPC cites concerns regarding the availability of data for emerging bioeconomy industries due in part to disclosure considerations. ''However, the ECPC recognized that economic, statistical, and policy implications can arise when the industry classification system does not identify and account for important economic developments. The ECPC acknowledged that balancing the

[4] Paperwork Reduction Act 1995 44I.S.C. 3504(e)(1)—*See USCODE-2021-title44-chap35-subchapI-sec3504.pdf* (*govinfo.gov*).

[5] Paperwork Reduction Act 1995 44I.S.C. 3504(e)(3)—*See USCODE-2021-title44-chap35-subchapI-sec3504.pdf* (*govinfo.gov*).

[6] Statistical Policy Directive #8—*See 2021-27536.pdf* (*govinfo.gov*).

[7] NAICS *See*—**Federal Register**: North American Industry Classification System (NAICS) Updates for 2022; Update of Statistical Policy Directive No. 8, Standard Industrial Classification of Establishments; and Elimination of Statistical Policy Directive No. 9, Standard Industrial Classification of Enterprises.

costs of change against the potential for more accurate and relevant economic statistics will require significant input from data producers, data providers, and data users.'' [8] OMB accepted the recommendations of the ECPC, and in its final decision, OMB noted the ''importance of continued research and stakeholder engagement on [the bioeconomy] toward maintaining a relevant and objective statistical classification standard.'' [9]

NAPCS: NAPCS is a comprehensive, market- or demand-based, hierarchical classification system for products (goods and services) that: (a) is not industry-of-origin based, but can be linked to the NAICS industry structure, (b) is consistent across the three North American countries, and (c) promotes improvements in the identification and classification of service products across international classification systems, such as the Central Product Classification System of the United Nations.

NAPCS, a product classification system, and NAICS, an industry classification system, are independent but complementary. A product produced by multiple industries carries the same title, definition, and code in NAPCS, regardless of its industries of origin. Products can be linked to the industries that produce them, and industries can be linked to the products they produce.

The NAPCS structure comprises six hierarchical levels. At the highest level of the structure, there are 24 sections. Each section consists of subsections, divisions, groups, subgroups, and trilateral products.

NAPCS Level

Section—Two digits
Subsection—Three digits
Division—Five digits
Group—Seven digits
Subgroup—Nine digits
Trilateral Product—11 digits

NAPCS provides a comprehensive list of products adopted by the U.S., Canada, and Mexico, and will be incrementally implemented into economic statistics programs. These detailed product data will provide policymakers and the business community with the information needed to understand our ever-changing economies. NAPCS provides useful information to industry analysts to estimate market share for their firm or to investigate the growth of demand for the products of their firm with: (a) those for the industry as a whole, or (b) those that compete with or are closely associated with the products produced by the firm.[10]

III. ECPC

The ECPC is a standing committee responsible for the maintenance of NAICS and NAPCS. The ECPC follows a robust review process, inclusive of public comment, trilateral negotiations among the U.S., Canada and Mexico, and expert engagement across Federal agency staff.

The results of the ECPC's robust process are recommendations for proposed revisions to NAICS and NAPCS to CSOTUS. CSOTUS holds the responsibility of reviewing the recommendations and issuing final decisions for any revisions to the NAICS and NAPCS, per statutory authority in the PRA.

IV. Interagency Technical Working Group

The Office of the Chief Statistician of the United States (CSOTUS) convened an Interagency Technical Working Group on the Bioeconomy (Working Group) to provide recommendations on bioeconomy-related revisions for NAICS and NAPCS to the ECPC. Agency participation was solicited from the Interagency Council on Statistical Policy (ICSP). The ICSP comprises 13 Principal Statistical Agencies,[11] and 24 Chief Financial Officer (CFO) agencies [12] as well as agencies that are NAICS data users/stakeholders. The Working Group members were nominated by their agency Statistical Official. The Working Group is comprised of career staff from Federal agencies representing OMB, Department of Agriculture, Department of Energy, Small Business Administration, Bureau of Census, Bureau of Economic Analysis, Environmental Protection Agency, National Science Foundation, Bureau of Labor Statistics, and the Department of Defense.

The Working Group is charged with developing bioeconomy-related recommendations for revisions to NAICS and NAPCS that would promote accurate and reliable measurement of the bioeconomy, and maintain the integrity of federal statistical products. Upon completion, these recommendations will be provided to OMB and the ECPC. The ECPC will consider these recommendations in the development of proposed revisions for the 2027 NAICS and NAPCS.

V. Considerations for the Working Group

The Working Group, through OMB, is seeking input on how to best identify, classify, and measure bioeconomy manufacturing, technology, and products, including those that are primarily or exclusively: (a) biobased, (b) components of traditional manufacturing processes, and (c) nascent biobased processes and products. Importantly, input should include information on how particular industries or products are linked to the bioeconomy, and where appropriate and available, evidence to support your input should be provided. This will afford the Working Group the opportunity to use existing evidence to inform its recommendations.

To restate, the bioeconomy refers to a segment of the total economy utilizing and/or derived from biological resources, and includes manufacturing processes, technologies, products, and services. These may encompass, wholly or in part, industries and products including fuel, food, medicine, chemicals, and technology.[13]

Examples within these domains include: Energy (fuel, biomass), Agriculture (food, genetically modified plants), Health (medicine, genetic products), Manufacturing (biomaterials/chemicals, biobased industrial equipment), Technology (bio-related software, products) and Services (bio-based research and development, production, bio-based waste management, biobased resource management).

The Working Group will use these comments to inform their recommendations to OMB and ECPC as describes earlier.

V. Questions

1. What information and what high priority concerns should the Working Group consider in making these

[8] NAICS *See*—**Federal Register**: North American Industry Classification System (NAICS) Updates for 2022; Update of Statistical Policy Directive No. 8, Standard Industrial Classification of Establishments; and Elimination of Statistical Policy Directive No. 9, Standard Industrial Classification of Enterprises.

[9] Revision for 2022; Update of Statistical Policy Directive No. 8, North American Industry Classification System—*See https://www.govinfo.gov/content/pkg/FR-2021-12-21/pdf/2021-27536.pdf.*

[10] North American Product Classification System—*See https://www.census.gov/naics/napcs.*

[11] Paperwork Reduction Act 1995 44I.S.C. 3504(e)(3) *See* 44 U.S.C. 3504—Authority and functions of Director (*govregs.com*).

[12] *See* 31 U.S.C. 901: Establishment of agency Chief Financial Officers (*house.gov*).

[13] Executive Order 14081 of September 12, 2022 (Advancing Biotechnology and Biomanufacturing Innovation for a Sustainable, Safe, and Secure American Bioeconomy)—*See https://www.federalregister.gov/documents/2022/09/15/2022-20167/advancing-biotechnology-and-biomanufacturing-innovation-for-a-sustainable-safe-and-secure-american.*

recommendations for potential revisions to the NAICS and NAPCS that would enable characterization of the economic value of the U.S. bioeconomy?

2. Which quantitative economic indicators and processes are currently used to measure the contributions of the U.S. bioeconomy? Are these indicators reasonably accurate measures of the product components, scope, and value, of the bioeconomy; and, please explain why?

3. Which industries not currently measured as a unique classification in NAICS related to the bioeconomy should be considered? Similarly, which products not currently measured as a unique classification in NAPCS related to the bioeconomy should be considered? Please describe how a unique classification for such industry or product would meet the principles of NAICS and NAPCS. Please also include a description of the industry or product, with specific examples. Please also provide an explanation of how such industry or product would advance understanding of measuring the bioeconomy.

4. How might potential changes to the NAICS impact existing industry measurements, such as assessing changes in the economic output across current industries, time series measures, or data accuracy?

5. What role can the NAPCS fill in order to advance measurement of biomanufacturing and biotechnology?

6. Biobased processes and products that are embedded in traditional industries pose challenges for differentiation and measurement. Are there methodologies that can differentiate these bioeconomy processes from current manufacturing processes to enable measurement? If yes, please explain.

7. What potential bioeconomy measurement strategies might be considered other than revisions to and inclusion in the NAICS or NAPCS? For example, are there ways the Federal Government could better collect information to provide better measurement on biobased processes or products in current industries?

Karen A. Orvis,

Chief Statistician of the United States, Chief, Statistical and Science Policy Branch, Office of Information and Regulatory Affairs.

[FR Doc. 2023–08841 Filed 4–26–23; 8:45 am]

BILLING CODE 3110–01–P

NATIONAL AERONAUTICS AND SPACE ADMINISTRATION

[Notice: 23–036]

NASA Advisory Council; Technology, Innovation and Engineering Committee; Meeting

AGENCY: National Aeronautics and Space Administration.

ACTION: Notice of meeting.

SUMMARY: In accordance with the Federal Advisory Committee Act, as amended, the National Aeronautics and Space Administration (NASA) announces a meeting of the Technology, Innovation, and Engineering Committee of the NASA Advisory Council (NAC). This Committee reports to the NAC.

DATES: Tuesday, May 16, 2023, 9:00 a.m.–4:30 p.m. eastern time.

ADDRESSES: Meeting will be virtual. See dial-in and Webex information below under **SUPPLEMENTARY INFORMATION**.

FOR FURTHER INFORMATION CONTACT: Mr. Mike Green, Designated Federal Officer, Space Technology Mission Directorate, NASA Headquarters, Washington, DC 20546, via email at *g.m.green@nasa.gov* or (202) 358–4710.

SUPPLEMENTARY INFORMATION: This meeting will only be available by Webex or telephonically for members of the public. If dialing in via toll number, you must use a touch-tone phone to participate in this meeting. Any interested person may join via Webex at *https://nasaenterprise.webex.com,* the meeting number is 2764 623 6438, and the password is n@cTIE051623. The toll number to listen by phone is +1–415–527–5035. To avoid using the toll number, after joining the Webex meeting, select the audio connection option that says, ''Call Me'' and enter your phone number. If using the desktop or web app, check the ''Connect to audio without pressing 1 on my phone'' box to connect directly to the meeting.

Note: If dialing in, please mute your telephone.

The agenda for the meeting includes the following topics:

—Space Technology Mission Directorate (STMD) FY 2024 Budget Update
—NASA Small Business Innovation Research (SBIR) and Small Business Technology Transfer (STTR) Program Overview
—NASA Chief Technologist Introduction
—NASA Commercial Lunar Payload Services (CLPS) Program Update
—Early Career Initiative presentations from the NASA Johnson Space Center

It is imperative that this meeting be held on this day to accommodate the scheduling priorities of the key participants.

Patricia Rausch,

Advisory Committee Management Officer, National Aeronautics and Space Administration.

[FR Doc. 2023–08854 Filed 4–26–23; 8:45 am]

BILLING CODE 7510–13–P

POSTAL REGULATORY COMMISSION

[Docket Nos. MC2023–138 and CP2023–140]

New Postal Products

AGENCY: Postal Regulatory Commission.

ACTION: Notice.

SUMMARY: The Commission is noticing a recent Postal Service filing for the Commission's consideration concerning a negotiated service agreement. This notice informs the public of the filing, invites public comment, and takes other administrative steps.

DATES: *Comments are due:* May 1, 2023.

ADDRESSES: Submit comments electronically via the Commission's Filing Online system at *http://www.prc.gov.* Those who cannot submit comments electronically should contact the person identified in the **FOR FURTHER INFORMATION CONTACT** section by telephone for advice on filing alternatives.

FOR FURTHER INFORMATION CONTACT: David A. Trissell, General Counsel, at 202–789–6820.

SUPPLEMENTARY INFORMATION:

Table of Contents

I. Introduction
II. Docketed Proceeding(s)

I. Introduction

The Commission gives notice that the Postal Service filed request(s) for the Commission to consider matters related to negotiated service agreement(s). The request(s) may propose the addition or removal of a negotiated service agreement from the Market Dominant or the Competitive product list, or the modification of an existing product currently appearing on the Market Dominant or the Competitive product list.

Section II identifies the docket number(s) associated with each Postal Service request, the title of each Postal Service request, the request's acceptance date, and the authority cited by the Postal Service for each request. For each request, the Commission appoints an officer of the Commission to represent

the interests of the general public in the proceeding, pursuant to 39 U.S.C. 505 (Public Representative). Section II also establishes comment deadline(s) pertaining to each request.

The public portions of the Postal Service's request(s) can be accessed via the Commission's website (*http://www.prc.gov*). Non-public portions of the Postal Service's request(s), if any, can be accessed through compliance with the requirements of 39 CFR 3011.301.[1]

The Commission invites comments on whether the Postal Service's request(s) in the captioned docket(s) are consistent with the policies of title 39. For request(s) that the Postal Service states concern Market Dominant product(s), applicable statutory and regulatory requirements include 39 U.S.C. 3622, 39 U.S.C. 3642, 39 CFR part 3030, and 39 CFR part 3040, subpart B. For request(s) that the Postal Service states concern Competitive product(s), applicable statutory and regulatory requirements include 39 U.S.C. 3632, 39 U.S.C. 3633, 39 U.S.C. 3642, 39 CFR part 3035, and 39 CFR part 3040, subpart B. Comment deadline(s) for each request appear in section II.

II. Docketed Proceeding(s)

1. *Docket No(s).:* MC2023–138 and CP2023–140; *Filing Title:* USPS Request to Add Priority Mail Contract 779 to Competitive Product List and Notice of Filing Materials Under Seal; *Filing Acceptance Date:* April 21, 2023; *Filing Authority:* 39 U.S.C. 3642, 39 CFR 3040.130 through 3040.135, and 39 CFR 3035.105; *Public Representative:* Christopher C. Mohr; *Comments Due:* May 1, 2023.

This Notice will be published in the **Federal Register**.

Erica A. Barker,

Secretary.

[FR Doc. 2023–08948 Filed 4–26–23; 8:45 am]

BILLING CODE 7710–FW–P

[1] *See* Docket No. RM2018–3, Order Adopting Final Rules Relating to Non-Public Information, June 27, 2018, Attachment A at 19–22 (Order No. 4679).

POSTAL SERVICE

Product Change—Priority Mail Express, Priority Mail, First-Class Package Service, and Parcel Select Service Negotiated Service Agreement

AGENCY: Postal Service™.

ACTION: Notice.

SUMMARY: The Postal Service gives notice of filing a request with the Postal Regulatory Commission to add a domestic shipping services contract to the list of Negotiated Service Agreements in the Mail Classification Schedule's Competitive Products List.

DATES: *Date of required notice:* April 27, 2023.

FOR FURTHER INFORMATION CONTACT: Sean Robinson, 202–268–8405.

SUPPLEMENTARY INFORMATION: The United States Postal Service® hereby gives notice that, pursuant to 39 U.S.C. 3642 and 3632(b)(3), on April 14, 2023, it filed with the Postal Regulatory Commission a *USPS Request to Add Priority Mail Express, Priority Mail, First-Class Package Service, and Parcel Select Service Contract 115 to Competitive Product List.* Documents are available at *www.prc.gov,* Docket Nos. MC2023–135, CP2023–137.

Sarah Sullivan,

Attorney, Ethics & Legal Compliance.

[FR Doc. 2023–08837 Filed 4–26–23; 8:45 am]

BILLING CODE 7710–12–P

POSTAL SERVICE

Product Change—Priority Mail Negotiated Service Agreement

AGENCY: Postal Service™.

ACTION: Notice.

SUMMARY: The Postal Service gives notice of filing a request with the Postal Regulatory Commission to add a domestic shipping services contract to the list of Negotiated Service Agreements in the Mail Classification Schedule's Competitive Products List.

DATES: *Date of required notice:* April 27, 2023.

FOR FURTHER INFORMATION CONTACT: Sean Robinson, 202–268–8405.

SUPPLEMENTARY INFORMATION: The United States Postal Service® hereby gives notice that, pursuant to 39 U.S.C. 3642 and 3632(b)(3), on April 21, 2023, it filed with the Postal Regulatory Commission a *USPS Request to Add Priority Mail Contract 779 to Competitive Product List.* Documents are available at *www.prc.gov,* Docket Nos. MC2023–138, CP2023–140.

Sarah Sullivan,

Attorney, Ethics & Legal Compliance.

[FR Doc. 2023–08836 Filed 4–26–23; 8:45 am]

BILLING CODE 7710–12–P

POSTAL SERVICE

Product Change—Priority Mail Negotiated Service Agreement

AGENCY: Postal Service™.

ACTION: Notice.

SUMMARY: The Postal Service gives notice of filing a request with the Postal Regulatory Commission to add a domestic shipping services contract to the list of Negotiated Service Agreements in the Mail Classification Schedule's Competitive Products List.

DATES: *Date of required notice:* April 27, 2023.

FOR FURTHER INFORMATION CONTACT: Sean Robinson, 202–268–8405.

SUPPLEMENTARY INFORMATION: The United States Postal Service® hereby gives notice that, pursuant to 39 U.S.C. 3642 and 3632(b)(3), on April 19, 2023, it filed with the Postal Regulatory Commission a *USPS Request to Add Priority Mail Contract 778 to Competitive Product List.* Documents are available at *www.prc.gov,* Docket Nos. MC2023–137, CP2023–139.

Sarah Sullivan,

Attorney, Ethics & Legal Compliance.

[FR Doc. 2023–08835 Filed 4–26–23; 8:45 am]

BILLING CODE 7710–12–P

RAILROAD RETIREMENT BOARD

Actuarial Advisory Committee With Respect to the Railroad Retirement Account; Notice of Public Meeting

Notice is hereby given in accordance with Public Law 92–463 that the Actuarial Advisory Committee will hold a virtual meeting on May 10, 2023, at 12:00 p.m. (Central Daylight Time) on the conduct of the 2023 Annual Report Required by the Railroad Retirement Act of 1974 and the Railroad Retirement Solvency Act of 1983. The agenda for this meeting will include a discussion of the assumptions to be used in the Annual Report. A report containing recommended assumptions and the experience on which the recommendations are based will have been sent by the Chief Actuary to the Committee before the meeting.

The meeting will be open to the public. Persons wishing to submit written statements, make oral presentations, or attend the meeting should address their communications or notices to Patricia Pruitt (*Patricia.Pruitt@rrb.gov*) so that information on how to join the virtual meeting can be provided.

Dated: April 24, 2023.

Stephanie Hillyard,

Secretary to the Board.

[FR Doc. 2023–08878 Filed 4–26–23; 8:45 am]

BILLING CODE 7905–01–P

SECURITIES AND EXCHANGE COMMISSION

[SEC File No. 270–281, OMB Control No. 3235–0316]

Submission for OMB Review; Comment Request; Extension: Form N–3

Upon Written Request, Copies Available From: Securities and Exchange Commission, Office of FOIA Services, 100 F Street NE, Washington, DC 20549–2736

Notice is hereby given that, pursuant to the Paperwork Reduction Act of 1995 (44 U.S.C. 3501 *et seq.*), the Securities and Exchange Commission (the ''Commission'') has submitted to the Office of Management and Budget a request for extension of the previously approved collection of information discussed below.

The title for the collection of information is ''Form N–3 (17 CFR 239.17a and 274.11b) under the Securities Act of 1933 (15 U.S.C. 77) and under the Investment Company Act of 1940 (15 U.S.C. 80a), Registration Statement of Separate Accounts Organized as Management Investment Companies.'' Form N–3 is the form used by separate accounts offering variable annuity contracts which are organized as management investment companies to register under the Investment Company Act of 1940 (''Investment Company Act'') and/or to register their securities under the Securities Act of 1933 (''Securities Act''). Form N–3 is also the form used to file a registration statement under the Securities Act (and any amendments thereto) for variable annuity contracts funded by separate accounts which would be required to be registered under the Investment Company Act as management investment companies except for the exclusion provided by Section 3(c)(11) of the Investment Company Act (15 U.S.C. 80a–3(c)(11)). Section 5 of the Securities Act (15 U.S.C. 77e) requires the filing of a registration statement prior to the offer of securities to the public and that the statement be effective before any securities are sold, and Section 8 of the Investment Company Act (15 U.S.C. 80a–8) requires a separate account to register as an investment company.

Form N–3 also permits separate accounts offering variable annuity contracts which are organized as investment companies to provide investors with a prospectus and a statement of additional information covering essential information about the separate account when it makes an initial or additional offering of its securities. Section 5(b) of the Securities Act requires that investors be provided with a prospectus containing the information required in a registration statement prior to the sale or at the time of confirmation or delivery of the securities. The form also may be used by the Commission in its regulatory review, inspection, and policy-making roles.

Commission staff estimates that there will be 1 initial registration statement over the next three years and 6 insurer separate accounts that file post-effective amendments on Form N–3 per year, with an average of 3 investment options per post-effective amendment. The Commission further estimates that the hour burden for preparing and filing a post-effective amendment on Form N–3 is 157.55 hours per portfolio. The total annual hour burden for preparing and filing post-effective amendments is 2,836 hours (6 post-effective amendments × 3 investment options per post-effective amendment × 157.55 hours per portfolio). The estimated annual hour burden for preparing and filing initial registration statements is 309 hours. The total annual hour burden for Form N–3, therefore, is estimated to be 3,145 hours (2,836 hours + 309 hours). Respondents may rely on outside counsel or auditors in connection with the preparation and filing of Form N–3. Commission staff estimates that the annual cost burden associated with preparing and filing Form N–3 is $139,696.

The information collection requirements imposed by Form N–3 are mandatory. Responses to the collection of information will not be kept confidential. An agency may not conduct or sponsor, and a person is not required to respond to a collection of information unless it displays a currently valid control number.

The public may view background documentation for this information collection at the following website: *www.reginfo.gov.* Find this particular information collection by selecting ''Currently under 30-day Review—Open for Public Comments'' or by using the search function. Written comments and recommendations for the proposed information collection should be sent within 30 days of publication of this notice by May 30, 2023 to (i) *MBX.OMB.OIRA.SEC_desk_officer@omb.eop.gov* and (ii) David Bottom, Director/Chief Information Officer, Securities and Exchange Commission, c/o John Pezzullo, 100 F Street NE, Washington, DC 20549, or by sending an email to: *PRA_Mailbox@sec.gov.*

Dated: April 24, 2023.

Sherry R. Haywood,

Assistant Secretary.

[FR Doc. 2023–08879 Filed 4–26–23; 8:45 am]

BILLING CODE 8011–01–P

SECURITIES AND EXCHANGE COMMISSION

[Release No. 34–97348; File No. SR–ICC–2023–002]

Self-Regulatory Organizations; ICE Clear Credit LLC; Notice of Designation of Longer Period for Commission Action on Proposed Rule Relating to the Clearance of Additional Credit Default Swap Contracts

April 21, 2023.

On February 28, 2023, ICE Clear Credit LLC (''ICC'') filed with the Securities and Exchange Commission (''Commission'') the proposed rule change SR–ICC–2023–002 (''Proposed Rule Change'') pursuant to Section 19(b) of the Securities Exchange Act of 1934 (''Exchange Act'') [1] and Rule 19b–4 [2] thereunder a proposed rule change to clear additional credit default swap contracts.[3] The Proposed Rule Change was published for public comment in the **Federal Register** on March 15, 2023.[4] The Commission has not received comments regarding the proposal described in the Proposed Rule Change.

Section 19(b)(2) of the Exchange Act [5] provides that, within 45 days of the publication of notice of the filing of a proposed rule change, or within such longer period up to 90 days as the Commission may designate if it finds such longer period to be appropriate and publishes its reasons for so finding, or as to which the self-regulatory organization consents, the Commission shall either approve the proposed rule change, disapprove the proposed rule change, or institute proceedings to determine whether the proposed rule change should be disapproved. The 45th day after publication of the Notice of Filing is April 29, 2023. The Commission is extending this 45-day time period.

In order to provide the Commission with sufficient time to consider the Proposed Rule Change, the Commission

[1] 15 U.S.C. 78s(b)(1).

[2] 17 CFR 240.19b–4.

[3] *See* Notice of Filing *infra* note 4, 88 FR at 16042.

[4] Self-Regulatory Organizations; ICE Clear Credit LLC; Notice of Filing of Proposed Rule Change Relating to the Clearance of Additional Credit Default Swap Contracts; Exchange Act Release No. 97094 (Mar. 9, 2023), 88 FR 16042 (Mar. 15, 2023) (File No. SR–ICC–2023–002) (''Notice'').

[5] 15 U.S.C. 78s(b)(2).

finds that it is appropriate to designate a longer period within which to take action on the Proposed Rule Change.

Accordingly, the Commission, pursuant to Section 19(b)(2) of the Exchange Act,[6] designates June 13, 2023 as the date by which the Commission shall either approve, disapprove, or institute proceedings to determine whether to disapprove proposed rule change SR–ICC–2023–002.

For the Commission, by the Division of Trading and Markets, pursuant to delegated authority.[7]

Sherry R. Haywood,

Assistant Secretary.

[FR Doc. 2023–08829 Filed 4–26–23; 8:45 am]

BILLING CODE 8011–01–P

[6] *Id.*

[7] 17 CFR 200.30–3(a)(31).

SECURITIES AND EXCHANGE COMMISSION

[Release No. 34–97346; File No. SR–LTSE–2023–02]

Self-Regulatory Organizations; Long-Term Stock Exchange, Inc.; Notice of Filing and Immediate Effectiveness of a Proposed Rule Change To Extend the Term That Newly and Currently Listed Companies May Receive Capital Markets Solutions on a Complimentary Basis Under LTSE Rule 14.602

April 21, 2023.

Pursuant to Section 19(b)(1) of the Securities Exchange Act of 1934 (''Act''),[1] and Rule 19b–4 thereunder,[2] notice is hereby given that on April 12, 2023, Long-Term Stock Exchange, Inc. (''LTSE'' or the ''Exchange'') filed with the Securities and Exchange Commission (''Commission'') the proposed rule change as described in Items I and II below, which Items have been prepared by the self-regulatory organization. The Commission is publishing this notice to solicit comments on the proposed rule change from interested persons.

I. Self-Regulatory Organization's Statement of the Terms of Substance of the Proposed Rule Change

LTSE proposes to extend from one year, to three-years, the term that newly and currently listed Companies may receive Capital Markets Solutions on a complimentary basis under LTSE Rule 14.602.

The text of the proposed rule change is available at the Exchange's website at *https://longtermstockexchange.com/,* at the principal office of the Exchange, and at the Commission's Public Reference Room.

[1] 15 U.S.C. 78s(b)(1).

[2] 17 CFR 240.19b–4.

II. Self-Regulatory Organization's Statement on the Purpose of, and Statutory Basis for, the Proposed Rule Change

In its filing with the Commission, the self-regulatory organization included statements concerning the purpose of and basis for the proposed rule change and discussed any comments it received on the proposed rule change. The text of these statements may be examined at the places specified in Item IV below. The self-regulatory organization has prepared summaries, set forth in Sections A, B, and C below, of the most significant aspects of such statements.

A. Self-Regulatory Organization's Statement of the Purpose of, and Statutory Basis for, the Proposed Rule Change

1. Purpose

In March 2022, LTSE began offering complimentary Capital Markets Solutions to newly listed and currently listed Companies following the Commission's approval of relevant amendments to Rule 14.602.[3] Based on LTSE's experience with offering Capital Markets Solutions, as well as in response to changes in the competitive landscape and market conditions, the Exchange proposes to extend from one year, to a three-year term, the period that newly listed Companies and currently listed Companies may receive the complimentary Capital Markets Solutions under LTSE Rule 14.602. This proposed change impacts the duration for which Capital Markets Solutions are to be provided and does not otherwise impact the nature or substance of the offerings under LTSE Rule 14.602.

As described in the prior approval order by the Commission,[4] the Capital Markets Solutions has two components: (i) an Investor Alignment Solution, and (ii) the Long-Term Investor Platform (''LTIP''). The Investor Alignment Solution provides Companies with detailed institutional investor analytics and insights into investor behavior to enable them to evaluate the behaviors of select investors and provide them with a deeper understanding of the ESG landscape and their positioning. For each receiving Company, the Exchange's affiliate company, LTSE Services, Inc. (''LTSE Services'')[5] analyzes the ESG profile of institutional investors in order to understand and identify relevant sources of capital to aid the Company in honing and achieving strategic priorities. A highly-experienced, multi-disciplinary team is deployed to support this long-term governance and capital markets strategy. The Exchange believes that the Investor Alignment Solution furthers the Exchange's goal of facilitating long-term focus and value creation for companies and investors. The nature or substance of this offering under LTSE Rule 14.602 is not impacted by the proposed rule change.

The LTIP is a platform that provides listed Companies with a means to upload and effectively manage and utilize their registered shareholder data received from their transfer agent. For example, the LTIP allows Companies to more easily track, analyze and utilize registered shareholder data in support of their investor relations, strategic initiatives, board review and governance functions. Additionally, as part of the LTIP, LTSE Services will assist[6] Companies with methods of outreach to and education of existing or potential investors regarding the process for becoming a registered shareholder, including the need for investors to work with their broker-dealer to complete a submission to the DRS Profile System maintained by the DTC.[7]

Proposed Rule 14.602(b)(2)(A) would provide that within 90 days of listing on the Exchange, a Company has the option to request and commence receiving the Capital Markets Solutions on a complimentary basis for a three-year term. As is the case in the current rule text, the three-year term will begin from the date of first use of the Capital Markets Solutions by the newly-listed Company, subject to the 90-day period from the date of listing to request and begin receiving the service. The only

[3] *See* Securities Exchange Act Release No. 94465 (March 18, 2022), 87 FR 16800 (March 24, 2022) File No. SR–LTSE–2021–08.

[4] *Id.*

[5] As noted in the Commission's order approving LTSE as a national securities exchange, LTSE maintains a commercial relationship with LTSE Services to leverage the company's technological expertise to support the Exchange's software needs. *See* In the Matter of the Application of Long Term Stock Exchange, Inc.; for Registration as a National Securities Exchange; Findings, Opinion, and Order of the Commission, Securities Exchange Act Release No. 85828 (May 10, 2019), 84 FR 21841, 21842 (May 15, 2019). LTSE Services also provides communications and marketing services to the Exchange.

[6] The registered shareholder information in LTIP is proprietary to the Company and viewable only by the Company and its authorized agent.

[7] Any outreach to existing or potential investors is entirely at the discretion of the Company and will be conducted exclusively by the Company; no personnel from LTSE Services or LTSE will have any role in communicating with investors on behalf of the Company. The LTIP also will, based on customer demand, provide a means for the Company to communicate with registered shareholders who choose to participate on the Company's LTIP account.

proposed change in Rule 14.602(b)(2)(A) is changing the duration of the period during which a Company may receive the Capital Markets Solutions on a complimentary basis from one year to three years.

The Exchange is proposing an amendment to Rule 14.602(b)(2)(B), providing a currently listed Company that has already commenced receiving the services as of the effective date of this filing SR–LTSE–2023–02 the option to request to continue receiving such services on a complimentary basis for an additional two-year term. This two-year term will begin from the one-year anniversary of the date the Company initially commenced receiving the Capital Markets Solutions. The Exchange is also proposing to delete the following language: ''Within 90 days of the effectiveness of this rule,'' because it is no longer applicable. The Exchange is proposing no other substantive changes to Rule 14.602(b)(2)(B).

The Exchange believes extending the period for Companies to receive Capital Markets Solutions on a complimentary basis aligns with LTSE's objective of supporting long-term value creation for listed Companies and their investors. Additionally, by offering such services on a complimentary basis for a longer term—*i.e.,* three years—LTSE is able to enhance the value Companies receive by listing on the Exchange. However, no Company is required to use these services as a condition of initial or continued listing. All such services are optional for listed Companies and they may choose to cease receiving services at any point during the proposed three-year period. At the end of the proposed three-year term, Companies may choose to renew these services on a contractual basis with LTSE Services and pay for them in regular course, or discontinue them. If a Company chooses to discontinue the services, there would be no effect on the Company's continued listing on the Exchange. LTSE notes that no other Company will be required to pay higher fees as a result of the proposed amendments and represents that extending the term of these complimentary services will have no impact on the resources available for its regulatory programs. LTSE also represents that no confidential trading or regulatory information generated or received by the Exchange will be shared with LTSE Services or leveraged for the provision of its products and services.

2. Statutory Basis

The Exchange believes that the proposed rule change is consistent with the provisions of Section 6 of the Act,[8] in general, and furthers the objectives of Section 6(b)(4) of the Act,[9] in particular, in that it is designed to provide for the equitable allocation of reasonable dues, fees, and other charges among the Exchange's members and issuers and other persons using its facilities. The Exchange also believes that the proposed rule change is consistent with Section 6(b)(5) of the Act [10] in that it is not designed to permit unfair discrimination between customers, issuers, brokers, or dealers.

The Exchange believes that it is fair and reasonable to offer products and services to companies. The Exchange believes that the existing U.S. exchange listing market for operating companies is essentially a duopoly with the vast majority of operating companies listed on U.S. securities exchanges listing on the New York Stock Exchange (''NYSE'') or Nasdaq Stock Market LLC (''Nasdaq''). The Exchange faces competition from NYSE and Nasdaq as a new entrant into the exchange listing market as both offer complimentary services to newly and currently listed companies in order to attract and retain listings.[11] Similarly, the Exchange believes that offering such products and services to newly and currently listed Companies would enhance the value proposition for listing, allow the Exchange to more effectively attract companies to list on the Exchange and retain its current listings. Equally important, LTSE believes that the Capital Markets Services will support Companies in identifying investors who are aligned with their long-term business, vision and policies.

The Exchange also believes that to the extent the Exchange's listing program is successful, it will provide a competitive alternative, which will thereby benefit companies and investors, and remove impediments to and perfect the mechanism of a free and open market and a national market system, consistent with the protection of investors and the public interest. Other exchanges also acknowledge the competition in the market for listing services and they compete, in part, by offering products and services to companies. Like other exchanges, LTSE also believes that it is fair and reasonable to offer complimentary services to attract new listings and retain current listings as part of this competition.[12] For example, Nasdaq, through its affiliate Nasdaq Corporate Solutions, LLC, or a selected third-party, offers an ''Eligible New Listing'' or ''Eligible Switch'' access to complimentary services for at least three years.[13] Similarly, NYSE offers complimentary services to ''Eligible New Listings'' and ''Eligible Transfer Companies'' for a period of 48 calendar months.[14] As noted above, the proposed rule change would provide all current and newly LTSE-listed Companies the Capital Markets Solutions for three years.

LTSE believes extending the term that all newly listed and currently listed Companies receive Capital Markets Solutions on a complimentary basis is consistent with just and equitable principles of trade and the protection of investors and the public interest because it has the potential to enhance current and newly listed companies' engagement and alignment with shareholders for the purpose of long-term value creation. These services are also a reflection of the Exchange's differentiated listing standards, which are explicitly designed to promote long-term focus and value creation,[15] and are central to LTSE's mission of reducing short-termism in the capital markets.[16] Additionally, LTSE is not differentiating the complimentary services offered among listed Companies based on the number of shares outstanding or market capitalization; the Capital Markets Solutions are made available to all listed Companies for the same period of time.

[8] 15 U.S.C. 78f.

[9] 15 U.S.C. 78f(b)(4).

[10] 15 U.S.C. 78f(b)(5).

[11] *See,* Securities Exchange Act Release No. 90955 (January 19, 2021), 86 FR 7155, 7157 (January 26, 2021) (noting that ''Nasdaq faces competition in the market for listing services, and competes, in part, by offering valuable services to companies. Nasdaq believes that it is reasonable to offer complimentary services to attract and retain listings as part of this competition''). *See also,* Securities Exchange Act Release No. 93865 (December 23, 2021), 86 FR 74115, 74118 (December 29, 2021) (noting that, ''The NYSE faces competition in the market for listing services, and competes, in part, by offering valuable services to companies. The Exchange believes that it is reasonable to offer complimentary services to attract and retain listings as part of this competition.'').

[12] *Id.*

[13] *See* Nasdaq Listing Rule IM–5900–7(c) and (d). *See also* Securities Exchange Act Release No. 91318 (March 12, 2021), 86 FR 14774 (March 18, 2021) (order approving proposed Nasdaq rule change to modify and expand the package of complimentary services provided to Eligible Companies under IM–5900–7).

[14] *See* NYSE Listed Company Manual Section 907; *see also* Securities Exchange Act Release No. 94222 (February 10, 2022), 87 FR 8886 (February 16, 2022) (order approving proposed rule change to amend Section 907 of the Listed Company Manual regarding products and services being offered to eligible companies).

[15] *See* Policies and Principles noted in LTSE Rule 14.425.

[16] *See* Securities Exchange Act Release No. 86327 (July 8, 2019), 84 FR 33293 (July 12, 2019) File No. SR–LTSE–2019–01 (notice of filing of proposed rule change to adopt LTSE Rule 14.425).

Finally, the Exchange believes it is reasonable to balance its need to remain competitive with other listing venues, while at the same time ensuring adequate revenue to meet its regulatory responsibilities. The Exchange notes that no Company will be required to pay higher fees because of this proposal, and it represents that providing the proposed services will have no impact on the resources available for its regulatory programs.

B. Self-Regulatory Organization's Statement on Burden on Competition

The Exchange does not believe that the proposed rule change will result in any burden on competition that is not necessary or appropriate in furtherance of the purposes of the Act. To the contrary, and as discussed in the Statutory Basis section, LTSE believes that the proposed rule change will enhance competition by facilitating LTSE's listing program which will allow the Exchange to provide companies with another listing option, thereby promoting intermarket competition between exchanges in furtherance of the principles of Section 11A(a)(1) of the Act [17] in that it is designed to promote fair competition between exchange markets by offering a new listing market. As noted above, LTSE faces competition in the market for listing services, and aims to compete by offering valuable services to listed Companies. The proposed rule change reflects that competition, but does not impose any burden on the competition with other exchanges. Other exchanges also offer similar services to companies for similar time frames as this proposed rule change,[18] thereby increasing competition to the benefit of those companies and their stakeholders. Moreover, as a dual listing venue, LTSE expects to face competition from existing exchanges because companies have a choice to list their securities solely on a primary listing venue. Consequently, the degree to which LTSE's products and services could impose any burden on intermarket competition is extremely limited, and LTSE does not believe that such offerings would impose any burden on competing venues that is not necessary or appropriate in furtherance of the purposes of the Act.

LTSE also does not believe that the proposed rule change will result in any burden on intramarket competition since all currently listed Companies will be able to receive the Capital Markets Services for the proposed three-year term. Moreover, the extension of these complimentary services to three years does not remove the requirement under the existing rule that a Company requesting such services must do so within 90 days of listing on the Exchange. Consequently, LTSE does not believe that the proposal will impose any burden on intramarket competition that is not necessary or appropriate in furtherance of the purposes of the Act.

C. Self-Regulatory Organization's Statement on Comments on the Proposed Rule Change Received From Members, Participants, or Others

The Exchange has neither solicited nor received written comments on the proposed rule change.

III. Date of Effectiveness of the Proposed Rule Change and Timing for Commission Action

Because the foregoing proposed rule change does not: (i) significantly affect the protection of investors or the public interest; (ii) impose any significant burden on competition; and (iii) become operative for 30 days from the date on which it was filed, or such shorter time as the Commission may designate, it has become effective pursuant to Section 19(b)(3)(A)(iii) of the Act [19] and subparagraph (f)(6) of Rule 19b–4 thereunder.[20]

A proposed rule change filed pursuant to Rule 19b–4(f)(6) under the Act normally does not become operative for 30 days after the date of its filing. However, Rule 19b–4(f)(6)(iii) [21] permits the Commission to designate a shorter time if such action is consistent with the protection of investors and the public interest. The Exchange has requested that the Commission waive the 30-day operative delay so that the proposal may become operative immediately upon filing. The Exchange asserts that waiver of the operative delay would be consistent with the protection of investors and the public interest because it would allow the Exchange to immediately extend the term of services being provided to currently listed Companies and permit uninterrupted continuation of services. In addition, the Exchange states that extending the period for Companies to receive Capital Markets Solutions on a complimentary basis aligns with its objective of supporting long-term value creation for listed Companies and their investors. For these reasons, and because the proposal raises no novel legal or regulatory issues, the Commission believes that waiver of the 30-day operative delay is consistent with the protection of investors and the public interest. Accordingly, the Commission hereby waives the 30-day operative delay and designates the proposed rule change operative upon filing.[22]

At any time within 60 days of the filing of the proposed rule change, the Commission summarily may temporarily suspend such rule change if it appears to the Commission that such action is necessary or appropriate in the public interest, for the protection of investors, or otherwise in furtherance of the purposes of the Act.

IV. Solicitation of Comments

Interested persons are invited to submit written data, views and arguments concerning the foregoing, including whether the proposed rule change is consistent with the Act. Comments may be submitted by any of the following methods:

Electronic Comments

- Use the Commission's internet comment form (*https://www.sec.gov/rules/sro.shtml*); or
- Send an email to *rule-comments@sec.gov.* Please include File Number SR–LTSE–2023–02 on the subject line.

Paper Comments

- Send paper comments in triplicate to Secretary, Securities and Exchange Commission, 100 F Street NE, Washington, DC 20549–1090.

All submissions should refer to File Number SR–LTSE–2023–02. This file number should be included on the subject line if email is used. To help the Commission process and review your comments more efficiently, please use only one method. The Commission will post all comments on the Commission's internet website (*https://www.sec.gov/rules/sro.shtml*). Copies of the submission, all subsequent amendments, all written statements with respect to the proposed rule change that are filed with the Commission, and all written communications relating to the proposed rule change between the Commission and any person, other than

[17] 15 U.S.C. 78k–1(a)(1).

[18] *See* Nasdaq Listing Rule IM–5900–7 and NYSE Listed Company Manual Section 907. *See also* supra notes 11 and 12.

[19] 15 U.S.C. 78s(b)(3)(A)(iii).

[20] 17 CFR 240.19b–4(f)(6). In addition, Rule 19b–4(f)(6) requires a self-regulatory organization to give the Commission written notice of its intent to file the proposed rule change at least five business days prior to the date of filing of the proposed rule change, or such shorter time as designated by the Commission. The Exchange has satisfied this requirement.

[21] 17 CFR 240.19b–4(f)(6)(iii).

[22] For purposes only of waiving the 30-day operative delay, the Commission has also considered the proposed rule's impact on efficiency, competition, and capital formation. See 15 U.S.C. 78c(f).

those that may be withheld from the public in accordance with the provisions of 5 U.S.C. 552, will be available for website viewing and printing in the Commission's Public Reference Room, 100 F Street NE, Washington, DC 20549 on official business days between the hours of 10:00 a.m. and 3:00 p.m. Copies of the filing also will be available for inspection and copying at the principal office of the Exchange. Do not include personal identifiable information in submissions; you should submit only information that you wish to make available publicly. We may redact in part or withhold entirely from publication submitted material that is obscene or subject to copyright protection. All submissions should refer to File Number SR–LTSE–2023–02 and should be submitted on or before May 18, 2023.

For the Commission, by the Division of Trading and Markets, pursuant to delegated authority.[23]

Sherry R. Haywood,

Assistant Secretary.

[FR Doc. 2023–08828 Filed 4–26–23; 8:45 am]

BILLING CODE 8011–01–P

[23] 17 CFR 200.30–3(a)(12), (59).

SECURITIES AND EXCHANGE COMMISSION

[Release No. 34–97342; File No. SR–FICC–2023–003]

Self-Regulatory Organizations; Fixed Income Clearing Corporation; Order Granting Proposed Rule Change To Revise the Description of the Stressed Period Used To Calculate the Value-at-Risk Charge and Make Other Changes

April 21, 2023.

On February 17, 2023, the Fixed Income Clearing Corporation (''FICC'') filed with the Securities and Exchange Commission (''Commission'') the proposed rule change SR–FICC–2023–003 pursuant to Section 19(b)(1) of the Securities Exchange Act of 1934 (''Act'') [1] and Rule 19b–4 thereunder.[2] The proposed rule change was published for comment in the **Federal Register** on March 7, 2023.[3] The Commission has received no comments regarding the proposed rule change. For the reasons discussed below, the Commission is approving the proposed rule change.

[1] 15 U.S.C. 78s(b)(1).

[2] 17 CFR 240.19b–4.

[3] Securities Exchange Act Release No. 97001 (Mar. 1, 2023), 88 FR 14189 (Mar. 7, 2023) (File No. SR–FICC–2023–003) (''Notice'').

I. Description of the Proposed Rule Change

FICC operates two divisions: the Government Securities Division (''GSD'') and the Mortgage Backed Securities Division (''MBSD''). GSD provides trade comparison, netting, risk management, settlement, and central counterparty services for the U.S. Government securities market. MBSD provides the same services for the U.S. mortgage-backed securities market. GSD and MBSD maintain separate sets of rules, margin models, and clearing funds.

A key tool that FICC uses to manage its credit exposures to its members is the daily collection of margin from each member. A member's margin is designed to mitigate potential losses associated with liquidation of the member's portfolio in the event of that member's default. The aggregated amount of all GSD and MBSD members' margin constitutes the GSD Clearing Fund and MBSD Clearing Fund, which FICC would be able to access should a defaulted member's own margin be insufficient to satisfy losses to FICC caused by the liquidation of that member's portfolio. Each member's margin consists of a number of applicable components, including a the value-at-risk (''VaR'') charge (''VaR Charge'') designed to capture the potential market price risk associated with the securities in a member's portfolio. The VaR Charge is typically the largest component of a member's margin requirement. The VaR Charge is designed to cover FICC's projected liquidation losses with respect to a defaulted member's portfolio at a 99% confidence level.

FICC states that it has observed significant volatility in the U.S. government securities market due to tightening monetary policy, increasing inflation, and recession fears, and that this volatility has led to greater risk exposures for FICC.[4] FICC represents that, in order to mitigate the increased risk exposures, FICC has to quickly and timely respond to rapidly changing market conditions.[5] For example, in order to respond to rapidly changing market conditions, FICC states that it may need to quickly adjust the look-back period that FICC uses for purposes of calculating the VaR Charge with an appropriate stressed period, as needed, to enable FICC to calculate and collect adequate margin from members.[6]

Accordingly, FICC is proposing to amend the GSD Quantitative Risk Management (''QRM'') Methodology Document—GSD Initial Market Risk Margin Model (''GSD QRM Methodology Document'') [7] and the MBSD Methodology and Model Operations Document—MBSD Quantitative Risk Model (''MBSD QRM Methodology Document,'' [8] and collectively with the GSD QRM Methodology Document, the ''QRM Methodology Documents'') to revise the description of the stressed period used to calculate the VaR Charge in order to help FICC quickly and timely adjust the look-back period used for calculating the VaR Charge with an appropriate stressed period, as needed. FICC states that adjustments to the look-back period could affect the amount of the VaR Charge that members are assessed by either increasing or decreasing such charge to reflect the level of risk the activities of the members presented to FICC.[9] FICC is also proposing to amend the GSD QRM Methodology Document to clarify the language describing the parameters used to calculate the VaR Floor.[10] Finally, FICC is proposing to

[4] *See* Notice, *supra* note 3, 88 FR at 14189.

[5] *Id.*

[6] *Id.*

[7] FICC filed an excerpt of the GSD QRM Methodology Document showing the proposed changes as a confidential exhibit to this proposed rule change, pursuant to 17 CFR 240.24–b2. FICC originally filed the GSD QRM Methodology Document confidentially as part of a previous proposed rule change and advance notice approved by the Commission regarding FICC's GSD sensitivity VaR. *See* Securities Exchange Act Release Nos. 83362 (Jun. 1, 2018), 83 FR 26514 (Jun. 7, 2018) (SR–FICC–2018–001) and 83223 (May 11, 2018), 83 FR 23020 (May 17, 2018) (SR–FICC–2018–801). The GSD QRM Methodology Document has been subsequently amended. *See* Securities Exchange Act Release Nos. 85944 (May 24, 2019), 84 FR 25315 (May 31, 2019) (SR–FICC–2019–001), 90182 (Oct. 14, 2020), 85 FR 66630 (Oct. 20, 2020) (SR–FICC–2020–009), 93234 (Oct. 1, 2021), 86 FR 55891 (Oct. 7, 2021) (SR–FICC–2021–007), and 95605 (Aug. 25, 2022), 87 FR 53522 (Aug. 31, 2022) (SR–FICC–2022–005).

[8] FICC filed an excerpt of the MBSD QRM Methodology Document showing the proposed changes as a confidential exhibit to this proposed rule change, pursuant to 17 CFR 240.24–b2. FICC originally filed the MBSD QRM Methodology Document confidentially as part of a previous proposed rule change and advance notice approved by the Commission regarding FICC's MBSD sensitivity VaR. *See* Securities Exchange Act Release Nos. 79868 (Jan. 24, 2017), 82 FR 8780 (Jan. 30, 2017) (SR–FICC–2016–007) and 79843 (Jan. 19, 2017), 82 FR 8555 (Jan. 26, 2017) (SR–FICC–2016–801). The MBSD QRM Methodology Document has been subsequently amended. *See* Securities Exchange Act Release Nos. 85944 (May 24, 2019), 84 FR 25315 (May 31, 2019) (SR–FICC–2019–001), 90182 (Oct. 14, 2020), 85 FR 66630 (Oct. 20, 2020) (SR–FICC–2020–009), 92303 (Jun. 30, 2021), 86 FR 35854 (Jul. 7, 2021) (SR–FICC–2020–017) and 95070 (Jun. 8, 2022), 87 FR 36014 (Jun. 14, 2022) (SR–FICC–2022–002).

[9] *See* Notice, *supra* note 3, 88 FR at 14189.

[10] Capitalized terms used herein and not defined shall have the meaning assigned to such terms in the FICC's GSD Rulebook (''GSD Rules'') and MBSD Clearing Rules (''MBSD Rules''), *available at http://www.dtcc.com/legal/rules-and-procedures.aspx.*

amend the GSD QRM Methodology Document to make certain technical changes described in greater detail below.

A. Revising the Description of the Stressed Period Used To Calculate the VaR Charge

FICC calculates VaR Charge by using a methodology referred to as the sensitivity approach. The sensitivity approach allows FICC to adjust the look-back period that FICC uses for purposes of calculating the VaR Charge. In particular, the sensitivity approach leverages external vendor data [11] to incorporate a look-back period of 10 years, which allows the GSD and MBSD models to capture periods of historical volatility. In the event FICC observes that the 10-year look-back period does not contain a sufficient number of stressed market events, FICC will include an additional period of historically observed stressed market events to the 10-year look-back period.[12]

The QRM Methodology Documents currently describe the additional stressed period as a configurable continuous period (typically one year). The GSD QRM Methodology Document further specifies the duration of the stressed period as one-year of stressed market events. FICC states that it regularly reviews metrics from various assessments to ensure the GSD and MBSD models are performing as designed.

In order to provide FICC with more flexibility with respect to the inclusion of sufficient number of stressed market events in the look-back period so FICC can respond to rapidly changing market conditions more quickly and timely, FICC is proposing to eliminate this detailed description of the stressed period from the GSD QRM Methodology Document (in Sections 2.10.1 (The list of key parameters) and A4.5.16.1 (Stressed VaR Calculation)), as well as the MBSD QRM Methodology Document (Section 5.17.1 (Stressed VaR Calculation)), and replace it with a more general description. Specifically, the proposed new description of the stressed period would provide in the GSD QRM Methodology Document (Section A4.5.16.1) and the MBSD QRM Methodology Document (Section 5.17.1) that the ''stressed period'' shall be a period of time that FICC may add, in its sole discretion, to the 10-year historical look-back period that includes stressed market events that are not otherwise captured in the look-back period.

The proposed new description would also provide that a stressed period, if added to the look-back period, shall be no shorter than 6 months and no longer than 36 months, and comprised of either one continuous period specified by a start date and an end date or comprised of more than one non-continuous period. FICC states that it is currently contemplating changing the stressed period at GSD from one year to 1.5 years while keeping the current one-year stressed period at MBSD unchanged.[13]

In addition, the proposed new description would provide that, when determining whether it is necessary to add a stressed period to the 10-year historical look-back period (and the appropriate length of an added stressed period), FICC would review all relevant information available to it at the time of such determination, including, for example, (1) the nature of the stressed market events in the current 10-year historical look-back period, (2) backtesting coverage ratios, and (3) market volatility observed by FICC. Further, the proposed new description would provide that changes to the stressed period shall be approved through FICC's model governance process set forth in the Clearing Agency Model Risk Management Framework (''Framework''),[14] and any current stressed period shall be documented and published to FICC members at the time such stressed period becomes effective.[15]

FICC believes that having a more general description would enable FICC to adjust the stressed period more quickly and timely because the adjustment process, such as constructing a stressed period comprised of more than one year's historical data that may not be continuous,[16] would be more streamlined and not require a rule change.[17] By being able to quickly and timely make adjustments to the stressed period, FICC states that it would have the flexibility to respond to rapidly changing market conditions more quickly and timely, which would, in turn, help better ensure that FICC calculates and collects adequate margin from members and risk manages its credit exposures to its members.[18] The look-back period would continue to be tracked in the monthly model parameter report, pursuant to the QRM Methodology Documents, and any changes to the look-back period [19] would continue to be subject to the internal model governance process of the Depository Trust and Clearing Corporation (''DTCC''), as described in the Framework.[20]

FICC conducted an impact study for the period from January 2021 to October 2022 (''Impact Study''), which reviewed the overall impact of the contemplated change to the stressed period (*i.e.,* changing the current stressed period of one year (September 2008 to August 2009) to a stressed period of 1.5 years (January 2008 to June 2009) on the GSD VaR model backtesting coverage and VaR Charge amounts, as well as the effect on the GSD Members during the Impact Study period. The results of the Impact Study indicate that, if a stressed period of 1.5 years had been in place for GSD,[21] the GSD's rolling 12-month VaR model backtesting coverage ratio would have improved by 29 bps (from 98.52%

[11] FICC states that the sensitivity approach leverages external vendor expertise in supplying the market risk attributes, which would then be incorporated by FICC into the GSD and MBSD models to calculate the VaR Charge. Specifically, FICC sources security-level risk sensitivity data and relevant historical risk factor time series from an external vendor for all eligible securities. The sensitivity data is generated by a vendor based on its econometric, risk, and pricing models. *See* Notice, *supra* note 3, 88 FR at 14189–90.

[12] *See* Notice, *supra* note 3, 88 FR at 14190.

[13] *Id.*

[14] The Framework sets forth the model risk management practices that FICC and its affiliates The Depository Trust Company (''DTC'') and National Securities Clearing Corporation (''NSCC,'' and together with FICC and DTC, the ''Clearing Agencies'') follow to identify, measure, monitor, and manage the risks associated with the design, development, implementation, use, and validation of quantitative models. The Framework is filed as a rule of the Clearing Agencies. *See* Securities Exchange Act Release Nos. 81485 (Aug. 25, 2017), 82 FR 41433 (Aug. 31, 2017) (File Nos. SR–DTC–2017–008; SR–FICC–2017–014; SR–NSCC–2017–008), 88911 (May 20, 2020), 85 FR 31828 (May 27, 2020) (File Nos. SR–DTC–2020–008; SR–FICC–2020–004; SR–NSCC–2020–008), 92380 (Jul. 13, 2021), 86 FR 38140 (Jul. 19, 2021) (File No. SR–FICC–2021–006), 92381 (Jul. 13, 2021), 86 FR 38163 (Jul. 19, 2021) (File No. SR–NSCC–2021–008), 92379 (Jul. 13, 2021), 86 FR 38143 (Jul. 19, 2021) (File No. SR–DTC–2021–003), 94271 (Feb. 17, 2022), 87 FR 10411 (Feb. 24, 2022) (File No. SR–FICC–2022–001), 94272 (Feb. 17, 2022) 87 FR 10419 (Feb. 24, 2022) (File No. SR–NSCC–2022–001), and 94273 (Feb. 17, 2022), 87 FR 10395 (Feb. 24, 2022) (File No. SR–DTC–2022–001).

[15] *See* Notice, *supra* note 3, 88 FR at 14190.

[16] FICC believes constructing a longer than one-year stressed period, or a stressed period that may not be continuous, would enable FICC to (i) better cope with market volatility spikes by increasing the calibrated volatility level of the VaR models, *i.e.,* longer stressed periods generally result in higher calibrated volatility levels, and (ii) capture a sufficient number of stressed market events. *Id.*

[17] Pursuant to Section 806(e)(1) of Title VIII of the Dodd-Frank Wall Street Reform and Consumer Protection Act and Rule 19b–4(n)(1)(i) under the Act, if a change materially affects the nature or level of risks presented by FICC, then FICC is required to file an advance notice filing. 12 U.S.C. 5465(e)(1) and 17 CFR 240.19b–4(n)(1)(i).

[18] *See* Notice, *supra* note 3, 88 FR at 14190.

[19] The look-back period includes the stressed period, if any. *Id.*

[20] *See supra* note 14.

[21] As noted above, FICC states that it is currently contemplating changing the stressed period at GSD from one year to 1.5 years while keeping the current one-year stressed period at MBSD unchanged. *See* Notice, *supra* note 3, 88 FR at 14190.

to 98.81%) as of October 2022 and the associated VaR Charge increase for GSD would be approximately $387 million (or 2.1%) on average during that period.[22]

The Impact Study further indicated that the three GSD Members with the largest average daily VaR Charge increases in dollar amount during the Impact Study period would have had increases of approximately $43.7 million, $43.24 million, and $39.55 million, representing an average daily increase for such Members of 3.4%, 4.4%, and 2.8%, respectively. The three GSD Members with the largest average daily VaR Charge increases as a percentage of VaR Charges paid by such Members during the Impact Study period would have had an average daily increase of 16.6%, 15.7% and 12.7%, respectively, had the contemplated stressed period been in place.

The three GSD Members with the largest average daily VaR Charge decreases in dollar amount during the Impact Study period would have had decreases of approximately $8.59 million, $7.93 million, and $7.24 million representing an average daily decrease for such Members of 4.3%, 1.3%, and 2.9%, respectively. The three GSD Members with the largest average daily VaR Charge decreases as a percentage of VaR Charges paid by such Members during the Impact Study period would have had an average daily decrease of 4.3%, 4.0% and 3.4%, respectively, had the contemplated stressed period been in place.

B. Clarifying the VaR Floor Parameter Language

The VaR Charge is subject to a minimum amount (the ''VaR Floor'') that FICC employs as an alternative to the amount calculated by the VaR model for portfolios where the VaR Floor[23] is greater than the model-based charge amount. A VaR Floor addresses the risk that the VaR model may calculate too low a VaR Charge for certain portfolios where the VaR model applies substantial risk offsets among long and short positions in different classes of securities that have a high degree of historical correlation. Because this high degree of historical price correlation may not apply in future changing market conditions, FICC applies a VaR Floor to protect FICC against such risk in the event that FICC is required to liquidate a large securities portfolio in stressed market conditions.[24]

VaR Floor at GSD is determined by multiplying the absolute value of the sum of the Net Long Positions and Net Short Positions of Eligible Securities, grouped by product and remaining maturity, by a percentage designated by FICC from time to time for such group. Currently, the GSD Rules provide that for (i) U.S. Treasury and agency securities, such percentage shall be a fraction, no less than 10%, of the historical minimum volatility of a benchmark fixed income index (*i.e.,* haircut rate) for such group by product and remaining maturity and (ii) mortgage-backed securities, such percentage shall be a fixed percentage that is no less than 0.05%.[25] However, the GSD QRM Methodology Document specifies these percentages (referred to as floor parameters therein) for government bond and MBS Pool as simply 10% and 5 Bps, respectively.

To avoid inconsistency with the GSD Rules, FICC is proposing clarifying changes to the floor parameter language in Section 2.10.1 of the GSD QRM Methodology Document. Specifically, FICC is proposing to revise the description of the floor parameter for government bond by deleting the reference to 10% and adding language that state the parameter is a percentage as designated by FICC from time to time pursuant to the GSD Rules and applied to the haircut rate of the respective government bonds. Similarly, for the description of the floor parameter for MBS Pool, FICC is proposing to revise it by deleting the reference to 5 Bps and adding language that state the parameter is a percentage as designated by FICC from time to time pursuant to the GSD Rules.

In addition, FICC is proposing to add a sentence making it clear that the floor parameters are tracked in the monthly model parameter report and that any future changes to the floor parameters would be subject to DTCC's internal model governance process set forth in the Framework.[26]

Lastly, consistent with the proposed changes to the floor parameters described above, FICC is proposing to delete from the GSD QRM Methodology Document the language in Sections 3.2.2 (Calculation of haircut of Treasury and Agency bonds without sensitivity analytics data) and 3.5 (Total VaR, Core Charge and Standalone VaR) that references the floor parameters for government bond and MBS pool positions being tentatively set to 10% and 0.05%, respectively.

C. Technical Changes

FICC is proposing to make certain technical changes to the GSD QRM Methodology Document. Specifically, FICC proposes to clarify in Sections 1.1 (Purpose and scope), A4.5.16 (Stressed VaR), and A4.5.16.1 (Stressed VaR Calculation) of the GSD QRM Methodology Document that ''SVaR'' refers to sensitivity VaR and not stressed VaR. In addition, FICC is also proposing to fix typographical errors in Sections 2.10.1 (The list of key parameters) and A4.5.16.1 (Stressed VaR Calculation) of the GSD QRM Methodology Document.

II. Discussion and Commission Findings

Section 19(b)(2)(C) of the Act directs the Commission to approve a proposed rule change of a self-regulatory organization if it finds that such proposed rule change is consistent with the requirements of the Act and rules and regulations thereunder applicable to such organization. After careful consideration, the Commission finds that the proposed rule change is consistent with the requirements of the Act and the rules and regulations thereunder applicable to FICC.[27] In particular, the Commission finds that the proposed rule change is consistent with Sections 17A(b)(3)(F) and (b)(3)(I) of the Act,[28] as well as Rules 17Ad–22(e)(4) and (e)(6) thereunder.[29]

A. Consistency With Section 17A(b)(3)(F) of the Act

Section 17A(b)(3)(F) of the Act requires, in part, that the rules of a clearing agency be designed to, among other things, promote the prompt and accurate clearance and settlement of securities transactions and assure the safeguarding of securities and funds which are in the custody or control of the clearing agency or for which it is responsible.[30]

As described in Section I.A above, FICC proposes replacing the current detailed description of the stressed period in the QRM Methodology

[22] FICC filed a summary of the Impact Study as confidential Exhibit 3 to this proposed rule change. Exhibit 3 provides more granular data concerning these results, including comparisons of the GSD VaR model backtesting coverage ratios for the current stressed period against the contemplated 1.5 year stressed period on a monthly basis, as well as comparisons of member-level VaR Charge amounts under those two stressed periods. FICC requested confidential treatment of Exhibit 3 pursuant to 17 CFR 240.24–b2.

[23] *See* definition of ''VaR Charge'' in GSD Rule 1 (Definitions), *supra* note 10.

[24] *See* Securities Exchange Act Release Nos. 83362 (Jun. 1, 2018), 83 FR 26514 (Jun. 7, 2018) (SR–FICC–2018–001) and 83223 (May 11, 2018), 83 FR 23020 (May 17, 2018) (SR–FICC–2018–801).

[25] *See* definition of ''VaR Charge'' in GSD Rule 1 (Definitions), *supra* note 10.

[26] *See supra* note 14.

[27] 15 U.S.C. 78s(b)(2)(C).

[28] 15 U.S.C. 78q–1(b)(3)(F) and (b)(3)(I).

[29] 17 CFR 240.17Ad–22(e)(4)(i), (e)(6)(i), and (e)(6)(v).

[30] 15 U.S.C. 78q–1(b)(3)(F).

Documents with a more general description, so FICC would have the flexibility to quickly adjust the look-back period FICC uses for purposes of calculating the VaR Charge with an appropriate stressed period, as needed, to enable FICC to calculate and collect adequate margin from members. Specifically, the proposal would change the current description of the stressed period in the QRM Methodology Documents from a configurable continuous period that is typically one year to a continuous period, or more than one non-continuous period, that would be no shorter than 6 months and no longer than 36 months.

As described above in Section I.A and in the Notice, FICC has provided data demonstrating that if FICC had changed the current stressed period of one year (September 2008 to August 2009) to a stressed period of 1.5 years (January 2008 to June 2009), GSD's rolling 12-month VaR model backtesting coverage ratio would have increased from 98.52% to 98.81% during the period of January 2021 to October 2022.[31] The Commission has reviewed FICC's data and agrees that its results indicate that the proposed changes should help FICC generate margin amounts that more effectively cover its credit exposures than under the current rule.

Accordingly, the Commission believes that the proposed change to the description of the stressed period should provide FICC with more flexibility to quickly adjust the stressed period, which should enhance FICC's ability to collect margin that better reflects the risks and particular attributes of its members' portfolios during periods rapidly changing market conditions. For these reasons, the Commission believes that implementing this change should help ensure that, in the event of a member default, FICC's operation of its critical clearance and settlement services would not be disrupted because of insufficient financial resources. Accordingly, the Commission finds that the change to the description of the stressed period should help FICC to continue providing prompt and accurate clearance and settlement of securities transactions in the event of a member default, consistent with Section 17A(b)(3)(F) of the Act.

Moreover, as described above in Section I, in the event of a clearing member default, FICC would access the mutualized the Clearing Fund should a defaulted member's own margin be insufficient to satisfy losses to FICC caused by the liquidation of that member's portfolio. The proposed change to the description of the stressed period should help FICC collect sufficient margin from members, thereby limiting non-defaulting members' exposure to mutualized losses in the event of a member default. The Commission believes that by helping to limit the exposure of FICC's non-defaulting members to mutualized losses, the proposed changes should help FICC assure the safeguarding of securities and funds which are in its custody or control, consistent with Section 17A(b)(3)(F) of the Act.

In addition to the proposed changes to the stressed period, FICC proposes several technical and conforming changes, described above in Sections I.B and I.C, to enhance the clarity of the GSD QRM Methodology Document. For example, for consistency with the GSD Rules, FICC would clarify in the GSD QRM Methodology Document that the floor parameters used for the calculation of the VaR Floor would be specified in the GSD Rules, that those floor parameters would be tracked in the monthly model parameter report, and that any future changes to the floor parameters would be subject to DTCC's internal model governance process. The Commission believes that greater clarity of the GSD QRM Methodology Document should better enable FICC to effectively implement the document's provisions. Accordingly, the Commission believes that these proposed changes should better enable FICC to assess and collect sufficient margin from its members, thereby assuring the safeguarding of securities and funds that are in FICC's custody or control, consistent with Section 17A(b)(3)(F) of the Act.

B. Consistency With Rule 17Ad–22(e)(4) Under the Act

Rule 17Ad–22(e)(4)(i) under the Act requires a covered clearing agency[32] to establish, implement, maintain and enforce written policies and procedures reasonably designed to effectively identify, measure, monitor, and manage its credit exposures to participants and those exposures arising from its payment, clearing, and settlement processes by maintaining sufficient financial resources to cover its credit exposure to each participant fully with a high degree of confidence.[33]

As described in Section I.A above, FICC's proposal to change the description of the stressed period in the QRM Methodology Documents should enhance FICC's ability to calculate and collect sufficient margin from its members. For example, the results of FICC's Impact Study demonstrate that during the period of January 2021 to October 2022, GSD's rolling 12-month VaR model backtesting coverage ratio would have improved by 29 bps (from 98.52% to 98.81%) by increasing the look-back period to 1.5 years.[34] The added flexibility from the more general description of the stressed period under the proposal should also provide FICC with the ability to quickly adjust the stress period in response to rapidly changing market conditions, which in turn, should better enable FICC to risk manage its members' positions and collect sufficient margin to effectively cover FICC's credit exposures.

Because the foregoing proposed changes should better enable FICC to collect sufficient margin from members, the Commission believes that the proposed changes should enhance FICC's ability to maintain sufficient financial resources to cover its credit exposures to applicable member portfolios fully with a high degree of confidence, consistent with Rule 17Ad–22(e)(4)(i) under the Act.

C. Consistency With Rule 17Ad–22(e)(6) Under the Act

Rule 17Ad–22(e)(6)(i) under the Act requires a covered clearing agency to establish, implement, maintain, and enforce written policies and procedures reasonably designed to cover its credit exposures to its participants by establishing a risk-based margin system that, at a minimum, considers, and produces margin levels commensurate with, the risks and particular attributes of each relevant product, portfolio, and market.[35] Rule 17Ad–22(e)(6)(v) under the Act requires a covered clearing agency to establish, implement, maintain and enforce written policies and procedures reasonably designed to cover its credit exposures to its participants by establishing a risk-based margin system that, at a minimum, uses an appropriate method for measuring credit exposure that accounts for relevant product risk factors and portfolio effects across products.[36]

[31] *See* Notice, *supra* note 3, 88 FR at 14191.

[32] A ''covered clearing agency'' means, among other things, a clearing agency registered with the Commission under Section 17A of the Act (15 U.S.C. 78q–1 *et seq.*) that is designated systemically important by Financial Stability Oversight Council (''FSOC'') pursuant to the Clearing Supervision Act (12 U.S.C. 5461 *et seq.*). *See* 17 CFR 240.17Ad–22(a)(5) and (a)(6). Because FICC is a registered clearing agency with the Commission that has been designated systemically important by FSOC, FICC is a covered clearing agency.

[33] 17 CFR 240.17Ad–22(e)(4)(i).

[34] *See supra* note 22.

[35] 17 CFR 240.17Ad–22(e)(6)(i).

[36] 17 CFR 240.17Ad–22(e)(6)(v).

As described in Section I.A above, FICC's proposal to replace the current detailed description of the stressed period with a more general description should give FICC more flexibility to respond to rapidly changing market conditions more quickly because FICC would be able to make adjustments to the stressed period without a rule change. As a result, this flexibility should enable FICC to better risk manage its credit exposure by enhancing FICC's ability to calculate and collect margin commensurate with the risks and particular attributes of each member's portfolio.

For these reasons, the Commission believes that the proposed changes should help ensure that FICC produces margin levels commensurate with the risks and particular attributes of its members' portfolios by adding flexibility to parameters for the stressed period to help ensure that the look-back period captures a sufficient number of stressed market events, and allowing FICC to make timely adjustments to the stressed period in response to rapidly changing market conditions. Accordingly, the Commission believes that the proposed changes would enhance FICC's risk-based margin system to better enable FICC to cover its credit exposures to its members because the proposed changes consider the risks and particular attributes of the relevant products, portfolios, and markets, consistent with the requirements of Rule 17Ad–22(e)(6)(i).[37] Similarly, the Commission believes that the proposed changes are reasonably designed to cover FICC's credit exposures to its members because the proposed changes would enhance FICC's risk-based margin system using appropriate methods for measuring credit exposures that account for relevant product risk factors and portfolio effects, consistent with the requirements of Rule 17Ad–22(e)(6)(v).[38]

III. Conclusion

On the basis of the foregoing, the Commission finds that the proposed rule change is consistent with the requirements of the Act and in particular with the requirements of Section 17A of the Act[39] and the rules and regulations promulgated thereunder. *It is therefore ordered*, pursuant to Section 19(b)(2) of the Act[40] that proposed rule change SR–FICC–2023–003, be, and hereby are, *approved*.[41]

For the Commission, by the Division of Trading and Markets, pursuant to delegated authority.[42]

Sherry R. Haywood,

Assistant Secretary.

[FR Doc. 2023–08827 Filed 4–26–23; 8:45 am]

BILLING CODE 8011–01–P

[37] 17 CFR 240.17Ad–22(e)(6)(i).

[38] 17 CFR 240.17Ad–22(e)(6)(v).

[39] 15 U.S.C. 78q–1.

[40] 15 U.S.C. 78s(b)(2).

[41] In approving the proposed rule change, the Commission considered the proposals' impact on efficiency, competition, and capital formation. 15 U.S.C. 78c(f).

[42] 17 CFR 200.30–3(a)(12).

DEPARTMENT OF STATE

[Public Notice: 12062]

Notice of Determinations; Culturally Significant Objects Being Imported for Exhibition—Determinations: ''Edvard Munch: Trembling Earth'' Exhibition

SUMMARY: Notice is hereby given of the following determinations: I hereby determine that certain objects being imported from abroad pursuant to agreements with their foreign owners or custodians for temporary display in the exhibition ''Edvard Munch: Trembling Earth'' at the Sterling and Francine Clark Art Institute, Williamstown, Massachusetts, and at possible additional exhibitions or venues yet to be determined, are of cultural significance, and, further, that their temporary exhibition or display within the United States as aforementioned is in the national interest. I have ordered that Public Notice of these determinations be published in the **Federal Register**.

FOR FURTHER INFORMATION CONTACT: Elliot Chiu, Attorney-Adviser, Office of the Legal Adviser, U.S. Department of State (telephone: 202–632–6471; email: *section2459@state.gov*). The mailing address is U.S. Department of State, L/PD, 2200 C Street NW (SA–5), Suite 5H03, Washington, DC 20522–0505.

SUPPLEMENTARY INFORMATION: The foregoing determinations were made pursuant to the authority vested in me by the Act of October 19, 1965 (79 Stat. 985; 22 U.S.C. 2459), Executive Order 12047 of March 27, 1978, the Foreign Affairs Reform and Restructuring Act of 1998 (112 Stat. 2681, *et seq.;* 22 U.S.C. 6501 note, *et seq.*), Delegation of Authority No. 234 of October 1, 1999, Delegation of Authority No. 236–3 of August 28, 2000, and Delegation of Authority No. 523 of December 22, 2021.

Scott Weinhold,

Principal Deputy Assistant Secretary for Educational and Cultural Affairs, Bureau of Educational and Cultural Affairs, Department of State.

[FR Doc. 2023–08901 Filed 4–26–23; 8:45 am]

BILLING CODE 4710–05–P

TENNESSEE VALLEY AUTHORITY

Agency Information Collection Activities: Submission for OMB Review; Comment Request

AGENCY: Tennessee Valley Authority (TVA).

ACTION: 30-Day notice of submission of information collection reinstatement approval request to OMB.

SUMMARY: Tennessee Valley Authority (TVA) provides notice of submission of this information clearance request (ICR) to the Office of Management and Budget (OMB) for review and approval in accordance with the Paperwork Reduction Act of 1995 (PRA). The general public and other federal agencies are invited to comment. TVA previously published a 60-day notice of the proposed information collection reinstatement for public review February 22, 2023 and no comments were received.

DATES: The OMB will consider all written comments received on or before May 30, 2023.

ADDRESSES: Written comments for the proposed information collection reinstatement should be sent within 30 days of publication of this notice to *www.reginfo.gov/public/do/PRAMain.* Find this particular information collection by selecting ''Currently under 30-day Review—Open for Public Comments'' or by using the search function.

SUPPLEMENTARY INFORMATION:

Type of Request: Reinstatement, with minor modification, of a previously approved information collection for which approval has expired.

Title of Information Collection: Land Use Survey Questionnaire—Vicinity of Nuclear Power Plants.

OMB Control Number: 3316–0016.

Current Expiration Date: 01/30/2023.

Frequency of Use: Annually.

Type of Affected Public: Individuals or Households, farms and business and other for-profit.

Small Businesses or Organizations Affected: Yes.

Federal Budget Functional Category Code: 455.

Estimated Number of Annual Responses: 150.

Estimated Total Annual Burden Hours: 75.

Estimated Average Burden Hours per Response: 0.5.

Need For and Use of Information: This survey is used to locate, for monitoring purposes, rural residents, home gardens, and milk animals within a five-mile radius of a nuclear power plant. The monitoring program is a mandatory requirement of the Nuclear Regulatory Commission set out in the technical specifications when the plants were licensed. The ICR previously approved by OMB expired on January 31, 2023.

Rebecca L. Coffey,

Agency Records Officer.

[FR Doc. 2023–08831 Filed 4–26–23; 8:45 am]

BILLING CODE 8120–08–P

TENNESSEE VALLEY AUTHORITY

Agency Information Collection Activities: Submission for OMB Review; Comment Request

AGENCY: Tennessee Valley Authority (TVA).

ACTION: 30-Day notice of submission of information collection reinstatement approval request to OMB.

SUMMARY: Tennessee Valley Authority (TVA) provides notice of submission of this information clearance request (ICR) to the Office of Management and Budget (OMB) for review and approval in accordance with the Paperwork Reduction Act of 1995 (PRA). The general public and other federal agencies are invited to comment. TVA previously published a 60-day notice of the proposed information collection reinstatement for public review February 22, 2023 and no comments were received.

DATES: The OMB will consider all written comments received on or before May 30, 2023.

ADDRESSES: Written comments for the proposed information collection reinstatement should be sent within 30 days of publication of this notice to *www.reginfo.gov/public/do/PRAMain.* Find this particular information collection by selecting ''Currently under 30-day Review—Open for Public Comments'' or by using the search function.

SUPPLEMENTARY INFORMATION:

Type of Request: Reinstatement, with minor modification, of a previously approved information collection for which approval has expired.

Title of Information Collection: Employment Application.

OMB Control Number: 3316–0063.

Current Expiration Date: 4–30–2023.

Frequency of Use: On occasion.

Type of Affected Public: Individuals.

Small Businesses or Organizations Affected: No.

Federal Budget Functional Category Code: 455.

Estimated Number of Annual Responses: 14,475.

Estimated Total Annual Burden Hours: 3,185.

Estimated Average Burden Hours per Response: 0.2.

Need For and Use of Information: Applications for employment are needed to collect information on qualifications, suitability for employment, and eligibility for veteran's preference. The information is used to make comparative appraisals and to assist in selections. The affected public consists of individuals who apply for TVA employment.

Rebecca L. Coffey,

Agency Records Officer.

[FR Doc. 2023–08832 Filed 4–26–23; 8:45 am]

BILLING CODE 8120–08–P

DEPARTMENT OF TRANSPORTATION

Federal Railroad Administration

Regulations Governing Certain Positive Train Control System Outages

AGENCY: Federal Railroad Administration (FRA), Department of Transportation (DOT).

ACTION: Notice.

SUMMARY: The purpose of this notice is to inform the public about FRA's regulations that currently govern certain outages of positive train control (PTC) systems during, for example, infrastructure upgrades and capital projects. This notice also contains information about the process a railroad must follow to obtain FRA's approval before temporarily disabling its PTC system for such purposes.

FOR FURTHER INFORMATION CONTACT: For technical questions, please contact Gabe Neal, Staff Director, Signal, Train Control, and Crossings Division, telephone: 816–516–7168, email: *Gabe.Neal@dot.gov.* For legal questions, please contact Stephanie Anderson, Attorney Adviser, telephone: 202–834–0609, email: *Stephanie.Anderson@dot.gov.*

SUPPLEMENTARY INFORMATION: By law, PTC systems must govern operations on PTC-mandated main lines, which currently encompass approximately 58,000 route miles, and include Class I railroads' main lines over which poison- or toxic-by-inhalation hazardous materials are transported and any railroads' main lines over which intercity or commuter rail passenger transportation is regularly provided.[1]

Previously, FRA's regulations permitted railroads to temporarily disable PTC systems where necessary to perform PTC system repair or maintenance.[2] That temporary flexibility expired, by regulation, on December 31, 2022.[3] Under that temporary provision, railroads were required only to notify to FRA; seeking FRA's approval was not necessary.

FRA appreciates that several types of PTC systems can be upgraded seamlessly, without necessitating an interruption of PTC system service. FRA also recognizes, however, that in limited cases, even those types of PTC systems might experience temporary outages for a short period during certain infrastructure upgrades.[4] In addition, FRA understands that the design of certain PTC systems, including the Advanced Civil Speed Enforcement System II on the Northeast Corridor, may require more extended periods of outages to facilitate ongoing capital projects. FRA expects that, in such a case, a railroad would schedule the temporary disabling of its PTC system for the time posing the least risk to railroad safety and for the minimum time necessary to complete the capital project and recommission its PTC system.[5]

As noted above, 49 CFR 236.1029(g)(3) previously permitted railroads to temporarily disable their PTC systems, with just notification to FRA; however, that provision expired on December 31, 2022, and is therefore no longer available for railroads to utilize. Now, if a railroad needs to disable its PTC system temporarily for maintenance or upgrade purposes, a railroad must obtain FRA's approval under 49 CFR 236.1021, *Discontinuances, material modifications, and amendments,* before temporarily disabling its PTC system or

[1] Title 49 United States Code (U.S.C.) 20157; Title 49 Code of Federal Regulations (CFR) 236.1005(b), 236.1006(a). This requirement does not apply, however, to a railroad's controlling locomotives that are subject to either a temporary or permanent exception under 49 U.S.C. 20157(j)–(k) or 49 CFR 236.1006(b).

[2] 49 CFR 236.1029(g)(3).

[3] *Id.*

[4] For example, FRA is aware of multiple railroads' electrical infrastructure upgrade projects that involved disabling the PTC system for a maximum period of four hours.

[5] *See* 49 CFR 236.1029(g)(3)(ii), 236.1033(f).

initiating a PTC system service outage. To obtain FRA's approval in this context, a railroad must submit a request to amend its FRA-certified PTC system pursuant to 49 CFR 236.1021(m), which outlines the process, content requirements, and FRA decision deadline (*i.e.,* 45 days) for this specific type of request for amendment (RFA).

Under 49 CFR 236.1021(e), FRA's regulations provide that FRA will publish a notice in the **Federal Register** and invite public comment, if an RFA includes a request for approval of a material modification or discontinuance of a PTC system. During FRA's review of a railroad's RFA, FRA will consider any comments or data submitted within the timeline specified in the notice and to the extent practicable, without delaying implementation of valuable or necessary safety and functional modifications to a PTC system. *See* 49 CFR 236.1021; *see also* 49 CFR 236.1011(e).

In addition, 49 CFR 236.1021(f) specifies that FRA will review the RFA, including the proposed temporary outage, and determine whether granting the request is ''in the public interest and consistent with railroad safety, taking into consideration all changes in the method of operation and system functionalities, both within normal PTC system availability and in the case of a system failed state (unavailable).'' If FRA approves the railroad's request to amend its FRA-certified PTC system, involving a limited outage period, FRA may attach conditions to that approval, which may include, for example, the following types of conditions, among other reporting requirements:

(1) The host railroad and its applicable tenant railroads must comply with the operating rules specified in the host railroad's FRA-approved PTCSP that would otherwise apply when a PTC system is temporarily disabled;

(2) The host railroad shall make reasonable efforts to schedule the temporary disabling of its PTC system for times posing the least risk to railroad safety;

(3) The host railroad shall notify FRA (via *PTC.Correspondence@dot.gov*) and each applicable tenant railroad at least 7 days before the host railroad temporarily disables its PTC system. In its notification, the host railroad must include the exact date and period of time during which the PTC system will be disabled, and explain how that date and period of time pose the least risk to railroad safety;

(4) The host railroad shall notify all applicable train crews, including tenant railroads' train crews, about the PTC system outage, including in accordance with the host railroad's operating rules and practices, which may require, for example, such information to be provided via track bulletins, dispatcher bulletins, or special instructions;

(5) The host railroad shall place its PTC system back into service without undue delay, and the PTC system may not be disabled longer than the approved timeframe; and

(6) During the period in which the PTC system is temporarily disabled, the host railroad and its tenant railroads must comply with the operating restrictions under 49 CFR 236.1029(b), including the applicable speed limitations.

Please be advised that this notice focuses on outages resulting from infrastructure upgrades or capital projects and does not address all types of PTC system outages. Other provisions in FRA's PTC regulations may instead apply and govern, depending on the exact circumstances. For example, please see 49 CFR 236.1005(g) through (k) for the requirements and procedures associated with temporary rerouting for emergencies or planned maintenance. In addition, please see 49 CFR 236.1029(b), which outlines the requirements that apply when a railroad's PTC system experiences an *en route* failure, including a cut out or malfunction.

FRA remains available to provide technical assistance to railroads and other stakeholders and to advise about any railroad-specific scenarios that may arise. FRA appreciates railroads' commitment to operating their FRA-certified, interoperable PTC systems on PTC-mandated main lines, as generally required by law, outside these special, limited circumstances.

Issued in Washington, DC.

John Karl Alexy,

Associate Administrator for Railroad Safety, Chief Safety Officer.

[FR Doc. 2023–08839 Filed 4–26–23; 8:45 am]

BILLING CODE 4910–06–P

DEPARTMENT OF TRANSPORTATION

Maritime Administration

[Docket No. MARAD–2023–0087]

Coastwise-Qualified Launch Barges: 46 CFR 389.3(a) Notifications

AGENCY: Maritime Administration (MARAD), Department of Transportation (DOT).

ACTION: Notice and request for comments.

SUMMARY: To maximize the use of coastwise-qualified vessels, in January of each calendar year, MARAD requests owners and operators of coastwise-qualified launch barges or other interested parties to notify the Agency of their interest in, and provide certain information relating to, the transportation, installation, or launching of platform jackets. MARAD publishes the notifications as a resource to companies contemplating these operations on the outer continental shelf. The notifications should include information set forth in the Supplementary Information section below.

DATES: Submit comments on or before May 30, 2023.

ADDRESSES: You may submit comments identified by DOT Docket Number MARAD–2023–0087 by any of the following methods:

- *Website/Federal eRulemaking Portal:* Go to *http://www.regulations.gov.* Search ''MARAD–2023–0087'' and follow the instructions for submitting comments on the electronic docket site.
- *Mail or Hand Delivery:* Docket Management Facility, U.S. Department of Transportation, 1200 New Jersey Avenue SE, West Building, Room W12–140, Washington, DC 20590, between 9 a.m. and 5 p.m., Monday through Friday, except on Federal holidays.

Note: All submissions must include the agency name and docket number for this notice. All comments received will be posted without change to *http://www.regulations.gov* including any personal information provided.

Docket: For access to the docket to read comments received, go to *http://www.regulations.gov* and search using ''MARAD–2023–0087.''

FOR FURTHER INFORMATION CONTACT: Jennifer Meurer, U.S. Department of Transportation, Maritime Administration, 1200 New Jersey Avenue SE, Room W23–453, Washington, DC 20590. Telephone: (202) 731–6220. Email: *Jennifer.Meurer@dot.gov.*

SUPPLEMENTARY INFORMATION: Pursuant to 46 U.S.C. 55108, the Secretary of Transportation has the authority to adopt procedures that timely provide information that would maximize the use of coastwise-qualified vessels for the transportation of platform jackets between U.S. coastwise points and the outer continental shelf. This authority has been delegated to MARAD. The regulations promulgated under the authority of 46 U.S.C. 55108 and 46 CFR 389.3(a), require that MARAD publish a notice in the **Federal Register** requesting notification from owners, operators, or potential operators of coastwise-qualified launch barges, or

other interested parties, of: (1) their interest in participating in the transportation and, if needed, the launching or installation of offshore platform jackets; (2) the contact information for their company; and (3) the specifications of any currently owned or operated coastwise-qualified launch barges or plans to construct such a vessel. The notification should indicate that the vessel's certificate of documentation has a coastwise endorsement. The information provided in the notifications will be published at *http://MARAD.dot.gov.* 46 CFR 389.3(e).

Privacy Act

In accordance with 5 U.S.C. 553(c), MARAD solicits comments from owners and operators of coastwise-qualified launch barges to compile a list of vessels that could potentially be available to transport, and if necessary, launch or install platform jackets. All timely comments will be considered; however, to facilitate comment tracking, commenters should provide their name or the name of their organization. If comments contain proprietary or confidential information, commenters may contact the agency for alternate submission instructions. Anyone can search the electronic form of all comments received into any of our dockets by the name of the individual submitting the comment (or signing the comment, if submitted on behalf of an association, business, labor union, etc.). For information on DOT's compliance with the Privacy Act, please visit *https://www.transportation.gov/privacy.*

(Authority: 46 U.S.C. 55108, 49 CFR 1.93(a), 46 CFR 389.)

By Order of the Maritime Administrator.

T. Mitchell Hudson, Jr.,

Secretary, Maritime Administration.

[FR Doc. 2023–08910 Filed 4–26–23; 8:45 am]

BILLING CODE 4910–81–P

DEPARTMENT OF TRANSPORTATION

Regional Infrastructure Accelerator Demonstration Program

AGENCY: Build America Bureau, U.S. Department of Transportation (DOT).

ACTION: Notice of Funding Opportunity (NOFO).

SUMMARY: The Build America Bureau (the Bureau) is issuing this NOFO to solicit applications from eligible parties for $24 million in Regional Infrastructure Accelerator (RIA) grants. RIA grants assist entities in developing improved infrastructure priorities and financing strategies for the accelerated development of a project that is eligible for funding under the Transportation Infrastructure Finance and Innovation Act (TIFIA) Credit Program under Chapter 6 of Title 23, United States Code. These grants are intended to support RIAs that: (1) serve a defined geographic area; (2) act as a resource to qualified entities in the geographic area; and (3) demonstrate the effectiveness of the RIA to expedite the delivery of projects eligible for the TIFIA credit program. Projects are not required to apply for or receive TIFIA credit assistance to be eligible; however, applicants who are considering the appropriateness of innovative financing methods to accelerate the delivery of eligible projects are strongly encouraged to apply.

SUPPLEMENTARY INFORMATION: Each section of this notice contains information and instructions relevant to the application process for the RIA grants. All applicants should read this notice in its entirety so that they have the information they need to submit eligible and competitive applications.

Table of Contents

A. Program Description
B. Federal Award Information
C. Eligibility Information
D. Application and Submission Information
E. Application Review Information
F. Federal Award Administration Information
G. Federal Awarding Agency Contacts
H. Other Information

A. Program Description

1. *Background:* The Bureau is responsible for driving transportation infrastructure development projects in the United States through innovative financing programs. Its mission is to provide access to the Bureau's credit programs in a streamlined, expedient, and transparent manner. In accomplishing its mission, the Bureau also provides technical assistance and encourages innovative best practices in project planning, financing, delivery, and monitoring. The Bureau draws upon the full resources of DOT to best utilize the expertise of DOT's Operating Administrations while promoting a culture of innovation and customer service. Section 1441 of the FAST Act [1] authorized the Program. In 2021, the Bureau selected the first five Regional Infrastructure Accelerators: (1) Fresno Council of Governments, (2) Chicago Metropolitan Agency for Planning, (3) Northeast Ohio Areawide Coordinating Agency (4), San Diego Association of Governments, and (5) Pacific Northwest Economic Region. In 2022, five additional Regional Infrastructure Accelerators were selected: (1) Central Ohio Transit Authority (COTA), (2) Dona Ana County, New Mexico, (3) Panhandle Regional Planning Commission, Texas, (4) Resilient SR 37 Program, California and, (5) Suffolk County, New York Midway Crossing Project. The Consolidated Appropriations Act, 2022,[2] appropriated $12 million for the Program and the Consolidated Appropriations Act, 2023,[3] appropriated an additional $12 million for the Program, which are collectively the source of funding for this NOFO.

The intent of this Program is to demonstrate and evaluate the viability and effectiveness of a small number of accelerators in expediting the development and delivery of specific transportation projects within the geographic area of each RIA designated by the Bureau. It is the intent of the Bureau to expand the Program coverage building on the earlier designation of RIAs. Therefore, the Bureau continues to be keenly interested in testing several RIA models to address needs based on common transportation infrastructure make-up and challenges within regions, particularly those with less capacity or experience in using innovative financing and project delivery methods, and those supporting eligible entities that are likely to be first time users of the Bureau's credit programs, such as the TIFIA credit program. The Bureau plans to select between six and ten RIAs for awards under this program based on proposals submitted by eligible applicants in response to this notice. Ideally, when considering both the first and the second rounds of awards under this program, there will be a diversity of RIAs selected for awards based on geography (*e.g.,* rural, urban, disadvantaged community), organizational structure (*e.g.,* within a State or Metropolitan Planning Organization), operational business model and focus.

2. *Regional Designation:* For the purpose of this Program, the Bureau will consider regional designation as broadly defined in the following categories:

a. *State or Multi-State:* An RIA that serves one State or a group of State entities with common interest in transportation projects being delivered.

b. *Urban or Metropolitan Planning Organization (MPO):* An RIA that serves a local government or group of local jurisdictions with transportation functions within a metropolitan area.

[1] Public Law 114–94, 129 Stat. 1312, 1435 (Dec. 4, 2015).

[2] Public Law 117–103, div. L, tit. I, 136 Stat. 49, 699 (Mar. 15, 2022).

[3] Public Law 117–328, div. L, tit. I (Dec. 29, 2022).

For this Program, if the RIA serves MPOs sharing State boundaries, it would be considered under this category.

c. *Rural:* An RIA that serves a region of rural communities as defined in this notice. An RIA serving multiple rural communities across state lines would be considered under this category. To be considered a rural RIA, most of the projects listed in the proposal must meet the definition of rural in Section C.5 of this notice.

d. *Other:* Any proposal that includes multiple jurisdictions with shared priorities and interest, such as a river basin, transportation corridor, etc.

3. *Program Goals:* The primary intent for the Program is to establish regional infrastructure accelerators to assist entities in accelerating TIFIA-eligible projects through innovative financing strategies. This assistance can be in the form of any of the following, based on the needs of the project(s) that the applicant proposes to assist:

a. Project planning;

b. Studies and analysis, including feasibility, market analysis, project costs, cost-benefit analysis, value for money, public benefit, economic assessments, and environmental reviews;

c. Revenue forecasting, funding and financing options analyses, application of best practices, innovative financing/procurement, and public-private partnerships, where appropriate;

d. Preliminary engineering and design work;

e. Statutory and regulatory compliance analyses;

f. Evaluation of opportunities for private financing, project bundling and/or phasing;

g. Enhancement of rural project sponsors' capacity to use the TIFIA credit program and to the extent applicable, the RRIF credit program, PABs, and other innovative financing methods, helping to bundle projects across multiple smaller jurisdictions to create a project at a scale that is more appropriate for the Bureau's credit assistance, and pool the jurisdictions' resources to apply for TIFIA credit assistance and, to the extent applicable, RRIF credit assistance and PABs, as well as leveraging DOT's Rural Opportunities to Use Transportation for Economic Success (ROUTES) Initiatives' [4] products and offerings; and

h. Other direct, project-specific support as appropriate.

Funding, in the form of and pursuant to a cooperative agreement, will be provided for a period of two years, with an option for a third year for an RIA that meets or exceeds agreed-upon performance targets and subject to the availability of funding. Competitive proposals that demonstrate long-term self-sustainability will be given greater consideration. The Bureau intends to work closely with grant recipients in developing and, as applicable, financing projects within the RIA's geographic area.

4. *Changes from the FY 2022 NOFO:* This FY 2023 Regional Infrastructure Accelerator Demonstration Program NOFO updates the FY 2022 NOFO to further reflect this Administration's priorities for creating good-paying jobs, improving safety, applying transformative technology, and explicitly addressing climate change and advancing racial equity. Therefore, the Bureau added transit-oriented development (TOD) as an additional point of consideration under the Transformative Projects criterion to clarify how the long-term project outcomes should align with the Administration's priorities in a competitive application. While the Program is not exclusive to TOD projects, proposals to aid projects that incorporate (1) economic development and related infrastructure activities and (2) public infrastructure/joint development opportunities will be more competitive than those that do not. Applicants should refer to Section E of this NOFO for descriptions of the selection criteria, including the new Transformative Projects criterion. Additionally, this NOFO clarifies what would be required of the Applicant to receive a STRONG rating for evaluation Criteria, where applicable, as further described in Section E.1.

B. Federal Award Information

The Bureau hereby requests applications from all interested parties to result in the award of between six and ten cooperative agreement(s), each containing substantial involvement on the part of the Federal government in accordance with 31 U.S.C. 6305. The Bureau anticipates substantial involvement between it and the recipient during this Program, which will include:

- Technical assistance and guidance to the recipients;
- Close monitoring of performance;
- Involvement in technical decisions; and
- Participation in status meetings including kick off meeting and annual technical and budget reviews.

1. *Program Funding and Awards:*

a. Number of Awards: The Bureau intends to select between six and ten RIAs, based on the number and viability of applications.

b. Size of Award: A total of $24 million is available for this Program. The size of individual awards will be determined by the number of RIAs selected and the funding needed for each to meet the Program objectives. Depending on the strength of applications and total amount requested, the Bureau anticipates providing grants in the range of $2 million to $4 million to establish between six and ten new RIAs. However, the Bureau may make smaller or larger awards depending on the applications received.

2. *Funding Period:* The Bureau intends to award funds on a yearly basis for a base period of two years under a cooperative agreement. A third option year of funding may be provided subject to RIA performance and the availability of funds.

C. Eligibility Information

1. *Eligible Applicants:* To be selected as an RIA, an applicant must be an eligible applicant. An eligible applicant is: A U.S. public entity, including a state, multi-state or multi-jurisdictional group, municipality, county, a special purpose district or public authority with a transportation function including a port authority, a tribal government or consortium of tribal governments, MPO, regional transportation planning organization (RTPO), Regional Transportation Commission, or a political subdivision of a State or local government, or combination of two or more of the foregoing.

If more than one public entity is applying in a single proposal, one of the entities must be designated as the lead applicant. Such applicant will be authorized to negotiate and enter into a cooperative agreement with the Government on behalf of the entities, will be responsible for performance, and will be accountable for Federal funds. Applications will be accepted from a partnership between one or more eligible applicants and another U.S. party, such as a private entity, consulting or engineering firms, etc., as long as one of the eligible public entities is designated as the lead applicant and that entity will enter into the cooperative agreement, with the shared goal of establishing and operating the RIA. The location of all RIA application parties, their entire jurisdictions and all proposed projects must be located solely in the United States and its territories. Proposed projects and project sponsors must meet the eligibility requirements for TIFIA credit assistance as further defined in Chapter 3 of the Bureau's

[4] *https://www.transportation.gov/rural.*

Credit Program Guide (*https://www.transportation.gov/sites/buildamerica.dot.gov/files/2019-08/Bureau%20Credit%20Programs%20Guide_March_2017.pdf#page=29*). In addition, the Bureau will consider the extent to which an applicant demonstrates the capacity to accelerate projects eligible for the TIFIA credit program using innovative financing strategies, including but not limited to the TIFIA and RRIF credit programs, PABs, project bundling, and private investment. Further, the Bureau will consider applications from any RIA that was designated pursuant to the prior NOFO to the extent that funding is available, and only after giving primary consideration to applicants who have not received any funding under this Program.

2. *Cost sharing or Matching:* There is no requirement for cost sharing or matching the grant funds.

3. *Other:* For the purposes of this Program, the following terms apply:

a. *Rural Infrastructure Project:* Consistent with the definition of ''rural infrastructure project'' for the TIFIA credit program, ''rural'' for the purposes of this notice is defined as a surface transportation infrastructure project located outside of an urban area with a population greater than 150,000 individuals, as determined by the Bureau of the Census in the 2020 decennial Census (*https://www.census.gov/programs-surveys/geography/guidance/geo-areas/urban-rural.html*).

b. A proposed region whose geographic authority is in both an urban and a rural area will be designated as urban if the majority of the projects listed in the proposal are in urban areas. Conversely, a proposed region located in both an urban area and a rural area will be designated as rural if the majority of the projects listed in the proposal are in rural areas.

c. *Urban/Rural Project determination:* A project located in both an urban and a rural area will be designated as urban if less than ½ of the project's costs are spent in a rural area. If ⅔ or more of a project's costs are spent in a rural area, the project will be designated as rural. For projects where between ½ and ⅔ of their costs are in a rural area, the project will be designated as rural if the applicant demonstrates that ⅔ or more of the project's benefits accrue to users in rural areas; if the applicant does not make such demonstration, the project will be designated as urban.

D. Application and Submission Information

1. *Address to Request Application Package:* Applicants must submit all applications through *www.Grants.gov.* Instructions for submitting applications can be found at *https://www.transportation.gov/buildamerica/financing/tifia/regional-infrastructure-accelerators-program.*

2. *Content and Form of Application Submission:* The application must include the Standard Form 424 (Application for Federal Assistance), cover page, and the application narrative.

a. *Cover Page:* Each application should include a cover page that contains, at minimum, name of the applicant and sponsor, if applicable, the location; the region of designation; category of designation for which the applicant is to be considered; and RIA budget amount.

b. *Application Narrative:* The application narrative should follow the basic outline below to address the Program requirements and assist evaluators in locating relevant information.

Section	Section explained
(1) Applicant	See D.2.c(1).
(2) Description of Proposed Geographic/Jurisdictional Region.	See D.2.c(2).
(3) Accelerator Proposal	See D.2.c(3).
(4) Budget, Sources and Uses for Full Accelerator Funds.	See D.2.c(4).
(5) Selection Criteria	See D.2.c(5).

The application narrative should include the information necessary for the Bureau to determine that the applicant(s) proposed regional focus, the overall accelerator proposal, list of intended projects, budget, and other information satisfy the eligibility requirements set forth in this notice as described in Section C and to assess the selection criteria specified in Section E.1. To the extent practicable, applicants should provide supporting data and documentation in a form that is directly verifiable by the Bureau. The Bureau may ask any applicant to supplement data in its application but expects applications to be complete upon submission.

c. *Additional Application Requirements:* In addition to the information requested elsewhere in this notice, the proposal should include a table of contents, maps, and graphics, as appropriate, to make the information easier to review. The Bureau recommends that the proposal be prepared with standard formatting preferences (a single-spaced document, using a standard 12-point font such as Times New Roman, with 1-inch margins). The proposal narrative should not exceed 30 pages in length, excluding cover pages and table of contents. The only substantive portions that may exceed the 30-page limit are documents supporting assertions or conclusions made in the 30-page project narrative. If possible, applicants should provide website links to supporting documentation rather than copies of these supporting materials. If supporting documents are submitted, applicants should clearly identify within the project narrative the relevant portion of the project narrative that each supporting document supports. The Bureau recommends using appropriately descriptive file names (*e.g.,* ''Project Narrative,'' ''Maps,'' ''Memoranda of Understanding'' and ''Letters of Support,'' etc.) for all attachments.

(1) *Applicant:* This section of the narrative should include information describing the organizational structure and formal/informal relationships between parties associated with the RIA application. It should directly address the eligibility requirements discussed in section C.1 of this notice. The applicant should use this section to explain the organization's history, qualifications, and experience of key individuals who will be working in the proposed RIA. This section should also include descriptions of previous projects relevant to the RIA's activities envisioned in this notice that the organization or its individuals completed. The narrative should place the projects into a broader context of transportation infrastructure investments being pursued by the proposed RIA and its sponsors, and how it will benefit communities within the region.

(2) *Description of Proposed Geographic/Jurisdictional Region:* This portion of the narrative should precisely identify the geographic region, the jurisdictions, and the agencies the RIA would serve and identify which of the four categories of RIA identified in Section A.2 that this proposal falls under and explain why. The narrative should explain the commonalities and shared interests of parties in the proposed region as the rationale for establishing a region of this construct, along with the affiliations within the proposed region. Consistent with the Department's ROUTES Initiative (*https://www.transportation.gov/rural*), the Department encourages applicants to describe how activities proposed in their application would address the unique challenges facing rural transportation networks, regardless of

the geographic location of those activities.

(3) *Accelerator Proposal:* This section of the narrative should explain how the applicant(s) propose to establish the RIA and the concept of how it would operate and provide the project-specific services identified in Section A of this notice, along with a proposed timeline for establishing the RIA, with key milestones and suggested performance targets during its operational phase. The applicant should describe, in sufficient detail, the applicant's approach to identifying and building the pipeline of projects to be undertaken and how they will develop such projects utilizing their experience and expertise and identify an initial pipeline of projects that are eligible for TIFIA credit assistance and, to the extent applicable, RRIF credit assistance, PABs, and other innovative financing methods. The narrative should also contain a list of projects that the applicant(s) propose to assist under the RIA. This list, to the extent possible, should include, at a minimum:

- Project name and location;
- Project sponsor;
- Description;
- Bureau program most likely to apply (TIFIA, RRIF, PABs);
- Support activities the applicant envisions the RIA would provide
- Project costs; and
- Project timeline.

(4) *Budget, Sources, and Uses for Full Accelerator Funds:* The applicant should include a proposed financial plan and budget including the Federal grant amount requested, non-Federal matching funds, in-kind contributions, and other sources. The proposed plan should also include a list of activities and projects as well as all associated costs of the proposed RIA. For non-Federal matching funds, the application should identify the sources as well as supporting documentation indicating the degree to which those funds are committed and dates of their availability. If the applicant proposes that the RIA will reach a point of long-term self-sustainability, the narrative should include a description of how this would happen, and where the long-term funds would be generated.

(5) *Selection Criteria:* This section of the application should demonstrate how the application aligns with the criteria described in Section E.1 of this notice. The Bureau intends to select and designate RIA that demonstrate in their proposal the ability to effectively assist entities in developing improved infrastructure priorities and financing strategies for the accelerated development of one or more projects eligible for funding under the TIFIA program. DOT will consider the extent to which an RIA is likely to effectively promote investment in eligible projects, develop a pipeline of regional transportation projects, and result in the implementation of projects with innovative financing methods.

The Bureau encourages applicants to either address each criterion or expressly state that the project does not address the criterion. Applicants are not required to follow a specific format, but the outline suggested addresses each criterion separately and promotes a clear discussion that assists project evaluators. To minimize redundant information in the application, the Bureau encourages applicants to cross-reference from this section of their application to relevant substantive information in other sections of the application. The guidance in this section is about how the applicant should organize their application. Guidance describing how the Bureau will evaluate projects against the Selection Criteria is in Section E.1 of this notice. Applicants also should review that section before considering how to organize their application.

Executive Order 13858 directs the Executive Branch Departments and agencies to maximize the use of goods, products, and materials produced in the United States through the terms and conditions of Federal financial assistance awards. If selected for an award, grant recipients must be prepared to demonstrate how they will maximize the use of domestic goods, products, and materials, as applicable, in establishing and operating the RIA. Additionally, recipients should be prepared to demonstrate in their application how the RIA addresses the goals and priorities of the Department's strategic plan (*https://www.transportation.gov/dot-strategic-plan*). These include: (1) Safety, (2) Economic Strength and Global Competitiveness, (3) Climate and Sustainability, (4) Transformation, and (5) Organizational Excellence. These can include projects that: (1) Are consistent with the National Roadway Safety Strategy, (2) Improves access or provides economic growth opportunities for underserved, overburdened, or rural communities, (3) Considers climate change and sustainability impacts in its planning and construction, (4) Have innovative approaches or delivery methods, and (5) Support Organizational Excellence.

3. *Unique Entity Identifier (UEI) and System for Award Management (SAM):* Each applicant must: (1) be registered in SAM before submitting its application; (2) provide a valid UEI in its application; and (3) maintain an active SAM registration with current information at all times during which it has an active Federal award or an application or plan under consideration by a Federal awarding agency. The Department may not make an RIA grant to an applicant until the applicant has complied with all applicable UEI and SAM requirements and, if an applicant has not fully complied with the requirements by the time the Department is ready to make a grant, the Department may determine that the applicant is not qualified to receive a grant and use that determination as a basis for making a grant to another applicant.

4. *Submission Dates and Timelines:*

a. *Deadline:* Applications in response to this NOFO must be submitted through *Grants.gov* by 11:59 p.m. EST 30 days after publication. The *Grants.gov* ''Apply'' function will open on the date of publication. The Bureau may hold NOFO information session(s) before the due date.

To apply through *Grants.gov,* applicants must:

(1) Obtain a Unique Entity Identifier (UEI);

(2) Register with SAM at *www.sam.gov;* and

(3) Create a *Grants.gov* username and password; and

(4) The E-business Point of Contact (POC) at the applicant's organization must also respond to the registration email from *Grants.gov* and login at *Grants.gov* to authorize the POC as an Authorized Organization Representative (AOR). Please note that there can only be one AOR per organization.

Please note that the *Grants.gov* registration process usually takes 4–6 weeks to complete, and that the Department will not consider late applications that are the result of failure to register or comply with *Grants.gov* applicant requirements in a timely manner. For information and instruction on each of these processes, please see instructions a *https://www.grants.gov/web/grants/applicants/applicant-faqs.html.* If interested parties experience difficulties at any point during the registration or application process, please call the *Grants.gov* Customer Service Support Hotline at 1(800) 518–4726, Monday–Friday from 7:00 a.m. to 9:00 p.m. EST.

5. *Intergovernmental Review:* Applications under this NOFO are not subject to the State review under E.O. 12372.

6. *Funding Restrictions:* The DOT will not reimburse any pre-award costs or application preparation costs under this

proposed agreement. Construction of any project being contemplated or aided by the proposed RIA is not an allowable activity under this grant. All non-domestic travel must be approved in writing by the DOT designated agreement officer prior to incurring costs. Travel requirements under the cooperative agreement will be met using the most economical form of transportation available. If economy class transportation is not available, the request for payment vouchers must be submitted with justification for use of higher-class travel indicating dates, times, and flight numbers.

7. *Other Submission Requirements:*

a. *Submission Location:* Application must be submitted to *Grants.gov*.

b. *Consideration of Application:* Only applicants who comply with all submission deadlines described in this notice and submit applications through *Grants.gov* will be eligible for award. Applicants are strongly encouraged to make submissions in advance of the deadline.

c. *Civil Rights:* Applications should demonstrate that the recipient has a plan for compliance with civil rights obligations and nondiscrimination laws, including Title VI of the Civil Rights Act of 1964 and implementing regulations (49 CFR 21), the Americans with Disabilities Act of 1990 (ADA), and Section 504 of the Rehabilitation Act, and accompanying regulations. This may include, as applicable, providing a Title VI plan, community participation plan, and other information about the communities that will be benefited and impacted by the project. The Department's and DOT Offices of Civil Rights may provide resources and technical assistance to recipients to ensure full and sustainable compliance with Federal civil rights requirements.

d. *Late Applications:* Applicants experiencing technical issues with *Grants.gov* that are beyond the applicant's control must contact *RIA@dot.gov* prior to the application deadline with the username of the registrant and details of the technical issue experienced. The applicant must provide:

- Details of the technical issue experienced;
- Screen capture(s) of the technical issues experienced along with corresponding
- *Grants.gov* ''Grant tracking number'';
- The ''Legal Business Name'' for the applicant that was provided in the SF–424;
- The AOR name submitted in the SF–424;
- The UEI number associated with the application; and
- The *Grants.gov* Help Desk Tracking Number.

To ensure a fair competition of limited discretionary funds, the following conditions are not valid reasons to permit late submissions: (1) failure to complete the registration process before the deadline; (2) failure to follow *Grants.gov* instructions on how to register and apply as posted on its website; (3) failure to follow all the instructions in this notice of funding opportunity; and (4) technical issues experienced with the applicant's computer or information technology environment. After the Department reviews all information submitted and contacts the *Grants.gov* Help Desk to validate reported technical issues, USDOT staff will contact late applicants to approve or deny a request to submit a late application through *Grants.gov*. If the reported technical issues cannot be validated, late applications will be rejected as untimely.

E. Application Review Information

1. *Criteria:* This section specifies the criteria that the Bureau will use to evaluate and award applications for Program grants. The criteria incorporate statutory eligibility requirements. For each proposed RIA, the Bureau will review the application for the criteria described in this section. The Bureau does not consider any criterion more important than the others.

The Bureau does not consider cost sharing as an independent criterion, and proposed cost sharing is considered in an application's merit evaluation only to the extent it is relevant to the criteria enumerated below in sections E.1.a–k, including Partnerships, Business Model, Readiness, Value, Equity and Accessibility, and Self-Sustainability.

a. *Experience/Qualifications:* The Bureau will assess whether and to what extent the applicant(s):

- Possess the ability to evaluate and promote innovative financing methods for local projects including the use of TIFIA and RRIF and other Federal assistance programs where applicable;
- Possess the ability to provide technical assistance on best practices with respect to financing projects;
- Have experience in increasing transparency with respect to infrastructure project analysis and using innovative financing for public infrastructure projects;
- Have experience in deploying predevelopment capital programs designed to facilitate the creation of a pipeline of infrastructure projects available for investment;
- Have a history of successfully bundling smaller-scale and rural projects into larger proposals that may be more attractive for private investment;
- Have demonstrated success in reducing transaction costs for public project sponsors;
- Demonstrate the capacity to accelerate projects eligible for the TIFIA credit program through the use of innovative financing strategies such as the TIFIA and RRIF credit programs, and PABs, but also other strategies such as project bundling, grant anticipation revenue vehicles, and incorporating private capital;
- Have experience in the development of project financial plans, including developing capital structures and identifying funding and financing sources, as well as a demonstrated track record for achieving financial close; and
- Have experience in working with private sector project sponsors and disadvantaged communities, including but not limited to rural and low resources communities, as well as working on revitalization projects.

An applicant that demonstrates substantial experience of 10 years or more in the development and delivery of projects, including the use of alternative delivery methods such as design-build and/or public-private partnerships as related to the items above, and innovative financing particularly the use of TIFIA, RRIF, or PABs will receive a STRONG rating in this criterion. Those who demonstrate between 5 and 9 years or more in the development and delivery of projects will receive a MODERATE rating in this category and those who demonstrate less than 5 years of experience in the development and delivery of projects will received a MARGINAL in this rating category.

b. *Partnerships:* The Bureau will consider the extent to which applicant(s) demonstrate strong collaboration among a broad range of stakeholders in the proposed geographic area of the RIA. Applications with strong partnerships typically involve multiple partners in project development, funding, and finance. The Bureau will consider applicants that partner with State, local, and private entities for the development, funding, financing, and delivery of transportation projects to have strong partnerships. Evaluators will also consider the relationship of the RIA with its constituencies and authorities granted by them. The Bureau will assess the ability of the proposed RIA to develop projects quickly and effectively by having the support of its members and

working across jurisdictions. An applicant that can demonstrate effective partnerships with the public sector, the private sector, and academic entities will receive a STRONG rating in this criterion. Partnerships that include participation in other Federal technical assistance and capacity building programs as part of the Thriving Communities Network, which includes DOT and HUD's Thriving Communities Programs, USDA's Rural Partners Network, and the Department of Commerce Economic Recovery Corps (*https://www.transportation.gov/federal-interagency-thriving-communities-network*) will receive a STRONG rating. An applicant that can demonstrate an effective partnership with at least one of the aforementioned entities (public, private, academic) will receive a MODERATE rating in this criterion and those who cannot demonstrate any partnerships will receive a MARGINAL rating. For some best practices on establishing partnerships, please see DOT's Promising Practices for Meaningful Public Involvement in Transportation Decision-Making at *https://www.transportation.gov/priorities/equity/promising-practices-meaningful-public-involvement-transportation-decision-making.*

c. *Business Model:* The Bureau will assess the thoroughness, viability, and efficiency that the applicant(s) can establish the RIA, commence operations, and deliver project-specific outcomes. In conducting this assessment, evaluators will consider:

- The effort, cost, and actions necessary to initially establish the proposed RIA, including workspaces, fixed and variable costs, staffing, and the development of relationships necessary to function effectively in the proposed region.
- How the proposed RIA will operate once established, including costs, organization, efficiency, availability of the technical expertise and resources needed to accelerate project delivery, work plan, and time required to achieve operational status.

An applicant that can demonstrate the ability to stand up the RIA and achieve operations status within 6 months of executing a cooperative agreement will receive a STRONG rating in this criterion. Those who can demonstrate the ability to begin operations within 9 months will receive a MODERATE rating in this criterion and those who cannot demonstrate that the RIA will be operational within 9 months will receive a MARGINAL.

d. *Pipeline:* The Bureau will consider the proposed pipeline of projects and assess whether and to what extent they are likely to be eligible projects and appropriate for development activities as set forth in this notice. The proposed pipeline must include one or more projects likely to be eligible for TIFIA credit assistance. In evaluating this criterion, the Bureau will consider the number of eligible projects in the pipeline, the degree of local/regional support of the projects, and the project status and timeline as they relate to the likelihood the RIA can impact the project during the performance period of the cooperative agreement. Evaluators will also assess the degree to which the skills/experience of the applicant(s) are appropriate for the proposed projects. The Bureau will also evaluate the viability and proposed approach the applicant(s) have developed for attracting new projects into the RIA's pipeline of projects and how they propose to assist and monitor the development of those projects. An applicant that can demonstrate one or more projects in their pipeline that are likely eligible for TIFIA credit assistance, provide at least two letters indicating the degree of local/regional support for the projects and demonstrate a timeline that makes receipt of TIFIA credit assistance likely within the RIA performance period will receive a STRONG rating in this criterion. Those who can demonstrate at least one or more projects in their pipeline that are likely eligible for TIFIA credit assistance and provide at least one letter indicating the degree of local/regional support for the project(s), but whose likelihood of receipt of TIFIA credit assistance is not within the RIA performance period will receive a MODERATE rating in this criterion. Those who can demonstrate at least one or more projects in their pipeline that are likely eligible for TIFIA credit assistance but cannot provide any documentation indicating the degree of local/regional support for the project(s) or any likelihood of receipt of TIFIA credit assistance at any point during the RIA performance period will receive a MARGINAL rating.

e. *Readiness:* The Bureau will consider the extent to which the proposed RIA is prepared to commence operations and begin achieving project-specific results. Evaluators will also assess the viability of the proposed budget as it relates to the establishment and successful operations of the RIA as proposed. In considering this criterion, evaluators will also determine the likelihood that proposed milestones will be subject to delay and/or cost overruns and the risk that key milestones might be missed due to internal or external factors. Evaluators will also consider the readiness of the proposed RIA to commence operations, including but not limited to:

- Availability of facilities and equipment necessary to function;
- Existing governance structure as compared to proposed future structure; and
- Ability of existing relationships to rapidly deliver results.

An applicant that can demonstrate an effective plan to commence operations in at least the three aforementioned categories will receive a STRONG rating in this criterion. Those who can demonstrate an effective plan to commence operations in at least two will receive a MODERATE and those who cannot demonstrate an effective plan to commence operations in any of the above three categories will receive a MARGINAL rating.

f. *Underserved Communities:* In support of Executive Order 13985, *Advancing Racial Equity and Support for Underserved Communities Through the Federal Government* (86 FR 7009), the Department encourages applicants to consider how the project will address the challenges faced by individuals and underserved communities, including rural areas and other areas of persistent poverty.

Where applicable, the Bureau will evaluate the degree to which the proposal can support individual rural project sponsors. The Bureau will consider opportunities proposed to overcome common barriers to using TIFIA and RRIF credit assistance and other innovative financing methods for rural project sponsors, such as project size or type, financial or institutional capabilities, and other issues. Consistent with the Department's ROUTES Initiative (*https://www.transportation.gov/rural*), the Department recognizes that rural transportation networks face unique challenges. To the extent that those challenges are reflected in the merit criteria listed in this section, the Department will consider how the activities proposed in the application will address those challenges, regardless of the geographic location of those activities. This can include delivering innovative technical assistance and leveraging the DOT ROUTES Initiative to provide user-friendly information and other assistance to rural project sponsors. An applicant that can demonstrate an effective plan to support a rural project sponsor in overcoming common barriers to using federal credit assistance and innovative finance methods in at least one proposed project will receive a STRONG rating in this criterion. An applicant that can

demonstrate a plan to support rural project sponsors who are not immediately in their pipeline will receive a MODERATE rating in this criterion and those who cannot demonstrate a plan to support rural sponsors will receive a MARGINAL rating.

g. *Self-Sustainability:* The Bureau will consider whether and to what extent the proposed RIA will achieve self-sustainability during the proposed award's 2-year base period of performance. If a proposed RIA does not anticipate achieving self-sustainability, the Bureau will evaluate the extent to which the execution of a cooperative agreement for the RIA might deliver long-term benefits as the result of projects delivered during the 2-year base funding period.

An applicant that can demonstrate a model of self-sustainability and continued benefits beyond the base 2-year period of Federal funding will receive a STRONG rating in this criterion. An applicant that can demonstrate a plan to achieve self-sustainability within the base 2-year period of funding based on measurable milestones will receive a MODERATE in this rating criterion and those who present no plan for self-sustainability will receive a MARGINAL in this rating.

h. *Risk:* The Bureau will assess the risks to successful implementation and operation of the proposed RIA, and the degree to which proposed mitigation activities might address/offset those risks. Evaluators will also assess the practicality of proposed mitigation activities in terms of cost, complexity, and time required to implement the actions.

An applicant that can demonstrate the development of, at minimum, qualitative risk assessments of proposed projects in meeting Federal eligibility requirements (see Chapter 3 of the Bureau Credit Programs Guide: *https://www.transportation.gov/sites/buildamerica.dot.gov/files/2019-08/Bureau%20Credit%20Programs%20Guide_March_2017.pdf#page=29*) will receive a STRONG rating in this criterion. An applicant that can demonstrate a plan to develop, at minimum, qualitative risk assessments of proposed projects within the base 2-year period of funding will receive a MODERATE rating in this criterion and those that demonstrate no risk assessments or plans to develop them will receive a MARGINAL rating.

i. *Alignment with Department Priorities:* The Bureau will consider the extent to which each proposed project to be aided by the RIA will address the following Department priorities:

(1) *Safety:* DOT will assess the project's ability to foster a safe transportation system for the movement of goods and people, consistent with the Department's strategic goal to reduce transportation-related fatalities and serious injuries across the transportation system.

(2) *Environmental Sustainability:* DOT will consider the extent to which the project incorporates considerations of climate change, resilience, and environmental justice in the planning stage and in project delivery, such as through incorporation of specific design elements that address climate change impacts.

(3) *Equity and Accessibility:* DOT will consider the extent to which the project: (i) increases transportation choices and equity for individuals; (ii) expands access to essential services for communities across the United States, particularly for underserved or disadvantaged communities; (iii) improves connectivity for citizens to jobs, health care, and other critical destinations, or (iv) proactively addresses racial equity [5] and barriers to opportunity, through the planning process or through incorporation of design elements.

(4) *Innovative Technology:* Consistent with DOT's objectives to encourage transformative projects that take the lead in deploying innovative technologies and practices that drive outcomes in terms of safety, environmental sustainability, quality of life, and state of good repair, DOT will assess the extent to which the applicant uses innovative strategies, including: (i) innovative technologies, (ii) innovative project delivery, or (iii) innovative financing.

(5) *State of Good Repair:* Consistent with the Department's strategic objective to maintain and upgrade existing transportation systems, DOT will assess whether and to what extent: (i) the project is consistent with relevant plans to maintain transportation facilities or systems in a state of good repair and address current and projected vulnerabilities; (ii) if left unimproved, the poor condition of the asset will threaten future transportation network efficiency, mobility of goods or accessibility and mobility of people, or economic growth; (iii) the project is appropriately capitalized, including whether project sponsor has conducted scenario planning and/or fiscal impact analysis to understand the future impact on public finances; (iv) a sustainable source of revenue is available for operations and maintenance of the project and the project will reduce overall life-cycle costs; (v) the project will maintain or improve transportation infrastructure that supports border security functions; and (vi) the project includes a plan to maintain the transportation infrastructure in a state of good repair. DOT will prioritize projects that ensure the good condition of transportation infrastructure, including rural transportation infrastructure, that support commerce and economic growth. Transit Oriented Development: The Bureau will consider the extent to which the proposed project addresses Departmental priorities to improve transportation systems, including: (i) Project Types: DOT will consider whether the project incorporates economic development and related infrastructure activities. Additionally, DOT will consider whether the project supports safety, environmental-sustainability, equity, and accessibility in a mix of commercial, residential, office, and entertainment uses; and (ii) Transportation Access: DOT will consider if the project is accessible to one or more: (a) fixed guideway transit facilities, (b) passenger rail stations, (c) intercity bus stations, and (d) intermodal facilities (transit, freight transfer, etc.).

An applicant that can demonstrate a pipeline of projects that address the TOD elements described in item (6) above and four others of the above-listed Department priorities in this Section E.1(j) (Transformative Projects) will receive a STRONG rating in this criterion. An applicant that does not address the TOD elements described in item (6) but does address at least four of the other Department priorities listed above in this Section E.1(j) will receive a MODERATE rating in this criterion and an applicant that does not address the TOD elements and addresses four or fewer of other Department priorities listed above in this Section E.1(j) will receive a MARGINAL rating.

2. *Review and Selection Process:* A Review Team will review all eligible applications received by the deadline. This Review Team will consist of Modal Liaisons from the Federal Highway Administration (FHWA), Federal Railroad Administration (FRA) and Federal Transit Administration (FTA) and Bureau employees designated by the Executive Director. The Program application review and selection process consists of two steps: (1) the Review Team will evaluate each proposal and determine eligibility based on criteria outlined in Section C.1 of

[5] Definitions for ''racial equity'' and ''underserved communities'' are found in Executive Order 13985, Advancing Racial Equity and Support for Underserved Communities Through the Federal Government, Sections 2 (a) and (b).

this notice and, if deemed eligible; and (2) the Review Team will evaluate the proposal based on the Selection Criteria in Section E.1 of this notice. In reviewing the application, each criterion will be given one of the following qualitative ratings: STRONG, MODERATE, or MARGINAL. These ratings are based on the proposal's alignment with the criteria. No one criterion is weighted higher or lower than the others. A collective overall assessment rating will be assigned to each application based on the qualitative ratings assigned for each evaluation criterion. The collective overall assessment will ultimately reflect how well the proposal meets the goals of the Program as stated in Section A.3. of the NOFO. Each application will be given an overall assessment rating of ''high'' if it receives a rating of STRONG in at least 6 of the evaluation criteria; an overall assessment rating of ''medium'' if it receives a rating of MODERATE or a combination of STRONG and MODERATE in at least 6 of the evaluation criteria; and an overall assessment rating of ''low'' if it receives a MARGINAL in 6 or more categories. The Review Team will present its findings to the Senior Review Team, which consists of Bureau Leadership, including the Executive Director. The Executive Director will finalize recommendations and present them to the Secretary. The final award decisions will be made by the Secretary of Transportation.

3. *Additional Information:* Prior to award, each selected applicant will be subject to a risk assessment as required by 2 CFR 200.205. The Department must review and consider any information about the applicant that is in the designated integrity and performance system accessible through SAM (currently the Federal Awardee Performance and Integrity Information System (FAPIIS)). An applicant may review information in FAPIIS and comment on any information about itself. The Department will consider comments by the applicant, in addition to the other information in FAPIIS, in making a judgment about the applicant's integrity, business ethics, and record of performance under Federal awards when completing the review of risk posed by applicants.

F. Federal Award Administration Information

1. Federal Award Notice

Following the evaluation process outlined in Section E.2, the Secretary will announce awarded projects by posting a list of selected RIA at *https://www.transportation.gov/buildamerica/financing/tifia/regional-infrastructure-accelerators-program.* Notice of selection is not authorization to begin performance or to incur costs for the proposed RIA. Following that announcement, the Bureau will contact the point of contact listed in the SF 424 to initiate negotiation of the cooperative agreement.

2. Administration and National Policy Requirements

Performance under the cooperative agreement will be governed by and in compliance with the following requirements as applicable to the type of organization of the recipient and any applicable sub-recipients:

All awards will be administered pursuant to the Uniform Administrative Requirements, Cost Principles and Audit Requirements for Federal Awards found in 2 CFR part 200, as adopted by DOT at 2 CFR part 1201.

Other terms and condition as well as performance requirements will be addressed in the cooperative agreement with the recipient. The full terms and conditions of the resulting cooperative agreements may vary and are subject to discussions and negotiations.

In connection with any program or activity conducted with or benefiting from funds awarded under this notice, recipients of funds must comply with all applicable requirements of Federal law, including, without limitation, the Constitution of the United States, statutory, regulatory, and public policy requirements, including without limitation, those protecting free speech, religious liberty, public welfare, the environment, and prohibiting discrimination; the conditions of performance, non-discrimination requirements, and other assurances made applicable to the award of funds in accordance with regulations of the Department of Transportation; and applicable Federal financial assistance and contracting principles promulgated by the Office of Management and Budget. In complying with these requirements, recipients must ensure that no concession agreements are denied, or other contracting decisions made based on speech or other activities protected by the First Amendment. If the Bureau determines that a recipient has failed to comply with applicable Federal requirements, the Bureau may terminate the award of funds and disallow previously incurred costs, requiring the recipient to reimburse any expended award funds.

Executive Order 13858 directs the Executive Branch Departments and agencies to maximize the use of goods, products, and materials produced in the United States through the terms and conditions of Federal financial assistance awards. If selected for an award, grant recipients must be prepared to demonstrate how they will maximize the use of domestic goods, products, and materials, as applicable, in establishing and operating the RIA. Additionally, recipients should be prepared to demonstrate in their application how the RIA addresses the goals and priorities of the Department's new strategic plan. These include: (1) Safety, (2) Economic Strength and Global Competitiveness, (3) Climate and Sustainability, (4) Transformation, and (5) Organizational Excellence. These can include projects that: (1) Are consistent with the National Roadway Safety Strategy, (2) Improves access or provides economic growth opportunities for underserved, overburdened, or rural communities, (3) Considers climate change and sustainability impacts in its planning and construction, (4) Have innovative approaches or delivery methods, and (5) Support Organizational Excellence.

As a condition of grant award, grant recipients may be required to participate in an evaluation undertaken by DOT or another agency or partner. The evaluation may take different forms such as an implementation assessment across grant recipients, an impact and/or outcomes analysis of all or selected sites within or across grant recipients, or a benefit/cost analysis or assessment of return on investment. DOT may require applicants to collect data elements to aid the evaluation and/or use information available through other reporting. As a part of the evaluation, as a condition of award, grant recipients must agree to: (1) make records available to the evaluation contractor or DOT staff; (2) provide access to program records, and any other relevant documents to calculate costs and benefits; (3) in the case of an impact analysis, facilitate the access to relevant information as requested; and (4) follow evaluation procedures as specified by the evaluation contractor or DOT staff.

Recipients and subrecipients are also encouraged to incorporate program evaluation including associated data collection activities from the outset of their program design and implementation to meaningfully document and measure their progress towards meeting an agency priority goal(s). Title I of the Foundations for Evidence-Based Policymaking Act of 2018 (Evidence Act), Public Law No. 115–435 (2019) urges Federal awarding agencies and Federal assistance recipients and subrecipients to use

program evaluation as a critical tool to learn, to improve equitable delivery, and to elevate program service and delivery across the program lifecycle. Evaluation means ''an assessment using systematic data collection and analysis of one or more programs, policies, and organizations intended to assess their effectiveness and efficiency.'' 5 U.S.C. 311. Credible program evaluation activities are implemented with relevance and utility, rigor, independence and objectivity, transparency, and ethics (OMB Circular A–11, Part 6 Section 290).

For grant recipients receiving an award, evaluation costs are allowable costs (either as direct or indirect), unless prohibited by statute or regulation, and such costs may include the personnel and equipment needed for data infrastructure and expertise in data analysis, performance, and evaluation. (2 CFR part 200).''

3. Reporting

a. Progress Reporting on Grant Activities

Each applicant selected for RIA grant funding must submit semi-annual progress reports as agreed to in the cooperative agreement to monitor RIA progress and ensure accountability and financial transparency in the RIA grant program.

b. Performance Reporting

Each applicant selected for RIA grant funding must collect and report to the Bureau information on the RIA's performance. The specific performance information and reporting period will be determined on an individual basis. It is anticipated that the Bureau and the grant recipient will hold monthly progress meetings or calls during which the Bureau will review project activities, schedule, and progress toward mutually agreed upon performance targets in the cooperative agreement. If the award is greater than $500,000 over the period of performance, applicants must adhere to the post award reporting requirements reflected in 2 CFR part 200 Appendix XII—Award Term and Condition for Recipient Integrity and Performance Matters.

c. Reporting of Matters Related to Recipient Integrity and Performance

If the total value of a selected applicant's currently active grants, cooperative agreements, and procurement contracts from all Federal awarding agencies exceeds $10,000,000 for any period of time during the period of performance of this Federal award, then the applicant during that period of time must maintain the currency of information reported to the SAM that is made available in the designated integrity and performance system (currently FAPIIS) about civil, criminal, or administrative proceedings described in paragraph 2 of this award term and condition. This is a statutory requirement under section 872 of Public Law 110–417, as amended (41 U.S.C. 2313). As required by section 3010 of Public Law 111–212, all information posted in the designated integrity and performance system on or after April 15, 2011, except past performance reviews required for Federal procurement contracts, will be publicly available.

G. Federal Awarding Agency Contacts

For further information concerning this notice please contact the Bureau via email at *RIA@dot.gov* or call Carl Ringgold at 202–366–2750 or *Carl.Ringgold@dot.gov.* A TDD is available for individuals who are deaf or hard of hearing at 202–366–3993. In addition, the Bureau will post answers to questions and requests for clarifications on the Bureau's website at *https://www.transportation.gov/buildamerica/financing/tifia/regional-infrastructure-accelerators-program.* To ensure applicants receive accurate information about eligibility or the Program, the applicant is encouraged to contact the Bureau directly, rather than through intermediaries or third parties, with questions. Bureau staff may also conduct briefings on the Program grant selection and award process upon request.

H. Other Information

1. *Protection of Confidential Business Information:* All information submitted as part of or in support of any application shall use publicly available data or data that can be made public and methodologies that are accepted by industry practice and standards, to the extent possible. If the applicant submits information that the applicant considers to be a trade secret or confidential commercial or financial information, the applicant must provide that information in a separate document, which the applicant may cross-reference from the application narrative or other portions of the application. For the separate document containing confidential information, the applicant must do the following: (1) State on the cover of that document that it ''Contains Confidential Business Information (CBI)''; (2) mark each page that contains confidential information with ''CBI''; (3) highlight or otherwise denote the confidential content on each page; and (4) at the end of the document, indicate whether the CBI is information the applicant keeps private and is of the type of information the applicant regularly keeps private. The Bureau/DOT will protect confidential information complying with these requirements to the extent required under applicable law. If the Bureau receives a Freedom of Information Act (FOIA) request for the information that the applicant has marked in accordance with this section, the Bureau will follow the procedures described in its FOIA regulations at 49 CFR 7.29.

2. *Publication/Sharing of Application Information:* Following the completion of the selection process and announcement of awards, the Bureau intends to publish a list of all applications received along with the names of the applicant organizations and funding amounts requested. Except for the information properly marked as described in Section H.1, the Bureau may make application narratives publicly available or share application information within DOT or with other Federal agencies if DOT determines that sharing is relevant to the respective program's objectives.

3. *Department Feedback on Application:* The Bureau strives to provide as much information as possible to assist applicants with the application process. The Bureau will not review applications in advance, but Bureau staff are available for technical questions and assistance.

4. *Rural Opportunities:* User-friendly information and resources regarding DOT's discretionary grant programs relevant to rural applicants can be found on the Rural Opportunities to Use Transportation for Economic Success (ROUTES) website at *transportation.gov/rural.*

Issued in Washington, DC.

Peter Paul Montgomery Buttigieg,

Secretary of Transportation.

[FR Doc. 2023–08907 Filed 4–26–23; 8:45 am]

BILLING CODE 4910–9X–P

DEPARTMENT OF THE TREASURY

Office of Foreign Assets Control

Notice of OFAC Sanctions Actions

AGENCY: Office of Foreign Assets Control, Treasury.

ACTION: Notice.

SUMMARY: The Department of the Treasury's Office of Foreign Assets Control (OFAC) is publishing the names of persons that have been placed on OFAC's Specially Designated Nationals and Blocked Persons List (SDN List) based on OFAC's determination that one

or more applicable legal criteria were satisfied. All property and interests in property subject to U.S. jurisdiction of these persons are blocked, and U.S. persons are generally prohibited from engaging in transactions with them.

DATES: See **SUPPLEMENTARY INFORMATION** section for applicable date(s).

FOR FURTHER INFORMATION CONTACT: OFAC: Andrea Gacki, Director, tel.: 202–622–2490; Associate Director for Global Targeting, tel.: 202–622–2420; Assistant Director for Licensing, tel.: 202–622–2480; Assistant Director for Regulatory Affairs, tel.: 202–622–4855; or Assistant Director for Sanctions Compliance & Evaluation, tel.: 202–622–2490.

SUPPLEMENTARY INFORMATION:

Electronic Availability

The SDN List and additional information concerning OFAC sanctions programs are available on OFAC's website (*www.treasury.gov/ofac*).

Notice of OFAC Actions

On April 24, 2023, OFAC determined that the property and interests in property subject to U.S. jurisdiction of the following persons are blocked under the relevant sanctions authorities listed below.

Individuals

1. WU, Huihui (a.k.a. ''FAST4RELEASE''; a.k.a. ''WAKEMEUPUPUP''), China; DOB 15 Dec 1988; POB Shandong, China; nationality China; Gender Male; Digital Currency Address—XBT 1986rYHckYbJpGQJy6ornu MyD2N5MTqwDt; alt. Digital Currency Address—XBT 125W5ek3DT6Zqy5S2iPt4FHQd NMCbZA3FU; alt. Digital Currency Address—XBT 1Kc6egXevyLEaeTxLFA1Zyw7 GuhCN8jQtt; alt. Digital Currency Address—XBT 12w6v1qAaBc4W8h8C2Cu5 SKFaKDSv3erUW; alt. Digital Currency Address—XBT 1CPJak9ZyddbawMGJPyEhCi JLXXb4sYv8N; alt. Digital Currency Address—XBT 1DJoVLgn1foJHHngduRPJv RbwpaFEKxvxd; alt. Digital Currency Address—XBT 15kZobLkD6HZgEECtz4oS2V z21XHTnNfSg; alt. Digital Currency Address—XBT 15qyVrZvvVGvB7GWiAZ82 TNcZ6QWMKu3kx; alt. Digital Currency Address—XBT 12YCfVAEzkEZXBYhUTyJJa RkgMXiFxJgcu; alt. Digital Currency Address—XBT 1MkCnCa9agS5t6V1B15 bzusBgYECB4LfWp; alt. Digital Currency Address—XBT 1NuBZQXJPyYQGfoBib8w WBDpZmbtkJa5Ba; alt. Digital Currency Address—XBT 14rjAD8ZP5xaL571cMRE98 qgxxbg1S8mAN; alt. Digital Currency Address—XBT 18yWCu6agTxYqAerMxiz 9sgHrK3VieszzGa; alt. Digital Currency Address—XBT 12jVCWW1ZhTLA5yVnroEJswq KwsfiZKsax; alt. Digital Currency Address—XBT 1J378PbmTKn2sEw6NBrSWV fjZLBZW3DZem; alt. Digital Currency Address—XBT 18aqbRhHupgvC9K8qEqD78 phmTQQWs7B5d; alt. Digital Currency Address—XBT 16ti2EXaae5izfkUZ1Zc59HM csdnHpP5QJ; Secondary sanctions risk: North Korea Sanctions Regulations, sections 510.201 and 510.210; Transactions Prohibited For Persons Owned or Controlled By U.S. Financial Institutions: North Korea Sanctions Regulations section 510.214; Passport E59165201 (China) expires 01 Sep 2025; Identification Number 371326198812157611 (China) (individual) [DPRK3] (Linked To: LAZARUS GROUP).

Designated pursuant to section 2(a)(vii) of Executive Order 13722, ''Blocking Property of the Government of North Korea and the Workers' Party of Korea, and Prohibiting Certain Transactions With Respect to North Korea'' (E.O. 13722), for having materially assisted, sponsored, or provided financial, material, or technological support for, or goods or services to or in support of, LAZARUS GROUP, a person whose property and interests in property are blocked pursuant to E.O. 13722.

2. CHENG, Hung Man, Hong Kong, China; DOB 28 Mar 1964; POB Hong Kong; nationality United Kingdom; Gender Male; Secondary sanctions risk: North Korea Sanctions Regulations, sections 510.201 and 510.210; Transactions Prohibited For Persons Owned or Controlled By U.S. Financial Institutions: North Korea Sanctions Regulations section 510.214; Passport 752079640 (United Kingdom); Identification Number G563542(9) (Hong Kong) (individual) [DPRK3] (Linked To: WU, Huihui).

Designated pursuant to section 2(a)(vii) of E.O. 13722 for having materially assisted, sponsored, or provided financial, material, or technological support for, or goods or services to or in support of, WU HUIHUI, a person whose property and interests in property are blocked pursuant to E.O. 13722.

3. SIM, Hyon Sop (a.k.a. SIM, Hyo'n-so'p), Dandong, China; DOB 25 Nov 1983; POB Pyongyang, North Korea; nationality Korea, North; Gender Male; Digital Currency Address—ETH 0x4f47bc496083c727c5fbe3ce9 cdf2b0f6496270c; Secondary sanctions risk: North Korea Sanctions Regulations, sections 510.201 and 510.210; Transactions Prohibited For Persons Owned or Controlled By U.S. Financial Institutions: North Korea Sanctions Regulations section 510.214; Digital Currency Address—ARB 0x4f47bc496083c727c5fbe3ce9 cdf2b0f6496270c; Digital Currency Address—BSC 0x4f47bc496083c727c5fbe3ce9 cdf2b0f6496270c; Passport 109484100 (Korea, North) expires 24 Dec 2024 (individual) [NPWMD] (Linked To: KOREA KWANGSON BANKING CORP).

Designated pursuant to section 1(a)(iv) of Executive Order 13382, ''Blocking Property of Weapons of Mass Destruction Proliferators and Their Supporters'' (E.O. 13382), for acting or purporting to act for or on behalf of, directly or indirectly, KOREA KWANGSON BANKING CORP, a person whose property and interests in property are blocked pursuant to E.O. 13382.

Authorities: E.O. 13722, 81 FR 14943, 3 CFR, 2016 comp., p. 446 and E.O. 13382, 70 FR 38567, 3 CFR, 2005 comp., p. 170.

Dated: April 24, 2023.

Andrea Gacki,

Director, Office of Foreign Assets Control, U.S. Department of the Treasury.

[FR Doc. 2023–08944 Filed 4–26–23; 8:45 am]

BILLING CODE 4810–AL–P

FEDERAL REGISTER

Vol. 88 Thursday,

No. 81 April 27, 2023

Part II

Department of Health and Human Services

45 CFR Parts 153, 155, and 156

Patient Protection and Affordable Care Act, HHS Notice of Benefit and Payment Parameters for 2024; Final Rule

DEPARTMENT OF HEALTH AND HUMAN SERVICES

45 CFR Parts 153, 155, and 156

[CMS–9899–F]

RIN 0938–AU97

Patient Protection and Affordable Care Act, HHS Notice of Benefit and Payment Parameters for 2024

AGENCY: Centers for Medicare & Medicaid Services (CMS), Department of Health and Human Services (HHS).

ACTION: Final rule.

SUMMARY: This final rule includes payment parameters and provisions related to the HHS-operated risk adjustment and risk adjustment data validation programs, as well as 2024 user fee rates for issuers offering qualified health plans (QHPs) through Federally-facilitated Exchanges (FFEs) and State-based Exchanges on the Federal platform (SBE–FPs). This final rule also has requirements related to updating standardized plan options and reducing plan choice overload; the automatic re-enrollment hierarchy; plan and plan variation marketing name requirements for QHPs; essential community providers (ECPs) and network adequacy; failure to file and reconcile; special enrollment periods (SEPs); the annual household income verification; the deadline for QHP issuers to report enrollment and payment inaccuracies; requirements related to the State Exchange improper payment measurement program; and requirements for agents, brokers, and web-brokers assisting FFE and SBE–FP consumers.

DATES: These regulations are effective on June 18, 2023.

FOR FURTHER INFORMATION CONTACT: Jeff Wu, (301) 492–4305, Rogelyn McLean, (301) 492–4229, Grace Bristol, (410) 786–8437, for general information.

Joshua Paul, (301) 492–4347, Jacquelyn Rudich, (301) 492–5211, John Barfield, (301) 492–4433, or Bryan Kirk, (443) 745–8999, for matters related to HHS-operated risk adjustment.

Leanne Klock, (410) 786–1045, or Joshua Paul, (301) 492–4347, for matters related to risk adjustment data validation (HHS–RADV).

John Barfield, (301) 492–4433, or Leanne Klock, (410) 786–1045, for matters related to FFE and SBE–FP user fees.

Jacob LaGrand, (301) 492–4400, for matters related to actuarial value (AV).

Brian Gubin, (410) 786–1659, for matters related to agent, broker, and web-broker guidelines.

Claire Curtin, (301) 492–4400 or Marisa Beatley, (301) 492–4307, for matters related to failure to file and reconcile.

Grace Bridges, (301) 492–5228, or Natalie Myren, (667) 290–8511, for matters related to the verification process related to eligibility for insurance affordability programs.

Carolyn Kraemer, (301) 492–4197, for matters related to auto re-enrollment in the Exchanges.

Nicholas Eckart, (301) 492–4452, for matters related to termination of Exchange enrollment or coverage for qualified individuals.

Marisa Beatley, (301) 492–4307, or Dena Nelson, (240) 401–3535, for matters related to qualified individuals losing minimum essential coverage (MEC) and qualifying for SEPs.

Samantha Nguyen Kella, (816) 426–6339, for matters related to plan display error SEPs.

Eva LaManna, (301) 492–5565, or Ellen Kuhn, (410) 786–1695, for matters related to the eligibility appeals requirements.

Linus Bicker, (803) 931–6185, for matters related to State Exchange improper payment measurement.

Alexandra Gribbin, (667) 290–9977, for matters related to stand-alone dental plans.

Nikolas Berkobien, (667) 290–9903, for matters related to standardized plan options.

Carolyn Kraemer, (301) 492–4197, for matters related to plan and plan variation marketing name requirements for QHPs.

Emily Martin, (301) 492–4423, or Deborah Hunter, (443) 386–3651, for matters related to network adequacy and ECPs.

Rebecca Braun-Harrison, (667) 290–8846 for matters related to reporting enrollment and payment inaccuracies and administrative appeals.

Jenny Chen, (301) 492–5156, or Shilpa Gogna, (301) 492–4257, for matters related to State Exchange Blueprint approval timelines.

SUPPLEMENTARY INFORMATION:

Table of Contents

I. Executive Summary
II. Background
  A. Legislative and Regulatory Overview
  B. Summary of Major Provisions
III. Provisions of the Proposed Regulations
  A. Part 153—Standards Related to Reinsurance, Risk Corridors, and Risk Adjustment
  B. Part 155—Exchange Establishment Standards and Other Related Standards under the Affordable Care Act
  C. Part 156—Health Insurance Issuer Standards under the Affordable Care Act, Including Standards Related to Exchanges
IV. Collection of Information Requirements
  A. Wage Estimates
  B. ICRs Regarding Repeal of Risk Adjustment State Flexibility to Request a Reduction in Risk Adjustment State Transfers (§ 153.320(d))
  C. ICRs Regarding Risk Adjustment Issuer Data Submission Requirements (§§ 153.610, 153.700, and 153.710)
  D. ICRs Regarding Risk Adjustment Data Validation Requirements When HHS Operates Risk Adjustment (HHS–RADV) (§ 153.630)
  E. ICRs Regarding Navigator, Non-Navigator Assistance Personnel, and Certified Application Counselor Program Standards (§§ 155.210 and 155.225)
  F. ICRs Regarding Providing Correct Information to the FFEs (§ 155.220(j))
  G. ICRs Regarding Documenting Receipt of Consumer Consent (§ 155.220(j))
  H. ICRs Regarding Failure to File and Reconcile Process (§ 155.305(f))
  I. ICRs Regarding Income Inconsistencies (§§ 155.315 and 155.320)
  J. ICRs Regarding the Improper Payment Pre-Testing and Assessment (IPPTA) for State-based Exchanges (§§ 155.1500 through 155.1515)
  K. ICRs Regarding QHP Rate and Benefit Information (§ 156.210)
  L. ICRs Regarding Establishing a Timeliness Standard for Notices of Payment Delinquency (§ 156.270)
  M. Summary of Annual Burden Estimates for Proposed Requirements
  N. Submission of PRA-Related Comments
V. Regulatory Impact Analysis
  A. Statement of Need
  B. Overall Impact
  C. Impact Estimates of the Payment Notice Provisions and Accounting Table
  D. Regulatory Alternatives Considered
  E. Regulatory Flexibility Act (RFA)
  F. Unfunded Mandates Reform Act (UMRA)
  G. Federalism

I. Executive Summary

We are finalizing changes to the provisions and parameters implemented through prior rulemaking to implement the Patient Protection and Affordable Care Act (ACA).[1] These requirements are published under the authority granted to the Secretary by the ACA and the Public Health Service (PHS) Act.[2] In this final rule, we are finalizing changes related to some of the ACA provisions and parameters we previously implemented and are implementing new provisions. Our goal with these requirements is providing quality,

[1] The Patient Protection and Affordable Care Act (Pub. L. 111–148) was enacted on March 23, 2010. The Healthcare and Education Reconciliation Act of 2010 (Pub. L. 111–152), which amended and revised several provisions of the Patient Protection and Affordable Care Act, was enacted on March 30, 2010. In this rulemaking, the two statutes are referred to collectively as the ''Patient Protection and Affordable Care Act,'' ''Affordable Care Act,'' or ''ACA.''

[2] See sections 1311, 1312, 1313, 1321, and 1343 of the ACA and section 2792 of the PHS Act.

affordable coverage to consumers while minimizing administrative burden and ensuring program integrity. The changes finalized in this rule are also intended to help advance health equity and mitigate health disparities.

II. Background

A. Legislative and Regulatory Overview

Title I of the Health Insurance Portability and Accountability Act of 1996 (HIPAA) added a new title XXVII to the PHS Act to establish various reforms to the group and individual health insurance markets.

These provisions of the PHS Act were later augmented by other laws, including the ACA.

Subtitles A and C of title I of the ACA reorganized, amended, and added to the provisions of part A of title XXVII of the PHS Act relating to group health plans and health insurance issuers in the group and individual markets. The term ''group health plan'' includes both insured and self-insured group health plans.

Section 2702 of the PHS Act, as added by the ACA, establishes requirements for guaranteed availability of coverage in the group and individual markets.

Section 1301(a)(1)(B) of the ACA directs all issuers of QHPs to cover the essential health benefit (EHB) package described in section 1302(a) of the ACA, including coverage of the services described in section 1302(b) of the ACA, adherence to the cost-sharing limits described in section 1302(c) of the ACA, and meeting the AV levels established in section 1302(d) of the ACA. Section 2707(a) of the PHS Act, which is effective for plan or policy years beginning on or after January 1, 2014, extends the requirement to cover the EHB package to non-grandfathered individual and small group health insurance coverage, irrespective of whether such coverage is offered through an Exchange. In addition, section 2707(b) of the PHS Act directs non-grandfathered group health plans to ensure that cost-sharing under the plan does not exceed the limitations described in section 1302(c)(1) of the ACA.

Section 1302 of the ACA provides for the establishment of an EHB package that includes coverage of EHBs (as defined by the Secretary of HHS), cost-sharing limits, and AV requirements. The law directs that EHBs be equal in scope to the benefits provided under a typical employer plan, and that they cover at least the following 10 general categories: ambulatory patient services; emergency services; hospitalization; maternity and newborn care; mental health and substance use disorder services, including behavioral health treatment; prescription drugs; rehabilitative and habilitative services and devices; laboratory services; preventive and wellness services and chronic disease management; and pediatric services, including oral and vision care. Section 1302(d) of the ACA describes the various levels of coverage based on their AV. Consistent with section 1302(d)(2)(A) of the ACA, AV is calculated based on the provision of EHB to a standard population. Section 1302(d)(3) of the ACA directs the Secretary of HHS to develop guidelines that allow for de minimis variation in AV calculations. Sections 1302(b)(4)(A) through (D) of the ACA establish that the Secretary must define EHB in a manner that: (1) Reflects appropriate balance among the 10 categories; (2) is not designed in such a way as to discriminate based on age, disability, or expected length of life; (3) takes into account the health care needs of diverse segments of the population; and (4) does not allow denials of EHBs based on age, life expectancy, disability, degree of medical dependency, or quality of life.

Section 1311(c) of the ACA provides the Secretary the authority to issue regulations to establish criteria for the certification of QHPs. Section 1311(c)(1)(B) of the ACA requires, among the criteria for certification that the Secretary must establish by regulation that QHPs ensure a sufficient choice of providers. Section 1311(e)(1) of the ACA grants the Exchange the authority to certify a health plan as a QHP if the health plan meets the Secretary's requirements for certification issued under section 1311(c) of the ACA, and the Exchange determines that making the plan available through the Exchange is in the interests of qualified individuals and qualified employers in the State. Section 1311(c)(6)(C) of the ACA directs the Secretary of HHS to require an Exchange to provide for special enrollment periods and section 1311(c)(6)(D) of the ACA directs the Secretary of HHS to require an Exchange to provide for a monthly enrollment period for Indians, as defined by section 4 of the Indian Health Care Improvement Act.

Section 1311(d)(3)(B) of the ACA permits a State, at its option, to require QHPs to cover benefits in addition to EHB. This section also requires a State to make payments, either to the individual enrollee or to the issuer on behalf of the enrollee, to defray the cost of these additional State-required benefits.

Section 1312(c) of the ACA generally requires a health insurance issuer to consider all enrollees in all health plans (except grandfathered health plans) offered by such issuer to be members of a single risk pool for each of its individual and small group markets. States have the option to merge the individual and small group market risk pools under section 1312(c)(3) of the ACA.

Section 1312(e) of the ACA provides the Secretary with the authority to establish procedures under which a State may allow agents or brokers to (1) enroll qualified individuals and qualified employers in QHPs offered through Exchanges and (2) assist individuals in applying for advance payments of the premium tax credit (APTC) and cost-sharing reductions (CSRs) for QHPs sold through an Exchange.

Sections 1313 and 1321 of the ACA provide the Secretary with the authority to oversee the financial integrity of State Exchanges, their compliance with HHS standards, and the efficient and non-discriminatory administration of State Exchange activities. Section 1313(a)(5)(A) of the ACA provides the Secretary with the authority to implement any measure or procedure that the Secretary determines is appropriate to reduce fraud and abuse in the administration of the Exchanges. Section 1321 of the ACA provides for State flexibility in the operation and enforcement of Exchanges and related requirements.

Section 1321(a) of the ACA provides broad authority for the Secretary to establish standards and regulations to implement the statutory requirements related to Exchanges, QHPs and other components of title I of the ACA, including such other requirements as the Secretary determines appropriate. When operating an FFE under section 1321(c)(1) of the ACA, HHS has the authority under sections 1321(c)(1) and 1311(d)(5)(A) of the ACA to collect and spend user fees. Office of Management and Budget (OMB) Circular A–25 Revised establishes Federal policy regarding user fees and specifies that a user charge will be assessed against each identifiable recipient for special benefits derived from Federal activities beyond those received by the general public.

Section 1321(d) of the ACA provides that nothing in title I of the ACA must be construed to preempt any State law that does not prevent the application of title I of the ACA. Section 1311(k) of the ACA specifies that Exchanges may not establish rules that conflict with or prevent the application of regulations issued by the Secretary.

Section 1343 of the ACA establishes a permanent risk adjustment program to provide payments to health insurance issuers that attract higher-than-average risk populations, such as those with chronic conditions, funded by payments from those that attract lower-than-average risk populations, thereby reducing incentives for issuers to avoid higher-risk enrollees. Section 1343(b) of the ACA provides that the Secretary, in consultation with States, shall establish criteria and methods to be used in carrying out the risk adjustment activities under this section. Consistent with section 1321(c) of the ACA, the Secretary is responsible for operating the risk adjustment program in any State that fails to do so.[3]

Section 1401(a) of the ACA added section 36B to the Internal Revenue Code (the Code), which, among other things, requires that a taxpayer reconcile APTC for a year of coverage with the amount of the premium tax credit (PTC) the taxpayer is allowed for the year.

Section 1402 of the ACA provides for, among other things, reductions in cost-sharing for EHB for qualified low- and moderate-income enrollees in silver level QHPs offered through the individual market Exchanges. This section also provides for reductions in cost-sharing for Indians enrolled in QHPs at any metal level.

Section 1411(c) of the ACA requires the Secretary to submit certain information provided by applicants under section 1411(b) of the ACA to other Federal officials for verification, including income and family size information to the Secretary of the Treasury. Section 1411(d) of the ACA provides that the Secretary must verify the accuracy of information provided by applicants under section 1411(b) of the ACA, for which section 1411(c) of the ACA does not prescribe a specific verification procedure, in such manner as the Secretary determines appropriate.

Section 1411(f) of the ACA requires the Secretary, in consultation with the Treasury and Homeland Security Department Secretaries and the Commissioner of Social Security, to establish procedures for hearing and making decisions governing appeals of Exchange eligibility determinations. Section 1411(f)(1)(B) of the ACA requires the Secretary to establish procedures to redetermine eligibility on a periodic basis, in appropriate circumstances, including eligibility to purchase a QHP through the Exchange and for APTC and CSRs.

Section 1411(g) of the ACA allows the use of applicant information only for the limited purposes of, and to the extent necessary to, ensure the efficient operation of the Exchange, including by verifying eligibility to enroll through the Exchange and for APTC and CSRs, and limits the disclosure of such information.

Section 5000A of the Code, as added by section 1501(b) of the ACA, requires individuals to have minimum essential coverage (MEC) for each month, qualify for an exemption, or make an individual shared responsibility payment. Under the Tax Cuts and Jobs Act, which was enacted on December 22, 2017, the individual shared responsibility payment is reduced to $0, effective for months beginning after December 31, 2018. Notwithstanding that reduction, certain exemptions are still relevant to determine whether individuals age 30 and above qualify to enroll in catastrophic coverage under §§ 155.305(h) and 156.155(a)(5).

1. Premium Stabilization Programs

The premium stabilization programs refer to the risk adjustment, risk corridors, and reinsurance programs established by the ACA.[4] For past rulemaking, we refer readers to the following rules:

- In the March 23, 2012 **Federal Register** (77 FR 17219) (Premium Stabilization Rule), we implemented the premium stabilization programs.
- In the March 11, 2013 **Federal Register** (78 FR 15409) (2014 Payment Notice), we finalized the benefit and payment parameters for the 2014 benefit year to expand the provisions related to the premium stabilization programs and set forth payment parameters in those programs.
- In the October 30, 2013 **Federal Register** (78 FR 65046), we finalized the modification to the HHS-operated methodology related to community rating States.
- In the November 6, 2013 **Federal Register** (78 FR 66653), we published a correcting amendment to the 2014 Payment Notice final rule to address how an enrollee's age for the risk score calculation would be determined under the HHS-operated risk adjustment methodology.
- In the March 11, 2014 **Federal Register** (79 FR 13743) (2015 Payment Notice), we finalized the benefit and payment parameters for the 2015 benefit year to expand the provisions related to the premium stabilization programs, set forth certain oversight provisions, and established payment parameters in those programs.
- In the May 27, 2014 **Federal Register** (79 FR 30240), we announced the 2015 fiscal year sequestration rate for the risk adjustment program.
- In the February 27, 2015 **Federal Register** (80 FR 10749) (2016 Payment Notice), we finalized the benefit and payment parameters for the 2016 benefit year to expand the provisions related to the premium stabilization programs, set forth certain oversight provisions, and established the payment parameters in those programs.
- In the March 8, 2016 **Federal Register** (81 FR 12203) (2017 Payment Notice), we finalized the benefit and payment parameters for the 2017 benefit year to expand the provisions related to the premium stabilization programs, set forth certain oversight provisions, and established the payment parameters in those programs.
- In the December 22, 2016 **Federal Register** (81 FR 94058) (2018 Payment Notice), we finalized the benefit and payment parameters for the 2018 benefit year, added the high-cost risk pool parameters to the HHS risk adjustment methodology, incorporated prescription drug factors in the adult models, established enrollment duration factors for the adult models, and finalized policies related to the collection and use of enrollee-level External Data Gathering Environment (EDGE) data.
- In the April 17, 2018 **Federal Register** (83 FR 16930) (2019 Payment Notice), we finalized the benefit and payment parameters for 2019 benefit year, created the State flexibility framework permitting States to request a reduction in risk adjustment State transfers calculated by HHS, and adopted a new methodology for HHS–RADV adjustments to transfers.
- In the May 11, 2018 **Federal Register** (83 FR 21925), we published a correction to the 2019 risk adjustment coefficients in the 2019 Payment Notice final rule.
- On July 27, 2018, consistent with 45 CFR 153.320(b)(1)(i), we updated the 2019 benefit year final risk adjustment model coefficients to reflect an additional recalibration related to an update to the 2016 enrollee-level EDGE data set.[5]

[3] In the 2014 through 2016 benefit years, HHS operated the risk adjustment program in every State and the District of Columbia, except Massachusetts. Beginning with the 2017 benefit year, HHS has operated the risk adjustment program in all 50 States and the District of Columbia.

[4] See ACA section 1341 (transitional reinsurance program), ACA section 1342 (risk corridors program), and ACA section 1343 (risk adjustment program).

[5] CMS. (2018, July 27). *Updated 2019 Benefit Year Final HHS Risk Adjustment Model Coefficients. https://www.cms.gov/CCIIO/Resources/Regulations-and-Guidance/Downloads/2019-Updtd-Final-HHS-RA-Model-Coefficients.pdf.*

• In the July 30, 2018 **Federal Register** (83 FR 36456), we adopted the 2017 benefit year risk adjustment methodology as established in the final rules published in the March 23, 2012 (77 FR 17220 through 17252) and March 8, 2016 editions of the **Federal Register** (81 FR 12204 through 12352). The final rule set forth an additional explanation of the rationale supporting the use of Statewide average premium in the HHS-operated risk adjustment State payment transfer formula for the 2017 benefit year, including the reasons why the program is operated in a budget-neutral manner. The final rule also permitted HHS to resume 2017 benefit year risk adjustment payments and charges. HHS also provided guidance as to the operation of the HHS-operated risk adjustment program for the 2017 benefit year in light of the publication of the final rule.

• In the December 10, 2018 **Federal Register** (83 FR 63419), we adopted the 2018 benefit year HHS-operated risk adjustment methodology as established in the final rules published in the March 23, 2012 (77 FR 17219) and the December 22, 2016 (81 FR 94058) editions of the **Federal Register**. In the rule, we set forth an additional explanation of the rationale supporting the use of Statewide average premium in the HHS-operated risk adjustment State payment transfer formula for the 2018 benefit year, including the reasons why the program is operated in a budget-neutral manner.

• In the April 25, 2019 **Federal Register** (84 FR 17454) (2020 Payment Notice), we finalized the benefit and payment parameters for 2020 benefit year, as well as the policies related to making the enrollee-level EDGE data available as a limited data set for research purposes and expanding the HHS uses of the enrollee-level EDGE data, approval of the request from Alabama to reduce risk adjustment transfers by 50 percent in the small group market for the 2020 benefit year, and updates to HHS–RADV program requirements.

• On May 12, 2020, consistent with § 153.320(b)(1)(i), we published the 2021 Benefit Year Final HHS Risk Adjustment Model Coefficients on the Center for Consumer Information and Insurance Oversight (CCIIO) website.[6]

• In the May 14, 2020 **Federal Register** (85 FR 29164) (2021 Payment Notice), we finalized the benefit and payment parameters for 2021 benefit year, as well as adopted updates to the risk adjustment models' hierarchical condition categories (HCCs) to transition to International Classification of Diseases, Tenth Revision (ICD–10) codes, approved the request from Alabama to reduce risk adjustment transfers by 50 percent in small group market for the 2021 benefit year, and modified the outlier identification process under the HHS–RADV program.

• In the December 1, 2020 **Federal Register** (85 FR 76979) (Amendments to the HHS-Operated Risk Adjustment Data Validation Under the Patient Protection and Affordable Care Act's HHS-Operated Risk Adjustment Program (2020 HHS–RADV Amendments Rule)), we adopted the creation and application of Super HCCs in the sorting step that assigns HCCs to failure rate groups, finalized a sliding scale adjustment in HHS–RADV error rate calculation, and added a constraint for negative error rate outliers with a negative error rate. We also established a transition from the prospective application of HHS–RADV adjustments to apply HHS–RADV results to risk scores from the same benefit year as that being audited.

• In the September 2, 2020 **Federal Register** (85 FR 54820), we issued an interim final rule containing certain policy and regulatory revisions in response to the COVID–19 public health emergency (PHE), wherein we set forth risk adjustment reporting requirements for issuers offering temporary premium credits in the 2020 benefit year.

• In the May 5, 2021 **Federal Register** (86 FR 24140), we issued part 2 of the 2022 Payment Notice final rule (2022 Payment Notice) finalizing a subset of proposals from the 2022 Payment Notice proposed rule, including policy and regulatory revisions related to the risk adjustment program, finalization of the benefit and payment parameters for the 2022 benefit year, and approval of the request from Alabama to reduce risk adjustment transfers by 50 percent in the individual and small group markets for the 2022 benefit year. In addition, this final rule established a revised schedule of collections for HHS–RADV and updated the provisions regulating second validation audit (SVA) and initial validation audit (IVA) entities.

• On July 19, 2021, consistent with § 153.320(b)(1)(i), we released Updated 2022 Benefit Year Final HHS Risk Adjustment Model Coefficients on the CCIIO website, announcing some minor revisions to the 2022 benefit year final risk adjustment adult model coefficients.[7]

• In the May 6, 2022 **Federal Register** (87 FR 27208) (2023 Payment Notice), we finalized revisions related to the risk adjustment program, including the benefit and payment parameters for the 2023 benefit year, risk adjustment model recalibration, and collection and extraction of enrollee-level EDGE data. We also finalized the adoption of the interacted HCC count specification for the adult and child models, along with modified enrollment duration factors for the adult model models, beginning with the 2023 benefit year.[8] We also repealed the ability for States, other than prior participants, to request a reduction in risk adjustment State transfers starting with the 2024 benefit year. In addition, we approved a 25 percent reduction to 2023 benefit year transfers in Alabama's individual market and a 10 percent reduction to 2023 benefit year transfers in Alabama's small group market. We also finalized further refinements to the HHS–RADV error rate calculation methodology beginning with the 2021 benefit year and beyond.

2. Program Integrity

We have finalized program integrity standards related to the Exchanges and premium stabilization programs in two rules: the ''first Program Integrity Rule'' published in the August 30, 2013 **Federal Register** (78 FR 54069), and the ''second Program Integrity Rule'' published in the October 30, 2013 **Federal Register** (78 FR 65045). We also refer readers to the 2019 Patient Protection and Affordable Care Act; Exchange Program Integrity rule published in the December 27, 2019 **Federal Register** (84 FR 71674).

3. Market Rules

For past rulemaking related to the market rules, we refer readers to the following rules:

• In the April 8, 1997 **Federal Register** (62 FR 16894), HHS, with the Department of Labor and Department of the Treasury, published an interim final rule relating to the HIPAA health insurance reforms. In the February 27, 2013 **Federal Register** (78 FR 13406) (2014 Market Rules), we published the health insurance market rules.

[6] CMS. (2020, May 12). *Final 2021 Benefit Year Final HHS Risk Adjustment Model Coefficients. https://www.cms.gov/CCIIO/Resources/Regulations-and-Guidance/Downloads/Final-2021-Benefit-Year-Final-HHS-Risk-Adjustment-Model-Coefficients.pdf.*

[7] *See* CMS. (2021, July 19). *2022 Benefit Year Final HHS Risk Adjustment Model Coefficients. https://www.cms.gov/files/document/updated-2022-benefit-year-final-hhs-risk-adjustment-model-coefficients-clean-version-508.pdf.*

[8] On May 6, 2022, we also published the *2023 Benefit Year Final HHS Risk Adjustment Model Coefficients* at *https://www.cms.gov/files/document/2023-benefit-year-final-hhs-risk-adjustment-model-coefficients.pdf.*

• In the May 27, 2014 **Federal Register** (79 FR 30240) (2015 Market Standards Rule), we published the Exchange and Insurance Market Standards for 2015 and Beyond.

• In the December 22, 2016 **Federal Register** (81 FR 94058), we provided additional guidance on guaranteed availability and guaranteed renewability.

• In the April 18, 2017 **Federal Register** (82 FR 18346) (Market Stabilization final rule), we further interpreted the guaranteed availability provision.

• In the April 17, 2018 **Federal Register** (83 FR 17058) (2019 Payment Notice final rule), we clarified that certain exceptions to the special enrollment periods only apply to coverage offered outside of the Exchange in the individual market.

• In the June 19, 2020 **Federal Register** (85 FR 37160) (2020 section 1557 final rule), in which HHS discussed section 1557 of the ACA, HHS removed nondiscrimination protections based on gender identity and sexual orientation from the guaranteed availability regulation.

• In part 2 of the 2022 Payment Notice final rule in the May 5, 2021 **Federal Register** (86 FR 24140), we made additional amendments to the guaranteed availability regulation regarding special enrollment periods and finalized new special enrollment periods related to untimely notice of triggering events, cessation of employer contributions or government subsidies to COBRA continuation coverage, and loss of APTC eligibility.

• In the September 27, 2021 **Federal Register** (86 FR 53412) (part 3 of the 2022 Payment Notice final rule), which was published by HHS and the Department of the Treasury, we finalized additional amendments to the guaranteed availability regulations regarding special enrollment periods.

• In the May 6, 2022 **Federal Register** (87 FR 27208), we finalized a revision to our interpretation of the guaranteed availability requirement to prohibit issuers from applying a premium payment to an individual's or employer's past debt owed for coverage and refusing to effectuate enrollment in new coverage.

4. Exchanges

We published a request for comment relating to Exchanges in the August 3, 2010 **Federal Register** (75 FR 45584). We issued initial guidance to States on Exchanges on November 18, 2010. In the March 27, 2012 **Federal Register** (77 FR 18309) (Exchange Establishment Rule), we implemented the Affordable Insurance Exchanges (''Exchanges''), consistent with title I of the ACA, to provide competitive marketplaces for individuals and small employers to directly compare available private health insurance options on the basis of price, quality, and other factors. This included implementation of components of the Exchanges and standards for eligibility for Exchanges, as well as network adequacy and ECP certification standards.

In the 2014 Payment Notice and the Amendments to the HHS Notice of Benefit and Payment Parameters for 2014 interim final rule, published in the March 11, 2013 **Federal Register** (78 FR 15541), we set forth standards related to Exchange user fees. We established an adjustment to the FFE user fee in the Coverage of Certain Preventive Services under the Affordable Care Act final rule, published in the July 2, 2013 **Federal Register** (78 FR 39869) (Preventive Services Rule).

In the 2016 Payment Notice, we also set forth the ECP certification standard at § 156.235, with revisions in the 2017 Payment Notice in the March 8, 2016 **Federal Register** (81 FR 12203) and the 2018 Payment Notice in the December 22, 2016 **Federal Register** (81 FR 94058).

In an interim final rule, published in the May 11, 2016 **Federal Register** (81 FR 29146), we made amendments to the parameters of certain special enrollment periods (2016 Interim Final Rule). We finalized these in the 2018 Payment Notice final rule, published in the December 22, 2016 **Federal Register** (81 FR 94058).

In the April 18, 2017 Market Stabilization final rule **Federal Register** (82 FR 18346), we amended standards relating to special enrollment periods and QHP certification. In the 2019 Payment Notice final rule, published in the April 17, 2018 **Federal Register** (83 FR 16930), we modified parameters around certain special enrollment periods. In the April 25, 2019 **Federal Register** (84 FR 17454), the final 2020 Payment Notice established a new special enrollment period.

We published the final rule in the May 14, 2020 **Federal Register** (85 FR 29164) (2021 Payment Notice).

In the January 19, 2021 **Federal Register** (86 FR 6138), we finalized part 1 of the 2022 Payment Notice final rule that finalized only a subset of the proposals in the 2022 Payment Notice proposed rule. In the May 5, 2021 **Federal Register** (86 FR 24140), we published part 2 of the 2022 Payment Notice final rule. In the September 27, 2021 **Federal Register** (86 FR 53412) part 3 of the 2022 Payment Notice final rule, in conjunction with the Department of the Treasury, we finalized amendments to certain policies in part 1 of the 2022 Payment Notice final rule.

In the May 6, 2022 **Federal Register** (87 FR 27208), we finalized changes to maintain the user fee rate for issuers offering plans through the FFEs and maintain the user fee rate for issuers offering plans through the SBE–FPs for the 2023 benefit year. We also finalized various policies to address certain agent, broker, and web-broker practices and conduct. We also finalized updates to the requirement that all Exchanges conduct special enrollment period verifications.

5. Essential Health Benefits

On December 16, 2011, HHS released a bulletin that outlined an intended regulatory approach for defining EHB, including a benchmark-based framework. We established requirements relating to EHBs in the Standards Related to Essential Health Benefits, Actuarial Value, and Accreditation final rule, which was published in the February 25, 2013 **Federal Register** (78 FR 12833) (EHB Rule). In the 2019 Payment Notice, published in the April 17, 2018 **Federal Register** (83 FR 16930), we added § 156.111 to provide States with additional options from which to select an EHB-benchmark plan for plan years (PYs) 2020 and beyond.

B. Summary of Major Provisions

The regulations outlined in this final rule will be codified in 45 CFR parts 153, 155, and 156.

1. 45 CFR part 153

In accordance with the OMB Report to Congress on the Joint Committee Reductions for Fiscal Year 2023, the permanent risk adjustment program is subject to the fiscal year 2023 sequestration.[9] Therefore, the risk adjustment program will be sequestered at a rate of 5.7 percent for payments made from fiscal year 2023 resources (that is, funds collected during the 2023 fiscal year). The funds that are sequestered in fiscal year 2023 from the risk adjustment program will become available for payment to issuers in fiscal year 2024 without further congressional action. We did not receive any requests from States to operate risk adjustment for the 2024 benefit year; therefore, HHS will operate risk adjustment in every

[9] OMB. (2022, March 28). OMB Report to the Congress on the BBEDCA 251A Sequestration for Fiscal Year 2023. *https://www.whitehouse.gov/wpcontent/uploads/2022/03/BBEDCA_251A_Sequestration_Report_FY2023.pdf.*

State and the District of Columbia for the 2024 benefit year.

We will recalibrate the 2024 benefit year risk adjustment models using the 2018, 2019, and 2020 benefit year enrollee-level EDGE data, with no exceptions. For the 2024 benefit year, we will continue to apply a market pricing adjustment to the plan liability associated with Hepatitis C drugs in the risk adjustment models (see, for example, 84 FR 17463 through 17466). We will also continue to maintain the CSR adjustment factors finalized in the 2019, 2020, 2021, 2022, and 2023 Payment Notices.[10]

We are finalizing the repeal of the ability under § 153.320(d) for prior participant States to request reductions of State risk adjustment transfers calculated by HHS under the State payment transfer formula in all State market risk pools for the 2025 benefit year and beyond. We are approving Alabama's requests to reduce risk adjustment State transfers in its individual and small group markets by 50 percent for the 2024 benefit year.

Additionally, we are finalizing, beginning with the 2023 benefit year, the proposal to collect and extract from issuers' EDGE servers through issuers' EDGE Server Enrollment Submission (ESES) files and risk adjustment recalibration enrollment files a new data element, a Qualified Small Employer Health Reimbursement Arrangement (QSEHRA) indicator. In addition, we are finalizing our proposal to extract the plan identifier and rating area data elements from issuers' EDGE servers for certain benefit years prior to the 2021 benefit year. We are finalizing the proposed risk adjustment user fee for the 2024 benefit year of $0.21 per member per month (PMPM).

Beginning with the 2022 benefit year HHS–RADV, we are changing the materiality threshold established under § 153.630(g)(2) for random and targeted sampling from $15 million in total annual premiums Statewide to 30,000 total billable member months (BMM) Statewide, calculated by combining an issuer's enrollment in a State's individual non-catastrophic, catastrophic, small group, and merged markets, as applicable, in the benefit year being audited.

Beginning with the 2021 benefit year of HHS–RADV, we are no longer exempting exiting issuers from adjustments to risk scores and risk adjustment transfers when they are negative error rate outliers in the applicable benefit year's HHS–RADV. Thus, we are applying HHS–RADV results to adjust the plan liability risk scores of all exiting and non-exiting issuers identified as outliers in the benefit year being audited.

Beginning with the 2022 benefit year of HHS–RADV, we announce that we are discontinuing the use of the lifelong permanent condition list and the use of non-EDGE claims in HHS–RADV. Additionally, beginning with the 2022 benefit year of HHS–RADV, we are finalizing the shortening of the window to confirm the findings of the second validation audit (SVA) (if applicable),[11] or file a discrepancy report to dispute the SVA findings, to within 15 calendar days of the notification by HHS.

We are amending the EDGE discrepancy materiality threshold set forth at § 153.710(e) to align with and mirror the policy finalized in preamble in part 2 of the 2022 Payment Notice (86 FR 24194 through 24195). That is, the materiality threshold at § 153.710(e) will be revised to provide that the amount in dispute must equal or exceed $100,000 or one percent of the total estimated transfer amount in the applicable State market risk pool, whichever is less.

2. 45 CFR part 155

In part 155, we are finalizing the revision of the Exchange Blueprint approval timelines for States transitioning from either a FFE to a SBE–FP or to a State-based Exchange (SBE), or from a SBE–FP to a SBE. We are finalizing the removal of the existing deadlines for when we provide approval, or conditional approval, on an Exchange Blueprint, and instead will require that such approval be provided at some point prior to the date on which the Exchange proposes to begin open enrollment either as a SBE or SBE–FP.

We are finalizing the proposal to address the standards applicable to Navigators and other assisters and their consumer service functions. At § 155.210(d)(8), we are finalizing the removal of the prohibition on Navigators from going door-to-door or using other unsolicited means of direct contact to provide application or enrollment assistance. This will also apply to non-Navigator assistance personnel in FFEs and in State Exchanges if funded with section 1311(a) Exchange Establishment grants, through the reference to § 155.210(d) in § 155.215(a)(2)(i). In § 155.225(g)(5), we are finalizing the removal of the prohibition on certified application counselors from going door-to-door or using unsolicited means of direct contact to provide application or enrollment assistance. We believe policies as finalized will allow Navigators and other assisters in the FFEs to help more consumers.

In part 155, we are finalizing changes to address certain agent, broker, and web-broker practices. We are finalizing the proposal to allow HHS up to an additional 15 calendar days to review evidence submitted by agents, brokers, or web-brokers to rebut allegations that led to the suspension of their Exchange agreement(s). We also are finalizing the proposal to allow HHS up to an additional 30 calendar days to review evidence submitted by agents, brokers, or web-brokers that led to the termination of their Exchange agreement(s). The amendments adopted in this final rule will provide HHS with up to 45 or 60 calendar days to review and respond to such evidence or requests for reconsideration submitted by agents, brokers, or web-brokers stemming from the suspension or termination of their Exchange agreement(s), respectively.

Further, we are finalizing the proposal to require agents, brokers, or web-brokers assisting consumers with completing eligibility applications through the FFEs and SBE–FPs or assisting an individual with applying for APTC and CSRs for QHPs to document that eligibility application information has been reviewed by and confirmed to be accurate by the consumer or their authorized representative prior to application submission. We are finalizing the proposal that the documentation will be required to include: the date the information was reviewed; the name of the consumer or their authorized representative; an explanation of the attestations at the end of the eligibility application; and the name of the assisting agent, broker, or web-broker. Furthermore, the agent, broker, or web-broker will be required to maintain the documentation for a minimum of 10 years and produce it upon request in response to monitoring, audit, and enforcement activities.

We also are finalizing the proposal to require agents, brokers, or web-brokers assisting consumers with applying and enrolling through FFEs and SBE–FPs, making updates to an existing application, or assisting an individual with applying for APTC and CSRs for QHPs to document the receipt of consent from the consumer seeking assistance or their authorized

[10] See 83 FR 16930 at 16953; 84 FR 17454 at 17478 through 17479; 85 FR 29164 at 29190; 86 FR 24140 at 24181; and 87 FR 27208 at 27235 through 27235.

[11] Only those issuers who have insufficient pairwise agreement between the Initial Validation Audit (IVA) and SVA receive SVA findings. See 84 FR 17495; 86 FR 24201.

representative prior to providing assistance. We are finalizing the proposal that the documentation will be required to include: a description of the scope, purpose, and duration of the consent provided by the consumer or their authorized representative; the date consent was given; name of the consumer or their authorized representative; the name of the agent, broker, web-broker, or agency being granted consent; and the process by which the consumer or their authorized representative may rescind consent. Further, we are finalizing the requirement that agents, brokers, or web-brokers will be required to maintain the consent documentation for a minimum of 10 years and produce it upon request in response to monitoring, audit, and enforcement activities.

We are finalizing the revisions to the failure to file and reconcile (FTR) process at § 155.305(f)(4). First, we are finalizing the proposal to amend the FTR process described in § 155.305(f)(4) so that an Exchange may only determine enrollees ineligible for APTC after a taxpayer (or a taxpayer's spouse, if married) has failed to file a Federal income tax return and reconcile their past APTC for two consecutive years (specifically, years for which tax data will be utilized for verification of household income and family size). In the proposed rule (87 FR 78256), we proposed that this policy would be effective January 1, 2024, with the intent that the proposed rule would apply to eligibility determinations made in 2024 for PY 2025 (and beyond). We are clarifying in the final rule that this will become effective on the general effective date of the final rule. Second, we are finalizing the proposal to continue to pause FTR operations until HHS and the Internal Revenue Service (IRS) will be able to implement the new FTR policy.

We are finalizing revisions to § 155.320, which will require Exchanges to accept an applicant's attestation of projected annual household income when the Exchanges request tax return data from the IRS to verify attested projected annual household income, but the IRS confirms there is no such tax return data available. Further, we are finalizing revisions to § 155.315, which will require that an enrollee with a household income inconsistency receive a 60-day extension to present satisfactory documentary evidence to resolve a data matching issue (DMI) in addition to the 90 days currently provided in § 155.315(f)(2)(ii). These changes will ensure consumers are treated equitably, ensure continuous coverage, and strengthen the risk pool.

We are finalizing amendments and additions to § 155.335(j), including the clarification that when an enrollee is determined upon annual redetermination eligible for income-based CSRs, is currently enrolled in a bronze level QHP, and would be re-enrolled in a bronze level QHP, then to the extent permitted by applicable State law, unless the enrollee terminates coverage, including termination of coverage in connection with voluntarily selecting a different QHP, in accordance with § 155.430, at the option of the Exchange, the Exchange may re-enroll such enrollee in a silver level QHP within the same product, with the same provider network, and with a lower or equivalent premium after the application of APTC as the bronze level QHP into which the Exchange would otherwise re-enroll the enrollee. We are also finalizing modifications to the proposed policy to specify that Exchanges implementing this policy may auto re-enroll enrollees from a bronze QHP to a silver QHP provided that the net monthly silver plan premium for the future year is not more than the net monthly bronze plan premiums for the future year, as opposed to comparing net monthly bronze plan premiums for the current year with future year silver plan premiums. Lastly, for enrollees whose current QHP or product will no longer be available in the coming year, we are finalizing the policy to require Exchanges to incorporate network similarity into auto re-enrollment criteria.

We are finalizing the proposed changes related to SEPs at § 155.420. First, we are finalizing two technical corrections to § 155.420(a)(4)(ii)(A) and (B) to align the text with § 155.420(a)(d)(6)(i) and (ii). The revisions will clarify that only one person in a household applying for coverage or financial assistance through the Exchange must qualify for a SEP in order for the entire household to qualify for the SEP. Second, we are finalizing the change to the current coverage effective date requirements at § 155.420(b)(2)(iv) to permit Exchanges to offer earlier coverage effective dates for consumers attesting to a future loss of MEC. This change will ensure qualifying individuals are able to seamlessly transition from other forms of coverage to Exchange coverage as quickly as possible with minimal coverage gaps.

Third, to mitigate coverage gaps, we are finalizing the proposed new rule at § 155.420(c)(6) with a modification that will give Exchanges the option to allow consumers who are eligible for a SEP under § 155.420(d)(1)(i) due to loss of Medicaid or Children's Health Insurance Program (CHIP) coverage up to 90 days after their loss of Medicaid or CHIP coverage to select a plan and enroll in coverage through the Exchange. The modification will grant an Exchange the option to provide more than 90 days to select a plan and enroll in coverage through the Exchange up to the length of the applicable Medicaid or CHIP redetermination period if the State Medicaid Agency allows or provides for a Medicaid or CHIP reconsideration period greater than 90 days. Fourth, we are finalizing § 155.420(d)(12) to align the policy of the Exchanges on the Federal platform for granting SEPs to consumers who enrolled in a plan influenced by a material plan display error with current plan display error SEP operations. The proposal will remove the burden from the consumer to solely demonstrate to the Exchange that a material plan display error has influenced the consumer's decision to purchase a QHP through the Exchange.

We are finalizing § 155.430(b)(3) to explicitly prohibit issuers participating in Exchanges on the Federal platform from terminating coverage for a dependent child prior to the end of the plan year because the dependent child has reached the applicable maximum age. This change will clarify to issuers participating in Exchanges on the Federal platform their obligation to maintain coverage for dependent children, as well as to enrollees regarding their ability to maintain coverage for dependent children. This change is optional for State Exchanges.

We are finalizing § 155.505(g), which acknowledges the ability of the CMS Administrator to review Exchange eligibility appeals decisions prior to judicial review. This change will provide appellants and other parties with accurate information about the availability of administrative review by the CMS Administrator if they are dissatisfied with their eligibility appeal decision.

We are finalizing the Improper Payment Pre-Testing and Assessment (IPPTA) program under which SBEs will be required to participate in pre-audit activities that will prepare SBEs for complying with audits required under the Payment Integrity Information Act of 2019 (PIIA). Activities under the proposed IPPTA program will provide SBEs experience helpful to preparing for future PIIA audits and will help HHS design and refine appropriate requirements for future PIIA audits of SBEs.

3. 45 CFR part 156

In part 156, after revising our projections based on newly available data that impacted enrollment projections, we are finalizing for the 2024 benefit year a user fee rate for all issuers offering QHPs through an FFE of 2.2 percent of the monthly premium charged by issuers for each policy under plans where enrollment is through an FFE, and a user fee rate for all issuers offering QHPs through an SBE–FP of 1.8 percent of the monthly premium charged by issuers for each policy under plans offered through an SBE–FP.

We are also finalizing the proposal to maintain a large degree of continuity with our approach to standardized plan options finalized in the 2023 Payment Notice, making only minor updates to each set of plan designs. In particular, for PY 2024 and subsequent PYs, we are finalizing two sets of plan designs that, in contrast to the policy finalized in the 2023 Payment Notice (87 FR 28278 through 28279), no longer include a standardized plan option for the non-expanded bronze metal level, mainly due to AV constraints.

Thus, for PY 2024 and subsequent PYs, we are finalizing revisions to § 156.201 to require issuers to offer standardized plan options for the following metal levels throughout every service area that they also offer non-standardized plan options: one bronze plan that meets the requirement to have an AV up to five percentage points above the 60 percent standard, as specified in § 156.140(c) (known as an expanded bronze plan); one standard silver plan; one version of each of the three income-based silver CSR plan variations; one gold plan; and one platinum plan.

We also will continue to differentially display standardized plan options, including those standardized plan options required under State action that took place on or before January 1, 2020, on *HealthCare.gov,* and continue enforcement of the standardized plan options display requirements for approved web-brokers and QHP issuers using a direct enrollment pathway to facilitate enrollment through an FFE or SBE–FP—including both the Classic Direct Enrollment (Classic DE) and Enhanced Direct Enrollment (EDE) Pathways.

To mitigate the risk of plan choice overload, we are finalizing § 156.202, which limits the number of non-standardized plan options that QHP issuers may offer through the Exchanges using the Federal platform to four non-standardized plan options per product network type, metal level (excluding catastrophic plans), and inclusion of dental and/or vision benefit coverage, in any service area for PY 2024, and to two non-standardized plan options per product network type, metal level (excluding catastrophic plans), and inclusion of dental and/or vision benefit coverage, in any service area for PY 2025 and subsequent PYs.

We are finalizing new § 156.210(d)(1) to require stand-alone dental plan (SADP) issuers to use an enrollee's age at the time of policy issuance or renewal (referred to as age on effective date) as the sole method to calculate an enrollee's age for rating and eligibility purposes, as a condition of QHP certification, beginning with Exchange certification for PY 2024. We believe requiring SADPs to use the age on effective date methodology to calculate an enrollee's age as a condition of QHP certification, and consequently removing the less commonly used and more complex age calculation methods, will reduce consumer confusion and promote operational efficiency. This policy will apply to Exchange-certified SADPs, whether they are sold on- or off-Exchange.

In addition, we are finalizing new § 156.210(d)(2) to require SADP issuers to submit guaranteed rates as a condition of QHP certification, beginning with Exchange certification for PY 2024. We believe this change will help reduce the risk of incorrect APTC calculation for the pediatric dental EHB portion of premiums, thereby reducing the risk of consumer harm. This policy will apply to Exchange-certified SADPs, whether they are sold on- or off-Exchange.

We are finalizing a new rule at § 156.225(c) to require that plan and plan variation marketing names for QHPs include correct information, without omission of material fact, and not include content that is misleading. We will review plan and plan variation marketing names during the annual QHP certification process in close collaboration with State regulators in States with Exchanges on the Federal platform.

We are finalizing revisions to the network adequacy and ECP standards at §§ 156.230 and 156.235 to provide that all individual market QHPs, including individual market SADPs, and all Small Business Health Options Program (SHOP) QHPs, including SHOP SADPs, across all Exchanges must use a network of providers that complies with the network adequacy and ECP standards in those sections, and to remove the exception that these sections do not apply to plans that do not use a provider network. However, we are finalizing a limited exception at § 156.230(a)(4) for certain SADP issuers that sell plans in areas where it is prohibitively difficult for the issuer to establish a network of dental providers. Specifically, under this exception, an area is considered ''prohibitively difficult'' for the SADP issuer to establish a network of dental providers based on attestations from State departments of insurance in States with at least 80 percent of their counties classified as Counties with Extreme Access Considerations (CEAC) that at least one of the following factors exists in the area of concern: a significant shortage of dental providers, a significant number of dental providers unwilling to contract with Exchange issuers, or significant geographic limitations impacting consumer access to dental providers.

To expand access to care for low-income and medically underserved consumers, we are finalizing our proposal to establish two additional stand-alone ECP categories at § 156.235(a)(2)(ii)(B) for PY 2024 and subsequent PYs, Mental Health Facilities and Substance Use Disorder Treatment Centers, and adding rural emergency hospitals (REHs) as a provider type in the Other ECP Providers category. In addition, we are finalizing our proposed revisions to § 156.235(a)(2)(i) to require QHPs to contract with at least a minimum percentage of available ECPs in each plan's service area within certain ECP categories, as specified by HHS. Specifically, we will require that QHPs contract with at least 35 percent of available Federally Qualified Health Centers (FQHCs) that qualify as ECPs in the plan's service area and at least 35 percent of available Family Planning Providers that qualify as ECPs in the plan's service area for PY 2024 and subsequent PYs. Furthermore, we are finalizing revisions to § 156.235(a)(2)(i) to clarify that these threshold requirements will be in addition to the existing provision that QHPs must satisfy the overall 35 percent ECP threshold requirement in the plan's service area. In addition, we revised § 156.235(b)(2)(i) to reflect that these policies would also affect issuers subject to the Alternate ECP Standard under § 156.235(b).

We are finalizing revisions to § 156.270(f) to require QHP issuers in Exchanges operating on the Federal platform to send enrollees a notice of payment delinquency promptly and without undue delay. Specifically, we will require QHP issuers in Exchanges operating on the Federal platform to send such notices within 10 business days of the date the issuer should have

discovered the delinquency. This requirement will help ensure that enrollees are aware they are at risk of losing coverage and can avoid losing coverage by paying any outstanding premium amounts promptly.

We are finalizing the proposal to revise the final deadline in § 156.1210(c) for issuers to report data inaccuracies identified in payment and collections reports for discovered underpayments of APTC to the issuer and user fee overpayments to HHS. Specifically, we will retain only the deadline at § 156.1210(c)(1), which requires that issuers describe all inaccuracies identified in a payment and collections report within 3 years of the end of the applicable plan year to which the inaccuracy relates to be eligible to receive an adjustment to correct an underpayment of APTC to the issuer and user fee overpayments to HHS. Under this policy, beginning with the 2015 PY coverage, we will not pay additional APTC payments or reimburse user fee payments for FFE, SBE–FP, and SBE issuers for data inaccuracies reported after the 3-year deadline. Further, for PYs 2015 through 2019, to be eligible for resolution, an issuer must describe before January 1, 2024, all inaccuracies identified in a payment and collections report for these PYs that relate to discovered underpayments to the issuer of APTC or user fee overpayments to HHS, thus allowing issuers additional time to submit and seek resolution of such inaccuracies for the 2015 through 2019 PY coverage. These policies will better align with the existing limitation under the Code on amending a Federal income tax return and reduce administrative and operational burden on issuers, State Exchanges, and HHS when handling payment and enrollment disputes.

III. Provisions of the Proposed Regulations

A. Part 153—Standards Related to Reinsurance, Risk Corridors, and Risk Adjustment

In subparts A, D, G, and H of part 153, we established standards for the administration of the risk adjustment program. The risk adjustment program is a permanent program created by section 1343 of the ACA that transfers funds from lower-than-average risk, risk adjustment covered plans to higher-than-average risk, risk adjustment covered plans in the individual, small group markets, or merged markets, inside and outside the Exchanges. In accordance with § 153.310(a), a State that is approved or conditionally approved by the Secretary to operate an Exchange may establish a risk adjustment program, or have HHS do so on its behalf.[12] We did not receive any requests from States to operate a risk adjustment program for the 2024 benefit year. Therefore, we will operate risk adjustment in every State and the District of Columbia for the 2024 benefit year.

1. Sequestration

In accordance with the OMB Report to Congress on the Joint Committee Reductions for Fiscal Year 2023, the permanent risk adjustment program is subject to the fiscal year 2023 sequestration.[13] The Federal Government's 2023 fiscal year began on October 1, 2022. Therefore, the risk adjustment program will be sequestered at a rate of 5.7 percent for payments made from fiscal year 2023 resources (that is, funds collected during the 2023 fiscal year).

HHS, in coordination with OMB, has determined that, under section 256(k)(6) of the Balanced Budget and Emergency Deficit Control Act of 1985,[14] as amended, and the underlying authority for the risk adjustment program, the funds that are sequestered in fiscal year 2023 from the risk adjustment program will become available for payment to issuers in fiscal year 2024 without further Congressional action. If Congress does not enact deficit reduction provisions that replace the Joint Committee reductions, the program will be sequestered in future fiscal years, and any sequestered funding will become available in the fiscal year following that in which it was sequestered.

Additionally, we note that the Infrastructure Investment and Jobs Act[15] amended section 251A(6) of the Balanced Budget and Emergency Deficit Control Act of 1985 and extended sequestration for the risk adjustment program through fiscal year 2031 at a rate of 5.7 percent per fiscal year.[16] [17]

We received no comments on the fiscal year 2023 sequestration rate for risk adjustment.

2. HHS Risk Adjustment (§ 153.320)

The HHS risk adjustment models predict plan liability for an average enrollee based on that person's age, sex, and diagnoses (also referred to as hierarchical condition categories (HCCs)), producing a risk score. The HHS risk adjustment methodology utilizes separate models for adults, children, and infants to account for clinical and cost differences in each age group. In the adult and child models, the relative risk assigned to an individual's age, sex, and diagnoses are added together to produce an individual risk score. Additionally, to calculate enrollee risk scores in the adult models, we added enrollment duration factors beginning with the 2017 benefit year,[18] and prescription drug categories (RXCs) beginning with the 2018 benefit year.[19] Starting with the 2023 benefit year, we added interacted HCC count factors to the adult and child models applicable to certain severity and transplant HCCs.

Infant risk scores are determined by inclusion in one of 25 mutually exclusive groups, based on the infant's maturity and the severity of diagnoses. If applicable, the risk score for adults, children, or infants is multiplied by a cost-sharing reduction (CSR) factor. The enrollment-weighted average risk score of all enrollees in a particular risk adjustment covered plan (also referred to as the plan liability risk score (PLRS)) within a geographic rating area is one of the inputs into the risk adjustment State payment transfer formula,[20] which determines the State transfer payment or charge that an issuer will receive or be required to pay for that plan for the applicable State market risk pool. Thus, the HHS risk adjustment models predict average group costs to account for risk across plans, in keeping with the Actuarial Standards Board's Actuarial

[12] See also 42 U.S.C. 18041(c)(1).

[13] OMB. (2022, March 28). OMB Report to the Congress on the BBEDCA 251A Sequestration for Fiscal Year 2023. *https://www.whitehouse.gov/wp-content/uploads/2022/03/BBEDCA_251A_Sequestration_Report_FY2023.pdf.*

[14] Public Law 99–177 (1985).

[15] Public Law 117–58, 135 Stat. 429 (2021).

[16] 2 U.S.C. 901a.

[17] The Coronavirus Aid, Relief, and Economic Security (CARES) Act previously amended section 251A(6) of the Balanced Budget and Emergency Deficit Control Act of 1985 and extended sequestration for the risk adjustment program through fiscal year 2023 at a rate of 5.7 percent per fiscal year. Section 4408 of the CARES Act, Public Law 116–136, 134 Stat. 281 (2020).

[18] For the 2017 through 2022 benefit years, there is a set of 11 binary enrollment duration factors in the adult models that decrease monotonically from one to 11 months, reflecting the increased annualized costs associated with fewer months of enrollments. See, for example, 81 FR 94071 through 94074. These enrollment duration factors were replaced beginning with the 2023 benefit year with HCC-contingent enrollment duration factors for up to 6 months in the adult models. See, for example, 87 FR 27228 through 27230.

[19] For the 2018 benefit year, there were 12 RXCs, but starting with the 2019 benefit year, the two severity-only RXCs were removed from the adult risk adjustment models. See, for example, 83 FR 16941.

[20] The State payment transfer formula refers to the part of the HHS risk adjustment methodology that calculates payments and charges at the State market risk pool level prior to the calculation of the high-cost risk pool payment and charge terms that apply beginning with the 2018 benefit year (BY). See, for example, 81 FR 94080.

Standards of Practice for risk classification.

a. Data for Risk Adjustment Model Recalibration for 2024 Benefit Year

In the HHS Notice of Benefit and Payment Parameters for 2024 proposed rule (87 FR 78206, 78214), we proposed to use 2018, 2019, and 2020 benefit year enrollee-level EDGE data to recalibrate the 2024 benefit year risk adjustment models with an exception to exclude the 2020 benefit year data from the blending of the age-sex coefficients for the adult models. However, after consideration of comments, we are not finalizing the 2024 benefit year model recalibration approach as proposed. Instead, based on our analysis and in response to comments, we are finalizing the use of 2018, 2019 and 2020 benefit year enrollee-level EDGE data for recalibration of the 2024 benefit year risk adjustment models for all model coefficients, including the adult age-sex coefficients, with no exceptions.

In accordance with § 153.320, HHS develops and publishes the risk adjustment methodology applicable in States where HHS operates the program, including the draft factors to be employed in the models for the benefit year. This includes information related to the annual recalibration of the risk adjustment models using data from the most recent available prior benefit years trended forwarded to reflect the applicable benefit year of risk adjustment.

Our proposed approach for 2024 recalibration aligns with the approach finalized in the 2022 Payment Notice (86 FR 24151 through 24155) and reiterated in the 2023 Payment Notice (87 FR 27220 through 27221), that involves use of the 3 most recent consecutive years of enrollee-level EDGE data that are available at the time we incorporate the data in the draft recalibrated coefficients published in the proposed rule for the applicable benefit year, and not updating the coefficients between the proposed and final rules if an additional year of enrollee-level EDGE data becomes available for incorporation.

We proposed to determine coefficients for the 2024 benefit year based on a blend of separately solved coefficients from the 2018, 2019, and 2020 benefit years of enrollee-level EDGE data, with an exception to exclude the 2020 benefit year data from the blending of the age-sex coefficients for the adult models. For all adult model age-sex coefficients, we proposed to use only 2018 and 2019 benefit year enrollee-level EDGE data in recalibration to account for the observed anomalous decreases in the unconstrained coefficients [21] for the 2020 benefit year enrollee-level EDGE data for older adult enrollees, especially older adult female enrollees.

To further explain, due to the potential impact of the COVID–19 PHE on costs and utilization of services in 2020, we considered whether the 2020 enrollee-level EDGE data was appropriate for use in the annual model recalibration for the HHS-operated risk adjustment program applicable to the individual and small group (including merged) markets. As part of this analysis, we considered: (1) comments received in response to the 2023 Payment Notice proposed rule (87 FR 598); (2) the current policy that involves using the 3 most recent years of EDGE data available as of the proposed rule for the annual risk adjustment model recalibration which promotes stability and ensures the models reflect the year-over-year changes to the markets' patterns of utilization and spending without over-relying on any factors unique to one particular year; and (3) our experience that every year of data can be unique and therefore some level of deviation from year to year is expected.[22] All of these general considerations weigh in favor of including the 2020 benefit year data in the recalibration of the risk adjustment models.

However, we recognized that if a benefit year has significant changes that differentially impact certain conditions or populations relative to others, or is sufficiently anomalous relative to expected future patterns of care, we should carefully consider what impact that benefit year of data could have if it is used in the annual model recalibration for the HHS-operated risk adjustment program. This includes consideration of whether to exclude or adjust that benefit year of data to increase the models' predictive validity or otherwise limit the impact of anomalous trends. The situation presented by the COVID–19 PHE and its potential impact on utilization and costs in the 2020 benefit year is an example [23] of a situation that requires this additional consideration. Thus, to help further inform our decision on whether it is appropriate to use 2020 enrollee-level EDGE data to calibrate the risk adjustment coefficients, we analyzed the 2020 benefit year enrollee-level EDGE recalibration data to assess how it compares to 2019 benefit year enrollee-level EDGE recalibration data. For more information on our analysis of the 2020 benefit year enrollee-level EDGE recalibration data see the proposed rule (87 FR 78215 through 78218). Based on this analysis, we determined that on many key dimensions, the 2019 benefit year and 2020 benefit year enrollee-level EDGE data recalibration were largely comparable. However, there were some observed anomalous decreases in the unconstrained age-sex coefficients in the 2020 benefit year data for older adult enrollees, especially older female enrollees.

With this analysis in mind, and based on the comments received in response to the 2023 Payment Notice proposed rule,[24] we outlined six different options the Department considered for handling the 2020 benefit year enrollee-level EDGE recalibration data for purposes of the annual recalibration of the HHS risk adjustment models for the 2024 benefit year.[25] Four options involved the use of 2020 benefit year enrollee-level EDGE recalibration data in the risk adjustment

[21] HHS constrains the risk adjustment models in multiple distinct ways during model recalibration. These include (1) coefficient estimation groups, also referred to as G-Groups in the Risk Adjustment Do It Yourself (DIY) Software, (2) a priori stability constraints, and (3) hierarchy violation constraints. Of these, coefficient estimation groups and a priori stability constraints are applied prior to model fitting. The hierarchy violation constraints are applied after the initial estimates of coefficients are produced. We refer to the models and coefficients prior to the application of hierarchy violation constraints as the ''unconstrained models'' and ''unconstrained coefficients,'' respectively. For a description of the various constraints we apply to the risk adjustment models, see, CMS' ''Potential Updates to HHS–HCCs for the HHS-operated Risk Adjustment Program'' (the ''2019 White Paper'') (June 17, 2019). *https://www.cms.gov/CCIIO/Resources/Regulations-and-Guidance/Downloads/Potential-Updates-to-HHS-HCCs-HHS-operated-Risk-Adjustment-Program.pdf.*

[22] Every year we expect some shifting in treatment and cost patterns, for example as new drugs come to market. Our goal in using multiple years of data for model calibration is to capture some degree of year-to-year cost shifting without over-relying on any factors unique to one particular year.

[23] In the 10 years since the start of model calibration for the HHS-operated risk adjustment program, which began with benefit year 2014, the COVID–19 PHE has been the only such situation to date. Other events and policy changes have not risen to the same level of uniqueness or potential impact.

[24] These comments offered a variety of perspectives with some commenters stating that 2020 enrollee-level EDGE data should be used for model recalibration as normal, a few commenters suggesting that 2020 enrollee-level EDGE data should be excluded entirely, one commenter recommending that 2020 enrollee-level EDGE data should be used with a different weight assigned, and several commenters suggesting HHS release a technical paper on the use of 2020 enrollee-level EDGE data, with several suggesting HHS do a comparison of coefficients with and without the 2020 enrollee-level EDGE data to review relative changes in coefficients, and evaluate changes for clinical reasonability and consistency with 2018 and 2019 enrollee-level EDGE data. See 87 FR 27220 through 27221.

[25] See 87 FR 78214 through 78218.

model recalibration, and two involved the exclusion of the 2020 benefit year data. These six options were as follows:

- *Option 1:* Maintain the current policy, recalibrating the 2024 benefit year risk adjustment models using 2018, 2019, and 2020 enrollee-level EDGE data with no exceptions or modifications.
- *Option 2:* Maintain the current policy, recalibrating the 2024 benefit year risk adjustment models using 2018, 2019, and 2020 benefit year enrollee-level EDGE recalibration data, but assign a lower weight to 2020 data.
- *Option 3:* Utilize 4 years of enrollee-level EDGE data, instead of three, to recalibrate the 2024 benefit year risk adjustment models using 2017, 2018, 2019, and 2020 benefit year data.
- *Option 4:* Maintain the current policy, recalibrating the 2024 benefit year risk adjustment models using 2018, 2019, and 2020 enrollee-level EDGE recalibration data with an exception to exclude the 2020 benefit year data from the blending of the age-sex coefficients for the adult models. Under this option, we would have determined coefficients for the 2024 benefit year based on a blend of separately solved coefficients from the 2018, 2019, and 2020 benefit years of enrollee-level EDGE recalibration data and would exclude the 2020 benefit year from the blending of the adult models' age-sex coefficients. Instead, only 2018 and 2019 benefit year enrollee-level EDGE recalibration data would be used in blending the adult risk adjustment models age-sex coefficients.
- *Option 5:* Exclude the 2020 benefit year enrollee-level EDGE recalibration data and instead use the 2017, 2018, and 2019 benefit year enrollee-level EDGE recalibration data, trended forward to the 2024 benefit year, in recalibration of the risk adjustment models for the 2024 benefit year, or use the final 2023 risk adjustment model coefficients for the 2024 benefit year without trending the data to account for inflation and changes in costs and utilization between the 2023 and 2024 benefit years.
- *Option 6:* Exclude the 2020 benefit year enrollee-level EDGE recalibration data and instead use only 2 years of enrollee-level EDGE data for recalibration—that is, use only 2018 and 2019 benefit year data to recalibrate the 2024 risk adjustment models.

As noted above, we proposed to use the 3 most recent available consecutive benefit year data sets (the 2018, 2019, and 2020 benefit year enrollee-level EDGE recalibration data), with a narrowly tailored exception to exclude the 2020 benefit year data from the blending of the age-sex coefficients for the adult models (Option 4).

After reviewing the public comments, we are finalizing the use of 2018, 2019, and 2020 enrollee-level EDGE data with no exceptions or modifications for recalibration of the risk adjustment models for the 2024 benefit year (Option 1). Consistent with prior benefit model recalibrations and the proposed adoption of Option 4 to recalibrate the HHS risk adjustment models for the 2024 benefit year, this will involve the use of the 3 most recent consecutive years of enrollee-level EDGE data that were available for the applicable benefit year and not updating the coefficients between the proposed and final rules if an additional year of enrollee-level EDGE data becomes available for incorporation. The coefficients listed in Tables 1 through 6 of this final rule reflect the use of 2018, 2019, and 2020 benefit year enrollee-level EDGE recalibration data for all coefficients, including adult age-sex coefficients, as well as the pricing adjustment for Hepatitis C drugs finalized in this final rule.[26] [27] We summarize and respond to public comments received on the proposed approach to recalibration of the HHS risk adjustment models for the 2024 benefit year below.

Comment: Several commenters supported our proposal to recalibrate the 2024 risk adjustment models with 2018, 2019, and 2020 enrollee-level EDGE data, except for the age-sex coefficients, which would be calculated by blending the age-sex coefficients from the 2018 and 2019 enrollee-level EDGE data only. One of these commenters stated that, of the options presented by HHS, Option 4 struck the best balance between maintaining HHS's established practice of recalibrating the models based on the 3 most recent years of available EDGE data while also accounting for the anomalous decreases in the age-sex coefficients observed in the 2020 benefit year enrollee-level EDGE recalibration data. Another commenter stated that using 2017, 2018, and 2019 enrollee-level EDGE data for recalibration (Option 5), or using only 2018 and 2019 enrollee-level EDGE data (Option 6) would also be reasonable approaches. One commenter supported the proposal to adopt Option 4, but generally objected to the use of age-sex factors in the HHS-operated risk adjustment program due to concerns about discrimination.

However, several commenters opposed the finalization of Option 4, objecting to the use of different data years to recalibrate different coefficients for the same benefit year of the HHS-operated risk adjustment program (that is, blending benefit year 2024 adult age-sex coefficients using 2018 and 2019 enrollee-level EDGE data, and blending all other benefit year 2024 coefficients using 2018, 2019, and 2020 enrollee-level EDGE data) on the grounds that model coefficients are interrelated, so the 2020 enrollee-level EDGE data adult age-sex coefficients that were excluded from blending had an influence during initial model fitting on 2020 enrollee-level EDGE data adult model coefficients that were used in blending. One commenter urged HHS to include 2020 enrollee-level EDGE data, but to weight that data year less than other data years (Option 2).

Several other commenters supported using the 2017, 2018, and 2019 enrollee-level EDGE data for the 2024 benefit year model recalibration (Option 5). One commenter suggested that HHS might identify fixable anomalies in the 2020 enrollee-level EDGE recalibration data prior to model fitting and then refit the models as an alternative option to use 2018, 2019 and 2020 data for all coefficients across all models.

Response: In light of our analysis and further consideration of the previously identified model recalibration options along with the benefit of interested party comments on the six options, we are finalizing the use of 2018, 2019, and 2020 enrollee-level EDGE data to recalibrate the 2024 risk adjustment models for all model coefficients, with no exceptions (Option 1). As stated in the proposed rule, although our analyses found that the 2019 and 2020 benefit year enrollee-level EDGE data were largely comparable, there were observed anomalous decreases in the unconstrained age-sex coefficients for the 2020 benefit year enrollee-level

[26] Similar to recalibration of the 2023 risk adjustment adult models and consistent with the policies adopted in the 2023 Payment Notice, the 2024 benefit year factors in this rule also reflect the removal of the mapping of hydroxychloroquine sulfate to RXC 09 (Immune Suppressants and Immunomodulators) and the related RXC 09 interactions (RXC 09 x HCC056 or 057 and 048 or 041; RXC 09 x HCC056; RXC 09 x HCC 057; RXC 09 x HCC048, 041) from the 2018 and 2019 benefit year enrollee-level EDGE data sets for purposes of recalibrating the 2024 benefit year adult models. See 87 FR 27232 through 27235. Additionally, the factors for the adult models reflect the use of the final, fourth quarter (Q4) RXC mapping document that was applicable for each benefit year of data included in the current year's model recalibration (except under extenuating circumstances that can result in targeted changes to RXC mappings). See 87 FR 27231 through 27232.

[27] The adult, child and infant models have been truncated to account for the high-cost risk pool payment parameters by removing 60 percent of costs above the $1 million threshold. We did not propose changes to the high-cost risk pool parameters for the 2024 benefit year. See 87 FR 78237. Therefore, as detailed below, we are maintaining the $1 million threshold and 60 percent coinsurance rate.

EDGE data for older adult enrollees, especially older female enrollees. Therefore, our proposed adoption of Option 4 included an exception narrowly tailored to account for the observed anomalous decreases in the unconstrained coefficients for the 2020 benefit year enrollee-level EDGE data. At the same time, as explained in the proposed rule (87 FR 78215 through 78216), our analysis generally found that the 2020 enrollee-level EDGE data were anomalous primarily in the volume and frequencies of certain types of claims, but that the relative costs of specific services, at least those associated with payment HCCs in the HHS risk adjustment models, were largely unaffected. Because the risk adjustment models predict relative costs of care for specific conditions on an enrollee-level basis and tend not to rely on overall patterns of utilization, the minimal impacts to relative costs of care for payment HCCs likewise resulted in minimal impacts on the coefficients fitted by the 2020 enrollee-level EDGE recalibration data.

Although we found anomalous trends in the adult age-sex factors, they were limited to the direction of coefficient changes. Specifically, age and sex in the adult models seemed to be predictive of whether an age-sex coefficient would go up or down with older female enrollees more likely to see a decrease in their age-sex coefficient fit to 2020 enrollee-level EDGE data relative to their age-sex coefficient fit to 2019 enrollee-level EDGE data, and younger male enrollees more likely to see an increase in the coefficient fit to 2020 data relative to the coefficient fit with 2019 data. To put these directional changes into perspective, the magnitudes of these changes were small and did not appear as anomalous when further compared to previous benefit years. Specifically, as part of our consideration of comments we further investigated these anomalies and found that:

- For the risk adjustment model coefficients from the 2016 through the 2023 benefit years, the adult age-sex factors varied in magnitude from their prior benefit year by a historic median value of 16.1 percent.
- Using only 2018 and 2019 data to blend the adult age-sex factors (as in our proposed approach, Option 4,[28]) across metal levels, the median change in magnitude between the 2023 final adult age-sex coefficients [29] and the 2024 proposed adult age-sex coefficients was 2.0 percent and the maximum change in magnitude was 12.0 percent.
- Using all 3 years of enrollee-level EDGE data (2018, 2019, and 2020), the median change in magnitude between the 2023 final adult age-sex coefficients and the 2024 adult age-sex coefficients was 3.6 percent and the maximum change in magnitude was 13.2 percent.
- The median magnitude of the differences between the proposed age-sex coefficients, and blended age-sex coefficients using 2018, 2019, and 2020 enrollee-level EDGE data [30] was 2.7 percent.

These values show that although the pattern of the direction of the changes in adult age-sex coefficients might appear to be anomalous, with older female enrollees showing more decreases than expected, the coefficients were actually more consistent between the 2023 final risk adjustment models and those proposed or explored as alternatives for the 2024 benefit year than we have seen in previous benefit years. As noted in the proposed rule (78 FR 78217), we know from our experience that every year of data can be unique and therefore some level of deviation from year to year is expected. Although the adult age-sex trends may have displayed a systematic effect such that older female enrollees were more likely to see lower coefficients, the magnitude of this effect appears very small and does not rise above what we have seen in prior year-to-year variation.

Moreover, the intent of the established policy to use the 3 most recent consecutive years of enrollee-level EDGE data for recalibration of the risk adjustment models is to provide stability within the HHS-operated risk adjustment program and minimize volatility in changes to risk scores between benefit years due to differences in the data set's underlying populations, while reflecting the most recent years' claims experience available.[31] Given that the magnitude of differences in the coefficients between separately solved models from the 2019 and 2020 enrollee-level EDGE data sets are similar in magnitude to the normal variation we see between data years, despite the initially observed anomalous trends, after review of comments and further consideration and analysis of the options presented, we now believe that the blending of 3 years of data for all coefficients, including the adult model age-sex coefficients, is the better approach for recalibration of the 2024 benefit year risk adjustment models, because we continued to find that there may not be a sufficient justification to exclude 2020 benefit year enrollee-level EDGE data in the recalibration of the risk adjustment models. Additionally, this approach will continue to serve the purpose of providing stability in risk scores by maintaining the policy to use the 3 most recent consecutive years of enrollee-level data available at the time we incorporated the data in the draft recalibrated coefficients published in the proposed rule and will update the models to reflect the most recent year's claims experience available.

Additionally, we agree with commenters and recognize there are disadvantages with Option 4 and the use of different benefit years to recalibrate the adult model age-sex coefficients because model coefficients are interdependent. For example, if the 2020 data differed from the 2019 data in that some risk had shifted from an HCC to an age-sex category for which that HCC was common, the removal of the age-sex category from blending would result in that HCC being slightly underpredicted relative to its predicted value if all three benefit years of data were used because the shifted risk would not be captured in the blended age-sex coefficient with that benefit year of data being included. Another example may include vaccinations. Costs associated with vaccinations have an impact on age-sex coefficients because they are not associated with a diagnosis that would be captured by an HCC. As such, if there were changes in the relative costs of common vaccinations between the 2019 and 2020 years of enrollee-level EDGE data, removing the 2020 enrollee-level EDGE data age-sex coefficients from blending would prevent the models from capturing these changes.

We also continue to believe that the COVID–19 PHE is an example of the type of situation that requires a close examination of the potential impact on utilization and costs to identify whether there are sufficiently anomalous trends relative to expected future patterns of care or significant changes that differentially impact certain conditions or populations relative to others that could impact the use of that benefit year in the annual recalibration of the HHS risk adjustment models. HHS intends to similarly examine 2021 enrollee-level EDGE data, which will be available for use in recalibration of the 2025 benefit

[28] See the 2024 Payment Notice proposed rule, Table 2 at 87 FR 78220.

[29] See the 2023 Benefit Year Final HHS Risk Adjustment Model Coefficients, Table 1, available at *https://www.cms.gov/files/document/2023-benefit-year-final-hhs-risk-adjustment-model-coefficients.pdf.*

[30] See the 2024 Payment Notice proposed rule, Table 1 at 87 FR 78218.

[31] For a discussion of the established policy governing the data used for the annual risk adjustment model recalibration, see 86 FR 24151 through 24155.

year HHS risk adjustment models,[32] and would propose any changes to current policies for recalibration of the models in future benefit years through notice-and-comment rulemaking.

We recognize that some commenters preferred alternative options that would use 2017, 2018, and 2019 enrollee-level EDGE data (Option 5) or only 2018 and 2019 enrollee-level EDGE data (Option 6). We remain concerned about these options, which would completely exclude 2020 enrollee-level EDGE data, because these options would result in the HHS risk adjustment models reflecting older costs and utilization trends than would be desirable. As previously stated, our analyses of the 2020 benefit year enrollee-level EDGE recalibration data found that it was largely comparable to the 2019 benefit year data set and we did not identify other major anomalous trends in our comparison of the unconstrained HCC coefficients in the 2019 and 2020 enrollee-level EDGE recalibration data sets. This raises the question about whether there is a sufficient justification to completely exclude 2020 benefit year enrollee-level EDGE data in the recalibration of the HHS risk adjustment models. Beyond the concern about using older data and the question about the justification to completely exclude 2020 benefit year data, Option 6 has the additional drawback of decreasing the stabilizing effect of using multiple years of data. As our goal in using the 3 most recent consecutive years of data that are available at the time we incorporate data to recalibrate the models and determine draft coefficients based on a blend of equally-weighted, separately solved coefficients from each year is to capture some degree of year-to-year cost shifting without over-relying on any factors unique to one particular year. When using 2 years of data under this approach, each year is weighted at 50 percent, but with 3 years of data, each year is weighted at 33.3 percent. As such, a change in a coefficient occurring in 1 year of the data that is actually included in recalibration would have a greater impact on the HHS risk adjustment model coefficients if only using 2 years of data rather than 3 years, due to the increase in the reliance of the blended coefficients on the remaining 2 years of data.

Option 2, which was supported by one commenter and would have weighted 2020 enrollee-level EDGE data less than the other two benefit years (2018 and 2019 enrollee-level EDGE data) used in recalibration while continuing to include it in the blended coefficients, would represent a middle ground between Option 1 and Option 6. However, we continue to be concerned that this approach would require identifying an appropriate weighting methodology other than the equal weighting that we generally use to blend coefficients from the 3 data years, and we do not believe there is a self-evident method of weighting 2020 data differently for this purpose. Furthermore, although Option 2 would not completely eliminate the effect of the 2020 benefit year data in all of the models for all factors (as opposed to just the age-sex factors in the adult models), this option would dampen the effect of 2020 benefit year data, raising similar concerns as Options 5 and 6 in that Option 2 would also, to some extent, prevent the models from reflecting changes in utilization and cost of care that are unrelated to the impact of the COVID–19 PHE.

Regarding the recommendation to identify and address fixable anomalies in the underlying data and then refit the models using the modified data, we do not believe this recommendation is feasible or prudent. Although it may be possible to identify an increase or a decrease in the frequency of particular diagnosis or service codes, these checks and procedures do not presently allow HHS to identify whether a diagnosis or service code on a given enrollee's record was directly attributable to the COVID–19 PHE. We are also presently unable to determine whether an enrollee had care deferred due to office closures or other logistical issues or what care would have been provided in the absence of the PHE. We generally consider this sort of enrollee-level adjustment to be out of scope for model calibration unless there is a clear data error. As such, we generally[33] use the data as is, with only some basic trending assumptions[34] to ensure the costs are measured for the year in which the coefficients will be used. Furthermore, as previously stated, the HHS risk adjustment models rely more on relative cost of care for a given diagnosis than they do on how many such diagnoses are present in the underlying data.

Regarding the general concerns about use of age-sex factors in the HHS risk adjustment models, HHS takes very seriously our obligation to protect individuals from discrimination and generally disagrees that the use of these factors in risk adjustment is inappropriate. Consistent with section 1343 of the ACA, the HHS-operated risk adjustment program reduces the incentives for issuers to avoid higher-than-average risk enrollees, such as those with chronic conditions, by using charges collected from issuers that attract lower-than-average risk enrollees to provide payments to health insurance issuers that attract higher-than-average risk enrollees. The ACA also prohibits issuers from establishing or charging premiums on the basis of sex,[35] and limits issuers ability to do so on the basis of age.[36] However, the cost of care for and actuarial risk of enrollees is, in part, predicted by their age and sex. As such, without the inclusion of age-sex factors in the HHS risk adjustment models, some issuers would be incentivized to design plans that are less attractive to potential enrollees whose age-sex category is predicted to create a higher liability for the issuer. The age-sex factors in the HHS risk adjustment models help alleviate this incentive by ensuring issuers whose enrollees' actuarial risk is greater than the average actuarial risk of all enrollees in the State market risk pool, such as issuers that enroll a higher-than-average proportion of enrollees who fall into a high-cost age-sex category, are appropriately compensated. The use of age and sex factors in the HHS risk adjustment models is therefore necessary, appropriate, and helps reduce the likelihood that discrimination based on age or sex will occur with respect to health insurance coverage issued or renewed in the individual and small group (including merged) markets.

After review of comments and further consideration of the options presented, for the reasons outlined above, we are finalizing adoption of Option 1 for recalibrating the HHS risk adjustment models for the 2024 benefit year. The

[32] Consistent with the policies finalized in the 2022 Payment Notice, use of the 3 most recent consecutive years of enrollee-level EDGE data would result in the use of 2019, 2020, and 2021 enrollee-level EDGE data for recalibration of the 2024 benefit year models; the use of 2020, 2021, and 2022 enrollee-level EDGE data for recalibration of the 2025 benefit year models; and the use of 2021, 2022, and 2023 enrollee-level EDGE data for recalibration of the 2026 benefit year models. See 86 FR 24151 through 24155.

[33] As previously stated in the March 2016 Risk Adjustment Methodology White Paper (March 24, 2016; available at *https://www.cms.gov/CCIIO/Resources/Forms-Reports-and-Other-Resources/Downloads/RA-March-31-White-Paper-032416.pdf*), we exclude enrollees with capitated claims from the recalibration sample due to concerns that methods for computing and reporting derived amounts from capitated claims would not result in reliable data for recalibration or analysis. See also 87 FR 27227.

[34] These trending assumptions include the pricing adjustment for Hepatitis C drugs. See 84 FR 17463 through 17466. See also 87 FR 78218.

[35] See section 2701 of the Public Health Service Act (42 U.S.C. 300gg) as amended by section 1201 of the ACA.

[36] Ibid. See also the Market Rules and Rate Review final rule (78 FR 13411 through 13413).

model coefficients for the 2024 benefit year listed in Tables 1 through 6 of this final rule are based on a blend of equally-weighted, separately solved coefficients from the 2018, 2019, and 2020 benefit years of enrollee-level EDGE data for all coefficients.[37] [38] [39]

Comment: Several commenters were concerned about some of the proposed RXC adult model coefficients, in particular RXCs 1 (Anti-HIV Agents), 8 (Multiple Sclerosis Agents), and 9 (immune suppressants and immunomodulators), for which the majority of filled prescriptions fall into the category of specialty drugs. As a result, many of these commenters supported Option 5, described above, for addressing 2020 enrollee-level EDGE data in model recalibration and recommended that the 2017, 2018 and 2019 enrollee-level EDGE data not be trended forward to the 2024 benefit year (that is, that HHS should use the 2023 final model coefficients for the 2024 benefit year). These commenters also requested that HHS publish additional information on these coefficients, including the separately solved model coefficients from each data year, the trending methodology, and how these trend factors were applied as part of the 2024 benefit year risk adjustment model recalibration. Some of these commenters questioned whether the changes for these coefficients were due to anomalies in the 2020 enrollee-level EDGE data or, as others suggested, if the changes may be due to the trending methodology applied. One of these commenters suggested different trend factors may need to be applied differently for different RXCs, noting that market patterns for non-RXC specialty drugs may not align with market patterns for specialty drugs included in the affected RXCs.

Response: We are finalizing the RXC coefficients as proposed because we believe the 2024 risk adjustment models' RXCs are accurately predicting the costs of RXCs in the market for the applicable benefit year. Although there are RXC coefficients changes between the 2023 and 2024 benefit year models, these changes are not due to anomalies in the 2020 enrollee-level EDGE data and are of a similar magnitude to RXC changes found in previous benefit years. The change in these RXC coefficients relative to the previous benefit year are due to decisions HHS made in trending costs for traditional and specialty drugs, as suggested by some commenters.

To explain, we analyzed separately solved model coefficients from each data year used in the proposed 2024 risk adjustment model recalibration and found that all 3 data years used for 2024 model recalibration exhibited similar changes in these RXC coefficients. This indicates that the 2020 enrollee-level EDGE data (or any potential anomalies related to that data year) were not driving the decrease. Although we understand the importance of transparency, we do not believe it is necessary to release the separately solved model coefficients from each data year.

However, we appreciate it is important to share more information about the RXC coefficients identified by commenters and generally note that, between benefit years, the RXC coefficients are typically less stable than HCC coefficients in the HHS risk adjustment models due to smaller sample sizes than their corresponding HCC coefficients, and multicollinearity with HCC coefficients and HCC–RXC interaction factors. In addition, as part of our consideration of these comments and to investigate whether the 2020 enrollee-level EDGE data coefficients for these three RXCs were substantially different from the 2018 and 2019 years of enrollee-level EDGE data coefficients, we engaged in a further analysis of the differences between coefficients solved from each year of enrollee-level EDGE data (2018, 2019, and 2020 enrollee-level EDGE data) for these three RXCs and found:

- In the HHS risk adjustment adult model coefficients from the 2018 through the 2023 benefit years, across the five metal levels, the distance between RXC coefficient values from the 2 most dissimilar data years used in the annual model recalibration for RXC 1 have ranged between 9.2 percent and 40.7 percent. Across the five metal levels, the median distance between RXC 1 coefficients from the 2 most dissimilar data years for the 2024 benefit year risk adjustment adult models is 30.9 percent.
- For RXC 8, the distance between values from the 2 most dissimilar data years used in the annual model recalibration for this adult model coefficient across the 2018 through 2023 benefit years ranged from between 5.1 percent and 28.4 percent, with the median value for the 2024 benefit year risk adjustment adult models at 7.0 percent across metal levels.
- For RXC 9, the range of distance between values from the 2 most dissimilar data years used in the annual model recalibration for this adult model coefficient across the 2018 through 2023 benefit years has fallen between 1.6 percent and 60.1 percent, with the median value for the proposed and final 2024 risk adjustment adult models at 4.7 percent across the five metal levels.

Although coefficients for these three RXCs decreased between the 2023 and 2024 benefit year risk adjustment adult models, the similarity of the coefficients among the 3 data years used to fit the 2024 benefit year risk adjustment models and the consistency of the dispersion between data years with the range of dispersion observed for previous benefit years' HHS risk adjustment models demonstrates that these decreases are not due to any anomalous patterns in the 2020 enrollee-level EDGE data. As noted above, in past benefit years, we have attributed the lower level of stability among RXC and RXC–HCC interaction factors to the high level of collinearity between these variables. Due to their close association with one another, the models may fit coefficients that divide risk between an interaction factor and its related RXC and HCC(s) differently for different years of enrollee-level EDGE data.

However, the change in these RXC coefficients relative to the previous benefit year are due to decisions we made in trending costs for traditional and specialty drugs, as suggested by some commenters, which have been trended separately from medical expenditures since the 2017 benefit year.[40] More specifically, in our annual assessment of the trending factors for the 2024 HHS risk adjustment models, we determined that the trend factors used for specialty drugs was higher than the market data supported. Therefore,

[37] The coefficients listed in Tables 1 through 6 of this final rule also reflect the pricing adjustment for Hepatitis C drugs finalized in this rule. In addition, the factors in this rule also reflect the removal of the mapping of hydroxychloroquine sulfate to RXC 09 (Immune Suppressants and Immunomodulators) and the related RXC 09 interactions (RXC 09 x HCC056 or 057 and 048 or 041; RXC 09 x HCC056; RXC 09 x HCC 057; RXC 09 x HCC048, 041) from the 2018 and 2019 benefit year enrollee-level EDGE data sets for purposes of recalibrating the 2024 benefit year adult models. See 87 FR 27232 through 27235. Additionally, the factors for the adult models reflect the use of the final, fourth quarter (Q4) RXC mapping document that was applicable for each benefit year of data included in the current year's model recalibration (except under extenuating circumstances that can result in targeted changes to RXC mappings). See 87 FR 27231 through 27232.

[38] The adult, child and infant models have also been truncated to account for the high-cost risk pool payment parameters by removing 60 percent of costs above the $1 million threshold.

[39] Starting with the 2024 risk adjustment adult models, HHS will group HCC 18 Pancreas Transplant Status and CC 83 Kidney Transplant Status/Complications to reflect that these transplants frequently co-occur for clinical reasons and to reduce volatility of coefficients across benefit years due to the small sample size of HCC 18. This change will also be reflected in the DIY Software for the 2024 benefit year.

[40] See 81 FR 12218.

for the 2024 benefit year, we used trend factors for specialty drugs that aligned with the market data rather than continuing the historical, higher trend factors. In determining these trend factors, we consulted our actuarial experts, reviewed relevant Unified Rate Review Template (URRT) submission data, analyzed multiple years of enrollee-level EDGE data, and consulted National Health Expenditure Accounts (NHEA) data as well as external reports and documents [41] published by third parties. In this process, we also ensured that the trends we use reflect changes in cost of care rather than gross growth in expenditures. As such, we believe the trend factors we used for specialty drugs are appropriate for the most recent trends we have seen in the market and the proposed RXC coefficient values that we finalize in this rule reflect the appropriate amount of growth between the data years used to fit the model and the 2024 benefit year. As part of our annual model recalibration activities, we intend to continue to reassess the trend factors used to update the HHS risk adjustment models in future benefit years. Consistent with § 153.320(b)(1), we will also continue to include and solicit comments on the draft model factors to be employed in the HHS risk adjustment models for a given benefit year, including but not limited to the proposed coefficients, as part of the applicable benefit year's Payment Notice proposed rule.

b. Pricing Adjustment for the Hepatitis C Drugs

In the HHS Notice of Benefits and Payment Parameters for 2024 proposed rule (87 FR 78206, 78218), for the 2024 benefit year, we proposed to continue applying a market pricing adjustment to the plan liability associated with Hepatitis C drugs in the risk adjustment models.[42]

Since the 2020 benefit year risk adjustment models, we have been making a market pricing adjustment to the plan liability associated with Hepatitis C drugs to reflect future market pricing prior to solving for coefficients for the models.[43] The purpose of this market pricing adjustment is to account for significant pricing changes associated with the introduction of new and generic Hepatitis C drugs between the data years used for recalibrating the models and the applicable recalibration benefit year.[44]

We have committed to reassessing this pricing adjustment with additional years of enrollee-level EDGE data, as data become available. As part of the 2024 benefit year model recalibration, we reassessed the cost trend for Hepatitis C drugs using available enrollee-level EDGE data (including 2020 benefit year data) to consider whether the adjustment was still needed and if it is still needed, whether it should be modified. We found that the data for the Hepatitis C RXC that will be used for the 2024 benefit year recalibration [45] still do not account for the significant pricing changes due to the introduction of new Hepatitis C drugs, and therefore, do not precisely reflect the average cost of Hepatitis C treatments applicable to the benefit year in question.

Specifically, generic Hepatitis C drugs did not become available on the market until 2019, and we proposed to use 2018 benefit year EDGE data in the 2024 benefit year model recalibration.[46] Due to the lag between the data years used to recalibrate the risk adjustment models and the applicable benefit year of risk adjustment, as well as the expectation that the costs for Hepatitis C drugs will not increase at the same rate as other drug costs between the data year and the applicable benefit year of risk adjustment, we do not believe that the trends used to reflect growth in the cost of prescription drugs due to inflation and related factors for recalibrating the models will appropriately reflect the average cost of Hepatitis C treatments expected in the 2024 benefit year. Therefore, we continue to believe a market pricing adjustment specific to Hepatitis C drugs in our models for the 2024 benefit year is necessary to account for the significant pricing changes associated with the introduction of new and generic Hepatitis C drugs between the data years used for recalibrating the models and the applicable recalibration benefit year. As noted in the proposed rule, we intend to continue to assess this pricing adjustment in future benefit year recalibrations using additional years of enrollee-level EDGE data.

We sought comment on this proposal. After reviewing the public comments, we are finalizing this proposal to continue applying a market pricing adjustment to the plan liability associated with Hepatitis C drugs in the 2024 benefit year HHS risk adjustment models as proposed. We summarize and respond to public comments received on the proposed pricing adjustment for Hepatitis C drugs below.

Comment: Most commenters supported the continued use of the pricing adjustment for Hepatitis C drugs with one commenter stating that the proposed Hepatitis C pricing adjustment seems reasonably well calibrated to reduce the incentives for issuers to create discriminatory plans that would drive away enrollees with Hepatitis C.

Some commenters expressed concern about the Hepatitis C pricing adjustment. These commenters cautioned against reducing the Hepatitis C RXC coefficient more than the expected decrease in cost as that may incentivize issuers to reduce the availability of treatment. These commenters were also concerned about undercompensating issuers for enrollees with serious chronic conditions, which they stated would incentivize issuers to avoid these enrollees. One commenter asserted that the professional independence and ethical standards of providers would prevent providers from prescribing drugs that they did not believe were medically necessary and appropriate, reducing the potential for issuers to game the program.

Response: We believe that continuing to apply the Hepatitis C pricing adjustment in the 2024 benefit year HHS risk adjustment models is appropriate at this time. This pricing adjustment will help avoid perverse incentives and will

[41] See for example, ''How much is health spending expected to grow?'' by the Peterson-Kaiser Family Foundation, available at *https://www.healthsystemtracker.org/chart-collection/how-much-is-health-spending-expected-to-grow/.* See also ''Medical cost trend: Behind the numbers 2022'' by PwC Health Research Institute, available at *https://www.pwc.com/us/en/industries/health-industries/library/assets/pwc-hri-behind-the-numbers-2022.pdf.* See also, ''MBB health trends'' by MercerMarsh Benefits, available at *https://www.mercer.com/content/dam/mercer/attachments/private/gl-2022-mmb-health-trends-report.pdf.*

[42] See for example, 84 FR 17463 through 17466.

[43] The Hepatitis C drugs market pricing adjustment to plan liability is applied for all enrollees taking Hepatitis C drugs in the data used for recalibration.

[44] Silseth, S., & Shaw, H. (2021). Analysis of prescription drugs for the treatment of hepatitis C in the United States. Milliman White Paper. *https://www.milliman.com/-/media/milliman/pdfs/2021-articles/6-11-21-analysis-prescription-drugs-treatment-hepatitis-c-us.ashx.*

[45] As detailed above, we are finalizing that we will use 2018, 2019 and 2020 enrollee-level EDGE data for recalibration of the 2024 benefit year HHS risk adjustment models, with no exceptions. However, for the proposed rule, we also assessed 2017 enrollee-level EDGE data in the event one of the alternative proposals regarding use of 2020 enrollee-level EDGE data were to be adopted.

[46] See Miligan, J, (2018). A perspective from our CEO: Gilead Subsidiary to Launch Authorized Generics to Treat HCV. Gilead. *https://www.gilead.com/news-and-press/company-statements/authorized-generics-for-hcv.* See also AbbVie. (2017). AbbVie Receives U.S. FDA Approval of MAVYRET™ (glecaprevir/pibrentasvir) for the Treatment of Chronic Hepatitis C in All Major Genotypes (GT 1–6) in as Short as 8 Weeks. Abbvie. *https://news.abbvie.com/news/abbvie-receives-us-fda-approval-mavyret-glecaprevirpibrentasvir-for-treatment-chronic-hepatitis-c-in-all-major-genotypes-gt-1-6-in-as-short-as-8-weeks.htm.*

lead to Hepatitis C RXC coefficients that better reflect anticipated actual 2024 benefit year plan liability associated with Hepatitis C drugs. Specifically, the purpose of the Hepatitis C pricing adjustment is to address the significant pricing changes associated with the introduction of new and generic Hepatitis C drugs between the data years used for recalibrating the models and the applicable recalibration benefit year that present a risk of creating perverse incentives by overcompensating issuers. We reassessed the pricing adjustment for the Hepatitis C RXC for the 2024 benefit year model recalibration and found that the data used for the 2024 benefit year risk adjustment model recalibration (that is, 2018, 2019, and 2020 enrollee-level EDGE data) still do not account for the significant pricing changes that we have observed for the Hepatitis C drugs due to the introduction of newer and cheaper Hepatitis C drugs. Therefore, the data that will be used to recalibrate the models needs to be adjusted because it does not precisely reflect the average cost of Hepatitis C treatments expected in the 2024 benefit year.

In making this determination, we consulted our clinical and actuarial experts, and analyzed the most recent enrollee-level EDGE data available to further assess the changing costs associated with Hepatitis C enrollees. Due to the high cost of these drugs reflected in the 2018, 2019, and 2020 enrollee-level EDGE data, without a pricing adjustment to plan liability, issuers would be overcompensated for the Hepatitis C RXC in the 2024 benefit year, and issuers could be incentivized to encourage overprescribing practices and game risk adjustment such that their risk adjustment payment is increased or risk adjustment charge is decreased. We also recognize concerns that applying a pricing adjustment that would reduce the coefficient for the Hepatitis C RXC by more than the expected decrease in costs could incentivize issuers to reduce the availability of the treatment. However, we believe that the Hepatitis C pricing adjustment we are finalizing accurately captures the costs of Hepatitis C drugs for the 2024 benefit year using the most recently available data, balances the need to deter gaming practices with the need to ensure that issuers are adequately compensated, and does not undermine recent progress in the treatment of Hepatitis C. Nevertheless, we intend to continue to reassess this pricing adjustment as part of future benefit years' model recalibrations using additional years of available enrollee-level EDGE data.

We appreciate commenters' concerns about undercompensating issuers for enrollees with serious chronic conditions. We note that HHS, in the 2023 Payment Notice (87 FR 27221 through 27230), finalized several risk adjustment model changes to address the adult and child models' underprediction for enrollees with many HCCs. Specifically, we finalized the interacted HCC counts and HCC-contingent enrollment duration factor model specifications to improve model prediction for the higher risk enrollees and ensure that issuers are being accurately compensated for these enrollees. As such, the potential for underprediction or overprediction in the HHS risk adjustment models is an area that we are consistently monitoring and addressing as needed and will continue to monitor and address in the future as part of our ongoing efforts to continually improve the HHS risk adjustment models.

Additionally, we recognize the important role that the ethical standards of providers play in preventing overprescribing of drugs that they do not believe are medically necessary and appropriate, but we believe that the Hepatitis C pricing adjustment is the most effective way to protect against perverse incentives that could affect prescribing patterns.

Comment: One commenter urged HHS to expand the pricing adjustment to other drugs, noting that biosimilar versions of *adalimumab* (Humira®), a drug that is currently classified in RXC 9 *Immune suppressants and Immunomodulators* in the adult risk adjustment models, will soon enter the market and the logic for applying a market pricing adjustment to the plan liability associated with Hepatitis C drugs may be extended to these biosimilar drugs.

Response: We did not propose or solicit comments on extending a pricing adjustment to drugs treating conditions other than Hepatitis C. As such, at this time, we will not be finalizing any pricing adjustments for the RXC 9 drug *adalimumab* or other specialty drugs with alternatives (whether generic or biosimilar) entering the market in the coming year. In the 2023 Payment Notice (87 FR 27231 through 27235), we explained our criteria for inclusion and exclusion of drugs in RXC mapping and recalibration. We stated that in extenuating circumstances where HHS believes there will be a significant impact from a change in an RxNorm Concept Unique Identifiers (RXCUI) to RXC mapping, such as: (1) evidence of significant off-label prescribing (as was the case with hydroxychloroquine sulfate);[47] (2) abnormally large changes in clinical indications or practice patterns associated with drug usage; or (3) certain situations in which the cost of a drug (or biosimilars) become much higher or lower than the typical cost of drugs in the same prescription drug category, HHS will consider whether changes to the RXCUI to RXC mapping from the applicable data year crosswalk (or, in this case, pricing adjustments) are needed for future benefit year recalibrations.

Although making a pricing adjustment due to the introduction of new drugs in a market is not the same as adjusting the RXC mappings, we take a similar approach in considering whether a pricing adjustment for new drugs in a market is needed. We do not believe there is evidence at this time that the introduction of biosimilar alternatives to *adalimumab* will create market patterns that meet any of these three criteria. Our current understanding is that the biosimilar alternatives to *adalimumab* entering the market are not analogous to the generic versions of drugs used to treat Hepatitis C. Biosimilars, in general, differ from common generic drugs and their market behaviors are expected to be distinct. Because biosimilars are made from living material (which is not the case with common generic drugs), they differ in their interchangeability and manufacturing cost savings from common generics.[48] Furthermore, although costs are expected to be lower for *adalimumab* biosimilars due to lower costs of development, the nature of the different production process for biologic drugs means that the price reductions are expected to be much smaller with biosimilars than we see with the introduction of generic medications.[49] As such, we also do not believe that the costs and prescribing patterns of *adalimumab* (and its biosimilars) will be much higher or lower than the typical cost of drugs in the same prescription drug category in the near future. Nevertheless, we will continue to monitor the prescription drug market as part of our ongoing efforts to continually improve the HHS risk adjustment models.

[47] See, for example, 86 FR 24180.

[48] See *https://www.uspharmacist.com/article/biosimilars-not-simply-generics.* See also *https://www.goodrx.com/humira/biosimilars.*

[49] See *https://www.reuters.com/business/healthcare-pharmaceuticals/abbvies-humira-gets-us-rival-costs-could-stay-high-2023-01-31/.* See also *https://info.goodrootinc.com/download-our-biosimilars-white-paper.*

c. Request for Information: Payment HCC for Gender Dysphoria

In the HHS Notice of Benefit and Payment Parameters for 2024 proposed rule (87 FR 78219), HHS requested information on adding a payment HCC for gender dysphoria to the HHS risk adjustment models for future benefit years. We thank commenters for their feedback and will take these comments into consideration if we pursue this potential risk adjustment model update for future benefit years through notice-and-comment rulemaking.

d. List of Factors To Be Employed in the Risk Adjustment Models (§ 153.320)

We are finalizing the 2024 benefit year risk adjustment model factors resulting from the equally weighted (averaged) blended factors from separately solved models using the 2018, 2019, and 2020 enrollee-level EDGE data in Tables 1 through 6. The adult, child, and infant models have been truncated to account for the high-cost risk pool payment parameters by removing 60 percent of costs above the $1 million threshold.[50] Table 1 contains factors for each adult model, including the age-sex, HCCs, RXCs, RXC–HCC interactions, interacted HCC counts, and enrollment duration coefficients. Table 2 contains the factors for each child model, including the age-sex, HCCs, and interacted HCC counts coefficients. Table 3 lists the HHS–HCCs selected for the interacted HCC counts factors that apply to the adult and child models. Table 4 contains the factors for each infant model. Tables 5 and 6 contain the HCCs included in the infant models' maturity and severity categories, respectively.

[50] We did not propose changes to the high-cost risk pool parameters for the 2024 benefit year. Therefore, we will maintain the $1 million threshold and 60 percent coinsurance rate.

BILLING CODE 4120–01–P

TABLE 1: Adult Risk Adjustment Model Factors for the 2024 Benefit Year

HCC or RXC No.	Factor	Platinum	Gold	Silver	Bronze	Catastrophic
Demographic Factors						
	Age 21-24, Male	0.189	0.121	0.080	0.052	0.051
	Age 25-29, Male	0.192	0.120	0.078	0.049	0.047
	Age 30-34, Male	0.223	0.145	0.097	0.062	0.061
	Age 35-39, Male	0.244	0.159	0.105	0.065	0.064
	Age 40-44, Male	0.280	0.189	0.129	0.083	0.082
	Age 45-49, Male	0.309	0.211	0.147	0.097	0.095
	Age 50-54, Male	0.391	0.284	0.213	0.157	0.155
	Age 55-59, Male	0.441	0.325	0.246	0.185	0.183
	Age 60-64, Male	0.493	0.366	0.279	0.211	0.209
	Age 21-24, Female	0.286	0.186	0.121	0.075	0.073
	Age 25-29, Female	0.307	0.199	0.129	0.078	0.076
	Age 30-34, Female	0.373	0.257	0.180	0.122	0.120
	Age 35-39, Female	0.440	0.317	0.234	0.172	0.170
	Age 40-44, Female	0.497	0.368	0.279	0.210	0.207
	Age 45-49, Female	0.501	0.368	0.276	0.201	0.198
	Age 50-54, Female	0.544	0.407	0.309	0.230	0.227
	Age 55-59, Female	0.512	0.376	0.278	0.199	0.196
	Age 60-64, Female	0.511	0.372	0.271	0.190	0.188
Diagnosis Factors						
HCC001	HIV/AIDS	0.610	0.495	0.426	0.382	0.380
HCC002	Septicemia, Sepsis, Systemic Inflammatory Response Syndrome/Shock	9.632	9.382	9.265	9.203	9.202
HCC003	Central Nervous System Infections, Except Viral Meningitis	8.965	8.831	8.747	8.678	8.675
HCC004	Viral or Unspecified Meningitis	8.914	8.769	8.675	8.592	8.589
HCC006	Opportunistic Infections	8.576	8.501	8.427	8.333	8.329
HCC008	Metastatic Cancer	24.525	24.081	23.916	23.899	23.899
HCC009	Lung, Brain, and Other Severe Cancers, Including Pediatric Acute Lymphoid Leukemia	13.190	12.873	12.733	12.672	12.670
HCC010	Non-Hodgkin Lymphomas and Other Cancers and Tumors	6.042	5.834	5.716	5.631	5.628
HCC011	Colorectal, Breast (Age < 50), Kidney, and Other Cancers	3.876	3.663	3.536	3.439	3.436
HCC012	Breast (Age 50+) and Prostate Cancer, Benign/Uncertain Brain Tumors, and Other Cancers and Tumors	2.622	2.463	2.358	2.273	2.271
HCC013	Thyroid Cancer, Melanoma, Neurofibromatosis, and Other Cancers and Tumors	1.054	0.935	0.827	0.717	0.714
HCC018[a]	Pancreas Transplant Status	7.002	6.831	6.765	6.687	6.672
HCC019	Diabetes with Acute Complications	0.295	0.237	0.189	0.146	0.144
HCC020	Diabetes with Chronic Complications	0.295	0.237	0.189	0.146	0.144
HCC021	Diabetes without Complication	0.295	0.237	0.189	0.146	0.144
HCC022	Type 1 Diabetes Mellitus, add-on to Diabetes HCCs 19-21	0.380	0.339	0.303	0.234	0.231
HCC023	Protein-Calorie Malnutrition	11.879	11.731	11.645	11.587	11.585
HCC026	Mucopolysaccharidosis	27.187	26.955	26.857	26.834	26.834

HCC or RXC No.	Factor	Platinum	Gold	Silver	Bronze	Catastrophic
HCC027	Lipidoses and Glycogenosis	27.187	26.955	26.857	26.834	26.834
HCC029	Amyloidosis, Porphyria, and Other Metabolic Disorders	6.954	6.830	6.758	6.702	6.700
HCC030	Adrenal, Pituitary, and Other Significant Endocrine Disorders	1.446	1.351	1.278	1.204	1.201
HCC034	Liver Transplant Status/Complications	6.481	6.531	6.579	6.647	6.649
HCC035_1[b]	Acute Liver Failure/Disease, Including Neonatal Hepatitis	7.706	7.500	7.402	7.365	7.367
HCC035_2	Chronic Liver Failure/End-Stage Liver Disorders	2.506	2.315	2.223	2.167	2.166
HCC036	Cirrhosis of Liver	0.706	0.607	0.537	0.466	0.463
HCC037_1	Chronic Viral Hepatitis C	0.528	0.451	0.389	0.324	0.322
HCC037_2	Chronic Hepatitis, Except Chronic Viral Hepatitis C	0.528	0.451	0.389	0.324	0.322
HCC041	Intestine Transplant Status/Complications	11.558	11.539	11.535	11.546	11.546
HCC042	Peritonitis/Gastrointestinal Perforation/Necrotizing Enterocolitis	11.889	11.691	11.610	11.582	11.581
HCC045	Intestinal Obstruction	5.323	5.085	4.970	4.891	4.890
HCC046	Chronic Pancreatitis	2.842	2.639	2.547	2.497	2.497
HCC047	Acute Pancreatitis	2.842	2.624	2.517	2.427	2.425
HCC048	Inflammatory Bowel Disease	0.469	0.365	0.266	0.146	0.142
HCC054	Necrotizing Fasciitis	9.611	9.426	9.345	9.332	9.332
HCC055	Bone/Joint/Muscle Infections/Necrosis	5.113	4.911	4.827	4.805	4.804
HCC056	Rheumatoid Arthritis and Specified Autoimmune Disorders	1.073	0.964	0.876	0.795	0.792
HCC057	Systemic Lupus Erythematosus and Other Autoimmune Disorders	0.467	0.376	0.280	0.173	0.168
HCC061	Osteogenesis Imperfecta and Other Osteodystrophies	2.273	2.113	2.012	1.922	1.919
HCC062	Congenital/Developmental Skeletal and Connective Tissue Disorders	2.273	2.113	2.012	1.922	1.919
HCC063	Cleft Lip/Cleft Palate	1.395	1.258	1.174	1.102	1.100
HCC066	Hemophilia	74.006	73.673	73.537	73.513	73.514
HCC067	Myelodysplastic Syndromes and Myelofibrosis	12.434	12.293	12.226	12.181	12.177
HCC068	Aplastic Anemia	12.434	12.293	12.226	12.181	12.177
HCC069	Acquired Hemolytic Anemia, Including Hemolytic Disease of Newborn	12.434	12.293	12.226	12.181	12.177
HCC070	Sickle Cell Anemia (Hb-SS)	2.115	2.003	1.925	1.852	1.849
HCC071	Beta Thalassemia Major	2.115	2.003	1.925	1.852	1.849
HCC073	Combined and Other Severe Immunodeficiencies	4.051	3.941	3.879	3.832	3.831
HCC074	Disorders of the Immune Mechanism	4.051	3.941	3.879	3.832	3.831
HCC075	Coagulation Defects and Other Specified Hematological Disorders	2.211	2.111	2.041	1.976	1.974
HCC081	Drug Use with Psychotic Complications	1.844	1.675	1.544	1.399	1.394
HCC082	Drug Use Disorder, Moderate/Severe, or Drug Use with Non-Psychotic Complications	1.844	1.675	1.544	1.399	1.394

HCC or RXC No.	Factor	Platinum	Gold	Silver	Bronze	Catastrophic
HCC083	Alcohol Use with Psychotic Complications	1.046	0.902	0.803	0.704	0.701
HCC084	Alcohol Use Disorder, Moderate/Severe, or Alcohol Use with Specified Non-Psychotic Complications	1.046	0.902	0.803	0.704	0.701
HCC087_1	Schizophrenia	2.423	2.222	2.100	1.990	1.988
HCC087_2	Delusional and Other Specified Psychotic Disorders, Unspecified Psychosis	2.407	2.208	2.086	1.969	1.966
HCC088	Major Depressive Disorder, Severe, and Bipolar Disorders	1.097	0.972	0.866	0.752	0.748
HCC090	Personality Disorders	0.777	0.675	0.568	0.452	0.448
HCC094	Anorexia/Bulimia Nervosa	2.296	2.160	2.060	1.969	1.965
HCC096	Prader-Willi, Patau, Edwards, and Autosomal Deletion Syndromes	8.822	8.772	8.724	8.674	8.671
HCC097	Down Syndrome, Fragile X, Other Chromosomal Anomalies, and Congenital Malformation Syndromes	1.212	1.128	1.063	1.003	1.001
HCC102	Autistic Disorder	0.871	0.770	0.669	0.571	0.567
HCC103	Pervasive Developmental Disorders, Except Autistic Disorder	0.777	0.675	0.568	0.452	0.448
HCC106	Traumatic Complete Lesion Cervical Spinal Cord	9.999	9.801	9.692	9.611	9.609
HCC107	Quadriplegia	9.999	9.801	9.692	9.611	9.609
HCC108	Traumatic Complete Lesion Dorsal Spinal Cord	7.110	6.939	6.841	6.758	6.756
HCC109	Paraplegia	7.110	6.939	6.841	6.758	6.756
HCC110	Spinal Cord Disorders/Injuries	5.642	5.424	5.314	5.240	5.238
HCC111	Amyotrophic Lateral Sclerosis and Other Anterior Horn Cell Disease	5.761	5.574	5.459	5.348	5.345
HCC112	Quadriplegic Cerebral Palsy	0.915	0.782	0.690	0.593	0.590
HCC113	Cerebral Palsy, Except Quadriplegic	0.603	0.508	0.433	0.350	0.347
HCC114	Spina Bifida and Other Brain/Spinal/Nervous System Congenital Anomalies	1.376	1.266	1.184	1.094	1.091
HCC115	Myasthenia Gravis/Myoneural Disorders and Guillain-Barre Syndrome/Inflammatory and Toxic Neuropathy	5.550	5.444	5.393	5.365	5.364
HCC117	Muscular Dystrophy	1.561	1.445	1.353	1.252	1.248
HCC118	Multiple Sclerosis	1.790	1.656	1.563	1.474	1.471
HCC119	Parkinsons, Huntingtons, and Spinocerebellar Disease, and Other Neurodegenerative Disorders	1.561	1.445	1.353	1.252	1.248
HCC120	Seizure Disorders and Convulsions	1.167	1.050	0.963	0.871	0.868
HCC121	Hydrocephalus	10.740	10.618	10.534	10.464	10.461
HCC122	Coma, Brain Compression/Anoxic Damage	11.024	10.847	10.738	10.657	10.654
HCC123	Narcolepsy and Cataplexy	4.582	4.419	4.310	4.218	4.215
HCC125	Respirator Dependence/Tracheostomy Status	21.711	21.476	21.356	21.292	21.293

HCC or RXC No.	Factor	Platinum	Gold	Silver	Bronze	Catastrophic
HCC126	Respiratory Arrest	8.925	8.681	8.560	8.492	8.491
HCC127	Cardio-Respiratory Failure and Shock, Including Respiratory Distress Syndromes	8.925	8.681	8.560	8.492	8.491
HCC128	Heart Assistive Device/Artificial Heart	19.352	19.182	19.086	19.034	19.039
HCC129	Heart Transplant Status/Complications	19.352	19.182	19.086	19.034	19.039
HCC130	Heart Failure	2.114	2.006	1.943	1.890	1.889
HCC131	Acute Myocardial Infarction	5.710	5.437	5.334	5.318	5.319
HCC132	Unstable Angina and Other Acute Ischemic Heart Disease	4.333	4.076	3.969	3.906	3.906
HCC135	Heart Infection/Inflammation, Except Rheumatic	9.550	9.428	9.336	9.245	9.241
HCC137	Hypoplastic Left Heart Syndrome and Other Severe Congenital Heart Disorders	2.354	2.242	2.159	2.087	2.085
HCC138	Major Congenital Heart/Circulatory Disorders	2.354	2.242	2.159	2.087	2.085
HCC139	Atrial and Ventricular Septal Defects, Patent Ductus Arteriosus, and Other Congenital Heart/Circulatory Disorders	2.354	2.242	2.159	2.087	2.085
HCC142	Specified Heart Arrhythmias	2.068	1.940	1.846	1.747	1.749
HCC145	Intracranial Hemorrhage	11.501	11.303	11.199	11.134	11.132
HCC146	Ischemic or Unspecified Stroke	1.589	1.449	1.381	1.325	1.324
HCC149	Cerebral Aneurysm and Arteriovenous Malformation	2.506	2.361	2.270	2.182	2.178
HCC150	Hemiplegia/Hemiparesis	3.702	3.558	3.501	3.483	3.483
HCC151	Monoplegia, Other Paralytic Syndromes	2.759	2.625	2.548	2.482	2.481
HCC153	Atherosclerosis of the Extremities with Ulceration or Gangrene	8.513	8.338	8.287	8.310	8.312
HCC154	Vascular Disease with Complications	5.876	5.705	5.617	5.563	5.561
HCC156	Pulmonary Embolism and Deep Vein Thrombosis	8.158	8.045	7.945	7.831	7.827
HCC158	Lung Transplant Status/Complications	11.241	11.061	10.970	10.928	10.928
HCC159	Cystic Fibrosis	4.651	4.456	4.346	4.270	4.268
HCC160	Chronic Obstructive Pulmonary Disease, Including Bronchiectasis	0.708	0.610	0.518	0.424	0.420
HCC161_1	Severe Asthma	0.708	0.610	0.518	0.424	0.420
HCC161_2	Asthma, Except Severe	0.708	0.610	0.518	0.424	0.420
HCC162	Fibrosis of Lung and Other Lung Disorders	1.669	1.555	1.476	1.396	1.394
HCC163	Aspiration and Specified Bacterial Pneumonias and Other Severe Lung Infections	6.800	6.776	6.772	6.785	6.786
HCC174	Exudative Macular Degeneration	1.410	1.250	1.133	1.006	1.002
HCC183[c]	Kidney Transplant Status/Complications	7.002	6.831	6.765	6.687	6.672
HCC184	End Stage Renal Disease	22.616	22.143	22.091	22.024	21.952
HCC187	Chronic Kidney Disease, Stage 5	0.754	0.654	0.624	0.599	0.588
HCC188	Chronic Kidney Disease, Severe (Stage 4)	0.754	0.654	0.624	0.599	0.588
HCC203	Ectopic and Molar Pregnancy	2.101	1.869	1.688	1.453	1.446

HCC or RXC No.	Factor	Platinum	Gold	Silver	Bronze	Catastrophic
HCC204	Miscarriage with Complications	0.735	0.627	0.487	0.297	0.289
HCC205	Miscarriage with No or Minor Complications	0.735	0.627	0.487	0.297	0.289
HCC207	Pregnancy with Delivery with Major Complications	4.112	3.743	3.511	3.184	3.177
HCC208	Pregnancy with Delivery with Complications	4.112	3.743	3.511	3.184	3.177
HCC209	Pregnancy with Delivery with No or Minor Complications	2.959	2.685	2.452	2.035	2.021
HCC210	(Ongoing) Pregnancy without Delivery with Major Complications	0.925	0.787	0.614	0.411	0.403
HCC211	(Ongoing) Pregnancy without Delivery with Complications	0.602	0.498	0.349	0.200	0.194
HCC212	(Ongoing) Pregnancy without Delivery with No or Minor Complications	0.045	0.011	0.000	0.000	0.000
HCC217	Chronic Ulcer of Skin, Except Pressure	1.673	1.557	1.495	1.449	1.448
HCC218	Extensive Third-Degree Burns	24.045	23.796	23.670	23.616	23.615
HCC219	Major Skin Burn or Condition	3.002	2.852	2.759	2.688	2.686
HCC223	Severe Head Injury	19.211	19.023	18.906	18.816	18.812
HCC226	Hip and Pelvic Fractures	8.717	8.433	8.321	8.299	8.299
HCC228	Vertebral Fractures without Spinal Cord Injury	4.629	4.430	4.311	4.209	4.206
HCC234	Traumatic Amputations and Amputation Complications	5.579	5.388	5.310	5.282	5.280
HCC251	Stem Cell, Including Bone Marrow, Transplant Status/Complications	19.317	19.299	19.253	19.203	19.204
HCC253	Artificial Openings for Feeding or Elimination	6.278	6.141	6.079	6.051	6.051
HCC254	Amputation Status, Upper Limb or Lower Limb	1.275	1.144	1.078	1.030	1.028
Interacted HCC Counts Factors						
	Severe illness, 1 payment HCC	-6.481	-6.531	-6.579	-6.647	-6.649
	Severe illness, 2 payment HCCs	-5.980	-6.064	-6.100	-6.138	-6.138
	Severe illness, 3 payment HCCs	-4.874	-4.919	-4.880	-4.800	-4.797
	Severe illness, 4 payment HCCs	-4.038	-4.010	-3.884	-3.675	-3.667
	Severe illness, 5 payment HCCs	-3.255	-3.127	-2.917	-2.600	-2.589
	Severe illness, 6 payment HCCs	-2.821	-2.566	-2.271	-1.865	-1.850
	Severe illness, 7 payment HCCs	-2.043	-1.611	-1.209	-0.711	-0.695
	Severe illness, 8 payment HCCs	-1.976	-1.496	-1.066	-0.544	-0.526
	Severe illness, 9 payment HCCs	0.766	1.457	2.004	2.616	2.636
	Severe illness, 10 or more payment HCCs	8.825	9.947	10.723	11.493	11.519
	Transplant severe illness, 4 payment HCCs	4.029	3.981	3.935	3.854	3.847
	Transplant severe illness, 5 payment HCCs	8.160	8.097	8.057	7.989	7.980
	Transplant severe illness, 6 payment HCCs	15.312	15.232	15.196	15.140	15.128
	Transplant severe illness, 7 payment HCCs	18.743	18.632	18.584	18.522	18.511
	Transplant severe illness, 8 or more payment HCCs	36.031	36.054	36.081	36.066	36.056

HCC or RXC No.	Factor	Platinum	Gold	Silver	Bronze	Catastrophic
Enrollment Duration Factors						
	Enrolled for 1 month, at least one payment HCC	10.880	9.150	8.099	7.149	7.117
	Enrolled for 2 months, at least one payment HCC	5.224	4.342	3.782	3.305	3.288
	Enrolled for 3 months, at least one payment HCC	3.367	2.788	2.400	2.080	2.070
	Enrolled for 4 months, at least one payment HCC	2.219	1.818	1.536	1.309	1.301
	Enrolled for 5 months, at least one payment HCC	1.636	1.339	1.121	0.944	0.938
	Enrolled for 6 months, at least one payment HCC	1.088	0.869	0.701	0.561	0.556
Prescription Drug Factors						
RXC 01	Anti-HIV Agents	5.647	5.055	4.669	4.306	4.296
RXC 02	Anti-Hepatitis C (HCV) Agents, Direct Acting Agents	8.662	8.116	7.936	7.952	7.956
RXC 03[d]	Antiarrhythmics	0.091	0.083	0.075	0.058	0.035
RXC 04	Phosphate Binders	1.008	1.204	1.125	1.295	1.411
RXC 05	Inflammatory Bowel Disease Agents	1.467	1.314	1.155	0.930	0.920
RXC 06	Insulin	1.429	1.215	1.022	0.841	0.834
RXC 07	Anti-Diabetic Agents, Except Insulin and Metformin Only	0.789	0.673	0.549	0.375	0.369
RXC 08	Multiple Sclerosis Agents	16.266	15.334	14.880	14.547	14.531
RXC 09[e]	Immune Suppressants and Immunomodulators	12.396	11.784	11.558	11.525	11.527
RXC 10	Cystic Fibrosis Agents	15.054	14.632	14.479	14.440	14.440
RXC 01 x HCC001	Additional effect for enrollees with RXC 01 and HCC 001	2.048	2.149	2.376	2.748	2.761
RXC 02 x HCC037_1, 036, 035_2, 035_1, 034	Additional effect for enrollees with RXC 02 and (HCC 037_1 or 036 or 035_2 or 035_1 or 034)	-0.528	-0.451	-0.389	-0.324	-0.322
RXC 03 x HCC142	Additional effect for enrollees with RXC 03 and HCC 142	0.000	0.000	0.000	0.000	0.000
RXC 04 x HCC184, 183, 187, 188	Additional effect for enrollees with RXC 04 and (HCC 184 or 183 or 187 or 188)	0.000	0.000	0.000	0.000	0.000
RXC 05 x HCC048, 041	Additional effect for enrollees with RXC 05 and (HCC 048 or 041)	-0.469	-0.365	-0.266	-0.146	-0.142
RXC 06 x HCC018, 019, 020, 021	Additional effect for enrollees with RXC 06 and (HCC 018 or 019 or 020 or 021)	0.434	0.492	0.567	0.578	0.580
RXC 07 x HCC018, 019, 020, 021	Additional effect for enrollees with RXC 07 and (HCC 018 or 019 or 020 or 021)	-0.295	-0.237	-0.189	-0.146	-0.144
RXC 08 x HCC118	Additional effect for enrollees with RXC 08 and HCC 118	0.947	1.380	1.709	2.146	2.168

HCC or RXC No.	Factor	Platinum	Gold	Silver	Bronze	Catastrophic
RXC 09 x HCC056 or 057 and 048 or 041	Additional effect for enrollees with RXC 09 and (HCC 048 or 041) and (HCC 056 or 057)	0.287	0.347	0.387	0.425	0.426
RXC 09 x HCC056	Additional effect for enrollees with RXC 09 and HCC 056	-1.073	-0.964	-0.876	-0.795	-0.792
RXC 09 x HCC057	Additional effect for enrollees with RXC 09 and HCC 057	-0.467	-0.376	-0.280	-0.173	-0.168
RXC 09 x HCC048, 041	Additional effect for enrollees with RXC 09 and (HCC 048 or 041)	2.454	2.573	2.695	2.872	2.877
RXC 10 x HCC159, 158	Additional effect for enrollees with RXC 10 and (HCC 159 or 158)	41.353	41.406	41.472	41.618	41.623

a/ Starting with the 2024 risk adjustment adult models, HHS will group HCC 18 Pancreas Transplant Status and HCC 83 Kidney Transplant Status/Complications to reflect that these transplants frequently co-occur for clinical reasons and to reduce volatility of coefficients across benefit years due to the small sample size of HCC 18. This change will also be reflected in the DIY Software for the 2024 benefit year.

b/ HCC numbers that appear with an underscore in this document will appear without the underscore in the DIY Software. For example, HCC 35_1 in this table will appear as HCC 351 in the DIY Software.

c/ Starting with the 2024 risk adjustment adult models, HHS will group HCC 18 Pancreas Transplant Status and HCC 183 Kidney Transplant Status/Complications to reflect that these transplants frequently co-occur for clinical reasons and to reduce volatility of coefficients across benefit years due to the small sample size of HCC 18. This change will also be reflected in the DIY Software for the 2024 benefit year.

d/ We constrain RXC 03 to be equal to average plan liability for RXC 03 drugs, RXC 04 to be equal to the average plan liability for RXC 04 drugs, and we constrain RXC 03 x HCC142 and RXC 04 x HCC184, 183, 187, 188 to be equal to 0. See CMS. (2016, March 24). March 2016 Risk Adjustment Methodology Discussion Paper. *https://www.cms.gov/cciio/resources/forms-reports-and-other-resources/downloads/ra-march-31-white-paper-032416.pdf* (where we previously discussed the use of constraints in the risk adjustment models).

e/ Similar to recalibration of the 2023 risk adjustment adult models and consistent with the final policies adopted in the 2023 Payment Notice, the 2024 factors in this rule reflect the removal of the mapping of hydroxychloroquine sulfate to RXC 09 (Immune Suppressants and Immunomodulators) and the related RXC 09 interactions (RXC 09 x HCC056 or 057 and 048 or 041; RXC 09 x HCC056; RXC 09 x HCC 057; RXC 09x HCC048, 041) from the 2018 and 2019 benefit year enrollee-level EDGE data sets for purposes of recalibrating the 2024 benefit year adult models. See 87 FR 27232 through 27235. Additionally, the 2023 factors for the adult models reflect the use of the final, fourth quarter (Q4) RXC mapping document that was applicable for each benefit year of data included in the current year's model recalibration (except under extenuating circumstances that can result in targeted changes to RXC mappings), while continuing to engage in annual and quarterly review processes. See 87 FR 27231 through 27232.

TABLE 2: Child Risk Adjustment Model Factors for the 2024 Benefit Year

Factor	Platinum	Gold	Silver	Bronze	Catastrophic
Demographic Factors					
Age 2-4, Male	0.288	0.195	0.146	0.109	0.108
Age 5-9, Male	0.213	0.132	0.093	0.069	0.068
Age 10-14, Male	0.236	0.156	0.115	0.092	0.091
Age 15-20, Male	0.271	0.186	0.135	0.101	0.100
Age 2-4, Female	0.233	0.151	0.113	0.088	0.087
Age 5-9, Female	0.160	0.087	0.056	0.037	0.036
Age 10-14, Female	0.227	0.149	0.110	0.087	0.086
Age 15-20, Female	0.314	0.210	0.145	0.099	0.097
Diagnosis Factors					
HIV/AIDS	4.490	3.999	3.762	3.617	3.615
Septicemia, Sepsis, Systemic Inflammatory Response Syndrome/Shock	14.897	14.669	14.536	14.439	14.437
Central Nervous System Infections, Except Viral Meningitis	13.638	13.470	13.360	13.293	13.291
Viral or Unspecified Meningitis	11.963	11.850	11.768	11.643	11.642
Opportunistic Infections	17.169	17.088	16.997	16.907	16.904
Metastatic Cancer	33.749	33.464	33.322	33.262	33.261
Lung, Brain, and Other Severe Cancers, Including Pediatric Acute Lymphoid Leukemia	9.374	9.094	8.929	8.808	8.804
Non-Hodgkin Lymphomas and Other Cancers and Tumors	7.293	7.065	6.911	6.777	6.772
Colorectal, Breast (Age < 50), Kidney, and Other Cancers	4.615	4.450	4.331	4.221	4.217
Breast (Age 50+) and Prostate Cancer, Benign/Uncertain Brain Tumors, and Other Cancers and Tumors	4.615	4.450	4.331	4.221	4.217
Thyroid Cancer, Melanoma, Neurofibromatosis, and Other Cancers and Tumors	1.171	1.037	0.925	0.806	0.802
Pancreas Transplant Status	11.106	11.020	10.974	10.939	10.937
Diabetes with Acute Complications	2.624	2.312	2.075	1.754	1.745
Diabetes with Chronic Complications	2.624	2.312	2.075	1.754	1.745
Diabetes without Complication	2.624	2.312	2.075	1.754	1.745
Protein-Calorie Malnutrition	19.295	19.163	19.078	19.037	19.035
Mucopolysaccharidosis	39.965	39.679	39.551	39.501	39.500
Lipidoses and Glycogenosis	39.965	39.679	39.551	39.501	39.500
Congenital Metabolic Disorders, Not Elsewhere Classified	4.830	4.698	4.609	4.541	4.538
Amyloidosis, Porphyria, and Other Metabolic Disorders	4.830	4.698	4.609	4.541	4.538
Adrenal, Pituitary, and Other Significant Endocrine Disorders	5.553	5.285	5.146	5.079	5.078
Liver Transplant Status/Complications	11.106	11.020	10.974	10.939	10.937
Acute Liver Failure/Disease, Including Neonatal Hepatitis	9.767	9.619	9.551	9.525	9.524
Chronic Liver Failure/End-Stage Liver Disorders	9.286	9.131	9.047	8.983	8.980
Cirrhosis of Liver	4.128	3.990	3.907	3.848	3.849
Chronic Viral Hepatitis C	1.186	1.046	0.961	0.917	0.917
Chronic Hepatitis, Except Chronic Viral Hepatitis C	0.197	0.169	0.142	0.111	0.110
Intestine Transplant Status/Complications	13.858	13.756	13.667	13.582	13.579

Factor	Platinum	Gold	Silver	Bronze	Catastrophic
Peritonitis/Gastrointestinal Perforation/Necrotizing Enterocolitis	17.886	17.459	17.325	17.276	17.275
Intestinal Obstruction	4.767	4.582	4.446	4.332	4.329
Chronic Pancreatitis	11.778	11.601	11.522	11.476	11.476
Acute Pancreatitis	5.360	5.102	4.953	4.826	4.823
Inflammatory Bowel Disease	9.915	9.478	9.266	9.139	9.135
Necrotizing Fasciitis	3.684	3.449	3.308	3.207	3.204
Bone/Joint/Muscle Infections/Necrosis	3.684	3.449	3.308	3.207	3.204
Rheumatoid Arthritis and Specified Autoimmune Disorders	4.733	4.456	4.296	4.195	4.192
Systemic Lupus Erythematosus and Other Autoimmune Disorders	0.746	0.619	0.500	0.376	0.372
Osteogenesis Imperfecta and Other Osteodystrophies	1.389	1.262	1.168	1.085	1.082
Congenital/Developmental Skeletal and Connective Tissue Disorders	1.389	1.262	1.168	1.085	1.082
Cleft Lip/Cleft Palate	1.174	1.006	0.881	0.756	0.752
Hemophilia	67.994	67.478	67.248	67.166	67.164
Myelodysplastic Syndromes and Myelofibrosis	13.130	12.957	12.863	12.801	12.800
Aplastic Anemia	13.130	12.957	12.863	12.801	12.800
Acquired Hemolytic Anemia, Including Hemolytic Disease of Newborn	13.130	12.957	12.863	12.801	12.800
Sickle Cell Anemia (Hb-SS)	3.851	3.643	3.511	3.411	3.408
Beta Thalassemia Major	3.851	3.643	3.511	3.411	3.408
Combined and Other Severe Immunodeficiencies	4.918	4.760	4.660	4.582	4.580
Disorders of the Immune Mechanism	4.918	4.760	4.660	4.582	4.580
Coagulation Defects and Other Specified Hematological Disorders	4.218	4.082	3.982	3.897	3.894
Drug Use with Psychotic Complications	2.517	2.331	2.202	2.065	2.061
Drug Use Disorder, Moderate/Severe, or Drug Use with Non-Psychotic Complications	2.517	2.331	2.202	2.065	2.061
Alcohol Use with Psychotic Complications	1.203	1.031	0.894	0.740	0.734
Alcohol Use Disorder, Moderate/Severe, or Alcohol Use with Specified Non-Psychotic Complications	1.203	1.031	0.894	0.740	0.734
Schizophrenia	3.991	3.694	3.511	3.350	3.346
Delusional and Other Specified Psychotic Disorders, Unspecified Psychosis	3.395	3.122	2.941	2.760	2.755
Major Depressive Disorder, Severe, and Bipolar Disorders	2.638	2.413	2.243	2.082	2.077
Personality Disorders	0.378	0.270	0.155	0.042	0.038
Anorexia/Bulimia Nervosa	2.453	2.277	2.147	2.034	2.030
Prader-Willi, Patau, Edwards, and Autosomal Deletion Syndromes	11.637	11.535	11.450	11.378	11.376
Down Syndrome, Fragile X, Other Chromosomal Anomalies, and Congenital Malformation Syndromes	0.982	0.842	0.742	0.642	0.638
Autistic Disorder	2.638	2.413	2.243	2.082	2.077
Pervasive Developmental Disorders, Except Autistic Disorder	0.404	0.314	0.222	0.146	0.144
Traumatic Complete Lesion Cervical Spinal Cord	11.137	10.900	10.779	10.704	10.702
Quadriplegia	11.137	10.900	10.779	10.704	10.702
Traumatic Complete Lesion Dorsal Spinal Cord	11.047	10.807	10.695	10.627	10.625

Factor	Platinum	Gold	Silver	Bronze	Catastrophic
Paraplegia	11.047	10.807	10.695	10.627	10.625
Spinal Cord Disorders/Injuries	4.782	4.560	4.404	4.246	4.240
Amyotrophic Lateral Sclerosis and Other Anterior Horn Cell Disease	50.056	49.780	49.630	49.543	49.540
Quadriplegic Cerebral Palsy	0.913	0.651	0.525	0.440	0.439
Cerebral Palsy, Except Quadriplegic	0.274	0.128	0.061	0.017	0.015
Spina Bifida and Other Brain/Spinal/Nervous System Congenital Anomalies	1.770	1.630	1.533	1.437	1.434
Myasthenia Gravis/Myoneural Disorders and Guillain-Barre Syndrome/Inflammatory and Toxic Neuropathy	11.126	10.941	10.858	10.829	10.829
Muscular Dystrophy	6.190	6.018	5.902	5.793	5.790
Multiple Sclerosis	9.870	9.439	9.256	9.199	9.200
Parkinsons, Huntingtons, and Spinocerebellar Disease, and Other Neurodegenerative Disorders	6.190	6.018	5.902	5.793	5.790
Seizure Disorders and Convulsions	1.667	1.509	1.368	1.223	1.218
Hydrocephalus	11.086	11.068	11.036	11.016	11.015
Coma, Brain Compression/Anoxic Damage	10.655	10.694	10.708	10.737	10.737
Narcolepsy and Cataplexy	4.295	4.102	3.955	3.821	3.816
Respirator Dependence/Tracheostomy Status	27.170	26.905	26.769	26.706	26.705
Respiratory Arrest	16.066	15.761	15.608	15.522	15.520
Cardio-Respiratory Failure and Shock, Including Respiratory Distress Syndromes	16.066	15.761	15.608	15.522	15.520
Heart Assistive Device/Artificial Heart	13.858	13.756	13.667	13.582	13.579
Heart Transplant Status/Complications	13.858	13.756	13.667	13.582	13.579
Heart Failure	4.738	4.612	4.524	4.454	4.452
Acute Myocardial Infarction	1.087	1.045	1.017	0.993	0.993
Unstable Angina and Other Acute Ischemic Heart Disease	1.087	1.045	1.017	0.993	0.993
Heart Infection/Inflammation, Except Rheumatic	16.465	16.330	16.226	16.134	16.130
Hypoplastic Left Heart Syndrome and Other Severe Congenital Heart Disorders	4.201	4.021	3.874	3.748	3.744
Major Congenital Heart/Circulatory Disorders	1.119	1.001	0.878	0.777	0.774
Atrial and Ventricular Septal Defects, Patent Ductus Arteriosus, and Other Congenital Heart/Circulatory Disorders	0.691	0.583	0.488	0.415	0.413
Specified Heart Arrhythmias	3.278	3.106	2.985	2.886	2.883
Intracranial Hemorrhage	12.842	12.667	12.542	12.440	12.435
Ischemic or Unspecified Stroke	1.680	1.505	1.397	1.293	1.290
Cerebral Aneurysm and Arteriovenous Malformation	1.745	1.547	1.416	1.288	1.283
Hemiplegia/Hemiparesis	5.876	5.734	5.649	5.574	5.571
Monoplegia, Other Paralytic Syndromes	3.202	3.050	2.948	2.842	2.838
Atherosclerosis of the Extremities with Ulceration or Gangrene	10.987	10.723	10.584	10.490	10.488
Vascular Disease with Complications	7.360	7.213	7.130	7.077	7.077
Pulmonary Embolism and Deep Vein Thrombosis	19.940	19.772	19.662	19.581	19.579
Lung Transplant Status/Complications	13.858	13.756	13.667	13.582	13.579
Cystic Fibrosis	46.375	45.821	45.593	45.555	45.556
Chronic Obstructive Pulmonary Disease, Including Bronchiectasis	1.807	1.629	1.497	1.375	1.372
Severe Asthma	1.269	1.080	0.919	0.762	0.757
Asthma, Except Severe	0.347	0.258	0.172	0.104	0.102
Fibrosis of Lung and Other Lung Disorders	1.474	1.310	1.170	1.039	1.035

Factor	Platinum	Gold	Silver	Bronze	Catastrophic
Aspiration and Specified Bacterial Pneumonias and Other Severe Lung Infections	10.655	10.694	10.708	10.737	10.737
Kidney Transplant Status/Complications	11.106	11.020	10.974	10.939	10.937
End Stage Renal Disease	37.125	36.898	36.806	36.786	36.783
Chronic Kidney Disease, Stage 5	0.266	0.200	0.150	0.093	0.091
Chronic Kidney Disease, Severe (Stage 4)	0.266	0.200	0.150	0.093	0.091
Ectopic and Molar Pregnancy	1.605	1.396	1.203	1.035	1.028
Miscarriage with Complications	0.597	0.466	0.325	0.183	0.178
Miscarriage with No or Minor Complications	0.597	0.466	0.325	0.183	0.178
Pregnancy with Delivery with Major Complications	3.535	3.159	2.880	2.439	2.424
Pregnancy with Delivery with Complications	3.535	3.159	2.880	2.439	2.424
Pregnancy with Delivery with No or Minor Complications	2.619	2.338	2.064	1.572	1.553
(Ongoing) Pregnancy without Delivery with Major Complications	0.553	0.406	0.236	0.129	0.125
(Ongoing) Pregnancy without Delivery with Complications	0.553	0.406	0.236	0.129	0.125
(Ongoing) Pregnancy without Delivery with No or Minor Complications	0.365	0.249	0.135	0.060	0.057
Chronic Ulcer of Skin, Except Pressure	2.144	2.023	1.933	1.863	1.861
Extensive Third-Degree Burns	22.431	22.185	22.041	21.957	21.952
Major Skin Burn or Condition	2.195	2.007	1.877	1.757	1.753
Severe Head Injury	22.431	22.185	22.041	21.957	21.952
Hip and Pelvic Fractures	4.771	4.510	4.344	4.242	4.239
Vertebral Fractures without Spinal Cord Injury	4.693	4.459	4.289	4.124	4.119
Traumatic Amputations and Amputation Complications	3.506	3.260	3.106	2.949	2.943
Stem Cell, Including Bone Marrow, Transplant Status/Complications	13.858	13.756	13.667	13.582	13.579
Artificial Openings for Feeding or Elimination	6.435	6.241	6.156	6.110	6.110
Amputation Status, Upper Limb or Lower Limb	3.506	3.260	3.106	2.949	2.943
Interacted HCC Counts Factors					
Severe illness, 1 payment HCC	-10.655	-10.694	-10.708	-10.737	-10.737
Severe illness, 2 payment HCCs	-10.570	-10.647	-10.680	-10.723	-10.724
Severe illness, 3 payment HCCs	-8.365	-8.447	-8.418	-8.359	-8.355
Severe illness, 4 payment HCCs	-7.724	-7.718	-7.590	-7.404	-7.396
Severe illness, 5 payment HCCs	-4.948	-4.829	-4.600	-4.291	-4.279
Severe illness, 6 or 7 payment HCCs	-0.619	-0.297	0.075	0.521	0.537
Severe illness, 8 or more payment HCCs	20.186	21.065	21.786	22.505	22.529
Transplant severe illness, 4 or more payment HCCs	16.793	16.848	16.877	16.897	16.899

TABLE 3: HCCs Selected for the HCC Interacted Counts Variables for the Adult and Child Models for the 2024 Benefit Year

Payment HCC	Severity Illness Indicator	Transplant Indicator
HCC 2 Septicemia, Sepsis, Systemic Inflammatory Response Syndrome/Shock	X	
HCC 3 Central Nervous System Infections, Except Viral Meningitis	X	
HCC 4 Viral or Unspecified Meningitis	X	
HCC 6 Opportunistic Infections	X	
HCC 23 Protein-Calorie Malnutrition	X	
HCC 34 Liver Transplant Status/Complications	X	X
HCC 41 Intestine Transplant Status/Complications	X	X
HCC 42 Peritonitis/Gastrointestinal Perforation/Necrotizing Enterocolitis	X	
HCC 96 Prader-Willi, Patau, Edwards, and Autosomal Deletion Syndromes	X	
HCC 121 Hydrocephalus	X	
HCC 122 Coma, Brain Compression/Anoxic Damage	X	
HCC 125 Respirator Dependence/Tracheostomy Status	X	
HCC 135 Heart Infection/Inflammation, Except Rheumatic	X	
HCC 145 Intracranial Hemorrhage	X	
HCC 156 Pulmonary Embolism and Deep Vein Thrombosis	X	
HCC 158 Lung Transplant Status/Complications	X	X
HCC 163 Aspiration and Specified Bacterial Pneumonias and Other Severe Lung Infections	X	
HCC 218 Extensive Third-Degree Burns	X	
HCC 223 Severe Head Injury	X	
HCC 251 Stem Cell, Including Bone Marrow, Transplant Status/Complications	X	X
G13 (Includes HCC 126 Respiratory Arrest and HCC 127 Cardio-Respiratory Failure and Shock, Including Respiratory Distress Syndromes)	X	
G14 (Includes HCC 128 Heart Assistive Device/Artificial Heart and HCC 129 Heart Transplant Status/Complications)	X	X
G24 (Includes HCC 18 Pancreas Transplant Status and HCC 183 Kidney Transplant Status/Complications)*	X	X

* Starting with the 2024 risk adjustment adult models, HHS will group HCC 18 Pancreas Transplant Status and HCC 183 Kidney Transplant Status/Complications to reflect that these transplants frequently co-occur for clinical reasons and to reduce volatility of coefficients across benefit years due to the small sample size of HCC 18. This change will also be reflected in the DIY Software for the 2024 benefit year and will be applied to the adult models only. In the child models, HCC 18 and HCC 183 are subject to an *a priori* constraint (S1) with HCC 34, also for sample size reasons. See, for example, Section 4.2.2 of the 2019 White Paper. (June 17, 2019) *https://www.cms.gov/CCIIO/Resources/Regulations-and-Guidance/Downloads/Potential-Updates-to-HHS-HCCs-HHS-operated-Risk-Adjustment-Program.pdf*. Nevertheless, in both the adult and child models, the presence of one of these HCCs either alone or in a group will trigger a severity illness indicator and/or a transplant indicator for the interacted counts model specification depending on the total number of HCCs the enrollee has.

TABLE 4: Infant Risk Adjustment Model Factors for the 2024 Benefit Year

Group	Platinum	Gold	Silver	Bronze	Catastrophic
Extremely Immature * Severity Level 5 (Highest)	225.754	224.102	223.390	223.190	223.189
Extremely Immature * Severity Level 4	162.909	161.046	160.171	159.788	159.782
Extremely Immature * Severity Level 3	36.950	35.414	34.671	34.338	34.330
Extremely Immature * Severity Level 2	36.950	35.414	34.671	34.338	34.330
Extremely Immature * Severity Level 1 (Lowest)	36.950	35.414	34.671	34.338	34.330
Immature * Severity Level 5 (Highest)	127.417	125.708	124.964	124.729	124.726
Immature * Severity Level 4	75.684	73.973	73.203	72.924	72.919
Immature * Severity Level 3	36.950	35.414	34.671	34.338	34.330
Immature * Severity Level 2	36.950	35.414	34.671	34.338	34.330
Immature * Severity Level 1 (Lowest)	28.369	26.894	26.146	25.745	25.734
Premature/Multiples * Severity Level 5 (Highest)	115.509	114.050	113.404	113.199	113.198
Premature/Multiples * Severity Level 4	32.082	30.557	29.821	29.460	29.453
Premature/Multiples * Severity Level 3	15.009	13.884	13.202	12.641	12.623
Premature/Multiples * Severity Level 2	8.402	7.557	6.909	6.201	6.175
Premature/Multiples * Severity Level 1 (Lowest)	6.306	5.569	4.951	4.366	4.346
Term * Severity Level 5 (Highest)	86.920	85.564	84.906	84.586	84.580
Term * Severity Level 4	17.039	15.909	15.237	14.692	14.677
Term * Severity Level 3	6.250	5.550	4.948	4.333	4.311
Term * Severity Level 2	3.964	3.368	2.784	2.177	2.155
Term * Severity Level 1 (Lowest)	2.042	1.592	1.108	0.790	0.781
Age1 * Severity Level 5 (Highest)	70.542	69.775	69.404	69.235	69.232
Age1 * Severity Level 4	13.870	13.286	12.950	12.711	12.704
Age1 * Severity Level 3	3.079	2.756	2.528	2.344	2.337
Age1 * Severity Level 2	2.039	1.758	1.531	1.324	1.317
Age1 * Severity Level 1 (Lowest)	0.611	0.499	0.443	0.406	0.405
Age 0 Male	0.634	0.590	0.557	0.494	0.491
Age 1 Male	0.103	0.086	0.069	0.049	0.048

TABLE 5: HHS HCCs Included in Infant Model Maturity Categories

Maturity Category	HCC/Description
Extremely Immature	Extremely Immature Newborns, Birth weight < 500 Grams
Extremely Immature	Extremely Immature Newborns, Including Birth weight 500-749 Grams
Extremely Immature	Extremely Immature Newborns, Including Birth weight 750-999 Grams
Immature	Premature Newborns, Including Birth weight 1000-1499 Grams
Immature	Premature Newborns, Including Birth weight 1500-1999 Grams
Premature/Multiples	Premature Newborns, Including Birth weight 2000-2499 Grams
Premature/Multiples	Other Premature, Low Birth weight, Malnourished, or Multiple Birth Newborns
Term	Term or Post-Term Singleton Newborn, Normal or High Birth weight
Age 1	All age 1 infants

TABLE 6: HHS HCCs Included in Infant Model Severity Categories

Severity Category	HCC/Description
Severity Level 5 (Highest)	Metastatic Cancer
Severity Level 5	Pancreas Transplant Status
Severity Level 5	Liver Transplant Status/Complications
Severity Level 5	Intestine Transplant Status/Complications
Severity Level 5	Peritonitis/Gastrointestinal Perforation/Necrotizing Enterocolitis
Severity Level 5	Respirator Dependence/Tracheostomy Status
Severity Level 5	Heart Assistive Device/Artificial Heart
Severity Level 5	Heart Transplant Status/Complications
Severity Level 5	Heart Failure
Severity Level 5	Hypoplastic Left Heart Syndrome and Other Severe Congenital Heart Disorders
Severity Level 5	Lung Transplant Status/Complications
Severity Level 5	Kidney Transplant Status/Complications
Severity Level 5	End Stage Renal Disease
Severity Level 5	Stem Cell, Including Bone Marrow, Transplant Status/Complications
Severity Level 4	Septicemia, Sepsis, Systemic Inflammatory Response Syndrome/Shock
Severity Level 4	Lung, Brain, and Other Severe Cancers, Including Pediatric Acute Lymphoid Leukemia
Severity Level 4	Mucopolysaccharidosis
Severity Level 4	Adrenal, Pituitary, and Other Significant Endocrine Disorders
Severity Level 4	Acute Liver Failure/Disease, Including Neonatal Hepatitis
Severity Level 4	Chronic Liver Failure/End-Stage Liver Disorders
Severity Level 4	Major Congenital Anomalies of Diaphragm, Abdominal Wall, and Esophagus, Age < 2
Severity Level 4	Myelodysplastic Syndromes and Myelofibrosis
Severity Level 4	Aplastic Anemia
Severity Level 4	Combined and Other Severe Immunodeficiencies
Severity Level 4	Traumatic Complete Lesion Cervical Spinal Cord
Severity Level 4	Quadriplegia
Severity Level 4	Amyotrophic Lateral Sclerosis and Other Anterior Horn Cell Disease
Severity Level 4	Quadriplegic Cerebral Palsy
Severity Level 4	Myasthenia Gravis/Myoneural Disorders and Guillain-Barre Syndrome/Inflammatory and Toxic Neuropathy
Severity Level 4	Coma, Brain Compression/Anoxic Damage
Severity Level 4	Respiratory Arrest
Severity Level 4	Cardio-Respiratory Failure and Shock, Including Respiratory Distress Syndromes
Severity Level 4	Acute Myocardial Infarction
Severity Level 4	Heart Infection/Inflammation, Except Rheumatic
Severity Level 4	Major Congenital Heart/Circulatory Disorders
Severity Level 4	Intracranial Hemorrhage
Severity Level 4	Ischemic or Unspecified Stroke
Severity Level 4	Vascular Disease with Complications
Severity Level 4	Pulmonary Embolism and Deep Vein Thrombosis
Severity Level 4	Aspiration and Specified Bacterial Pneumonias and Other Severe Lung Infections
Severity Level 4	Chronic Kidney Disease, Stage 5
Severity Level 4	Artificial Openings for Feeding or Elimination
Severity Level 3	HIV/AIDS
Severity Level 3	Central Nervous System Infections, Except Viral Meningitis
Severity Level 3	Opportunistic Infections
Severity Level 3	Non-Hodgkin Lymphomas and Other Cancers and Tumors
Severity Level 3	Colorectal, Breast (Age < 50), Kidney and Other Cancers
Severity Level 3	Breast (Age 50+) and Prostate Cancer, Benign/Uncertain Brain Tumors, and Other Cancers and Tumors

Severity Category	HCC/Description
Severity Level 3	Lipidoses and Glycogenosis
Severity Level 3	Intestinal Obstruction
Severity Level 3	Necrotizing Fasciitis
Severity Level 3	Bone/Joint/Muscle Infections/Necrosis
Severity Level 3	Osteogenesis Imperfecta and Other Osteodystrophies
Severity Level 3	Cleft Lip/Cleft Palate
Severity Level 3	Hemophilia
Severity Level 3	Disorders of the Immune Mechanism
Severity Level 3	Coagulation Defects and Other Specified Hematological Disorders
Severity Level 3	Drug Use with Psychotic Complications
Severity Level 3	Drug Use Disorder, Moderate/Severe, or Drug Use with Non-Psychotic Complications
Severity Level 3	Alcohol Use with Psychotic Complications
Severity Level 3	Alcohol Use Disorder, Moderate/Severe, or Alcohol Use with Specified Non-Psychotic Complications
Severity Level 3	Prader-Willi, Patau, Edwards, and Autosomal Deletion Syndromes
Severity Level 3	Traumatic Complete Lesion Dorsal Spinal Cord
Severity Level 3	Paraplegia
Severity Level 3	Spinal Cord Disorders/Injuries
Severity Level 3	Cerebral Palsy, Except Quadriplegic
Severity Level 3	Spina Bifida and Other Brain/Spinal/Nervous System Congenital Anomalies
Severity Level 3	Muscular Dystrophy
Severity Level 3	Parkinson's, Huntington's, and Spinocerebellar Disease, and Other Neurodegenerative Disorders
Severity Level 3	Hydrocephalus
Severity Level 3	Unstable Angina and Other Acute Ischemic Heart Disease
Severity Level 3	Atrial and Ventricular Septal Defects, Patent Ductus Arteriosus, and Other Congenital Heart/Circulatory Disorders
Severity Level 3	Specified Heart Arrhythmias
Severity Level 3	Cerebral Aneurysm and Arteriovenous Malformation
Severity Level 3	Hemiplegia/Hemiparesis
Severity Level 3	Cystic Fibrosis
Severity Level 3	Extensive Third-Degree Burns
Severity Level 3	Severe Head Injury
Severity Level 3	Hip and Pelvic Fractures
Severity Level 3	Vertebral Fractures without Spinal Cord Injury
Severity Level 2	Viral or Unspecified Meningitis
Severity Level 2	Thyroid Cancer, Melanoma, Neurofibromatosis, and Other Cancers and Tumors
Severity Level 2	Diabetes with Acute Complications
Severity Level 2	Diabetes with Chronic Complications
Severity Level 2	Diabetes without Complication
Severity Level 2	Protein-Calorie Malnutrition
Severity Level 2	Congenital Metabolic Disorders, Not Elsewhere Classified
Severity Level 2	Amyloidosis, Porphyria, and Other Metabolic Disorders
Severity Level 2	Cirrhosis of Liver
Severity Level 2	Chronic Pancreatitis
Severity Level 2	Acute Pancreatitis
Severity Level 2	Inflammatory Bowel Disease
Severity Level 2	Rheumatoid Arthritis and Specified Autoimmune Disorders
Severity Level 2	Systemic Lupus Erythematosus and Other Autoimmune Disorders
Severity Level 2	Congenital/Developmental Skeletal and Connective Tissue Disorders
Severity Level 2	Acquired Hemolytic Anemia, Including Hemolytic Disease of Newborn
Severity Level 2	Sickle Cell Anemia (Hb-SS)
Severity Level 2	Down Syndrome, Fragile X, Other Chromosomal Anomalies, and Congenital

Severity Category	HCC/Description
	Malformation Syndromes
Severity Level 2	Seizure Disorders and Convulsions
Severity Level 2	Monoplegia, Other Paralytic Syndromes
Severity Level 2	Atherosclerosis of the Extremities with Ulceration or Gangrene
Severity Level 2	Chronic Obstructive Pulmonary Disease, Including Bronchiectasis
Severity Level 2	Severe Asthma
Severity Level 2	Fibrosis of Lung and Other Lung Disorders
Severity Level 2	Chronic Kidney Disease, Severe (Stage 4)
Severity Level 2	Chronic Ulcer of Skin, Except Pressure
Severity Level 2	Major Skin Burn or Condition
Severity Level 1 (Lowest)	Chronic Viral Hepatitis C
Severity Level 1	Chronic Hepatitis, Except Chronic Viral Hepatitis C
Severity Level 1	Beta Thalassemia Major
Severity Level 1	Autistic Disorder
Severity Level 1	Pervasive Developmental Disorders, Except Autistic Disorder
Severity Level 1	Multiple Sclerosis
Severity Level 1	Asthma, Except Severe
Severity Level 1	Traumatic Amputations and Amputation Complications
Severity Level 1	Amputation Status, Upper Limb or Lower Limb

BILLING CODE 4120–01–C

After reviewing public comments, we are finalizing the list of factors to be employed in the HHS risk adjustment models with the following modifications. In the proposed rule (87 FR 78219 through 78226), the adult risk adjustment model factor coefficients reflected a blend of separately solved coefficients from the 2018, 2019, and 2020 benefit years of enrollee-level EDGE data, with an exception to exclude the 2020 benefit year data from the blending of the age-sex coefficients for the adult models. In this final rule, the adult risk adjustment model factor coefficients for the 2024 benefit year have been updated to reflect the finalization of the use of the 2018, 2019 and 2020 benefit year enrollee-level EDGE data for recalibration of the 2024 benefit year risk adjustment models for all model coefficients, including the adult age-sex coefficients, as detailed in an earlier section of this rule.

We summarize and respond to public comments received on the list of factors to be employed in the HHS risk adjustment models below.

Comment: One commenter stated that the enrollment duration factors do not fully capture the financial impact of enrollment duration for consumers who enroll during SEPs, and requested HHS further investigate how the HHS risk adjustment models can be updated and improved to reflect more recent changes to SEPs.

Response: In the 2023 Payment Notice (87 FR 27228 through 27230), we changed the enrollment duration factors in the adult risk adjustment models to improve prediction for partial-year adult enrollees with and without HCCs. As described in the 2021 Risk Adjustment (RA) Technical Paper,[51] we found that the previous adult model enrollment duration factors underpredicted plan liability for partial-year adult enrollees with HCCs and overpredicted plan liability for partial-year adult enrollees without HCCs. Therefore, beginning with the 2023 benefit year, we eliminated the enrollment duration factors of up to 11 months for all enrollees in the adult models, and replaced them with new monthly enrollment duration factors of up to 6 months that would apply only to adult enrollees with HCCs. HHS did not propose and is not finalizing any changes to the enrollment duration factors as part of this rulemaking. However, as more data years become available, we will continue to investigate the performance of the enrollment duration factors. Specifically, as the SEP landscape changes and we have new data to reflect those changes,[52] we will assess the extent to which the enrollment duration factors fully capture the financial impact of enrollment duration for enrollees who enroll during an SEP.

e. CSR Adjustments

In the HHS Notice of Benefit and Payment Parameters for 2024 proposed rule (87 FR 78206, 78235), we proposed to continue including an adjustment for the receipt of CSRs in the risk adjustment models in all 50 States and the District of Columbia. We explained that while we continue to study and explore a range of options to update the CSR adjustments to improve prediction for CSR enrollees and whether changes are needed to the risk adjustment transfer formula to account for CSR plans,[53] to maintain stability and certainty for issuers for the 2024 benefit year, we proposed to maintain the CSR adjustment factors finalized in the 2019, 2020, 2021, 2022, and 2023 Payment Notices.[54] See Table 7. We also proposed to continue to use a CSR adjustment factor of 1.12 for all Massachusetts wrap-around plans in the risk adjustment PLRS calculation, as all

[51] HHS published analysis of CSR population utilization in the HHS-Operated Risk Adjustment Technical Paper on Possible Model Changes. (2021, October 26). CMS. *https://www.cms.gov/files/document/2021-ra-technical-paper.pdf.*

[52] See, for example, CMS. (2022, October 28). Marketplace Stakeholder Technical Assistance Tip Sheet on the Monthly Special Enrollment Period for Advance Payments of the Premium Tax credit—Eligible Consumers with Household Income at or below 150% of the Federal Poverty Level. *https://www.cms.gov/CCIIO/Resources/Regulations-and-Guidance/150FPLSEPTATIPSHEET.*

[53] See CMS. (2021, October 26). HHS-Operated Risk Adjustment Technical Paper on Possible Model Changes. Appendix A. *https://www.cms.gov/files/document/2021-ra-technical-paper.pdf.* We are also considering a letter recently published by the American Academy of Actuaries regarding accounting for the receipt of CSRs in risk adjustment and plan rating and are continuing to monitor changes related to these issues. Bohl, J., Novak, D., & Karcher, J. (2022, September 8). *Comment Letter on Cost-Sharing Reduction Premium Load Factors.* American Academy of Actuaries. *https://www.actuary.org/sites/default/files/2022-09/Academy_CSR_Load_Letter_09.08.22.pdf.*

[54] See 83 FR 16930 at 16953; 84 FR 17478 through 17479; 85 FR 29190; 86 FR 24181; and 87 FR 27235 through 27236.

of Massachusetts' cost-sharing plan variations have AVs above 94 percent (81 FR 12228).

We sought comment on these proposals. After reviewing the public comments, we are finalizing the CSR adjustment factors as proposed.

TABLE 7: Cost-Sharing Reduction Adjustment Factors

Household Income	Plan AV	Adjustment Factor
Silver Plan Variant Recipients		
100-150% of Federal Poverty Line (FPL)	Plan Variation 94%	1.12
150-200% of FPL	Plan Variation 87%	1.12
200-250% of FPL	Plan Variation 73%	1.00
>250% of FPL	Standard Plan 70%	1.00
Zero Cost Sharing Recipients		
<300% of FPL	Platinum (90%)	1.00
<300% of FPL	Gold (80%)	1.07
<300% of FPL	Silver (70%)	1.12
<300% of FPL	Bronze (60%)	1.15
Limited Cost Sharing Recipients		
>300% of FPL	Platinum (90%)	1.00
>300% of FPL	Gold (80%)	1.07
>300% of FPL	Silver (70%)	1.12
>300% of FPL	Bronze (60%)	1.15

We summarize and respond to public comments received on the proposed CSR adjustment factors below.

Comment: One commenter supported using the proposed CSR adjustment factors in the HHS-operated risk adjustment program. Another commenter supported continuing to apply an adjustment for Massachusetts wrap-around plans to account for its unique market dynamics. A few commenters supported further evaluation of the CSR adjustment factors. One commenter requested evaluation of the current CSR adjustment factors in light of an absence of funding of CSR subsidies and due to the potential socioeconomic health equity issues associated with lower-than-anticipated induced utilization levels in the CSR population.[55] Another commenter requested a technical paper before future proposed rulemaking with further CSR induced demand analysis.

One commenter stated that current CSR adjustment factors, specifically when applied to CSR 87 percent and 94 percent variants, do not accurately reflect population risk and another commenter requested the risk adjustment formula reflect actual costs incurred by 87 percent and 94 percent AV enrollees.

Response: We appreciate the comments in support of these proposals and are finalizing the 2024 benefit year CSR adjustment factors as proposed. While we have studied the CSR adjustment factors, we agree continued study of the CSR adjustment factors is warranted to further assess the different options outlined in the 2021 RA Technical Paper and other potential approaches before pursuing any changes.[56] However, at this time, we are not planning to publish another technical paper with additional CSR induced demand analysis prior to pursing changes to these factors in any future proposed rulemaking. We anticipate that between the 2021 RA Technical Paper and any future notice-and-comment rulemaking, sufficient analysis and justification for any proposed changes would be provided.

Additionally, we reiterate the findings from the 2021 RA Technical Paper that the current CSR adjustment factors are predicting actual plan liability relatively accurately on average, with the nationally-approximated risk term predictive ratios for CSR 87 percent and 94 percent variants both within +/-5 percent. We also believe that the collection and extraction of additional data elements from issuers' EDGE servers, including plan ID and rating area, will help further inform our study of the CSR adjustment factors and may allow us to further consider potential socioeconomic issues in the CSR populations. Therefore, HHS intends to review the enrollee-level EDGE data with the plan ID and rating area before proposing any changes to the CSR adjustment factors in future notice-and-comment rulemaking.

Comment: A few commenters were concerned about the underprediction of zero and limited sharing CSR plan variants for American Indian/Alaska Natives (AI/AN) in the risk term of the State payment transfer formula, as outlined in the 2021 RA Technical Paper,[57] particularly in States that have a high percentage of AI/AN enrollment, because competition for these enrollees may be discouraged by this underprediction.[58] These commenters were concerned that this market dynamic would result in issuers with fewer AI/AN enrollees having the ability to more aggressively price silver plan premiums, gaining competitive advantage and depressing premium tax credits for enrollees in that State's market. One commenter recommended that HHS reframe and recalibrate the CSR adjustment factors to fully eliminate the underprediction of liability for AI/AN enrollees to best capture actual CSR experience and mitigate any existing imbalances in risk adjustment State transfers across metal and CSR plan variants.

Response: As part of our overall analysis of the CSR adjustment factors,

[55] HHS published analysis of CSR population utilization in the HHS-Operated Risk Adjustment Technical Paper on Possible Model Changes. (2021, October 26). CMS. *https://www.cms.gov/files/document/2021-ra-technical-paper.pdf.*

[56] Ibid.

[57] Ibid.

[58] The CSR adjustment factors for zero cost sharing recipients (less than 300 percent of FPL) and limited cost sharing recipients (greater than 300 percent of FPL) for each metal level are included in Table 7 of this rule.

we will also continue to consider options for how to recalibrate and adjust the CSR adjustment factors for the zero and limited sharing CSR plan variants for future benefit years. In the 2021 RA Technical Paper, we provided an analysis that showed the underprediction of zero and limited sharing CSR plan variants for AI/AN in HHS risk adjustment and considered a variety of different options to adjust the CSR adjustment factors.[59] Because this analysis was conducted at the national level, we did not observe any trends of particular issuers, States or rating areas having a higher percentage of AI/AN enrollment as noted by the commenter. Specifically, we were extracting and using national enrollee-level EDGE data without issuer or geographic markers. Therefore, in the past and when we developed the proposed rule, we did not have the ability to analyze the distribution of the CSR populations at a more granular level (for example, at the issuer, State or rating area level) to see, for example, which issuers, States or rating areas have a high percentage of AI/AN enrollment. However, with policies finalized in the 2023 Payment Notice (87 FR 27241 through 27243) and this final rule, we will have the ability to extract and use multiple years of enrollee-level EDGE data with plan ID and rating area markers and will be able to further analyze the CSR populations at a more granular level, including analyzing whether incentives may exist in certain States with high proportions of AI/AN populations for issuers with fewer AI/AN enrollees to more aggressively price silver plan premiums in those States, to further consider potential changes to these factors for future benefit years. In the meantime, we are finalizing the CSR adjustment factors as proposed for the 2024 benefit year to maintain stability and certainty for issuers.

Comment: We also received several comments in response to a reference to the American Academy of Actuaries' letter on CSR loading in a footnote in the proposed rule.[60] These commenters objected to HHS considering any method of estimating CSR premium load factors that involves issuers using experience data or issuer pricing models to estimate the CSR load for silver plan variants. These commenters stated that they believed such a methodology is a violation of the ACA's single risk pool requirement, which requires issuers to treat all individual market enrollees as part of a single risk pool so that pricing reflects utilization of essential benefits by a standard population. These commenters shared their experience from Texas and New Mexico, where they claim aligning plan prices by AV when regulating the variation in metal level premiums resulted in large enrollment increases and enhanced affordability following premium realignment. One commenter expressed concern about using a nationally weighted CSR silver load in the rating term of the transfer formula due to variations in State CSR enrollment mixes or CSR loading requirement recommending the use of State-specific AV factors, as discussed in the 2021 RA Technical Paper. Another of these commenters suggested that anticipated premiums should instead reflect the average AV of all CSR variants.

Response: We appreciate the comments on potential approaches to change the current CSR adjustment factors and, as previously noted, are continuing to study these issues for potential updates to these factors in future benefit years. We did not propose and are not adopting any changes to the CSR adjustment factors. With policies finalized in the 2023 Payment Notice (87 FR 27241 through 27243), we have the ability to extract and use enrollee-level EDGE data with plan ID and rating area markers to further analyze the CSR populations at a more granular level to further consider potential changes to these factors for future benefit years, as well as other potential approaches. This includes consideration of the American Academy of Actuaries letter regarding accounting for the receipt of CSRs in the HHS-operated risk adjustment program and plan rating.[61] As part of this effort, we will also consider interested parties' analysis and comments on potential approaches under consideration, including the feedback provided by these commenters. We are aware of the interaction that potential future changes to the CSR adjustment factors may have with regard to the ACA's single risk pool requirement, and confirm that any changes to the CSR adjustment factors would be designed to align with other applicable Federal market reforms. We also affirm that interested parties will have an opportunity to comment on any potential changes to the CSR adjustment factors for future benefit years, as those updates would be pursued through notice-and-comment rulemaking.

f. Model Performance Statistics

Each benefit year, to evaluate risk adjustment model performance, we examine each model's R-squared statistic and predictive ratios (PRs). The R-squared statistic, which calculates the percentage of individual variation explained by a model, measures the predictive accuracy of the model overall. The PR for each of the HHS risk adjustment model is the ratio of the weighted mean predicted plan liability for the model sample population to the weighted mean actual plan liability for the model sample population. The PR represents how well the model does on average at predicting plan liability for that subpopulation.

A subpopulation that is predicted perfectly will have a PR of 1.0. For each of the current and proposed HHS risk adjustment models, the R-squared statistic and the PRs are in the range of published estimates for concurrent risk adjustment models.[62] Because we are finalizing a blend of coefficients from separately solved models based on the 2018, 2019, and 2020 benefit years' enrollee-level EDGE data, we are publishing the R-squared statistic for each model separately to verify their statistical validity. The R-squared statistics for the 2024 benefit models are shown in Table 8.

[59] HHS published analysis of CSR population utilization in the HHS-Operated Risk Adjustment Technical Paper on Possible Model Changes. (2021, October 26). CMS. *https://www.cms.gov/files/document/2021-ra-technical-paper.pdf.*

[60] Bohl, J., Novak, D., & Karcher, J. (2022, September 8). *Comment Letter on Cost-Sharing Reduction Premium Load Factors.* American Academy of Actuaries. *https://www.actuary.org/sites/default/files/2022-09/Academy_CSR_Load_Letter_09.08.22.pdf.*

[61] Ibid.

[62] Hileman, G., & Steele, S. (2016). Accuracy of Claims-Based Risk Scoring Models. Society of Actuaries. *https://www.soa.org/4937b5/globalassets/assets/files/research/research-2016-accuracy-claims-based-risk-scoring-models.pdf.*

TABLE 8: R-Squared Statistic for the HHS Risk Adjustment Models

Models	2018 Enrollee-Level EDGE Data	2019 Enrollee-Level EDGE Data	2020 Enrollee-Level EDGE Data
Platinum Adult	0.4411	0.4441	0.4347
Gold Adult	0.4348	0.4379	0.4278
Silver Adult	0.4310	0.4341	0.4237
Bronze Adult	0.4277	0.4309	0.4204
Catastrophic Adult	0.4276	0.4307	0.4203
Platinum Child	0.3614	0.3569	0.3420
Gold Child	0.3583	0.3536	0.3381
Silver Child	0.3558	0.3510	0.3352
Bronze Child	0.3531	0.3483	0.3325
Catastrophic Child	0.3530	0.3482	0.3323
Platinum Infant	0.3130	0.3166	0.2898
Gold Infant	0.3093	0.3130	0.2858
Silver Infant	0.3072	0.3109	0.2835
Bronze Infant	0.3055	0.3094	0.2817
Catastrophic Infant	0.3055	0.3094	0.2816

3. Overview of the HHS Risk Adjustment Methodology (§ 153.320)

In part 2 of the 2022 Payment Notice (86 FR 24183 through 24186), we finalized the proposal to continue to use the State payment transfer formula finalized in the 2021 Payment Notice for the 2022 benefit year and beyond, unless changed through notice-and-comment rulemaking. We explained that under this approach, we will no longer republish these formulas in future annual HHS notice of benefit and payment parameter rules unless changes are being proposed. We did not propose any changes to the formula in the proposed rule, and therefore, are not republishing the formulas in this rule. We will continue to apply the formula as finalized in the 2021 Payment Notice (86 FR 24183 through 24186)[63] in the States where HHS operates the risk adjustment program in the 2024 benefit year. Additionally, as finalized in the 2020 Payment Notice (84 FR 17466 through 17468), we will maintain the high-cost risk pool parameters for the 2020 benefit year and beyond, unless amended through notice-and-comment rulemaking. We did not propose any changes to the high-cost risk pool parameters for the 2024 benefit year; therefore, we will maintain the $1 million threshold and 60 percent coinsurance rate.

We summarize and respond to public comments received on the HHS risk adjustment methodology below.

Comment: A few commenters asserted that using a population's history of health care utilization, as the HHS-operated risk adjustment program currently does, entrenches resource disparities and barriers to health care access, and shifts resources from issuers serving lower-income communities to issuers serving higher-income communities in the State of Massachusetts. These commenters also stated that they believe HHS should include social determinants of health (SDOH) as factors in the HHS risk adjustment models. The commenters stated that using the Statewide average premium as a scaling factor in the State payment transfer formula amplifies the transfer of funds away from issuers with low-priced provider networks, who disproportionately serve lower-income communities.

Response: We appreciate these comments, which were based on findings in a report released by the Massachusetts Attorney General's Office titled *Examination of Health Care Cost Trends and Cost Drivers 2022,*[64] but do not believe that changes to the HHS-operated risk adjustment program are warranted at this time based on this report, as the findings do not appear to be applicable to other States. Following the release of the report, we analyzed available enrollee-level EDGE data to investigate whether the findings of the report were applicable in other State markets. We found that the Massachusetts merged market exhibits a unique combination of characteristics, including a highly segmented market where some issuers serve primarily CSR enrollees while other issuers primarily serve off-Exchange enrollees, and a uniquely healthy CSR population, that create an environment in which issuers that serve low-income communities can be assessed charges in that State's market risk pools. In particular, because the HHS-operated risk adjustment program is intended to transfer funds from lower-than-average risk plans to higher-than-average risk plans, a plan with a uniquely healthy population, whether because it has a uniquely healthy CSR population or a healthy general population, can be assessed a risk adjustment charge.

No other State exhibits the same combination of unique characteristics discussed in this section as the State of Massachusetts. Therefore, we have concerns about proposing changes to the HHS-operated risk adjustment program, including changes with regard to the use of the Statewide average premium as a scaling factor in the State payment transfer formula, based on a report that is Massachusetts specific and reflects the unique market conditions of a single State. Furthermore, in light of the unique combination of characteristics of Massachusetts's CSR population discussed elsewhere in this section, we believe that under the existing HHS risk adjustment methodology, the transfer charges and payments assessed in the Massachusetts merged market risk pool reflect a reasonably accurate estimate for the relative risk incurred by issuers in that State. We also reiterate that HHS chose to use Statewide average premium and normalize the risk adjustment State payment transfer formula to reflect State average factors so that each plan's enrollment characteristics are compared to the State average and the calculated payment amounts equal calculated charges in each State market risk pool.

[63] Discussion provided an illustration and further details on the State payment transfer formula.

[64] See *Examination of Health Care Cost Trends and Cost Drivers 2022.* Available at *https://www.mass.gov/files/documents/2022/11/02/2022-11-2%20COST-TRENDS-REPORT_PUB_DRAFT4_HQ.pdf.*

Thus, each plan in the risk pool receives a risk adjustment payment or charge designed to compensate for risk for a plan with average risk in a budget-neutral manner. This approach supports the overall goals of the HHS-operated risk adjustment program, which are to encourage issuers to rate for the average risk in the applicable State market risk pool, to stabilize premiums, and to avoid the creation of incentives for issuers to operate less efficiently, set higher prices, or develop benefit designs or marketing strategies to avoid high-risk enrollees.[65]

We also appreciate the comments on including SDOH as factors in the HHS risk adjustment models. In the 2023 Payment Notice, HHS solicited comments on ways to incentivize issuers to design plans that improve health equity and health conditions in enrollees' environments, as well as sought comments on the potential future collection and extraction of z codes (particularly Z55–Z65), a subset of ICD–10–CM encounter reason codes used to identify, analyze, and document SDOH, as part of the required EDGE data submissions. We continue to review and consider the public comments related to the collection and extraction of z codes to inform analysis and policy development for the HHS-operated risk adjustment program. In the interim, we note that including SDOH in the HHS-operated risk adjustment models would require careful consideration because doing so could actually increase health disparities rather than reduce them. For example, if individuals who have a particular SDOH factor in risk adjustment tended to underutilize health care services relative to their health status, including that factor in the HHS-operated risk adjustment models could perpetuate, and possibly exacerbate, the under compensation of issuers for enrollees that receive that factor in risk adjustment. Such a dynamic may incentivize risk selecting behavior among issuers. Furthermore, we have concerns about the reliability of existing data for determining if an enrollee has SDOH and what documentation would be needed from the issuer to verify them.[66] We continue to analyze data in this area, especially as new enrollee-level EDGE data elements become available, and would propose any changes to the HHS risk adjustment models or HHS-operated risk adjustment program through notice-and-comment rulemaking.

[65] 84 FR 17480 through 17484.

[66] See, for example, the analysis of z codes at 87 FR 632.

4. Repeal of Risk Adjustment State Flexibility To Request a Reduction in Risk Adjustment State Transfers (§ 153.320(d))

In the HHS Notice of Benefit and Payment Parameters for 2024 proposed rule (87 FR 78206, 78237), we proposed to repeal the flexibility under § 153.320(d) for prior participant States[67] to request reductions of risk adjustment State transfers under the State payment transfer formula in all State market risk pools for the 2025 benefit year and beyond. We also solicited comment on Alabama's requests to reduce risk adjustment State transfers in the individual (including the catastrophic and non-catastrophic risk pools) and small group markets for the 2024 benefit year. After reviewing public comments, we are approving Alabama's requests for the 2024 benefit year and finalizing the proposal to repeal the flexibility for prior participant States to request transfer reductions for the 2025 benefit year and beyond.

a. Repeal of State Flexibility To Request Transfer Reductions

In the proposed rule (87 FR 78237 through 78238), we proposed to amend § 153.320(d) to repeal the ability for prior participant States to request a reduction in risk adjustment State transfers beginning with the 2025 benefit year. As part of this repeal, we proposed conforming amendments to the introductory text of § 153.320(d), which currently provides that prior participant States may request to reduce risk adjustment transfers in all State market risk pools by up to 50 percent beginning with the 2024 benefit year, to remove this flexibility for the 2025 benefit year and beyond and limit the timeframe available for prior participants to request reductions to the 2024 benefit year only. Similarly, we proposed conforming amendments to paragraphs (d)(1)(iv) and (d)(4)(i)(B), which describe the conditions for a prior participant State to request a reduction beginning with the 2024 benefit year, to also limit these requests to the 2024 benefit year only and to eliminate the ability for prior participant States to request a reduction for the 2025 benefit year and beyond. After reviewing public comments, we are finalizing these proposals as proposed.

In the 2019 Payment Notice (83 FR 16955 through 16960), we amended § 153.320 to add paragraph (d) to provide States the flexibility to request a reduction to the applicable risk adjustment State transfers calculated by HHS using the State payment transfer formula for the State's individual (catastrophic or non-catastrophic risk pools), small group, or merged market risk pool by up to 50 percent in States where HHS operates the risk adjustment program to more precisely account for differences in actuarial risk in the applicable State's markets beginning with the 2020 benefit year. We finalized that any requests we received would be published in the applicable benefit year's proposed HHS notice of benefit and payment parameters, and the supporting evidence provided by the State in support of its request would be made available for public comment.[68]

In the 2023 Payment Notice (87 FR 27236), we limited this flexibility by finalizing amendments to § 153.320(d) that repealed the State flexibility framework for States to request reductions in risk adjustment State transfer payments for the 2024 benefit year and beyond, with an exception for prior participants.[69] We also limited the options for prior participants to request reductions by finalizing that beginning with the 2024 benefit year, States submitting reduction requests must demonstrate that the requested reduction satisfies the *de minimis* standard—that is, the premium increase necessary to cover the affected issuer's or issuers' reduced risk adjustment payments does not exceed 1 percent in the relevant State market risk pool.[70] In the 2023 Payment Notice (87 FR 27239 through 27241), we also finalized conforming amendments to the HHS approval framework in § 153.320(d)(4) to reflect the changes to the applicable criteria (that is, only retaining the *de minimis* criterion) beginning with the 2024 benefit year, and we finalized the proposed definition of ''prior participant'' in § 153.320(d)(5). In

[67] Alabama is the only State that has previously requested a reduction in risk adjustment transfers through this flexibility, and therefore, is the only State considered a ''prior participant State''.

[68] If the State requests that HHS not make publicly available certain supporting evidence and analysis because it contains trade secrets or confidential commercial or financial information within the meaning of HHS' Freedom of Information Act regulations at 45 CFR 5.31(d), HHS will only make available on the CMS website the supporting evidence submitted by the State that is not a trade secret or confidential commercial or financial information by posting a redacted version of the State's supporting evidence. See § 153.320(d)(3).

[69] Section 153.320(d)(5) defines prior participants as States that submitted a State reduction request in the State's individual catastrophic, individual non-catastrophic, small group, or merged market risk pool in the 2020, 2021, 2022, or 2023 benefit year.

[70] 87 FR 27239 through 27241. See also 83 FR 16957.

addition, we indicated our intention to propose in future rulemaking to repeal the exception for prior participants beginning with the 2025 benefit year.[71]

Since finalizing the ability for States to request a reduction of risk adjustment transfers in the 2019 Payment Notice (83 FR 16955 through 16960), we received public comments on subsequent proposed rulemakings requesting that HHS repeal this policy, with several commenters noting that reducing risk adjustment transfers to plans with higher-risk enrollees could create incentives for issuers to avoid enrolling high-risk enrollees in the future by distorting plan offerings and designs, including by avoiding broad network plans, not offering platinum plans at all, and only offering limited gold plans. Commenters further stated that issuers could also distort plan designs by excluding coverage or imposing high cost-sharing for certain drugs or services. For example, one commenter stated that the risk adjustment State payment transfer formula already adjusts for differences in types of individuals enrolled in different States and aggregate differences in prices and utilization by using the Statewide average premium as a scaling factor, so State flexibility to account for State-specific factors is unnecessary.[72] In addition, we noted that since establishing this framework, we have observed a lack of interest from States in using this policy. Only one State (Alabama) has exercised this flexibility and requested reductions to transfers in its individual and/or small group markets.[73]

As discussed in the proposed rule, HHS believes the complete repeal of the option for States to request reductions in risk adjustment State transfers will align HHS policy with section 1 of E.O. 14009 (86 FR 7793), which prioritizes protecting and strengthening the ACA and making high-quality health care accessible and affordable for all individuals. Section 3 of E.O. 14009 directs HHS, and the heads of all other executive departments and agencies with authorities and responsibilities related to Medicaid and the ACA, to review all existing regulations, orders, guidance documents, policies, and any other similar agency actions to determine whether they are inconsistent with policy priorities described in section 1 of E.O. 14009. Consistent with this directive, we reviewed the risk adjustment State flexibility under § 153.320(d) and determined it is inconsistent with policies described in sections 1 and 3 of E.O. 14009. We noted that we believe a complete repeal of § 153.320(d) will prevent the potential negative outcomes of risk adjustment State flexibility identified through public comment, including the possibility of risk selection, market destabilization, increased premiums, smaller networks, and less-comprehensive plan options, the prevention of which will protect and strengthen the ACA and make health care more accessible and affordable. For all of these reasons, we proposed to amend § 153.320(d) to repeal the flexibility for prior participant States to request reductions of risk adjustment State transfers calculated by HHS under the State payment transfer formula in all State market risk pools beginning with the 2025 benefit year. We noted in the proposed rule that if these amendments are finalized, no State will be able to request a reduction in risk adjustment transfers calculated by HHS under the State payment transfer formula starting with the 2025 benefit year.

We summarize and respond to public comments received on the proposal to repeal the flexibility for prior participant States to request reductions of risk adjustment State transfers calculated by HHS under the State payment transfer formula in all State market risk pools beginning with the 2025 benefit year below.

Comment: Several commenters supported the proposal to repeal the ability for States to request a reduction in risk adjustment State transfers due to concerns that the reduction in transfers would contribute to adverse selection, increase premiums, and reduce plan options. Commenters stated that reducing risk adjustment State transfers incentivizes issuers to ''cherry-pick'' lower-risk enrollees as they would not have to contribute the full difference in risk to support the cost of higher-risk individuals enrolled by other issuers. Commenters also noted that the HHS risk adjustment methodology already accounts for differences in State market conditions and that States can run their own risk adjustment programs if they do not think the HHS-operated risk adjustment program works for their State. Some commenters expressed concerns about the potential negative impacts, such as reduced plan quality and increased risk selection, of allowing transfer reductions in the prior participant State's markets. One commenter stated that repealing this flexibility would provide stability and certainty for the markets.

Conversely, several commenters opposed the proposal, stating that they support the ability for States to make their own decisions about how best to address the unique circumstances of their insurance markets. Some commenters also noted that HHS has the ability to review and reject these requests, indicating that there are appropriate guardrails in place such that States should continue to be offered this flexibility. Additionally, some commenters asserted that other States may develop the same market dynamics as the one prior participating State and should have the same ability to request reductions. One commenter noted concerns with the ability for States to run their own risk adjustment programs, due to the costs to implement such a program within a State. Finally, one commenter stated that the prior participant State had not observed any of the concerns regarding market destabilization or reduced plan offerings as a result of the requests, so the prior participant State should continue to be permitted to request transfer reductions.

Response: We agree with the comments submitted in support of this proposal and are finalizing as proposed the repeal of the exception for prior participant States to request a reduction in risk adjustment State transfers of up to 50 percent in any State market risk pool beginning with the 2025 benefit year. We reiterate that a strong risk adjustment program is necessary to support stability and address adverse selection in the individual and small group markets. We are concerned that retaining the State flexibility framework could undermine these goals in the long-term. As explained in 2023 Payment Notice and the proposed rule, our further consideration of prior feedback from interested parties, along with consideration of the State flexibility framework under E.O. 14009 and the very low level of interest from States since the policy was adopted, resulted in an evaluation of whether this flexibility should continue and in what

[71] Ibid.

[72] See Fielder, M, & Layton, T. (2020, December 30). *Comment Letter on 2022 Payment Notice Proposed Rule.* Brookings. *https://www.brookings.edu/wp-content/uploads/2020/12/FiedlerLaytonCommentLetterNBPP2022.pdf.*

[73] For the 2020 and 2021 benefit years, Alabama submitted a 50 percent risk adjustment transfer reduction request for its small group market, which HHS approved in the 2020 Payment Notice (84 FR 17454) and in the 2021 Payment Notice (85 FR 29164). For the 2022 and 2023 benefit years, Alabama submitted 50 percent risk adjustment transfer reduction requests for its individual and small group markets. HHS approved the State's requests for the 2022 benefit year in part 2 of the 2022 Payment Notice final rule (86 FR 24140) and approved a 25 percent reduction for Alabama's individual market State transfers (including the catastrophic and non-catastrophic risk pools) and a 10 percent reduction for the State's small group market transfers for the 2023 benefit year in the 2023 Payment Notice (87 FR 27208).

manner.[74] In the 2023 Payment Notice, we finalized the proposed amendments to § 153.320(d) to repeal the State flexibility framework beginning with the 2024 benefit year, with an exception for prior participant States.[75] We also announced our intention to propose in future rulemaking to repeal the exception for prior participants beginning with the 2025 benefit year to provide impacted parties additional time to prepare for the potential elimination of this flexibility.[76] After reviewing public comments on the proposed repeal of the exception for prior participant States, we are finalizing the repeal of the prior participant exception, as proposed.

As noted above and in the proposed rule, we believe that a complete repeal of the State flexibility framework in § 153.320(d) by removing the prior participant exception beginning with the 2025 benefit year will prevent the potential negative outcomes of States' risk adjustment transfer reduction requests identified by several commenters, including the possibility of risk selection or ''cherry-picking'' lower-risk enrollees, market destabilization, increased premiums, smaller networks, and less-comprehensive plan options. The prevention of these potential negative outcomes would serve to further protect and strengthen the ACA, protect enrollees from potential ''cherry-picking'' practices, and make health care coverage more accessible and affordable. As such, despite our ability to review and reject risk adjustment transfer reduction requests, we are still of the view that the State flexibility framework is inconsistent with policies described in sections 1 and 3 of E.O. 14009 and a complete repeal would better support the goals of the HHS-operated risk adjustment program and ultimately the ACA.

With respect to the prior participant State, the State experienced new entrants to the individual market for the 2022 benefit year, but it has seen issuers both entering and exiting its markets for the 2023 benefit year, so it is not clear that the State has seen market stabilization or improved plan quality since its reduction requests have been approved. A more detailed discussion of the prior participant State's market dynamics appears in the section below regarding Alabama's 2024 risk adjustment transfer reduction requests.

We agree with commenters who noted that States are best able to make their own decisions about how to address the unique circumstances of their insurance markets and remain the primary regulators of their insurance markets. We also understand that it is possible that other States may develop the same market dynamics as the one prior participating State. At the same time, however, States have shown a low level of interest in submitting requests to reduce transfers calculated by HHS under the State payment transfer formula. Between the 2020 benefit year and 2023 benefit year, all States had the opportunity to submit reduction requests under § 153.320(d), and yet only one State did so.[77] As discussed in the 2023 Payment Notice (87 FR 27240), we believed it was appropriate to provide a transition for the prior participant State, starting with the policies and amendments finalized in the 2023 Payment Notice that apply beginning with the 2024 benefit year. However, we continue to be concerned about the potential long-term impact of allowing reductions to risk adjustment State transfers in any State market risk pool, including the potential negative impacts on the program's ability to mitigate adverse selection and support stability in the individual and small group (including merged) markets. We are therefore finalizing a full repeal of the State flexibility framework (for all States) beginning in the 2025 benefit year in this final rule.

Furthermore, since the 2014 benefit year, all States have had the opportunity to operate their own risk adjustment program and, to date, only one State has done so.[78] Despite a broad range of market conditions across the 50 States and the District of Columbia, only two States have expressed interest in tailoring risk adjustment to address the unique circumstances of their insurance markets, which suggests States generally do not want to operate their own risk adjustment program. It also offers evidence that the HHS-operated risk adjustment program works across a broad range of market conditions to mitigate adverse selection in the individual and small group (including merged) markets. We also agree with commenters that the HHS risk adjustment methodology already accounts for differences in State market conditions. For example, the use of the Statewide average premium in the risk adjustment State payment transfer formula accounts for differences in State market conditions by scaling a plan's transfer amount based on the determination of plan average risk within a State market risk pool. The State payment transfer formula also includes a geographic cost factor (GCF), which adjusts at the rating area level for the many costs, such as input prices and medical care utilization, that vary geographically and are likely to affect premiums.[79]

Commenters are also correct that States continue to have the option to operate their own risk adjustment program if the State believes the risk adjustment program for the individual and small group (including merged) markets should be tailored to capture its State-specific dynamics. At the same time, we appreciate there are a number of different factors States consider when weighing whether to operate a State-based risk adjustment program, including but not limited to the costs associated with establishing and maintaining such a program. We stand ready to work with any State that is interested in operating its own risk adjustment program for the individual and small group (including merged) markets. Furthermore, now that we are collecting and extracting additional data elements—like plan ID, Zip Code, and rating area—from issuers' EDGE servers, as finalized in the 2023 Payment Notice (87 FR 27244 through 27252), we are better equipped to further evaluate State market conditions at various levels as we consider future changes to the HHS-operated risk adjustment program, as applicable. We also remain committed to working with States and other interested parties to encourage new market participants, mitigate adverse selection, and promote stable insurance markets through strong risk adjustment programs.

b. Requests To Reduce Risk Adjustment Transfers for the 2024 Benefit Year

For the 2024 benefit year, HHS received requests from Alabama to reduce risk adjustment State transfers for its individual[80] and small group markets by 50 percent. As in previous years, Alabama asserted that the HHS-operated risk adjustment program does not work precisely in the Alabama market, clarifying that they do not assert

[74] See 87 FR 27239 through 27241. Also see 87 FR 78237 through 78238.

[75] 87 FR 27239 through 27241.

[76] Ibid.

[77] Alabama is the only State that has requested a reduction in risk adjustment transfers through this flexibility and therefore is the only State considered a ''prior participant State''.

[78] Massachusetts operated a State-based risk adjustment program for the 2014 through 2016 benefit years.

[79] See ''March 31, 2016 HHS-Operated Risk Adjustment Methodology Meeting Discussion Paper,'' CMS (2016, March 24), available at *https://www.cms.gov/cciio/resources/forms-reports-and-other-resources/downloads/ra-march-31-white-paper-032416.pdf* for more information on the GCF.

[80] Alabama's individual market request is for a 50 percent reduction to risk adjustment transfers for its individual market non-catastrophic and catastrophic risk pools.

that the risk adjustment formula is flawed, only that it produces imprecise results in Alabama, which has an ''extremely unbalanced market share.'' The State reported that its review of issuers' 2021 financial data suggested that any premium increase resulting from a reduction of 50 percent to the 2024 benefit year risk adjustment payments for the individual market would not exceed one percent, the *de minimis* premium increase threshold set forth in § 153.320(d)(1)(iv) and (d)(4)(i)(B). Additionally, the State reported that its review of issuers' 2021 financial data also suggested that any premium increase resulting from a 50 percent reduction to risk adjustment payments in the small group market for the 2024 benefit year would not exceed the *de minimis* threshold of one percent.

In the proposed rule (87 FR 782378), we sought comment on Alabama's requests to reduce risk adjustment State transfers in its individual and small group markets by 50 percent for the 2024 benefit year. The request and additional documentation submitted by Alabama were posted under the ''State Flexibility Requests'' heading at *https://www.cms.gov/cciio/programs-and-initiatives/premium-stabilization-programs* and under the ''Risk Adjustment State Flexibility Requests'' heading at *https://www.cms.gov/CCIIO/Resources/Regulations-and-Guidance#Premium-Stabilization-Programs.*

After reviewing the public comments, we are approving Alabama's requests to reduce risk adjustment State transfers in its individual and small group markets by 50 percent for the 2024 benefit year. We summarize and respond to public comments received on Alabama's reduction requests below.

Comment: A few commenters supported Alabama's requests to reduce risk adjustment State transfers in its individual and small group markets by 50 percent for the 2024 benefit year. These commenters stated that the HHS-operated risk adjustment program is not effective in Alabama due to its extreme market dynamics and that the State has not seen a loss of broad network, platinum, or gold plans as some interested parties had feared would result from the reductions in prior years.

However, other commenters opposed Alabama's 2024 benefit year reduction requests, stating that the requested reductions would diminish the effectiveness of the HHS-operated risk adjustment program. One commenter stated that there was no mathematical reason why the presence of one large issuer would preclude the HHS-operated risk adjustment program from functioning appropriately in Alabama.

Some commenters also asserted that the State did not meet its burden to substantiate the requests under the criteria established in § 153.320(d). These commenters argued that the State did not consider in its analysis changes to the risk adjustment models, issuer participation, market conditions, benefit design offerings, network breadth, premium changes, or consumer behavior. A few of these commenters suggested that the State be required to provide more detailed analysis with its requests about the impact of transfer reductions on premiums and issuer participation. One of these commenters provided detailed data it previously submitted in comments in response to Alabama's reduction requests for the 2023 benefit year, asserting the requested individual market transfer reduction would again increase premiums for one impacted Alabama issuer by an amount greater than the *de minimis* threshold (that is, more than 1 percent increase in its premiums) for the 2024 benefit year. This commenter noted that, based on their experience from the 2022 benefit year (the first year for which the State requested and HHS approved a 50 percent reduction in risk adjustment State transfers calculated by HHS for the individual market), the 50 percent reduction in Alabama individual market transfers for 2022 led to an approximately 2 percent increase in their premiums for that year, which exceeds the *de minimis* threshold and was approved by the State in the issuer's rate filings.[81] This commenter stated that they anticipated the impact for the 2024 benefit year, were HHS to approve Alabama's requests, would be similar.

Finally, a few commenters stated that if HHS were to approve Alabama's requests, it should approve percentage reductions no higher than what it approved for the 2023 benefit year; that is, 25 percent in the individual market and 10 percent in the small group market.[82]

Response: We appreciate the comments in support of HHS's approval of Alabama's 2024 benefit year reduction requests and are approving Alabama's requests to reduce risk adjustment transfers for the 2024 benefit year in the individual and small group markets by 50 percent, as Alabama met the criteria set forth in § 153.320(d)(4)(i)(B).

We continue to believe and recognize that risk adjustment is critical to the proper functioning of the individual and small group (including merged) markets, and we acknowledge commenters' concerns that approving requested reductions in risk adjustment transfers could impact the effectiveness of the HHS-operated risk adjustment program, which is why we are repealing the exception for prior participant States to request risk adjustment transfer reductions beginning with the 2025 benefit year, as discussed in detail in the preamble section above. However, under existing HHS regulations, Alabama was permitted to submit a reduction request for the 2024 benefit year,[83] and they did so in the manner set forth in § 153.320(d)(1).[84] As such, we are obligated to consider Alabama's request consistent with the regulatory framework applicable for the 2024 benefit year.

Our review and approval of the risk adjustment State transfer reduction requests submitted by Alabama for the 2024 benefit year are guided by the framework and criteria established in regulation under § 153.320(d) applicable to prior participants. Consistent with § 153.320(d)(1)(iv), prior participants are required to demonstrate their requests satisfy the *de minimis* impact standard. Under this standard, the requesting State is required to show that the requested transfer reduction would not cause premiums in the relevant market risk pool to increase by more than 1 percent. For the 2024 benefit year, § 153.320(d)(4) provides that we will approve State reduction requests if we determine, based on a review of the State's submission, along with other relevant factors, including the premium impact of the reduction, and relevant

[81] Blue Cross and Blue Shield of Alabama Comment Letter. (2023, January 27). CMS. *https://www.regulations.gov/comment/CMS-2022-0192-0100.*

[82] See 87 FR 27208 at 27236 through 27239.

[83] As explained in the 2023 Payment Notice, we finalized amendments to § 153.320(d), including the creation of the prior participant exception following our further consideration of the State flexibility framework under E.O, 14009. See 87 FR 27240. We also announced our intention to repeal the prior participant exception in future rulemaking beginning with the 2025 benefit year to provide impacted parties additional time to prepare for this change and potential elimination of this flexibility. Ibid.

[84] The State's request must also include supporting evidence and analysis demonstrating the State-specific factors that warrant any adjustment to more precisely account for the differences in actuarial risk in the applicable market risk pool, as well as identify the requested adjustment percentage of up to 50 percent for the applicable market risk pools. See 45 CFR 153.320(d)(1)(i) and (ii). In addition, the State must submit the request by August 1 of the benefit year that is 2 calendar years prior to the applicable benefit year, in the form and manner specified by HHS. See 45 CFR 153.320(d)(2).

public comments, that the requested reduction would have a *de minimis* impact on the necessary premium increase to cover the transfers for issuers that would receive reduced transfer payments.[85]

The evidence provided by Alabama in support of its requests to reduce risk adjustment State transfers by 50 percent in its individual and small group markets was sufficient to justify its request under the *de minimis* requirement for HHS approval under § 153.320(d)(4)(i)(B). We further note that Alabama requested that, consistent with § 153.320(d)(3), HHS not publish certain information in support of its request because it contained trade secrets or confidential commercial or financial information. If the State requests that HHS not make publicly available certain supporting evidence and analysis because it contains trade secrets or confidential commercial or financial information within the meaning of the HHS Freedom of Information Act (FOIA) regulations at 45 CFR 5.31(d), HHS will only make available on the CMS website the supporting evidence submitted by the State that is not a trade secret or confidential commercial or financial information by posting a redacted version of the State's supporting evidence.[86] Consistent with the State's request, we posted a redacted version of the supporting evidence for Alabama's request. However, when evaluating the State's reduction requests, we reviewed the State's un-redacted supporting analysis, along with other data available to HHS and the relevant public comments submitted within the applicable comment period for the proposed rule. We conducted a comprehensive analysis of the available information and found the supporting evidence submitted by Alabama to be sufficient to support its 2024 benefit year requests.

We recognize there is some level of uncertainty regarding future market dynamics, including their potential impact on future benefit year transfers. However, to align with the annual pricing cycle for health insurance coverage, the applicable risk adjustment parameters (including approval or denial of State flexibility reduction requests for the 2024 benefit year from prior participants) must generally be finalized sufficiently in advance of the applicable benefit year to allow issuers to consider such information when setting rates.[87] As such, there will always be an opportunity for some uncertainty regarding the precise impact of future methodological changes (such as the risk adjustment model changes applicable beginning with the 2023 benefit year) or unforeseen events (such as unwinding and its impact on enrollment and utilization).

With respect to Alabama's 2024 benefit year requests, our review of the evidence submitted by Alabama in support of its transfer reduction requests was sufficient, along with other information available to HHS and timely submitted comments, to confirm the requests meet the criteria for approval set forth in § 153.320(d)(4)(i)(B).

For the individual market, the State provided information in support of its 50 percent reduction request, including its analysis that the reduction requested would have a *de minimis* impact on necessary premium increases. In alignment with our approach in previous years' consideration of the reduction requests, we analyzed the information provided by the State in support of its request, along with additional data and information available to HHS, separately by market and found that the request meets the *de minimis* regulatory standard in the individual market.

More specifically, we began our review of the State's individual market request with consideration of available 2021 EDGE data[88] and the State's submitted analysis. Using the most recent 2021 plan-level data available to us,[89] we estimated transfer calculations as a percent of premiums, which indicated that the risk adjustment payment recipient would not have to increase premiums by 1 percent or more to cover a 50 percent reduction in individual market transfers. Therefore, our analysis of the 2021 EDGE data supports the State's submitted analysis that the 50 percent reduction in individual market transfers for the 2024 benefit year would meet the *de minimis* regulatory standard.

We also considered detailed comments that provided evidence of changing price and market share positions, using 2021 and 2022 data, that raised questions about the impact a 50 percent reduction in individual market transfers would have on premiums. One commenter (an issuer in Alabama's individual market) stated that the 50 percent reduction in individual market transfers approved by HHS for the 2022 benefit year caused them to increase premiums by more than 2 percent.[90] The commenter believed the 25 percent reduction in individual market transfers for the 2023 benefit year would also violate the *de minimis* standard but did not provide data to this effect. However, as discussed in the prior paragraph, our analysis of the 2021 EDGE data did not provide any evidence to support these commenters' claims.

Therefore, to further consider these comments, including the prior year premium analysis from an issuer in Alabama, we analyzed open enrollment plan selection and premium data for the individual market in Alabama for the 2023 benefit year. However, due to issuers entering and exiting the Alabama individual market between the 2022 and 2023 benefit years, we found the open enrollment data were not comparable between benefit years, and we were unable to reasonably determine the effects of the transfer reductions for the 2022 benefit year on the 2023 benefit year individual market dynamics. Therefore, similar to our analysis of the 2021 EDGE data, our analysis of the 2023 benefit year open enrollment data did not align with the commenter's analysis or otherwise confirm premiums would increase by more than one (1) percent and led us to have some concerns about the commenters' estimates using a previous year's analysis that did not take into consideration new data or recent

[85] HHS is also required to publish State reduction requests and to make the State's supporting evidence available to the public for the comment, with certain exceptions. See 45 CFR 153.320(d)(3). HHS must also publish any approved or denied State reduction requests. Ibid.

[86] See § 153.320(d)(3).

[87] See 45 CFR 153.320(d)(2) and (3). Also see the 2019 Payment Notice (83 FR 16955 through 16960), which explained the timing for this process was intended to permit plans to incorporate approved adjustments in their rates for the applicable benefit year.

[88] Similar to our approach in considering Alabama's reduction requests in previous years, we considered the most recent EDGE data available (for example, for the 2023 benefit year, we considered 2020 EDGE data as part of the analysis). This included consideration of available EDGE premium and risk adjustment transfer data.

[89] Issuer specific BY 2021 risk adjustment transfers can be found in *Summary Report on Permanent Risk Adjustment Transfers for the 2021 Benefit Year.* (2022, July 19). CMS. *https://www.cms.gov/CCIIO/Programs-and-Initiatives/Premium-Stabilization-Programs/Downloads/RA-Report-BY2021.pdf.* For BY 2021, the issuer specific EDGE premium and enrollment data used for this analysis have not been made public. However, plan-level QHP rates are available in the *Health Insurance Public Use Files.* (2021). CMS. *https://www.cms.gov/CCIIO/Resources/Data-Resources/marketplace-puf.*

[90] Commenter's analysis available at BCBSAL Comment Letter on 2024 NBPP AL RA Transfer Flexibility Request. (2023, January 27). CMS. *https://www.regulations.gov/comment/CMS-2022-0192-0100.* Issuer specific BY 2021 EDGE data and BY 2023 open enrollment data are not publicly available. However, plan-level QHP rates are available in the *Health Insurance Exchange Public Use Files* (2021, 2022, 2023). CMS. *https://www.cms.gov/CCIIO/Resources/Data-Resources/marketplace-puf.*

changes in market participation in Alabama's individual market.

For the small group market, the State provided information in support of its 50 percent reduction request, including its analysis that the reduction requested would have a *de minimis* impact on necessary premium increases. HHS also analyzed enrollment and plan-level data for Alabama's small group market for 2023 in reviewing Alabama's transfer reduction request for its small group market. Due to a lack of robust enrollment data for the small group market,[91] we considered the most recent available EDGE premium and enrollment plan-level data available for the small group market to further analyze the request, as in past years. Similar to the individual market analysis, our analysis of the 2021 EDGE data supports the State's submitted analysis that the 50 percent reduction in small group market transfers for the 2024 benefit year would meet the *de minimis* regulatory standard. Using the most recent 2021 plan-level data available to us,[92] we estimated transfer calculations as a percent of premiums, which indicated that the risk adjustment payment recipient would not have to increase premiums by 1 percent or more to cover a 50 percent reduction in small group market transfers.

Therefore, as the review of information has determined that Alabama's 2024 benefit year reduction requests for its individual and small group markets would not exceed the *de minimis* threshold, we will approve the amount of the reductions requested pursuant to § 153.320(d)(4)(i)(B). The data and analysis available to us do not support a reduction smaller than what was requested by the State.

In addition, the suggestion that the presence of one large issuer would not preclude the HHS-operated risk adjustment program from functioning as intended in the State's markets is not pertinent to HHS's determination on the reduction requests, as the sole criteria we have to evaluate the 2024 benefit year requests is the *de minimis* standard in § 153.320(d)(4)(i)(B).

Following our consideration of the State's submission and public comments, we are approving Alabama's requests to reduce risk adjustment State transfers by 50 percent in its individual and small group markets for the 2024 benefit year. With the repeal of the prior participant exception in § 153.320(d), the 2024 benefit year is the last year Alabama will be able to request reductions to HHS calculated transfers under the State payment transfer formula.

5. Risk Adjustment Issuer Data Requirements (§§ 153.610, 153.700, and 153.710)

In the HHS Notice of Benefit and Payment Parameters for 2024 proposed rule (87 FR 78206, 78238), we proposed, beginning with the 2023 benefit year, to collect and extract from issuers' EDGE servers through EDGE Server Enrollment Submission (ESES) files and risk adjustment recalibration enrollment files a new data element, a Qualified Small Employer Health Reimbursement Arrangement (QSEHRA) indicator, and to include this indicator in the enrollee-level EDGE Limited Data Set (LDS) made available to qualified researchers upon request once available. We also proposed to extract plan ID and rating area data elements issuers have submitted to their EDGE servers from certain benefit years prior to 2021. We sought comment on these proposals. After reviewing public comments, we are finalizing both proposals as proposed.

Section 153.610(a) requires that health insurance issuers of risk adjustment covered plans submit or make accessible all required risk adjustment data in accordance with the data collection approach established by HHS [93] in States where HHS operates the program on behalf of a State.[94] In the 2014 Payment Notice (78 FR 15497 through 15500; § 153.720), HHS established an approach for obtaining the necessary data for risk adjustment calculations in States where HHS operates the program through a distributed data collection model that prevented the transfer of individuals' personally identifiable information (PII). Then, in several subsequent rulemakings,[95] we finalized policies for the extraction and use of enrollee-level EDGE data. The purpose of collecting and extracting enrollee-level data is to provide HHS with more granular data to use for recalibrating the HHS risk adjustment models, informing updates to the AV Calculator, conducting policy analysis, and calibrating HHS programs in the individual and small group (including merged) markets and the PHS Act requirements enforced by HHS that are applicable market-wide,[96] as well as informing policy and improving the integrity of other HHS Federal health-related programs.[97] The use of enrollee-level data extracted from issuers' EDGE servers and summary level reports produced from remote command and ad hoc queries enhances HHS' ability to develop and set policy and limits the need to pursue alternative burdensome data collections from issuers. We also previously finalized policies related to creating on an annual basis an enrollee-level EDGE LDS using masked enrollee-level data submitted to EDGE servers by issuers of risk adjustment covered plans in the individual and small group (including merged) markets and making this LDS available to requestors who seek the data for research purposes.[98] [99]

a. Collection and Extraction of the QSEHRA Indicator

We are finalizing, as proposed, that beginning with the 2023 benefit year, issuers will be required to collect and submit a QSEHRA indicator as part of the required risk adjustment data that issuers make accessible to HHS from

[91] HHS does not have the same open enrollment plan selection and premium data on the small group market in Alabama as it does for the individual market in Alabama; therefore, EDGE premium and enrollment plan-level data were used for the small group market assessment.

[92] Issuer specific BY 2021 risk adjustment transfers can be found in *Summary Report on Permanent Risk Adjustment Transfers for the 2021 Benefit Year.* (2022, July 19). CMS. *https://www.cms.gov/CCIIO/Programs-and-Initiatives/Premium-Stabilization-Programs/Downloads/RA-Report-BY2021.pdf.* For BY 2021, the issuer specific EDGE premium and enrollment data used for this analysis have not been made public. However, plan-level QHP rates are available in the *Health Insurance Public Use Files.* (2021). CMS. *https://www.cms.gov/CCIIO/Resources/Data-Resources/marketplace-puf.*

[93] Also see §§ 153.700 through 153.740.

[94] The full list of required data elements can be found in Appendix A of OMB Control Number 0938–1155/CMS–10401. (2022, May 26). Standards Related to Reinsurance, Risk Corridors, and Risk Adjustment. *https://www.cms.gov/Regulations-and-Guidance/Legislation/Paperwork ReductionActof1995/PRA-Listing-Items/CMS-10401.*

[95] See the 2018 Payment Notice, 81 FR 94101; the 2020 Payment Notice, 84 FR 17488; and the 2023 Payment Notice, 87 FR 27241.

[96] See, for example, 42 U.S.C. 300gg–300gg–28.

[97] As detailed in the 2023 Payment Notice, the finalized policies related to the permitted uses of EDGE data and reports make clear that HHS can use this information to inform policy analyses and improve the integrity of other HHS Federal health-related programs outside the commercial individual and small group (including merged) markets to the extent such use of the data is otherwise authorized by, required under, or not inconsistent with applicable Federal law. See 87 FR 27243; 87 FR 630 through 631. Examples of other HHS Federal health-related programs include the programs in certain States to provide wrap-around QHP coverage through Exchanges to Medicaid expansion populations and coverage offered by non-Federal Governmental plans. Ibid.

[98] See the 2020 Payment Notice, 84 FR 17486 through 17490 and the 2023 Payment Notice, 87 FR 27243. Also see CMS. (2022, August 15). Enrollee-Level External Data Gathering Environment (EDGE) Limited Data Set (LDS). *https://www.cms.gov/research-statistics-data-systems/limited-data-set-lds-files/enrollee-level-external-data-gathering-environment-edge-limited-data-set-lds.*

[99] As explained in the 2020 Payment Notice, we do not currently make the EDGE LDS available to requestors for public health or health care operation activities. See 84 FR 17488.

their respective EDGE servers in States where HHS operates the risk adjustment program. This new data element will be included as part of the enrollee-level EDGE data extracted from issuers' EDGE servers and summary level reports produced from remote command and ad hoc queries beginning with the 2023 benefit year.[100] We are also finalizing, as proposed, to include this indicator in the enrollee-level EDGE LDS made available to qualified researchers upon request once available (that is, beginning with 2023 benefit year data).

Beginning with the 2023 benefit year, we will provide additional operational and technical guidance on how issuers should submit this new data element to HHS through issuer EDGE servers via the applicable benefit year's EDGE Server Business Rules and the EDGE Server Interface Control Document, as may be necessary. HHS will also provide additional details on what constitutes a good faith effort to ensure collection and submission of the QSEHRA indicator in the future. HHS will seek input from issuers and other interested parties to inform development of the good faith standard and determine the most feasible methods for issuers to collect the information used to populate this data field.[101]

In the 2023 Payment Notice (87 FR 27241 through 27252), we finalized that we will collect and extract an individual coverage Health Reimbursement Arrangement (ICHRA) indicator and that we will make this indicator available in the enrollee-level EDGE LDS beginning with the 2023 benefit year. Since finalizing the collection of the ICHRA indicator as part of the enrollee-level EDGE data extracted from issuers' EDGE servers, we determined that also collecting and extracting a QSEHRA indicator would provide a more thorough picture of the actuarial characteristics of the Health Reimbursement Arrangement (HRA) population and how or whether HRA enrollment is impacting State individual and small group (including merged) market risk pools.

In the 2023 Payment Notice (87 FR 27248), we acknowledged that ICHRA information is collected by HHS from FFE or SBE–FP enrollees through the eligibility application process and from SBE enrollees through the State Exchange enrollment and payment files, as well as collected directly by issuers and their affiliated agents and brokers. We also noted the ICHRA indicator was intended to capture whether a particular enrollee's health care coverage involves (or does not involve) an ICHRA and that we will structure this data element for EDGE data submissions similar to current collections, where possible. Additionally, we explained that the collection and extraction of an ICHRA indicator as part of the required risk adjustment data submissions issuers make accessible to HHS through their respective EDGE servers provides more uniform and comprehensive information than what is submitted by FFE and SBE–FP enrollees on a QHP application and by SBE enrollees through enrollment and payment files, as it will capture both on and off Exchange enrollees.

The same is also true for QSEHRA information and we therefore proposed to apply the same approach for the QSEHRA indicator. Currently, the FFEs and SBE–FPs collect information about QSEHRAs from all applicants to determine whether they are eligible for an SEP, as individuals and their dependents who become newly eligible for a QSEHRA may be eligible for an SEP. SBEs also collect similar information from their applicants to determine SEP eligibility. This data may also be provided directly to issuers by consumers who seek to enroll in coverage directly with the issuer.

In addition, an issuer may currently have or collect information that could be used to populate the QSEHRA indicator in situations where the issuer is being paid directly by the employer through the QSEHRA for the individual market coverage. We therefore proposed to generally permit issuers to populate the required QSEHRA indicator with information from the FFE or SBE–FP enrollees or enrollees through SBEs, or from other sources for collecting this information. The QSEHRA indicator will be used to capture whether a particular enrollee's health care coverage involves (or does not involve) a QSEHRA, and we proposed to structure this data element for EDGE data submissions similar to current collections, where possible.

We also proposed, similar to the transitional approach for the ICHRA indicator finalized in the 2023 Payment Notice (87 FR 27241 through 27252), a transitional approach for the collection and extraction of the QSEHRA indicator. For the 2023 and 2024 benefit years, issuers would be required to populate the QSEHRA indicator using only data they already collect or have accessible regarding their enrollees. For example, when an FFE enrollee is using an SEP, information about QSEHRA provision is collected by the FFE, and the FFE may make these data available to issuers. In addition, as noted above, there may be situations where an issuer has or collects information that could be used to populate the QSEHRA indicator. Then, beginning with the 2025 benefit year, we proposed that the transitional approach would end, and issuers would be required to populate the QSEHRA field using available sources (for example, information from Exchanges, and requesting information directly from enrollees) and, in the absence of an existing source for particular enrollees, to make a good faith effort to ensure collection and submission of the QSEHRA indictor for these enrollees.

In conjunction with the proposal to collect and extract this new data element, we also proposed to include the QSEHRA indicator in the LDS containing enrollee-level EDGE data that HHS makes available to qualified researchers upon request once the QSEHRA indicator is available, beginning with the 2023 benefit year. We further noted that similar to the ICHRA indicator, the proposed QSEHRA indicator would not be a direct identifier that must be excluded from an LDS under the HIPAA Privacy Rule and thus would not add to the risk of enrollees being identified. As noted in the 2023 Payment Notice (87 FR 27245), only an LDS of certain masked enrollee-level EDGE data elements is made available and this LDS is available only to qualified researchers if they meet the requirements for access to such file(s), including entering into a data use agreement that establishes the permitted uses or disclosures of the information and prohibits the recipient from identifying the information.[102] [103] In addition, consistent with how we created the LDS in prior years, we would continue to exclude data from the LDS that could lead to identification of certain enrollees.[104]

[100] The deadline for submission of 2023 benefit year risk adjustment data is April 30, 2024. See § 153.730.

[101] If the burden estimate for collection of QSEHRA indicator changes beginning with the 2025 benefit year (after the transitional approach ends), the information collection under OMB control number 0938–1155 would be revised accordingly and interested parties would be provided the opportunity to comment through that process.

[102] See CMS. (2020, June). Data Use Agreement. (Form CMS–R–0235L). *https://www.cms.gov/Medicare/CMS-Forms/CMS-Forms/Downloads/CMS-R-0235L.pdf.* See also 84 FR 17486 through 17490.

[103] CMS. (2020, June). Data Use Agreement. (Form CMS–R–0235L). *https://www.cms.gov/Medicare/CMS-Forms/CMS-Forms/Downloads/CMS-R-0235L.pdf.*

[104] See, for example, CMS. (2021, August 25). Creation of the 2019 Benefit Year Enrollee-Level EDGE Limited Data Sets: Methods, Decisions and Notes on Data Use. *https://www.cms.gov/files/document/2019-data-use-guide.pdf.*

We summarize and respond to public comments received on the proposals related to the collection and extraction of a QSEHRA indicator below.

Comment: Several commenters supported the collection and extraction of a QSEHRA indicator, including the proposed transition for implementation. One commenter, while supporting the proposal, did not believe a QSEHRA indicator should factor into risk adjustment analyses or calculations, stating that issuers currently have limited information about HRA enrollment, and therefore should not be penalized for not submitting HRA data.

Many commenters opposed the proposal to collect and extract a QSEHRA indicator, citing significant operational concerns with collecting and reporting a QSEHRA indicator, including that the data are not currently or routinely collected, are difficult to obtain, are inconsistent, unreliable, and complex, and therefore, would provide little insight in policy analysis using these data, and would impose a significant burden on issuers to determine how to collect and report this data and then implement the required changes.

Response: We are finalizing, as proposed, the collection and extraction of a QSEHRA indicator, including the proposed transition for implementation. While we understand the concerns raised over the use of QSEHRA in risk adjustment, particularly that there is currently limited information about the population enrolled in QSEHRA and their associated risk, we continue to believe that it is important to collect this information to allow us to understand the associated risk profile of this population and inform our analysis about whether any refinements to the HHS risk adjustment methodology should be examined or proposed through notice- and- comment rulemaking. Consistent with the established policies governing the permitted uses of the enrollee-level EDGE data, the additional information collected through the QSEHRA indicator will also be used to inform policy analysis and potential updates to the AV Calculator, other HHS individual or small group (including merged) market programs, the PHS Act requirements enforced by HHS that are applicable market-wide, or other HHS Federal health-related programs.

To further explain, similar to the collection and reporting of an ICHRA indicator finalized in the 2023 Payment Notice, collection of a QSEHRA indicator will allow HHS to examine whether there are any unique actuarial characteristics of the QSEHRA population (such as the health status of participants), and provide a more thorough picture of the actuarial characteristics of the HRA population and how or whether HRA participation is impacting individual and small group (including merged) market risk pools. A QSEHRA indicator will also allow HHS to analyze whether the risk profile of participants in QSEHRAs differs from participants in ICHRAs as ICHRAs differ with respect to standards related to employer eligibility, employee eligibility, restrictions on allowance amounts, and eligibility for PTCs (among others). While data that may be used to populate a QSEHRA indicator may be limited or incomplete at this time, we continue to believe that collecting this information is valuable, will better inform potential refinements to the HHS-operated risk adjustment program in future years, and will improve our understanding of these markets. As occurs with any new data collection requirement, HHS expects that over time, collection and submission of a QSEHRA indicator will improve as issuers gain experience with and develop processes for collecting and reporting the indicator. In addition, we will not use the QSEHRA indicator or any analysis that relied upon the indicator to pursue changes to our policies until we conduct data quality checks and ensure the response rate is adequate to support any analytical conclusions. Therefore, we continue to believe that the benefits of finalizing the proposal related to the collection and extraction of a QSEHRA indicator outweigh potential concerns about reliability and consistency of data reporting.

Further, we proposed and are finalizing the adoption of a transitional approach for collecting the QSEHRA indicator under which issuers will be required to populate this new QSEHRA indicator using data they already have or collect for the 2023 and 2024 benefit years. This approach recognizes issuers may need time to develop processes for collection and validation of this new data element. Then, beginning with the 2025 benefit year, issuers will be required to populate the field using available sources and, in the absence of an existing source to populate the QSEHRA indicator for particular enrollees, issuers will be required to make a good faith effort to ensure collection of this data element. HHS will provide additional details on what constitutes a good faith effort to ensure collection and submission of the QSEHRA indicator in the future. Any issuers meeting this standard and making a good faith effort to ensure collection and submission of the QSEHRA indicator beginning with the 2025 benefit year data will not be penalized for being unable to submit this information for a particular individual. Similarly, HHS does not intend to penalize issuers who are unable to populate the QSEHRA indicator with existing data sources during the transitional approach for 2023 and 2024 benefit year data submissions.

We acknowledge concerns that the new data collection could impose additional administrative burden and may require operational changes to develop, test, and validate submission of these data elements. As further detailed in the section IV.C of this rule, we have estimated the burden and costs associated with this new data collection. Currently, all issuers that submit data to their EDGE servers have automated the creation of data files that are submitted to their EDGE servers for the existing required data elements, and each issuer will need to update their file creation process to include the new data element, which will require a one-time administrative cost. In addition to adding this one-time cost, we also estimate that collection and submission of the new data element will require an additional one hour of work by a management analyst on an annual basis. This estimate recognizes that information to populate the QSEHRA indicator data field is not routinely collected by all issuers at this time.

Because we are adopting a transitional approach, under which issuers will be required to populate the QSEHRA indicator data fields using data they already have or collect for the 2023 and 2024 benefit years, issuers are not required to make any changes to the manner in which they currently collect the QSEHRA data element for the 2023 and 2024 benefit year submissions. This transition period allows additional time for issuers to develop processes for collection and validation of the data required for the new data fields. We are further mitigating the burdens associated with the collection and submission of this new data element by structuring it similar to current collections, where possible. Similar to the ICHRA indicator, the QSEHRA indicator will capture whether a particular enrollee's health care coverage involves (or does not involve) a QSEHRA. HHS will provide additional operational and technical guidance on how issuers should submit this new data element to their respective EDGE servers via the applicable benefit year's EDGE Server Business Rules and the

EDGE Server Interface Control Document, as may be necessary. After consideration of comments, we continue to believe that the benefits of collecting and extracting this data element outweigh the burdens and costs associated with the new requirement.

Comment: Many commenters requested that HHS obtain QSEHRA information from other sources, such as plan administrators and/or employers.

Response: While we understand commenters' requests that we obtain QSEHRA information from other sources, such as plan administrators or employers, we decline to adopt this recommendation. We are finalizing the proposal to collect this new data element through issuers' EDGE server data to ensure that the QSEHRA data can be extracted and aggregated with other claims and enrollment information data made accessible to HHS by issuers of risk adjustment covered plans through their respective EDGE servers. This collection and extraction with claim data would not be possible if the QSEHRA data were collected from other sources, such as from plan administrators or employers.[105] As outlined in the proposed rule, similar to the ICHRA indicator, we considered that the FFEs and SBE–FPs collect information about QSEHRA from all applicants to determine whether they are eligible for an SEP, as individuals and their dependents who become newly eligible for a QSEHRA may be eligible for an SEP. We further recognize that SBEs also collect similar information from their applicants to determine SEP eligibility. However, because the enrollee-level EDGE data uses a masked enrollee ID, HHS similarly would not be able to match the QSEHRA data collected by Exchanges for SEP purposes and the enrollee-level EDGE data set. Relying on QSEHRA information provided by Exchanges also would not provide a complete picture of this HRA population as it would not include QSHERA enrollment associated with health insurance coverage purchased outside of Exchanges.

In addition, we understand an issuer may currently have or collect information that could be used to populate the QSEHRA indicator in situations where the issuer is being paid directly by the employer, through the QSEHRA, for the individual health insurance coverage. We proposed and are finalizing the policy to generally permit issuers to populate the required QSEHRA indicator with information from the FFE or SBE–FP enrollees or enrollees through SBEs, or from other sources for collecting this information. Some other sources that an issuer could use include information provided directly to issuers by consumers who seek to enroll in coverage directly with the issuer, as well as information provided to the issuer by employers or plan administrators. To limit the burden associated with populating this indicator, we will structure this data element for EDGE data submissions similar to current collections, where possible, and generally intend to use the same structure for the ICHRA and QSEHRA indicators. That is, similar to the ICHRA indicator, the QSEHRA indicator will capture whether a particular enrollee's health insurance coverage involves (or does not involve) a QSEHRA. HHS will provide additional operational and technical guidance on how issuers should submit this new data element to their respective EDGE servers, as may be necessary.

Comment: Many commenters indicated that low uptake of QSEHRAs make the data unnecessary to collect due to the limited impact these HRAs could have on risk adjustment, and that collecting and reporting of a QSEHRA indicator was generally inappropriate or unnecessary for risk adjustment purposes. Many commenters requested additional information on HHS' rationale for collecting QSEHRA data, and additional guidance on the collection and extraction of a QSEHRA indicator.

Response: We disagree with the comments that suggested it is inappropriate to consider the impact of the HRA population on the HHS-operated risk adjustment program, and those that similarly suggested low enrollment in QSEHRAs makes this proposal unnecessary. The purpose of collecting and extracting the QSEHRA indicator is to allow HHS to conduct analyses to examine whether there are any unique actuarial characteristics of this enrollee population and to investigate what impact (if any) QSEHRA participation is having on State individual and small group (including merged) market risk pools to inform risk adjustment policy development. As discussed above, the QSEHRA indicator will be used to capture whether a particular enrollee's health care coverage involves (or does not involve) a QSEHRA and will provide a more thorough picture of the actuarial characteristics of the HRA population and how or whether HRA participation is impacting individual and small group (including merged) market risk pools; and allow HHS to investigate whether the risk profile of enrollees with QSEHRAs differ from enrollees with ICHRAs. Currently, we do not have data on enrollment by individuals with QSEHRAs to analyze the risk associated with these enrollees and the impact this population may have on the individual and small group (including merged) market or the HHS-operated risk adjustment program. The rules regarding ICHRAs and QSEHRAs both became effective in 2020; thus, there is limited amount of data regarding the ICHRA and QSEHRA populations in general. Further, a recent report by HRA Council 2022 [106] highlighted that the number of both ICHRAs and QSEHRAs has increased substantially from 2020 to 2022. Therefore, including this data as part of the required EDGE data submissions will provide HHS with a more accurate and complete view and distribution of risk in the individual and small group (including merged) markets. The additional information collected through the QSEHRA indicator will be used to further analyze if any refinements to the HHS risk adjustment methodology should be examined or proposed through notice- and- comment rulemaking, such as examination of the risk profile of partial year enrollees with ICHRAs or QSEHRA given the potential for those populations to enroll through an SEP. Similarly, this information will also help inform policy analysis and potential updates to the AV Calculator, other HHS individual or small group (including merged) market programs, the PHS Act requirements enforced by HHS that are applicable market-wide or other HHS Federal health-related programs.

We also acknowledge commenters' request for additional information on submission of the QSEHRA indicator, and similar to the ICHRA indicator, we will provide additional operational and technical guidance on how issuers should submit this new data element to HHS through issuer EDGE servers via the applicable benefit year's EDGE Server Business Rules and the EDGE Server Interface Control Document, as may be necessary.

b. Extracting Plan ID and Rating Area

In addition to collecting and extracting a QSEHRA indicator, we proposed to extract the plan ID [107] and

[105] For information on the challenges associated with linking the extracted enrollee-level EDGE data to other sources, see 87 FR 631 through 632.

[106] For details of this report, see *https://hracouncil.wildapricot.org/resources/Documents/2022_HRAC_Data_FullReport_Final.pdf.*

[107] For details on the plan ID and its components, see p. 42 of the following: CMS. (2013, March 22). *CMS Standard Companion Guide Transaction Information: Instructions related to the ASC X12*

rating area data elements from the 2017, 2018, 2019, and 2020 benefit year data submissions that issuers already made accessible to HHS. In the 2023 Payment Notice (87 FR 27249), we finalized the proposal to extract these data elements beginning with the 2021 benefit year. However, we determined that to aid in annual model recalibration, as well as in our analyses of risk adjustment data, it would be beneficial to also include these two data elements as part of the enrollee-level EDGE data and reports extracted from issuers' EDGE servers for the 2017, 2018, 2019, and 2020 benefit years. Inclusion of plan ID and rating area in extractions of these additional benefit year data sets would also support analysis of other HHS individual and small group (including merged) market programs, the PHS Act requirements enforced by HHS that are applicable market-wide, as well as other HHS Federal health-related programs.

Moreover, since finalizing the 2023 Payment Notice, we have found that the analysis of risk adjustment data would be more valuable if we could compare historical trends, and access to these data elements for past years would further our ability to analyze and improve the risk adjustment program. For example, in assessing the 2020 enrollee-level EDGE data set for inclusion in the 2024 benefit year model recalibration, having access to plan ID and rating area would have allowed us to consider the different patterns of utilization and costs at a more granular level (for example, the State market risk pool level). Since issuers already collected and made available these data elements to HHS for the 2017, 2018, 2019 and 2020 benefit years,[108] we did not believe that this proposal would increase burden on issuers. We also did not propose any changes to the accompanying policies finalized in the 2023 Payment Notice with respect to these data elements and the enrollee-level EDGE Limited Data set (LDS). Although we recognized that including plan ID and rating area would enhance the usefulness of the LDS, we continue to believe it is appropriate to exclude these data elements from the LDS to mitigate the risk that entities that receive the LDS file could identify issuers based on these identifiers, particularly in areas with a small number of issuers. As such, HHS would not include these data elements (plan ID and rating area) in the LDS files made available to qualified researchers upon request.

We summarize and respond to public comments received on the proposed extraction of plan ID and rating area data elements for certain benefit years prior to 2021 below.

Comment: Many commenters supported the extraction of plan ID and rating area data elements for earlier benefit years of EDGE data and their use in risk adjustment. However, many commenters opposed the proposal to extract the plan ID and rating area data elements from issuers' EDGE servers for certain benefit years prior to 2021, citing concerns regarding privacy and security of patients' personally identifiable information (PII) and protected health information (PHI). One commenter requested that CMS reconsider their extraction altogether, as well as the extraction of zip code and subscriber ID data as finalized in the 2023 Payment Notice.

Response: We are finalizing, as proposed, the extraction of plan ID and rating area data elements for certain benefit years of EDGE data prior to 2021 as we believe that the collection of these additional data will allow HHS to better assess actuarial risk in the individual and small group (including merged) market risk pools, examine historical trends, and consider changes to improve the HHS-operated risk adjustment program. Consistent with previously finalized policies regarding the permitted uses of the enrollee-level EDGE data, HHS may also use these additional data to inform analysis and policy development for the AV Calculator and other HHS individual and small group (including merged) market programs, the PHS Act requirements enforced by HHS that are applicable market-wide, as well as other HHS Federal health-related programs.[109]

We acknowledge the concerns raised regarding the need to protect the privacy and security of patients' PII and PHI, however, we generally disagree that the extraction of plan ID and rating area data elements for these additional benefit years would increase risk of disclosure of enrollee PII, nor do they fall under the category of PHI according to the HIPAA Privacy Rule.[110] As noted in the 2023 Payment Notice (87 FR 27245), while we do not believe this data collection causes risk to the privacy or security of patients' PII, to mitigate the risk that entities that receive the LDS file could identify issuers based on these identifiers, particularly in areas with a small number of issuers, we continue to believe it is appropriate to exclude these data elements (plan ID and rating area) from the LDSs. As such, HHS will not include these data elements in the LDS files made available to qualified researchers upon request.

HHS remains committed to protecting the privacy and security of enrollees' sensitive data as initially outlined in the 2014 Payment Notice (77 FR 15434, 15471, 15498, 15500; § 153.720) regarding the risk adjustment data collection approach, which encompasses PII. As noted above, in the 2014 Payment Notice (78 FR 15497 through 15500; § 153.720), we established an approach for obtaining the necessary data for risk adjustment calculations in States where HHS operates the program through a distributed data collection model that prevented the transfer of individuals' sensitive data. We did not propose and are not finalizing any changes to the distributed data collection approach applicable to the HHS-operated risk adjustment program. As explained in the proposed 2014 Payment Notice (77 FR 73118), using a distributed data collection model[111] means HHS does not directly receive data from issuers,[112] which limits transmission of sensitive data.[113] This general framework remains unchanged. Issuers of risk adjustment covered plans will continue to provide HHS access to the applicable required risk adjustment data elements through the distributed data environment (that is, the issuer's secure EDGE server) in the HHS-specified electronic formats by the applicable deadline.[114] Issuers will continue to retain control over their data assets subject to the requirements of the HHS-operated risk adjustment program. HHS will also continue to require issuers to use a unique masked enrollee

Benefit Enrollment and Maintenance (834) transaction, based on the 005010X220 Implementation Guide and its associated 005010X220A1 addenda for the FFE. https://www.cms.gov/cciio/resources/regulations-and-guidance/downloads/companion-guide-for-ffe-enrollment-transaction-v15.pdf.

[108] As detailed in the 2023 Payment Notice, issuers have been required to submit these two data elements as part of the required risk adjustment data submissions to their respective EDGE servers to support HHS' calculation of risk adjustment transfers since the 2014 benefit year. See 87 FR 27243.

[109] See, for example, the 2018 Payment Notice, 81 FR 94101; the 2020 Payment Notice, 84 FR 17488; and the 2023 Payment Notice, 87 FR 27241–27252.

[110] 45 CFR 164.512(a).

[111] Under this model, each issuer submits to its EDGE server the required data in HHS-specified formats and must make these data accessible to HHS for use in the HHS-operated risk adjustment program. See 78 FR 15497.

[112] 77 FR 73162, 73182 through 73183. This policy was finalized in the 2014 Payment Notice final rule. See 78 FR 15497 through 15500.

[113] See 78 FR 15500. We explained that data are particularly vulnerable during transmission, and that the distributed data collection model eliminates this risk.

[114] See 45 CFR 153.610(a). See also 45 CFR 153.700 through 153.740.

identification number for each enrollee that cannot include PII and PHI,[115] along with maintaining the other existing data safeguards to protect enrollee PII and PHI.[116] [117] [118] [119] The policies finalized in this rule regarding the extraction of plan ID and rating area for certain benefit years prior to 2021 do not alter the distributed data collection approach or otherwise change any of the existing protections for enrollee PII and PHI under the HHS-operated risk adjustment program.

We also did not propose and are not finalizing any changes to the final policies adopted in the 2023 Payment Notice related to the collection and extraction of zip code and subscriber indicator.[120] The collection and extraction of these two data elements will begin with the 2023 benefit year. In addition, in the 2023 Payment Notice (87 FR 27249), we finalized the proposal to extract the plan ID and rating area data elements beginning with the 2021 benefit year. Since finalizing that proposal, we determined that to aid in annual model recalibration, as well as HHS' analyses of risk adjustment data, it would be beneficial to also include these two data elements as part of the enrollee-level EDGE data and reports extracted from issuers' EDGE servers for the 2017, 2018, 2019, and 2020 benefit years. For example, we found HHS collection and extraction of plan ID allows HHS to conduct deeper analyses when confronted with minor data anomalies to see if these trends are in fact reflective of the market or if targeted outreach to specific issuers is necessary to address data errors or potential misinterpretation of the EDGE server business rules and other applicable data requirements to improve the EDGE data quality for future benefit years. After considering comments, we are finalizing the proposals related to the collection and extraction of plan ID and rating area for the additional prior benefit years beginning with the 2017 benefit year enrollee-level EDGE data.

As previously explained, the collection and extraction of these data elements for the additional prior benefit years will help HHS further assess risk patterns and the impact of risk adjustment policies by providing valuable insight into historical trends. For example, rating area data for these additional benefit years will provide HHS with more granular data to examine and assess risk patterns and impacts based on geographic differences over time. These data will therefore be useful to examine whether changes should be proposed to the HHS risk adjustment methodology through notice-and-comment rulemaking, as well as to assist with analysis and policy development for the AV Calculator and other HHS individual and small group (including merged market) programs, the PHS Act requirements enforced by HHS that are applicable market-wide, and other HHS Federal health-related programs.

Comment: Some commenters opposed to the extraction of plan ID and rating area data elements questioned the appropriateness of using these data elements for purposes beyond the HHS-operated risk adjustment program and the AV Calculator.

Response: We acknowledge commenters concerns regarding use of the plan ID and rating area data elements use for purposes beyond the HHS-operated risk adjustment program and the AV Calculator. However, we disagree that the use of these data elements should be limited to only the HHS-operated risk adjustment program and the AV Calculator.

In several prior rulemakings,[121] we finalized policies for the extraction and use of enrollee-level EDGE data beginning with the 2016 benefit year. HHS began the collection and extraction of enrollee-level EDGE data to provide HHS with more granular data to use for recalibrating the HHS risk adjustment models and to use actual data from issuers' individual and small group (and merged) market populations, as opposed to the MarketScan® commercial database that approximates these populations, for model recalibration purposes.[122] We also previously finalized the use of the extracted masked enrollee-level EDGE data to inform updates to the AV Calculator and methodology,[123] conduct policy analysis and calibrate HHS programs in the individual and small group (including merged) markets and the PHS Act requirements enforced by HHS that are applicable market-wide,[124] [125] as well as informing policy and improving the integrity of other HHS Federal health-related programs.[126] The finalized policies related to the use of enrollee-level data extracted from issuers' EDGE servers and summary level reports produced from remote command and ad hoc queries enhance our ability to develop and set policy and limit the need to pursue alternative burdensome data collections from issuers. The use of plan ID and rating area from the 2017, 2018, 2019, and 2020 benefit year data sets beyond the risk adjustment program and AV Calculator is consistent with these previously finalized policies, including the use of these two data elements beginning with the 2021 benefit year data set for other HHS individual and small group (including merged) market programs, the PHS Act requirements enforced by HHS that are applicable market-wide, as well as other HHS Federal health-related programs.

Consistent with the use of these data elements to help further assess risk patterns for use in analysis and development of risk adjustment and AV Calculator policies, plan ID and rating area will also support HHS analysis and policy development for other HHS individual and small group (including merged) market programs, the PHS Act requirements enforced by HHS that are applicable market-wide, as well as other

[115] See 45 CFR 153.720. See also 78 FR 15509 and 81 FR 94101.

[116] As we explained in the 2018 Payment Notice, use of masked enrollee-level data safeguards enrollee privacy and security because masked enrollee-level data does not include PII. See 78 FR 15500.

[117] In addition to use of masked enrollee IDs and masked claims IDs, another protection for enrollee PII is the exclusion of enrollee date of birth from the data issuers must make accessible to HHS on their EDGE servers.

[118] The LDS policies are additional examples of protections for enrollee PII. Under these policies, HHS makes available only an LDS of certain masked enrollee-level EDGE data elements and only to qualified researchers if they meet the requirements for access to such file(s), including entering into a data use agreement that establishes the permitted uses or disclosure of the information and prohibits the recipient from identifying the information. See, for example, 84 FR 17486 through 17490 and 87 FR 27243 through 27252. Also see Data Use Agreement. CMS. *https://www.cms.gov/research-statistics-data-and-systems/files-for-order/data-disclosures-data-agreements/overview.* Further details on limited data set files available at *Limited Data Set (LDS) Files.* CMS. *https://www.cms.gov/research-statistics-data-and-systems/files-for-order/data-disclosures-data-agreements/dua_-_newlds.*

[119] The final policies to exclude plan ID, rating area and ZIP code from the LDS is also part of our commitment to protect enrollee PII to mitigate the risk that entities that receive the LDS could identify individual members, particularly in areas with a small number of issuers. See, for example, 87 FR 27243 through 27252.

[120] See 87 FR 27241 through 27252.

[121] See the 2018 Payment Notice, 81 FR 94101; the 2020 Payment Notice, 84 FR 17488; and the 2023 Payment Notice, 87 FR 27241.

[122] 81 FR 94101.

[123] Ibid.

[124] See, for example, 42 U.S.C. 300gg–300gg–28.

[125] See 81 FR 94101 and 84 FR 17488.

[126] As detailed in the 2023 Payment Notice, HHS can use the extracted EDGE data and reports to inform policy analyses and improve the integrity of other HHS Federal health-related programs outside the commercial individual and small group (including merged) markets to the extent such use of the data is otherwise authorized by, required under, or not inconsistent with applicable Federal law. See 87 FR 27243; 87 FR 630 through 631. Examples of other HHS Federal health-related programs include the programs in certain States to provide wrap-around QHP coverage through Exchanges to Medicaid expansion populations and coverage offered by non-Federal Governmental plans. Ibid.

HHS Federal health-related programs. In particular, extra benefit years of these data will be beneficial for testing policy options over multiple years of data. For example, we want to assess whether the scope of EHBs are equal to benefits provided under a typical employer plan under section 1302(b)(2)(A) of the ACA at the State level, and that analysis would benefit greatly from being tested on additional benefit years of data. As such, while we acknowledge the comments expressing concern over the use of this data for purposes beyond HHS risk adjustment and the AV Calculator, we decline to limit the use of these data to only those two areas. The utility of the plan ID and rating area data elements, along with zip code and subscriber indicator, in annual model recalibration and policy analysis to support HHS individual and small group (including merged) market programs, the PHS Act requirements enforced by HHS that are applicable market-wide, and other Federal-health related programs outweighs any gains from not finalizing the extraction of plan ID and rating area from certain prior benefit years as proposed or repealing the EDGE data extraction and permitted use policies finalized in the 2023 Payment Notice.

Comment: One commenter specifically requested that HHS consider releasing the plan ID and rating area data elements as part of the EDGE LDS by aggregating the information at the county level to assuage privacy and security concerns.

Response: While we recognize including the plan ID and rating area data elements may enhance the usefulness of the LDS for researchers, we continue to believe it is appropriate to exclude these data elements from the LDS to mitigate the risk that entities that receive the LDS file could identify issuers based on these identifiers, particularly in areas with a small number of issuers. While aggregating data at the county level, as suggested, could mitigate this concern in many cases, it would not completely eliminate the possibility that counties with small numbers of issuers could be identified by these data elements. We also did not propose to release these data as part of the LDS at the county level and decline to adopt the suggestion as part of this final rule.

6. Risk Adjustment User Fee for 2024 Benefit Year (§ 153.610(f))

HHS proposed a risk adjustment user fee for the 2024 benefit year of $0.21 PMPM. We sought comment on this proposal. After review of the comments received, we are finalizing the proposed risk adjustment user fee for the 2024 benefit year as proposed.

Under § 153.310, if a State is not approved to operate, or chooses to forgo operating, its own risk adjustment program, HHS will operate risk adjustment on its behalf. As noted previously in this final rule, for the 2024 benefit year, HHS will operate the risk adjustment program in every State and the District of Columbia. As described in the 2014 Payment Notice (78 FR 15416 through 15417), HHS' operation of risk adjustment on behalf of States is funded through a risk adjustment user fee. Section 153.610(f)(2) provides that, where HHS operates a risk adjustment program on behalf of a State, an issuer of a risk adjustment covered plan must remit a user fee to HHS equal to the product of its monthly billable member enrollment in the plan and the PMPM risk adjustment user fee specified in the annual HHS notice of benefit and payment parameters for the applicable benefit year.

OMB Circular No. A–25 established Federal policy regarding user fees, and specifies that a user charge will be assessed against each identifiable recipient for special benefits derived from Federal activities beyond those received by the general public.[127] The HHS-operated risk adjustment program provides special benefits as defined in section 6(a)(1)(B) of OMB Circular No. A–25 to issuers of risk adjustment covered plans because it mitigates the financial instability associated with potential adverse risk selection.[128] The risk adjustment program also contributes to consumer confidence in the health insurance industry by helping to stabilize premiums across the individual, merged, and small group markets.

In the 2023 Payment Notice (87 FR 27252), we calculated the Federal administrative expenses of operating the risk adjustment program for the 2023 benefit year to result in a risk adjustment user fee rate of $0.22 PMPM based on our estimated costs for risk adjustment operations and estimated BMM for individuals enrolled in risk adjustment covered plans. For the 2024 benefit year, HHS proposed to use the same methodology to estimate our administrative expenses to operate the risk adjustment program. These costs cover development of the models and methodology, collections, payments, account management, data collection, data validation, program integrity and audit functions, operational and fraud analytics, interested parties training, operational support, and administrative and personnel costs dedicated to risk adjustment program activities. To calculate the risk adjustment user fee, we divided HHS' projected total costs for administering the risk adjustment program on behalf of States by the expected number of BMM in risk adjustment covered plans in States where the HHS-operated risk adjustment program will apply in the 2024 benefit year.

We estimated that the total cost for HHS to operate the risk adjustment program on behalf of States for the 2024 benefit year will be approximately $60 million, which remains stable with the approximately $60 million estimated for the 2023 benefit year. We also projected higher enrollment than our prior estimates in the individual and small group (including merged) markets in the 2023 and 2024 benefit years based on the increased enrollment between the 2020 and 2021 benefit years, due to the increased PTC subsidies provided for in the American Rescue Plan Act of 2021 (ARP).[129] [130] In light of the passage of the Inflation Reduction Act of 2022 (IRA), in which section 12001 extended the enhanced PTC subsidies in section 9661 of the ARP through the 2025 benefit year, we projected increased 2021 enrollment levels to remain steady through the 2025 benefit year.[131] Because this provision of the IRA is expected to promote continued higher enrollment, we proposed a slightly lower risk adjustment user fee of $0.21 PMPM.

We summarize and respond to public comments received on the proposed 2024 benefit year risk adjustment user fee rate below.

Comment: We received a few comments in support of the 2024 benefit year risk adjustment user fee rate.

Response: We appreciate the support and are finalizing, as proposed, a risk adjustment user fee rate for the 2024 benefit year of $0.21 PMPM.

7. Risk Adjustment Data Validation Requirements When HHS Operates Risk Adjustment (HHS–RADV) (§§ 153.350 and 153.630)

HHS will conduct HHS–RADV under §§ 153.350 and 153.630 in any State

[127] OMB. (1993). *OMB Circular No. A–25 Revised, Transmittal Memorandum No. https://www.whitehouse.gov/wp-content/uploads/2017/11/Circular-025.pdf.*

[128] Ibid.

[129] ARP. Public Law 117–2 (2021).

[130] CMS. (2022, July 19). *Summary Report on Permanent Risk Adjustment Transfers for the 2021 Benefit Year.* (p. 9). *https://www.cms.gov/CCIIO/Programs-and-Initiatives/Premium-Stabilization-Programs/Downloads/RA-Report-BY2021.pdf.*

[131] Inflation Reduction Act. Public Law 117–169 (2022).

where HHS is operating risk adjustment on a State's behalf.[132] The purpose of HHS–RADV is to ensure issuers are providing accurate high-quality information to HHS, which is crucial for the proper functioning of the HHS-operated risk adjustment program. HHS–RADV also ensures that risk adjustment transfers reflect verifiable actuarial risk differences among issuers, rather than risk score calculations that are based on poor quality data, thereby helping to ensure that the HHS-operated risk adjustment program assesses charges to issuers with plans with lower-than-average actuarial risk while making payments to issuers with plans with higher-than-average actuarial risk. HHS–RADV consists of an initial validation audit (IVA) and a second validation audit (SVA). Under § 153.630, each issuer of a risk adjustment covered plan must engage an independent initial validation audit (IVA) entity. The issuer provides demographic, enrollment, and medical record documentation for a sample of enrollees selected by HHS to its IVA entity for data validation. Each issuer's IVA is followed by an SVA, which is conducted by an entity HHS retains to verify the accuracy of the findings of the IVA. Based on the findings from the IVA, or SVA (as applicable), HHS conducts error estimation to calculate an HHS–RADV error rate. The HHS–RADV error rate is then applied to adjust the plan liability risk scores of outlier issuers, as well as the risk adjustment transfers calculated under the State payment transfer formula for the applicable State market risk pools, for the benefit year being audited.[133]

a. Materiality Threshold for Risk Adjustment Data Validation

Beginning with 2022 benefit year HHS–RADV, we proposed to change the HHS–RADV materiality threshold definition, first implemented in the 2018 Payment Notice (81 FR 94104 through 94105), from $15 million in total annual premiums Statewide to 30,000 total BMM Statewide, calculated by combining an issuer's enrollment in a State's individual non-catastrophic, catastrophic, small group, and merged markets, as applicable, in the benefit year being audited.[134] We are finalizing the change to the HHS–RADV materiality threshold definition as proposed.

Consistent with the application of the current materiality threshold definition and accompanying exemption under § 153.630(g)(2), we proposed that issuers that fall below the new proposed materiality threshold would not be subject to the annual IVA (and SVA) audit requirements, but may be selected to participate in a given benefit year of HHS–RADV based on random sampling or targeted sampling due to the identification of any risk-based triggers that warrant more frequent audits. We did not propose any changes to the regulatory text at § 153.630(g)(2) or to the other accompanying policies. We solicited comments on this proposal as well as sought comments on whether we should increase the materiality threshold to $17 million in total annual premiums Statewide instead of switching to 30,000 BMM Statewide and on the applicability date for when a new HHS–RADV materiality threshold definition should begin to apply.

In the 2020 Payment Notice (84 FR 17508 through 17511), HHS established § 153.630(g) to codify exemptions to HHS–RADV requirements, including an exemption for issuers that fell below a materiality threshold, as defined by HHS, to ease the burden of annual audit requirements for smaller issuers of risk adjustment covered plans that do not materially impact risk adjustment transfers.[135] This materiality threshold was first implemented and defined in the 2018 Payment Notice (81 FR 94104 through 94105), where HHS finalized a policy that issuers with total annual premiums at or below $15 million (calculated based on the Statewide premiums of the benefit year being validated) would not be subject to annual IVA requirements, but would still be subject to random and targeted sampling.[136] Issuers below the materiality threshold are subject to an IVA approximately every 3 years, barring any risk-based triggers that warrant more frequent audits.

Under the new materiality threshold definition, beginning with the 2022 benefit year of HHS–RADV, issuers that fall below 30,000 BMM Statewide will be exempt from participating in the annual HHS–RADV IVA and SVA audit requirements if not otherwise selected by HHS to participate under random and targeted sampling conducted approximately every 3 years (barring any risk-based triggers based on experience that will warrant more frequent audits). To determine whether an issuer falls under the materiality threshold, its BMM will be calculated Statewide, that is, by combining an issuer's enrollment in a State's individual non-catastrophic, catastrophic, small group, and merged markets, as applicable, in the benefit year being audited. Issuers that qualify for the exemption under § 153.630(g)(2) from HHS–RADV requirements for a particular benefit year must continue to maintain their risk adjustment documents and records consistent with § 153.620(b) and may be required to make those documents and records available for review or to comply with an audit by the Federal Government.[137] If an issuer of a risk adjustment covered plan that falls within the materiality threshold is not exempt from HHS–RADV for a given benefit year (for example, if the issuer is selected as part of random or targeted sampling), and fails to engage an IVA or submit IVA results to HHS, the issuer will be subject to the default data validation charge in accordance with § 153.630(b)(10) and may be subject to other enforcement action. Lastly, an issuer that qualifies for an exemption under § 153.630(g)(2) from HHS–RADV requirements for a particular benefit year will not have its risk scores and State transfers adjusted due to its own risk score error rate(s), but its risk scores and State transfers could be adjusted if other issuers in the applicable State market risk pools were identified as outliers in that benefit year of HHS–RADV.

We summarize and respond to public comments received on the proposed change to the HHS–RADV materiality threshold definition from $15 million in total annual premiums Statewide to 30,000 total BMM Statewide beginning

[132] HHS has operated the risk adjustment program in all 50 States the District of Columbia since the 2017 benefit year.

[133] HHS transitioned from a prospective application of HHS–RADV error rates for non-exiting issuers to apply HHS–RADV error rates to the risk scores and risk adjustment State transfers of the benefit year being audited for all issuers beginning with the 2020 benefit year of HHS–RADV. See 85 FR 77002–77005.

[134] Activities related to the 2022 benefit year of HHS–RADV generally began in March 2023, when issuers could start selecting their IVA entity, and IVA entities could start electing to participate in HHS–RADV for the 2022 benefit year. See, for example, the 2021 Benefit Year HHS–RADV Activities Timeline (May 3, 2022), available at *https://regtap.cms.gov/uploads/library/HRADV_2021Timeline_5CR_050322.pdf* and the 2022 Benefit Year HHS–RADV Timeline (March 1, 2023), available at *https://regtap.cms.gov/uploads/library/HRADV_2022_timeline_5CR_022323.pdf.*

[135] Additionally, in the 2019 Payment Notice (83 FR 16966), we finalized an exemption from HHS–RADV for issuers with 500 or fewer BMM Statewide in the benefit year being audited. This very small issuer exemption is codified at § 153.630(g)(1). Issuers with 500 or fewer BMM Statewide are not subject to random or targeted sampling.

[136] While the 2018 Payment Notice (81 FR 94104 through 94105) provided an applicability date for the materiality threshold that began with the 2017 benefit year of HHS–RADV, we postponed the application of the materiality threshold to the 2018 benefit year in the 2019 Payment Notice (83 FR 16966 through 16967).

[137] See § 153.620(b) and (c).

with the 2022 benefit year of HHS–RADV below.

Comment: Most commenters supported the proposal to change the HHS–RADV materiality threshold definition from $15 million in total annual premiums Statewide to 30,000 total BMM, calculated by combining an issuer's enrollment in a State's individual non-catastrophic, catastrophic, small group, and merged markets, as applicable, in the benefit year being audited. One commenter agreed that the proposed change to the materiality threshold definition will continue to ease the administrative burden associated with HHS–RADV audits.

Many of these commenters asserted that a BMM-based threshold would be more consistent over time and across geographies as the threshold would not be impacted by premium increases or variation in health care costs. Another commenter stated that the proposed BMM-based threshold would eliminate the need for the materiality threshold to be updated over time. One commenter agreed that shifting the materiality threshold to a BMM basis would align with the 500 BMM threshold used to exempt very small issuers from HHS–RADV. This commenter also noted that the alternative proposal to increase the threshold from $15 million in total annual premiums Statewide to $17 million in total annual premiums indicates that a non-indexed dollar threshold could increase the number of issuers subject to annual HHS–RADV audits over time.

However, one commenter opposed changing the materiality threshold to 30,000 BMM and stated that allowing some issuers to be exempt for annual HHS–RADV audit requirements reduces accountability and transparency. One commenter encouraged HHS to consider changing the materiality threshold for HHS–RADV to a percentage of Statewide member months to reduce the burden of HHS–RADV on issuers that do not materially impact a State's risk adjustment transfers. Another commenter asked that HHS investigate how to balance the frequency of issuers randomly sampled each year within a parent company and stated that historical random samples have not produced a balanced volume of issuers year to year.

Response: After considering comments, we are finalizing this policy as proposed to change the HHS–RADV materiality threshold definition from $15 million in total annual premiums Statewide to 30,000 total BMM Statewide beginning with the 2022 benefit year of HHS–RADV. Consistent with the original adoption of the materiality threshold for HHS–RADV, we believe that this policy and updated definition will continue to ease the administrative burden of annual HHS–RADV requirements for smaller issuers of risk adjustment covered plans that do not materially impact risk adjustment transfers. We also continue to believe that this exemption will have a minimal impact on HHS–RADV as issuers of risk adjustment covered plans below the 30,000 BMM threshold are estimated to represent less than 1.5 percent of enrollment in risk adjustment covered plans nationally. We believe that continuing to use a threshold representing risk adjustment covered plans that cover less than 1.5 percent of membership nationally promotes the goals of HHS–RADV while also considering the burden of such a process on smaller issuers.

As explained in the proposed rule (87 FR 78242 through 78243), since we established the materiality threshold definition of $15 million in total premiums, the estimated costs to complete the IVA have increased, especially with the addition of prescription drug categories to the adult models starting with the 2018 benefit year. Therefore, we believe that it is necessary and appropriate to update the materiality threshold definition to better align with current costs to complete an IVA. We estimated the current cost of the IVA to be approximately $170,000 per an issuer. To continue the overall design of the materiality threshold policy and effectively limit the proportion of an issuer's premiums that will be used to cover IVA costs to one (1) percent, we would need to increase the materiality threshold to $17 million in total annual premiums Statewide. While we considered using another dollar value to update the materiality threshold definition, we believe that using BMMs instead of a dollar threshold ensures that the materiality threshold definition under § 153.630(g)(2) will continue to exempt small issuers that face a disproportionally higher burden for conducting HHS–RADV audit, even in situations where PMPM premiums grow overtime. We therefore proposed and are finalizing a materiality threshold of 30,000 BMM Statewide, which translates to approximately $17 million in total annual premiums Statewide on average across markets.

Shifting the materiality threshold under § 153.630(g)(2) to a BMM basis will also align with the threshold established in § 153.630(g)(1), which exempts issuers with 500 or fewer BMM Statewide in the benefit year being audited from HHS–RADV requirements, including random and targeted sampling. As part of this change, we considered whether the new BMM-based threshold would significantly impact other issuers of risk adjustment covered plans. We analyzed historical data on issuers of risk adjustment covered plans and found that the pool of issuers falling below a 30,000 BMM Statewide threshold does not significantly differ from the current pool of issuers falling below a $15 million total annual premiums Statewide threshold.[138] Therefore, we do not anticipate that the new materiality threshold definition will change the current estimated burdens of the annual HHS–RADV requirements or significantly impact other issuers of risk adjustment covered plans. While we would expect the number of issuers falling under a premium-dollar-based materiality threshold to decrease overtime as PMPM premiums grow, we expect the BMM-based threshold to produce a consistent pool of issuers subject to random and targeted sampling over time and across State market risk pools.

We did not consider using a percentage of Statewide member months as the metric for the materiality threshold as that metric does not have a relationship with the costs to conduct HHS–RADV. As such, after considering comments, we are finalizing the new materiality threshold definition of 30,000 BMM as proposed, beginning with the 2022 benefit year of HHS–RADV. As noted above, the materiality threshold was initially set after considering the fixed costs associated with hiring an IVA entity and submitting results to HHS, which may represent a large portion of some issuers' administrative costs. We estimated that 30,000 BMM Statewide translates to approximately $17 million in total annual premiums Statewide on average across markets, and therefore anticipate that issuers above this threshold will not spend more than one (1) percent of their premiums on covering the estimated $170,000 cost of the initial validation audit.

Finally, we do not believe that it is necessary to investigate the balance of the frequency of issuers randomly sampled each year within a parent company. The purpose of conducting random audits is for these audits to be random and not controlled to limit the frequency that specific issuers, including issuers within a particular parent company, are selected. We also note that in addition to conducting

[138] See 87 FR 78242 through 78243.

random audits of issuers of risk adjustment covered plans that fall below the materiality threshold definition, issuers that fall below the materiality threshold definition can be selected to participate in HHS–RADV due to the targeted sampling based on the identification of risk-based triggers that warrant more frequent audits.[139]

b. HHS–RADV Adjustments for Issuers That Have Exited the Market

Beginning with 2021 benefit year HHS–RADV, we proposed to remove the policy to only apply an exiting issuer's HHS–RADV results if that issuer is a positive error rate outlier.[140] We proposed to change this policy because it is no longer necessary to treat exiting issuers differently from non-exiting issuers when they are negative error rate outliers in the applicable benefit year's HHS–RADV given the transition to the concurrent application of HHS–RADV results for all issuers. We solicited comments on this proposal. After reviewing the public comments, we are finalizing the removal of this policy as proposed.

We did not propose any other changes to the policies regarding HHS–RADV adjustments for issuers that exit the market, and therefore, will otherwise maintain the existing framework for determining whether an issuer is an exiting issuer. As such, the issuer will have to exit all of the market risk pools in the State (that is, not selling or offering any new plan in the State) to be considered an exiting issuer. If an issuer only exits some of the markets or risk pools in the State, but continues to sell or offer new plans in others, it will not be considered an exiting issuer. Small group market issuers with off-calendar year coverage who exit the market and only have carry-over coverage that ends in the next benefit year (that is, carry-over of run out claims for individuals enrolled in the previous benefit year, with no new coverage being offered or sold) will be considered an exiting issuer and will be exempt from HHS–RADV under § 153.630(g)(4). Individual market issuers offering or selling any new individual market coverage in the State in the subsequent benefit year will be required to participate in HHS–RADV, unless another exemption applies.

We summarize and respond to public comments received on the proposal to remove the policy to only apply an exiting issuer's HHS–RADV results if that issuer is a positive error rate outlier beginning with the 2021 benefit year below.

Comment: All commenters who commented on this policy change supported the proposal to remove the policy that prevented the application of an exiting issuer's HHS–RADV results when the issuer is a negative error rate outlier. A few commenters agreed that it is no longer necessary to treat exiting issuers differently from non-exiting issuers when an issuer is a negative error rate outlier given the transition to the concurrent application of HHS–RADV results to the risk scores and risk adjustment transfers of the benefit year being audited for all issuers.

Response: We agree with commenters that the policy that limited the application of exiting issuers' HHS–RADV results to situations where the issuer was identified as a positive error rate outlier in the applicable benefit year of HHS–RADV is no longer needed. We are finalizing the removal of this policy and will begin adjusting the plan liability risk scores for all positive and negative error rate outlier issuers (inclusive of exiting and non-exiting issuers) beginning with the 2021 benefit year of HHS–RADV.

c. Discontinue Lifelong Permanent Conditions List and Use of Non-EDGE Claims in HHS–RADV

In the HHS Notice of Benefit and Payment Parameters for 2024 proposed rule (87 FR 78206, 78224), we sought comment on discontinuing the use of the Lifelong Permanent Conditions (LLPC) list[141] and the use of non-EDGE claims starting with the 2022 benefit year of HHS–RADV. We solicited comment on all aspects of these potential changes, including the applicability date. We also requested comment on the extent that issuers and their IVA entities have relied on these policies and on how these potential changes may impact issuers. After reviewing the public comments, we will discontinue the use of the LLPC list and the policy that permitted the use of non-EDGE claims beginning with the 2022 benefit year of HHS–RADV. We will update the HHS–RADV Protocols to capture these changes for the 2022 benefit year and beyond.

The LLPC list was developed for HHS–RADV medical record abstraction purposes beginning with the 2016 benefit year, when issuers were first learning the HHS–RADV Protocols and still gaining experience with EDGE data submissions.[142] While the LLPC list was developed for HHS–RADV medical record abstraction purposes, the EDGE Server Business Rules for risk adjustment EDGE data submissions direct that EDGE server data submissions are claim-based and follow standard coding principles and guidelines. EDGE Server Business Rules require that diagnosis codes submitted to the EDGE server be related to medical services performed during the patient's visit, be performed by a State licensed medical provider, be associated with a paid claim submitted to the issuer's EDGE server, and be associated with an active enrollment period with the issuer for the applicable risk adjustment benefit year.[143] Some issuers have raised concerns that the LLPC list may incentivize issuers to submit EDGE supplemental diagnosis files containing LLPC diagnoses even though those diagnoses may not have been addressed in a claim submitted to the EDGE server for that encounter. While we allowed the use of the LLPC list for the last several years of HHS–RADV, we continued to consider these issues and solicited comments on the discontinuance of the use of the LLPC list beginning with the 2022 benefit year of HHS–RADV.

Similarly, we sought comments on discontinuing the current policy that permits the use of non-EDGE claims in HHS–RADV beginning with the 2022 HHS–RADV benefit year. Under § 153.630(b)(6), issuers are required to

[139] See § 153.630(g)(2).

[140] To qualify as an exiting issuer, an issuer must exit all of the market risk pools in the State (that is, not selling or offering any new plans in the State). If an issuer only exits some markets or risk pools in the State, but continues to sell or offer new plans in others, it is not considered an exiting issuer. A small group market issuer with off-calendar year coverage who exits the market but has only carry-over coverage that ends in the next benefit year (that is, carry-over of run out claims for individuals or groups enrolled in the previous benefit year, with no new coverage being offered or sold) is considered an exiting issuer. See the 2020 Payment Notice, 84 FR 17503 through 17504.

[141] See, for example, Appendix C: Lifelong Permanent Conditions in the 2021 Benefit Year PPACA HHS Risk Adjustment Data Validation (HHS–RADV) Protocols (November 9, 2022) available at *https://regtap.cms.gov/uploads/library/HRADV_2021_Benefit_Year_Protocols_5CR_110922.pdf.* Also see, for example, Appendix E: Lifelong Permanent Conditions in the 2018 Benefit Year PPACA HHS Risk Adjustment Data Validation (HHS–RADV) Protocols (June 24, 2019) available at *https://regtap.cms.gov/uploads/library/HRADV_2018Protocols_070319_RETIRED_5CR_070519.pdf.*

[142] CMS first published the ''Chronic Condition HCCs'' list in the 2016 Benefit Year PPACA HHS Risk Adjustment Data Validation (HHS–RADV) Protocols (October 20, 2017) available at *https://regtap.cms.gov/uploads/library/HRADV_2016Protocols_v1_5CR_052218.pdf.* Beginning with 2018 benefit year, CMS has provided the ''Lifelong Permanent Conditions'' list, a simplified list of health conditions which share similar characteristics as those on the ''Chronic Condition HCCs'' list. See supra note 117.

[143] See, for example, Section 8.1 Guidance on Diagnosis Code(s) Derived from Health Assessments of the EDGE Server Business Rules (ESBR) (November 1, 2022) available at *https://regtap.cms.gov/uploads/library/DDC-ESBR-110122-5CR-110122.pdf.*

provide their IVA entity with all relevant claims data and medical record documentation for the enrollees selected for audit. HHS currently allows issuers to submit medical records to their IVA entity for which no claim was accepted into the EDGE server in certain situations.[144] Under the non-EDGE claims policy, if issuers identify medical records with no associated EDGE server claim in HHS–RADV, they must demonstrate that a non-EDGE claim meets risk adjustment eligibility criteria. Issuers must also allow the IVA entity to view the associated non-EDGE claim, and IVA entities must record their validation results in their IVA Entity Audit Results Submission.[145] As part of our ongoing effort to examine ways to better align HHS–RADV guidance and the EDGE Server Business Rules, and in recognition of the experience issuers have gained with HHS–RADV and EDGE data submissions, we solicited comments on discontinuing the use of non-EDGE claims in HHS–RADV beginning with the 2022 benefit year.

We summarize and respond to public comments received on discontinuing the use of the LLPC list and the use of non-EDGE claims in HHS–RADV below.

Comment: Several commenters supported discontinuing the use of the LLPC list and a few commenters supported discontinuing the use of non-EDGE claims. Many of these commenters raised data integrity concerns created by the allowance of the use of the LLPC and non-EDGE claims in HHS–RADV. Some commenters asserted there is a current misalignment between EDGE Server Business Rules and HHS–RADV that creates opportunities for issuers to submit data to the EDGE server without following the EDGE Server Business Rules and then receive credit for this data in HHS–RADV. Several commenters supported consistency between the EDGE Server Business Rules and what is allowable in HHS–RADV by discontinuing the use of the LLPC list and non-EDGE claims in HHS–RADV. One of these commenters asserted that the LLPC list creates an asymmetry between the rules auditors use for HCC validation and the rules issuers use for submitting HCCs to EDGE by granting auditors a more permissive set of rules for HCC validation, which thereby allows an issuer's risk score to reflect the strength of their compliance department. Another of these commenters asserted that ending the policy that permitted the use of non-EDGE claims in HHS–RADV will provide consistency between the data submission and its validation.

One commenter stated that discontinuing the LLPC list will level the playing field for all issuers. Two commenters expressed concerns about the use of dated information to justify diagnoses and upcoding in the current benefit year. One of these commenters expressed concern that the LLPC list was created as an administrative convenience despite there being a wide range of treatments and outcomes within the same diagnosis on the LLPC list. Another commenter raised concerns about individuals with diagnoses on the LLPC list enrolling in a new plan during periods when these diagnoses do not require treatment and the issuers of the new plans covering these individuals receiving credit for those LLPC HCCs in HHS–RADV. This commenter also suggested that, under a concurrent risk adjustment model, issuers should get credit for diagnoses that are treated during the benefit year being risk adjusted and should not be allowed to rely on historic data or documentation from before the applicable coverage period.

Response: HHS agrees with commenters that supported the discontinuation of the LLPC list and non-EDGE claims in HHS–RADV as we seek to better align HHS–RADV policies with the EDGE Server Business Rules. We also believe that issuers have gained years of experience with EDGE data submissions and HHS–RADV activities, such that it is now appropriate to discontinue use of the LLPC list and non-EDGE claims in HHS–RADV. The LLPC list was not created to supplement or replace the EDGE Server Business Rules that issuers must follow to submit diagnoses conditions to EDGE with the necessary medical record documentation. Instead, HHS created the LLPC list in the early years of HHS–RADV to ease the burden of medical record retrieval for lifelong conditions in HHS–RADV by simplifying and standardizing coding abstraction for IVA and SVA entities. The conditions included in the LLPC list are those that require ongoing medical attention and are typically unresolved once diagnosed. While a range of treatments and outcomes may exist within the same diagnosis on the LLPC list, the HHS–HCC diagnostic classification is a key component of the HHS risk adjustment models. The basis of the HHS risk adjustment model uses health plan enrollee diagnoses to predict medical expenditure risk. To do this, tens of thousands of diagnostic codes are grouped into a smaller number of organized condition categories that aggregate into HCCs to produce a diagnostic profile of each enrollee.[146] The HCCs in the HHS risk adjustment models were selected to reflect salient medical conditions and cost patterns for adult, child, and infant subpopulations. The models produce coefficients for each HCC that incorporate the range of treatments and outcomes for those diagnoses as they represent the marginal predicted plan liability expenditures of an enrollee with that HCC given that enrollee's other risk markers. The HHS risk adjustment models also include interacted HCC counts factors beginning with the 2023 benefit year that will further capture the range of plan liability that may exist within the same diagnoses. For these reasons, we believe that continuing the policy to permit use of the LLPC list is no longer necessary and its removal will better align HHS–RADV guidance with the EDGE Server Business Rules, as well as ensure that audit entities follow the same standard coding principles and guidelines for HHS–RADV that issuers must follow when submitting data to EDGE. As detailed in the HHS–RADV Protocols, issuers and entities should refer to the conventions in the ICD–10–CM and ICD10–PCS classification, ICD–10–CM Official Coding Guidelines for Coding and Reporting, and the American Hospital Association (AHA) Coding Clinic Standard for coding guidance, including the coding of chronic conditions.[147]

[144] See, for example, Section 9.2.6.5: Documentation of Claims Not Accepted in EDGE of the 2021 Benefit Year PPACA HHS Risk Adjustment Data Validation (HHS–RADV) Protocols (August 17, 2022) available at *https://regtap.cms.gov/uploads/library/HRADV_2021_Benefit_Year_Protocols_v1_5CR_081722.pdf.*

[145] Under the current policy, the non-EDGE claim must be risk adjustment eligible paid/positively adjudicated within the benefit year for the specified sampled enrollee. Although the non-EDGE claim would have been accepted to EDGE had it met the EDGE submission deadline, diagnoses associated with non-EDGE claims are not included in the risk adjustment risk score calculations in the June 30th Summary Report on Permanent Risk Adjustment Transfers. Diagnoses associated with non-EDGE claims are only used as an option for HCC validation purposes in HHS–RADV when the applicable criteria are met.

[146] See The HHS–HCC Risk Adjustment Model for Individual and Small Group Markets under the Affordable Care Act, Medicare & Medicaid Research Review, Volume 4, Number 3 (2014) available at *https://www.cms.gov/mmrr/Downloads/MMRR2014_004_03_a03.pdf.* Also see, for example, Chapter 2: HHS–HCC Diagnostic Classification of the March 31, 2016, HHS-Operated Risk Adjustment Methodology Meeting Discussion Paper (March 24, 2016) available at *https://www.cms.gov/cciio/resources/forms-reports-and-other-resources/downloads/ra-march-31-white-paper-032416.pdf.*

[147] See, for example, Section 9.2.6 Phase 5—Health Status Validation of the 2021 Benefit Year PPACA HHS Risk Adjustment Data Validation (HHS–RADV) Protocols (November 9, 2022) available at *https://regtap.cms.gov/uploads/library/*

Continued

Although we have no evidence that enrollees with HCCs on the LLPC list are switching plans when their conditions are inactive, HHS agrees that the LLPC list may create the opportunity, in certain circumstances, for issuers to receive credit for HCCs when the enrollee did not receive care or require active treatment during the applicable enrollment-period. Thus, as outlined above and in the proposed rule, we believe that the LLPC list is no longer necessary to balance the burdens and costs of HHS–RADV with the program integrity goals of validating the actuarial risk of enrollees in risk adjustment covered plans.[148] Now that issuers have gained sufficient experience with the HHS–RADV Protocols and have consistently met data integrity criteria for their EDGE data submissions,[149] HHS will discontinue use of the LLPC list and the use of non-EDGE claims beginning with the 2022 benefit year of HHS–RADV. We will update the HHS–RADV Protocols applicable to the 2022 benefit year and beyond to capture these changes.

We also generally disagree with concerns of upcoding in the HHS-operated risk adjustment program. First, the vast majority of enrollees in risk adjustment covered plans do not have HCCs, and therefore, there are limited opportunities for upcoding to exist in the HHS-operated risk adjustment program. As of the 2021 benefit year, over 75 percent of enrollees of risk adjustment covered plans in the individual non-catastrophic risk pool did not have a single HCC.[150] In addition, over time, we have implemented risk adjustment model specifications to mitigate the potential for upcoding, such as the HCC coefficient estimation groups, which reduce risk score additivity within disease groups and limit the sensitivity of the risk adjustment models to upcoding, and the interacted HCC counts model specification, which is restricted to enrollees with at least one severe illness or transplant HCC, and thus, reduces concerns of issuers inflating overall HCC counts.[151] [152] Moreover, the HHS–RADV program serves as an additional safeguard for upcoding by auditing the issuer submitted data, and we have not seen conclusive evidence of upcoding on EDGE. Regardless, we will continue to monitor trends in the HHS-operated risk adjustment program and utilize HHS–RADV to validate the accuracy of data submitted by issuers for use in calculations under the State payment transfer formula in the HHS risk adjustment methodology.

Comment: A few commenters supported discontinuing the use of the LLPC list and the use of non-EDGE claims due to concerns related to the use of the supplemental file. One of these commenters asserted that a small number of issuers use the supplemental file for a disproportionate share of their plan liability risk scores and recommended prohibiting use of the LLPC list and non-EDGE claim documentation to validate supplemental diagnoses. This commenter urged HHS to limit the use of the supplemental file to a percent of plan liability risk score and asked HHS to reevaluate HCCs that are more prevalent in the supplemental file or are associated with lower-cost individuals when added through the supplemental file. This commenter also asked HHS to clarify that discontinuing the use of the LLPC list and non-EDGE claims would end the use of documentation for prior-year or non-EDGE encounters to support supplemental HCCs on EDGE. Another commenter supported the use of the supplemental file and asserted that the purpose of the supplemental diagnosis files is to facilitate accurate and complete coding.

Response: We agree with comments that support the use of supplemental file and generally clarify that issuers have never been allowed to use the LLPC list to support supplemental diagnosis codes in supplemental file submissions. The supplemental file allows issuers to submit supplemental diagnosis codes for the limited circumstances in which relevant diagnoses may be missed or omitted on a claim or during an encounter submission, or in which diagnoses requires deletion for a claim accepted to the issuer's EDGE server. Issuers are required to follow the EDGE Server Business Rules when submitting diagnoses through the supplemental file. Supplemental diagnosis codes must be supported by medical record documentation and comply with standard coding principles and guidelines, be linked to a previously submitted and accepted EDGE server medical claim, and be the result of medical service(s) that occurred during the data collection period for a given benefit year.[153] [154]

With these limitations in place, we do not believe that it is necessary or appropriate to limit supplemental file submissions to a percentage of plan liability risk score. Moreover, in

HRADV_2021_Benefit_Year_Protocols_5CR_110922.pdf.

[148] See § 153.20. Risk adjustment covered plan means, for the purpose of the risk adjustment program, any health insurance coverage offered in the individual or small group market with the exception of grandfathered health plans, group health insurance coverage described in § 146.145(b) of this subchapter, individual health insurance coverage described in § 148.220 of this subchapter, and any plan determined not to be a risk adjustment covered plan in the applicable federally certified risk adjustment methodology.

[149] As noted in the proposed rule (87 FR 78245), all States received an interim risk adjustment summary report from the 2017 benefit year through 2021 benefit year of the HHS-operated risk adjustment program. Since issuance of the proposed rule, we released the 2022 benefit year interim risk adjustment results. As noted in the 2022 benefit year interim risk adjustment report, five States were ineligible for inclusion on the basis of one or more credible issuers in those markets failing to meet the applicable thresholds for data quantity and/or quality evaluations by the applicable deadline. See the Interim Summary Report on Permanent Risk Adjustment for the 2022 Benefit Year (March 17, 2023), available at *https://www.cms.gov/cciio/programs-and-initiatives/premium-stabilization-programs/downloads/interim-ra-report-by2022.pdf.* However, across eligible States, we calculated a data completion rate of 91.7 percent in the 2022 benefit year interim risk adjustment report, which is an increase from the data completion rate of 90.8 percent in the 2021 benefit year interim risk adjustment report. Ibid. We therefore continue to believe issuers have had sufficient time to gain experience with EDGE data submissions, and HHS–RADV activities, such that it is appropriate to reconsider and move forward with discontinuing the LLPC list and non-EDGE claims policies beginning with the 2022 benefit year of HHS–RADV, as proposed.

[150] See Table 4: Percent of Enrollees with HCCs, 2017–21 of the Summary Report on Permanent Risk Adjustment Transfers for the 2021 Benefit Year (July 19, 2022) available at *https://www.cms.gov/CCIIO/Programs-and-Initiatives/Premium-Stabilization-Programs/Downloads/RA-Report-BY2021.pdf.*

[151] For example, diabetes diagnosis codes are organized in a Diabetes hierarchy, consisting of three CCs arranged in descending order of clinical severity and cost, from CC 19 Diabetes with Acute Complications to CC 20 Diabetes with Chronic Complications to CC 21 Diabetes without Complication. A person may have diagnosis codes in multiple CCs within the Diabetes hierarchy, but once hierarchies are imposed, that enrollee would only be assigned the single highest HCC in the hierarchy. To limit diagnostic upcoding by severity in the Diabetes hierarchy, we have constrained the three HCCs to have the same coefficient in risk adjustment. As such, issuers cannot get more credit towards their risk score by upcoding within the Diabetes hierarchy.

[152] As discussed in the 2021 RA White Paper, one of our considerations for proposing the interacted HCC count model specifications was our belief that by limiting the interacted HCC counts factors to certain severe illness and transplant HCCs, we would restrict the scope for coding proliferation and effectively mitigate the potential for gaming. Page 59–60 *https://www.cms.gov/files/document/2021-ra-technical-paper.pdf.*

[153] To see the complete list of processing rules for the supplemental file, see Section 8.4 General Supplemental Diagnosis Code File Processing Rules of the EDGE Server Business Rules (ESBR) Version 22.0 (November 2022) available at *https://regtap.cms.gov/reg_librarye.php?i=3765.*

[154] While supplemental file diagnosis codes may be linked to accepted EDGE server medical claims that are not risk adjustment eligible, only supplemental file diagnosis codes that are linked to risk adjustment-eligible claims accepted by the EDGE server will be used in risk adjustment and HHS–RADV.

response to comments, we analyzed enrollee condition categories by diagnosis source in the 2018, 2019 and 2020 HHS–RADV data, and we do not have concerns of HCCs that are more prevalent in the supplemental file or are associated with lower-cost individuals when added through the supplemental file. Our analysis found that issuers mostly use the supplemental file as a way to provide more evidence of a condition. We also did not propose and are not finalizing any changes to the framework applicable to the use or submission of supplemental files to issuers' EDGE servers.

Furthermore, supplemental file diagnoses cannot be linked to non-EDGE claims as these claims are not on EDGE. The discontinuation of the non-EDGE claims policy means issuers will no longer be able to submit claims that are not accepted onto EDGE to validate diagnoses for their IVA (or SVA, as applicable), and the discontinuation of the LLPC list means issuers will no longer be able to submit prior-year documentation for their IVA (or SVA, as applicable). Both of these changes will apply beginning with the 2022 benefit year of HHS–RADV. In addition, consistent with existing requirements, the medical record documentation submitted by the issuer for their IVA (or SVA, as applicable) must meet standard coding principles and guidelines for abstraction of the diagnosis, to support EDGE claims or supplemental diagnosis codes.[155]

Comment: Several commenters opposed discontinuing the use of the LLPC list and non-EDGE claims due to concerns that this would hinder issuers' ability to accurately capture health care costs and be appropriately compensated for enrollee risk. One commenter stated that the discontinuance of the LLPC list and non-EDGE claims will limit their ability to identify and coordinate the most appropriate care for enrollees with LLPC diagnoses. This commenter also noted that the use of non-EDGE claims improves the capture of diagnoses on the LLPC list and suggested that the removal of these policies contradicts the purpose of the ACA to ensure coverage of pre-exiting conditions. A few commenters stated that the LLPC list helps capture diagnoses that might otherwise only be reflected in pharmacy costs. One commenter stated that plans are already losing out on capturing many chronic conditions because the HHS-operated risk adjustment program does not allow a plan to code conditions based on medication. Another commenter suggested that conditions with high pharmacy costs that are not recognized by the RXC model, such as hemophilia, will only be captured by the specialist responsible for the condition and not by other provider types like primary care physicians. This commenter recommended studying which high-cost conditions on the LLPC list are not represented by the RXC model, but have high costs associated with them regardless of whether a diagnosis is billed directly during the course of a benefit year.

Response: We agree there are some benefits associated with the LLPC list and non-EDGE claims policy, that were developed in the early years of HHS–RADV. The list was designed to ease the burden of medical record retrieval for lifelong conditions by simplifying and standardizing coding abstraction for IVA and SVA entities as issuers were gaining experience with the HHS–RADV Protocols and addressing any lingering challenges submitting claims to their EDGE servers. It did not, however, supersede or replace the rules for submitting the diagnosis codes to EDGE servers that are used to determine enrollee risk. To capture enrollee risk, issuers must submit enrollee claims data and diagnosis codes to EDGE servers following the EDGE Server Business Rules and standard coding principles and guidelines.[156]

Similarly, the use of non-EDGE claims in HHS–RADV allowed issuers to submit medical records associated with non-EDGE claims to their IVA entity for HCC validation purposes in certain situations. This protocol was also designed to ease the burden as issuers were gaining experience with the HHS–RADV Protocols and addressing any lingering challenges submitting claims to their EDGE servers. As noted in the proposed rule, issuers consistently meet data integrity criteria for their EDGE data submissions.[157] Therefore, HHS does not believe that the discontinuance of the use of the LLPC list or non-EDGE claims in HHS–RADV will impact issuers' ability to accurately capture health care costs and enrollee risk. Further, HHS believes issuers have now gained sufficient experience with the HHS–RADV Protocols such that it is also no longer necessary to continue these policies beginning with the 2022 benefit year of HHS–RADV.

Discontinuing the use of the LLPC list and non-EDGE claims should also not impact providers' or issuers' ability to coordinate the most appropriate care for enrollees with LLPC diagnoses. If anything, enrollees with better-coordinated care should be more likely to have their diagnoses documented on a risk adjustment-eligible claim during the benefit year, which should then be captured in the issuer's EDGE data submission. Further, HHS does not believe the removal of the LLPC list will contradict the purpose of the ACA to ensure coverage of pre-existing conditions. Issuers should continue to follow standard coding principles and guidelines, which include guidelines regarding the treatment of chronic conditions, to capture diagnoses among enrollees with pre-existing conditions. We believe that updating the HHS–RADV Protocols to discontinue the use of the LLPC list and non-EDGE claims beginning with the 2022 benefit year of HHS–RADV aligns with the goals of the HHS-operated risk adjustment program and HHS–RADV, as issuers will have a stronger incentive to encourage enrollees to access care within the benefit year so the risk can be captured on a risk adjustment-eligible claim. These updates to the HHS–RADV Protocols will also address concerns raised by some interested parties that issuers could passively receive credit for an HCC when the enrollee did not receive care or require active treatment during the applicable benefit year.

We also do not agree that discontinuing the use of the LLPC list will prevent the capture of diagnoses that are being actively managed and are associated with pharmacy costs. If a patient with hemophilia or other chronic conditions is receiving care or active treatment, whether from a specialist or primary care provider, the diagnosis should be documented on a claim submitted to the issuer's EDGE server. Additionally, we anticipate the issuer would also be encouraging the patient with such chronic conditions to access care during the benefit year as part of its general wellness, prevention, or other health promotion activities.

We further note that our purpose for adding RXCs to the risk adjustment models was to impute missing diagnoses and to indicate severity of illness.[158] These prescription drug-based classes for the HHS risk adjustment adult models were developed using empirical evidence on frequencies and predictive power; clinical judgment on relatedness, specificity, and severity of RXCs; and

[155] 45 CFR 153.630(b)(7). See, for example, Section 9.2.6 Phase 5—Health Status Validation of the 2021 Benefit Year PPACA HHS Risk Adjustment Data Validation (HHS–RADV) Protocols (November 9, 2022) available at *https://regtap.cms.gov/uploads/library/HRADV_2021_Benefit_Year_Protocols_5CR_110922.pdf.*

[156] Ibid.

[157] 87 FR 78245. Also see supra note 14947.

[158] 81 FR 94074 through 94084

professional judgment on incentives and likely provider responses to the classification system.[159] We carefully considered the selection of high-cost drugs for inclusion to avoid overly reducing the incentives for issuers to strive for efficiency in prescription drug utilization and the selection of drugs in areas exhibiting a rapid rate of technological change, as a drug class that is associated with a specific, costly diagnosis in one year may no longer be commonly used for that condition the next. As a result, there is a limited number of prescription drug classes included in the HHS risk adjustment adult models, and the RXCs included are select drug classes (and in some cases, specific drugs) that are closely associated with particular diagnoses. The same medication may be prescribed for multiple conditions, and therefore, a condition cannot be substantiated based solely on medication. To receive credit for an HCC in HHS–RADV, the condition needs to be linked to a risk adjustment eligible claim that has been accepted by the EDGE server with appropriate medical record documentation supporting diagnosis or treatment regardless of whether that HCC is also represented by an RXC in the HHS risk adjustment adult models. We continuously monitor, assess and update the drugs for mapping to RXCs in the adult risk adjustment models, and we may further investigate drugs associated with high-cost chronic conditions that are not currently represented by the RXC model in the future.

Comment: Several commenters opposed discontinuing the use of the LLPC list and non-EDGE claims policy due to concerns of provider coding practices. Some of these commenters stated that LLPC diagnoses are taken into consideration by providers during medical decision making, and are sometimes treated, regardless of whether they separately appear on a claim. One commenter shared they have observed an ongoing issue where providers are not consistently capturing the care provided for conditions diagnosed in prior-year claims.

Other commenters noted that many LLPCs are captured in medical history or surgical history notes and may not be included in any notes on current treatment. One commenter asserted that issuers with narrow networks or limited out-of-network benefits have a great ability to influence provider coding practices and ensure all diagnoses are recorded on claims. One commenter urged HHS to consider regulatory differences across States, and noted that issuers in their State are required by State law to cover behavioral treatment for autism from some providers without a referral from a diagnosing provider.

Response: The LLPC list and the non-EDGE claims policies are part of the HHS–RADV Protocols and, as noted above, were adopted in the early years of HHS–RADV to streamline and simplify the process while issuers gained experience with HHS–RADV activities and EDGE data submissions. They do not, however, supplement or replace the data submission requirements or EDGE Server Business Rules that issuers must follow to submit claims to their EDGE servers, including the rules governing the necessary medical record documentation to support each condition, diagnosis or treatment on each claim. Consistent with § 153.710(a) through (c), EDGE Server Business Rules for the HHS-operated risk adjustment program that govern EDGE data submissions direct that EDGE server data submissions are claim-based and follow standard coding principles and guidelines.[160] EDGE Server Business Rules also require that diagnosis codes submitted on risk adjustment-eligible claims to the EDGE server be related to medical services performed during the patient's visit.[161]

It is the issuer's responsibility to submit complete and accurate data for each benefit year to their respective EDGE server by the applicable deadline.[162] Issuers are also responsible for helping their respective IVA entities retrieve provider medical records and documentation sufficient to support the conditions, diagnosis and treatment information submitted to the issuer's EDGE server for the applicable benefit year.[163] Issuers should work with their providers to ensure they are following correct coding guidelines to support acceptance of medical claims and diagnoses submitted to the issuer's EDGE server.[164] We have not seen evidence that issuers with narrow networks or limited out-of-network benefits have a greater ability to influence provider coding practices. Issuers in the individual and small group (including merged) markets are allowed to develop provider networks and out of network benefit designs in accordance with applicable State and Federal requirements. These types of plans and benefit designs are subject to the same rules and requirements of the HHS-operated risk adjustment program as all issuers, including but not limited to the processes to conduct the HHS–RADV audits. We also note that HCCs associated with behavioral diagnoses such as autism are not included on the LLPC list. Additionally, we clarify that HHS–RADV does consider and accommodate differences across States, such as with respect to provider credentialing requirements. For example, medical records submitted for HHS–RADV must be from an acceptable physician/practitioner specialty type licensed to diagnose in that State and must be authenticated by the provider.

We continue to consider ways to improve the HHS–RADV audit process to address State regulatory differences. In the past, we recognized concerns regarding limitations imposed under certain States' medical privacy laws that could limit providers' ability to furnish mental and behavioral health records for HHS–RADV purposes, and in response, we updated § 153.630(b)(6) to permit use of abbreviated mental or behavioral health assessments for HHS–RADV in situations where a provider is subject to State (or Federal) privacy laws that prohibit the provider from providing a complete mental or behavioral health record to HHS.[165] HHS appreciates regulatory differences across States being brought to our attention and will continue to consider these differences, such as those associated with behavioral diagnoses, when developing policies.

Issuers should also develop and communicate with providers the applicable policies and procedures that providers will need to follow to support the issuer's business needs, including the issuer's submission of data to their EDGE server and subsequent validation

[159] See, for example, 81 FR 94075 through 94076.

[160] See, for example, Table 49: 'Standard Code Sets and Sources' of the EDGE Server Business Rules (ESBR) Version 22.0 (November 2022) available at *https://regtap.cms.gov/uploads/library/DDC-ESBR-110122-5CR-110122.pdf,* which lists the standard code sets and sources the EDGE server uses to verify submitted codes during data submission.

[161] See, for example, Section 8.1 Guidance on Diagnosis Code(s) Derived from Health Assessments of the EDGE Server Business Rules (ESBR) (November 1, 2022) available at *https://regtap.cms.gov/uploads/library/DDC-ESBR-110122-5CR-110122.pdf.*

[162] See 45 CFR 153.610, 153.700, and 153.730.

[163] See 45 CFR 153.630(b)(6). Also see 45 CFR 153.620(a) and (b).

[164] See, for example, Table 49: 'Standard Code Sets and Sources' of the EDGE Server Business Rules (ESBR) Version 22.0 (November 2022) available at *https://regtap.cms.gov/uploads/library/DDC-ESBR-110122-5CR-110122.pdf,* which lists the standard code sets and sources the EDGE server uses to verify submitted codes during data submission.

[165] See the 2019 Payment Notice, 83 FR 16967 through 16969. Also see Section 9.2.6.7—Acceptable Medical Record Source of the 2021 Benefit Year PPACA HHS Risk Adjustment Data Validation (HHS–RADV) Protocols (November 9, 2022) available at *https://regtap.cms.gov/uploads/library/HRADV_2021_Benefit_Year_Protocols_5CR_110922.pdf.*

of such data in HHS–RADV. If an issuer is aware of incorrect or incomplete coding practices by a provider, the issuer should work to resolve the incorrect or incomplete coding practices with the provider and should not rely on the use of the LLPC list or non-EDGE claims to address provider coding concerns.

We are discontinuing the use of the LLPC list and the non-EDGE claims beginning with the 2022 benefit year. As such, beginning with the 2022 benefit year of HHS–RADV, issuers will no longer be able to submit non-EDGE claims to their IVA entities to supplement EDGE claims reviewed during HHS–RADV and the LLPC list will also no longer be available for use by the IVA (and SVA) entities in HHS–RADV. We will update the HHS–RADV Protocols applicable to the 2022 benefit year and beyond to capture these changes. In addition, we continue to encourage issuers to examine ways to encourage providers to follow coding guidelines and capture all relevant diagnoses on claims and notes related to current treatments.

Comment: Several commenters expressed concern that discontinuing the LLPC list and non-EDGE claims policy in HHS–RADV would increase issuer dependence on provider's medical document retrieval. Some of these commenters disagreed with HHS that issuers' ability to capture conditions is based on experience with HHS–RADV or EDGE data submissions, and instead asserted that accurately capturing conditions depends on documentation received from providers. One of these commenters shared that they request thousands of records every year that they never receive. A few commenters raised concerns of claims processing time impacting issuers' ability to submit diagnoses and claims information to their EDGE servers, as well as validate the data in HHS–RADV. One of these commenters stated that the inconsistent nature of chart retrieval necessitates the continuation of the non-EDGE claims policy to allow issuers to submit medical records associated with a risk adjustment-eligible claim that missed the deadline for EDGE submission. Another one of these commenters stated that a significant number of HCCs are contained on facility claims for services that are often furnished late in the year, which leaves issuers without enough time to include them in EDGE data submissions. Another one of these commenters noted that claims data on EDGE is often incomplete due to the nature of claims adjudication processes and the use of non-EDGE claims in HHS–RADV remedies this by allowing issuers to capture conditions in HHS–RADV that may have been missed in EDGE data submissions.

Response: After consideration of comments, HHS is discontinuing of the use of the LLPC list and non-EDGE claims in HHS–RADV beginning with 2022 benefit year HHS–RADV and generally encourages issuers to work with providers to improve processes for medical record retrieval. Once the LLPC list and non-EDGE claim policy are discontinued, to receive credit for an HCC in HHS–RADV, the condition will need to be linked to a risk adjustment eligible claim that is accepted by the EDGE server with the appropriate medical record documentation supporting the diagnosis or treatment on the claim. Issuers should develop and communicate with providers the policies and procedures they need to comply with to support the issuer's complete submission of data to their EDGE server and validation of that data in HHS–RADV. If issuers are aware of providers that are unresponsive to documentation requests, the issuer should work with those providers to resolve the concerns. To assist issuers in medical record retrieval, we created an HHS–RADV Provider Medical Record Request Memo on CMS letterhead, available via the HHS–RADV Audit Tool, that issuers can use when engaging with providers to obtain medical record documentation to support HHS–RADV.[166]

Additionally, HHS allows issuers until April 30th of the following applicable benefit year, or until the next applicable business day if April 30th does not fall on a business day, to submit all final claims, supplemental diagnosis codes, and enrollment data for the applicable benefit year of risk adjustment to their respective EDGE servers.[167] The purpose of establishing the EDGE data submission deadline several months after the close of the benefit year is to give issuers time to collect all necessary claims information, including facility claims, as we recognize there are often hospital stays that begin at the end of the year and cross into the next.[168]

In addition, we recognize that issuers may sometimes experience delays in the submission of claims by providers and facilities, as well as reprocess claims submitted to their EDGE servers after the applicable benefit year's data submission deadline. However, issuers are not permitted to submit additional data or correct data already submitted to their EDGE servers after the applicable benefit year's deadline and remain responsible for ensuring the completeness and accuracy of the data submitted to their EDGE servers by the applicable data submission deadline.[169] This deadline is applicable to all issuers of risk adjustment covered plans to create a level playing field and to create a clear deadline for when the previous benefit year needs to be closed out so transfers can be calculated. Given that HHS–RADV is an audit of data issuers submit to EDGE, claims that miss the deadline for EDGE submission should generally not be used to support HCC validation in HHS–RADV. As previously explained, the LLPC list and use of non-EDGE claims policies were adopted in the early years of HHS–RADV to help simplify and streamline the process as issuers gained experience with the HHS–RADV Protocols and addressed any lingering challenges with the EDGE data submission process. HHS believes it is now appropriate to end these policies as there is clear evidence that issuers are now sufficiently familiar with these operations. In fact, HHS rarely observes claims processing times preventing issuers from meeting applicable EDGE data submission deadlines, as all States were included in interim risk adjustment summary reports for the 2017 through 2021 benefit years.[170] This means that, from the 2017 through 2021 benefit years, all issuers of risk adjustment covered plans with 0.5 percent or more of market share submitted at least 90 percent of a full year of medical claims to their EDGE servers by the applicable deadline, as well as met data quality evaluation checks. HHS recognizes there can be challenges in the document retrieval process and continues to welcome feedback from stakeholders on ways HHS can further support issuers with document retrieval for HHS–RADV.

[166] See Section 9.2.6.2—Medical Record and Chart Retrieval of the 2021 Benefit Year PPACA HHS Risk Adjustment Data Validation (HHS–RADV) Protocols (November 9, 2022) available at *https://regtap.cms.gov/uploads/library/HRADV_2021_Benefit_Year_Protocols_5CR_110922.pdf.*

[167] See § 153.730.

[168] See, for example, the 2014 Payment Notice, 78 FR 15434 (explaining the EDGE data submission deadline " . . . provides for ample claims runout to ensure that diagnoses for the benefit year are captured, while providing HHS sufficient time to run enrollee risk score, plan average risk, and payments and charges calculations and meet the June 30 deadline described at the redesignated § 153.310(e) . . .")

[169] See, for example, the Evaluation of EDGE Data Submissions for 2022 Benefit Year EDGE Server Data Bulletin (October 25, 2022), available at *https://www.cms.gov/cciio/resources/regulations-and-guidance/downloads/edge_2022_qq_guidance.pdf.*

[170] See supra note 14947.

Comment: Several commenters recommended maintaining the LLPC list in HHS–RADV and extending it to also apply to EDGE data submissions. A few commenters raised concerns about conflicting rules between HHS–RADV Protocols and the standard coding principles and guidelines that issuers must follow to submit data to their EDGE servers. One of these commenters noted AHA Coding Clinic guidance disallowing abstraction of chronic conditions from past medical history and supported HHS alignment of the EDGE Server Business Rules and the HHS–RADV Protocols, including with respect to the treatment of chronic conditions found in the past medical history section of the medical record. Another commenter stated the need for greater clarity to ensure consistent coding guidelines across providers, issuers and IVA entities, and asserted that discontinuing the use of LLPC list would exacerbate inconsistent interpretations of standard coding guidelines across issuers and IVA entities. This commenter stated that Coding Clinic Guidance has increased confusion of the standard coding guidelines and urged HHS to intervene with the Coding Clinic process and to not relinquish authority to the Coding Clinic.[171] This commenter also noted that the LLPC list is widely appreciated by IVA entities that lack coding experience and knowledge.

Response: HHS is discontinuing the use of the LLPC list and non-EDGE claims in HHS–RADV beginning with the 2022 benefit year HHS–RADV. This change does not change coding guidance for the HHS-operated risk adjustment program or the EDGE Server Business Rules.[172] Issuers are still required to follow standard coding principles and guidelines when submitting data to EDGE.

As previously explained, HHS created the LLPC list in the early years of HHS–RADV to assist with coding abstraction for IVA and SVA entities as issuers gained experience with HHS–RADV and addressed any lingering EDGE data submission challenges, but the LLPC list was never a supplement to or replacement for the EDGE Server Business Rules. As such, we do not believe it is appropriate to extend the use of the LLPC list to EDGE data submissions. The HHS-operated risk adjustment program relies on EDGE server data to identify risk incurred by the issuer, measured using the issuer's claims from only the current benefit year. Extending the use of the LLPC list to EDGE data submissions could result in an issuer receiving credit for risk that they did not incur in the benefit year, and thereby create an EDGE server data integrity issue. Rather, we believe that issuers have now gained sufficient experience with HHS–RADV and EDGE data submission processes such that it is appropriate at this time, to promote consistency between the EDGE Server Business Rules and the HHS–RADV Protocols, to discontinue the use of the LLPC list beginning in the 2022 benefit year of HHS–RADV. The EDGE Server Business Rules require issuers to comply with standard coding principles and guidelines, which include any guidelines regarding the treatment of chronic conditions found in the past medical history section of the medical record.[173]

We affirm that, with the removal of the LLPC list, IVA entities will no longer be permitted to rely on the treatment of chronic conditions found in the past medical history section of the medical record to validate enrollee health status. This policy change, along with the discontinuation of the non-EDGE claims policy, will apply beginning with the 2022 benefit year of HHS–RADV. Consistent with the IVA requirements in § 153.630(b) and the applicable standards established by HHS, IVA entities will continue to be required to follow the ICD–10–CM and ICD–10 PCS classifications, Official Guidelines for Coding and Reporting and the American Hospital Association (AHA) Coding Clinic, along with professional judgment, to abstract diagnoses during health status validation.[174] Advice published in Coding Clinic does not replace the instruction in the ICD–10–CM and ICD–10–PCS classification or the Official Guidelines for Coding and Reporting. HHS cannot provide specific coding guidance for the purposes of HHS–RADV, and it is not our role to resolve disputes between coding clinic guidance.[175] [176] We believe that it is important for coding clinics to remain independent of HHS' influence to promote consistency and ensure diagnosis validation in accordance with industry standards. Although the SVA entity performs a second validation audit on a subsample of IVA Entity submission data to verify the IVA findings, issuers must ensure that their IVA Entities are reasonably capable of performing an IVA according to the requirements and standards established by HHS, which includes validating the risk score of each enrollee in the sample by validating medical records according to industry standards for coding and reporting.[177]

d. HHS–RADV Discrepancy and Administrative Appeals Process

In the HHS Notice of Benefit and Payment Parameters for 2024 proposed rule (87 FR 78206, 78245), we proposed to shorten the window under § 153.630(d)(2) for issuers to confirm the findings of the SVA (if applicable),[178] or file a discrepancy report, to within 15 calendar days of the notification by HHS, beginning with the 2022 benefit year of HHS–RADV. To effectuate this proposed amendment, we proposed the following four revisions to § 153.630(d): (1) remove the reference to the calculation of the risk score error rate as a result of HHS–RADV; (2) revise § 153.630(d)(2) to establish that the attestation and discrepancy reporting window for the SVA findings (if applicable) will be within 15 calendar days of the notification by HHS of the SVA findings (if applicable), rather than the current 30-calendar-day reporting window; (3) redesignate current paragraph (d)(3) as paragraph (d)(4); and (4) add a new § 153.630(d)(3) to

[171] See, for example, ICD–10–CM/PCS Coding Clinic, Second Quarter 2022, Page 30 to 31, Reporting Additional Diagnoses in Outpatient Setting.

[172] When abstracting a diagnosis, HHS–RADV interested parties should reference, in sequential order, the conventions in the ICD–10–CM and ICD10–PCS classification, ICD–10–CM Official Coding Guidelines for Coding and Reporting, the AHA Coding Clinic. See, for example, Section 9.2.6.3—Medical Record Review and Diagnosis Abstraction of the 2021 Benefit Year PPACA HHS Risk Adjustment Data Validation (HHS–RADV) Protocols (November 9, 2022) available at *https://regtap.cms.gov/uploads/library/HRADV_2021_Benefit_Year_Protocols_5CR_110922.pdf.*

[173] See, for example, Table 49: 'Standard Code Sets and Sources' of the EDGE Server Business Rules (ESBR) Version 22.0 (November 2022) available at *https://regtap.cms.gov/reg_librarye.php?i=3765,* which lists the standard code sets and sources the EDGE server uses to verify submitted codes during data submission.

[174] See § 153.630(b)(2). Also see, for example, section 9.2.6 Phase 5—Health Status Validation of the HHS of the 2021 Benefit Year PPACA HHS Risk Adjustment Data Validation (HHS–RADV) Protocols (November 9, 2022) available at *https://regtap.cms.gov/uploads/library/HRADV_2021_Benefit_Year_Protocols_5CR_110922.pdf.*

[175] On behalf of HHS, the Center for Consumer Information and Insurance Oversight (CCIIO), a component within CMS, performs functions related to the operation of the HHS–RADV program and promulgates standards governing the establishment by issuers of the EDGE server that is used for the HHS risk adjustment data collection process.

[176] See Section 9.2.6.11—Medical Record Abstraction of the HHS of the 2021 Benefit Year PPACA HHS Risk Adjustment Data Validation (HHS–RADV) Protocols (November 9, 2022) available at *https://regtap.cms.gov/uploads/library/HRADV_2021_Benefit_Year_Protocols_5CR_110922.pdf.*

[177] See § 153.630(b)(2) and (b)(7)(iv).

[178] Only those issuers who have insufficient pairwise agreement between the IVA and SVA receive SVA findings. See 84 FR 17495. Also see 86 FR 24201.

maintain the current attestation and discrepancy reporting window for the calculation of the risk score error rate, which provides that within 30 calendar days of the notification by HHS of the calculation of the risk score error rate, in the manner set forth by HHS, an issuer must either confirm or file a discrepancy report to dispute the calculation of the risk score error rate as a result of HHS–RADV. In addition, we proposed to make corresponding amendments to the cross-references to § 153.630(d)(2) that appear in §§ 153.710(h)(1) and 156.1220(a)(4)(ii), to add a reference to paragraph (d)(3). We sought comment on this proposal and the accompanying conforming amendments.

After reviewing the public comments, we are finalizing this provision as proposed. We summarize and respond to public comments received on the proposal and accompanying proposed amendments to shorten the window to 15 calendar days to confirm the SVA findings or file a discrepancy report, under § 153.630(d)(2), beginning with the 2022 benefit year HHS–RADV below.

Comment: Some commenters generally supported shortening the window to confirm the SVA findings or file a discrepancy report to dispute the SVA findings to within 15 calendar days of the notification by HHS beginning with the 2022 benefit year HHS–RADV. Other commenters stated that shortening the window would have a positive impact on reporting HHS–RADV adjustments for medical loss ratio (MLR) by supporting more timely reporting of these amounts. One commenter stated that, based on their experience, 15-calendar days provides sufficient time to respond to the SVA findings notification from HHS.

However, some commenters were opposed to the proposal to shorten the SVA attestation and discrepancy reporting timeframe from 30 to 15 days and instead recommended maintaining the existing 30-calendar day window. These commenters stated that they believed that the proposed 15-day timeline would not provide adequate time for issuers to complete a thorough review of the SVA findings. Another commenter suggested that the timeframes could be shortened elsewhere in the HHS–RADV process to keep the 30-day timeframe for the SVA attestation and discrepancy reporting process. This commenter also noted it would be helpful for issuers to receive their HHS–RADV error rates sooner for use in pricing.

A few commenters asserted that a 15-calendar day window would create internal challenges and operational burden in cases that require data extraction or information from clinical staff. One of these commenters noted that diverting the attention of Medical Directors to reviewing SVA findings would strain care and utilization management services, and thus, negatively impact members.

One commenter stated that shortening the window may cause issuers to appeal matters preemptively that would not have otherwise been appealed. This commenter also disagreed with HHS' rationale that the shortened window is appropriate because the SVA finding attestation and discrepancy reporting process is limited to the small number of issuers that have insufficient pairwise agreement between the IVA and SVA. The commenter indicated when an issuer receives SVA findings, an issuer's IVA results may raise material concerns that could impact other issuers in HHS–RADV, including the reporting of discrepancies due to insufficient pairwise agreement that have the potential of having substantial financial impacts and the issuer's risk score error rate calculation.

Response: After consideration of comments received, we are finalizing the proposal to shorten the SVA attestation and discrepancy reporting window from 30 to 15 calendar days as proposed. We are also finalizing the conforming amendments to §§ 153.630(d), 153.710(h)(1) and 156.1220(a)(4)(ii) to implement this change to the SVA attestation and discrepancy reporting window as proposed. We agree with commenters that this change will help to support timely reporting of the HHS–RADV adjustments to risk adjustment State payment transfers in issuers' MLR reports.

We also believe that shortening the attestation and discrepancy reporting window related to SVA results will improve HHS' ability to finalize SVA findings results prior to release of the applicable benefit year HHS–RADV Results Memo and the Summary Report of Risk Adjustment Data Validation Adjustments to Risk Adjustment Transfers for the applicable benefit year and prior to the MLR Reporting deadline. These reports are time-sensitive publications that cannot be developed until all SVA discrepancies are resolved and SVA findings are finalized. Our experience is also similar to the commenter who shared their perspective that a 15-day window is sufficient time to respond to the SVA findings notification from HHS. We further note that a 15-calendar-day SVA attestation and discrepancy reporting window is consistent with the IVA sample and EDGE attestation and discrepancy reporting windows at §§ 153.630(d)(1) and 153.710(d), respectively.

Although we appreciate the concerns expressed by some commenters, especially the potential internal challenges, operational burden, and potential downstream impacts on members, we believe the positive effects to reporting, combined with experience suggesting the 15-day window is feasible, provide sufficient countervailing support to shortening the window. HHS continues to believe that shortening the SVA window will benefit issuers by facilitating the issuance of more timely reports that can be used in pricing, including improving HHS' ability to finalize SVA findings results prior to release of the applicable benefit year HHS–RADV Results Memo and the Summary Report of Risk Adjustment Data Validation Adjustments to Risk Adjustment Transfers for the applicable benefit year.

We appreciate the request to shorten other timeframes in the HHS–RADV process to maintain the 30-day window for the SVA attestation and discrepancy reporting window, and while HHS continually considers process improvements to find more efficient ways to conduct HHS–RADV, we do not believe there are other areas we could shorten timelines for the processes at this time. These comments are also outside the scope of this rulemaking as we did not propose shortening any other HHS–RADV timelines in the proposed rule.

Additionally, as previously explained, the shortened window for the SVA attestation and discrepancy reporting window generally impacts a limited number of issuers. That is, our experience indicates that few issuers have insufficient pairwise agreement between the IVA and SVA such that they receive SVA findings; therefore, only few issuers would even have the option to file an SVA discrepancy. Of the issuers that receive SVA findings, our experience is that only a subset will actually file a discrepancy, and therefore, based on this experience, HHS believes only a very small number of issuers will be impacted by this change in future benefit years of HHS–RADV. Because a very small number of issuers will be impacted and the SVA discrepancy window will still be available for those issuers to raise material concerns, including those that could impact other issuers in HHS–RADV, the shortened SVA attestation and discrepancy reporting window mitigates concerns regarding financial

impacts and the issuer's risk score error rate calculation.

We also do not believe that shortening the SVA attestation and discrepancy reporting window may cause issuers to appeal matters preemptively. Issuers are bound by the requirements of § 156.1220, specifically paragraph (a)(4)(ii) which provides that notwithstanding § 156.1220(a)(1), a reconsideration with respect to a processing error by HHS, HHS's incorrect application of the relevant methodology, or HHS's mathematical error may be requested only if, to the extent the issue could have been previously identified, the issuer notified HHS of the dispute through the applicable process for reporting a discrepancy set forth in §§ 153.630(d)(2) and (3), 153.710(d)(2), and 156.430(h)(1), it was so identified and remains unresolved.

Finally, the shortened window also does not change the underlying burden for an issuer to attest or file a discrepancy of its SVA results as those tasks generally remain the same. Instead, this change only relates to the timeframe to complete these activities, but the existing overall burden hours to complete these tasks remains unchanged.[179] We recognize this change may have a short-term impact, such as diverting the attention of Medical Directors to reviewing SVA findings on a shorter timeline, but we expect the same staff and resources would generally be involved. Therefore, we do not expect this change will result in significant long-term downstream impacts to members. For all of the reasons outlined above, we believe the benefits of the shortened attestation and discrepancy reporting window for an issuer to attest to or file a discrepancy for its SVA findings under new § 153.630(d)(2) from 30 to 15 calendar days outweigh the reasons to maintain the 30-day window.

8. EDGE Discrepancy Materiality Threshold (§ 153.710)

We are finalizing, as proposed, the regulatory amendment from the HHS Notice of Benefit and Payment Parameters for 2024 proposed rule (87 FR 78206, 78247) to the EDGE discrepancy materiality threshold set forth at § 153.710(e) to align it with the final policy adopted in preamble in part 2 of the 2022 Payment Notice.[180] We are also finalizing, as proposed, the conforming amendment to § 153.710(h)(1) to add a reference to new § 153.630(d)(3).

As we explained in the proposed rule, the EDGE discrepancy materiality threshold final policy was intended to reflect that the amount in dispute must equal or exceed $100,000 or one percent of the total estimated transfer amount in the applicable State market risk pool, whichever is less. HHS generally only takes action on reported material EDGE discrepancies that harm other issuers in the same State market risk pool and, based on HHS' experience with prior benefit years, EDGE discrepancies that are less than a fraction of total State market risk pool transfers are unlikely to materially impact other issuers. We therefore proposed to amend § 153.710(e) to align with this final policy. We also proposed to amend § 153.710(h)(1) to add a reference to new proposed § 153.630(d)(3) to align with the changes discussed in section III.A.7.d. of this preamble (HHS–RADV Discrepancy and Administrative Appeals Process), to shorten the SVA attestation and discrepancy reporting period. We sought comment on the proposed amendments to § 153.710.

After reviewing the public comments, we are finalizing these amendments as proposed. The following is a summary of the comment we received and our response.

Comment: One commenter supported the proposal to update the EDGE discrepancy materiality threshold captured in § 153.710(e) to reflect that the amount in dispute must equal or exceed $100,000 or one percent of the total estimated transfer amount in the applicable State market risk pool, whichever is less. This commenter also asked that HHS consider applying the same threshold to reporting discrepancies because it would allow issuers to discontinue reporting minor discrepancies, which requires significant time and resources.

Response: We are finalizing the amendment to the EDGE discrepancy materiality threshold such that the amount in dispute must equal or exceed $100,000 or one percent of the total estimated transfer amount in the applicable State market risk pool, whichever is less, as proposed. We did not propose and are not finalizing a threshold for reporting EDGE discrepancies. Issuers must continue to report all discrepancies to HHS for HHS to determine whether they are material and actionable.[181]

We are also finalizing the conforming amendment to add a reference to the new § 153.630(d)(3) to the introductory text in § 153.710(h)(1). For a discussion of the comments related to the shortening of the SVA window to confirm, or file a discrepancy for SVA findings to 15 days, see the preamble discussion in section III.A.7.d. of this rule (HHS–RADV Discrepancy and Administrative Appeals Process).

B. Part 155—Exchange Establishment Standards and Other Related Standards Under the Affordable Care Act

1. Exchange Blueprint Approval Timelines (§ 155.106)

In the HHS Notice of Benefit and Payment Parameters for 2024 proposed rule (87 FR 78206, 78247), we proposed a change to address the Exchange Blueprint approval timelines for States transitioning from either a Federally-facilitated Exchange (FFE) to a State-based Exchange on the Federal Platform (SBE–FP) or to a State Exchange, or from an SBE–FP to a State Exchange. At § 155.106(a)(3) (for FFE or SBE–FP to State Exchange transitions) and (c)(3) (for FFE to SBE–FP transitions), we proposed to revise the current timelines by which a State must have an approved or conditionally approved Exchange Blueprint to require that States gain approval prior to the date on which the Exchange proposes to begin open enrollment either as an State Exchange or SBE–FP. The current regulatory timeline by which a State must have an approved or conditionally approved Exchange Blueprint was finalized in the 2017 Payment Notice (81 FR 12203, 12241 through 12242). Based on our experience with Exchange transitions since then, we stated in the proposed rule (87 FR 78206, 78247) that we believed the current timeline by which a State must gain Exchange Blueprint approval did not sufficiently support States' need to work with HHS to finalize and submit an approvable Exchange Blueprint.

Section 155.106 currently requires States to have an approved or conditionally approved Exchange Blueprint 14 months prior to an SBE–FP to State Exchange transition in accordance with paragraph (a)(3) and three months prior to a FFE to SBE–FP transition in accordance with paragraph (c)(3). The submission and approval of Exchange Blueprints is an iterative process that generally takes place over the course of 15 months prior to a State's first open enrollment with a

[179] For information on the associated burdens, see OMB Control Number 0938–1155 (CMS–10401—''Standards Related to Reinsurance, Risk Corridors, and Risk Adjustment).

[180] See 86 FR 24194 through 24195.

[181] See § 153.710(d)(2). Also see 83 FR 16970 through 16971. See also, for example, CMS. (2022, October 25). *Evaluation of EDGE Data Submissions for the 2022 Benefit Year. https://www.cms.gov/cciio/resources/regulations-and-guidance/downloads/edge_2022_qq_guidance.pdf.*

State Exchange, or 3 to 6 months prior to a State's first open enrollment with an SBE–FP. The Exchange Blueprint serves as a vehicle for a State to document its progress toward implementing its intended Exchange operational model. HHS' review and approval of the Exchange Blueprint involves providing substantial technical assistance to States as they design, finalize, and implement their Exchange operations. The transition from a FFE to a SBE–FP or State Exchange, or SBE–FP to State Exchange, involves significant collaboration between HHS and States to develop plans and document readiness for the State to transition from one Exchange operational model and information technology infrastructure to another. These activities include the State completing key milestones, meeting established deadlines, and implementing contingency measures.

Finalizing our proposal to require Exchange Blueprint approval or conditional approval prior to an Exchange's first open enrollment period will allow States the additional time and flexibility if needed, that, in our experience, is necessary to support the development and finalization of an approvable Exchange Blueprint, as well as for completion of the myriad of activities necessary to transition QHP enrollees in the State to a new Exchange model and operator. We are of the view that the more generous proposed timeline is appropriate and necessary to support a State's submission of an approvable Exchange Blueprint. The proposed timeline is more protective of the significant investments of personnel time and State tax dollars a State must make to stand up a new Exchange, by providing the State a timeline that reflects the realities of the time necessary to develop an approvable Exchange Blueprint that shows the Exchange will be ready to support the State's current and future QHP enrollees and applicants for QHP enrollment.

We sought comment on this proposal, including comments related to how transitioning State Exchanges could provide greater transparency to consumers regarding the Exchange Blueprint approval process.

After reviewing the public comments, we are finalizing this provision as proposed. We summarize and respond to public comments received on the proposed Exchange Blueprint approval timelines at § 155.106 below.

Comment: Multiple commenters supported the proposal that States receive approval on their Blueprint applications to operate a State Exchange or SBE–FP prior to their first open enrollment (rather than 14 months or 3 months before, as previously applicable), noting that the additional time for States to obtain approval of its Blueprint application will help States better implement State Exchange or SBE–FP requirements and prepare for State Exchange or SBE–FP operations.

Response: We agree that revising the current timelines by which a State must have an approved or conditionally approved Exchange Blueprint as proposed will permit States additional time to implement State Exchange or SBE–FP requirements.

Comment: One commenter suggested that States transitioning to State Exchanges could aim to provide greater transparency to consumers regarding the Blueprint approval process by adding information to their board meetings and making consumers aware of those meetings.

Response: We acknowledge this suggestion that States transitioning to State Exchanges should aim to provide greater transparency to consumers, however, this is outside the scope of this proposal.

Comment: A few commenters opposed the proposal, stating that without assurance of HHS' approval of the transition per current timelines, impacted interested parties in States transitioning to State Exchanges or SBE–FPs could face associated implementation risks. These commenters noted that issuers, as an example, require adequate time to implement operational changes necessary to accommodate a State transitioning to a State Exchange, such as changes to information technology systems, member communications, and marketing materials, with the goal of minimizing consumer confusion.

Response: We recognize the importance of interested parties, such as issuers and agents and brokers, in a State's transition to either a State Exchange or SBE–FP. The revision to the current timelines in § 155.106(a)(3) and (c)(3) does not circumvent the substantial technical assistance we provide to States as they design, finalize, and implement their Exchange operations. This involves significant collaboration between HHS and States to develop plans and document readiness for the State to transition from one Exchange operational model and information technology infrastructure to another. Moreover, as part of a State's transition, States are required to consult on an ongoing basis with interested parties, under § 155.130, to make them aware of transitioning activities and progress, with the goal of maximizing a seamless consumer experience. As such, we expect a State transitioning to a State Exchange or SBE–FP to coordinate well in advance with interested parties around its progress and the likelihood of implementing the applicable Exchange model operations for its intended first year of open enrollment.

2. Navigator, Non-Navigator Assistance Personnel, and Certified Application Counselor Program Standards (§§ 155.210, 155.215, and 155.225)

a. Repeal of Prohibitions on Door-to-Door and Other Direct Contacts

In the HHS Notice of Benefit and Payment Parameters for 2024 proposed rule (87 FR 78206, 78248), we proposed to repeal the provisions that currently prohibit Navigators, certified application counselors, non-Navigator assistance personnel in FFEs, and non-Navigator assistance personnel in certain State Exchanges funded with section 1311(a) Exchange Establishment grants (collectively, Assisters) from going door-to-door or using other unsolicited means of direct contact to provide enrollment assistance to consumers. This proposal will eliminate barriers to coverage access by maximizing pathways to enrollment.

Section 1311(d)(4)(K) and 1311(i) of the ACA direct all Exchanges to establish a Navigator program. Navigator duties and requirements for all Exchanges are set forth in section 1311(i) of the ACA and § 155.210. Section 1321(a)(1) of the ACA directs the Secretary to issue regulations that set standards for meeting the requirements of title I of the ACA, for, among other things, the establishment and operation of Exchanges. Under section 1321(a)(1) of the ACA, the Secretary issued § 155.205(d) and (e), which authorizes Exchanges to perform certain consumer service functions in addition to the Navigator program, such as the establishment of a non-Navigator assistance personnel program. Section 155.215 establishes standards for non-Navigator assistance personnel in FFEs and in State Exchanges if they are funded with section 1311(a) Exchange Establishment grant funds.[182] Section 155.225 establishes the certified application counselor program as a consumer assistance function of the Exchange, separate from and in addition to the functions described in §§ 155.205(d) and (e), 155.210, and 155.215.

Assisters are certified and trusted community partners who provide free and impartial enrollment assistance to consumers. They conduct outreach and

[182] At this time, no State Exchanges are funded with section 1311(a) Exchange Establishment grant funds.

education to raise awareness about the Exchanges and other coverage options. Their mission focuses on assisting the uninsured and other underserved communities to prepare applications, establish eligibility and enroll in coverage through the Exchanges, among many other things. The regulations governing these Assisters prohibit them from soliciting any consumer for application or enrollment assistance by going door-to-door or through other unsolicited means of direct contact, including calling a consumer to provide application or enrollment assistance without the consumer initiating the contact, unless the individual has a pre-existing relationship with the individual Assister or designated organization and other applicable State and Federal laws are otherwise complied with. We have interpreted this prohibition in the 2015 Market Standards final rule (79 FR 30240, 30284 through 30285) as still permitting door-to-door and other unsolicited contacts to conduct general consumer education or outreach, including to let the community know that the Assister's organization is available to provide application and enrollment assistance services to the public.

The existing regulations prohibiting Navigators (at § 155.210(d)(8)), non-Navigator assistance personnel (through the cross-reference to § 155.210(d) in § 155.215(a)(2)(i)), and certified application counselors (at § 155.225(g)(5)) were initially finalized in the 2015 Market Standards final rule (79 FR 30240). At the time that HHS proposed and finalized the 2015 Market Standards rule in 2014, the Exchanges were just beginning to establish operations. At the time, we believed that prohibiting door-to-door solicitation and other unsolicited means of direct consumer contact by an Assister for application or enrollment assistance would ensure that Assisters' practices were sufficiently protective of the privacy and security interests of the consumers they served. We also believed that prohibiting unsolicited means of direct contacts initiated by Assisters was necessary to provide important guidance and peace of mind to consumers, especially when they were faced with questions or concerns about what to expect in their interactions with individuals offering Exchange assistance.[183]

However, under existing regulations, Navigators and other non-Navigator assistance personnel in FFE States are permitted to conduct outreach to consumers using consumer information provided to them by an FFE. The Health Insurance Exchanges (HIX) System of Records Notice,[184] Routine Use No. 1 provides that the FFEs may share consumer information with HHS grantees, including Navigators and other non-Navigator assistance personnel in FFE States, who have been engaged by HHS to assist in an FFE authorized function, which includes conducting outreach to persons who have been redetermined ineligible for Medicaid/CHIP. In this limited circumstance, an FFE may share with Navigators and other non-Navigator assistance personnel in FFE States consumer information that the FFE receives from Medicaid/CHIP agencies once a consumer has been redetermined ineligible for Medicaid/CHIP for the Navigators and other non-Navigator assistance personnel to conduct outreach to such consumers regarding opportunities for coverage through the FFEs.

Since finalizing the 2015 Market Standards final rule, we have enacted a number of measures designed to ensure that Assisters are properly safeguarding the personally identifiable information of all consumers they assist. As part of their annual certification training, we require Assisters to complete a course on privacy, security, and fraud prevention standards. Further, we require Assisters to obtain a consumer's consent before discussing or accessing their personal information (except in the limited circumstance described above) and to only create, collect, disclose, access, maintain, store and/or use consumer personally identifiable information to perform the functions that they are authorized to perform as Assisters in accordance with §§ 155.210(b)(2)(iv) and (c)(1)(v), 155.225(d)(3), and 155.215(b)(2), as applicable. In addition, now that the Exchanges and their Assister programs have been in operation for almost 10 years, Assisters have more name recognition and consumer trust within the communities the Assisters serve. Accordingly, we believe that our previous concerns related to consumers' privacy and security interests and consumers not knowing what to expect when interacting with Assisters have been sufficiently mitigated with the measures we have enacted such that a blanket prohibition on unsolicited direct contact of consumers by Assisters for application or enrollment assistance is no longer necessary.

The prohibition on door-to-door enrollment assistance places additional burden on consumers and Assisters to make subsequent appointments to facilitate enrollment, which creates access barriers for consumers to receive timely and relevant enrollment assistance. Additionally, this prohibition could impede the Exchanges' potential to reach a broader consumer base in a timely manner, reduce uninsured rates, and increase access to health care. We believe it is important to be able to increase access to coverage for those whose ability to travel is impeded due to mobility, sensory or other disabilities, who are immunocompromised, and who are limited by a lack of transportation.

Consistent with the proposal to remove the general prohibition on door-to-door and other direct outreach by Navigators, we proposed to delete § 155.210(d)(8). The repeal of § 155.210(d)(8) will remove the general prohibition on door-to-door and other direct outreach by non-Navigator assistance personnel in FFEs and in State Exchanges if funded with section 1311(a) Exchange Establishment grants, as § 155.215(a)(2)(i) requires such entities to comply with the prohibitions on Navigator conduct set forth at § 155.210(d). Likewise, we proposed to repeal § 155.225(g)(5), which currently imposes the general prohibition against door-to-door and other direct contacts on certified application counselors.

As we explained in the proposed rule (87 FR 78249), we are now of the view that repealing restrictions on an Exchange's ability to allow Navigators, non-Navigator assistance personnel, and certified application counselors to offer application or enrollment assistance by going door-to-door or through other unsolicited means of direct contact is a positive step that will enable Assisters to reach a broader consumer base in a timely manner—helping to reduce uninsured rates and health disparities by removing underlying barriers to accessing health coverage.

We sought comment on this proposal.

After reviewing the public comments, we are finalizing this provision as proposed. We summarize and respond to public comments received on the proposed repeal of the provisions that prevent Assisters from going on door-to-door or using other unsolicited means of direct contact to provide enrollment assistance to consumers below.

Comment: The vast majority commenters supported this proposal, stating that it will help reduce uninsured rates and health disparities; improve health literacy in rural and underserved communities; and reduce burden on consumers, especially those experiencing social determinants of health that negatively affect health care

[183] 79 FR 30240.

[184] 78 FR 63211, 63215.

access and quality (for example, lack of transportation) or have inflexible job schedules; and immunocompromised individuals. Commenters also frequently noted that Navigators provide a key role in Medicaid and CHIP enrollments and have trusted relationships in the community. Health Centers commented that they appreciated the increased flexibility to go out into the community and reach patients who need the most support. Lastly, commenters stated that the proposal was particularly important to maintaining health insurance enrollments in light of Medicaid unwinding.

Response: We agree that that door-to-door consumer education, outreach, and enrollment can be a useful and effective method for addressing the concerns raised by commenters. We appreciate the overwhelming support for this proposal and agree that it will help Assisters continue to build trusted relationships in the community, which may result in an overall reduction in uninsured rates and reduce health disparities.

Comment: Several commenters recommended reinstating previous requirements to have two Navigator organizations in each State, with one being a local trusted non-profit that maintains a principal place of business within their Exchange service area.

Response: We agree that having two Navigator organizations in each State to provide face-to-face assistance could further help consumer assistance personnel understand and meet the specific needs of the communities they serve, foster trust between consumer assistance personnel and community members, and encourage participation in the Assister programs by individuals whose backgrounds and experiences reflect those of the communities they serve. However, we maintain that the two per State requirement may be too restrictive for Assister organizations already successfully providing remote assistance. In many circumstances, remote assistance may be more effective or practical than face-to-face assistance, particularly when an Assister is providing services to difficult-to-reach individuals or populations. Additionally, during the COVID PHE, usage of alternate methods of interactions with consumers, such as through telecommunication and digital health care tools, became more widespread. We believe that reaching as many consumers as possible is important as we approach Medicaid unwinding and strive to continually increase health insurance program enrollments. We train and entrust Assisters to help in the manner requested by the consumer, when possible.

Comment: Some commenters had mixed reactions to the proposal, supporting the intent but expressing concerns about protecting consumers against fraud. Some commenters specifically recommended that we withdraw or rewrite this section to protect consumers more adequately from fraud, by requiring Assisters going door-to-door to provide identification, records of enrollment transactions, and clear instructions on how to cancel any completed enrollments, as well as additional training to ensure Assisters obtain the consent of the household member in charge of financial matters.

Response: We appreciate the commenters' concerns and agree with them about protecting consumers against fraud. We have taken various measures to protect consumers against fraud. For example, we have recently updated the privacy and security requirements included in all Assister organizations agreements in consultation with the CMS security and privacy subject matter experts. We will continue to work on improving these requirements to ensure we are in alignment with current best practices to safeguard consumer privacy and security information.

We believe that current requirements adequately require Assisters to obtain informed consent from consumers. Assisters who complete an enrollment transaction must obtain a consent form from the consumer before collecting PII to carry out authorized Assister functions. In the *Standard Operating Procedures Manual for Assisters in the Individual Federally-facilitated Marketplaces Consumer Protections: Privacy and Security Guidelines* [185] we also encourage Assisters to ensure consumers take possession of their enrollment documents during in-person appointments (though Assisters can provide postage materials and/or mail a paper application on a consumer's behalf as long as the consumer consents to the Assister's retaining the application for this purpose). Assisters can add a specific consent to the Navigator's or certified application counselor's model authorization form so that consumers can consent to having their application mailed on their behalf.

We also have ways for a consumer to verify the legitimacy of Assisters such as requesting Assisters furnish a certificate of training completion from HHS that contains their name and unique Assister ID number, or simply requesting their name and Assister ID number, which consumers can verify by calling the Marketplace Call Center.

Lastly, we appreciate the constructive feedback on additional measures we may take to protect consumers from fraud and will take these into consideration in future rulemaking, training, and policy guidance.

Comment: Some commenters opposing the proposal expressed concerns about privacy and unwanted solicitations, and suggested that allowing door-to-door enrollments would compromise Assister impartiality and create confusion and misunderstanding among consumers. Commenters also opined that Assisters do not have the ability to project income for consumers with multiple sources of income. Commenters also suggested we have argued in the past that educating the public in conjunction with marketing creates confusion. Lastly, commenters stated that there is a prohibition against door-to-door enrollment by FFE agents and brokers which should be applied equally to Assisters.

Response: We appreciate the commenters' feedback but we have taken great strides to ensure the privacy and security of consumers' information through a variety of mechanisms. This includes requiring Assisters to obtain consumer consent to access their PII to carry out authorized Assister functions via an authorization form which must be maintained by the Assister organization for six years. Assisters also provide the FFE Privacy Policy to consumers they are assisting with enrollment, which explains how their PII will be used and safeguarded. This is also publicly available at *HealthCare.gov/privacy/*. Additionally, Assisters undergo certification training that includes modules on Privacy, Security, and Fraud Prevention Strategies, and Assister organizations must have policies and procedures for the collection, use, protection, and securing of PII. We also note that certification training includes modules that help to build trust from consumers by providing best practices for serving vulnerable and underserved populations, working with consumers with disabilities, providing language access, and doing all these things in a culturally sensitive manner.

We consider Assisters to be able to assist consumers with multiple streams of income. Assisters are required to know and understand the Exchange-related components of the PTC reconciliation process and understand

[185] *https://marketplace.cms.gov/technical-assistance-resources/sop-privacy-security-guidelines.pdf.*

the availability of IRS resources on this process. They also are required to provide referrals to licensed tax advisers, tax preparers, or other resources for assistance with tax preparation and tax advice related to the Exchange application and enrollment process and PTC reconciliations.

Lastly, there is no current Federal prohibition on door-to-door enrollments by agents and brokers in the FFEs and this comment is inaccurate based on current regulations for agents and brokers.

3. Ability of States To Permit Agents and Brokers and Web-Brokers To Assist Qualified Individuals, Qualified Employers, or Qualified Employees Enrolling in QHPs (§ 155.220)

Section 1312(e) of the ACA directs the Secretary to establish procedures under which a State may permit agents and brokers to enroll individuals and employers in QHPs through an Exchange and to assist individuals in applying for financial assistance for QHPs sold through an Exchange. In addition, section 1313(a)(5)(A) of the ACA directs the Secretary to provide for the efficient and non-discriminatory administration of Exchange activities and to implement any measure or procedure the Secretary determines is appropriate to reduce fraud and abuse. Under § 155.220, we established procedures to support the State's ability to permit agents, brokers, and web-brokers to assist individuals, employers, or employees with enrollment in QHPs offered through an Exchange, subject to applicable Federal and State requirements. This includes processes under § 155.220(g) and (h) for HHS to suspend or terminate an agent's, broker's, or web-broker's Exchange agreement(s) in circumstances that involve fraud or abusive conduct or where there are sufficiently severe findings of non-compliance. We also established FFE standards of conduct under § 155.220(j) for agents and brokers that assist consumers in enrolling in coverage through the FFEs to protect consumers and ensure the proper administration of the FFEs. Consistent with § 155.220(l), agents, brokers and web-brokers that assist with or facilitate enrollment in States with SBE–FPs must comply with all applicable FFE standards, including the requirements in § 155.220. In the HHS Notice of Benefit and Payment Parameters for 2024 proposed rule (87 FR 78206, 78249), we proposed to build on this foundation with new proposed procedures and additional consumer protection standards for agents, brokers, and web-brokers that assist consumers with enrollments through FFEs and SBE–FPs.

a. Extension of Time To Review Suspension Rebuttal Evidence and Termination Reconsideration Requests (§ 155.220(g) and (h))

In the HHS Notice of Benefit and Payment Parameters for 2024 proposed rule (87 FR 78206, 78249), we proposed to allow HHS up to an additional 15 or 30 calendar days to review evidence submitted by agents, brokers, or web-brokers to rebut allegations that led to the suspension of their Exchange agreement(s) or to request reconsideration of termination of their Exchange agreement(s), respectively. We are finalizing this proposal as proposed, which will provide HHS a total of up to 45 or 60 calendar days to review such rebuttal evidence or reconsideration request and notify the submitting agents, brokers, or web-brokers of HHS' determination regarding the suspension of their Exchange agreement(s) or reconsideration decision related to the termination of their Exchange agreement(s), respectively.

In the 2017 Payment Notice, we added paragraph (g)(5) to § 155.220 to address the temporary suspension or immediate termination of an agent's or broker's agreements with the FFEs in cases involving fraud or abusive conduct.[186] Consistent with section 1313(a)(5)(A) of the ACA, we added these procedures to give HHS authority to act quickly in these situations to prevent further harm to consumers and to support the efficient and effective administration of Exchanges on the Federal platform. Under § 155.220(g)(5)(i)(A), if HHS reasonably suspects that an agent, broker, or web-broker may have engaged in fraud or abusive conduct using personally identifiable information of Exchange applicants or enrollees or in connection with an Exchange enrollment or application, HHS may temporarily suspend the agent's, broker's or web-broker's Exchange agreement(s) for up to 90 calendar days, with the suspension effective as of the date of the notice to the agent, broker, or web-broker. This temporary suspension is effective immediately and prohibits the agent, broker, or web-broker from assisting with or facilitating enrollment in coverage in a manner that constitutes enrollment through the Exchanges on the Federal platform, including utilizing the Classic Direct Enrollment (Classic DE) and Enhanced Direct Enrollment (EDE) Pathways, during this 90-day period.[187] [188] As previously explained, immediate suspension is critical in these circumstances to stop additional potentially fraudulent enrollments through the FFEs and SBE–FPs.[189] Consistent with § 155.220(g)(5)(i)(B), the agent, broker, or web-broker can submit evidence to HHS to rebut the allegations that they have engaged in fraud or abusive conduct that led to a temporary suspension by HHS of their Exchange agreement(s) at any time during 90-day period. If such rebuttal evidence is submitted, HHS will review it and make a determination as to whether a suspension should be lifted within 30 days of receipt of such evidence.[190] If HHS determines that the agent, broker, or web-broker satisfactorily addresses the concerns at issue, HHS will lift the temporary suspension and notify the agent, broker, or web-broker. If the rebuttal evidence does not persuade HHS to lift the suspension, HHS may terminate the agent's, broker's, or web-broker's Exchange agreement(s) for cause.[191] [192]

We also previously established a framework for termination of an agent's, broker's, or web-broker's Exchange agreement(s) for cause in situations where, in HHS' determination, a specific finding of noncompliance or pattern of noncompliance is sufficiently severe.[193] This framework provides HHS the ability to terminate an agent's, broker's, or web-broker's Exchange agreement(s) for cause to protect consumers and the efficient and effective operation of Exchanges on the Federal platform in cases of sufficiently severe violations or patterns of violations. In these situations, HHS provides the agent, broker, or web-broker, an advance 30-day notice and an opportunity to cure and address the noncompliance finding(s).[194] [195] More

[186] See 81 FR 12258 through 12264. Also see 80 FR 75525 through 75526.

[187] 45 CFR 155.220(g)(5)(iii).

[188] The agent, broker, or web-broker must continue to protect any personally identifiable information accessed during the term of their Exchange agreement(s). See, for example, 45 CFR 155.220(g)(5)(iii) and 155.260.

[189] See, for example, 81 FR 12258 through 12264.

[190] See 45 CFR 155.220(g)(5)(i)(B).

[191] See 45 CFR 155.220(g)(5)(i)(B).

[192] If the agent, broker, or web-broker fails to submit rebuttal information during this 90-day period, HHS may terminate their Exchange agreement(s) for cause. 45 CFR 155.220(g)(5)(i)(B).

[193] See 45 CFR 155.220(g)(1) through (4). Also see, for example, 78 FR 37047 through 37048 and 78 FR 54076 through 54081.

[194] See 45 CFR 155.220(g)(3)(i).

[195] The one exception is for situations where the agent, broker, or web-broker fails to maintain the appropriate license under applicable State law(s). See 45 CFR 155.220(g)(3)(ii). In these limited situations, HHS may immediately terminate the agent, broker, or web-broker's Exchange agreement(s) for cause without any further

specifically, upon identification of a sufficiently severe violation, HHS notifies the agent, broker, or web-broker of the specific finding(s) of noncompliance or pattern of noncompliance. The agent, broker, or web-broker then has a period of 30 days from the date of the notice to correct the noncompliance to HHS' satisfaction. If after 30 days the noncompliance is not addressed to HHS' satisfaction, HHS may terminate the Exchange agreement(s) for cause. Once their Exchange agreement(s) are terminated for cause under § 155.220(g)(3), the agent, broker, or web-broker is no longer registered with the FFE, is not permitted to assist with or facilitate enrollment of a qualified individual, qualified employer, or qualified employee in coverage in a manner that constitutes enrollment through the Exchanges on the Federal platform, and is not permitted to assist individuals in applying for APTC and CSRs for QHPs.[196] [197] Consistent with § 155.220(h)(1), an agent, broker, or web-broker whose Exchange agreement(s) are terminated can request reconsideration of such action. Section 155.220(h)(2) provides the agent, broker, or web-broker with 30 calendar days to submit their request (including any rebuttal evidence or information) and § 155.220(h)(3) requires HHS to provide agents, brokers, or web-brokers with written notice of HHS' reconsideration decision within 30 calendar days of receipt of the request for reconsideration.

Our experience reviewing evidence and other information submitted by agents, brokers, or web-brokers to rebut allegations that led to the suspension of their Exchange agreement(s) or to request reconsideration of the termination of their Exchange agreement(s), found that the process, especially in more complex situations, often requires significant resources and time. The review process can involve parsing complex technical information and data, as well as revisiting consumer complaints or conducting outreach to consumers. The amount of time it takes for the review process is largely dependent on the particular situation at hand (for example, the number of alleged violations and impacted consumers, how much and what type of information an agent, broker, or web-broker submits, the amount of time it takes for consumers to locate and provide documentation related to their complaints, and the number of concurrent submissions in need of review). Given the large number of factors involved, we noted in the proposed rule (87 FR 78250) that we believe allowing HHS additional time to complete the review would be beneficial.

We noted in the proposed rule (87 FR 78250) that we were cognizant this additional time could delay the ability of agents, brokers, and web-brokers to conduct business, which may be particularly burdensome to those who have compelling evidence to rebut allegations of noncompliance. Given the critical role that agents, brokers, and web-brokers serve in enrolling consumers in plans on the Exchanges on the Federal platform, we noted that it is our intention to minimize the burden imposed on agents, brokers, and web-brokers to the greatest extent possible while also ensuring that HHS has additional time (if necessary) to review any submitted rebuttal evidence. As stated previously, this additional time is warranted to accommodate particularly complex situations that require significant resources and time. We noted that we expect not all reviews are so complex that they will require the use of this additional time; in cases where agents, brokers, and web-brokers present compelling evidence to rebut allegations of noncompliance, we expect to be able to resolve the vast majority of those reviews without the use of this additional time.

We also noted that we believe the proposal to allow HHS a total of up to 45 calendar days to review rebuttal evidence is warranted given that agents, brokers, and web-brokers have up to 90 days to submit rebuttal evidence to HHS during their suspension period, while HHS currently only has 30 days to review, consider, and make determinations based on that evidence. It does not seem unreasonable to increase this combined maximum 120-day time period [198] to 135 days.[199]

We noted that we believe this is not an unreasonable maximum timeframe, particularly where HHS has a reasonable suspicion the agent, broker, or web-broker engaged in fraud or abusive conduct that may cause imminent or ongoing consumer harm using personally identifiable information of an Exchange enrollee or applicant or in connection with an Exchange enrollment or application. As noted in the 2017 Payment Notice, there is a similar requirement for Medicare providers, as 42 CFR 405.371 provides HHS with the authority to suspend payment for at least 180 days if there is reliable information that an overpayment exists, or there is a credible allegation of fraud (81 FR 12262 through 12263). Under § 155.220(g)(5)(i)(A), HHS temporarily suspends an agent, broker or web-broker's Exchange agreement(s) only in situations in which there is sufficient evidence or other information such that HHS reasonably suspects the agent, broker or web-broker engaged in fraud or in abusive conduct that may cause imminent or ongoing consumer harm using personally identifiable information of an Exchange enrollee or applicant or in connection with an Exchange enrollment or application on the Federal platform. As such, HHS exercises this authority and sends suspension notices only in the limited situations where there may have been fraud or abusive conduct to stop further Exchange enrollment activity on the Federal platform when the misconduct may cause imminent or ongoing harm to consumers or the effective and efficient administration of Exchanges. We also further emphasized that the proposed extension to allow for up to 45 days for HHS to review rebuttal evidence in these situations represents the maximum timeframe.[200] To the extent the situation at hand does not, for example, involve a large number of alleged violations or impacted consumers, HHS may not need the maximum timeframe to complete the review and notify the agent, broker, or web-broker whether the suspension is lifted.

Terminations of Exchange agreement(s) by HHS are also limited,

opportunity to resolve the matter upon providing notice to the agent, broker, or web-broker. Ibid.

[196] 45 CFR 155.220(g)(4).

[197] The agent, broker, or web-broker must continue to protect any PII accessed during the term of their Exchange agreements. See, for example, 45 CFR 155.220(g)(4) and 155.260.

[198] As noted above, an agent, broker, or web-broker whose Exchange agreement(s) are temporarily suspended can submit rebuttal evidence at any time during the 90-day suspension period, thus triggering the start of the HHS review period and limiting the length of the suspension period. For example, if an agent were to submit rebuttal evidence within seven days of receiving the suspension notice and HHS were to respond on the last day of the new review period (day 45), as finalized in this rule, and lift the suspension, that would mean the agent's Exchange agreement(s) would have been suspended for only 52 days.

[199] For example, if an agent whose Exchange agreement(s) were temporarily suspended were to submit rebuttal evidence to rebut allegations that led to the suspension of their Exchange agreement(s) on the final day of the suspension period (day 90), pursuant to § 155.220(g)(5)(i)(B), and HHS were to respond on the final day of the new review period (day 45), as finalized in this rule, and lift the suspension, that agent's Exchange agreement(s) would be suspended for a maximum of 135 days.

[200] Further, as detailed above, the agent, broker, or web-broker whose Exchange agreement(s) are suspended has an opportunity to limit the overall length of the suspension period with the timely submission of rebuttal evidence.

but in a different way. As outlined above, § 155.220(g)(1) allows HHS to terminate an agent, broker, or web-brokers Exchange agreement for cause only when, in HHS' determination, a specific finding of noncompliance or pattern of noncompliance is sufficiently severe. Examples of specific findings of noncompliance that HHS might determine to be sufficiently severe to warrant termination of an agent's, broker's, or web-broker's Exchange agreement for cause under § 155.220(g)(1) include, but are not limited to, violations of the Exchange privacy and security standards.[201] Patterns of noncompliance that HHS might determine to be sufficiently severe to warrant termination for cause include, for example, repeated violations of any of the applicable standards in § 155.220 or § 155.260(b) for which the agent or broker was previously found to be noncompliant.[202] As noted in the proposed rule (87 FR 78206, 78251), if HHS takes the total up to 60 calendar days to review rebuttal evidence submitted by the agent, broker, or web-broker whose Exchange agreement was terminated for cause, the maximum timeframe for the reconsideration process under § 155.220(h) would be 90 days. We noted that we believe this approach strikes the appropriate balance with respect to reviewing information submitted with a request to reconsider termination of their Exchange agreement(s) because it provides the agent, broker, or web-broker due process while also protecting consumers from potential harm. We proposed a longer time period of 60 days for HHS review of information and evidence submitted by an agent, broker, or web-broker as part of their reconsideration request (versus 45 days for HHS review of rebuttal evidence and information submitted in response to a suspension determination) because the HHS reviews under § 155.220(h)(2) are part of the appeal process. As such, the agent, broker, or web-broker had an opportunity at an earlier stage of the suspension or termination process to rebut the allegations and/or findings, or otherwise take remedial steps to address the concerns identified by HHS, that led to suspension or termination of their Exchange agreement(s).[203] [204]

For these reasons, we proposed to amend § 155.220(g)(5)(i)(B) to provide HHS with up to 45 calendar days to review evidence and other information submitted by agents, brokers, or web-brokers to rebut allegations that led to suspension of their Exchange agreement(s) and make a determination of whether to lift the suspension. We also proposed to amend § 155.220(h)(3) to provide HHS with up to 60 days to review evidence and other information submitted by agents, brokers, or web-brokers to rebut allegations that led to termination of their Exchange agreement(s) and provide written notice of HHS' reconsideration decision.

We sought comment on this proposal.

After reviewing the public comments, we are finalizing this proposal to allow HHS up to an additional 15 or 30 calendar days to review evidence submitted by agents, brokers, or web-brokers to rebut allegations that led to suspension of their Exchange agreement(s) or to request reconsideration of termination of their Exchange agreement(s), respectively, as proposed. We summarize and respond to public comments received on the proposed extension of time to review suspension rebuttal evidence and termination reconsideration requests (''extended review windows'') below.

Comment: Multiple commenters expressed their support of these extended review windows. These commenters noted they believe the extended review windows are necessary to allow for proper review of complex cases. However, some of these commenters encouraged HHS to attempt to resolve suspension and termination reviews as quickly as possible and to not use the extra review time if it is not needed.

Response: We appreciate these comments and are finalizing the amendments to § 155.220(g)(5)(i)(B) and (h)(3) as proposed. As previously noted, we expect that not all reviews are so complex that they will require the use of this additional time, and that in cases where agents, brokers, and web-brokers present compelling evidence to rebut allegations of noncompliance, we believe that we will be able to resolve the vast majority of those reviews without the use of this additional time. We will continue to strive to resolve all suspension and termination reviews expeditiously and will not utilize the maximum review windows allowed unless necessary.

Comment: One commenter expressed concern that the extended review windows are too lengthy, especially during Open Enrollment.

Response: We disagree that these extended review windows are too lengthy, even during Open Enrollment. While we have acknowledged that this additional time could delay the ability of agents, brokers, and web-brokers to conduct business, particularly during Open Enrollment, we believe extending the review windows will be beneficial when dealing with complex cases that involve review of extensive evidence submitted by the agent or broker, revisiting multiple consumer complaints, and conducting additional outreach. Additionally, as previously stated, we believe that these extended review windows will only impact a very small percentage of agents, brokers, and web-brokers. This is because prior to suspending or terminating an agent or broker's Exchange agreement(s), HHS has already conducted a thorough investigation and concluded that the agent, broker, or web-broker in question is likely involved in fraudulent or noncompliant behavior. Furthermore, these extended review windows represent the maximum suspension or termination period possible. Therefore, we believe this approach strikes the appropriate balance because it maintains the agent's, broker's, or web-broker's ability to submit additional information for reconsideration after a suspension or termination while also protecting consumers from potential harm, including during Open Enrollment, and supporting the efficient and effective administration of the Exchanges on the Federal platform.

b. Providing Correct Information to the FFEs (§ 155.220(j))

In the HHS Notice of Benefit and Payment Parameters for 2024 proposed rule (87 FR 78206, 78251), we proposed amendments to § 155.220(j)(2)(ii) to require agents, brokers, or web-brokers assisting with and facilitating enrollment in coverage through FFEs and SBE–FPs or assisting an individual with applying for APTC and CSRs for QHPs to document that eligibility application information has been reviewed by and confirmed to be accurate by the consumer or their

[201] As outlined in § 155.220(g)(2), an agent, broker, or web-broker may be determined noncompliant if HHS finds that the agent, broker, or web-broker violated any standard specified in § 155.220; any term or condition of their Exchange agreement(s); any State law applicable to agents, brokers, or web-brokers; or any Federal law applicable to agents, brokers, or web-brokers.

[202] Ibid.

[203] See 45 CFR 155.220(g)(5)(i)(B) (providing an opportunity to rebut allegations of fraud or abusive conduct) and 45 CFR 155.220(g)(3)(i) (providing advance notice and an opportunity to correct the noncompliance).

[204] The one exception is for immediate terminations for cause due to the lack of appropriate State licensure under 45 CFR 155.220(g)(3)(ii). In these situations, however, the maximum timeframe between the agent, broker, or web-broker receiving the termination notice and the issuance of the HHS reconsideration decision would be 90 days.

authorized representative designated in compliance with § 155.227, prior to application submission. We proposed that such documentation would be created by the assisting agent, broker, or web-broker and would require the consumer or their authorized representative to take an action, such as providing a signature or a recorded verbal confirmation, that produces a record that can be maintained by the agent, broker, or web-broker and produced to confirm the submitted eligibility application information was reviewed and confirmed to be accurate by the consumer or their authorized representative. In addition, we proposed that the documentation would be required to include the date the information was reviewed, the name of the consumer or their authorized representative, an explanation of the attestations at the end of the eligibility application, and the name of the agent, broker, or web-broker providing assistance. Lastly, we proposed that the documentation would be required to be maintained by the agent, broker, or web-broker for a minimum of 10 years and produced upon request in response to monitoring, audit, and enforcement activities conducted consistent with § 155.220(c)(5), (g), (h) and (k). As noted in the proposed rule, these proposed changes would require amending § 155.220(j)(2)(ii), creating new § 155.220(j)(2)(ii)(A), and redesignating current § 155.220(j)(2)(ii)(A) through (D) without change as § 155.220(j)(2)(ii)(B) through (E), respectively.

Agents, brokers, and web-brokers are among those who play a critical role in educating consumers about Exchanges and insurance affordability programs, and in helping consumers complete and submit applications for eligibility determinations, compare plans, and enroll in coverage. Consistent with section 1312(e) of the ACA, § 155.220 establishes the minimum standards for the process by which an agent, broker, or web-broker may help enroll an individual in a QHP in a manner that constitutes enrollment through the Exchanges on the Federal platform and to assist individuals in applying for APTC and CSRs. This process and minimum standards require the applicant's completion of an eligibility verification and enrollment application and the agent's, broker's, or web-broker's submission of the eligibility application information through the Exchange website or an Exchange-approved web service.[205] While agents, brokers, and web-brokers can assist a consumer with completing the Exchange application, the consumer is the individual with the knowledge to confirm the accuracy of the information provided on the application.[206]

Section 155.220(j)(2) sets forth the standards of conduct for agents, brokers, or web-brokers that assist with or facilitate enrollment of qualified individuals, qualified employers, or qualified employees in coverage in a manner that constitutes enrollment through an FFE or SBE–FP or that assist individuals in applying for APTC and CSRs for QHPs sold through an FFE or SBE–FP. As explained in the 2017 Payment Notice proposed rule (81 FR 12258 through 12264), these standards are designed to protect against agent, broker, and web-broker conduct that is harmful towards consumers or prevents the efficient operation of the FFEs and SBE–FPs. Under § 155.220(j)(2)(ii), agents, brokers, or web-brokers must provide the FFEs and SBE–FPs with ''correct information under section 1411(b) of the Affordable Care Act.''

Section 1411(h) of the ACA provides for the imposition of civil penalties if any person fails to provide correct information under section 1411(b) to the Exchange. Consistent with § 155.220(l), agents, brokers and web-brokers that assist with or facilitate enrollment of qualified individuals, qualified employers, or qualified employees in States with SBE–FPs must comply with all applicable FFE standards. This includes, but is not limited to, compliance with the FFE standards of conduct in § 155.220(j).

Currently, § 155.220(j)(2)(ii) requires that agents, brokers, and web-brokers provide the FFEs and SBE–FPs with correct information under section 1411(b) of the ACA, but it does not explicitly require agents, brokers, or web-brokers assisting consumers with completing eligibility applications through the FFEs and SBE–FPs to confirm with those consumers the accuracy of the information entered on their applications prior to application submission or document the consumer has reviewed and confirmed the information to be accurate. We noted in the proposed rule (87 FR 78252) that HHS has continued to observe applications submitted to the FFEs and SBE–FPs that contain incorrect consumer information. We have also received consumer complaints stating the information provided on their eligibility applications submitted by agents, brokers, or web-brokers on their behalf was incorrect. These complaints can be difficult to investigate and adjudicate, because the only evidence available is often the word of one person against another and the FFEs and SBE–FPs generally do not have access to other contextual information to help resolve the matter. By requiring the creation and maintenance of documentation that the assisting agent, broker, or web-broker confirmed with the consumer or their authorized representative that the entered information was reviewed and accurate, the adjudication of such complaints could be expedited and more easily resolved. In addition, the inclusion of incorrect consumer information on eligibility applications may result in consumers receiving inaccurate eligibility determinations, and may affect consumers' tax liability, or produce other potentially negative results. If a consumer receives an incorrect APTC determination or is unaware they are enrolled in a QHP, that consumer may owe money to the IRS when they file their Federal income tax return. Ensuring a consumer's income determination has been reviewed and is accurate will help avoid these situations. Incorrect consumer information on eligibility applications may also affect Exchange operations or HHS's analysis of Exchange trends. For example, a high volume of applications all containing erroneous information, such as U.S. citizens attesting to not having a Social Security number (SSN), could hinder the efficient and effective operation of the Exchanges on the Federal platform by requiring HHS to focus its time and efforts on addressing these erroneous applications. We noted that this proposal is consistent with the fact that the consumer or their authorized representative is the individual with the knowledge to confirm the accuracy of the information provided on the application and will serve as an additional safeguard and procedural step to ensure the accuracy of the application information submitted to Exchanges on the Federal platform. Thus, we proposed to revise § 155.220(j)(2)(ii) to require agents, brokers, and web-brokers to document that the eligibility application information was reviewed and confirmed to be accurate by the consumer or their authorized representative before application submission.

We also proposed to establish in new proposed § 155.220(j)(2)(ii)(A) standards for what constitutes adequate documentation that eligibility

[205] 45 CFR 155.220(c)(1). Also see, for example, 77 FR 18334 through 18336.

[206] This is evidenced by the language in § 155.220(j)(1) that refers to agents, brokers, or web-brokers that *assist* or *facilitate* enrollment (emphasis added).

application information has been reviewed and confirmed to be accurate by the consumer or their authorized representative. First, we proposed to revise § 155.220(j)(2)(ii)(A) to establish that documenting that eligibility application information has been reviewed and confirmed to be accurate by the consumer or their authorized representative would require the consumer or their authorized representative to take an action that produces a record that can be maintained and produced by the agent, broker, or web-broker and produced to confirm the consumer or their authorized representative has reviewed and confirmed the accuracy of the eligibility application information.

We did not propose any specific method for documenting that eligibility application information has been reviewed and confirmed to be accurate by the consumer or their authorized representative. To provide guidance to agents, brokers, and web-brokers, we proposed to include in § 155.220(j)(2)(ii)(A) a non-exhaustive list of acceptable methods to document that eligibility application information has been reviewed and confirmed to be accurate, including obtaining the signature of the consumer or their authorized representative (electronically or otherwise), verbal confirmation by the consumer or their authorized representative that is captured in an audio recording, or a written response (electronic or otherwise) from the consumer or their authorized representative to a communication sent by the agent, broker, or web-broker, or other similar means or methods that we specify in guidance. We also invited comment on whether there may be other acceptable methods of documentation that we should consider specifying to be permissible for purposes of documenting that eligibility application information has been reviewed and confirmed to be accurate by the consumer or their authorized representative. For example, we noted that we were specifically interested in any current best practices or approaches that agents, brokers or web-brokers may use to create records or otherwise document that eligibility application information was reviewed by the consumer or their authorized representative prior to submission to the Exchanges on the Federal platform.

We also proposed that the consumer would be able to review and confirm the accuracy of application information on behalf of other applicants (for example, dependents or other household members), and authorized representatives would be able to provide review and confirm the accuracy of application information on behalf of the people they are designated to represent, as it may be difficult or impossible to obtain confirmation from each consumer whose information is included on an application. This would allow agents, brokers, and web-brokers to continue assisting consumers as they currently do (for example, often by working with an individual representing a household when submitting an application for a family).

Next, we proposed to require at new proposed § 155.220(j)(2)(ii)(A)(*1*) that the eligibility application information documentation, which would be created by the assisting agent, broker, or web-broker, would be required to include an explanation of the attestations at the end of the eligibility application that the eligibility application information has been reviewed by and confirmed to be accurate by the consumer or their authorized representative. At the end of the Exchange eligibility application, one of the attestations the consumer must currently agree to before submitting the application is as follows: ''I'm signing this application under penalty of perjury, which means I've provided true answers to all of the questions to the best of my knowledge. I know I may be subject to penalties under Federal law if I intentionally provide false information.'' The documentation the agent, broker, or web-broker creates to satisfy this proposed requirement would be required to include this language for awareness and to remind the consumer that they are responsible for the accuracy of the application information, even if the information was entered into the application on their behalf by an agent, broker, or web-broker assisting them. We noted that we believe this proposal would help ensure that the consumer or their authorized representative understands the importance of confirming the accuracy of the information contained in the eligibility application and further safeguard against the provision and submission of incorrect eligibility application information. We also noted that we believe the proposal would help safeguard consumers from the negative consequences of failing to understand the attestations and potentially attesting to conflicting information. For example, one common error we see on applications completed by agents, brokers, or web-brokers is an attestation that a consumer does not have an SSN while also including an attestation that the consumer is a U.S. citizen. These conflicting attestations can generate DMIs, which, if not resolved during the allotted resolution window, could result in the consumer's coverage being terminated. For these reasons, we proposed to add a requirement at new § 155.220(j)(2)(ii)(A)(*1*) that the documentation include the date the information was reviewed, the name of the consumer or their authorized representative, an explanation of the attestations at the end of the eligibility application, and the name of the assisting agent, broker, or web-broker.

Lastly, at new proposed § 155.220(j)(2)(ii)(A)(*2*), we proposed to require agents, brokers, and web-brokers to maintain the documentation demonstrating that the eligibility application information was reviewed and confirmed as accurate by the consumer or their authorized representative for a minimum of 10 years. Section 155.220(c)(5) states HHS or our designee may periodically monitor and audit an agent, broker, or web-broker to assess their compliance with applicable requirements. However, there is not currently a maintenance of records requirement directly applicable to all agents, brokers, and web-brokers assisting consumers through the FFEs and SBE–FPs.[207] Capturing a broad-based requirement mandating that all agents, brokers, and web-brokers assisting consumers in the FFEs and SBE–FPs maintain the records and documentation demonstrating that information captured in their application has been reviewed and confirmed to be accurate by the consumer or their authorized representative they are assisting would provide a clear, uniform standard. It also would ensure this documentation is maintained for sufficient time to allow for monitoring, audit, and enforcement activities to take place.[208] Therefore,

[207] Section 155.220(c)(3)(i)(E) requires web-brokers to maintain audit trails and records in an electronic format for a minimum of 10 years and cooperate with any audit under this section. Section 156.340(a)(2) places responsibility on QHP issuers participating in Exchanges using the Federal platform to ensure their downstream and delegated entities (including agents and brokers) are complying with certain requirements, including the maintenance of records requirements in § 156.705. In addition, under § 156.340(b), agents and brokers that are downstream entities of QHP issuers in the FFEs must be bound by their agreements with the QHP issuer to comply with certain requirements, including the records maintenance standards in § 156.705. Section 156.705(c) and (d) requires QHP issuers in the FFEs to maintain certain records for 10 years and to make all such records available to HHS, the OIG, the Comptroller General, or their designees, upon request.

[208] While investigations consumer complaints are an example of a more immediate, real-time monitoring and oversight activity, market conduct examinations, audits, and other types of investigations (for example, compliance reviews) may occur several years after the applicable coverage year.

consistent with other Exchange maintenance of records requirements,[209] we proposed to capture in new proposed § 155.220(j)(2)(iii)(A)(*2*) that agents, brokers, and web-brokers would be required to maintain the documentation described in proposed § 155.220(j)(2)(ii)(A) for a minimum of 10 years, and produce the documentation upon request in response to monitoring, audit, and enforcement activities conducted consistent with § 155.220(c)(5), (g), (h), and (k).

We sought comment on these proposals.

After reviewing the public comments, we are finalizing these proposals as proposed. We are making an edit to new § 155.220(j)(2)(ii) to add a missing comma before the reference to section 1411(b) of the ACA. This is a nonsubstantive edit that does not impact or otherwise change the new requirements or policies related to the obligation for agents, brokers and web-brokers to provide the FFEs and SBE–FPs with correct information under § 155.220(j)(2)(ii) that are being finalized in this rule, as proposed.

We summarize and respond to public comments received on the proposals to require agents, brokers, and web-brokers to document that eligibility application information has been reviewed by and confirmed to be accurate by the consumer or their authorized representative prior to application submission and the associated document retention policy below.

Comment: Many commenters supported these proposals, stating they would protect consumers by helping prevent incorrect APTC determinations, and as a result, consumers potentially owing additional money to the IRS when they file their Federal income tax returns. Other commenters stated that these proposals would help encourage compliance and aid investigations of misconduct by agents, brokers, and web-brokers.

Response: We agree with these commenters and appreciate their support of these proposals. We are finalizing these proposals as proposed.

Comment: Numerous commenters expressed concerns the proposals would impose heavy burdens on agents, brokers, and web-brokers due to the additional time that would be required for agents, brokers, and web-brokers to implement and come into compliance with these new requirements. Some of these commenters stated the additional time required to meet these new requirements would be more burdensome during the Open Enrollment Period. Other commenters stated that they believed the additional time associated with implementing and complying with these new requirements would discourage consumers from enrolling in coverage through the FFEs and SBE–FPs, as well as agents, brokers, and web-brokers from assisting consumers in the FFEs and SBE–FPs.

Response: We recognize these new requirements will likely require agents, brokers, and web-brokers to spend more time with each consumer to ensure and document that eligibility application information has been reviewed by and confirmed to be accurate by the consumer or their authorized representative prior to application submission and that this may affect agents, brokers, and web-brokers more so during the Open Enrollment Period. However, we believe the benefits of the new requirements outweigh any potential negative impact on agents, brokers, web-brokers, or consumers. It is imperative that consumers' Exchange applications contain accurate information when determining eligibility. As discussed in the proposed rule (87 FR 78252), if consumers' income determinations are not accurate, they could face serious financial harm when reconciling their taxes. In addition, submission of incorrect information on an application may lead to a DMI. Some DMIs, if left unresolved, can lead to a termination of a consumer's Exchange coverage. Ensuring consumers, or their authorized representatives, have reviewed their application information and attested to its accuracy will help mitigate these issues. Further, these new requirements will support the efficient operation of the FFEs and SBE–FPs by helping reduce the number of applications with incorrect information, limiting the number of DMIs that need to be investigated, and expediting our ability to investigate and resolve disputes related to inaccurate consumer information being entered on an eligibility application, which will also benefit agents, brokers, web-brokers and consumers.

In addition, as discussed in the proposed rule (87 FR 78252 through 78253), we did not propose to specify a method for documenting that eligibility application information has been reviewed and confirmed to be accurate by the consumer or their authorized representative to provide agents, brokers, or web-brokers the flexibility to establish protocols and methods that will meet their needs in the most efficient manner.

Given this flexibility, and that the fact that these new requirements are simply building on existing requirements,[210] we do not believe that they will discourage many agents, brokers, or web-brokers from assisting consumers in the FFEs and SBE–FPs or that Exchange enrollment will drop by a significant percentage, if at all. In fact, we believe that these new requirements, which are intended to protect consumers, prevent fraud and abusive conduct, and ensure the efficient and effective operation of the Exchanges on the Federal platform, will encourage more consumers to purchase health insurance through the Exchanges. We will, however, monitor Exchange enrollment data and agent, broker, and web-broker participation in future years to analyze if these new requirements have a noticeable negative impact.

Comment: Some commenters suggested these new requirements would add a disproportionate burden on smaller agencies and independent agents, brokers, and web-brokers, particularly with regard to the initial costs of implementing these new requirements. These commenters stated larger agencies are better equipped to implement these new requirements and absorb the costs associated with them.

Response: We acknowledge that larger agencies may be better equipped to implement these new requirements. There will be upfront costs associated with implementing these new requirements, including potentially purchasing recording software, upgrading storage capacity, or hiring new personnel. Larger agencies typically have more resources to allocate towards meeting new industry standards, as is the case in other business fields as well. However, we do not believe these new requirements will be cost prohibitive to smaller agencies or independent agents, brokers, and web-brokers. As discussed above, we are not mandating the method by which agents, brokers, and web-brokers must meet these new requirements. Therefore, smaller agencies and independent agents, brokers, and web-brokers have the flexibility to meet these requirements utilizing the most efficient and cost-effective method that meets their business needs. Additionally, as mentioned previously, these new requirements are simply building on existing requirements,[211] which we believe will alleviate the burdens and costs associated with these new

[209] See, for example, 45 CFR 155.220(c)(3)(i)(E) and 156.705(c).

[210] See § 155.220(j)(2)(ii).

[211] See § 155.220(j)(2)(ii).

requirements for agents, brokers, and web-brokers of all sizes.

Comment: Multiple commenters stated they believed these new requirements would be more difficult to implement over the phone, which would negatively impact consumers without internet access (that is, lower income) or those who are less proficient with technology.

Response: We disagree that these requirements will be more difficult to implement over the phone than with respect to other enrollment methods. As is the case today, consumers will be able to enroll in QHPs and apply for APTC and CSRs for such coverage over the phone, in-person, and via the internet. The flexibility to choose what method is utilized to document that eligibility application information has been reviewed and confirmed to be accurate by the consumer or their authorized representative will allow agents, brokers, and web-brokers to implement these new requirements in a manner that is least burdensome to them. Agents, brokers, and web-brokers may also use this flexibility to implement different methods to comply with these requirements depending on the circumstances of each consumer they are assisting. Different implementation methods include, but are not limited to, obtaining the signature of the consumer or their authorized representative (electronic or otherwise), verbal confirmation by the consumer or their authorized representative that is captured in an audio recording, where legally permissible, or a written response (electronic or otherwise) from the consumer or their authorized representative to a communication sent by the agent, broker, or web-broker.

As such, to implement these new requirements for over-the-phone enrollments, where legally permissible and in accordance with applicable requirements,[212] agents, brokers, and web-brokers can record phone conversations with consumers or their authorized representatives to comply with § 155.220(j)(2)(ii)(A). For example, during these conversations, an agent, broker, or web-broker may ask the consumer if they have reviewed their application information, the information is accurate, and they understand the attestations involved. A recording of the consumer's response to these questions, if it meets the requirements in § 155.220(j)(2)(ii)(A), would be sufficient to meet these new requirements. We understand that saving recorded conversations may be more difficult than other mediums due to the digital space requirements and recording software needed, but is not an excessive burden as there are numerous recording software options to choose from and external hard drives are widely available for purchase. Where legally permissible, it will be the choice of the agent, broker, or web-broker if recording phone conversations is the best method for them to implement these requirements for over-the-phone enrollments. At the same time, we recognize there may be reasons agents, brokers and web-brokers would also want to have other methods available for over-the-phone enrollments. For example, in situations where a phone recording is not possible, agents, brokers and web-brokers may send the consumer or their authorized representative an email or text message after talking with them over the phone. The consumer or their authorized representative may respond to this email or text message, acknowledging they have reviewed the eligibility application information and confirmed its accuracy prior to application submission. When in-person assistance is provided, the agent, broker or web-broker may want to offer the recording methods and other options that it uses for over-the-phone enrollments. The agent, broker, or web-broker may also want to implement a method for in-person assistance that involves obtaining the signature of the consumer or authorized representative (electronic or otherwise) given the face-to-face nature of the interaction. Similarly, agents, brokers and web-brokers should consider what methods meets their business needs, and those of their consumers, for enrollments over the internet. While we are not mandating that agents, brokers, and web-brokers adopt all of these different implementation methods, we encourage agents, brokers and web-brokers to exercise this flexibility in a manner that accommodates the various enrollment methods they use with their respective consumers. Additionally, if an agent, broker, or web-broker is not able to accommodate a consumer (for example, the consumer does not have access to the internet or is less proficient with technology but the specific agent, broker, or web-broker only engages in enrollments via the internet), the consumer may find another agent, broker, or web-broker that can meet their needs.

We believe these new requirements will help protect consumers, including those who may be in underserved groups, rather than inhibit their enrollment in Exchange coverage, as well as ensure the efficient and effective operation of the Exchanges on the Federal platform. Further, we frequently see unauthorized enrollments impact underserved groups of consumers in greater numbers than other groups. Often, agents, brokers, and web-brokers who engage in noncompliant or fraudulent behavior target low-income consumers or consumers with limited English proficiency. By requiring that agents, brokers, and web-brokers document that consumers or their authorized representatives have reviewed and verified their application information prior to submission, we believe that these consumer harms and the impact on underserved groups can be mitigated.

Comment: Multiple commenters expressed concerns regarding the disclosure of consumers' personally identifiable information (PII). These commenters stated that they believe these new requirements would lead to more improper disclosures of consumer PII as agents, brokers, and web-brokers would be storing more consumer PII than in the past.

Response: We do not believe these new requirements will lead to more improper disclosures of consumer PII. These new requirements do not require agents, brokers, and web-brokers to record or maintain any consumer PII in addition to the consumer PII an agent, broker, or web-broker currently records and maintains. The new requirements include ensuring a consumer or their authorized representative has reviewed and attested that their application information is correct prior to submission and that this is documented and maintained by the agent, broker, or web-broker for a minimum of 10 years. This documentation must include the date the information was reviewed, the name of the consumer or their authorized representative, an explanation of the attestations at the end of the eligibility application, and the name of the assisting agent, broker, or web-broker. The only piece of PII required for this documentation is the consumer's name, which an agent, broker, or web-broker would already be recording and maintaining in their files.

A recorded conversation, during an over-the-phone enrollment or otherwise, could potentially contain more consumer PII than what the regulations require, as additional consumer

[212] We recognize that there are Federal and State laws that govern the legality of recording phone calls and conversations that may impact an agent, broker, or web-broker's ability to record phone or oral communications with consumers or that may require an agent, broker, or web-broker to obtain the consumer's consent prior to recording such communications (see, for example, 18 U.S.C. 2511).

information may be revealed during the conversation and the enrollment process. However, we do not believe this will lead to more improper disclosures of consumer PII. Agents, brokers, and web-brokers are already required to adhere to applicable State or Federal laws concerning the safeguarding of consumer PII, including § 155.220(g)(4) and (j)(2)(iv), and HIPAA.[213] These same requirements and protections continue to apply. Additionally, an agent, broker, or web-broker that elects to implement the phone recording method to meet these new requirements would only be required to record the portion of the conversation in which the consumer or consumer's representative confirms that they have reviewed and attested that their application information is correct prior to submission to demonstrate compliance, which would reduce the amount of consumer PII in the recorded conversation. This would further reduce or eliminate the potential of improper disclosures of consumer PII.

Comment: One commenter suggested the IRS provide the consumer income information that is to be entered on each Exchange application.

Response: We appreciate the commenter's suggestion, but generally note the consumer is in the best position to project their future income and is the individual generally responsible for providing application information, including information regarding income.[214] To determine if a consumer is eligible for financial assistance, such as APTC, prior to enrollment, an estimate for income must be entered prior to the eligibility determination process. As many consumers enroll in health coverage prior to a new calendar year, the income amount they enter is an estimate based on available data, including income in prior years, as well as what consumers believe their income will be in the upcoming plan year. The IRS will not have income data for the consumer for the year of coverage until the consumer files a tax return for the year of coverage. This typically does not occur until the next calendar year. By that time, the year of coverage will have ended so this income data from the IRS will not provide a timely income projection for the upcoming year of coverage. Recognizing income amounts provided by consumers on eligibility applications are projections, the statute generally requires HHS to verify income information on Exchange applications with the Department of Treasury.[215] As such, the ACA established an approach that collects information about estimated income for the upcoming plan year from the consumer, the person in the best position to make such projections, with a verification of that information from a trusted source, the Department of Treasury and IRS.

Comment: Several commenters stated that we should allow agents, brokers, and web-brokers to meet these new requirements under § 155.220(j)(2)(ii) and the new requirements related to documenting consumer consent under § 155.220(j)(2)(iii) during the same consumer interaction and/or within the same document.

Response: Agents, brokers, and web-brokers are not prohibited from documenting that eligibility application information has been reviewed by and confirmed to be accurate by the consumer or the consumer's authorized representative and documenting the receipt of consent from the consumer or the consumer's authorized representative pursuant to § 155.220(j)(2)(ii) and (iii), respectively, during the same conversation with the consumer, or within the same document, as long as the documentation complies with the requirements set forth in § 155.220(j)(2)(ii)(A) and (B) and (j)(2)(iii)(A) through (C).

Comment: Some commenters stated that we should not take enforcement action against agents, brokers, or web-brokers who act in good faith to comply with these new requirements and who enter information on a consumer's Exchange application that the consumer has attested to be true, but that turns out to be inaccurate. Specifically, these commenters indicated accurate income projections for consumers who are self-employed or work flexible hours are difficult, and thus, can often end up being inaccurate. Some commenters also suggested that we should only enforce these requirements against agents, brokers, and web-brokers, and not against issuers, as issuers are not directly involved in enrolling consumers in Exchange coverage.

Response: We do not initiate enforcement actions against agents, brokers, and web-brokers who act in good faith to provide the FFEs and SBE–FPs with correct information and where there is a reasonable cause for the failure to provide correct information.[216] We understand that income projections are purely estimates and a consumer's yearly income may be different than projected, especially for those who are self-employed or work flexible hours. As such, assuming the agent, broker or web-broker meets the applicable requirements and maintains the necessary documentation, we believe the situation described by these commenters is an example in which an agent, broker, or web-broker has acted in good faith and there is a reasonable cause for the failure to provide correct information such that no enforcement action would be taken and no penalties would be imposed. In addition, we note that the requirements contained in § 155.220(j)(2)(ii)(A) apply specifically to agents, brokers, and web-brokers, and not to issuers.

Comment: A few commenters suggested the proposed record retention period of 10 years is too long for agents, brokers, and web-brokers to maintain the documentation required by § 155.220(j)(2)(ii)(A). Another commenter stated we should have the record retention period match align with the required record retention period of the State where the consumer is enrolled.

Response: Please see the accompanying information collection section IV.F (ICRs Regarding Providing Correct Information to the FFEs (§ 155.220(j)) of this final rule for the response to these comments.

Comment: We also received several comments related to agents, brokers, and web-brokers switching their National Producer Numbers on consumers' applications, a lack of respect towards agents, brokers, and web-brokers, and agent, broker, and web-broker commissions, which were outside the scope of these proposals.

Response: Although we appreciate these commenters' interest in the policies governing consumer review and attestation of their application information prior to submission, given that these comments are out-of-scope with regard to these specific proposals, we decline to comment on them at this time.

c. Documenting Receipt of Consumer Consent (§ 155.220(j))

We proposed to amend § 155.220(j)(2)(iii) to require agents, brokers, or web-brokers assisting with and facilitating enrollment in coverage through FFEs and SBE–FPs or assisting

[213] See, for example, § 155.260, 45 CFR part 164, subparts A and E, and the Health Insurance Portability and Accountability Act of 1996, Pub. L. 104–191, H.R. 3103, 104th Cong.

[214] See sections 1411(b)(3) and 1412(b)(2) of the ACA and redesignated § 155.220(j)(2)(ii)(E).

[215] See sections 1411(c)(3) and 1412(b)(2) of the ACA and redesignated § 155.220(j)(2)(ii)(E).

[216] See § 155.220(j)(3), which states ''If an agent, broker, or web-broker fails to provide correct information, he, she, or it will nonetheless be deemed in compliance with paragraphs (j)(2)(i) and (ii) of this section if HHS determines that there was a reasonable cause for the failure to provide correct information and that the agent, broker, or web-broker acted in good faith.''

an individual with applying for APTC and CSRs for QHPs to document the receipt of consent from the consumer, or the consumer's authorized representative designated in compliance with § 155.227, qualified employers, or qualified employees they are assisting. We proposed that documentation of receipt of consent would be created by the assisting agent, broker, or web-broker and would require the consumer seeking to receive assistance, or the consumer's authorized representative, to take an action that produces a record that can be maintained by the agent, broker, or web-broker and produced to confirm the consumer's or their authorized representative's consent was provided. With regard to the content of the documentation of consent, in addition to the date consent was given, name of the consumer or their authorized representative, and the name of the agent, broker, web-broker, or agency being granted consent, we proposed the documentation would be required to include a description of the scope, purpose, and duration of the consent provided by the consumer, or their authorized representative, as well as the process by which the consumer or their authorized representative may rescind such consent. Lastly, we proposed that documentation of the consumer's or their authorized representative's, consent be maintained by the agent, broker, or web-broker for a minimum of 10 years and produced upon request in response to monitoring, audit, and enforcement activities conducted consistent with § 155.220(c)(5), (g), (h) and (k).

Currently, § 155.220(j)(2)(iii) requires agents, brokers, or web-brokers assisting with or facilitating enrollment in coverage through the FFEs or SBE–FPs or assisting an individual in applying for APTC and CSRs for QHPs to obtain the consent of the individual, employer, or employee prior to providing such assistance. However, § 155.220(j)(2)(iii) does not currently require agents, brokers, or web-brokers to document the receipt of consent. As provided in the proposed rule (87 FR 78254), we have observed several cases in which there have been disputes between agents, brokers, or web-brokers and the individuals they are assisting, or between two or more agents, brokers, or web-brokers, about who has been authorized to act on behalf of a consumer or whether anyone has been authorized to do so. We have also received complaints alleging enrollments by agents, brokers, and web-brokers that occurred without the consumer's consent, and have encountered agents, brokers, and web-brokers who attest they have obtained consent and have acted in good faith, but who do not have reliable records of such consent to defend themselves from allegations of misconduct. Thus, we proposed this standard because, as noted in the proposed rule (87 FR 78254), we believe that it will be beneficial to have reliable records of consent to help with the resolution of such disputes or complaints and to minimize the risk of fraudulent activities such as unauthorized enrollments. For these reasons, we proposed to revise § 155.220(j)(2)(iii) to require agents, brokers, and web-brokers to document the receipt of consent from the consumer seeking to receive assistance or the consumer's authorized representative, employer, or employee prior to assisting with or facilitating enrollment through the FFEs and SBE–FPs, making updates to an existing application or enrollment, or assisting the consumer in applying for APTC and CSRs for QHPs.

We also proposed to establish in proposed new § 155.220(j)(2)(iii)(A) through (C) standards for what constitutes obtaining and documenting consent to provide agents, brokers, and web-brokers with further clarity regarding this proposed requirement. First, we proposed to add new proposed § 155.220(j)(2)(iii)(A) to establish that obtaining and documenting the receipt of consent would require the consumer seeking to receive assistance, or the consumer's authorized representative designated in compliance with § 155.227, to take an action that produces a record that can be maintained by the agent, broker, or web-broker and produced to confirm the consumer's or their authorized representative's consent has been provided.

We noted that we did not intend to prescribe the method to document receipt of individual consent, so long as whatever method is chosen requires the consumer or their authorized representative to take an action and results in a record that can be maintained and produced by the agent, broker, or web-broker. Therefore, we proposed to include in new proposed § 155.220(j)(2)(iii)(A) a non-exhaustive list of acceptable means to document receipt of consent, including obtaining the signature of the consumer or their authorized representative (electronically or otherwise), verbal confirmation by the consumer or their authorized representative that is captured in an audio recording, a response from the consumer or their authorized representative to an electronic or other communication sent by the agent, broker, or web-broker, or other similar means or methods that HHS specifies in guidance. Other methods of documenting individual consent may be acceptable, such as requiring individuals to create user accounts on an agent's or agency's website where they designate or indicate the agents, brokers, or web-brokers to whom they have provided consent. We proposed that agents, brokers, and web-brokers would also be permitted to continue to utilize State Department of Insurance forms, such as agent or broker of record forms, provided these forms cover the minimum requirements that the documentation include the date consent was given, the name of the consumer or their authorized representative, the name of the agent, broker, web-broker, or agency being granted consent, a description of the scope, purpose, and duration of the consent obtained by the individual, as well as a process through which the consumer or their authorized representative may rescind consent. We noted that if agents, brokers, and web-brokers have already adopted consent documentation processes consistent with this proposed framework, no changes would be required. We noted in the proposed rule (87 FR 78206, 78254) that we intend to allow for documentation methods well-suited to the full range of ways agents, brokers, and web-brokers interact with consumers they are assisting (for example: in-person, via phone, electronic communications, use of an agent's or agency's website, etc.). We also noted that we intend for the primary applicant to be able to provide consent on behalf of other applicants (for example, dependents or other household members), and authorized representatives to be able to provide consent on behalf of the people they are designated to represent (for example, incapacitated persons), as it may be difficult or impossible to obtain consent from each individual whose information is included on an application. This would allow agents, brokers, and web-brokers to continue assisting individuals as they currently do (for example, often by working with an individual representing a household when submitting an application for a family).

Second, we proposed to require at new proposed § 155.220(j)(2)(iii)(B) that the consent documentation must include the date consent was given, name of the consumer or their authorized representative, name of the agent, broker, web-broker, or agency being granted consent, a description of the scope, purpose, and duration of the

consent obtained by the individual, as well as a process through which the consumer or their authorized representative may rescind consent. Agents, brokers, and web-brokers may work with individuals in numerous capacities. For example, they may assist individuals with applying for financial assistance and enrolling in QHPs through the FFEs and SBE–FPs, as well as shopping for other non-Exchange products. Similarly, agents, brokers, and web-brokers may have different business models such that individuals may interact with specific individuals consistently or numerous individuals representing a business entity that may vary upon each contact (for example, call center representatives), and the methods of interaction may vary as well (for example: in-person, phone calls, use of an agent's or agency's website etc.). In addition, individuals may wish to change the agents, brokers, or web-brokers they work with and provide consent to over time. For these reasons, the scope, purpose, and duration of the consent agents, brokers, and web-brokers seek to obtain from individuals can vary widely. Therefore, as noted in the proposed rule (87 FR 78254 through 78255), this proposal is intended to ensure individuals are making an informed decision when providing their consent to the agents, brokers, or web-brokers assisting them, that individuals can make changes to their provision of consent over time, and that the documentation of consent at a minimum captures who is providing and receiving consent, for what purpose(s) the consent is being provided, when consent was provided, the intended duration of the consent, and how specifically consent may be rescinded. We noted that we expect the information in the consent documentation will align with the information in the corresponding individuals' applications (for example: names, phone numbers, or email addresses should align as applicable depending on whether the consent is obtained via email, text message, call recording, or otherwise), except for in instances in which consent is being provided by an authorized representative.

Lastly, at new proposed § 155.220(j)(2)(iii)(C), we proposed to require agents, brokers, and web-brokers to maintain the documentation described in proposed § 155.220(j)(2)(iii)(A) for a minimum of 10 years. Section 155.220(c)(5) states HHS or its designee may periodically monitor and audit an agent, broker, or web-broker to assess their compliance with applicable requirements. However, there is not currently a maintenance of records requirement directly applicable to all agents, brokers, and web-brokers assisting consumers through the FFEs and SBE–FPs.[217] Capturing a broad-based requirement mandating that all agents, brokers, and web-brokers assisting consumers in the FFEs and SBE–FPs to maintain the records and documentation demonstrating receipt of consent from consumers or their authorized representative would provide a clear, uniform standard. It would also ensure these records and documentation are maintained for sufficient time to allow for monitoring, audit, and enforcement activities to take place.[218] Therefore, consistent with other Exchange maintenance of records requirements,[219] we proposed to capture in new proposed § 155.220(j)(2)(iii)(C) that agents, brokers, and web-brokers would be required to maintain the documentation described in proposed § 155.220(j)(2)(iii)(A) for a minimum of 10 years, and produce the documentation upon request in response to monitoring, audit and enforcement activities conducted consistent with § 155.220(c)(5), (g), (h) and (k).

We sought comment on these proposals, including whether there are other means or methods of documentation that we should consider specifying are permissible for purposes of documenting the receipt of consent from consumer or their, qualified employers, or qualified employees.

After reviewing the public comments, we are finalizing these proposals as proposed. We are making a technical update to § 155.220(j)(2)(iii)(A) to add in the phrase ''or other similar means or methods that HHS specifies in guidance'' to align with and capture the proposed policy, as reflected in the preamble of the proposed rule, and which is being finalized in this final rule, as proposed.

[217] Section 155.220(c)(3)(i)(E) requires web-brokers to maintain audit trails and records in an electronic format for a minimum of 10 years and cooperate with any audit under this section. Section 156.340(a)(2) places responsibility on QHP issuers participating in Exchanges using the Federal platform to ensure their downstream and delegated entities (including agents and brokers) are complying with certain requirements, including the maintenance of records requirements in § 156.705. Section 156.705(c) requires QHP issuers in the FFEs to maintain certain records for 10 years.

[218] While investigations consumer complaints are an example of a more immediate, real-time monitoring and oversight activity, market conduct examinations, audits, and other types of investigations (for example, compliance reviews) may occur several years after the applicable coverage year.

[219] See, for example, 45 CFR 155.220(c)(3)(i)(E) and 156.705(c).

We summarize and respond to public comments received on the proposals related to the documentation of consumer consent and the associated document retention policy below.

Comment: Multiple commenters expressed their support of these proposals. These commenters stated they believed these new requirements would help eliminate unauthorized enrollments and protect consumers. Many of these commenters recommended that we allow agents, brokers, and web-brokers to maintain the flexibility to determine the method by which they will meet these requirements.

Response: We agree with these commenters and are finalizing these proposals as proposed. As discussed in the proposed rule, to ensure continued flexibility for agents, brokers, and web-brokers, we have not mandated a specific method by which agents, brokers, and web- brokers must meet these requirements. The technical update we are making to § 155.220(j)(2)(iii)(A) to add in the phrase ''or other similar means or methods that HHS specifies in guidance'' aligns the regulatory text with the preamble and further emphasizes this flexibility, as the means or methods by which acceptable documentation may be obtained by agents, brokers, and web-brokers are not being mandated and may be updated by HHS in guidance.

Comment: Some commenters expressed concern these new requirements would impose heavy burdens on agents, brokers, and web-brokers due to the additional time that would be required for agents, brokers, and web-brokers to implement and come into compliance with these new requirements. Some of these commenters stated the additional time required to meet these new requirements would be more burdensome during the Open Enrollment Period. Other commenters stated the additional time associated with implementing and complying with these new requirements would discourage consumers from enrolling in coverage through the FFEs and SBE–FPs, as well as agents, brokers, and web-brokers from assisting consumers in the FFEs and SBE–FPs.

Response: We recognize these new requirements will likely require agents, brokers, and web-brokers to spend more time with each consumer to ensure that consumer consent is documented and that this may affect agents, brokers, and web-brokers more so during the Open Enrollment Period. However, we believe the benefits of these new requirements

outweigh any potential negative impact on agents, brokers, web-brokers, or consumers. Existing rules require agents, brokers, and web-brokers to obtain consumer consent prior to assisting them with Exchange enrollment or applying for APTC and CSRs for QHPs.[220] Therefore, we believe that requiring a record of that consent be documented and maintained will not add significant burdens on agents, brokers, and web-brokers.

Additionally, as discussed in the proposed rule (87 FR 78254), we believe having a reliable record of consent will help with the resolution of disputes between agents, brokers, or web-brokers and the individuals they are assisting, or between two or more agents, brokers, or web-brokers, about who has been authorized to act on behalf of a consumer or whether anyone has been authorized to do so; the resolution of consumer complaints; and minimize the risk of fraudulent activities such as unauthorized enrollments. Finally, as discussed in the proposed rule (87 FR 78254), we did not propose to specify a method for documenting that consumer consent was provided. This flexibility will allow each individual agent, broker, or web-broker to establish protocols and methods that will meet their needs in the most efficient manner. We believe this flexibility, and that the fact that these new requirements are simply building on existing requirements,[221] will minimize the burdens associated with implementing these new requirements. In fact, we believe that these new requirements, which are intended to protect consumers, prevent fraud and abusive conduct, and ensure the efficient and effective operation of the Exchanges on the Federal platform, will encourage more consumers to purchase health insurance through the Exchanges. We will, however, monitor Exchange enrollment data and agent, broker, web-broker participation in future years to analyze if these new requirements have a noticeable negative impact.

Comment: Multiple commenters expressed concerns regarding the disclosure of consumers' PII. These commenters stated that they believe these new requirements would lead to more improper disclosures of consumer PII as agents, brokers, and web-brokers would be storing more consumer PII than in the past.

Response: We do not believe these new requirements will lead to more improper disclosures of consumer PII. These new requirements do not require agents, brokers, and web-brokers to record or keep consumer PII beyond what an agent, broker, or web-broker currently records and maintains. Section 155.220(j)(2)(iii)(A) requires that agents, brokers, and web-brokers document the receipt of consent from a consumer or the consumer's authorized representative. Under § 155.220(j)(2)(iii)(B), such documentation is required to include a description of the scope, purpose, and duration of the consent provided, the date consent was given, the name of the consumer or their authorized representative, the name of the agent, broker, web-broker, or agency being granted consent, and a process through which the consumer or their authorized representative may rescind the consent. The only piece of PII required for this documentation is the consumer's name, which an agent, broker, or web-broker would already be recording and maintaining in their files.

A recorded conversation, during an over-the-phone enrollment or otherwise, could potentially contain more consumer PII than what the regulations require, as additional consumer information may be revealed during the conversation and the enrollment process. However, we do not believe this will lead to more improper disclosures of consumer PII. Agents, brokers, and web-brokers are already required to adhere to applicable State or Federal laws concerning the safeguarding of consumer PII, including § 155.220(g)(4) and (j)(2)(iv), and HIPAA.[222] These same requirements and protections continue to apply. Additionally, an agent, broker, or web-broker that elects to implement the phone recording method to meet these new requirements would only be required to record the portion of the conversation in which the consumer or consumer's representative provides consent to demonstrate compliance, which would reduce the amount of consumer PII in the recorded conversation. This would further reduce or eliminate the potential of improper disclosures of consumer PII.

Comment: Some commenters suggested these new requirements would add a disproportionate burden on smaller agencies and independent agents, brokers, and web-brokers, particularly with regard to the initial costs of implementing these new requirements. These commenters stated larger agencies are better equipped to implement these new requirements and absorb the costs associated with them.

Response: We acknowledge that larger agencies may be better equipped to implement these new requirements. There will be upfront costs associated with these new requirements, potentially including purchasing recording software, upgrading storage capacity, or hiring new personnel. Larger agencies typically have more resources to allocate towards meeting new industry standards, as is the case in other business fields as well. However, we do not believe these new requirements will be cost prohibitive to smaller agencies or independent agents, brokers, and web-brokers. As discussed above, we are not mandating the method by which agents, brokers, and web-brokers must meet these new requirements. Therefore, smaller agencies and independent agents, brokers, and web-brokers have the flexibility to meet these requirements utilizing the most efficient and cost-effective method that meets their business needs. Additionally, as mentioned previously, these new requirements are simply building on existing requirements to obtain consumer consent prior to assisting with or facilitating enrollment through an FFE or assisting the individual in applying for APTC and CSRs for QHPs,[223] which we believe will alleviate the burdens and costs associated with these new requirements for agents, brokers, and web-brokers of all sizes.

Comment: Multiple commenters stated they believed these new requirements would be more difficult to implement over the phone, which would negatively impact consumers without internet access (that is, lower income) or those who are less proficient with technology.

Response: We disagree that these requirements will be more difficult to implement over the phone than with respect to other enrollment methods. As is the case today, consumers will be able to enroll in QHPs and apply for APTC and CSRs for such coverage over the phone, in-person, and via the internet. The flexibility to choose what method is utilized to document that consumer consent has been obtained will allow agents, brokers, and web-brokers to implement these new requirements in a manner that is least burdensome to them. Agents, brokers, and web-brokers may also use this flexibility to implement different methods to comply with these requirements depending on the circumstances of each consumer

[220] See 45 CFR 155.220(j)(2)(iii).

[221] See 45 CFR 155.220(j)(2)(iii).

[222] See, for example, 45 CFR 155.260, 45 CFR part 164, subparts A and E, and the Health Insurance Portability and Accountability Act of 1996, Public Law 104–191, H.R. 3103, 104th Cong (42 U.S.C. 1320d–2).

[223] See § 155.220(j)(2)(iii).

they are assisting. Different implementation methods include, but are not limited to, obtaining the signature of the consumer or their authorized representative (electronic or otherwise), verbal confirmation by the consumer or their authorized representative that is captured in an audio recording, where legally permissible, or a written response (electronic or otherwise) from the consumer or their authorized representative to a communication sent by the agent, broker, or web-broker.

As such, to implement these new requirements for over-the-phone enrollments, where legally permissible and in accordance with applicable requirements,[224] agents, brokers, and web-brokers can record phone conversations with consumers or their authorized representatives to comply with § 155.220(j)(2)(iii)(A) and (B). For example, during these conversations, an agent, broker, or web-broker may ask the consumer or the consumer's authorized representative if they have provided consent. A recording of the consumer's or their authorized representative's response to this question, if it meets the requirements in § 155.220(j)(iii)(A) and (B), would be sufficient to meet these new requirements. We understand that saving recorded conversations may be more difficult than other mediums due to the digital space requirements and recording software needed, but is not an excessive burden as there are numerous recording software options to choose from and external hard drives are widely available for purchase. Where legally permissible, it will be the choice of the agent, broker, or web-broker if recording phone conversations is the best method for them to implement these requirements for over-the-phone enrollments. At the same time, we recognize there may be reasons agents, brokers and web-brokers would also want to have other methods available for over-the-phone enrollments. For example, in situations where a phone recording is not possible, agents, brokers and web-brokers may send the consumer or their authorized representative an email or text message after talking with them over the phone. The consumer or their authorized representative may respond to this email or text message, acknowledging they have provided consent. When in-person assistance is provided, the agent, broker or web-broker may want to offer the recording methods and other options that it uses for over-the-phone enrollments. The agent, broker, or web-broker may also want to implement a method for in-person assistance that involves obtaining the signature of the consumer or authorized representative (electronic or otherwise) given the face-to-face nature of the interaction. Similarly, agents, brokers and web-brokers should consider what methods meets their business needs, and those of their consumers, for enrollments over the internet. While we are not mandating that agents, brokers, and web-brokers adopt all of these different implementation methods, we encourage agents, brokers and web-brokers to exercise this flexibility in a manner that accommodates the various enrollment methods they use with their respective consumers. Additionally, if an agent, broker, or web-broker is not able to accommodate a consumer (for example, the consumer does not have access to the internet or is not proficient with technology but the specific agent, broker, or web-broker only engages in enrollments via the internet), the consumer may find another agent, broker, or web-broker that can meet their needs.

We believe these new requirements will help protect consumers, including those who may be in underserved groups, rather than inhibit their enrollment in Exchange coverage. Further, we frequently see unauthorized enrollments impact underserved groups of consumers in greater numbers than other groups. Often, agents, brokers, and web-brokers who engage in noncompliant or fraudulent behavior target low-income consumers or consumers with limited English proficiency. By requiring that agents, brokers, and web-brokers document that consumers or their authorized representatives have provided their consent, we believe that these consumer harms and the impact on underserved groups can be mitigated. In addition, requiring agents, brokers, and web-brokers to document that consumer consent was received and to maintain the record for 10 years will provide us with more conclusive evidence when pursuing enforcement actions against agents, brokers, or web-brokers for potentially fraudulent activities.

Comment: Multiple commenters suggested these new requirements related to the documentation of consumer consent are unnecessary as the requirement to obtain consumer consent already exists, either under Federal or State law or in the agent, broker, or web-broker's Exchange agreement(s).

Response: We disagree that these new requirements related to the documentation of consumer consent are unnecessary or duplicative of existing requirements. While agents, brokers, and web-brokers are currently required to obtain consumer consent prior to providing the consumer with assistance pursuant to § 155.220(j)(2)(iii), this section does not currently require agents, brokers, or web-brokers to document the receipt of consent and maintain such documentation for a specified period of time. As discussed in the proposed rule (87 FR 78254), we believe requiring such documentation of consent is crucial for two reasons. First, we believe this requirement will help minimize the risk of fraudulent activities, such as unauthorized enrollments. Second, it will help us resolve disputes and adjudicate claims related to the provision of consumer consent.

Comment: One commenter suggested that the documentation of consumer consent requirement is unnecessary as unauthorized enrollments in Exchange coverage do not occur for consumers under the age of 65.

Response: We have observed numerous unauthorized Exchange enrollments that have occurred for consumers under the age of 65. This is especially true with regard to consumers with limited English proficiency or underserved populations, including unhoused individuals. We believe these new requirements will help mitigate the risk of unauthorized enrollments for consumers of all ages.

Comment: Several commenters stated that we should allow agents, brokers, and web-brokers to meet these new requirements under § 155.220(j)(2)(iii) and the new requirements related to documenting that eligibility application information has been reviewed by and confirmed to be accurate by the consumer or the consumer's authorized representative under § 155.220(j)(2)(ii) during the same consumer interaction and/or within the same document.

Response: Agents, brokers, or web-brokers are not prohibited from documenting that eligibility application information has been reviewed by and confirmed to be accurate by the consumer or the consumer's authorized representative and documenting the receipt of consent from the consumer or the consumer's authorized representative pursuant to § 155.220(j)(2)(ii) and (iii), respectively, during the same conversation with the consumer, or within the same document, as long as the documentation

[224] We recognize that there are Federal and State laws that govern the legality of recording phone calls and conversations that may impact an agent, broker, or web-broker's ability to record phone or oral communications with consumers or that may require an agent, broker, or web-broker to obtain the consumer's consent prior to recording such communications (see, for example, 18 U.S.C. 2511).

complies with the requirements set forth in § 155.220(j)(2)(ii)(A) and (B) and (j)(2)(iii)(A) through (C).

Comment: Some commenters recommended that we allow consumers to grant consent to multiple agents, brokers, or web-brokers simultaneously.

Response: As noted in the proposed rule (87 FR 78254), we are not directing agents, brokers, or web-brokers on how to comply with these new documentation requirements. In the Model Consent Form [225] that accompanied the proposed rule, we included an option for a consumer to provide consent to an agency rather than an individual agent, broker, or web-broker. At this time, providing consent to an agency or multiple agents, brokers, or web-brokers simultaneously is permitted, provided the consent documentation complies with the requirements contained in § 155.220(j)(2)(iii).

Comment: A few commenters suggested the proposed record retention period of 10 years is too long for agents, brokers, and web-brokers to maintain the documentation required by § 155.220(j)(2)(iii)(C). Another commenter stated we should have record retention period align with the record retention period of the State where the consumer is enrolled.

Response: Please see the accompanying information collection section IV.F. (ICRs Regarding Providing Correct Information to the FFEs (§ 155.220(j)) of this final rule for the response to these comments.

Comment: One commenter suggested we define what consent is so that it may be standardized. This commenter also suggested we delay implementation of these documentation requirements until PY 2025, or exercise enforcement discretion with regard to those agents, brokers, and web-brokers making good-faith efforts to meet these requirements during PY 2024.

Response: After considering these comments, we decline to define consent. We believe the term consent is unambiguous and the new requirements in § 155.220(j)(2)(iii)(A) through (C) will provide agents, brokers, and web-brokers with a clear picture of what obtaining and documenting the receipt of consent requires under § 155.220(j)(2)(iii). In addition, we decline to delay implementation of these requirements until PY 2025. As noted in the proposed rule (87 FR 78254) and above, the goal of these requirements is to prevent fraudulent activities such as unauthorized enrollments, to help resolve disputes between agents, brokers, and web-brokers and consumers related to consumer consent, reduce consumer harm, and support the efficient operation of the Exchanges. If we delay implementation of these documentation requirements, consumers may be negatively impacted when that impact could have been avoided. Additionally, we do not plan on targeting agents, brokers, or web-brokers who are acting in good faith to meet these new requirements. Our primary goal is to address situations involving noncompliance by actors who are not acting in good faith, with a particular focus on fraudulent activities in the FFEs and SBE–FPs. Our experience shows long-standing patterns of this activity with the potential to impact a large number of consumers with potentially severe consequences (for example, termination of coverage, unanticipated tax liability).

Comment: We also received several comments that were outside the scope of these proposals related to the documentation of consumer consent, including the need to have the Exchange(s) obtain and maintain consent documentation instead of the agent, broker, or web-broker, as well as having the Exchange(s) email consumers when changes on an application are made.

Response: Although we appreciate the commenters' interest in policies governing the documentation of consumer consent, given that these comments are out-of-scope with regard to these specific proposals, we decline to comment on them at this time.

4. Eligibility Standards (§ 155.305)

a. Failure To File and Reconcile Process (§ 155.305(f)(4))

In the HHS Notice of Benefit and Payment Parameters for 2024 proposed rule (87 FR 78206, 78255), we proposed to amend § 155.305(f)(4) which currently prohibits an Exchange from determining a taxpayer eligible for APTC if HHS notifies the Exchange that a taxpayer (or a taxpayer's spouse, if married) has failed to file a Federal income tax return and reconcile their past APTC for a year for which tax data from the IRS will be utilized for verification of household income and family size in accordance with § 155.320(c)(1)(i).

As background, Exchange enrollees whose taxpayer fails to comply with current § 155.305(f)(4) are referred to as having failed to ''file and reconcile.'' Since 2015, HHS has taken regulatory and operational steps to help increase taxpayer compliance with filing and reconciliation requirements under section 36B(f) of the Code and its implementing regulations at 26 CFR 1.36B–4(a)(1)(i) and (a)(1)(ii)(A) by tying eligibility for future APTC to the taxpayer's reconciliation of past APTC paid. However, since the finalization of the requirement at § 155.305(f)(4), HHS has determined that the operational costs of the current policy are significant and can be improved to provide a better consumer experience, while also preserving an Exchange's duty to protect program integrity. Exchanges have faced a longstanding operational challenge, specifically that Exchanges sometimes have to determine an enrollee ineligible for APTC without having up-to-date information on the tax filing status of households while Federal income tax returns are still being processed by the IRS. Currently, Exchanges determine an enrollee ineligible for APTC if the IRS, through data passed from the IRS to HHS, via the Federal Data Services Hub (the Hub), notifies an Exchange that the taxpayer did not comply with the requirement to file a Federal income tax return and reconcile APTC for one specific tax year. To address the challenge of receiving up-to-date information, and to promote continuity of coverage in an Exchange QHP, we proposed a new process for Exchanges to conduct FTR while also ensuring that Exchanges preserve program integrity by paying APTC only to consumers who are eligible to receive it. HHS believes that any FTR process should encourage compliance with the filing and reconciling requirement under the Code and its implementing regulations, minimize the potential for APTC recipients to incur large tax liabilities over time, and support eligible enrollees' continuous enrollment in Exchange coverage with APTC by avoiding situations where enrollees become uninsured when their APTC is terminated.

For Exchanges using the Federal eligibility and enrollment platform, which includes the FFEs and SBE–FPs, taxpayers who have not met the requirement of § 155.305(f)(4) are put into the FTR process with the Exchange. As part of the normal process used by Exchanges using the Federal eligibility and enrollment platform during Open Enrollment, enrollees for whom IRS data indicates an FTR status for their taxpayer receive notices from the Exchange alerting them that IRS data

[225] CMS. (Dec. 14, 2022). *CMS Model Consent Form for Marketplace Agents and Brokers.* PRA package (CMS–10840, OMB 0938–XXXX). *https://www.cms.gov/regulations-and-guidance/legislation/paperworkreductionactof1995/pra-listing/cms-10840.*

shows that their taxpayer has not filed a Federal income tax return for the applicable tax year and reconciled APTC for that year using IRS Form 8962, *Premium Tax Credit (PTC).* FTR Open Enrollment notices sent directly to the taxpayer clearly state that IRS data indicates the taxpayer failed to file and reconcile, whereas FTR Open Enrollment notices sent to the applicant's household contact, who may or may not be the taxpayer, list a few different reasons consumers may be at risk of losing APTC, including the possibility that IRS data indicates the taxpayer failed to file and reconcile (because the Exchange is prohibited from sending protected tax information to an individual who may not be the tax filer). Notices to the applicant's household contact can be confusing because of the multiple reasons listed. Both Open Enrollment notices encourage taxpayers identified as having an FTR status to file their Federal income tax return and reconcile their APTC for that year using IRS Form 8962, or risk losing APTC eligibility for the next coverage year.

In late 2015, to allow consumers with an FTR status to be determined eligible for APTC temporarily (if otherwise eligible), HHS added a question to the single, streamlined application used by the Exchanges using the Federal eligibility and enrollment platform that allows enrollees to attest on their application, under the penalty of perjury, that they have filed and reconciled their APTC by checking a box that says, ''Yes, I reconciled premium tax credits for past years.'' [226] Enrollees who make this attestation and enroll in coverage during Open Enrollment retain their APTC, even if IRS data has not been updated to reflect their most current Federal income tax filing status or if the individual has not actually reconciled their APTC. Allowing enrollees to attest to filing and reconciling, even though IRS data indicates that they did not, is a critical step to safeguard enrollees from losing APTC erroneously as the IRS typically takes several weeks to process Federal income tax returns, with additional time required for returns or amendments that are filed using a paper process.

After Open Enrollment, Exchanges using the Federal platform then conduct a second look at FTR data to follow up and verify an enrollee's reconciliation attestation by conducting a verification of their taxpayer's FTR status early in the next coverage year, which includes additional notices to enrollees and taxpayers. This verification process early in the next coverage year is referred to as FTR Recheck. State Exchanges that operate their own eligibility and enrollment platform have each implemented similar processes to check the FTR status of their enrollees annually based on data provided by the IRS to identify and notify enrollees who are at risk of losing APTC eligibility, and to allow enrollees to attest under the penalty of perjury that they have filed and reconciled their APTC.

There are many reasons we proposed the changes to § 155.305(f)(4) described in the proposed rule (87 FR 78255 through 78257). HHS' and the State Exchanges' experiences with running FTR operations have shown that Exchange enrollees often do not understand the requirement that their taxpayer must file a Federal income tax return and reconcile their APTC or that they must also submit IRS Form 8962 to properly reconcile their APTC, even though the single, streamlined application used by Exchanges on the Federal platform and QHP enrollment process require a consumer to attest to understanding the requirement to file and reconcile in two places. For example, we are aware anecdotally that many third-party tax preparers, such as accountants, are not aware of the requirement to file and reconcile, nor prompt consumers to also include IRS Form 8962 along with their Federal income tax return. Although enrollees who rely on third party tax preparers such as accountants or third-party tax preparation software to prepare their Federal income tax returns are still required to file and reconcile even if their tax preparer was unaware of the requirement, consumers should have the opportunity to receive additional guidance from Exchanges on the requirement to file and reconcile to promote compliance and prevent termination of APTC.

While annual FTR notices help with this issue as the notices alert consumers that they did not provide adequate documentation to fulfill the requirement to file and reconcile, the current process that requires Exchanges to determine an enrollee ineligible for APTC after one year of having an FTR status is overly punitive. Some consumers may have their APTC ended due to delayed data, in which case their only remedy is to appeal to get their APTC reinstated. Consumers also may be confused or may have received inadequate education on the requirement to file and reconcile, in which case they must actually file, reconcile, and appeal to get their APTC reinstated. By requiring Exchanges to determine an enrollee ineligible for APTC only after having an FTR status for 2 consecutive tax years (specifically, years for which tax data will be utilized for verification of household income and family size), Exchanges will have more opportunity to conduct outreach to consumers whom data indicate have failed to file and reconcile to prevent erroneous terminations of APTC and to provide access to APTC for an additional year even when APTC would have been correctly terminated under the original FTR process. Under the proposed change, Exchanges on the Federal platform will continue to send notices to consumers for the year in which they have failed to reconcile APTC as an initial warning to inform and educate consumers that they need to file and reconcile or risk being determined ineligible for APTC if they fail to file and reconcile for a second consecutive tax year. This change will also alleviate burden on HHS hearing officers by reducing the number of appeals related to denial of APTC due to FTR, and prevent consumers who did reconcile, but for whom IRS data was not updated quickly enough, from having to go through an appeal process to have their APTC rightfully reinstated.

We believe in ensuring consumers have access to affordable coverage and place high value on consumers maintaining continuity of coverage in the Exchange, as we have found that FFE and SBE–FP enrollees who lose APTC tend to end their Exchange coverage and will experience coverage gaps, as they cannot afford unsubsidized coverage. In light of this, we believe it is imperative that any change to the current FTR operations be done carefully and that we thoughtfully balance how it enforces the requirement to file and reconcile, since a consequence of losing APTC effectively means many consumers may lose access to health insurance coverage for needed medical care.

Therefore, given these challenges that both Exchanges and consumers have faced with the requirement to file and reconcile, we proposed to revise § 155.305(f)(4) under which Exchanges will not be required, or permitted, to determine consumers ineligible for APTC due to having an FTR status for only one year. Given that our experience running FTR shows continued issues with compliance with the requirement to file and reconcile, we proposed that beginning on January 1, 2024, an applicant's FTR status will trigger an Exchange determination that the applicant is ineligible for APTC only if the applicant has an FTR status for 2 consecutive years (specifically, 2

[226] We note that this question was removed from the single streamlined application once the FTR process was paused in 2020 for the 2021 PY.

consecutive years for which tax data will be utilized for verification of household income and family size).

Due to the COVID–19 PHE starting in 2020, for PYs 2021 and 2022, we temporarily paused ending APTC for enrollees with an FTR status due to IRS processing delays of 2019 Federal income tax returns.[227] We then extended this pause for the PY 2023 in July 2022 and included flexibility for State Exchanges that operate their own eligibility and enrollment platforms to take similar action.[228] As a result of these changes, 55 percent of enrollees who were automatically re-enrolled during 2021 open enrollment with an FTR status remained enrolled in Exchange coverage as of March 2021. In contrast, only 12 percent of enrollees with an FTR status who were automatically re-enrolled without APTC during the 2020 open enrollment were still enrolled in coverage as of March 2020. These results show the significant impact that loss of APTC due to FTR status has on whether enrollees continue to remain in coverage offered through the Exchange, as these impacted enrollees must pay the full cost of their Exchange plan, which is often unaffordable without APTC.

We proposed to continue to pause APTC denials based on a failure to reconcile until HHS and the IRS are able to implement the new FTR policy. Until the IRS can update its systems to implement the new FTR policy, and we can notify the Exchange of an enrollee's consecutive two-year FTR status, the Exchange would not determine enrollee's ineligible for APTC based on either the one-year or two-year FTR status. We believe that removing APTC after 2 consecutive years of an FTR status instead of one would help consumers avoid gaps in coverage by increasing retention in the Exchange even if they have failed to reconcile for one year, and would reduce the punitive nature of the current process which may erroneously terminate APTC for consumers who have filed and reconciled. We also believe that these proposed changes would help protect consumers from accruing large tax liabilities over multiple years by notifying and ending APTC for consumers with an FTR status for 2 consecutive years. Finally, we believe these proposed changes would allow Exchanges to maintain program integrity by denying APTC to consumers who have, over the course of 2 years, been given ample notification of their obligation to file and reconcile and have nevertheless failed to do so.

We sought comment on these proposals, especially from States and other interested parties regarding tax burdens on consumers which would inform our decision on this proposal.

After reviewing the public comments, we are finalizing this provision as proposed, except that the final rule will become effective on the general effective date of the final rule, instead of January 1, 2024. As detailed in the responses to comments on these policies, some commenters sought clarity on when the policy would become effective, and others were concerned that changing the FTR policy would threaten the integrity of APTC available to eligible consumers. By allowing the policy to become generally effective prior to January 1, 2024, we are solidifying flexibility for HHS and IRS to resume FTR operations as soon as HHS and IRS are ready to begin. HHS will provide at least three months' notice to consumers and other interested parties prior to resuming FTR operations. We originally proposed a technical correction to clarify that HHS receives data from the IRS for consumers who have failed to file tax returns and reconcile a previous year's APTC. However, upon further review, this technical correction is not necessary because we believe that the original wording of the rule more accurately reflected how information is passed through the Federal Data Services Hub, and therefore, we are not finalizing this technical correction. Finally, we clarify that Exchanges must continue to pause APTC denials based on a failure to reconcile for one year under the currently effective regulation, or 2 years under the regulation we finalize here, until HHS and the IRS are able to implement the FTR policy.

We summarize and respond to public comments received on the proposed rule that an applicant's FTR status will result in an Exchange finding that the applicant is ineligible for APTC only if the applicant has an FTR status for 2 consecutive tax years.

Comment: Many commenters agreed with the proposal that an applicant's FTR status will result in an Exchange determination that the applicant is ineligible for APTC only if the applicant has an FTR status for 2 consecutive tax years. Commenters agreed that the two-year FTR proposal better protects financially vulnerable enrollees compared to the current one-year FTR process. Several commenters added that Exchanges still face operational challenges, and enrollees should not be financially penalized in the case of an unintentional technical issue within the Exchange. A commenter also stated the proposed change will positively promote continuity of coverage for consumers enrolled in Exchange coverage. Additionally, many commenters stated that the proposal would allow for more consumer education on the requirement to file and reconcile past APTC received and the process for doing so, while protecting consumers from accruing large tax liabilities over multiple years.

Response: We agree that the proposed FTR policy will improve continuity of coverage for consumers by ensuring that consumers do not become uninsured because their Exchange coverage becomes unaffordable after losing APTC. Continuity of coverage is especially important for consumers with chronic health conditions such as cancer. Additionally, the proposed policy would protect consumers from incurring large tax liabilities over multiple years, which may especially benefit consumers with household incomes over 400 percent of the Federal poverty level (FPL), who are not subject to APTC repayment caps, and whose potential tax liability from failing to reconcile APTC may be larger. Nonetheless, it is still a statutory requirement[229] that consumers file their Federal income taxes and reconcile past APTC received, regardless of their FPL level or risk for tax liability, and we will continue to implement policies that work towards ensuring that only those consumers who are eligible to receive APTC continue to do so. We believe that the proposed policy strikes a balance between protecting consumers from large tax liabilities, such as those with household incomes above 400 percent of the FPL, while also ensuring program integrity for all Exchanges.

Comment: A few comments from State Exchanges supported the proposal but asked that we provide clear and early information about the technical specifications and processes that will be required to implement the FTR rule as proposed within State Exchange's systems.

Response: We agree that clear communication about technical specifications and the processes that will be required to implement the FTR

[227] See CMS. (2021, July 23) *Failure to File and Reconcile (FTR) Operations Flexibilities for Plan Years 2021 and 2022—Frequently Asked Questions (FAQ). https://www.cms.gov/CCIIO/Resources/Regulations-and-Guidance/FTR-flexibilities-2021-and-2022.pdf.*

[228] See CMS. (2022, July 18). *Failure to File and Reconcile (FTR) Operations Flexibilities for Plan Year 2023. https://www.cms.gov/CCIIO/Resources/Regulations-and-Guidance/FTR-flexibilities-2023.pdf.*

[229] Internal Revenue Code section 36B; 26 CFR 1.36B 4(a)(1)(i); *see also https://www.irs.gov/affordable-care-act/individuals-and-families/premium-tax-credit-claiming-the-credit-and-reconciling-advance-credit-payments#Advance.*

rule would be beneficial. As such, we will work with all parties involved to make sure the FTR process is explained clearly prior to and during implementation.

Comment: A few commenters, including several State Exchanges, supported the policy, but requested clarification on the intended implementation timeline of the new FTR proposal. Commenters requested adequate time to implement necessary technical changes, allow Medicaid unwinding efforts to be completed, and ensure alignment with IRS provisions and systems.

Response: In the proposed rule (87 FR 78256), we stated that policy would become effective on January 1, 2024. The proposed FTR regulation provided that ineligibility based on FTR status would apply when IRS notifies HHS and HHS then notifies the Exchanges that a tax filer or their spouse did not comply with the requirement to file an income tax return and reconcile APTC for a year for which tax data would be utilized for verification of household income and family size. Based on information on the availability of data from IRS, we intend to continue pausing implementation of the FTR requirement on Exchanges on the Federal platform until data from IRS about APTC reconciliation is available to HHS, which we expect to be available for eligibility determinations for PY 2025, and we expect that State Exchanges are doing likewise. Exchanges on the Federal platform expect such information to be available, and to first take action to apply the new FTR rule, in September 2024, when batch auto re-enrollment (BAR) activities begin for PY 2025 eligibility determinations. During BAR, the Exchanges on the Federal platform will communicate with IRS to check whether enrollees have filed and reconciled for tax years 2022 and 2023 and set the appropriate FTR status code for enrollees who have not filed and reconciled APTC for tax years 2022 and 2023. Exchanges on the Federal platform will then send notices to enrollees who have either a one-year or two-year FTR status according to their 2022 and 2023 Federal income tax filings. Under the proposed change, Exchanges on the Federal platform will not deny APTC eligibility, but will continue to send notices to consumers for the first year in which they have failed to reconcile APTC to inform and educate them that they need to file and reconcile or risk being determined ineligible for APTC if they fail to file and reconcile for a second consecutive tax year.

Enrollees in Exchanges on the Federal platform who have been notified and have been determined to have a current two-year FTR status will no longer be eligible for APTC, consistent with the Exchanges' on the Federal platform FTR process, while those enrollees who have received the first-year notice will be encouraged to file and reconcile to avoid losing APTC eligibility the following year. Given the expected timing to resume accurately and timely notifying Exchanges of FTR status by September 2024, we believe there is enough time for Medicaid unwinding to take place and to ensure alignment with IRS systems. In response to commenter concerns regarding adequate notice of when the new FTR policy may be applied to deny APTC eligibility, and to provide HHS and IRS flexibility to resume FTR operations as soon as they are able to implement the policy, HHS will provide at least 3 months' notice before Exchanges are required to deny APTC to consumers who the IRS reports to have failed to reconcile APTC for 2 consecutive years.

Comment: Two commenters expressed concern for consumers who might experience a greater tax burden or tax liability if they are unable to reconcile their APTC after two years rather than one year and suggested we find a solution to alleviate this burden. We also received a few comments that neither supported nor opposed the proposal but raised concerns about consumer protections for enrollees facing high repayment effects, especially those with household incomes above 400 percent of FPL.

Response: We agree with the commenters that this proposal could place consumers at a risk for increased tax liability. In particular, taxpayers who underestimated their annual income when they enrolled in an Exchange QHP and are ultimately determined ineligible for APTC because of their FTR status, may be required to repay large amounts of APTC when they file their Federal income taxes and reconcile past APTC received. We agree that taxpayers with incomes above 400 percent of the FPL may face the highest repayment burdens if they fail to file and reconcile for 2 consecutive tax years as APTC repayments are not capped for this group. To mitigate this concern, we intend to continue issuing FTR warning notices for enrollees in Exchanges on the Federal platform who have not filed and reconciled for one tax year. We believe that annual FTR warning notices will remind this population of the potential for a large tax liability and prompt them to comply with the requirement to file and reconcile if they have not already. We encourage State Exchanges to take similar action.

Despite the potential for a large tax liability, we believe that this proposal will have a positive impact on consumers while still ensuring program integrity as it will provide better continuity of coverage for consumers who may not be aware of the requirement to file and reconcile. We are aware that some third-party tax preparers do not properly educate consumers on the importance of filing and reconciling and, in some instances, these third-party tax preparers are unaware that consumers have to file IRS Form 8962 along with their tax return to reconcile past APTC received. In implementing the new FTR requirement, Exchanges on the Federal platform will provide additional education, outreach, and initial warning notices for those consumers who are out of compliance with the filing and reconciling requirement after one year to avoid those high tax penalties. We will continue to monitor the implementation of this new policy including whether certain populations continue to experience large tax liabilities and will consider whether additional guidance, or any additional policy changes in future rulemaking, are necessary.

Comment: Two commenters supported the proposal and suggested that more outreach is needed to both consumers and tax preparers about the FTR process, the risk of noncompliance, and the process for determining eligibility.

Response: We agree with the commenter regarding the need for education and outreach for consumers, States, tax preparers, and interested parties that assist consumers with enrollment decisions, such as Assisters, agents, and brokers. As we monitor the implementation of this provision, we will consider providing additional guidance, education, and other technical assistance to Exchanges to adequately prepare consumers, States, tax preparers, and interested parties before the implementation is completed and FTR operations are resumed.

Comment: We received various comments regarding potential program integrity implications. One commenter fully opposed the proposal of removing APTC after an enrollee has been in an FTR status for 2 consecutive years, citing the risks of increased fraud and abuse by consumers who know they can ignore an FTR status for an additional year. Similarly, a few commenters neither supported nor opposed the proposal but cautioned HHS about

potential fraud and abuse by enrollees receiving excess premium tax credits.

Response: We understand and appreciate the commenters' concern regarding the risk for fraud and abuse with respect to this proposal. We acknowledge that there is some risk that enrollees may choose to ignore the requirement to file and reconcile, but we anticipate these instances will be limited as the majority of enrollees comply with the requirement to file and reconcile. Additionally, taxpayers who choose to ignore the requirement to file and reconcile may be subject to IRS enforcement action, additional tax liability, and possibly interest and penalties. We also note that nothing in this regulation changes the requirement for enrollees to file their Federal income tax return and reconcile the previous year's APTC with the IRS. We will continue to monitor the implementation of this policy by reviewing and monitoring yearly FTR consumer data and referring any instances of suspected fraud or abuse to the appropriate Federal agencies. We will also determine whether additional guidance, or any additional policy changes in future rulemaking to combat fraud and abuse, are necessary.

Comment: A few commenters urged HHS to fully repeal the FTR process, citing the threat it presents to continuity of coverage for consumers who are facing periods of intense care, the punitive nature of the FTR process towards consumers who cannot afford coverage, and the risk that a two-year FTR process does not sufficiently mitigate the unwarranted loss of APTC.

Response: We considered many factors in our decision to shift from a one-year FTR process to a two-year FTR process. We believe that the change properly balances consumer protections and program integrity concerns, and therefore, we believe we should continue to improve the FTR process rather than repeal it entirely.

5. Verification Process Related to Eligibility for Insurance Affordability Programs (§§ 155.315 and 155.320)

a. Income Inconsistencies

In the HHS Notice of Benefit and Payment Parameters for 2024 proposed rule (87 FR 78206, 78257), we proposed to amend § 155.320 to require Exchanges to accept an applicant's or enrollee's attestation of projected annual household income when the Exchange requests tax return data from the IRS to verify attested projected annual household income, but the IRS confirms there is no such tax return data available. We further proposed to amend § 155.315(f) to add that income inconsistencies must receive an automatic 60-day extension in addition to the 90 days provided by § 155.315(f)(2)(ii).

Section 155.320 sets forth the verification process for household income. The Exchange requires that an applicant or enrollee applying for financial assistance must attest to their projected annual household income. *See* § 155.320(a)(1) and (c)(3)(ii)(b). The regulation also requires that for any individual in the applicant's or enrollee's tax household (and for whom the Exchange has a SSN), the Exchange must request tax return data regarding income and family size from the IRS.[230] *See* § 155.320(c)(1)(i)(A). When the Exchange requests tax return data from the IRS and the data indicates that attested projected annual household income represents an accurate projection of the tax filer's household income for the benefit year for which coverage is requested, the Exchange must determine eligibility for APTC and CSR based on the IRS tax data. *See* § 155.320(c)(3)(ii)(C).

When the Exchange requests tax return data from the IRS and the IRS returns data that reflects that the attested projected annual household income *is not* an accurate projection of the tax filer's household income for the benefit year for which coverage is requested, the applicant or enrollee is considered to have experienced a change in circumstances, which allows HHS to establish procedures for determining eligibility for APTC on information other than IRS tax return data, as described in § 155.320(c)(3)(iii) through (vi). *See* section 1412(b)(2) of the ACA.

The Exchange also considers an applicant or enrollee to have experienced a change in circumstances when the Exchange requests tax return data from the IRS to verify attested projected household income, but the IRS confirms such data is unavailable. This is because tax data is usually unavailable when an applicant or enrollee has experienced a change in family size, other household circumstances (such as a birth or death), filing status changes (such as a marriage or divorce), or the applicant or enrollee was not required to file a tax return for the year involved. *See* section 1412(b)(2) of the ACA. When an applicant or enrollee has experienced a change in circumstances as described in section 1412(b)(2) of the ACA, the Exchange determines eligibility for APTC and CSR using alternate procedures designed to minimize burden and protect program integrity, described in § 155.320(c)(3)(iii) through (vi).

If an applicant or enrollee qualifies for an alternate verification process as described above, and the attested projected annual household income is greater than the income amount returned by the IRS, the Exchange accepts the applicant's attestation without further verification under § 155.320(c)(3)(iii)(A). If an applicant qualifies for an alternate verification process, and the attested projected annual household income is more than a reasonable threshold less than the income amount returned by the IRS, or there is no IRS data available, the Exchange generates an income inconsistency (also referred to as a data matching issue or DMI) and proceeds with the process described in § 155.315(f)(1) through (4), unless a different electronic data source returns an amount within a reasonable threshold of the projected annual household income. *See* § 155.320(c)(3)(iv) and (c)(3)(vi)(D). This process usually requires the applicant or enrollee to present satisfactory documentary evidence of projected annual household income. If the applicant fails to provide documentation verifying their projected annual household income attestation, the Exchange determines the consumer's eligibility for APTC and CSRs based on available IRS data, as required in § 155.320(c)(3)(vi)(F). However, if there is no IRS data available, the Exchange must determine the applicant ineligible for APTC and CSRs as required in § 155.320(c)(3)(vi)(G). We proposed to make clarifying revisions to the current regulations to ensure consistency between the regulations and the current operations of the Exchanges on the Federal platform, as described here.

We proposed to add § 155.320(c)(5) which would require Exchanges to accept an applicant's or enrollee's attestation of projected annual household income when the Exchange requests IRS tax return data but IRS confirms such data is not available because the current process is overly punitive to consumers and burdensome to Exchanges. There are many reasons for IRS not returning consumer data, aside from the consumer's failure to file tax returns, including tax household composition changes (such as birth, marriage, and divorce), name changes, or other demographic updates or mismatches—all of which are legitimate changes that currently cause a consumer

[230] The Exchange must also request data regarding Social Security Benefits from the Social Security Administration.

to receive an income DMI. Additionally, the consequence of receiving an income DMI and being unable to provide sufficient documentation to verify projected household income outweighs program integrity risks as, under § 155.320(c)(3)(vi)(G), consumers are determined completely ineligible for APTC and CSRs. For burden on Exchanges, DMI verification by the Exchange requires an outlay of administrative hours to monitor and facilitate the resolution of income inconsistencies. Within the Federal Platform, this administrative task accounts for approximately 300,000 hours of labor annually, which we believe is proportionally mirrored by State Exchanges.

Accordingly, we proposed to accept an applicant's or enrollee's attestation of projected annual household income when IRS tax return data is requested but is not available, and to determine the applicant or enrollee eligible for APTC or CSRs in accordance with the applicant's or enrollee's attested projected household income, to more fairly determine eligibility for consumers and to reduce unnecessary burden on Exchanges. This proposal is consistent with section 1412(b)(2) of the ACA, which allows the Exchange to utilize alternate verification procedures when a consumer has experienced substantial changes in income, family size or other household circumstances, or filing status, or when an applicant or enrollee was not required to file a tax return for the applicable year.[231] It is also consistent with the flexibility under section 1411(c)(4)(B) of the ACA to modify methods for verification of the information where we determine such modifications will reduce the administrative costs and burdens on the applicant.

The Exchange would continue to generate income DMIs when IRS tax data is available and the attested projected household income amount is more than a reasonable threshold below the income amount returned by the IRS, and other sources cannot provide income data within the reasonable threshold. Additionally, the Exchange would continue to generate income DMIs when IRS tax data cannot be requested because an applicant or enrollee did not provide sufficient information (namely, a social security number), and other sources cannot provide income data within the reasonable threshold of the attested projected household income.

Under section 1411(c)(3) of the ACA, data from the IRS is required to be used to determine if income is inconsistent. Exchanges on the Federal Platform do not use any other data sources for the purpose of generating income DMIs because there are currently no reliable and accurate income data sources legally available to such Exchanges that would provide quality data for this purpose. For Exchanges using the Federal platform, income data from other electronic data sources will continue to be used to verify income to avoid setting an income DMI when the attested projected household income amount is more than a reasonable threshold below the income amount returned by the IRS or IRS data cannot be requested.

However, we clarify that under § 155.315(h), State Exchanges are granted flexibility to modify the methods used for income collection and verification, subject to HHS' approval, which can include the use of alternative data sources. And, per § 155.320(c)(3)(vi), these HHS approved electronic data sources must be used, where available, in instances where IRS income data is unavailable or inconsistent. Accordingly, upon approval from HHS, State Exchanges may use alternative electronic data sources to generate income DMIs when IRS is unable to return data or if the projected household annual income is more than a reasonable threshold less than the income amount returned for the household by the alternative electronic data source. In order for the alternative electronic data to be used to generate an income DMI, the alternative electronic data source must maintain the same accuracy of the IRS data in providing an income data for verification by returning income data for all members of the household who have attested to earning income. If IRS is successfully contacted for a household but does not return data, and the alternative electronic data source does not provide full income data for the household, then the State Exchange must accept the applicant's or enrollee's attestation of projected annual household income.

Lastly, we proposed to revise § 155.315 to add new paragraph (f)(7) to require that applicants must receive an automatic 60-day extension in addition to the 90 days currently provided by § 155.315(f)(2)(ii) to allow applicants sufficient time to provide documentation to verify household income. The extension would be automatically granted when consumers exceed the allotted 90 days without resolving their household income DMI. This proposal aligns with current § 155.315(f)(3), which provides extensions to applicants beyond the existing 90 days if the applicant demonstrates that a good faith effort has been made to obtain the required documentation during the period. It is also consistent with the flexibility under section 1411(c)(4)(B) of the ACA to modify methods for verification of the information where we determine such modifications will reduce the administrative costs and burdens on the applicant.

We have found that 90 days is often an insufficient amount of time for many applicants to provide income documentation, since it can require multiple documents from various household members along with an explanation of seasonal employment or self-employment, including multiple jobs. As applicants are asked to provide a projection for their next year's income, they often submit documents that do not fully explain their attestation due to the complexities noted previously, which requires contact from the Exchange and additional document submission, often pushing the verification timeline past 90 days. An additional 60 days would allow consumers more time to gather multiple documents from multiple sources, and would allow time for back and forth review with the Exchange. The majority of households with income DMIs are comprised of consumers who are low income and often have multiple sources of employment that can change frequently. Therefore, collecting and submitting documentation to verify projected household income is extremely complicated and difficult.

While we recognize that it raises program integrity concerns to provide APTC for an additional 60 days to consumers who may ultimately be ineligible, we believe that these concerns are outweighed by the benefits of improved health care access and health equity, a stronger risk pool, and operational efficiency. The proposed extension would provide many consumers who are eligible for APTC with the necessary time to gather and submit sufficient documentation to verify their eligibility. The current authority allowing for the granting of extensions is applied on a case-by-case basis and requires the consumers to demonstrate difficulty before the 90-day deadline, which does not address the need for additional time more broadly for households with income DMIs.

A review of income DMI data indicates that when consumers receive additional time, they are more likely to successfully provide documentation to verify their projected household income. Between 2018 and 2021, over one third of consumers who resolved

[231] 42 U.S.C. 18081.

their income DMIs on the Exchange did so in more than 90 days. These consumers were provided additional time under § 155.315(f)(3), but the extension under this existing provision places the burden on the consumer to obtain more time to submit documentation. The proposed extension would treat consumers more equitably, take into consideration the complicated process of obtaining and submitting income documents for these households, and provide more opportunity for Exchanges to work with consumers to submit the correct documentation to verify their projected annual household income. We believe that this extension would provide consumers with these benefits because previous extensions enabled us to determine eligibility for more consumers who, after verifying their eligibility through the DMI process, were determined eligible for financial assistance. We continue to study consumer behavior in resolving inconsistencies to continue to support accurate eligibility determination.

We have found that income DMIs have a negative impact on access and health equity. Upon a review of PY 2022 data, income DMIs disproportionately impacted households with lower attested household income. Among households with an income DMI in PY 2022, approximately 60 percent attested to a household income of less than $25,000. In households without an income DMI, only about 40 percent attested to household income less than $25,000. Additionally, households with an attested household income below $25,000 successfully submitted documentation to verify their income 25 percent less often than households with higher household incomes. Income DMIs also may pose a strain on populations of color. A review of available data indicates that income DMI expirations are higher than expected among Black or African American consumers. The proposed changes would promote access to more affordable coverage by continuing APTC for many eligible consumers.

Consumers' challenges in submitting documentation to resolve income DMIs also negatively impact the risk pool. When households are unable to submit documentation to verify their household income and lose eligibility for APTC, they are much more likely to drop coverage since they must pay the entire monthly premium, which in many cases may be significantly more than the premium minus the APTC. We have found that consumers who were unable to submit sufficient documentation to verify their income and lost their eligibility for APTC were half as likely as other consumers to remain covered through the end of the plan year. Consumers aged 25–35 were the age group most likely to lose their APTC eligibility due to an income DMI, resulting in a loss of a population that, on average, has a lower health risk, thereby negatively impacting the risk pool.

Given the information we have on the negative and disproportionate impacts of income DMIs, we proposed to adjust the household income verification requirements to treat consumers more equitably, help ensure continuous coverage, and strengthen the risk pool. Exchanges would utilize only data from the IRS for the purpose of generating an income DMI, except for State Exchanges that are approved to utilize additional data sources as outlined earlier in this proposal, and Exchanges would accept attestation when tax return data is requested from IRS but not returned. In cases where the IRS returns tax data that reflects that the attested projected annual household income is not an accurate projection of the tax filer's household income, Exchanges would continue existing DMI generation and adjudication operations. Additionally, Exchanges would utilize the additional time provided to work with consumers to submit documentation to verify their projected annual household income.

While the increased protection for consumers from loss of eligibility for APTC could present a program integrity risk, households are required to provide accurate answers to application questions under penalty of perjury. We note that the program integrity risk applies to a limited group of consumers, namely those who misreport income and for whom IRS indicates that they have no income data after being contacted by HHS. Also, we do not believe that individuals for whom IRS cannot return income data due to situations such as family size change have a greater incentive to misreport income than their counterparts, given that changes in family size and other changes in circumstances are unlikely to be correlated with income misreporting incentives. We will continue to engage with partners to evaluate the impact of this proposal on the amount of APTC a household receives compared to the amount of PTC the household is eligible for when filing taxes.

After reviewing the public comments, we are finalizing these provisions as proposed. We summarize and respond below to public comments received on the proposed policies to accept household income attestation when the Exchange requests tax return data from the IRS to verify attested projected annual household income but the IRS confirms there is no such tax return data available and to provide an automatic 60-day extension for income DMIs.

Comment: Multiple commenters requested clarification on the usage of State data sources to resolve income inconsistencies, noting a desire to continue using those sources for that purpose.

Response: We agree that State Exchanges can continue to use the data sources that they currently use to verify income, and we have provided additional information in the preamble to explain when and how State Exchanges may use alternative data sources. Exchanges may only continue to use income data from other electronic data sources to verify income if income is not already verified by the IRS, or if IRS data is inconsistent with the projected annual household income, unless flexibility is granted and approved by HHS under § 155.315(h). This includes income sources that are available to State Exchanges that may not be available to other Exchanges, such as information maintained by State tax franchise boards or public benefit records.

Comment: Multiple commenters expressed program integrity concerns, as well as tax liability concerns for consumers, particularly for consumers who miscalculate their income.

Response: While data suggests that consumers have a high degree of ability to project their income and *HealthCare.gov* has made recent changes to further assist individuals in determining their projected income, we will continue to engage with State Exchanges, consumer advocates, and other external interested parties on how to increase the accuracy of consumer income attestation and subsequent APTC determination. Anticipated updates to promote program integrity include strengthening accurate income attestation and tax reconciliation language in existing consumer-facing materials. Although the program integrity risk applies to a limited group of consumers, namely those who misreport income and for whom IRS indicates that they have no income data after being contacted by HHS, we acknowledge the commenter's concerns on program integrity. It is our belief that the health care accessibility, health equity, risk pool, and operational efficiency benefits outlined in the preamble outweigh these concerns. Additionally, households are required to provide true answers to application questions under penalty of perjury.

Comment: Some commenters suggested asking the applicant for additional information on why an applicant projects their income a certain way, including why it has changed over time.

Response: We currently ask consumers for additional information in the application, such as the specific reason why their income may have changed with the opportunity to provide responses from a pull-down menu, including an option for additional information, and we use that information as part of our verification of a household's projected income. We have found that while sometimes the information provided is sufficient to verify household projected income, it often does not help thoroughly explain consumers' complicated income streams and household changes. Additionally, an applicant or enrollee may not know, and therefore may not be able to explain why a DMI is caused by a tax household composition change (such as birth, marriage, and divorce), name change, or other demographic updates or mismatch.

Comment: Multiple commenters stated that the 60-day extension was not necessary for all consumers and would slow down and burden the administrative process, and that the existing 90 days is sufficient. Some commenters proposed that we instead offer the 60-day extension on a case-by-case basis.

Response: We do not believe that 90 days is sufficient for many applicants. Applicants and enrollees often need to submit multiple documents to verify their projected household income, which is often difficult to do within 90 days, particularly for those in seasonal work or who are self-employed. When given extra time (as currently may be provided on a case-by-case basis under § 155.315(f)(3)), over one third of consumers resolve their income DMIs after 90 days, demonstrating that many consumers are able to provide the required information when they are given sufficient time to do so. Finally, the 90-day extension adjustment would likely not burden the administrative process as the additional time could facilitate more DMI resolutions, potentially leading to fewer appeals related to the adjustment or removal of financial assistance.

Comment: One commenter mentioned concerns about implementing the 60-day extension and requested flexibility on the implementation timeline for State Exchanges.

Response: While we acknowledge that this change will require implementation effort from the State Exchanges, we have decided not to provide flexibility on the implementation timeline for State Exchanges. As stated in the preamble, 90 days is often an insufficient amount of time for households to collect and submit documents to successfully verify their projected household income, and consumers who lose eligibility for financial assistance as a result of a failed income verification often drop coverage. We believe that this provision must be implemented in all Exchanges to account for the complicated process of submitting documentation. However, we will be available to conduct technical assistance to State Exchanges experiencing difficulty in implementing the extension.

Comment: One commenter noted that the existing income verification process is sufficient and that the existing document submission process is a small burden on consumers.

Response: We do not believe that the current income verification process is sufficient due to the negative impacts on health care access, health equity, the risk pool, and operational efficiency. Additionally, the existing document submission process is burdensome on consumers and time consuming, as they often have to obtain and submit multiple documents before their income inconsistency is resolved, particularly if they are self-employed or work seasonal jobs.

6. Annual Eligibility Redetermination (§ 155.335)

In the HHS Notice of Benefit and Payment Parameters for 2024 proposed rule (87 FR 78206, 78259), we proposed revising § 155.335(j) to allow the Exchange, beginning in PY 2024, to direct re-enrollment for enrollees who are eligible for CSRs in accordance with § 155.305(g) from a bronze QHP to a silver QHP with a lower or equivalent premium after APTC within the same product and QHP issuer, regardless of whether their current plan is available or not, if certain conditions are met (referred to here as the ''bronze to silver crosswalk policy''). We also proposed to amend the Exchange re-enrollment hierarchy to require all Exchanges (Exchanges on the Federal platform and State Exchanges) to ensure enrollees whose QHPs are no longer available to them and enrollees who would be re-enrolled into a silver-level QHP in order to receive income-based CSRs are re-enrolled into plans with the most similar network to the plan they had in the previous year, provided that certain conditions are met.

After reviewing public comments, we are finalizing these proposals with modifications. Specifically, we are amending the proposed regulations to clarify that Exchanges implementing the bronze to silver crosswalk policy will compare net monthly silver plan premiums for the future year with net monthly bronze plan premiums for the future year, as opposed to net monthly bronze plan premiums for the current year (where net monthly premium is the enrollee's responsible amount after applying APTC). For example, when determining whether to automatically re-enroll a 2023 bronze plan enrollee who is CSR-eligible into a silver plan for 2024, an Exchange will compare the net premium the enrollee would pay for the silver plan in 2024 with the net premium that they would pay for the bronze plan into which they would otherwise be auto re-enrolled in 2024, as opposed to the net premium the enrollee paid for their bronze plan in 2023. This clarification ensures that Exchanges will make auto re-enrollment determinations based on comparable premium information.

Additionally, we changed the structure and some content of the regulation to simplify the regulatory text and to more clearly explain that enrollees whose QHP is no longer available as described in paragraphs (j)(1) and (2) must be enrolled in a plan that has the most similar network compared to their current plan, whereas enrollees subject to the bronze to silver crosswalk policy under paragraph (j)(4) must be enrolled in a plan with the same network as the bronze plan they would have been auto re-enrolled in per requirements in paragraph (j)(1) or (2). We made these changes in part based on public comments indicating confusion about when an enrollee's issuer, provider network, and covered benefits will change as a result of the bronze to silver crosswalk policy, compared to the policy regarding network continuity for enrollees whose QHP is no longer available.

The restructured regulation language shifts the provisions related to the bronze to silver crosswalk policy into a new paragraph (j)(4) to distinguish this policy from other crosswalk scenarios. We also amended this language to clarify that, under the bronze to silver crosswalk policy, an Exchange may only auto re-enroll a bronze plan enrollee into a silver plan if there is a silver plan within the same product and with the same provider network as the bronze plan into which the enrollee would otherwise have been auto re-enrolled, with a net premium that does not exceed that of the bronze plan. In other words, the bronze to silver crosswalk policy will not result in enrollment into a plan for any enrollee that is in a

different product or that has a different provider network from the one the enrollee would have had absent this bronze to silver crosswalk policy. The restructured language deviates from the proposed rule as follows. Under the proposed rule (87 FR 78260), we proposed to require, with respect to all auto re-enrollments, including those under the bronze to silver crosswalk policy now described in paragraph (j)(4), that the future year silver plan's provider network be ''the most similar network compared to'' an enrollee's *current* bronze plan network because provider networks can change year-to-year within the same plan and product. We are finalizing this proposal only with respect to auto re-enrollments under paragraphs (j)(1) and (2). Specifically, we are finalizing that where an enrollee's plan is no longer available through the Exchange under § 155.335(j)(1)(ii) through (iv) and (j)(2), the Exchange will be required to compare the future year plan's provider network to the current year plan's network and take network similarity into account when auto re-enrolling enrollees whose current plan will no longer be available. However, we are also finalizing under § 155.335(j)(4), that the Exchange is permitted to compare the *future* year silver plan's provider network against the *future* year bronze plan's provider network (as opposed to the current year bronze plan's network as proposed), which is the plan and network that the enrollee would have been auto re-enrolled into absent the bronze to silver crosswalk policy, and the Exchange can select the silver plan only if the networks are identical. For example, a bronze plan enrollee who is auto re-enrolled into the same plan as their current plan will have a similar, but not necessarily identical, network to their current plan because provider networks may change from year-to-year. If crosswalked into a silver plan under the bronze to silver crosswalk policy at § 155.335(j)(4), the enrollee's future year silver plan network would be compared to the network of the future year bronze plan into which they would have been auto re-enrolled absent the policy at paragraph (j)(4), making for a same year comparison.

Accordingly, we are finalizing the policy to require Exchanges to take into account network similarity to current year plan when re-enrolling enrollees whose current year plans are no longer available, and to permit Exchanges to re-enroll enrollees under the bronze to silver crosswalk policy only if the future year silver plan has the same network that the future year bronze plan would have absent the bronze to silver crosswalk policy.

For PY 2024, we will implement both policies in Exchanges on the Federal platform by incorporating plan network ID into the auto re-enrollment process, while continuing to take into account enrollees' current year product.[232] We believe that plan network ID will be an effective method of network comparison for Exchanges on the Federal platform because if specific providers are in-network for some of an issuer's products but not others, the issuer must establish separate network IDs to enable mapping the plans to the applicable network IDs. We will also work closely with issuers and State regulators to ensure a mutual understanding of the information we will collect to facilitate smooth network data submission and review processes during the QHP Certification process. As further discussed in our responses to comments, we will also work with issuers and State regulators to learn how we may improve methods to analyze and ensure network continuity in future years. For example, Exchanges on the Federal platform will rely on issuer submissions through the existing crosswalk process, which, per § 155.335(j)(2), already requires that the issuer propose a plan for the future year that is in the product most similar to the current year product if no plans under the same product as an enrollee's current year QHP are available for renewal.[233] Based on internal analysis, in many cases we already re-enroll consumers in plans for the future year with the same network ID as their current year plan through this approach. However, for plan years starting in 2024, we will incorporate plan network ID into our analysis of crosswalk plan information that we receive from issuers, and permit them to submit justifications to HHS for review if they believe a different network ID in the following plan year has the most similar network to the enrollee's current QHP.[234]

We believe that these changes in the final rule will help distinguish between the enrollment procedures under the bronze to silver crosswalk policy and the procedures for when an enrollee's current QHP is no longer available.

Finally, we also made additional revisions for clarity and readability that do not substantively change the policy. For example, in certain instances we amended passive language to active language to specify that ''the Exchange will'' auto re-enroll current enrollees as opposed to stating that a consumer ''will be auto re-enrolled.'' We also updated rule language to include gender-neutral terms: specifically, changing instances of ''he or she'' to ''the enrollee.''

We summarize and respond below to public comments received on the automatic re-enrollment proposals in § 155.335(j).

Comment: Many commenters supported the bronze to silver crosswalk policy proposal, agreeing that it would help limit CSR forfeiture and increase the likelihood that more consumers would be enrolled in more generous coverage without additional cost. A number of commenters added that low-income consumers would be able to use the money that they saved for other crucial household expenses such as food and housing, and would have improved access to care at the same monthly premium. Commenters added that automatically re-enrolling low-income consumers into more generous plans for the same or lower monthly premium could be especially helpful for individuals and families who do not understand the need to actively re-enroll in coverage for a new plan year, those who find the plan compare and selection process especially burdensome, and those who originally enrolled in coverage prior to availability of more generous subsidies provided for in the American Rescue Plan Act of 2021 (ARP) and extended by the Inflation Reduction Act of 2022 (IRA).[235]

Commenters cited examples of similar auto re-enrollment practices that State Exchanges have implemented successfully, including the Massachusetts Health Connector's auto re-enrollment of about 2,000 enrollees into a silver plan for the 2023 plan year, and Covered California's auto re-enrollment of bronze enrollees with a household income no greater than 150 percent of the FPL into silver QHPs for PY 2022 and PY 2023. One commenter expressed support but suggested that the policy could be limited in its impact for individuals and families with household incomes above 150 percent FPL because of the difference in bronze and silver plans' monthly premiums.

[232] As discussed in the proposed rule (87 FR 78262), in situations where a non-CSR eligible enrollee would not be auto re-enrolled into their current QHP because it is no longer available, the existing auto re-enrollment process places them into a plan with the same product ID as their current QHP, if possible.

[233] *See* § 155.335(j)(2), and *see* ''Plan Crosswalk'' on the QHP Certification Information and Guidance website: *https://www.qhpcertification.cms.gov/s/Plan%20Crosswalk for more information on the Crosswalk Template.*

[234] *See* 87 FR 78261 through 78263.

[235] ARP, Public Law 117–2 (2021); IRA, Public Law 117–169 (2022).

Commenters generally agreed with the policy's prioritization of network and benefit continuity for consumers who are auto re-enrolled in a QHP that is different from their current QHP. One commenter appreciated that the proposal incorporated network into the bronze to silver crosswalk policy specifically because in their experience, enrollees who forgo a $0 net monthly premium silver plan with CSRs in favor of a $0 net monthly premium bronze plan (without the ability to use CSRs) do so in order to access a specific provider when they cannot afford the premiums for the silver plan(s) with networks that include the provider. One commenter asked that we clarify the re-enrollment hierarchy for consumers who are auto re-enrolled in a silver plan with CSRs but become ineligible for CSRs the following year.

Response: We agree that finalizing this proposal will help to ensure that additional enrollees are able to benefit from more generous coverage at a lower cost that provides the same benefits and provider network. We also agree that this may be especially beneficial for those who find the re-enrollment process confusing or who are unaware of the benefits of actively re-enrolling in coverage, though we will continue to help such consumers understand the plan comparison and selection processes. We appreciate evidence from State Exchanges of the success of similar practices, and will work with States to understand the impact of the policy moving forward. Because bronze plan premiums are generally lower than silver plan premiums, we agree with the comment that many enrollees who can benefit from the bronze to silver crosswalk policy under paragraph (j)(4) will be eligible for a silver plan with a $0 net monthly premium because their household income does not exceed 150 percent of FPL.[236] However, some enrollees with a household income greater than 150 percent of FPL may also qualify for a silver plan with a $0 net monthly premium, depending on the premiums of bronze and silver plans available to them, and so we will not limit this policy based on household income. We strongly agree with the importance of ensuring network continuity for re-enrollees as much as possible. The policy at § 155.335(j)(4) clarifies that those who are auto re-enrolled from a bronze to a silver plan will not experience network changes that they would not have experienced had they been auto re-enrolled into a bronze plan.

Finally, in response to the comment requesting clarity on the auto re-enrollment hierarchy for consumers who are auto re-enrolled in a silver plan with CSRs but become ineligible for CSRs the following year, we clarify that Exchanges will not be required to take into consideration when applying auto re-enrollment rules under § 155.335(j) whether an enrollee had previously been re-enrolled under the new rule at § 155.335(j)(4). That is, a CSR-eligible individual who is auto re-enrolled from a bronze to a silver plan for PY 2024 in accordance with paragraph (j)(4) and who does not return to select a plan for PY 2025, will be auto re-enrolled as otherwise provided for under § 155.335(j). However, we also note that we encourage all enrollees to return to the Exchange to update their application if they experience changes during the plan year, and an enrollee in a silver plan with CSRs who updates their application such that they are no longer CSR-eligible may qualify for a SEP to change to a plan that is one metal higher or lower.[237]

Comment: Some opposing commenters voiced concerns that the bronze to silver crosswalk proposal would cause consumer confusion, and they cautioned against interpreting consumer inaction as indifference. In particular, these commenters noted that consumers sometimes research their options and make a decision to allow themselves to be auto re-enrolled, without taking action on *HealthCare.gov.* These commenters also advocated for HHS to improve decision-making tools on *HealthCare.gov* instead of changing consumers' default plan selections. Opposing commenters also noted that consumers select plans for many reasons other than monthly premium amount, including provider network, benefit structure, and health savings account (HSA) eligibility, and raised the concern that auto re-enrolling some consumers from a bronze plan to a silver plan would disregard these consumer priorities.

Some commenters expressed concern that consumers who are auto re-enrolled into a silver plan could incur unexpected tax liability, including consumers aware of their auto re-enrollment, if their APTC amount was determined based on inaccurate household income for the future year, which is a particular risk for hourly workers. One commenter noted that bronze enrollees not using the entire amount of the APTC for which they qualify towards their premiums during the year have some protection against tax liability in the event of an unexpected increase in household income, and that they could lose this protection if an Exchange auto reenrolls them into a silver plan because the consumer would be likely to use more APTC to cover the higher monthly premium.[238] That is, an enrollee who experiences a household increase mid-year that they do not report to the Exchange, which results in eligibility for less PTC, may have a larger tax liability upon tax filing if they apply more APTC to a monthly silver plan premium than to a monthly bronze plan premium to off-set the higher premium.

Some opposing commenters asked that we delay this policy, if implemented, to conduct further research to ensure it honors consumer preferences and to provide interested parties with additional time to develop appropriate consumer messaging. A few commenters raised the concern that auto re-enrolling consumers into an alternate plan when their current plan remains available violates the guaranteed renewability requirements with which issuers must comply, and that the limited exceptions to these requirements do not include availability of a different plan with lower premiums or cost-sharing.

Response: We acknowledge that some consumers may choose not to take action during an open enrollment period with the expectation that they will be auto re-enrolled in their current

[236] Section 9661 of the ARP amended section 36B(b)(3)(A) of the Internal Revenue Code for tax years 2021 and 2022 to decrease the applicable percentages used to calculate the amount of household income a taxpayer is required to contribute to their second lowest cost silver plan, which generally result in increased PTC for PTC-eligible taxpayers. For those with household incomes no greater than 150 percent of the FPL, the new applicable percentage is zero, resulting in availability of one or more available silver-level plans with a net premium of $0, if the lowest or second-lowest cost silver plan covers only EHBs. The Inflation Reduction Act of 2022 extended these changes through tax year 2025.

[237] *See* § 155.420(a)(4)(ii)(B) and (d)(6)(i) and (ii)

[238] For example, assume an individual enrolls in a bronze plan and the enrollee's APTC covers the entire monthly premium for the plan based on projected household income at 150 percent of the FPL. Also assume, based on the enrollee's projected income, that APTC would have covered the entire amount of the enrollee's premium for a silver plan in the same product. If the enrollee's income as a percent of FPL ends up higher than projected, it is possible that the enrollee's benchmark plan premium minus the enrollee's contribution amount (that is, the maximum available premium assistance) would still be more than the bronze premium but less than the relevant silver plan premium. This would result in a tax liability with the silver plan, but not the bronze plan selection, in this case. (Note: ''contribution amount'' means the amount of a taxpayer's household income that the taxpayer would be responsible for paying as their share of premiums each month if they enrolled in the applicable second lowest-cost silver plan. *See* ''Terms You May Need To Know'' in Instructions for Form 8962: *https://www.irs.gov/pub/irs-pdf/i8962.pdf.*)

plan, and we anticipate updating current outreach on *HealthCare.gov* and elsewhere and providing technical assistance to promote understanding of these changes, and encourage State Exchanges to similarly educate their enrollees. Also, as discussed in the proposed rule,[239] income-based CSR-eligible enrollees in Exchanges on the Federal platform who may be auto re-enrolled under the bronze to silver crosswalk policy described in paragraph (j)(4) will receive a notice from the Exchange advising them that they will be re-enrolled into a silver plan if they do not make an active selection on or before December 15th. These enrollees would also see the silver plan highlighted in the online shopping experience if they return on or before December 15th to review their options.[240] Also, we agree that we should continue to work to improve decision-making tools on *HealthCare.gov;* however, we do not believe that that work is a substitute for auto re-enrolling certain consumers in a plan that will provide them with more generous coverage for a lower or equal premium.

In response to concerns that enrollees subject to the bronze to silver plan crosswalk policy will be auto re-enrolled into a plan with a different benefit structure and provider network, we note that the policy only applies for consumers who have access to a silver plan in their same product with a Network ID that matches that of their future year bronze plan, and therefore consumers will not experience network changes or benefit changes that they would not otherwise experience had they been auto re-enrolled into their bronze plan.

Also, we will perform additional research to ensure that we are able to provide appropriate support and technical assistance to enrollees who may have chosen a plan for its HSA eligibility. We also encourage State Exchanges, agents and brokers, and Assisters to work with these enrollees to ensure they can make informed decisions on this matter.

In terms of potential tax liability for repayment of APTC, we agree that it is important for Exchanges to take steps to ensure enrollees understand this possibility when applying APTC to premium payments in advance. We believe that consumer notices can help to ensure they do, and we already convey this information, because the existing auto re-enrollment process can re-enroll enrollees in a plan with a higher monthly premium than their current year plan due to annual increases in the cost of coverage, which can increase tax liability. For example, the current *HealthCare.gov* notice for consumers who were auto re-enrolled in coverage with financial assistance instructs enrollees to ''Keep your Marketplace application up to date,'' and explains that consumers must report changes in circumstance, including changes in household income, within 30 days to ''help make sure you get the right amount of financial help and don't owe money on your tax return because you got the wrong amount.'' This notice also explains that ''The full amount of tax credit that you qualify for is now being applied to your monthly premium,'' and provides instructions for enrollees who do not want to apply the full amount of APTC for which they qualify to their monthly premium payments.[241] State Exchanges should ensure their notices are similarly educational. These State Exchange notices will be reviewed and approved as part of HHS' annual review of State Exchanges alternative eligibility redetermination plans, as specified in § 155.335(a)(2)(iii).

Additionally, when calculating the difference in net premium between enrollees' bronze and silver plan options for the future year, for the auto re-enrollment process for Exchanges on the Federal platform, we will generally take into account the full amount of APTC for which enrollees may qualify. However, in cases where a consumer opted not to use any of their PTC in advance during the current plan year, in keeping with our existing auto re-enrollment practice for Exchanges on the Federal platform, we will maintain the enrollee's preference not to apply any APTC towards monthly premiums by not taking APTC into account when determining the difference between their monthly bronze and monthly silver premiums for the future year, and not automatically applying APTC to their future year monthly premiums.[242]

We also note that enrollees whose expected household income changes mid-year such that they no longer qualify for APTC or CSRs may be eligible for a SEP that allows them to change to a plan of a different metal level. For example, an enrollee whose household income increases such that they no longer qualify for CSRs can change from a silver plan to a bronze or gold plan, per § 155.420(d)(6)(i) or (ii). We believe that this SEP will help protect enrollees who experience changes in household income during the year from applying APTC in an amount that exceeds the PTC they are ultimately eligible to receive. Nevertheless, we will work closely with interested parties to promote understanding of potential tax liability for enrollees who are auto re-enrolled from a bronze to a silver plan under paragraph (j)(4). We will also work closely with State Exchanges that implement this policy to share best practices for doing so.

Given the benefits that this policy will provide to consumers who are enrolled in more generous coverage for no greater cost, we will not delay its effectuation. We will work closely with all interested parties to promote smooth implementation and mitigate consumer confusion.

Finally, as discussed in the proposed rule (87 FR 78262 through 78263), this proposal is consistent with the explanation of the guaranteed renewability provisions at § 147.106 provided in the 2014 Patient Protection and Affordable Care Act; Annual Eligibility Redeterminations for Exchange Participation and Insurance Affordability Programs; Health Insurance Issuer Standards Under the Affordable Care Act, Including Standards Related to Exchanges.[243] If a product remains available for renewal, including outside the Exchange, the issuer must renew the coverage within the product in which the enrollee is currently enrolled at the option of the enrollee, unless an exception to the guaranteed renewability requirements applies. However, to the extent the issuer is subject to § 155.335(j) with regard to an enrollee's coverage through the Exchange, the issuer must, subject to applicable State law regarding automatic re-enrollments, automatically enroll the enrollee in accordance with the re-enrollment hierarchy, even where that results in re-enrollment in a plan

[239] See 87 FR 78262.

[240] Enrollees who return to their *HealthCare.gov* account after December 15 will see the plan as their enrolled plan, and could choose a different plan until January 15 for coverage starting February 1.

[241] See Marketplace Automatic Enrollment Confirmation Messages (December 2022); automatic-enrollment-with-financial-help.pdf, at *https://marketplace.cms.gov/applications-and-forms/notices.*

[242] This operational practice is not an Exchange requirement. We share this information here as an example of how we plan to implement this policy to reflect enrollees' likely intentions. We also note that in cases where an enrollee who is auto re-enrolled opted to apply some, but not all, of their APTC toward monthly premiums during the current year, our current practice is to apply any additional APTC for which the enrollee qualifies to cover as much of the future year monthly premium as possible. We will continue this practice, including for enrollees who qualify for the bronze to silver crosswalk.

[243] See 87 FR 78262–78263 for this discussion.

under a product offered by the same QHP issuer through the Exchange that is different than the enrollee's current plan. Auto re-enrolling consumers under § 155.335(j)(4) will not result in the issuer violating the guaranteed renewability provisions at § 147.106 as long as the issuer gives the enrollee the option to renew coverage within their current product, including permitting the enrollee to actively re-enroll in their current year plan for the coming year if it remains available for renewal.

Comment: Some commenters supported the proposal to give States that operate their own Exchange platforms flexibility with whether to implement the policy described in final paragraph (j)(4), and requested confirmation that the final policy would provide such flexibility.

Response: We confirm that, as proposed, Exchanges have the option to implement the policy at § 155.335(j)(4). For example, an Exchange might choose not to implement this policy, or might choose to implement it for PY 2025 or a future plan year, instead of PY 2024. However, the rule requires all Exchanges to implement changes to the requirements under paragraphs (j)(1) and (2) for PY 2024.[244] We will work closely with Exchanges that request any related technical assistance regarding implementation of the auto re-enrollment hierarchy.

Additionally, we clarify that State regulatory authorities and Exchanges have the option to apply the bronze to silver crosswalk policy per § 155.335(j)(4) to the approach that they use for cross-issuer enrollments per § 155.335(j)(3)(i) and (ii). As noted in ''Section 5. Plan ID Crosswalk'' of Chapter 1 of the PY 2024 Draft Letter to Issuers, if this policy was finalized, we would modify the 2024 cross-issuer auto re-enrollment policy to take into account the other changes at § 155.335(j).[245] Specifically, in Exchanges on the Federal platform, when § 155.335(j)(3)(ii) is applicable, we will crosswalk enrollees in a bronze plan who are eligible for CSR in accordance with § 155.305(g), and who would otherwise be auto re-enrolled in a bronze plan, to a silver level QHP within the same product, with the same provider network, and with a net premium lower than or equivalent to that of the bronze level QHP into which the Exchange would otherwise re-enroll the enrollee under paragraph (j)(3). When § 155.335(j)(3)(i) is applicable, we will defer to the applicable State regulatory authority with regard to whether to incorporate the bronze to silver crosswalk policy into cross-issuer auto re-enrollment.

Comment: Some commenters supported using network ID to determine the most similar network for purposes of auto re-enrolling consumers, and one commenter noted that the Washington State Exchange already uses the network ID as a consideration when cross-walking enrollees from one plan to another. Several commenters urged that we work closely with States to better understand how networks differ based on ID, because States may use different practices for the assignment of network IDs. These commenters expressed concerns that overriding an enrollee's prior choice of plan level may create disruptions when networks are similar but not identical, and they asked that we be transparent in the reasons behind auto re-enrolling a consumer into a particular plan.

One commenter had concerns with using network ID as part of the plan crosswalk process because issuers are not required to use a distinct ID for each health maintenance organization (HMO), preferred provider organization (PPO), and exclusive provider organization (EPO) network type, which would make such comparisons incomplete, and added that network IDs would not fully explain potential differences in delivery systems or providers offered within the same issuer's products. Several commenters shared the concerns about preserving plan benefit structure for consumers who are not auto re-enrolled into their current plan. One commenter stated they supported the proposed policy only if enrollees were not moved to a different product.

Response: We appreciate the additional insight that commenters provided about how States and issuers currently use network IDs. Also, we note that, all changes to § 155.335(j) require Exchanges to continue to account for characteristics of enrollees' current product. As noted earlier, Exchanges on the Federal platform will implement the similar network policy and the bronze to silver crosswalk policy by incorporating network ID into existing requirements for issuer submissions through the crosswalk process, which, per existing rules at § 155.335(j)(2), already requires that if no plans under the same product as an enrollee's current QHP are available for renewal, the Exchange will auto re-enroll the enrollee in the product most similar to their current product with the same issuer.[246] As noted earlier in preamble for this section, we believe that plan network ID will be an effective method of network comparison for Exchanges on the Federal platform because QHP Certification Instructions specify that if specific providers are available for some of an issuer's products but not others, the issuer must establish separate Network IDs to enable mapping the plans to the applicable Network IDs. However, reiterating what we stated in the proposed rule, we will permit issuers to submit justifications for our review if they believe a different network ID in the following plan year is better suited as a crosswalk option for enrollees in a particular plan.[247] Further, we will collaborate with State regulators in States with FFEs and with SBE–FPs through regularly scheduled meetings and other methods to ensure clear and appropriate incorporation of network ID into the auto re-enrollment process. We will also work closely with State Exchanges to share best practices for implementing this policy. Finally, based on experience from past years, a majority of enrollees who were crosswalked into a different product with the same issuer had the same network ID and product type (for example, HMO, PPO), and so we anticipate that this policy will reinforce and not disrupt current auto re-enrollment processes.[248]

Comment: Some commenters raised concerns about how consumers who are auto re-enrolled from a bronze to a silver plan under paragraph (j)(4) would be notified by the Exchange and issuers. Commenters urged that we ensure that, if finalized, the new auto re-enrollment rule would require Exchanges and issuers to send notification of the plan change in time for consumers to make a plan selection if they choose, and that the notification include information about key characteristics of their new plan and the reasons they were auto re-enrolled into it. Some commenters raised concerns that consumers would be confused by content in the Federal Standard Renewal and Product Discontinuation Notices, which are required to include information about availability of the product in which a consumer is currently enrolled and could not include targeted information

[244] See § 155.335(j)(1)(ii) through (iv) and (j)(2).

[245] See *https://www.cms.gov/files/document/2024-draft-letter-issuers-508.pdf.*

[246] See § 155.335(j)(2), and *see* ''Plan Crosswalk'' on the QHP Certification Information and Guidance website: *https://www.qhpcertification.cms.gov/s/Plan%20Crosswalk* for more information on the Crosswalk Template.

[247] See 87 FR 78261 through 78263.

[248] Based on internal CMS analysis, for PY2023 86 percent of crosswalks to a different product with the same issuer had the same network ID and the same network type (that is, HMO, PPO, EPO).

about potential auto re-enrollment from bronze into a silver plan because issuers do not have access to enrollees' CSR eligibility.[249] One commenter asked whether issuers would be allowed more flexibility in terms of the content or the timing for mailing the Federal Standard Renewal and Product Discontinuation Notices to account for proposed re-enrollment changes. Multiple commenters asked that we provide consumers who are auto re-enrolled from a bronze to a silver plan under paragraph (j)(4) with a SEP to allow them time after their coverage takes effect to change plans if they find that the plan's network does not include a provider that they need or the coverage does not work well for them in some other way.

Response: As discussed in this rule and in the proposed rule,[250] income-based CSR-eligible enrollees in Exchanges on the Federal platform who may be auto re-enrolled from a bronze to a silver plan under paragraph (j)(4) will receive messaging from the Exchange advising them that they will be re-enrolled into a silver plan if they do not make an active selection on or before December 15th, and that they can see the silver plan highlighted in the online shopping experience on *HealthCare.gov* until December 15th. Further, enrollees in Exchanges on the Federal platform who do not make an active selection on or before December 15th will receive an additional communication from the Exchange after December 15th reminding them of their new plan enrollment for January 1st, and that they can select a different plan by January 15th that would be effective starting February 1st. We believe that State Exchanges also have practices in place to notify consumers of important changes to their enrollment, and that State Exchanges' flexibility in terms of whether or not to implement the bronze to silver crosswalk policy, or to implement it in a future plan year, allows State Exchanges additional time to further develop consumer noticing timing and content in advance of implementation.

In response to comments on the Federal Standard Renewal and Product Discontinuation Notices, we note that issuers are required to use the Federal standard notices developed by HHS, unless a State develops and requires the use of a different form consistent with HHS guidance, in which case issuers in that State are required to use notices in the form and manner specified by the State. Because issuers are not permitted to make modifications to the Federal standard notices, we do not believe it is necessary to provide additional flexibility regarding timing of the notices.[251] We are updating the Federal standard notices currently approved under OMB control number 0938–1254 (Annual Eligibility Redetermination, Product Discontinuation and Renewal Notices) and we intend to include language related to the re-enrollment hierarchy finalized in this rule in the Federal standard notices as part of that process.

In addition, nothing under Federal law prevents an issuer from providing additional information, outside of the standard notices, to an enrollee about their re-enrollment options. Also, we will work closely with issuers in Exchanges on the Federal platform to coordinate and develop strategies to mitigate potential consumer confusion. We will also work with State Exchanges that choose to implement the bronze to silver crosswalk policy in plan year 2024 or in future years to share information on best practices to help ensure smooth transitions for impacted consumers.

Finally, as discussed in the proposed rule,[252] we did not propose, and therefore are not finalizing, any changes to SEP eligibility or duration in connection with the proposed changes at § 155.335(j). As the proposed rule[253] also explained, enrollees qualify for a loss of MEC SEP under § 155.420(d)(1)(i) when their current product is no longer available for renewal, but not when their current product is still available, even if they are auto re-enrolled from a bronze QHP to a silver QHP within the same product. Therefore, enrollees who are auto re-enrolled under § 155.335(j)(2), which applies when an enrollee's product is no longer available, may qualify for a loss of MEC SEP, but enrollees auto re-enrolled under § 155.335(j)(1) or (4) will not. Finally, while we agree that a SEP plays an important role in ensuring that consumers with a change in circumstance can update their coverage accordingly, we do not believe that a SEP is necessary in this case because consumers who are auto re-enrolled into a silver plan will have the same network as if they had instead been auto re-enrolled into a bronze plan absent the bronze to silver crosswalk policy. Further, notifications before and after auto re-enrollment provide them with the information that they need to choose a different plan during open enrollment if desired.

In the HHS Notice of Benefit and Payment Parameters for 2024 proposed rule (87 FR 78263–78264), HHS requested information on potential future changes to the auto re-enrollment hierarchy. We thank commenters for their feedback and will take comments into consideration in future rulemaking.

7. Special Enrollment Periods (§ 155.420)

a. Use of Special Enrollment Periods by Enrollees

In the HHS Notice of Benefit and Payment Parameters for 2024 proposed rule (87 FR 78206, 78264), we proposed two technical corrections to § 155.420(a)(4)(ii)(A) and (B) to align the text with § 155.420(d)(6)(i) and (ii). The proposed revisions clarified that only one person in a tax household applying for coverage or financial assistance through the Exchange must qualify for a SEP under paragraphs (d)(6)(i) and (ii) for the entire household to qualify for the SEP.

After reviewing the public comments, we are finalizing this provision as proposed, with a modification to use gender neutral language. We also note a correction, that any member of a household, rather than any member of a *tax* household as previously stated in preamble, can trigger this SEP for the household. We summarize and respond to public comments received on the proposed technical corrections below.

Comment: All commenters strongly supported the proposed technical corrections. Commenters noted that this change supports the inclusion of households with different family structures and/or access to affordable insurance options, which is especially important for consumers moving from Medicaid or CHIP to Exchange coverage. Commenters also stated that the proposal will reduce administrative burden and potential confusion for households applying for coverage or financial assistance with a SEP. One

[249] See Updated Federal Standard Renewal and Product Discontinuation Notices in the Individual Market (Required For Notices Provided In Connection With Coverage Beginning In The 2021 Plan Year) OMB Control No.: 0938–1254, *https://www.cms.gov/CCIIO/Resources/Regulations-and-Guidance/Downloads/Updated-Federal-Standard-Notices-for-coverage-beginning-in-the-2021-plan-year.pdf.*

[250] See 87 FR 78262.

[251] Non-grandfathered, non-transitional plans must provide renewal notices before the first day of the next annual open enrollment period. In prior years, HHS has provided an enforcement safe harbor under which the agency will not take enforcement action against an issuer for failing to provide a product discontinuation notice with respect to individual market coverage at least 90 days prior to the discontinuation, as long as the issuer provides such notice consistent with the timeframes applicable to renewal notices. We anticipate providing similar relief for PY 2024.

[252] See 87 FR 78263.

[253] 87 FR 78263.

commenter also asked that we clarify that any member of a household, rather than any member of a tax household as stated in preamble to the proposed rule (87 FR 78264 through 78265), must qualify for a SEP under paragraphs (d)(6)(i) and (ii) for the entire household to qualify for the SEP.

Response: We agree that the proposed technical corrections support different types of household compositions and that it will reduce both administrative burden and confusion for consumers, which is especially important during Medicaid unwinding. We also wish to clarify that any member of a household (as opposed to a tax household) must qualify for a SEP under paragraphs (d)(6)(i) and (ii) for the entire household to qualify for the SEP.

b. Effective Dates for Qualified Individuals Losing Other Minimum Essential Coverage (§ 155.420(b))

We proposed amendments to the coverage effective date rules at § 155.420(b)(2)(iv) to permit Exchanges the option to offer earlier coverage effective start dates for consumers attesting to a future loss of MEC under paragraph (d)(1), and also the SEPs at paragraphs (d)(6)(iii) and (d)(15), as the eligibility for these SEPs also require that the loss of coverage be considered MEC. Doing so could mitigate coverage gaps when consumers lose forms of MEC (other than Exchange coverage) mid-month and allow for more seamless transitions from other coverage to Exchange coverage. We were aware that consumers may face gaps in coverage because current coverage effective date rules do not allow for retroactive or mid-month coverage effective dates for consumers whose other coverage ends mid-month. Under current rules, the earliest start date for Exchange coverage under the loss of MEC SEP is the first day of the month following the date of loss of MEC. We were aware in the proposed rule (87 FR 78265) that in some States, Medicaid or CHIP is regularly terminated mid-month, so we solicited input on whether the proposed change would help consumers, especially those impacted by Medicaid unwinding, to seamlessly transition from another form of MEC to Exchange coverage.

Consumers losing MEC, such as coverage through an employer, Medicaid, or CHIP, already qualify for a SEP under § 155.420(d)(1), (d)(6)(iii), and (d)(15) and may report a loss of MEC to Exchanges and select a QHP up to 60 days before or 60 days after their loss of MEC. Exchanges must generally provide a regular coverage effective date as described in § 155.420(b)(1): for a QHP selection received by the Exchange between the 1st and the 15th day of any month, the Exchange must ensure a coverage effective date of the 1st day of the following month; and for a QHP selection received by the Exchange between the 16th and the last day of any month, the Exchange must ensure a coverage effective date of the 1st day of the second following month. However, Exchanges must provide special coverage effective dates for certain SEP types including loss of MEC, as described in § 155.420(b)(2), and may elect to provide coverage effective dates earlier than those specified in § 155.420(b)(1) and (2), as described in § 155.420(b)(3). The loss of MEC coverage effective dates are generally governed by § 155.420(b)(2)(iv). Currently, for all Exchanges, consumers who report a future loss of MEC and select a plan on or before the loss of MEC are provided an Exchange coverage effective date of the 1st of the month after the date of loss of MEC, under § 155.420(b)(2)(iv). For example, if a consumer reports on June 1st that they will lose MEC on July 15th and they make a plan selection on or before July 15th, Exchange coverage will be effective August 1st. The consumer in this case cannot avoid a gap in coverage of more than 2 weeks.

For consumers reporting a loss of MEC that occurred up to 60 days in the past, Exchanges must ensure that coverage is effective in accordance with § 155.420(b)(1) (the regular coverage effective dates described above) [254] through a cross reference from § 155.420(b)(2)(iv). Alternatively, Exchanges can offer prospective coverage effective dates so that coverage is effective the first of the month following plan selection, at the option of the Exchange. *See* § 155.420(b)(2)(iv). For example, if a consumer reports on July 1st a past loss of MEC that occurred on June 30th and selects a plan on July 15th, Exchange coverage is effective August 1st. This option has been selected for Exchanges on the Federal platform. *See* § 155.420(b)(3)(i).

Because current regulation at § 155.420(b)(2)(iv) does not allow for retroactive or mid-month coverage effective dates, consumers who lose MEC mid-month, including consumers who live in States that allow mid-month terminations of Medicaid or CHIP coverage, may experience a gap in coverage when transitioning to coverage through the Exchange. During Medicaid unwinding, we expect to see a higher than usual volume of individuals transitioning from Medicaid and CHIP coverage to the Exchange from April 1, 2023, through May 31, 2024, as States resume Medicaid and CHIP terminations that have been paused due to the Medicaid continuous enrollment condition. Consumers who become ineligible for Medicaid or CHIP are at risk of being uninsured for a period of time and postponing use of health care services, which can lead to poorer health outcomes, if they are not able to successfully transition between coverage programs without coverage gaps.

Therefore, to ensure that qualifying individuals whose prior MEC ends mid-month are able to seamlessly transition from their prior coverage to Exchange coverage as quickly as possible with no coverage gaps, we proposed revisions to paragraph (b)(2)(iv). Specifically, we proposed to add additional language to paragraph (b)(2)(iv) stating that if a qualified individual, enrollee, or dependent, as applicable, loses coverage as described in paragraph (d)(1), experiences a change in eligibility for APTC per paragraph (d)(6)(iii), or experiences a loss of government contribution or subsidy per paragraph (d)(15), and if the plan selection is made on or before the day of the triggering event, the Exchange must ensure that the coverage effective date is the first day of the month following the date of the triggering event (as currently required under paragraph (b)(2)(iv)) and, at the option of the Exchange, if the plan selection is made on or before the last day of the month preceding the triggering event, the Exchange must ensure that coverage is effective on the first day of the month in which the triggering event occurs. For example, if a consumer attests between May 16th and June 30th that they will lose MEC on July 15th and selects a plan on or before June 30th, coverage would be effective on August 1st (first of the month after the loss of MEC), or at the option of the Exchange, on July 1st (the first day of the month in which the triggering event occurs).

We acknowledged in the proposed rule (87 FR 78265 through 78266) that this proposed change may have a limited impact because many types of coverage typically do not have end dates in the middle of the month. However, for those that it does impact, the proposed change would provide earlier access to coverage and APTC and CSR. Under the current rule at paragraph (b)(2)(iv), consumers reporting a future loss of MEC may have to wait weeks for their coverage to start, even if they were

[254] For example, if a consumer selects a plan on May 2nd, coverage will be effective June 1st, if a consumer selects a plan on May 16th, coverage will be effective July 1st.

proactive and attested to a coverage loss as soon as they became aware. We noted in the proposed rule (87 FR 78265 through 78266) that we did not believe that this proposed change introduces program integrity concerns because these concerns would apply to only a very narrow group of consumers, specifically: those who report a future loss of MEC within their 60-day reporting window, have been determined eligible for a SEP and found eligible for an Exchange QHP, and select a plan on or before the last day of the month preceding the loss of MEC.

We stated in the proposed rule (87 FR 78266) that we believed this proposal would provide additional flexibilities for Exchanges, as Exchanges would have the option to use the current coverage effective dates available under current paragraph (b)(2)(iv) and provide earlier coverage effective dates for consumers who attest to a future mid-month loss of MEC. We also acknowledged that if Exchanges do elect an earlier coverage effective date as we proposed, this would result in some consumers paying for both an Exchange QHP and their other MEC for a short period of dual enrollment.

We also stated in the proposed rule that the partial-month period of dual enrollment would not bar an enrollee from eligibility for APTC or CSRs, if otherwise eligible, because PTC would be allowed for such month under 26 CFR 1.36B–3(a).[255] Under this provision, PTC is the sum of the premium assistance amounts for each coverage month, and a month in which an individual is eligible for MEC for only a portion of the month may be a coverage month for the individual. We sought comment on whether Exchange regulations at § 155.305(f) should be revised to reference the IRS's definition of a coverage month to clarify that a consumer who is eligible and enrolled in non-Exchange MEC for only a portion of the month is not prohibited from receiving APTC.

We also stated in the proposed rule (87 FR 78266) that we believed consumers in States that permit mid-month terminations of Medicaid or CHIP coverage would be most impacted by the proposed change. We sought comment from interested parties on the frequency of mid-month coverage end dates, potential program integrity issues associated with earlier effective dates, and instances when the expedited effective date would or would not mitigate coverage gaps or introduce coordination of benefits issues.

Under § 147.104(b)(5), applicable to health insurance issuers that offer health insurance coverage in the individual, small group, or large group market in a State, coverage elected during limited open enrollment periods and SEPs described in § 147.104(b)(2) and (3) must become effective consistent with the dates described in § 155.420(b).[256] Therefore, with the exception of the triggering event in § 155.420(d)(6), which is limited to coverage purchased through an Exchange, the proposed changes to the effective date for future loss of MEC would be effective for individual market coverage purchased off an Exchange, as well as for coverage purchased through an Exchange. For individual market coverage offered outside of an Exchange, the proposed option of the Exchange to specify the effective date would refer to an option of the applicable State authority.

While we also considered proposing retroactive coverage effective dates for consumers reporting past loss of MEC, we decided in the proposed rule (87 FR 78266) to limit these proposed changes to future loss of MEC to avoid adverse selection and reduce burden on Exchanges, States, and issuers, as allowing for retroactive coverage start dates can be operationally complex for Exchanges to implement and for issuers to process. Also, we noted that we believed the proposed changes would limit the financial burden on consumers, as consumers who report a loss of MEC in the past 60 days may not want or be able to afford to pay past premiums to effectuate coverage retroactively. While we also considered providing mid-month coverage effective dates for consumers who lose MEC mid-month, this would have limited the affordability of coverage given that IRS regulations at 26 CFR 1.36B–3 generally provide that PTC is only allowed for a month when, as of the first day of the month, the individual is enrolled in a QHP. We sought comment on additional regulatory changes that would improve transitions to Exchange coverage and minimize periods of uninsurance for consumers who report a loss of MEC to the Exchange.

We sought comment on these proposals.

After reviewing the public comments, we are finalizing this provision as proposed, with a modification to section § 155.305(f)(1)(ii)(B) to state that a tax filer must be determined eligible for APTC if the tax filer (or a member of their tax household) is not eligible for a full calendar month of MEC (and other criteria are met). We summarize and respond to public comments received on the proposed policy to permit Exchanges the option to provide earlier coverage effective dates for consumers attesting to a future loss of coverage below.

Comment: The majority of commenters expressed their support for the proposal, explaining that the proposal would help ensure consumers, especially those with HIV or cancer, continue to have access to medical care without interruption. Commenters stated that the proposal would help consumers maintain adherence to treatment, including access to certain prescription drugs, which are a critical component of most cancer treatment plans. Several commenters also explained that it is important to align Exchange QHP coverage effective dates with Medicaid or CHIP termination dates, and that the immediate enactment of the proposal is especially important as it will help with coverage transitions from Medicaid or CHIP into other forms of coverage, such as Exchange coverage, during the Medicaid unwinding period. Other commenters said that they supported the flexibility provided to the State Exchanges to implement this proposal and urged HHS to keep this proposal at the option of Exchanges.

Response: We agree that this proposal will have a positive impact by preventing some consumers losing MEC from experiencing gaps in coverage or an inability to access treatment or prescription drugs. We agree with the commenter of the importance of aligning Medicaid or CHIP coverage mid-month terminations with Exchange QHP effective dates; however, we wish to clarify that the intent of this policy is not to align Exchange coverage effective dates with Medicaid of CHIP mid-month terminations, but rather to provide consumers reporting a future loss of MEC with earlier coverage effective dates to ensure continuity of coverage. We also agree that the proposal will help further ensure during Medicaid unwinding that consumers transitioning from Medicaid or CHIP into individual coverage on or off the Exchange are able to maintain continuity of coverage. Finally, we agree that State Exchanges should have flexibility to implement the proposed changes or not, based on their specific enrolled populations.

Comment: Some commenters supported the proposal, but had various

[255] Under section 1412(c)(2) of the ACA, APTC cannot be paid for a month if PTC is not allowed for such month under the Code section 36B.

[256] With the exception that, under § 147.104(b)(2), a health insurance issuer in the individual market is not required to allow enrollment for certain SEPs, including § 155.420(d)(6), with respect to coverage offered outside of an Exchange.

concerns and recommendations for HHS regarding coverage effective dates and adverse selection. One commenter urged HHS to make this proposal mandatory for all Exchanges, while another commenter recommended that HHS modify the proposal so that Exchanges give the consumer the option to choose an earlier or later Exchange coverage effective date to mitigate any complexities related to overlapping coverage. Also due to adverse selection risk, some commenters recommended that HHS should finalize this policy only in States that allow mid-month terminations of Medicaid or CHIP coverage or put into place guardrails for when consumers can select these coverage effective dates in cases of retroactive enrollments. One commenter supported the policy but shared a concern that the proposal may still result in continuity of care issues and that HHS should allow coverage effective dates to be closer to the loss of MEC date, such as through mid-month coverage effective dates. A few commenters also said that HHS should not make any changes to allow mid-month or retroactive coverage effective dates due to adverse selection risks.

Response: We appreciate the concerns raised by commenters regarding the proposed changes. We considered making this proposal required for all Exchanges, however, we believe that Exchanges should continue to have flexibility and authority to determine if allowing earlier coverage effective dates would benefit their enrolled populations. If an Exchange operates in a State that allows mid-month terminations of Medicaid or CHIP coverage, that Exchange may want to allow earlier coverage effective dates for consumers attesting to a future loss of MEC, whereas this change may not be necessary for an Exchange that operates in a State that does not allow mid-month terminations of Medicaid or CHIP. We rejected the idea to implement this policy only in States that allow mid-month terminations of Medicaid or CHIP because, due to the demands that both Exchanges and States will face during Medicaid unwinding, we believe that States should have the option whether or not to devote resources to implement earlier coverage effective dates for consumers attesting to a future loss of coverage in PY 2023 or 2024. Additionally, we wish to note that there is still the possibility that consumers lose non-Medicaid or CHIP coverage mid-month, such as COBRA coverage. Therefore, limiting this policy only to States that have mid-month Medicaid or CHIP termination dates would be too restrictive.

We also considered whether consumers should be able to select their own coverage effective dates when selecting a plan but determined this would be operationally complex for Exchanges and issuers to implement. Exchanges would have to implement application and logic changes to permit consumers to select their own coverage effective date through new application questions, as well as a way for consumers to reverse their decision in cases of error. Nonetheless, we are preserving in the final rule some element of consumer choice, as a consumer who knows they will be losing MEC in the future still has the option to select a plan after the last day of the month preceding the triggering event to be subject to the existing coverage effective date rules.

We also took into consideration operational complexities for both Exchanges and issuers of allowing coverage to start retroactively. Retroactive coverage would also require application and logic changes, and could impact QHP pricing across all Exchanges. Given these considerations and the complexities around offering retroactivity, we are not finalizing any changes to allow retroactivity for the loss of MEC SEP.

Regarding the comment that we allow QHP coverage to start as close as possible to the last day of coverage, we currently lack the authority to permit APTC and CSRs to start mid-month and elected not to allow consumers to enroll in a QHP mid-month if they could not be eligible for APTC or CSRs. IRS regulation at 26 CFR 1.36B–3(c) provides that a consumer may only qualify for PTC during a given month if they are enrolled in QHP ''as of the first day of the month'' (providing an exception only for births and adoptions, and certain other circumstances at 26 CFR 1.36B 3(c)(2)). If we were to begin QHP coverage mid-month without APTC and CSR, enrolling in Exchange coverage might be cost prohibitive for some consumers which may dissuade them from enrolling in Exchange coverage at all. Additionally, in the Exchanges on the Federal platform, a consumer who did enroll in a QHP (without APTC or CSRs) mid-month would need to update their Exchange application after the beginning of the month following their loss of MEC to be determined eligible for APTC and CSRs going forward (if otherwise eligible). This process would be difficult to message and burdensome for consumers.

Finally, we acknowledge the concerns raised by commenters regarding the potential risk for adverse selection, however, we believe the risk to be low because we are not proposing that coverage may start retroactively or that consumers have the option to select their preferred coverage start date. Given these concerns and our belief that Exchanges should retain flexibility in whether to offer the option for earlier coverage effective dates for consumers attesting to a future coverage loss, we are finalizing as proposed.

Comment: A commenter supported the proposal but stated that the proposed policy only provides seamless coverage transitions for consumers who proactively come to an Exchange to report their future loss of Medicaid or CHIP the month before their termination. The commenter requested that we consider additional improvements to notices to ensure that Medicaid and CHIP beneficiaries receive clear instructions about coverage transitions.

Response: We agree with the need for clear and effective communications with Medicaid and CHIP beneficiaries and wish to share some of the work we have done. In partnership with States and other interested parties, we have developed toolkits and strategies that States can implement to support Medicaid unwinding activities to inform consumers about renewing their coverage and exploring other available health insurance options if they no longer qualify for Medicaid or CHIP. The resources emphasize the need for consumers to act quickly to enroll in Exchange coverage so they are able to minimize gaps in coverage, where possible.[257]

Comment: One commenter supported the proposal, but also requested that HHS maintain the existing special enrollment flexibilities that were introduced after COVID–19 was declared a PHE by the President on March 13, 2020, including the Exceptional Circumstances SEP for consumers who lost qualifying health coverage on or after January 1, 2020, but missed their 60-day window after their loss of coverage to enroll in an Exchange plan due to the COVID–19 PHE. Other commenters supported the proposal and HHS' recent announcement of the Unwinding SEP,[258] which temporarily

[257] More information about these efforts is available at *https://www.medicaid.gov/state-resource-center/downloads/mac-learning-collaboratives/ffm-transfer-message-lc-presentation-deck.pdf.*

[258] See CMS. (2023, January 27). *Temporary Special Enrollment Period (SEP) for Consumers*

Continued

provides more time for consumers to report losing Medicaid or CHIP coverage during Medicaid unwinding, but recommended HHS also require this Unwinding SEP for issuers offering plans in the individual and group health insurance markets off-Exchange.

Response: In 2018, we clarified through guidance that an Exceptional Circumstances SEP pursuant to 45 CFR 155.420(d)(9) is available for individuals seeking coverage on Exchanges on the Federal platform and who were prevented from enrolling in Exchange coverage during another SEP or during an Open Enrollment period (OEP) by an event that Federal Emergency Management Agency (FEMA) declared a national emergency or major disaster (FEMA SEP).[259] This guidance also clarified that we would make a FEMA SEP available for only 60 days after the date in which a national emergency or major disaster officially ends.[260] Given the recent end of the COVID national emergency on April 10, 2023, the current SEP flexibilities due to the COVID–19 FEMA national emergency will only be in place until June 9, 2023.

We appreciate the recommendation that the Unwinding SEP be available off-Exchange. However, as specified in 45 CFR 147.104(b)(2)(i)(D), issuers in the individual market off-Exchange are not required to provide Exceptional Circumstances SEPs under § 155.420(d)(9).[261] In addition, the Exceptional Circumstances SEP does not extend to issuers offering group health insurance coverage outside of the Exchange.[262] As such, issuers in the individual and group market off-Exchange are not required to offer an Exceptional Circumstances SEP to help with coverage transitions due to Medicaid unwinding. Finally, while the Unwinding SEP does not apply to issuers in the individual and group health markets off-Exchange, employers may still work with their plan or issuer to extend the SEP available to consumers losing Medicaid or CHIP for those who need to enroll in employer sponsored coverage after the end of the 60-day loss of MEC SEP available under applicable law.

Comment: A few commenters neither fully supported or opposed the proposed policy but provided some considerations for HHS, specifically that the proposal could result in consumers enrolling in a new plan earlier than they intended to or were aware of. Commenters also recommended that HHS consider whether it could result in confusion or misunderstandings among consumers as to when coverage would begin, which could have financial implications or lead to issues with billing and premium payments. Another commenter noted that the proposed change could result in short periods of dual enrollment for consumers, which may introduce coordination of benefits issues for consumers.

Response: We agree that both consumers and issuers will require additional guidance to ensure that the policy is implemented as intended and that all interested parties assisting consumers with enrollment decisions receive education and guidance, especially regarding coordination of benefits and potential periods of overlapping coverage. Because the earlier coverage effective date will only be available when consumers select a QHP in advance of the month in which they are losing MEC, consumers who do not want any overlap in coverage could choose to wait until the month they lose MEC (and up to 60 days after the loss of MEC) before selecting a plan. We encourage any Exchanges choosing to implement earlier effective dates to provide clear explanations to consumers regarding this option. We will continue to monitor the implementation of this policy, including whether additional guidance, or any additional policy changes in future rulemaking, are necessary.

Comment: One commenter fully opposed the proposed policy, stating that it could further complicate the Medicaid unwinding process, especially in light of recent guidance published by HHS on January 27, 2023, announcing flexibilities for consumers losing Medicaid or CHIP due to Medicaid unwinding.[263] The commenter stated that a more narrowly tailored approach, such as allowing mid-month enrollments in Exchange QHPs and proration of APTC and premium amounts, similar to the SEPs for adoption or birth of a child, is the better solution.

Response: We appreciate and understand the concern that this policy could further complicate the Medicaid unwinding process given that there is variability amongst States' unwinding plans and activities. However, we do believe that the policy still has value given that it would facilitate timely coverage transitions, which will be critical throughout the entire Medicaid unwinding period. For example, consumers who reside in States that allow mid-month terminations of Medicaid or CHIP risk gaps in coverage during Medicaid unwinding. A rule that allows for earlier QHP effective dates could mitigate these gaps in coverage, even more so if consumers do not have access to the flexibilities we announced on January 27, 2023, because their State Exchange opted to not provide the Unwinding SEP or something similar. Regarding the suggestion to allow Exchange QHP coverage to start mid-month, we also considered and rejected this option for the reasons described earlier in this final rule.

Comment: A commenter supported a review of the regulations to ensure that consumers with MEC ending mid-month can be found eligible for an earlier coverage effective date not just for QHP, but also for APTC and CSR to help pay for their coverage.

Response: We reiterate that a consumer who is not eligible for or enrolled in non-Exchange MEC for a full month, and who is enrolled in a QHP on the first day of such month, may be allowed PTC under 26 CFR 1.36B–3(c)(1). To clarify that such a consumer may be eligible for APTC and CSRs, we are adding language to the APTC eligibility regulation at § 155.305(f)(1)(ii)(B) to state that a tax filer must be determined eligible for APTC if the tax filer (or a member of their tax household) is not eligible for a full calendar month of minimum essential coverage (and other criteria are met).

Losing Medicaid or the Children's Health Insurance Program (CHIP) Coverage Due to Unwinding of the Medicaid Continuous Enrollment Condition—Frequently Asked Questions (FAQ). https://www.cms.gov/technical-assistance-resources/temp-sep-unwinding-faq.pdf.

[259] See Pate, R. (2018, August 9). *Emergency and Major Disaster Declarations by the Federal Emergency Management Agency (FEMA)—Special Enrollment Periods (SEPs), Termination of Coverage, and Payment Deadline Flexibilities, Effective August 9, 2018. https://www.cms.gov/CCIIO/Resources/Regulations-and-Guidance/Downloads/8-9-natural-disaster-SEP.pdf.*

[260] *https://www.cms.gov/CCIIO/Resources/Regulations-and-Guidance/Downloads/8-9-natural-disaster-SEP.pdf.*

[261] See CMS. (2023, January 27). *Temporary Special Enrollment Period (SEP) for Consumers Losing Medicaid or the Children's Health Insurance Program (CHIP) Coverage Due to Unwinding of the Medicaid Continuous Enrollment Condition—Frequently Asked Questions (FAQ). https://www.cms.gov/technical-assistance-resources/temp-sep-unwinding-faq.pdf.*

[262] QHP issuers offering a QHP through a Small Business Health Options Program (SHOP) are required to provide the exceptional circumstances special enrollment period. 45 CFR 156.286.

[263] See CMS. (2023, January 27). *Temporary Special Enrollment Period (SEP) for Consumers Losing Medicaid or the Children's Health Insurance Program (CHIP) Coverage Due to Unwinding of the Medicaid Continuous Enrollment Condition—Frequently Asked Questions (FAQ). https://www.cms.gov/technical-assistance-resources/temp-sep-unwinding-faq.pdf.*

c. Special Rule for Loss of Medicaid or CHIP Coverage (§ 155.420(c))

To mitigate coverage gaps when consumers lose Medicaid or CHIP coverage and to allow for a more seamless transition into Exchange coverage, we are finalizing the proposed new special rule under § 155.420(c)(6) to provide more time for consumers who lose Medicaid or CHIP coverage that is considered MEC as described in § 155.420(d)(1)(i) to report their loss of coverage and enroll in Exchange coverage. The proposed regulation would align the SEP window following loss of Medicaid or CHIP with the reconsideration period available under 42 CFR 435.916(a).

Currently, qualified individuals or their dependents who lose MEC, such as coverage through an employer or most kinds of Medicaid or CHIP, qualify for a SEP under § 155.420(d)(1)(i) and may report a loss of MEC to Exchanges up to 60 days before and up to 60 days after their loss of MEC. *See* 45 CFR 155.420(c)(2). When these qualified individuals or their dependents are not renewed into Medicaid or CHIP based on modified adjusted gross income following an eligibility redetermination, 42 CFR 435.916 requires that the State Medicaid agency provide a 90-day reconsideration window, or a longer period elected by the State, which allows former beneficiaries to provide the necessary information to their State Medicaid agency to re-establish their eligibility for Medicaid or CHIP without having to complete a new application. During the 90 days (or longer period elected by the State) following a Medicaid or CHIP non-renewal, it would be reasonable for a consumer who becomes uninsured to proceed first by attempting to regain coverage through Medicaid or CHIP. However, because the SEP for loss of MEC at § 155.420(d)(1)(i) currently lasts only 60 days after the loss of Medicaid or CHIP coverage, by the time that a consumer exhausts their attempt to renew coverage through Medicaid or CHIP (which they must do within 90 days or the longer period elected by a State of the consumer's loss of Medicaid or CHIP), they may have missed their window to enroll in Exchange coverage through a SEP based on loss of MEC (60 days after loss of Medicaid or CHIP).

In further support of this proposal, we explained in the proposed rule (87 FR 78266 through 78267) that we are aware that most consumers losing Medicaid or CHIP and who are also eligible for Exchange coverage may not transition to Exchange coverage in a timely manner. A recent report published by the Medicaid and CHIP Payment and Access Commission (MACPAC) [264] found that only about three percent of beneficiaries who were disenrolled from Medicaid or CHIP in 2018 enrolled in Exchange coverage within 12 months. The 2018 data also showed that more than 70 percent of adults and children moving from Medicaid to Exchange coverage had gaps in coverage for an average of about three months.[265] While there are likely several reasons that consumers did not transition directly from Medicaid or CHIP coverage to Exchange coverage in 2018, the proposed special rule at § 155.420(c)(6) has the potential to mitigate an administrative hurdle that may pose a barrier to enrolling in Exchange coverage in a timely manner while minimizing coverage gaps.

Therefore, to ensure that qualifying individuals are able to seamlessly transition from Medicaid or CHIP coverage to Exchange coverage as quickly as possible and to mitigate the risk of coverage gaps, we proposed to create new paragraph (c)(6) stating that, effective January 1, 2024, at the option of the Exchange, consumers eligible for a SEP under § 155.420(d)(1)(i) due to loss of Medicaid or CHIP coverage that is considered MEC would have up to 90 days (or the longer period elected by a State) after their loss of Medicaid or CHIP coverage to enroll in an Exchange QHP. This proposal would align the SEP window following loss of Medicaid or CHIP with the reconsideration period available under 42 CFR 435.916(a). We also proposed adding language to paragraph (c)(2) to clarify that a qualified individual or their dependent(s) who is described in paragraph (d)(1)(i) continues to have 60 days after the triggering event to select a QHP unless an Exchange exercises the option proposed in new paragraph (c)(6). We believed in the proposed rule (87 FR 78267) that these proposed changes would have a positive impact on consumers while providing flexibility for Exchanges with different enrollment trends.

We sought comment on this proposal.

After reviewing the public comments, we are finalizing this provision as proposed, with two modifications to permit State Exchanges some additional flexibilities. As finalized, State Exchanges are permitted to provide a qualified individual or their dependent(s) who are losing Medicaid or CHIP coverage with more time to select a QHP, up to the number of days provided for the applicable Medicaid or CHIP reconsideration period if the State Medicaid Agency allows or provides a longer Medicaid or CHIP reconsideration period. State Exchanges will also have the option to implement this special rule as soon as this final rule takes effect, instead of on January 1, 2024, as proposed. We summarize and respond to public comments received on the proposed special rule for consumers losing Medicaid or CHIP coverage below.

Comment: Multiple commenters supported the proposal stating that, even before the COVID–19 PHE, many Medicaid beneficiaries experienced churn due to administrative errors, lost paperwork, and address changes. Commenters noted that despite States' best efforts during Medicaid unwinding, notices may still not reach consumers in time. Commenters also supported the proposal because it would promote continuity of care, which helps consumers achieve healthier outcomes, helps support the emergency care safety net, and minimizes care disruptions, especially for those with serious, chronic medical conditions. Commenters also were supportive of the flexibility for State Exchanges to determine whether they will adopt the special rule or not.

Response: We agree that the new special rule will have a significant impact and will be beneficial for consumers losing Medicaid or CHIP coverage, especially those with chronic health conditions, and will help ease transitions into Exchange coverage. We also agree that State Exchanges should have flexibility to decide whether to offer this special rule or not.

Comment: A few commenters supported the proposal but made recommendations for HHS to consider. A few commenters requested that HHS make this special rule mandatory instead of at the option of Exchanges. A few commenters requested that HHS not delay implementation to January 1, 2024, and requested that this special rule go into effect immediately or that Exchanges be given explicit authority to offer this special rule before January 1, 2024, if desired. Other commenters asked that HHS consider extending the window to 120 days or to permit Exchanges to extend the attestation window in States where the Medicaid or CHIP reconsideration period is longer than 90 days. Finally, a few commenters said that HHS should clarify that, under 45 CFR 155.420(d)(9), Exchanges already have flexibility to offer Exceptional Circumstance SEPs, can

[264] Medicaid and CHIP Payment Access Commission. (2022, July). *Transitions Between Medicaid, CHIP, and Exchange Coverage. https://www.macpac.gov/wp-content/uploads/2022/07/Coverage-transitions-issue-brief.pdf.*

[265] Ibid.

establish Exceptional Circumstance SEPs at any time and/or length, and that these lengths can be greater than the 60 or 90-day timeframes as discussed in preamble.

Response: We continue to believe that all Exchanges should have flexibility to adopt this special rule or not, based on their experiences with their eligible and enrolled populations. Therefore, we are not requiring that all Exchanges offer this special rule but we may consider this in future rulemaking. We believe that delaying implementation until January 1, 2024, will give Exchanges time to prepare any system changes for implementation, and update guidance and educational materials, which may not be feasible when States are also engaged in Medicaid unwinding activities. However, we understand that some Exchanges may be ready to implement this special rule earlier than January 1, 2024, and therefore, we are modifying our proposal to provide State Exchanges the flexibility to implement this policy as soon as this rule is finalized. Finally, we understand and appreciate States' concerns that the proposed 90-day window for consumers to report a past loss of Medicaid or CHIP is not enough time in States whose State Medicaid agency allow or provide for a Medicaid or CHIP reconsideration window that is 90 days or greater. Given these concerns, we are modifying our proposal to permit Exchanges to offer an attestation window (for consumers eligible for a SEP under § 155.420(d)(1)(i) due to loss of Medicaid or CHIP coverage that is considered MEC) up to the number of days provided for the applicable Medicaid or CHIP reconsideration period, if the State Medicaid agency allows or provides for a Medicaid or CHIP reconsideration period greater than 90 days.

Regarding the comment that Exchanges already have flexibility and authority under paragraph (d)(9) to set the length of a SEP, we remind Exchanges that the exceptional circumstances authority is subject to each Exchange's reasonable interpretation of what is ''exceptional.'' A misalignment between the Exchange attestation window for consumers losing Medicaid or CHIP coverage with the Medicaid or CHIP reconsideration period alone does not alone constitute an exceptional circumstance. If an Exchange chooses not to adopt this special rule for consumers losing Medicaid or CHIP coverage, or if an Exchange receives a request from an applicant to enroll in Exchange coverage more than 90 days after losing Medicaid or CHIP coverage, an Exchange could consider that applicant's claim that they experienced an exceptional circumstance that prevented them from enrolling in Exchange coverage in a timely manner on a case-by-case basis only. We also remind commenters that while Exchanges have broad authority to establish a SEP due to an exceptional circumstance, the Exceptional Circumstance SEP may not last more than 60 days, consistent with 45 CFR 155.420(c)(1). Therefore, we are finalizing as proposed.

Comment: One commenter supported the proposed special rule but also recommended that HHS continue to implement other changes to enrollment rules to reduce burden on consumers looking to enroll in Exchanges to make it more likely that they enroll. For example, the commenter suggested offering a SEP to consumers who owe a monthly premium after application of APTC, so that they can enroll in Exchange coverage throughout the year, similar to the SEP at § 155.420(d)(16) for consumers with attested household incomes at or below 150 percent of the FPL. The commenter also recommended that HHS consider other SEPs once the 150 percent FPL SEP expires at the end of coverage year 2025. Finally, one commenter supported automatic coverage transitions for consumers needing to transition from Medicaid or CHIP into Exchange coverage.

Response: We appreciate the commenters' concerns regarding consumers who have low incomes but are ineligible for the SEP at paragraph (d)(16). While any changes to the existing SEP at paragraph (d)(16) are out-of-scope for this rule, we will continue to explore potential ways to help lower income consumers access and enroll in Exchange coverage. We also appreciate the concerns regarding the need for automatic coverage transitions and will continue work with internal and external interested parties to find ways to improve transitions for consumers.

Comment: Some commenters also expressed concern about the recently announced Unwinding SEP available for consumers who submit a new application or update an existing application between March 31, 2023, and July 31, 2024, and attest to a last date of Medicaid or CHIP coverage within the same time period.[266] Commenters were concerned that the Unwinding SEP could invite adverse selection, as impacted consumers may delay enrolling into Exchange coverage until they have a medical need for health insurance, and because the Unwinding SEP is not subject to SEP verification. Commenters also said that they did not anticipate the announcement of the Unwinding SEP so that they could determine how the Unwinding SEP will impact their 2024 pricing.

Response: The recently announced Unwinding SEP[267] is out of scope for this rulemaking, but we acknowledge and appreciate the concerns raised by commenters related to potential adverse selection and impact on pricing of premiums.

Comment: A few commenters opposed the proposed special rule. One commenter contended that it was unnecessary given that the Consolidated Appropriations Act, 2023[268] delinked the Medicaid unwinding from the end of the COVID–19 PHE. Specifically, the commenter said that ''beginning April 1, 2023, States can begin Medicaid redeterminations'' and because of this, the commenter expects that ''many individuals impacted by this will have been redirected to coverage on the Exchange by the end of 2023.'' Another commenter stated that the existing SEP at § 155.420(d)(1) adequately addresses the situation, and expressed concern that HHS is introducing too many new SEPs, which can cause too much variation amongst Exchanges and may create more confusion within and across markets. The commenter also stated that enrollment data shows that consumers submit their applications early during their 60-day SEP window, and that lengthy, overlapping SEPs create more administrative burden for Exchanges and may cause delays or prevent consumers from enrolling into coverage.

Response: While there may not be a need for this special rule during Medicaid unwinding due to our recent announcement of the Unwinding SEP, the Unwinding SEP is only temporary and will not address the misalignment of the loss of MEC SEP eligibility period and Medicaid and CHIP reconsideration periods outside of the exceptional circumstances of Medicaid unwinding. We proposed this change due to

[266] See CMS. (2023, January 27). *Temporary Special Enrollment Period (SEP) for Consumers Losing Medicaid or the Children's Health Insurance Program (CHIP) Coverage Due to Unwinding of the Medicaid Continuous Enrollment Condition—Frequently Asked Questions (FAQ). https://www.cms.gov/technical-assistance-resources/temp-sep-unwinding-faq.pdf.*

[267] See CMS. (2023, January 27). *Temporary Special Enrollment Period (SEP) for Consumers Losing Medicaid or the Children's Health Insurance Program (CHIP) Coverage Due to Unwinding of the Medicaid Continuous Enrollment Condition—Frequently Asked Questions (FAQ). https://www.cms.gov/technical-assistance-resources/temp-sep-unwinding-faq.pdf.*

[268] Public Law 117–328.

continued concerns from interested parties that consumers transitioning from Medicaid or CHIP coverage and into other coverage, like Exchange coverage, continue to experience gaps in coverage, which can be detrimental to health outcomes. We also appreciate the concern that different rules for SEPs may be confusing, and therefore, Exchanges have the option of whether or not to offer this special rule.

d. Plan Display Error Special Enrollment Periods (§ 155.420(d))

We are finalizing our proposal to amend § 155.420(d)(12) to align the policy of the Exchanges for granting SEPs to persons who are adversely affected by a plan display error with current plan display error SEP operations. We proposed amending paragraph (d)(12) by changing the subject of the regulation to focus on the affected enrollment, not the affected qualified individual, enrollee, or their dependents.[269]

In accordance with § 155.420, SEPs allow a qualified individual, enrollee, and/or their dependents who experiences certain qualifying events to enroll in, or change enrollment in, a QHP through the Exchange outside of the annual OEP. In 2016, we added warnings on *HealthCare.gov* about inappropriate use of SEPs, and tightened certain eligibility rules.[270] We sought comment on these issues in the Patient Protection and Affordable Care Act; HHS Notice of Benefit and Payment Parameters for 2018 proposed rule (81 FR 61456), especially on data that could help distinguish misuse of SEPs from low take-up of SEPs among healthier eligible individuals; evidence on the impact of eligibility verification approaches, including pre-enrollment verification, on health insurance enrollment, continuity of coverage, and risk pools (whether in the Exchange or other contexts); and input on what SEP-related policy or outreach changes could help strengthen risk pools. We examined attrition rates in our enrollment data and have found that the attrition rate for any particular cohort is no different at the end of the year than at points earlier in the year, suggesting that any such gaming, if it is occurring, does not appear to be occurring at sufficient scale to produce statistically measurable effects.

In the Patient Protection and Affordable Care Act; HHS Notice of Benefit and Payment Parameters for 2018; Amendments to Special Enrollment Periods and the Consumer Operated and Oriented Plan Program (81 FR 94058, 94127 through 94129), we codified the plan display error SEP at § 155.420(d)(12) to reflect that plan display error SEP may be triggered when a qualified individual or enrollee, or their dependent, adequately demonstrates to the Exchange that a material error related to plan benefits, service area, or premium (hereinafter ''plan display error'') influenced the qualified individual's, enrollee's, or their dependents' decision to purchase a QHP through the Exchange. This generally allowed consumers who enrolled in a plan for which *HealthCare.gov* displayed incorrect plan benefits, service area, cost-sharing, or premium, and who could demonstrate that such incorrect information influenced their decision to purchase a QHP through the Exchange, to select a new plan that better suited their needs.

In the same final rule, we also finalized the policies at § 147.104(b)(2) to make clear that the plan display error SEP only creates an opportunity to enroll in coverage through the Exchange, and clarified that the SEP is limited to plan display errors presented to the consumer by the Exchange at the point at which the consumer enrolls in a QHP (81 FR 94128 through 94129). By this we meant that the consumer must have already completed their Exchange application, the Exchange must have determined that the consumer is eligible for QHP coverage and any applicable APTC or CSRs, and the consumer must have viewed the material error while making a final selection to enroll in the QHP.

Currently, § 155.420(d)(12) requires the qualified individual, enrollee, or their dependent, to adequately demonstrate to the Exchange that a material error related to plan benefits, service area, or premium influenced the qualified individual's or enrollee's, or their dependent's, decision to purchase a QHP through the Exchange. However, we have found that consumers may benefit when other interested parties can demonstrate to the Exchange that a material plan error influenced the qualified individual's, enrollee's, or their dependents' enrollment decision to purchase a QHP through the Exchange. In our experience, plan display errors may not be obvious or detectable to the consumer and the Exchange until after the enrollment has been impacted by the error, at which point the issuer or State regulator is in the best position first to identify the display error. For example, a plan display error that influenced a consumer's enrollment can be discovered when a consumer enrolls in a QHP, pays the premium amount that was submitted by the issuer to be displayed on *HealthCare.gov,* and the enrollment is cancelled by the issuer for non-payment of premiums because the premium was incorrectly displayed on *HealthCare.gov.* In this case, the plan display error would not be discovered until the issuer investigates the reason for cancellation. The issuer is the only party that can identify and notify the Exchange that the error was caused by incorrect premium amounts between the issuer's records and data submitted to *HealthCare.gov.* We can then work with the issuer to implement the data correction processes to make the necessary corrections to the *HealthCare.gov* and investigate the error to determine if the error was material because it was likely to have influenced the consumer's enrollment. In this example, we would likely determine that the error impacted the consumer's enrollment if the difference between the displayed premium and the actual premium was material. Issuers that submit a data change request that adversely impacts the consumers' enrollment on *HealthCare.gov* are required to notify consumers of the plan display error and the remediation.

Since qualified individuals, enrollees, and their dependents are not always the parties best suited to demonstrate to the Exchange that a material plan display has influenced their enrollment, we proposed revising paragraph (d)(12) to remove the burden solely from the qualified individual, enrollee, and their dependents. We also proposed adding cost-sharing to the list of plan display errors, alongside plan benefits, service area, and premiums, as a plan display error with respect to cost-sharing could equally influence a consumer's enrollment decision. Specifically, we proposed revising § 155.420(d)(12) to reflect that a SEP is available when the enrollment in a QHP through the Exchange was influenced by a material error related to plan benefits, cost-sharing, service area, or premium. We proposed to consider a material error to be an error that is likely to have influenced a qualified individual's, enrollee's, or their dependent's enrollment in a QHP.

We note that an error related to plan benefits, service area, cost-sharing or premium does not trigger a SEP when the error is not material, which may occur if an error is honored as displayed. Errors related to plan

[269] In this section, ''consumer'' may be used as shorthand for ''qualified individual, enrollee, or their dependents.''

[270] February 25, 2016. Fact Sheet: Special Enrollment Confirmation Process. Available online at *https://www.cms.gov/newsroom/fact-sheets/fact-sheet-special-enrollment-confirmation-process.*

benefits, service area, cost-sharing or premium include situations where coding on *HealthCare.gov* causes benefits to display incorrectly, or where we identified incorrect QHP data submission or discrepancy between an issuer's QHP data and its State-approved form filings.[271] If the error involves information that displays on *HealthCare.gov,* we work with the issuer and applicable State's regulatory authority to arrive at a solution that has minimal impact on consumers and affirms, to the extent possible, that they are not negatively affected by the error. Generally, the most straightforward and consumer-friendly resolution is for issuers to honor the benefit as it was displayed incorrectly for affected enrollees, if permitted by the applicable State regulatory authority. If the issuer chooses to honor the error and administers the plan as it was incorrectly displayed for the affected consumers, we will not typically provide the consumers with a SEP. The proposed revision to the regulation will be consistent with this approach.

Our proposal would have minimal operational impact, as interested parties currently have the infrastructure to demonstrate to the Exchange that a plan display error influenced a qualified individual's, enrollee's, or their dependents' decision to purchase a QHP through the Exchange. We currently engage with partners and interested parties throughout the plan display error SEP process to ensure that issuers and States are notified of our decisions as appropriate. States have access to the status of all applicable plan display error SEPs and can track the progress of the plan display error SEPs until remediation. In addition, under § 156.1256, issuers ''must notify their enrollees of material plan or benefit display errors and the enrollees' eligibility for an [SEP]. . . within 30 calendar days after being notified by the [FFE] that the error has been fixed, if directed to do so by the [FFE].'' Thus, impacted consumers are also currently being notified and made aware of plan display error SEP if their plan data had a significant, material error. We expected that this experience is similar on all Exchanges, and therefore are proposing that this amendment to the description of the SEP will apply for all Exchanges.

We requested comment on this proposal.

After reviewing the public comments, we are finalizing this provision as proposed. All comments supported the proposed policy. We summarize and respond to public comments received on the proposed plan display error SEP below.

Comment: Multiple commenters supported a SEP for consumers affected by a material plan display error related to plan benefits, service area, or premium. Specifically, commenters mentioned their support for the SEP for consumers whose enrollment in a plan was adversely affected by the material plan display error. Additionally, multiple commenters supported the proposal to add ''cost-sharing'' to the list of plan display error that includes material error related to plan benefits, service area, and premiums.

Response: We agree that this revised plan display error SEP will support consumers whose enrollment in a plan was influenced by a material plan display error related to plan benefits, service area, or premium. We also agree with adding cost-sharing to the list of errors that may constitute a plan display, and we are finalizing this as proposed.

Comment: Several commenters supported our proposal to lift the burden of proof to additionally allow regulators and other interested third parties to demonstrate that a plan display error affected a consumer's plan selection. One comment supported expanding the ways in which people can prove they have been affected by plan display errors. Commenters stated this proposed change encourages the efficient operations of the Exchanges while reducing the burden on consumers to prove an error occurred. Another commenter supported the proposal as it allows consumers to benefit from other interested parties recognizing a plan display error including issuers, State regulators, and others.

Response: We agree that the proposal will remove the burden from consumers to solely demonstrate to the Exchange that their enrollment was influenced by a material error. We agree that this change will lift the burden of proof to allow regulators and other interested parties to demonstrate plan display errors. As such, we will finalize this proposal to allow plan display errors to be efficiently identified and resolved.

In the HHS Notice of Benefit and Payment Parameters for 2024 proposed rule (87 FR 78268), HHS requested information on whether consumers affected by a significant change in their plan's provider network should be eligible for a SEP, and whether we should consider an enrollee who is impacted by a provider contract termination to be someone who is experiencing an exceptional circumstance, as specified in § 155.420(d)(9), or should be eligible for a new SEP for provider contract terminations. We thank commenters for their feedback and will take this into consideration in future rulemaking.

Comment: One commenter recommended that the plan display error SEP should also include provider directory inaccuracies.

Response: In the *Federally-facilitated Exchange (FFE) and Federally-facilitated Small Business Health Options Program (FF–SHOP) Enrollment Manual,* we state that plan display errors or changes that are made to external websites will not be considered triggering events for plan display error SEPs.[272] Since provider directories are displayed and maintained outside the Exchange, we did not propose in this rulemaking to include provider network inaccuracies as potential plan display error triggers under § 155.420(d)(12). Nonetheless, we will consider provider directory inaccuracies for future rulemaking.

8. Termination of Exchange Enrollment or Coverage (§ 155.430)

a. Prohibition of Mid-Plan Year Coverage Termination for Dependent Children Who Reach the Maximum Age

In the HHS Notice of Benefit and Payment Parameters for 2024 proposed rule (87 FR 78206, 78268), we proposed to add § 155.430(b)(3) to explicitly prohibit QHP issuers participating in Exchanges on the Federal platform from terminating coverage of dependent children before the end of the coverage year because the child has reached the maximum age at which issuers are required to make coverage available under Federal or State law. The ACA added PHS Act section 2714 (implemented at § 147.120) to require that group health plans and health insurance issuers offering group or individual health insurance coverage that offer dependent child coverage make such coverage available for an adult child until age 26. The ACA also added section 9815(a)(1) to the Code and section 715(a)(1) to the Employee Retirement Income Security Act (ERISA) to incorporate the provisions of part A of title XXVII of the PHS Act (including

[271] See the following: CMS. (2022, July 28). *2022 Federally-facilitated Exchange (FFE) and Federally-facilitated Small Business Health Options Program (FF–SHOP) Enrollment Manual.* (Section 6.8.1, p. 82). *https://www.cms.gov/files/document/ffeffshop-enrollment-manual-2022.pdf.*

[272] CMS. (2022, July 28). 2022 Federally-facilitated Exchange (FFE) and Federally-facilitated Small Business Health Options Program (FF–SHOP) Enrollment Manual. (Exhibit 12, pp. 33–37, and p. 87). *https://www.hhs.gov/guidance/document/2022-enrollment-manual.*

section 2714) and make them applicable under ERISA and the Code to group health plans and health insurance issuers providing health insurance coverage in connection with group health plans. This proposed amendment to § 155.430 would not change the requirements under § 147.120 nor would it affect parallel provisions in 26 CFR 54.9815–2714 and 2590.715–2714. Some States have established requirements under which issuers must maintain coverage for dependent children beyond age 26, and some issuers adopt higher than legally required age limits as a business decision.

In operationalizing § 155.430 on the Federal eligibility and enrollment platform, HHS has required QHP issuers that cover dependent children to provide coverage to dependent children until the end of the plan year in which they turn 26 (or, if higher, the maximum age under State law or the plan's business rules), although this is not required under § 147.120. Nevertheless, interested parties requested that HHS' policy be codified in regulation for clarity. Doing so by amending § 155.430 would reduce uncertainty for issuers on the Exchanges on the Federal platform regarding their obligation under § 155.430 to maintain coverage for a dependent child who has turned 26 (or, if higher, the maximum age under State law or the plan's business rules) until the end of the plan year (unless coverage is otherwise permitted to be terminated). Likewise, it would provide clarity for enrollees themselves who may be uncertain about the rules governing their ability to remain enrolled as a dependent child until the end of the plan year in which they reach the maximum age (that is, age 26 or, if higher, the maximum age under State law or the plan's business rules). This policy would codify the current policy on the Federal platform.

Payment of APTC on the Exchange, in addition to the way the Federal eligibility and enrollment platform has operationalized Exchange eligibility determinations, warrants a different policy for issuers of individual market QHPs on the Exchanges with regard to child dependents turning age 26 (or, if higher, the maximum age under State law or the plan's business rules). This is especially true when comparing individual market Exchange coverage to the employer market. In the employer market, the employer typically contributes toward the cost of child dependent coverage, but only until the child dependent attains the maximum dependent age under the group health plan (at which point the child dependent's coverage would typically be terminated). Whereas in the Exchange, APTC is allowed for the coverage of a 26-year-old child who is a tax dependent for the entire plan year because attaining age 26 may not, by itself, change tax dependent status. Exchange eligibility determinations for enrollment through the Exchange and for APTC are based on the tax household, and the determination is made for the entire plan year unless it is replaced by a new determination of eligibility, such as when a change is reported by the enrollee or identified by the Exchange in accordance with § 155.330. The annual basis of Exchange eligibility determinations, absent a new determination, is made clear by the annual eligibility redetermination requirements in § 155.335. Eligibility standards for enrollment through the Exchange and for APTC make no mention of an issuer's business rules regarding dependent relationships, or otherwise regarding the specific non-tax relationships between applicants. Additionally, Exchange eligibility criteria do not prohibit allocation of APTC to dependent children enrollees based on age. Every family member who is part of the tax household must be listed on the Exchange application for coverage, and there is no maximum age cap for tax dependents. Because eligibility determinations are made for the entire plan year, the Exchange will generally continue to pay the issuer APTC, including the portion attributable to the dependent child, through the end of the plan year in which the dependent child turns 26, or, if higher, through the end of the plan year in which the dependent reaches the maximum age required under State law or the plan's business rules.

In developing the Federal eligibility and enrollment platform, we directed QHP issuers on Exchanges that use the Federal platform to honor the eligibility determination made by the Exchange. This requirement applies whether or not the enrollees are determined eligible for APTC. The situation for issuers on these Exchanges thus differs from those in the off-Exchange insurance market, where enrollees do not receive APTC, and in the group insurance market, where contributions by employers may end on the day in which the dependent child turns 26 (or, if higher, the maximum age under State law or the plan's business rules).

To clarify, in Exchanges on the Federal platform, during the annual re-enrollment process, enrollees who, during the plan year, have reached age 26 (or, if higher, the maximum age under State law or the plan's business rules) are, if otherwise eligible, re-enrolled into a separate policy (following the re-enrollment hierarchy at § 155.335(j)) beginning January 1st of the following plan year, with APTC, if applicable. We proposed to add new paragraph (b)(3) to § 155.430 to expressly prohibit QHP issuers participating in Exchanges on the Federal platform from terminating coverage until the end of the plan year for dependent children because the dependent child has reached age 26 (or the maximum age under State law). This change would provide clarity to issuers participating in Exchanges on the Federal platform regarding their obligation to maintain coverage for dependent children, as well as to enrollees themselves regarding their ability to maintain coverage. In addition, we proposed to make implementation optional for State Exchanges.

We requested comments on this proposal.

After reviewing the public comments, we are finalizing this provision as proposed, with the additional clarification that issuers who have adopted a higher maximum age than required by State or Federal law, as described in their business rules, also must maintain coverage for dependent children until the end of the plan year in which they reach the maximum age. We summarize and respond to public comments received on the proposal below.

Comment: Multiple commenters supported the proposal, and none opposed it. Several commenters stated that this proposal would support continuity of coverage and avoid interruptions in coverage for dependent children who turn 26 during the plan year (or the maximum age under State law). A few commenters noted that this proposal was particularly important given health concerns faced by young people, such as reproductive health, and given the tendency of young adults to have lower rates of health insurance coverage. A few commenters agreed that the proposal would help provide clarity to issuers regarding their obligation to maintain coverage for dependent children until the end of the plan year in which the child turns 26 (or the maximum age under State law), and would clarify for dependent child enrollees their ability to remain enrolled until the end of the plan year in which they turn 26 (or the maximum age under State law). Three commenters, two of whom represented State Exchanges, indicated that their State has a similar requirement in place. One commenter noted that this proposal would align

with the insurance industry standard of enrollments taking place during the annual Open Enrollment Period. Lastly, two commenters stated that the proposal would ensure accumulators were not reset mid-plan year for enrollees who turn 26.

Response: We agree that these changes will help provide clarity to consumers and issuers regarding the obligation of issuers on Exchanges on the Federal platform to maintain coverage for dependent children until the end of the plan year in which they turn 26 (or, if higher, reach the maximum allowable age under State law or the plan's business rules). Although this policy has already been in place on these Exchanges, we agree that this requirement promotes continuity of coverage, ensures consumers maintain access to needed health services, and avoids the reset of accumulators that may occur if their coverage was terminated in the middle of the plan year.

Comment: One commenter supporting the proposal noted that implementation would be optional for State Exchanges and requested that we encourage States to adopt a policy of prohibiting mid-year plan terminations for dependent children who reach the applicable maximum age.

Response: This proposal provides State Exchanges with the option to adopt a similar policy, but we do not believe it is appropriate to explicitly encourage State Exchanges to do so. We note that this requirement applies to all issuers on Exchanges on the Federal platform, and as noted in a previous comment, some State Exchanges have also indicated they currently have a similar requirement. However, as noted in the preamble of this proposal, this policy for the Exchanges on the Federal platform is based on Exchange operations and the fact that APTC eligibility determinations are made for the entire plan year based on tax household, unless replaced by a new determination of eligibility. Because State Exchanges may establish their own operational practices regarding the maximum age for dependent enrollees, including ones that differ from those on the Exchanges on the Federal platform, we believe it is appropriate to allow State Exchanges to determine whether or not to adopt this proposal.

Comment: One commenter expressing support for the proposal stated that consumers should be informed that some States have higher maximum ages for dependent child enrollees, and that Federal law requires that individuals with developmental disabilities must be covered as insurance dependents regardless of age.

Response: We agree that it is important for consumers to be aware of the maximum age for dependent children required under State law and therefore will explore ways in which we can convey this information. With respect to plans with business rules that provide a maximum age higher than what is required under State or Federal law, we note that HHS publishes Public Use Files for the Federally-facilitated Exchange which contain information on issuers' business rules, including the maximum dependent age.[273] States, including State Departments of Insurance and State Exchanges, may also have resources available to inform consumers of the applicable laws regarding maximum age. Finally, we note that Federal law requires coverage of dependent children until age 26, though States may have higher maximum dependent ages based on disability status. The application for Exchanges on the Federal platform allows consumers to designate an enrollee with a disability, which allows that enrollee to remain enrolled as a dependent past age 26 if required by applicable State law.

Comment: Two commenters expressing support for the proposal noted that it was important for enrollees to retain APTC for the full plan year. One commenter stated that dependents may be eligible for more generous APTC while on their family's coverage than in coverage alone.

Response: We agree that it is important for Exchange enrollees to retain the APTC to which they are entitled for the full plan year. However, we note that even if a dependent enrollee enrolls in a separate plan prior to the end of the year in which the dependent turns 26, they are still entitled to the portion of APTC paid on their behalf for the tax household in which they are a tax dependent. Enrolling in a separate plan does not, in and of itself, reduce the amount of APTC to which an enrollee is entitled.

Comment: One commenter expressed neither support for nor opposition to the proposal and stated that enrollees who turn 26 during the plan year should not be automatically re-enrolled into their own plan at the end of the plan year.

Response: Although this comment is not within the scope of our proposal, we believe it is appropriate for such enrollees to be re-enrolled into their own plan at the end of the year in which they turn 26 (or, if higher, reach the maximum age under State law or the plan's business rules). This practice avoids disruptions of coverage for enrollees transitioning off their parents' plans, and is in line with the general Exchange practice of automatically re-enrolling enrollees at the end of each plan year.

9. General Eligibility Appeals Requirements (§ 155.505)

In the HHS Notice of Benefit and Payment Parameters for 2024 proposed rule (87 FR 78206, 78269), we proposed revising § 155.505(g) to acknowledge the ability of the CMS Administrator to review Exchange eligibility appeals decisions prior to judicial review. Section 155.505 describes the general Exchange eligibility appeals process, including applicants' and enrollees' right to appeal certain Exchange eligibility determinations specified in § 155.505(b), and the obligation of the HHS appeals entity and State Exchange appeals entities to conduct certain Exchange eligibility appeals as described in § 155.505(c). In accordance with § 155.505(g), appellants may seek judicial review of an Exchange eligibility appeal decision made by the HHS appeals entity and State Exchange appeals entities to the extent it is available by law. Currently, the regulation specifies no other administrative opportunities for appellants to appeal Exchange eligibility appeal decisions made by the HHS appeals entity. We proposed revising this regulation to acknowledge the ability of the CMS Administrator to review Exchange eligibility appeals decisions prior to judicial review.

This change would ensure that accountability for the decisions of the HHS appeals entity is vested in a principal officer, as well as bring § 155.505(g) of the appeals process to a more similar posture as other CMS appeals entities that provide Administrator review.[274] Revising the regulation would also provide appellants and other parties with accurate information about the availability of administrative review by

[273] CMS. (n.d.). *Health Insurance Exchange Public Use Files (Exchange PUFs). https://www.cms.gov/cciio/resources/data-resources/marketplace-puf.*

[274] Examples include: 42 CFR part 405, subpart R (Provider Reimbursement Review Board); 42 CFR part 412, subpart L (Medicare Geographic Classification Review Board); 42 CFR 430.60 through 430.104 (Medicaid State Plan Materials/Compliance Determinations); 42 CFR 423.890 (Retiree Drug Subsidy (RDS) Appeals); 42 CFR 411.120 through 411.124 (Group Health Plan Non-conformance Appeals); 42 CFR 417.640, 417.492. 417.500, 417.494 (Health Maintenance Organization Competitive Medical Plan (HMO/CMP) Contract Related Appeals); 42 CFR 423.2345 (Termination of Discount Program Agreement Appeals).

the CMS Administrator if they are dissatisfied with their Exchange eligibility appeal decision.

We sought comment on this proposal.

After reviewing the public comments, we are finalizing this provision as proposed, with the following technical corrections to improve understanding of the review process, and with a modified effective date. The first technical correction is to the proposed language at § 155.505(g). We are modifying the sentence at § 155.505(g) including its citation to paragraph (b) to clarify that review is available for Exchange eligibility appeals decisions issued by an impartial official under § 155.535(c)(4). The second technical correction is to change the reference found in § 155.505(g)(1)(i)(A) from paragraph (g)(1)(ii)(B) to paragraph (g)(1)(ii)(B)(*1*) to add specificity regarding voiding the Administrator's declination. The third technical correction is to § 155.505(g)(1)(i)(C), which should cross reference the 30-day period described in paragraphs (g)(1)(i)(B)(*1*) and (*3*). The fourth is to § 155.505(g)(1)(ii)(C), which should cross reference the 30-day period described in paragraphs (g)(1)(ii)(B)(*1*) and (*3*). The fifth technical correction is to § 155.505(g)(1)(iii)(A), which should cross-reference Exchange eligibility appeal decisions final pursuant to paragraphs (g)(1)(i)(C) and (g)(1)(ii)(C) in this section.

With respect to the effective date, under the proposed rule, any finalized changes to § 155.505 would be effective 60 days after the date of display of the final rule in the **Federal Register**. While this rule acknowledges the ability of the CMS Administrator to review Exchange eligibility appeals decisions prior to judicial review, we anticipate implementation of the proposed process to apply this authority will take some time. Therefore, we are finalizing this rule with the new process becoming available for eligibility appeal decisions issued on or after January 1, 2024.

We summarize and respond to public comments received on the proposed changes acknowledging the ability of the CMS Administrator to review Exchange appeals decisions below.

Comment: Some commenters expressed support for the proposed changes, acknowledging the ability of the CMS Administrator to review Exchange eligibility appeals decisions prior to judicial review. One commenter cautioned that we should work to make sure that the correct decision is made at the lowest level of review.

Response: We will continue to make every effort to ensure the correctness of the initial decision.

Comment: Two commenters sought clarity around how the proposed administrative review process would interact with the State Exchange second-tier eligibility appeal process, with one commenter expressing concern that the additional level of review may be duplicative and burdensome, adding further time before a decision can be implemented.

Response: We acknowledge the concerns around an additional level of review, but reiterate the existing ability of the CMS Administrator to review Exchange eligibility appeals decisions prior to judicial review. The proposed regulation also describes timeframes for the CMS Administrator to review, and for parties to the appeal to request the CMS Administrator review, an Exchange eligibility appeal decision, which is intended to balance the right of CMS Administrator to review a decision with the appellant's desire for finality of an Exchange eligibility appeal. We recognize that the Exchange should implement the correct decision as expeditiously as feasible and set the timeframes in the regulation to achieve that goal. We also clarify that the CMS Administrator may review the HHS appeals entity's decision with respect to a second-tier appeal of a State Exchange appeals entity's decision, but cannot review a decision of a State Exchange appeals entity.

Comment: A commenter sought clarity around the interaction between the administrative review process and the timeliness standards prescribed under § 155.545(b).

Response: The administrative review process will not affect the requirement under § 155.545(b) that the HHS appeals entity must issue written notice of the appeal decision to the appellant within 90 days of the date an appeal request is received, as administratively feasible. Parties have 14 days to request, and the CMS Administrator has 14 days to determine whether to conduct, an administrative review. Once either of these actions occurs, the CMS Administrator's review will occur within 30 days of the date a party requests review or the CMS Administrator determines to review a case. The total additional time for administrative review may add up to 44 days before the eligibility appeal decision becomes final.

10. Improper Payment Pre-Testing and Assessment (IPPTA) for State-Based Exchanges (§§ 155.1500 Through 155.1515)

In the HHS Notice of Benefit and Payment Parameters for 2024 proposed rule (87 FR 78206, 78270–72), we proposed to establish the IPPTA, an improper payment measurement program of APTC, that would include State Exchanges. As proposed, the IPPTA would prepare State Exchanges for the planned measurement of improper payments of APTC, test processes and procedures that support our review of determinations of APTC made by State Exchanges, and provide a mechanism for us and State Exchanges to share information that will aid in developing an efficient measurement process. We proposed to codify the IPPTA requirements in a new subpart P under 45 CFR part 155.

The Payment Integrity Information Act of 2019 (PIIA) [275] requires Federal agencies to annually identify, review, measure, and report on the programs they administer that are considered susceptible to significant improper payments. We determined that APTC are susceptible to significant improper payments and are subject to additional oversight. In accordance with 45 CFR part 155, FFEs, SBE–FPs, and State Exchanges that operate their own eligibility and enrollment systems determine the amount of APTC to be paid to qualified applicants. Only improper payments of APTC made by FFE and SBE–FPs were measured and reported in the FY22 Annual Financial Report (AFR) as part of the Exchange Improper Payment Measurement (EIPM) program. We stated in the 2023 Payment Notice proposed rule (87 FR 654, 654–655) that we were in the planning phase of establishing a State-based Exchange Improper Payment Measurement (SEIPM) program. We also stated in the 2023 Payment Notice proposed rule that we had intended to implement the proposed SEIPM program beginning with the 2023 benefit year. In response to that proposed rule, we received several comments that indicated concerns with the proposed requirements, particularly with respect to the SEIPM program's implementation timeline and proposed data collection processes. For example, some State Exchanges commented that they needed more time and information from us to prepare for the implementation of the SEIPM program. We decided not to finalize the proposed rule due to commenters' concerns surrounding the proposed implementation timeline and other burdens that would be imposed by the proposed SEIPM program (87 FR 27281). In the 2024 Payment Notice proposed rule (87 FR 78206, 78270), we proposed IPPTA to provide State Exchanges with more time to prepare for the planned measurement of improper

[275] PIIA, 31 U.S.C. 3352 (2020).

payments of APTC, to test processes and procedures that support our review of determinations of APTC made by State Exchanges, and to provide a mechanism for HHS and State Exchanges to share information that will aid in developing an efficient measurement process (87 FR 28270).

In 2019, we developed an initiative to provide the State Exchanges with an opportunity to voluntarily engage with us to prepare for future measurement of improper payments of APTC. We provided three options to State Exchanges—program analysis, program design, and piloting—designed to accommodate the State Exchanges' schedules and availability to participate in the initiative. Currently, of the 18 State Exchanges, 10 have participated in various levels of voluntary State engagement, and of those, 2 have participated in the piloting option.

We stated in the proposed rule that IPPTA would replace the voluntary State engagement. We explained that, if finalized, activities already completed by State Exchanges as part of the voluntary State engagement may be used to satisfy elements of IPPTA. We have determined that participation from all State Exchanges is required to test processes and procedures to prepare the State Exchanges for the planned measurement of improper payments of APTC.

We proposed to establish a new subpart P under 45 CFR part 155 (containing §§ 155.1500 through 155.1515) to codify the proposed IPPTA requirements. We explained that the proposed regulations at subpart P would be applicable beginning in 2024 with each State Exchange being selected to participate for a period of one calendar year which would occur either in 2024 or 2025.

After reviewing public comments, we are finalizing our proposals relating to the establishment of the IPPTA with the following modifications: (1) the final regulations at subpart P will be applicable beginning in 2024 with a modification to the definition in § 155.1505 that extends the pre-testing and assessment period from one calendar year to 2 calendar years; and (2) with a modification to § 155.1515(a)(1) that reflects the extension of the pre-testing and assessment period such that each State Exchange will be selected to participate in the IPPTA for a pre-testing and assessment period of 2 calendar years, which will begin in either 2024 or 2025. We note that, in response to comments regarding burden and resources, we are extending the pre-testing and assessment period from one calendar year to 2 calendar years without increasing or changing any of the IPPTA requirements in order to provide State Exchanges with more time to perform and complete all of the IPPTA requirements. The extended pre-testing and assessment period will also reduce burden to the State Exchanges by allowing more time to focus on other Exchange priorities instead of meeting the IPPTA requirements in one year. Additionally, the burden per State Exchange in estimated hours per year was reduced from 530 to 265, and the burden in estimated costs per year was reduced from $56,986 to $28,493 by allowing State Exchanges to spread their costs over a two-year period. The estimated annualized cost across all State Exchanges by extending the pre-testing and assessment period by one calendar year to 2 calendar years without changing any of the IPPTA requirements was reduced from $1,025,756 to $512,878, saving State Exchanges half of their estimated outlays on an annualized basis. We will also work with each State Exchange during the IPPTA orientation and planning process to address a State Exchange's time and resource constraints to allow completion of all review processes and procedures. We summarize and respond to public comments received on the proposed IPPTA below.

Comment: Some commenters recommended that prior to the implementation of IPPTA or an improper payment measurement program, HHS complete the SEIPM voluntary State engagement piloting to incorporate lessons learned and best practices into the design of IPPTA and/or a future improper payment measurement program. One commenter supported IPPTA but was opposed to the mandatory nature of the initiative.

Response: Throughout the course of the voluntary State engagement, we sought State Exchange feedback to improve the structure of the planned program and to improve the tools that will be used in IPPTA in support of reviewing payments of APTC. We applied the feedback and lessons learned to gain a better understanding of State Exchange operations, policies, and procedures. Additionally, we were able to define necessary data specifications for conducting improper payment measurement and to determine data transfer and access mechanisms between HHS and State Exchanges.

We appreciate the voluntary participation of the 10 State Exchanges and acknowledge the benefits such participation has provided in our development of the planned measurement program. We have determined that participation in IPPTA by all the State Exchanges is necessary to help State Exchanges prepare for the planned measurement of improper payments. In addition, requiring participation in IPPTA will provide us with feedback from all 18 State Exchanges on the processes and procedures that support our review of APTC determinations made by State Exchanges, and therefore will help us maximize the efficiency of the measurement process. To achieve that, we have determined that all State Exchanges will need to complete the processes described for IPPTA with the goal of testing our IPPTA review methodology for each State Exchange. In this way, all State Exchanges will have the opportunity to collaborate with us and receive feedback on their current processes without our IPPTA review contributing to an estimated improper payment rate.

Comment: One commenter said they supported allowing State Exchanges to satisfy IPPTA requirements through activities undertaken during voluntary State engagements.

Response: Our general position is that activities that were performed by the 10 State Exchanges that participated in voluntary State engagement will not be duplicated as part of IPPTA. To achieve that, we will evaluate the activities performed by State Exchanges during the voluntary State engagements and determine which of those satisfy IPPTA requirements. We will also utilize voluntary State engagement information as a substitute, thereby, saving time and resources needed for the completion of IPPTA. We will accomplish this by using the pre-testing and assessment checklist, which will identify the IPPTA requirements that have already been fulfilled. The pretesting and assessment plan will include the pre-testing and assessment checklist that will identify which State Exchange's activities satisfied the requirements. We will work with State Exchanges during the orientation and planning process to review the checklist and to confirm the State Exchange's completed activities. Additional information about the process for satisfying certain IPPTA requirements as a result of participation in the voluntary State engagements will be provided in guidance issued after this rule is finalized. State Exchanges that did not participate in voluntary State engagement will not have performed activities that satisfy IPPTA requirements and therefore must complete all IPPTA processes and procedures.

Comment: Some commenters stated that IPPTA would duplicate requirements embodied in existing Federal reporting requirements. For example, these commenters cited the State-based Marketplace Annual Reporting Tool (SMART), annual independent external programmatic audits, State Based Marketplace Inbound (SBMI) reporting, performance monitoring data reporting, and reconciliation processes including the annual IRS PTC reconciliation as Federal requirements that may duplicate IPPTA. A few commenters recommended HHS build on existing audit requirements (for example, the independent, external programmatic audit) rather than create a new IPPTA requirement. One commenter recommended State Exchanges make a testing environment for HHS to run standard tests rather than create a new data collection process. Another commenter stated that both the independent external auditors and the IRS PTC reconciliation process already collect data that could be used to determine an improper payment rate.

Response: We appreciate the commenters' concerns that IPPTA would be duplicative of existing audits; however, IPPTA is not an audit program but instead is designed to test processes and procedures that support our review of determinations of APTC made by State Exchanges for the planned measurement of improper payments. Additionally, the independent external programmatic audits ensure oversight of a host of exchange activities beyond the scope of improper APTC payments. Moreover, the data collected as part of the Federal reporting requirements identified by the commenters do not provide us with information required by § 155.1510 such as information that verifies citizenship, social security number, residency, and other data specified below. This information is needed to review determinations of APTC, which is a necessary step to prepare for identifying and measuring improper payments of APTC, as required by PIIA.[276] For example, the IRS reconciliation process uses annual enrollment data and monthly reconciliation data provided by HHS to calculate the PTC and to verify reconciliation of APTC made to the QHP issuers on enrollees' individual tax returns. However, these annual enrollment data and monthly reconciliation data do not contain data to the level of required specificity (such as dates that electronic eligibility verifications were made) to address issues related to APTC and its calculation, particularly verification of citizenship, social security number, residency, MEC, SEP circumstance, income, family size, and DMIs related to document authenticity. Moreover, the annual enrollment data and the monthly reconciliation data are collected after an applicant has been determined eligible for APTC. We need pre-enrollment data that were used to verify an applicant's eligibility before the application is approved. Examining these areas in detail is necessary to identify underlying issues that may lead to improper payments. In contrast, the SMART allows State Exchanges to self-attest to their verification procedures for eligibility and enrollment transactions without submitting supporting data. Similarly, the annual independent external programmatic audits require State Exchanges to hire independent, external auditors to review eligibility and enrollment information collected by State Exchanges to identify deficiencies or errors in processes to make eligibility determinations for QHPs and APTC without submitting supporting data to HHS. Neither the SMART nor the independent, external programmatic audits measure, estimate, or report the amounts or rates of improper payments, or the systematic errors that may contribute to improper payments and do not provide the underlying data that would allow HHS to do so. Finally, these current oversight procedures do not allow for standardized comparison or analysis of improper payments across all State Exchanges, which will be necessary functions of the planned improper payment measurement program. For these reasons, we will require State Exchanges to submit the data and data documentation specified in the final rule to comply with PIIA requirements. We believe that IPPTA will assist State Exchanges to prepare for the planned measurement of improper payments, an activity with requirements that are distinct from existing Federal requirements. IPPTA will provide the data needed to conduct the pre-testing and assessment review processes in preparation for the planned measurement of improper payments. We note that in designing IPPTA, we have carefully reviewed the commenters' concerns regarding potential duplication of existing audit processes and analyzed the data fields used to accomplish existing Federal requirements. We have made every effort to minimize the burden on the State Exchanges by limiting the amount of data required (that is, application data associated with no fewer than 10 tax households).

Comment: Some commenters stated that IPPTA would create financial, administrative, and staffing burdens for the State Exchanges. A few commenters stated that they would incur technology upgrade costs to provide information in the format requested by IPPTA and one said HHS should wait until after the voluntary State engagement piloting is completed to enable State Exchanges to make an accurate assessment of technology costs. One commenter was opposed to the overall burden of IPPTA but was supportive of our desire to coordinate and consult with State Exchanges.

Response: We received several comments regarding the burden and resources (that is, budget, staff, time, technology upgrades) needed to prepare for and fulfill IPPTA's requirements. We understand these concerns and, therefore, are finalizing the establishment of the IPPTA with a modification to extend the pre-testing and assessment period from one calendar year to two calendar years without increasing or changing any of the IPPTA requirements in order to allow State Exchanges more time to perform and complete all IPPTA requirements. By doing so, we are extending the timeframes allotted for State Exchanges to execute the pre-testing and assessment procedures including the timeframes for the submission and review of data and data documentation. By extending the pre-testing and assessment period to two calendar years and not otherwise expanding the IPPTA requirements, we are providing the State Exchanges with the ability to spread their staffing, administrative, and other budgetary costs across 24 months of activity instead of 12 months as well as providing State Exchanges additional time to identify and address staffing capacity and technology capabilities.

The planning and orientation phase will involve collaboration between HHS and the State Exchanges to create the IPPTA plan, which will include a timeline for completing the required pre-testing and assessment processes. There is sufficient flexibility in this process that conceivably, the State Exchange could plan to complete, and achieve completion of all of the required processes within the span of one year if the State Exchange was able to dedicate the time and resources that would be so required.

[276] In 2016, we conducted a risk assessment of the APTC program and determined that the program was susceptible to significant improper payments. PIIA requires that Federal agencies produce a statistically valid estimate of improper payments for any programs deemed susceptible to significant improper payments.

We are committed to working with State Exchanges to address burden and resources during the orientation and planning processes, which would allow State Exchanges to complete the IPPTA. Finally, we acknowledge that State Exchanges may incur additional costs depending on their technology capabilities. We provided the public with our estimate of the burden and costs to State Exchanges in section IV., Information Collection Requirements. We are willing to continue to work with State Exchanges to help to resolve technology issues during the orientation and planning processes.

Comment: One commenter stated that the review methodology and associated data structure used by HHS for the FFE does not uniformly align with State Exchange practices. The commenter added that HHS is applying a standardized approach despite the flexibility provided to State Exchanges under the ACA.

Response: We note that IPPTA is intended to test processes and procedures that support our review of determinations of APTC made by State Exchanges. We acknowledge the complexities associated with the development of a planned measurement program tailored for each State Exchange and that the methodology used for the improper payment measurement program for the FFE does not directly translate to operationalization for State Exchange measurement. Those complexities, which include the State Exchange's mapping their source data to the Data Request Form (DRF) and validation and verification of the data by HHS, require close collaboration between HHS and each of the State Exchanges as described in § 155.1515(e)(2), and in part, form the basis for the necessity of the IPPTA program in preparing the State Exchanges for an improper payment measurement program. Through collaboration with the State Exchanges during IPPTA, we will make every attempt to resolve data structure issues that differ between the FFE data model and the State Exchanges.

Comment: A few commenters suggested that HHS provide State Exchanges with an exemption from the annual independent, external programmatic audit requirement under 45 CFR 155.1200(c) if HHS finalized IPPTA, and they suggested that continuing to require the audit would be duplicative of activities under IPPTA.

Response: The annual independent, external programmatic audits are one of the primary oversight tools for identifying and addressing State Exchange regulatory compliance issues, and the audit reports ensure oversight of a variety of exchange-related activities beyond the scope of potential improper payments of APTC. As part of the auditing process, we require State Exchanges to take corrective actions to address non-compliance issues that are identified through the annual audits and monitor the implementation of the corrective actions. We designed IPPTA to minimize the burden on the State Exchanges by limiting the amount of data required to only what is necessary to conduct the pre-testing and assessment review processes that will prepare State Exchanges for the planned measurement of improper payments. Modifying the annual independent, external programmatic audit requirement would eliminate a key oversight mechanism over activities beyond the scope of the SEIPM program and potentially impact our ability to adequately oversee program integrity in the State Exchanges.

Comment: One commenter requested more information regarding the sunsetting of the SEIPM piloting option.

Response: We appreciate the comment regarding the sunsetting of the voluntary State engagement. As stated in the preamble, IPPTA will replace the voluntary State engagement. Voluntary State engagement activities will cease by the end of 2023. We will provide further guidance after the publication of this final rule.

Comment: Some commenters expressed their position as neutral or did not express a position in support or opposition of IPPTA. These commenters expressed concerns regarding burden and duplication of existing Federal requirements. These commenters also suggested that HHS complete the voluntary piloting prior to establishing IPPTA.

Response: We appreciate those commenters who expressed various concerns but remained neutral overall to IPPTA, either expressly indicating their neutrality or choosing not to take a position in support or opposition of IPPTA. We have addressed the burden, duplication of existing Federal requirements, and voluntary State engagement in the preamble to this final rule.

a. Purpose and Scope (§ 155.1500)

In the HHS Notice of Benefit and Payment Parameters for 2024 proposed rule (87 FR 78206, 78270), we proposed to add a new subpart P to part 155, which addressed State Exchange and HHS responsibilities. We explained that we may use Federal contractors as needed to support the performance of IPPTA.

We proposed to add new § 155.1500 to convey the purpose and scope of IPPTA. In the proposed rule, at paragraph (a), we stated the purpose and scope of subpart P as setting forth the requirements of the IPPTA for State Exchanges. We explained that the proposed IPPTA is an initiative between HHS and State Exchanges. We stated in the proposed rule that the IPPTA requirements were intended to prepare State Exchanges for the planned measurement of improper payments, test processes and procedures that support our review of determinations of APTC made by State Exchanges, and provide a mechanism for HHS and State Exchanges to share information that will aid in developing an efficient measurement process.

We summarize and respond to public comments received on the purpose and scope of IPPTA below. After reviewing the public comments, we are finalizing this provision as proposed.

Comment: One commenter stated that consultation with State Exchanges is crucial to collecting accurate information and recommended HHS retain the proposed regulatory language requiring strong coordination and consultation with State Exchanges.

Response: We appreciate the recommendation to retain the language of the proposed rule that we work with State Exchanges including coordinating and consulting during the IPPTA period. We are retaining the language in the rule pertaining to coordinating with the State Exchanges during the IPPTA period. As stated in the preamble to the proposed rule (87 FR 78270), IPPTA is intended to be a collaborative effort between us and the State Exchanges.

b. Definitions (§ 155.1505)

In the HHS Notice of Benefit and Payment Parameters for 2024 proposed rule (87 FR 78206, 78270–71) we proposed to add new § 155.1505, which would codify the definitions of several terms that are specific to IPPTA and are key to understanding the processes and procedures of IPPTA. Specifically, we proposed to define the following terms as set forth below.

- We proposed to define ''Business rules'' to mean the State Exchange's internal directives defining, guiding, or constraining the State Exchange's actions when making eligibility determinations and related APTC calculations. In the proposed rule we explained that, for example, the internal directives, methodologies, algorithms, or policies that a State Exchange applies or executes on its own data to determine whether an applicant meets the eligibility requirements for a QHP and

any associated APTC would be considered a business rule.

• We proposed to define ''Entity relationship diagram'' to mean a graphical representation illustrating the organization and relationship of the data elements that are pertinent to applications for QHP and associated APTC payments.

• We proposed to define ''Pre-testing and assessment'' to mean the process that uses the procedures specified in § 155.1515 to prepare State Exchanges for the planned measurement of improper payments of APTC.

• We proposed to define ''Pre-testing and assessment checklist'' to mean the document that contains criteria that HHS will use to review a State Exchange's completion of the requirements of the IPPTA.

• We proposed to define ''Pre-testing and assessment data request form'' to mean the document that specifies the structure for the data elements that HHS will require each State Exchange to submit.

• We proposed to define ''Pre-testing and assessment period'' to mean the timespan during which HHS will engage in the pre-testing and assessment procedures with a State Exchange. In the proposed rule, we proposed that the pre-testing and assessment period would cover one calendar year.

• We proposed to define ''Pre-testing and assessment plan'' to mean the template developed by HHS in collaboration with each State Exchange enumerating the procedures, sequence, and schedule to accomplish the pre-testing and assessment.

• We proposed to define ''Pre-testing and assessment report'' to mean the summary report provided by HHS to each State Exchange at the end of the State Exchange's pre-testing and assessment period that will include, but not be limited to, the State Exchanges' status regarding completion of each of the pre-testing and assessment procedures specified in proposed § 155.1515, as well as observations and recommendations that result from processing and testing the data submitted by the State Exchanges to HHS. In the proposed rule, we explained, at § 155.1515(g), that we were proposing that the pre-testing and assessment report is intended to be used internally by HHS and each State Exchange as a reference document for performance improvement. We explained that the pre-testing and assessment report will not be released to the public by HHS unless otherwise required by law.

We summarize and respond to public comments received on the proposed definitions below. We are finalizing the definitions as proposed, with the following modification: we are changing the proposed definition of ''Pre-testing and assessment period'' to extend the pre-testing and assessment period from a one calendar year timespan to a 2-calendar year timespan, during which we will engage in pre-testing and assessment procedures with a State Exchange. As discussed earlier in this preamble, we are making this modification in response to comments received regarding burden and resources (that is, budget, staff, time, technology upgrades, etc.). By extending the pre-testing and assessment period from one calendar year to two calendar years without increasing or changing any of the IPPTA requirements, we are providing State Exchanges with more time to perform and complete all IPPTA requirements.

Comment: One commenter requested that HHS clarify the definition of ''entity relationship diagram.'' The commenter stated they did not understand how the diagram would be used to describe data elements, and the commenter also requested more information on how sample data would be collected.

Response: An entity relationship diagram is used to document the data structure of a database and the relationships of the various data elements that are used to align many pieces of data to the individual records within a data set. For the purposes of IPPTA, the entity relationship diagram would be used to aid in understanding the mapping of data from the data structures being used by the State Exchange to the structure of data being used for the review, which is collected in the data request form (DRF). In addition, an entity relationship diagram will provide an understanding of the relationships among State Exchange-provided data and can explain the data values provided by the State Exchange in the DRF. The properties associated with each entity need to be understood by the reviewers to ensure that the mapping of data and the population of the DRF have been performed correctly. During IPPTA planning, we will work with the State Exchanges to determine whether available documentation can satisfy the information needs for the entity relationship diagram.

c. Data Submission (§ 155.1510)

In the HHS Notice of Benefit and Payment Parameters for 2024 proposed rule (87 FR 78206 at 78271), we proposed to add a new § 155.1510 which would address the data submission requirements to support the IPPTA. Consistent with this, we proposed to establish a pre-testing and assessment DRF to collect and compile information from each State Exchange. As explained below in section IV., Collection of Information Requirements, the pre-testing and assessment DRF was submitted to OMB for review and approval. We proposed that each State Exchange must submit to us a sample of no fewer than 10 tax household identification numbers (that is, the record of a tax household that applied for and was determined eligible to enroll in a QHP and was determined eligible to receive APTC in an amount greater than $0).

We summarize and respond to public comments received on the proposed pre-testing and assessment DRF below. After reviewing the public comments, we are finalizing this provision as proposed.

Comment: Several commenters stated that they are willing to share more data and information with HHS and other Federal partners to ensure the effective and efficient operation of State Exchanges.

Response: We appreciate the willingness of these commenters to share more data and information with us and other Federal partners to ensure that the State Exchanges operate in an efficient and effective manner.

Comment: A few commenters suggested that HHS not require State Exchanges to produce information about their systems, business rules, or software. Two commenters recommended that HHS not require new data documentation but rather accept a State Exchange's existing data documentation. One commenter objected to the comprehensive submission of business rules and proposed using identified errors as the basis for root cause analysis. One commenter objected generally to the provision of system documentation including concerns that some documentation may be proprietary. One commenter objected to the detailed review of eligibility criteria and examination of associated data. Another commenter recommended that HHS allow State Exchanges to submit data documentation such as the data dictionary and entity relationship diagram in any format.

Response: We are not requiring State Exchanges to create new data documentation, but rather we are requiring State Exchanges provide us with existing or available data documentation as described in § 155.1510, such as business rules and policies used to determine an applicant's eligibility for APTC. This data documentation is necessary to test

our processes and procedures that support our review of determinations of APTC made by State Exchanges. We are seeking to test all the processes associated with IPPTA. Therefore, the information provided by State Exchanges regarding their systems and business rules will allow us to tailor review procedures to each State Exchange. A detailed review of eligibility criteria is necessary to create a measurement program that complies with the statutory requirements set forth in PIIA. Regarding the submission of the data dictionary and entity relationship diagram in any format, we agree with the commenter. We will allow State Exchanges to submit their data documentation as defined in this final rule in the format currently used by the State Exchange.

We will coordinate with State Exchanges to resolve any issues that may arise related to the potential proprietary nature of this data documentation and ensure that any such data documentation provided is not made publicly available, unless required by law.

• At paragraph (a)(1) in the proposal, we proposed that a State Exchange would be required to submit to HHS by the deadline in the pre-testing and assessment plan the following documentation for their data: (i) the State Exchange's data dictionary including attribute name, data type, allowable values, and description; (ii) an entity relationship diagram, which shall include the structure of the data tables and the residing data elements that identify the relationships between the data tables; and (iii) business rules and related calculations.

• At paragraph (a)(2) in the proposal, we proposed that the State Exchange must use the pre-testing and assessment DRF, or other method as specified by HHS, to submit to HHS the application data associated with no fewer than 10 tax household identification numbers and the associated policy identification numbers that address scenarios specified by HHS to allow HHS to test all of the pre-testing and assessment processes and procedures. We explained that the proposed scenarios would include various application characteristics such as household composition, data matching inconsistencies (for example, SSN, citizenship, lawful presence, annual income) identified for the applications, SEP application types (for example, relocation, marriage), periodic data matching (for example, Medicaid/CHIP, Medicare, death), application status (for example, policy terminated, policy canceled), and application types (for example, initial application). We explained that we understand that it is unlikely that the application data associated with a singular tax household could address all of the characteristics contained in all of the scenarios specified. Therefore, we proposed that while the application data for each tax household does not need to address all the scenarios specified, the application data submitted for no fewer than 10 tax households should, when taken together as a whole, address all the characteristics in all the scenarios specified. We explained that, for example, the application data for one tax household may address lawful presence inconsistency adjudication but not special enrollment eligibility verification. Accordingly, we noted that the application data for another tax household should address special enrollment eligibility verification. In the proposal we stated that after receiving the application data associated with no fewer than 10 tax households from the State Exchange, we would test the data from each of the tax households against its review procedures to determine if the respective policy applications fulfill the scenarios. If the submitted application data did not collectively fulfill the scenarios, we proposed that we would coordinate with the State Exchange to select additional tax households. For the data submitted, we also would require the State Exchange to provide digital copies such as PDFs of supporting consumer-submitted documentation (for example, proof of residency, proof of citizenship).

• We also proposed that for each of the tax households, the State Exchange would align and populate the data in the pre-testing and assessment DRF with the assistance of HHS. We explained that we would require that the State Exchange electronically transmit the completed pre-testing and assessment DRF to HHS within the deadline specified in the pre-testing and assessment plan. We proposed that once we receive the transmission from the State Exchange, we then would execute the pre-testing and assessment processes and procedures on the application data.

We summarize and respond to public comments received on submission of application data for no fewer than 10 tax households using the pre-testing and assessment DRF that will be provided to State Exchanges by HHS and on the proposed scenarios specified by HHS to allow HHS to test all of the pre-testing and assessment processes and procedures below. After reviewing the public comments, we are finalizing § 155.1510(a) as proposed.

Comment: A few commenters support the sample size of no fewer than 10 tax households.

Response: We appreciate support of the no fewer than 10 tax household sample size.

Comment: One commenter agreed with the use of the pre-testing and assessment DRF to collect and compile information from each State Exchange.

Response: We appreciate support for collecting information from the State Exchanges using the pre-testing and assessment DRF.

• At paragraph (b) in the proposal, we proposed that a State Exchange must submit the data documentation as specified in § 155.1510(a)(1) and the application data associated with no fewer than 10 tax households as specified in § 155.1510(a)(2) within the timelines in the pre-testing and assessment plan specified in § 155.1515.

We did not receive any comments in response to the proposed pretesting and assessment data submission timeline. We are finalizing § 155.1510(b) as proposed.

d. Pre-Testing and Assessment Procedures (§ 155.1515)

In the HHS Notice of Benefit and Payment Parameters for 2024 proposed rule (87 FR 78206, 78271 through 72), we proposed to add a new § 155.1515 which would address the requirements associated with the pre-testing and assessment procedures that underlie and support the IPPTA. The pre-testing and assessment procedures are the activities of IPPTA that are, in part, designed to test our review processes and procedures that support our review of determinations of the APTC made by State Exchanges, to improve the State Exchange's understanding of IPPTA, to prepare State Exchanges for the planned measurement of improper payments, and to provide us and the State Exchanges with a mechanism to share information that will aid in developing an efficient measurement process.

Comment: One commenter supported the need to prepare State Exchanges for the planned measurement of improper payments.

Response: We appreciate recognition of the need to prepare State Exchanges for the planned measurement of improper payments.

• At paragraph (a), we proposed the general requirement that the State Exchange must participate in IPPTA for a period of one calendar year that will occur in either 2024 or 2025, and that the State Exchange and HHS would work together to execute IPPTA procedures in accordance with

timelines in the pre-testing and assessment plan.

We did not receive any comments in response to the proposed requirement for State Exchanges to participate in IPPTA for one calendar year in either 2024 or 2025. In response to comments regarding burden and resources (that is, budget, staff, time, technology upgrades), and as previously discussed in the preamble of the rule, we are finalizing this provision with the following modification: we are extending the pre-testing and assessment period from one calendar year to 2 calendar years without increasing or changing any of the IPPTA requirements in order to provide State Exchanges with more time to perform and complete all IPPTA requirements. We are requiring State Exchanges to participate in IPPTA for a pre-testing and assessment period of 2 calendar years, which would begin in either 2024 or 2025.

• At paragraph (b), we proposed the requirements for the orientation and planning processes.

• At paragraph (b)(1), we proposed that we would provide State Exchanges with an overview of the pre-testing and assessment procedures as part of the orientation process. We also proposed that, during the orientation process, we would identify the documentation that a State Exchange must provide to HHS for pre-testing and assessment. We explained that, for example, if data use agreements or information exchange agreements need to be executed, we would inform State Exchanges about that documentation requirement.

We did not receive any comments in response to the proposed State Exchange IPPTA orientation process. We are finalizing these provisions as proposed.

• At paragraph (b)(2), we proposed that HHS, in collaboration with each State Exchange, would develop a pre-testing and assessment plan as part of the orientation process. We explained that the pre-testing and assessment plan would be based on a template that enumerates the procedures, sequence, and schedule to accomplish pre-testing and assessment. In the proposal, we noted that while we would need to meet milestones specified in the schedule and applicable deadlines due to the time span allotted for this proposed program, we would take into account feedback from the State Exchanges in an effort to minimize burden. We stated that the pre-testing and assessment plan would take into consideration relevant activities, if any, that were completed during voluntary State engagement. We explained that the pre-testing and assessment plan would include the pre-testing and assessment checklist.

We summarize and respond to public comments received on the proposed pre-testing and assessment plan below. After reviewing the public comments, we are finalizing this provision as proposed.

Comment: One commenter said that more information was needed to inform State Exchanges of how their activities would satisfy IPPTA requirements.

Response: We appreciate the cooperation and collaboration of State Exchanges that have participated in voluntary State engagement. We will work with State Exchanges during the IPPTA orientation and planning process to review the pre-testing and assessment checklist and confirm the State Exchange's completed activities that satisfy certain IPPTA requirements. One of the major activities in the voluntary State engagements has been the submission of data by the State Exchange, which includes the mapping of a State Exchange's source data to the data elements in our DRF. The DRF has been used by State Exchanges participating in the pilot option of the voluntary State engagement to collect and transmit application data for testing. In the scenario that a State Exchange submitted data on the DRF during the piloting option of voluntary State engagement, and where review processes were not able to be completed due to the sunsetting of voluntary State engagement activities, we will incorporate the previously submitted data to satisfy IPPTA data submission requirements. Similarly, in the scenario where data was submitted by a State Exchange, but the data was not sufficient to execute the review methodology, we will incorporate the previously submitted data into IPPTA and continue working with the State Exchange for the purpose of satisfying IPPTA data submission requirements. Our general position is that a State Exchange that submitted data while participating in the piloting option of voluntary State engagement will not be required as part of IPPTA to submit new data for a more recent benefit year. State Exchanges that did not submit data as part of the voluntary State engagement are required to submit data for the benefit year most recent to their designated IPPTA period agreed upon as part of the orientation and planning process.

• At paragraph (b)(3), we proposed that we would issue a pre-testing and assessment plan specific to a State Exchange at the conclusion of the pre-testing and assessment planning process. We explained that the pre-testing and assessment plan would be for HHS and State Exchange internal use only and would not be made available to the public by HHS unless otherwise required by law.

We did not receive any comments in response to the proposal that we would issue a pre-testing and assessment plan specific to a State Exchange at the conclusion of the pre-testing and assessment planning process. We also did not receive any comments in response to the proposal that the pre-testing and assessment plan would be used for internal use only and would not be made publicly available by HHS unless required by law. We are finalizing this provision as proposed.

• At paragraph (c), we proposed the requirements associated with notifications and updates.

• At paragraph (c)(1), we proposed the requirements associated with our responsibility to notify State Exchanges, as needed throughout the pre-testing and assessment period, concerning information related to the pre-testing and assessment processes and procedures.

We did not receive any comments in response to the proposed requirement for HHS to notify State Exchanges of the pre-testing and assessment data request period. We are finalizing these provisions as proposed.

• At paragraph (c)(2), we proposed the requirements associated with information State Exchanges must provide to HHS throughout the pre-testing and assessment period regarding any operational, policy, business rules (for example, data elements and table relationships), information technology, or other changes that may impact the ability of the State Exchange to satisfy the requirements of IPPTA during the pre-testing and assessment period. We explained, for example, that we would need to be made aware of changes to the State Exchange's technical platform or modifications to its policies or procedures as these changes may impact specific pre-testing and assessment processes or procedures, the data to be reviewed, and ultimately a State Exchange's determinations of an applicant's eligibility for APTC. We proposed that other decisions or changes made by a State Exchange, which could affect the pre-testing and assessment including any changes regarding items such as naming conventions or definitions of specific data elements used in the pre-testing and assessment, must be submitted to HHS. We proposed this requirement because any lack of clarity in how State Exchanges make eligibility determinations and payment

calculations could impact our ability to assist the State Exchange in understanding the pre-testing and assessment processes and procedures and could affect our recommendations in the pre-testing and assessment report.

We did not receive any comments in response to the proposed requirements associated with information that State Exchanges must provide to HHS throughout the pre-testing and assessment period regarding any operational, policy, business rules, information technology, or other changes that may impact the ability of the State Exchange to satisfy the requirements of IPPTA during the pre-testing and assessment period. We are finalizing this provision as proposed.

• At paragraph (d), we proposed the requirements regarding the submission of required data and data documentation by State Exchanges, and we stated that, as specified in § 155.1510(a), we will inform State Exchanges about the form and manner for State Exchanges to submit required data and data documentation to HHS in accordance with the pre-testing and assessment plan.

We did not receive any comments to the specific proposed requirement for HHS to coordinate data documentation tracking and management with each State Exchange. We responded to related comments regarding the underlying data submission requirements that appear in § 155.1510(a)(2). We are finalizing this provision as proposed.

• At paragraph (e), we proposed the general requirements regarding coordination between HHS and the State Exchanges to facilitate our processing of data and data documentation submitted by State Exchanges.

• At paragraph (e)(1), we proposed the requirements associated with our responsibility to coordinate with each State Exchange to track and manage the data and data documentation submitted by a State Exchange as specified in § 155.1510(a)(1) and (2).

We did not receive any comments in response to the proposed requirement for HHS to coordinate data documentation tracking and management with each State Exchange. We are finalizing these provisions as proposed.

• At paragraph (e)(2), we proposed the requirements associated with our responsibility to coordinate with each State Exchange to provide assistance in aligning the data specified in § 155.1510(a)(2) from the State Exchange's existing data structure to our standardized set of data elements.

We summarize and respond to public comments received on the proposed requirement for HHS to assist each State Exchange with data alignment to a standardized set of data elements below. After reviewing the public comments, we are finalizing this provision as proposed.

Comment: One commenter stated that HHS should use its own resources to map the State Exchange data elements to the pre-testing and assessment DRF.

Response: We considered an alternative to requiring each State Exchange to submit their source data using the pre-testing and assessment DRF. That alternative would have allowed a State Exchange to provide to us the required source data in an unstructured format. We would have been required to map the source data to the required data elements. The mapping process would have required consultative sessions with each State Exchange and a validation process to ensure accurate mapping. Some State Exchanges stated during voluntary State engagement that they preferred mapping their data to the data elements in the DRF in order to ensure accuracy of mapping. We believe that the consultative process suggested by the commenter would require more frequent and resource-intensive meetings, costing each party more than use of standard data fields in the pre-testing and assessment DRF. The regulatory alternative was documented in the proposed rule (87 FR 78206, 78313) and no additional comments were received in favor of that option. For these reasons, we are finalizing this provision as proposed. We are requiring that HHS coordinate with each State Exchange to aid in aligning the data specified in § 155.1510(a)(2) from the State Exchange's existing structure to the standardized set of data elements required for IPPTA.

• At paragraph (e)(3), we proposed the requirement that we will coordinate with each State Exchange to interpret and validate the data specified in § 155.1510(a)(2).

We did not receive any comments in response to the proposed requirement for HHS to coordinate with each State Exchange to interpret and validate the data specified. We are finalizing this provision as proposed.

• At paragraph (e)(4), we proposed the requirement that we would use the data and data documentation submitted by the State Exchange to execute the pre-testing and assessment procedures.

We did not receive any comments in response to the proposed requirement for HHS to use the data and data documentation submitted by the State Exchange to execute the pre-testing and assessment procedures. We are finalizing this provision as proposed.

• At paragraph (f), we proposed the requirements that we would issue the pre-testing and assessment checklist in conjunction with and as part of the pre-testing and assessment plan. We explained that the pre-testing and assessment checklist criteria we proposed would include but would not be limited to:

++ At paragraph (f)(1), the State Exchange's submission of the data documentation as specified in § 155.1510(a)(1);

We did not receive any comments in response to the proposed requirement for the pre-testing and assessment checklist criteria to include the State Exchange's submission of the data documentation as specified. We are finalizing this provision as proposed.

++ At paragraph (f)(2), the State Exchange's submission of the data for processing and testing as specified in § 155.1510(a)(2); and

We did not receive any comments in response to the proposed requirement for the pre-testing and assessment criteria to include the State Exchange's submission of the data for processing and testing. We are finalizing this provision as proposed.

++ At paragraph (f)(3), the State Exchange's completion of the pre-testing and assessment processes and procedures related to the IPPTA program.

We did not receive any comments in response to the proposed requirement for the pre-testing and assessment criteria to include the State Exchange's completion of the pre-testing and assessment processes and procedures related to the IPPTA program. We are finalizing this provision as proposed.

• At paragraph (g), we proposed that, subsequent to the completion of a State Exchange's pre-testing and assessment period, we will prepare and issue a pre-testing and assessment report specific to that State Exchange. We proposed that the pre-testing and assessment report would be for HHS and State Exchange internal use only and would not be made available to the public by HHS unless otherwise required by law.

We did not receive any comments in response to the proposal that, subsequent to the completion of a State Exchange's pre-testing and assessment period, we will prepare and issue a pre-testing and assessment report specific to that State Exchange. We also did not receive any comments in response to the proposal that the report would be for HHS and State Exchange internal use only and would not be made available

to the public by HHS unless otherwise required by law. We are finalizing this provision as proposed.

C. Part 156—Health Insurance Issuer Standards Under the Affordable Care Act, Including Standards Related to Exchanges

1. FFE and SBE–FP User Fee Rates for the 2024 Benefit Year (§ 156.50)

In the HHS Notice of Benefit and Payment Parameters for 2024 proposed rule (87 FR 78206, 78272 through 78273), for the 2024 benefit year, we proposed an FFE user fee rate of 2.5 percent of total monthly premiums and an SBE–FP user fee rate of 2.0 percent of the total monthly premiums.

Section 1311(d)(5)(A) of the ACA permits an Exchange to charge assessments or user fees on participating health insurance issuers as a means of generating funding to support its operations. If a State does not elect to operate an Exchange or does not have an approved Exchange, section 1321(c)(1) of the ACA directs HHS to operate an Exchange within the State. Accordingly, in § 156.50(c), we stated that a participating issuer offering a plan through an FFE or SBE–FP must remit a user fee to HHS each month that is equal to the product of the annual user fee rate specified in the annual HHS notice of benefit and payment parameters for FFEs and SBE–FPs for the applicable benefit year and the monthly premium charged by the issuer for each policy where enrollment is through an FFE or SBE–FP. OMB Circular A–25 established Federal policy regarding user fees and what the fees can be used for.[277] In particular, it specifies that a user fee charge will be assessed against each identifiable recipient of special benefits derived from Federal activities beyond those received by the general public.

a. FFE User Fee Rates for the 2024 Benefit Year

In § 156.50(c)(1), to support the functions of FFEs, an issuer offering a plan through an FFE must remit a user fee to HHS, in the timeframe and manner established by HHS, equal to the product of the monthly user fee rate specified in the annual HHS notice of benefit and payment parameters for the applicable benefit year and the monthly premium charged by the issuer for each policy where enrollment is through an FFE. As we stated in the proposed rule, as in benefit years 2014 through 2023, issuers seeking to participate in an FFE in the 2024 benefit year will receive two special benefits not available to the general public: (1) the certification of their plans as QHPs; and (2) the ability to sell health insurance coverage through an FFE to individuals determined eligible for enrollment in a QHP. For the 2024 benefit year, issuers participating in an FFE will receive special benefits from the following Federal activities:

- Provision of consumer assistance tools;
- Consumer outreach and education;
- Management of a Navigator program;
- Regulation of agents and brokers;
- Eligibility determinations;
- Enrollment processes; and
- Certification processes for QHPs (including ongoing compliance verification, recertification, and decertification).

As we explained in the proposed rule (87 FR 78273), activities performed by the Federal Government that do not provide issuers participating in an FFE with a special benefit are not covered by the FFE user fee.

We stated in the proposed rule (87 FR 78273) that the proposed user fee rate for all participating FFE issuers of 2.5 percent of total monthly premiums was based on estimated costs, enrollment (including anticipated establishment of SBEs in certain States in which FFEs currently are operating), and premiums for the 2023 PY. We refer readers to the proposed rule (87 FR 78273) for a full description of how the proposed 2024 benefit year FFE user fee rate was developed.

b. SBE–FP User Fee Rates for the 2024 Benefit Year

In § 156.50(c)(2), we specify that an issuer offering a plan through an SBE–FP must remit a user fee to HHS, in the timeframe and manner established by HHS, equal to the monthly user fee rate specified in the annual HHS notice of benefit and payment parameters for the applicable benefit year and the monthly premium charged by the issuer for each policy where enrollment is through an SBE–FP, unless the SBE–FP and HHS agree on an alternative mechanism to collect the funds from the SBE–FP or State instead of direct collection from SBE–FP issuers. SBE–FPs enter into a Federal platform agreement with HHS to leverage the systems established for the FFEs to perform certain Exchange functions, and to enhance efficiency and coordination between State and Federal programs. We explained in the proposed rule that the benefits provided to issuers in SBE–FPs by the Federal Government include use of the Federal Exchange information technology and call center infrastructure used in connection with eligibility determinations for enrollment in QHPs and other applicable State health subsidy programs, as defined at section 1413(e) of the ACA, and QHP enrollment functions under 45 CFR part 155, subpart E. We stated that the user fee rate for SBE–FPs is calculated based on the proportion of user fee eligible FFE costs that are associated with the FFE information technology infrastructure, the consumer call center infrastructure, and eligibility and enrollment services, and allocating a share of those costs to issuers in the relevant SBE–FPs. We refer readers to the proposed rule (87 FR 78273 through 78274) for a full description of how the proposed 2024 benefit year SBE–FP user fee rate of 2.0 percent of total monthly premiums was developed.

We sought comment on the proposed 2024 user fee rates.

After reviewing the public comments and revising our projections based on newly available data that impacted our enrollment projections, we are finalizing for the 2024 benefit year a user fee rate for all issuers offering QHPs through an FFE of 2.2 percent of the monthly premium charged by the issuer for each policy under plans where enrollment is through an FFE, and a user fee rate for all issuers offering QHPs through an SBE–FP of 1.8 percent of the monthly premium charged by the issuer for each policy under plans offered through an SBE–FP. We summarize and respond to public comments received on the proposed 2024 benefit year FFE and SBE–FP user fee rates below.

Comment: Some commenters supported the proposed 2024 user fee rates by agreeing that a lower user fee rate would exert downward pressure on premiums. A few commenters supported user fee rate reduction in future years too. One commenter stated that lower user fee rates could incentivize additional issuers to participate in the Exchanges, providing consumers with additional choice. One supporting commenter wanted HHS to monitor whether a reduced user fee rate continued to fully serve consumers' needs moving forward. Many commenters appreciated the increased funding for consumer outreach.

Response: We proposed lowering the 2024 user fee rates in the proposed rule to 2.5 percent of monthly premiums charged by issuers for each policy under plans offered through an FFE and 2.0 percent of monthly premiums charged by issuers for each policy under plans offered through an SBE–FP based on our enrollment projections at the time. After publishing the proposed rule, two major

[277] See Circular No. A–25 Revised, available at *https://obamawhitehouse.archives.gov/omb/circulars_a025/.*

events have changed our estimated enrollment for benefit year 2024. The first event was the record 2023 Exchange Open Enrollment, with the number of plan selections exceeding our enrollment estimates.[278] The second event was the Consolidated Appropriations Act, 2023, signed into law of December 29, 2022, which included provisions that provided certainty that Medicaid redeterminations would take place beginning in 2023. These two changes, both of which took place between the publication of the proposed rule and the final rule, prompted us to reassess the 2024 projected enrollment estimates used in our user fee calculations. After additional analysis of increased future expected enrollment, we have determined that further reduction to the 2024 user fee rates is warranted.

FFE and SBE–FP user fees are collected from participating issuers as a percentage of total monthly premiums, which is calculated as the product of monthly enrollment and premiums. The increased future expected enrollment resulting from the record 2023 Open Enrollment and the Consolidated Appropriations Act, 2023, increased overall expected user fee collections under the proposed user fee rates of 2.5 percent of monthly premiums for FFE issuers and 2.0 percent of monthly premiums for SBE–FP issuers above levels determined to be necessary to fully fund Exchange operation. This increased collection estimate allowed for additional reductions of the user fee rates to 2.2 percent of monthly premiums for FFE issuers and 1.8 percent of monthly premiums for SBE–FP issuers without decreasing total estimated collections below levels necessary to fully fund Exchange operations.

Accordingly, we are finalizing user fee rates of 2.2 percent of monthly premiums charged by issuers for each policy under plans offered through an FFE and 1.8 percent of monthly premiums charged by issuers for each policy under plans offered through an SBE–FP. As discussed in the proposed rule (87 FR 78273), we believe that the lower 2024 user fee rates will exert downward pressure on premiums when compared to the user fee rates from prior years, and ensure adequate funding for Federal Exchange operations. We also agree that lower user fee rates may incentivize additional issuers to participate in the Exchanges, thereby promoting competition and improving consumer choice. HHS will continue to calculate the FFE and SBE–FP user fee rate annually in a manner that ensures sufficient funding for operations, ensuring that consumers' needs are met and consumer outreach is appropriately funded.

Comment: Many commenters expressed concern about the timing of decreased user fee rates considering the high anticipated volume of Medicaid redeterminations. These commenters suggested additional investment in outreach and enrollment and requested that the user fee rates be kept at their current levels. Several commenters stated that lower user fee rates could reduce funding for community health workers and encourage private navigators that are incentivized to direct consumers to certain private products. A few commenters supported using the higher pre-2022 user fee rates to improve *HealthCare.gov.* One commenter suggested retaining or increasing user fee rates to devote additional resources to hard to reach populations. One commenter suggested that reducing user fee rates may undermine the historic enrollment gains for 2023. One commenter disagreed that reducing user fee rates will result in downward pressure on premiums, citing other factors as more impactful drivers of premium increases.

Response: Although we are reducing the user fee rates, we are not reducing our user-fee budget and are considering the additional cost for Medicaid redeterminations, including providing consumer outreach and education related to unwinding, in our estimated budget. With these estimated costs, we are still able to reduce the user fees and retain this budget because we anticipate higher Exchange enrollment levels due to Medicaid redeterminations, and we expect the projected total premiums where the user fee applies to increase, thereby increasing the amount of user fee that will be collected. Thus, we are able to reduce the user fee rate without reducing the budget. We believe that any additional costs associated with Medicaid redeterminations will be offset by the higher expected enrollment and, even after accounting for the impact of the lower user fee rates, we estimate that we will have sufficient funding available to fully fund user-fee eligible Exchange activities in 2024, even with increased budget needs.

To further explain, due to high levels of anticipated enrollment through the end of 2025, and the increased total amount of user fees that will be collected as a result, we believe that a reduced user fee rate will not result in reduced funding to Exchange functions that address consumers' needs, including improvements to the *HealthCare.gov* website, outreach and enrollment campaigns, and the Navigator program. We understand that this funding is particularly impactful in improving coverage for hard to reach and underserved populations, which is why our estimated budget continues to estimate fully covering the costs of these programs, even with increased budgetary spending on these essential activities.

We also disagree that reducing user fees may undermine the historic enrollment gains for 2023, as we do not believe that the user fee rates have direct impact on major enrollment trends. Instead, we believe that the historic enrollment gains can be attributed to a number of factors that are non-user fee rate related, such as the enhanced PTC subsidies in section 9661 of the ARP being extended through the 2025 benefit year in section 12001 of the IRA.

Finally, while we acknowledge that there are many factors that drive premiums increases, we maintain that reduced user fee rates will tend to exert downward pressure on premiums, with issuers passing the additional savings from reduced user fees on to Exchange enrollees through lower premiums.

For these reasons, we are finalizing the reduced user fee rates for the 2024 benefit year of 2.2 percent of monthly premiums charged by issuers for each policy under plans offered through an FFE and 1.8 percent of monthly premiums charged by issuers for each policy under plans offered through an SBE–FP. As always, we will reassess the FFE and SBE–FP user fee rates for the 2025 benefit year and propose those rates in the proposed 2025 Payment Notice. We also note that we will continue to look for opportunities to reduce these user fee rates in the future, while ensuring that we will be able to fully fund all Exchange activities.

Comment: A few commenters stated that HHS should adopt a PMPM user fee structure, stating that administrative costs do not track with premium changes and a PMPM user fee would avoid higher fee amounts based solely on premium increases.

Response: We did not propose any changes to the user fee structure, as such the user fee rates will continue to be set as a percent of the premium. However, we will continue to engage with interested parties regarding how the FFE and SBE–FP user fee policies

[278] Biden-Harris Administration Announces Record-Breaking 16.3 Million People Signed Up for Health Care Coverage in ACA Marketplaces During 2022–2023 Open Enrollment Season, available at *https://www.cms.gov/newsroom/press-releases/biden-harris-administration-announces-record-breaking-163-million-people-signed-health-care-coverage.*

can best support consumer access to affordable, quality health insurance coverage through the Exchanges that use the Federal platform. We also note that, even if administrative costs do not trend with premium changes, we propose and finalize user fee rates each benefit year and would have the opportunity to adjust the user fee rates to avoid higher fee amounts based solely on premium increases. Therefore, even if administrative costs do not trend with premium changes, we do not believe that would necessarily justify a PMPM user fee cost structure.

Comment: One commenter appreciated the increased transparency around user fees, and encouraged additional transparency in the methodology used to set the user fee rates, as well as how user fees support HHS' policy goals for the Exchanges. A few other commenters recommended greater transparency in how the user fee rates are determined and requested enumerated costs of providing Federal eligibility and enrollment platform service and infrastructure to each State.

Response: We provided additional information in the proposed rule (87 FR 78272 through 78274), explaining the impact of stable contract cost estimates, the enhanced PTC subsidies in section 9661 of the ARP being extended in section 12001 of the IRA through the 2025 benefit year, anticipated effects of the IRA on enrollment, and States transitioning from FFEs or SBE–FPs to SBEs, as well as the enrollment impacts of section 1332 State innovation waivers. Additionally, we note that FFE and SBE–FP user fee costs are not allocated to or provided to each State. User fees cover activities performed by the Federal government that provide issuers offering a plan in an FFE or SBE–FP with a special benefit. As stated, these services are generally IT, eligibility, enrollment, and QHP certification services that are more efficiently conducted in a consolidated manner across the Federal platform, rather than by States, so that the services, service delivery, and infrastructure can be the same for all issuers in the FFEs and SBE–FPs. For example, all FFE and SBE–FP issuers send their 834 enrollment transactions to the Federal platform database, which are processed consistently regardless of State. Contracts are acquired to provide services for the Federal platform. The services do not differ by State, and therefore, we do not calculate costs on a State-by-State basis. Additionally, because HHS is not permitted to publicly provide information that is confidential due to trade secrets associated with contracting, there are limits in our ability to provide detailed information about our budget.

2. Publication of the 2024 Premium Adjustment Percentage, Maximum Annual Limitation on Cost Sharing, Reduced Maximum Annual Limitation on Cost Sharing, and Required Contribution Percentage in Guidance (§ 156.130)

As established in part 2 of the 2022 Payment Notice, we will publish the premium adjustment percentage, the required contribution percentage, maximum annual limitations on cost-sharing, and reduced maximum annual limitation on cost-sharing, in guidance annually starting with the 2023 benefit year. We did not propose to change the methodology for these parameters for the 2024 benefit year, and therefore, we published these parameters in guidance on December 12, 2022.[279]

3. Standardized Plan Options (§ 156.201)

In the HHS Notice of Benefit and Payment Parameters for 2024 proposed rule (87 FR 78206, 78274 through 78279), we proposed to exercise our authority under sections 1311(c)(1) and 1321(a)(1)(B) of the ACA to make several minor updates to our approach for standardized plan options for PY 2024 and subsequent PYs. Section 1311(c)(1) of the ACA directs the Secretary to establish criteria for the certification of health plans as QHPs. Section 1321(a)(1)(B) of the ACA directs the Secretary to issue regulations that set standards for meeting the requirements of title I of the ACA with respect to, among other things, the offering of QHPs through such Exchanges. We refer readers to the proposed rule (87 FR 78274 through 78275) for discussion of our prior and current standardized plan option policies.

First, in contrast to the policy finalized in the 2023 Payment Notice, we proposed, for PY 2024 and subsequent PYs, to no longer include a standardized plan option for the non-expanded bronze metal level. Accordingly, we proposed at new § 156.201(b) that for PY 2024 and subsequent PYs, FFE and SBE–FP issuers offering QHPs through the Exchanges must offer standardized QHP options designed by HHS at every product network type (as described in the definition of ''product'' at § 144.103), at every metal level except the non-expanded bronze level, and throughout every service area that they offer non-standardized QHP options. We proposed to re-designate the current regulation text at § 156.201 as paragraph (a) and revise it to apply only to PY 2023. Thus, for PY 2024 and subsequent PYs, we proposed standardized plan options for the following metal levels: one bronze plan that meets the requirement to have an AV up to 5 points above the 60 percent standard, as specified in § 156.140(c) (known as an expanded bronze plan), one standard silver plan, one version of each of the three income-based silver CSR plan variations, one gold plan, and one platinum plan.

As we explained in the proposed rule (87 FR 78276), we proposed to discontinue standardized plan options for the non-expanded bronze metal level mainly due to AV constraints. Specifically, we explained that it is not feasible to design a non-expanded bronze plan that includes any pre-deductible coverage while maintaining an AV within the permissible AV de minimis range for the non-expanded bronze metal level. Furthermore, we explained that few issuers chose to offer non-expanded bronze standardized plan options in PY 2023, with the majority of issuers offering bronze plans instead choosing to offer only expanded bronze standardized plan options. Thus, we explained that we believe that discontinuing non-expanded bronze standardized plan options would minimize burden without causing deleterious consequences. We also clarified that issuers would still be permitted to offer non-standardized plan options at the non-expanded bronze metal level, meaning consumers would still have the ability to choose these plan options, if they so choose. We further clarified that if an issuer offers a non-standardized plan option at the bronze metal level, whether expanded or non-expanded, it would need to also offer an expanded bronze standardized plan option.

Consistent with our approach in the 2023 Payment Notice, we did not propose standardized plan options for the Indian CSR plan variations as provided for at § 156.420(b), given that the cost-sharing parameters for these plan variations are already largely specified. We also explained that we would continue to require issuers to offer these plan variations for all standardized plan options offered, and we proposed to remove the regulation text language stating that standardized plan options for these plan variations are not required to clarify that while issuers must, under § 156.420(b), continue to offer such plan variations based on standardized plan options,

[279] *https://www.cms.gov/files/document/2024-papi-parameters-guidance-2022-12-12.pdf.*

those plan variations will themselves not be standardized plan options based on designs specified in this rulemaking.[280]

Similar to the approach taken in the 2023 Payment Notice, we proposed to create standardized plan options that resemble the most popular QHP offerings that millions are already enrolled in by selecting the most popular cost-sharing type for each benefit category; selecting enrollee-weighted median values for each of these benefit categories based on refreshed PY 2022 cost-sharing and enrollment data; modifying these plans to be able to accommodate State cost-sharing laws; and decreasing the AVs for these plan designs to be at the floor of each AV de minimis range primarily by increasing deductibles.

Furthermore, consistent with the approach taken in the 2023 Payment Notice, we proposed to create two sets of standardized plan options at the aforementioned metal levels, with the same sets of designs applying to the same sets of States as in the 2023 Payment Notice. Specifically, we proposed that the first set of standardized plan options would continue to apply to FFE and SBE–FP issuers in all FFE and SBE–FP States, excluding those in Delaware, Louisiana, and Oregon, and the second set of standardized plan options would continue to apply to Exchange issuers specifically in Delaware and Louisiana. See Table 9 and Table 10 for the two sets of standardized plan options we are finalizing for PY 2024.

In addition, since SBE–FPs use the same platform as the FFEs, we explained that we would continue to apply these standardized plan option requirements equally on FFEs and SBE–FPs. We explained that we continue to believe that differentiating between FFEs and SBE–FPs for the purposes of these requirements would create a substantial financial and operational burden that outweighs the benefit of permitting such a distinction.

Also, consistent with our policy in PY 2023, we stated that we would continue to apply these requirements to applicable issuers in the individual market but not in the small group market. We also explained that we would continue to exempt issuers offering QHPs through FFEs and SBE–FPs that are already required to offer standardized plan options under State action taking place on or before January 1, 2020, such as issuers in the State of Oregon,[281] from the requirement to offer the standardized plan options included in this rule.

In addition, we stated that we would continue to exempt issuers in SBEs from these requirements for several reasons. First, we explained that we did not wish to impose duplicative standardized plan option requirements on issuers in the eight SBEs that already have standardized plan option requirements. Additionally, we explained that we continue to believe that SBEs are best positioned to understand both the nuances of their respective markets and consumer needs within those markets. Finally, we explained that we continue to believe that States that have invested the necessary time and resources to become SBEs have done so to implement innovative policies that differ from those on the FFEs, and we do not wish to impede these innovative policies so long as they comply with existing legal requirements.

Furthermore, consistent with the policy finalized in the 2023 Payment Notice, we explained that we would continue to differentially display standardized plan options, including those standardized plan options required under State action taking place on or before January 1, 2020, on *HealthCare.gov* under the authority at § 155.205(b)(1). We further explained that we would also continue enforcement of the standardized plan options display requirements for approved web-brokers and QHP issuers using a direct enrollment pathway to facilitate enrollment through an FFE or SBE–FP—including both the Classic DE and EDE Pathways—at §§ 155.220(c)(3)(i)(H) and 156.265(b)(3)(iv), respectively. This means that these entities would continue to be required to differentially display the 2024 benefit year standardized plan options in accordance with the requirements under § 155.205(b)(1) in a manner consistent with how standardized plan options are displayed on *HealthCare.gov,* unless HHS approves a deviation. Consistent with our PY 2023 policy, we stated that any requests from web-brokers and QHP issuers seeking approval for an alternate differentiation format would continue to be reviewed based on whether the same or similar level of differentiation and clarity is being provided under the requested deviation as is provided on *HealthCare.gov.*

Consistent with the approach to plan designs in the 2023 Payment Notice, we explained that we would continue to use the following four tiers of prescription drug cost sharing in the proposed standardized plan options: generic drugs, preferred brand drugs, non-preferred brand drugs, and specialty drugs. We stated that we believe the use of four tiers of prescription drug cost-sharing in the standardized plan options would continue to allow for predictable and understandable drug coverage. We further explained that we believe the use of four tiers of prescription drug cost-sharing would play an important role in facilitating the consumer decision-making process by allowing consumers to more easily compare formularies between plans, and allow for easier year-to-year comparisons with their current plan.

We also explained that the continued use of four tiers would minimize issuer burden since, for PY 2023, issuers have already created standardized plan options with formularies that include only four tiers of prescription drug cost-sharing. We noted that we would consider including additional drug tiers for future years, and invited comment on the appropriate number of drug tiers to use in standardized plan options in the future. However, we explained that we would continue to use four tiers of prescription drug cost-sharing in standardized plan options for PY 2024 and subsequent PYs to maintain continuity with our approach to standardized plan options in PY 2023.

In addition, we noted concerns that issuers may not be including specific drugs at appropriate cost-sharing tiers for the standardized plan options; for example, that some issuers may be including brand name drugs in the generic drug cost-sharing tier, while others include generic drugs in the preferred or non-preferred brand drug cost-sharing tiers. We explained that we believe that consumers understand the difference between generic and brand name drugs, and that it is reasonable to assume that consumers expect that only generic drugs are covered at the cost-sharing amount in the generic drug cost-sharing tier, and that only brand name drugs are covered at the cost-sharing amount in the preferred or non-preferred brand drug cost-sharing tiers.

Accordingly, we proposed to revise § 156.201 to add a new paragraph (c) specifying that issuers of standardized plan options must (1) place all covered generic drugs in the standardized plan options' generic drug cost-sharing tier, or the specialty drug tier if there is an appropriate and non-discriminatory basis in accordance with § 156.125 for doing so, and (2) place all covered brand name drugs in either the standardized

[280] See QHP Certification Standardized Plan Options FAQs, *https://www.qhpcertification.cms.gov/s/Standardized%20Plan%20Options%20FAQs.*

[281] See Or. Admin. R. 836–053–0009.

plan options' preferred brand or non-preferred brand drug cost-sharing tiers, or the specialty drug tier if there is an appropriate and non-discriminatory basis in accordance with § 156.125 for doing so. For purposes of this proposal, ''non-discriminatory basis'' means there must be a clinical basis for placing a particular prescription drug in the specialty drug tier in accordance with § 156.125.

We also specified that within the Prescription Drug Template, for standardized plan options, issuers should enter zero cost preventive drugs for tier one, generic drugs for tier two, preferred brand drugs for tier three, non-preferred drugs for tier four, specialty drugs for tier five, and medical services drugs for tier six, if applicable.

We proposed the approach described in this section for PY 2024 and subsequent PYs for several reasons. To begin, we explained that we were continuing to require FFE and SBE–FP issuers to offer standardized plan options in large part due to continued plan proliferation, which has only increased since the standardized plan option requirements were finalized in the 2023 Payment Notice. We explained that with this continued plan proliferation, it is increasingly important to continue to attempt to streamline and simplify the plan selection process for consumers on the Exchanges. We stated that we believe these standardized plan options can continue to play a meaningful role in that simplification by reducing the number of variables that consumers have to consider when selecting a plan option, thus allowing consumers to more easily compare available plan options. More specifically, we explained that with these standardized plan options, consumers would continue to be able to take other meaningful factors into account, such as networks, formularies, and premiums, when selecting a plan option. We stated that we further believe these standardized plan options include several distinctive features, such as enhanced pre-deductible coverage for several benefit categories, that would continue to play an important role in reducing barriers to access, combatting discriminatory benefit designs, and advancing health equity. We explained that including enhanced pre-deductible coverage for these benefit categories would ensure consumers are more easily able to access these services without first meeting their deductibles. Furthermore, we explained that including copayments instead of coinsurance rates for a greater number of benefit categories would enhance consumer certainty and reduce the risk of unexpected financial harm sometimes associated with high coinsurance rates.

Additionally, given that insufficient time has passed to assess all the impacts of the standardized plan option requirements finalized in the 2023 Payment Notice, we proposed to maintain a high degree of continuity for many of the standardized plan option policies previously finalized to reduce the risk of disruption for all involved interested parties, including issuers, agents, brokers, States, and enrollees. We explained that we believe that making major departures from the methodology used to create the standardized plan options as finalized in the 2023 Payment Notice could result in drastic changes in these plan designs that could potentially create undue burden for these interested parties. Furthermore, we explained that if these standardized plan options vary significantly from year to year, those enrolled in these plans could experience unexpected financial harm if the cost-sharing for services they rely upon differs substantially from the previous year. We stated that, ultimately, we believe that consistency in standardized plan options is important to allow both issuers and enrollees to become accustomed to these plan designs.

We sought comment on our proposed approach to standardized plan options for PY 2024 and subsequent PYs.

BILLING CODE 4120–01–P

TABLE 9: 2024 Standardized Plan Options Set One (For All FFE and SBE-FP Issuers, Excluding Issuers in Delaware, Louisiana, and Oregon)

	Expanded Bronze	Standard Silver	Silver 73 CSR	Silver 87 CSR	Silver 94 CSR	Gold	Platinum
Actuarial Value	64.39%	70.01%	73.00%	87.03%	94.06%	78.02%	88.10%
Deductible	$7,500	$5,900	$5,700	$700	$0	$1,500	$0
Annual Limitation on Cost Sharing	$9,400	$9,100	$7,200	$3,000	$1,800	$8,700	$3,200
Emergency Room Services	50%	40%	40%	30%	25%*	25%	$100*
Inpatient Hospital Services (Including Mental Health & Substance Use Disorder**)**	50%	40%	40%	30%	25%*	25%	$350*
Primary Care Visit	$50*	$40*	$40*	$20*	$0*	$30*	$10*
Urgent Care	$75*	$60*	$60*	$30*	$5*	$45*	$15*
Specialist Visit	$100*	$80*	$80*	$40*	$10*	$60*	$20*
Mental Health & Substance Use Disorder **Outpatient *Office Visit***	$50*	$40*	$40*	$20*	$0*	$30*	$10*
Imaging (CT/PET Scans, MRIs)	50%	40%	40%	30%	25%*	25%	$100*
Speech Therapy	$50*	$40*	$40*	$20*	$0*	$30*	$10*
Occupational, Physical Therapy	$50*	$40*	$40*	$20*	$0*	$30*	$10*
Laboratory Services	50%	40%	40%	30%	25%*	25%	$30*
X-rays/Diagnostic Imaging	50%	40%	40%	30%	25%*	25%	$30*
Skilled Nursing Facility	50%	40%	40%	30%	25%*	25%	$150*
Outpatient Facility Fee (Ambulatory Surgery Center)	50%	40%	40%	30%	25%*	25%	$150*
Outpatient Surgery Physician & Services	50%	40%	40%	30%	25%*	25%	$150*
Generic Drugs	$25*	$20*	$20*	$10*	$0*	$15*	$5*
Preferred Brand Drugs	$50	$40*	$40*	$20*	$15*	$30*	$10*
Non-Preferred Brand Drugs	$100	$80	$80	$60	$50*	$60*	$50*
Specialty Drugs	$500	$350	$350	$250	$150*	$250*	$150*

*Benefit category not subject to the deductible.

TABLE 10: 2024 Standardized Plan Options Set Two (For Exchange Issuers in Delaware and Louisiana)

	Expanded Bronze	Standard Silver	Silver 73 CSR	Silver 87 CSR	Silver 94 CSR	Gold	Platinum
Actuarial Value	64.39%	70.01%	73.00%	87.04%	94.08%	78.04%	88.11%
Deductible	$7,500	$5,900	$5,700	$700	$0	$1,500	$0
Annual Limitation on Cost Sharing	$9,400	$9,100	$7,200	$3,000	$1,900	$8,700	$3,200
Emergency Room Services	50%	40%	40%	30%	25%*	25%	$100*
Inpatient Hospital Services (Including Mental Health & Substance Use Disorder)	50%	40%	40%	30%	25%*	25%	$350*
Primary Care Visit	$50*	$40*	$40*	$20*	$0*	$30*	$10*
Urgent Care	$75*	$60*	$60*	$30*	$5*	$45*	$15*
Specialist Visit	$100*	$80*	$80*	$40*	$10*	$60*	$20*
Mental Health & Substance Use Disorder **Outpatient *Office Visit***	$50*	$40*	$40*	$20*	$0*	$30*	$10*
Imaging (CT/PET Scans, MRIs)	50%	40%	40%	30%	25%*	25%	$100*
Speech Therapy	$50*	$40*	$40*	$20*	$0*	$30*	$10*
Occupational, Physical Therapy	$50*	$40*	$40*	$20*	$0*	$30*	$10*
Laboratory Services	50%	40%	40%	30%	25%*	25%	$30*
X-rays/Diagnostic Imaging	50%	40%	40%	30%	25%*	25%	$30*
Skilled Nursing Facility	50%	40%	40%	30%	25%*	25%	$150*
Outpatient Facility Fee (Ambulatory Surgery Center)	50%	40%	40%	30%	25%*	25%	$150*
Outpatient Surgery Physician & Services	50%	40%	40%	30%	25%*	25%	$150*
Generic Drugs	$25*	$20*	$20*	$10*	$0*	$15*	$5*
Preferred Brand Drugs	$50	$40*	$40*	$20*	$5*	$30*	$10*
Non-Preferred Brand Drugs	$100	$80	$80	$60	$10*	$60*	$50*
Specialty Drugs	$150	$125	$125	$100	$20*	$100*	$75*

*Benefit category not subject to the deductible.

BILLING CODE 4120–01–C

After reviewing public comments, we are finalizing our proposed policies with respect to standardized plan options for PY 2024 and subsequent PYs, as proposed, except as follows. First, we are not finalizing the proposed requirement that issuers of standardized plan options must (1) place all covered generic drugs in the standardized plan options' generic drug cost-sharing tier, or the specialty drug tier if there is an appropriate and non-discriminatory basis in accordance with § 156.125 for doing so, and (2) place all covered brand name drugs in either the standardized plan options' preferred brand or non-preferred brand drug cost-sharing tiers, or the specialty drug tier if there is an appropriate and non-discriminatory basis in accordance with § 156.125 for doing so.

Additionally, we note that both of the standard silver plan designs finalized in this rule, as set forth in Tables 9 and 10 above, differ slightly from the corresponding plan designs in the proposed rule (87 FR 78278 through 78279). Specifically, in this final rule, for both of these standard silver plans, we are reducing the deductible by $100 from $6,000 to $5,900, which increases the AV for these plans from 70.00 percent to 70.01 percent. We are making this change to rectify an error in our use of the proposed AV Calculator and Plans and Benefits Template. Specifically, the proposed AV Calculator produced an AV output of 69.998 percent for both of these standard silver plans.

However, the proposed AV Calculator rounds to only two decimal places, which resulted in the AV output for both of these plans being rounded up to 70.00 percent. With a permissible AV de *minimis range* for the standard silver metal level of 70.00 percent to 72.00 percent, these standard silver plans (with an unrounded AV of 69.998 percent) would have failed the AV *de minimis* range validation within the Plans and Benefits Template, meaning issuers would not have been able to successfully submit these plans during QHP certification. We designed these plans to have AVs near the floor of each *de minimis* range to ensure competitive premiums for these plans. Slightly modifying the deductibles for these plans ensures that they will continue to have competitive premiums and AVs within the permissible AV *de minimis* range. All other aspects of these plan designs remain unchanged from the corresponding plan designs in the

proposed rule. Given that the same rounding logic is present in the final AV Calculator and the final Plans and Benefits Template, we note that this change must also be made in the final versions of each of these tools.

We summarize and respond to public comments received on the proposed policies with respect to standardized plan options below.

Comment: Many commenters expressed support for continuing to require FFE and SBE–FP issuers to offer standardized plan options. These commenters explained that standardized plan options serve an important role in simplifying the plan selection process for consumers purchasing health insurance through the Exchanges. These commenters also explained that the plan selection process could be further simplified if the requirement for issuers to offer standardized plan options were paired with the proposed requirements in § 156.202 in the proposed rule to reduce the risk of plan choice overload by either directly limiting the number of non-standardized plan options that issuers can offer through the Exchanges or by implementing a meaningful difference standard.

These commenters explained that the continued emphasis on efforts to further simplify the plan selection process is especially important given the continued proliferation of available plan choices offered through the Exchanges, as was described in greater detail in § 156.202 of the preamble of the proposed rule (87 FR 78279 through 78283). Commenters further explained that having an overwhelming number of plan choices to consider during the plan selection process significantly exacerbates the risk of plan choice overload, which also increases the risk of suboptimal plan selection and unexpected financial harm. Commenters thus explained that continuing to require issuers to offer these standardized plan options would act as one prong in a multi-pronged strategy to meaningfully simplify the plan selection process, thereby reducing the risk of suboptimal plan selection and unexpected financial harm to consumers.

Commenters who supported continuing to require issuers to offer standardized plan options also explained that the standardized plan options included in the proposed rule also contain several distinctive features, such as enhanced pre-deductible coverage for a wide range of benefit categories, including primary care visits, urgent care visits, specialist visits, mental health and substance use disorder outpatient office visits, speech therapy, occupational therapy, physical therapy, and generic drugs. Commenters explained that the enhanced pre-deductible coverage for these benefit categories would continue to serve an important role in reducing barriers to access for services critical to health. Commenters supportive of these standardized plan options also explained that including copayments instead of coinsurance rates as the form of cost sharing for as many benefit categories as possible would continue to enhance the predictability of costs for consumers enrolled in these plans, thus further reducing the risk of unexpected financial harm.

Conversely, several commenters opposed continuing to require issuers to offer these standardized plan options. These commenters explained that QHPs are sufficiently standardized due to requirements pertaining to EHB, annual limitations on cost sharing, metal tiers, and the recently narrowed AV *de minimis* ranges for each metal tier. These commenters also explained that continuing to require issuers to offer these standardized plan options would inhibit issuer innovation in plan design, reducing the degree of consumer choice. Several commenters also noted that requiring issuers to offer standardized plan options in PY 2023 contributed to the sharp increase in plans offered during this past Open Enrollment, which further increased the risk of plan choice overload.

Response: We agree that continuing to require issuers to offer these standardized plan options will serve an important role in simplifying the plan selection process, especially when done in conjunction with reducing the risk of plan choice overload by directly limiting the number of non-standardized plan options that issuers can offer as well as with further enhancing and optimizing choice architecture and the consumer experience on *HealthCare.gov.* We agree with commenters that simplifying the plan selection process will reduce the risk of suboptimal plan selection and unexpected financial harm to consumers. We also agree that the enhanced pre-deductible coverage and the inclusion of copayments instead of coinsurance rates for a broad range of benefit categories in these standardized plan options will continue to serve as important forms of consumer protection.

We further believe that this additional degree of standardization—beyond the existing requirements pertaining to EHB, annual limitations on cost sharing, metal tiers, and the recently narrowed AV *de minimis* ranges for each metal tier—for plans offered through the Exchanges is warranted given the continued proliferation of available plan choices offered through the Exchanges, a stable trend that has continued unabated for several years. We believe the overwhelming number of plan choices necessitates taking measures to further simplify the consumer experience in order to reduce the risk of suboptimal plan selection.

We acknowledge that requiring issuers to offer these standardized plan options contributed to the increase in the total number of plans offered through the Exchanges. However, we note that in the 2023 Payment Notice (87 FR 27318), we encouraged issuers to modify their existing non-standardized plan offerings—in accordance with uniform modification requirements at § 147.106(e)—to conform with the cost-sharing parameters of the standardized plan options finalized in the 2023 Payment Notice in order to significantly reduce the number of total new plan offerings on the Exchanges. We reiterate this encouragement.

Additionally, since these standardized plan options contain several distinctive benefits, such as enhanced pre-deductible coverage and a preference for copayments instead of coinsurance rates, and since we believe these standardized plan options play an important role in simplifying the plan selection process, we believe limiting the number of non-standardized plan options that issuers can offer will offset this increase in the number of total plan offerings.

Finally, we disagree that continuing to require issuers to offer these standardized plan options will inhibit issuer innovation in plan design and reduce consumer choice. First, given that issuers will still be permitted to offer two non-standardized plan options per product network type, metal level, inclusion of dental or vision benefit coverage, and service area, we believe that issuers will continue to have sufficient flexibility to innovate and that consumers will continue to retain a satisfactory degree of choice.

Additionally, as is explained in greater detail in the section of the preamble to this rule addressing § 156.202, a 2016 report by the RAND Corporation reviewing over 100 studies concluded that having too many health plan choices can lead to poor enrollment decisions due to the difficulty consumers face in processing complex health insurance information.[282] We also referred to a

[282] Taylor EA, Carman KG, Lopez A, Muchow AN, Roshan P, and Eibner C. Consumer

study of consumer behavior in Medicare Part D, Medicare Advantage, and Medigap that demonstrated that a choice of 15 or fewer plans was associated with higher enrollment rates, while a choice of 30 or more plans led to a decline in enrollment rates.[283] As we note in the section of the preamble to this rule addressing § 156.202, with the limit we are finalizing on the number of non-standardized plans that may be offered, we estimate (based on Plan Year 2023 data) that the weighted average number of non-standardized plan options (which does not take into consideration standardized plan options) available to each consumer will be reduced from approximately 89.5 in PY 2023 to 66.3 in PY 2024, while the weighted average total number of plans (which includes both standardized and non-standardized plan options) available to each consumer will be reduced from approximately 113.7 in PY 2023 to 90.5 in PY 2024, which we believe will still provide consumers a satisfactory degree of choice and will continue to allow them to select a plan that meets their unique health needs.

Altogether, we believe the standardized plan option requirements at § 156.201 in conjunction with the non-standardized plan option limits at § 156.202 will meaningfully enhance consumer choice by allowing consumers to more easily and meaningfully compare available plan choices by reducing the risk of plan choice overload.

Comment: Many commenters supported maintaining a high degree of continuity in both the broader policy approach as well as in specific plan designs from the previous plan year. These commenters explained that maintaining a consistent approach between plan years would maintain predictability for consumers currently enrolled in these plans. These commenters further explained that introducing drastic changes in the plan designs would unnecessarily risk disruption for issuers, states, and enrollees.

Response: We agree that maintaining the highest degree of continuity possible in both the broader approach, as well as in the specific plan designs from the previous plan year is highly desirable, mainly in order to maintain predictability, to minimize the risk of disruption for issuers, States and enrollees, and to minimize issuer burden.

Comment: Many commenters expressed concerns about several aspects of these plan designs. Specifically, several commenters expressed concern about the high deductibles for these plans. These commenters explained that having high deductibles acts as a significant barrier that makes it more difficult for consumers to obtain the care they need. Thus, many commenters recommended lowering the deductibles for these plans in order to decrease barriers to access. Commenters also emphasized the need to expand pre-deductible coverage to a broader range of benefit categories, including laboratory services, x-rays and diagnostic imaging, outpatient facility fees, outpatient surgery physician fees, and more tiers of prescription drug coverage.

Response: We agree that high deductibles can act as a barrier to obtaining health care services, and that expanding pre-deductible coverage to a broader range of benefit categories would help to expand access to health care services. However, to ensure these plans have design attributes that reflect the most popular plan offerings, to maintain reasonable cost sharing amounts, to continue exempting benefit categories that contain some of the most frequently utilized health care services from the deductible, and to ensure these plans have competitive premiums, all the while maintaining an AV within the permissible AV *de minimis* range, we are unable to materially lower the deductibles or exempt additional benefit categories from the deductibles in these plan designs. We note that we will consider these modifications in future PYs.

Comment: Several commenters supported excluding plan designs for standardized plan options at the non-expanded bronze metal level. These commenters explained that excluding non-expanded bronze plan designs would reduce issuer and State burden, as there would be fewer plans for issuers to offer and for States to certify. These commenters also explained that the non-expanded bronze plan standardized plan options finalized in the 2023 Payment Notice did not include pre-deductible coverage for any services, which places consumers at risk of unexpected financial harm. Additionally, commenters explained that issuers generally chose to offer standardized plan options at the expanded bronze metal level instead of the non-expanded bronze metal level in PY 2023 since these plans included pre-deductible coverage for a range of benefit categories.

Conversely, several commenters opposed excluding plan designs for standardized plan options at the non-expanded bronze metal level, explaining that consumers currently enrolled in these low-cost plans would lose access to their current plan offerings.

Response: We agree that excluding plan designs for standardized plan options at the non-expanded bronze metal level will reduce issuer and State burden with minimal consumer harm since these plan designs contain no pre-deductible coverage. In addition, as noted in the proposed rule, few issuers chose to offer non-expanded bronze standardized plan options in PY 2023. We also note that although consumers currently enrolled in standardized plan options at the non-expanded bronze metal level would lose access to their current plan offering, these consumers could continue to have access to non-standardized plan options at the non-expanded bronze metal level, if the issuer continues to offer such a plan. We believe non-standardized plan options at the non-expanded bronze metal level would be appropriate replacements for consumers' current standardized plan offerings at that level since there is little material difference between a standardized plan option at the non-expanded bronze metal level and a non-standardized plan option at the non-expanded bronze metal level—primarily due to severe AV constraints.

Comment: Several commenters supported continuing to include only four tiers of prescription drug cost sharing in the formularies of the standardized plan options. These commenters generally explained that doing so would allow consumers to better understand their drug coverage, thereby reducing the risk of unexpected financial harm. These commenters also noted that the continuity in this aspect of the plan designs is highly desirable for consumers, and that this would further minimize the risk of disruption for these consumers.

Conversely, several commenters supported including more than four tiers of prescription drug cost sharing in the formularies of the standardized plan options. These commenters instead recommended permitting the inclusion of five or six tiers, explaining that this formulary structure is common practice in the commercial market. These commenters explained that including additional tiers of cost sharing in these formularies would promote competition among manufacturers for favorable formulary placement, thus reducing costs for consumers.

Decisionmaking in the Health Care Marketplace. RAND Corporation. 2016.

[283] Chao Zhou and Yuting Zhang, ''The Vast Majority of Medicare Part D Beneficiaries Still Don't Choose the Cheapest Plans That Meet Their Medication Needs.'' Health Affairs, 31, no.10 (2012): 2259–2265.

Response: While we acknowledge that the inclusion of five or six tiers in formularies is common practice in the commercial market, we believe the advantages of maintaining four tiers in these standardized plan option formularies outweigh the advantages of permitting additional tiers at this time. Specifically, we agree that continuing to include only four tiers of prescription drug cost sharing in the formularies of these standardized plan options will continue to allow for more predictable and understandable drug coverage, thereby reducing the risk of unexpected financial harm for consumers enrolled in these plans.

Additionally, we believe that not finalizing the proposed formulary tiering placement regulations that would have required issuers to place all covered generic drugs in the generic cost-sharing tier and all brand drugs in either the preferred or non-preferred brand cost-sharing tier (or the specialty cost-sharing tier, with an appropriate and non-discriminatory basis) (as discussed later in this section) for PY 2024 will continue to facilitate competition among manufacturers for favorable formulary placement, reducing costs for consumers, which we believe is especially important given the other significant policies finalized in this rule.

We also note that the four-tier design feature is consistent with the plan designs for PY 2023. As noted in the proposed rule (87 FR 78277), we believe that the use of four tiers plays an important role in facilitating the consumer decision making process by allowing consumers to more easily compare formularies between plans, and allows for easier year-to-year comparison with their current plan. Thus, in order to minimize the degree of disruption for enrollees, we will continue to include only four tiers of prescription drug cost-sharing (excluding the zero-cost share preventive drugs and the medical services drugs cost-sharing tiers) in these standardized plan options for PY 2024.

Comment: Several commenters supported requiring issuers to place all covered generic drugs in the generic drug cost sharing tier and all covered brand drugs in either the preferred brand or non-preferred brand drug cost sharing tiers—or the specialty tier, with an appropriate and non-discriminatory basis—in the standardized plan options. These commenters explained that introducing such a requirement would enhance predictability for consumers and allow them to anticipate the expected costs for prescription drugs, which would further decrease the risk of unexpected financial harm. Commenters further explained that this requirement would act as an important step in ensuring that patients are not forced to overpay for low-cost generic prescription drugs.

Several commenters further explained that generic drugs are a major source of cost savings for patients and systems. These commenters cited recent analyses that demonstrated that generics comprise roughly 91 percent of prescriptions yet only account for 18.2 percent of prescription drug spending. These commenters also cited analyses that demonstrated that generics save hundreds of billions of dollars in prescription drug spending overall, with demonstrated patient savings of $373 billion in 2021. These commenters also explained how the number of generic drugs covered on generic cost sharing tiers has been steadily decreasing over the years. These commenters explained that as recently as 2016, 65 percent of generic drugs were covered on generic tiers, but in 2022, only 43 percent of generic drugs were covered on generic tiers—a decrease of 22 percent in just six years.

Conversely, several commenters opposed requiring issuers to place all covered generic drugs in the generic drug cost sharing tier and all covered brand drugs in either the preferred brand or non-preferred brand drug cost sharing tiers—or the specialty tier, with an appropriate and non-discriminatory basis—in these standardized plan options.

Specifically, commenters explained that there are numerous examples of high-cost generic prescription drugs that have lower-cost, clinically similar brand-name prescription alternatives. Similarly, commenters explained that there are brand-name prescription drugs that may offer clinical and financial value that supports tiering lower than the preferred brand tier. Thus, commenters explained that the traditional viewpoint that generic drugs are the lowest-cost or highest value option is not always necessarily the case. Commenters further stated that it is commonplace in all market segments to shift generics to lower tiers only at the point where they become the most cost-effective option. Commenters also explained that the purpose of tiered formularies is to encourage the use of high value drugs—not to encourage the use of generic drugs, per se, especially since generic prescription drugs are no longer consistently inexpensive or high-value.

In addition, several commenters expressed concern that requiring brand prescription drugs to be placed on a higher cost sharing tier could result in decreased medication adherence, which would be especially detrimental for consumers with chronic conditions that require treatment with brand-name prescription drugs (such as asthma medications and insulin). Moreover, several commenters noted that this policy would force the placement of clinically inappropriate and high-priced prescription drugs on lower tiers, thus undermining the work of Pharmacy & Therapeutics Committees that considers multiple factors when deciding the tier on which to place each prescription drug.

Several commenters also expressed concern that this requirement would incentivize manufacturers to take advantage of mandatory tier placement by raising the cost of certain drugs. Similarly, several commenters expressed concern that this requirement would limit PBM flexibility to effectively manage formularies and enrollee drug spending, as well as PBM and issuer position in negotiations with manufacturers.

Moreover, these commenters were concerned that this policy could lead to more administrative costs and may require issuers to maintain two sets of formularies for standardized and non-standardized plan options, and that this may lead to more confusion for consumers. Ultimately, several commenters noted that this policy may have the unintended effect of increasing costs for consumers through the cost of each tier with higher out-of-pocket costs, cost-sharing, and the price of premiums.

Response: We agree that requiring generic prescription drugs to be placed in the generic drug cost sharing tier and brand drugs in the preferred or non-preferred brand drug cost sharing tiers (or the specialty tier, with an appropriate and non-discriminatory basis) would enhance predictability for consumers and could potentially result in patient cost savings. However, comments regarding the changing nature of the costs of brand name drugs and generics, flexibility in designing formularies, and decreased medication adherence have led us to determine that we should further investigate the potential impact of this proposed requirement. For example, we believe that there may be merit in examining drug tiering more broadly, and not just as related to standardized plan options. Furthermore, as noted earlier in this section, we value maintaining the highest degree of continuity possible in both the broader approach, as well as in the specific plan designs from the

previous plan year and we intend to minimize disruption while still improving on our policies. As such, we are not finalizing this requirement for PY 2024, but we intend to conduct further investigation for future PYs.

Comment: Several commenters had specific recommendations regarding the manner in which these standardized plan options are displayed as well as broader aspects of choice architecture and the user experience on *HealthCare.gov.*

Specifically, several commenters recommended including a more granular level of detail to highlight important differences between plans, such as by displaying both the product ID and network ID of plans. Additionally, several commenters underscored the need to streamline the plan selection process by adding more filters and sort orders to highlight innovative plan designs and plans with supplemental benefits, to prioritize lower deductible plans, or to prioritize plans with particular cost sharing types and amounts. Several commenters recommended including additional screener questions to assess consumer preferences for cost, providers, prescription drugs, utilization, and cost-sharing assistance. Several commenters recommended including display features that would further facilitate consumer education and understanding, such as through pop-ups on screen and accompanying explanatory messages clarifying what distinguishes ''Easy Pricing'' plans from non-standardized plan options.

Finally, several commenters explained that enhancing choice architecture and the user experience on *HealthCare.gov* would be a more effective and less disruptive method to simplify the plan selection process and facilitate consumer decision-making than limiting the number of non-standardized plan options that issuers can offer through the Exchanges.

Response: We appreciate the commenters' recommendations and will take them into consideration. We agree that enhancing choice architecture and the user experience on *HealthCare.gov* can serve an important role in simplifying the plan selection process, but we also believe that these enhancements must be made in conjunction with other steps—such as enhancing comparability by requiring issuers to offer standardized plan options, and by reducing the risk of plan choice overload by limiting the number of non-standardized plan options that issuers can offer. Ultimately, we believe that multifaceted problems such as plan choice overload, suboptimal plan selection, and unexpected financial harm are best mitigated through multifaceted approaches.

4. Non-Standardized Plan Option Limits (§ 156.202)

In the HHS Notice of Benefit and Payment Parameters for 2024 proposed rule (87 FR 78206, 78279), we proposed to exercise the authority under sections 1311(c)(1) and 1321(a)(1)(B) of the ACA to add § 156.202 to limit the number of non-standardized plan options that issuers of QHPs can offer through Exchanges on the Federal platform (including State-based Exchanges on the Federal Platform) to two non-standardized plan options per product network type (as described in the definition of ''product'' at § 144.103) and metal level (excluding catastrophic plans), in any service area, for PY 2024 and beyond, as a condition of QHP certification. Section 1311(c)(1) of the ACA directs the Secretary to establish criteria for the certification of health plans as QHPs. Section 1321(a)(1)(B) of the ACA directs the Secretary to issue regulations that set standards for meeting the requirements of title I of the ACA for, among other things, the offering of QHPs through such Exchanges.

In the proposed rule (87 FR 78279), we explained that under this proposed limit, an issuer would, for example, be limited to offering through an Exchange two gold HMO and two gold PPO non-standardized plan options in any service area in PY 2024 or any subsequent PY. As an additional clarifying example, we explained that if an issuer wanted to offer two Statewide bronze HMO non-standardized plan options, as well as two additional bronze HMO non-standardized plan options in one particular service area that covers less than the entire State, in the service areas that all four plans would cover, the issuer could choose to offer through the Exchange either the two bronze HMO non-standardized plan options offered Statewide or the two bronze HMO non-standardized plan options offered in that particular service area (or any combination thereof, so long as the total number of non-standardized plan options does not exceed the limit of two per issuer, product network type, and metal level in the service area).

Similar to the approach taken with respect to standardized plan options in the 2023 Payment Notice and in this final rule, we proposed to not apply this requirement to issuers in SBEs for several reasons. First, we explained that we did not wish to impose duplicative requirements on issuers in the SBEs that already limit the number of non-standardized plan options. Additionally, we stated that we believe that SBEs are best positioned to understand both the nuances of their respective markets and consumer needs within those markets. Finally, we explained that we believe that States that have invested the necessary time and resources to become SBEs have done so to implement innovative policies that differ from those on the FFEs, and that we did not wish to impede these innovative policies, so long as they comply with existing legal requirements.

Also, consistent with the approach taken for standardized plan options in the 2023 Payment Notice and in this this final rule, since SBE–FPs use the same platform as the FFEs, we proposed to apply this requirement equally on FFEs and SBE–FPs. We explained that we believe that proposing a distinction between FFEs and SBE–FPs for purposes of this requirement would create a substantial financial and operational burden that we believe outweighs the benefit of permitting such a distinction.

Finally, also in alignment with the approach taken with respect to standardized plan options in the 2023 Payment Notice and this final rule, we proposed that this requirement would not apply to plans offered through the SHOPs or to SADPs, given that the nature of these markets differ substantially from the individual medical QHP market, in terms of issuer participation, plan offerings, plan enrollment, and services covered. For example, we explained that the degree of plan proliferation observed in individual market medical QHPs over the last several plan years is not evident to the same degree for QHPs offered through the SHOPs or for SADPs offered in the individual market. For these reasons, we stated that we do not believe the same requirements should be applied to these other markets.

We also explained that we believe that given the large number of plan offerings that would continue to exist on the Exchanges, a sufficiently diverse range of plan offerings would still exist for consumers to continue to select innovative plans that meet their unique health needs, even if we did ultimately choose to limit the number of non-standardized plan options that issuers can offer. Thus, we stated that even if consumers believe that their health needs may not be best met with the standardized plan options included in this current rulemaking, they would still have the option to select from a sufficient number of other non-standardized plan options.

We stated in the proposed rule (87 FR 78280) that, under this proposed limit, we estimated that the weighted average number of non-standardized plan options (which does not take into consideration standardized plan options) available to each consumer would be reduced from approximately 107.8 in PY 2022 to 37.2 in PY 2024, which we stated we believe would still provide consumers with a sufficient number of plan offerings.[284] Furthermore, we estimated that approximately 60,949 of a total 106,037 non-standardized plan option plan-county combinations offered in PY 2022 (amounting to 57.5 percent of non-standardized plan option plan-county combinations) would be discontinued as a result of this limit, a number we stated would still provide consumers with a sufficient degree of choice during the plan selection process.[285]

Finally, we stated that if this limit were adopted, we estimated that of the approximately 10.21 million enrollees in the FFEs and SBE–FPs in PY 2022, approximately 2.72 million (26.6 percent) of these enrollees would have their current plan offerings affected, and issuers would therefore be required to select another QHP to crosswalk these enrollees into for PY 2024.[286] We also explained that we would utilize the existing discontinuation notices and process as well as the current re-enrollment hierarchy at § 155.335(j) to ensure a seamless transition and continuity of coverage for affected enrollees. In addition, we explained that we would ensure that the necessary consumer assistance would be made available to affected enrollees as part of the expanded funding for Navigator programs.

In the 2023 Payment Notice, we also solicited comment on enhancing choice architecture and on preventing plan choice overload for consumers on *HealthCare.gov* (87 FR 689 through 691 and 87 FR 27345 through 27347). In this comment solicitation, we noted that although we continue to prioritize competition and choice on the Exchanges, we were concerned about plan choice overload, which can result when consumers have too many choices in plan options on an Exchange. We referred to a 2016 report by the RAND Corporation reviewing over 100 studies which concluded that having too many health plan choices can lead to poor enrollment decisions due to the difficulty consumers face in processing complex health insurance information.[287] We also referred to a study of consumer behavior in Medicare Part D, Medicare Advantage, and Medigap that demonstrated that a choice of 15 or fewer plans was associated with higher enrollment rates, while a choice of 30 or more plans led to a decline in enrollment rates.[288]

With this concern in mind, we explained in the 2023 Payment Notice that we were interested in exploring possible methods of improving choice architecture and preventing plan choice overload. We expressed interest in exploring the feasibility and utility of limiting the number of non-standardized plan options that FFE and SBE–FP issuers can offer through the Exchanges in future plan years as one option to reduce the risk of plan choice overload and to further streamline and optimize the plan selection process for consumers on the Exchanges. Accordingly, we sought comment on the impact of limiting the number of non-standardized plan options that issuers can offer through the Exchanges, on effective methods to achieve this goal, the advantages and disadvantages of these methods, and if there were alternative methods not considered.

In response to this comment solicitation, many commenters agreed that the number of plan options that consumers can choose from on the Exchanges has increased beyond a point that is productive for consumers. Many of these commenters further explained that consumers do not have the time, resources, or health literacy to be able to meaningfully compare all available plan options. These commenters also agreed that when consumers are faced with an overwhelming number of plan options, many of which are similar with only minor differences between them, the risk of plan choice overload is significantly exacerbated.

Similarly, in the proposed rule (87 FR 78280 through 78281), we noted that during the standardized plan option interested party engagement sessions we conducted after publishing the 2023 Payment Notice, many participants agreed that the number of plan options was far too high and supported taking additional action to prevent plan choice overload. In short, many 2023 Payment Notice commenters and interested party engagement participants supported limiting the number of non-standardized plan options that issuers can offer to streamline the plan selection process for consumers on the Exchanges.

In addition, we explained in the proposed rule (87 FR 78281) that QHP submission data supports the argument that enacting such a limit would be beneficial for consumers, noting that there has been a sizeable increase in the weighted average number of plans available per enrollee and plans offered per issuer in recent years. We refer readers to the proposed rule further discussion. With this continued plan proliferation for both enrollees and issuers, we explained that we believe that limiting the number of non-standardized plan options that FFE and SBE–FP issuers of QHPs can offer through the Exchanges beginning in PY 2024 could greatly enhance the consumer experience on *HealthCare.gov.*

We also stated in the proposed rule (87 FR 78281) that to reduce the risk of plan choice overload, we also considered solely focusing on enhancing choice architecture on *HealthCare.gov,* instead of enhancing choice architecture in conjunction with limiting the number of non-standardized plan options that issuers can offer, an approach recommended by several commenters in the 2023 Payment Notice. We explained that we agree that enhancements to the consumer experience on *HealthCare.gov* are critical in ensuring that consumers are able to more meaningfully compare plan choices and more easily select a health plan that meets their unique health needs. As such, we stated that we made several enhancements to *HealthCare.gov* for the open enrollment period for PY 2023. We also explained

[284] Utilizing weighted as opposed to unweighted averages takes into consideration the number of enrollees in a particular service area when calculating the average number of plans available to enrollees. As a result of weighting by enrollment, service areas with a higher number of enrollees have a greater impact on the overall average than service areas with a lower number of enrollees. Weighting averages allows a more representative metric to be calculated that more closely resembles the actual experience of enrollees.

[285] Plan-county combinations are the count of unique plan ID and Federal Information Processing Series (FIPS) code combinations. This measure is used because a single plan may be available in multiple counties, and specific limits on non-standardized plan options may have different impacts on one county where there are four plans of the same product network type and metal level versus another county where there are only two plans of the same product network type and service area, for example.

[286] These calculations assumed that the non-standardized plan options removed due to the proposed limit would be those with the fewest enrollees based on PY 2022 data, which includes individual market medical QHPs for Exchanges using the *HealthCare.gov* eligibility and enrollment platform, including SBE–FPs.

[287] Taylor EA, Carman KG, Lopez A, Muchow AN, Roshan P, and Eibner C. Consumer Decisionmaking in the Health Care Marketplace. RAND Corporation. 2016.

[288] Chao Zhou and Yuting Zhang, ''The Vast Majority of Medicare Part D Beneficiaries Still Don't Choose the Cheapest Plans That Meet Their Medication Needs.'' Health Affairs, 31, no.10 (2012): 2259–2265.

that we intend to continue conducting research to inform further enhancements to the consumer experience on *HealthCare.gov* for PY 2024 and subsequent PYs.

That said, we explained that we believe that enhancing choice architecture on *HealthCare.gov* is necessary but, alone, insufficient to reduce the risk of plan choice overload for several reasons. First, we stated that *HealthCare.gov* is not the only pathway for consumers to search for, compare, select, and enroll in a QHP, and it is not the only information resource consumers seek when considering Exchange coverage. Instead, we noted that consumers shop through a multitude of channels, sometimes utilizing a mix of customer service channels including the Marketplace Call Center; online on *HealthCare.gov;* through assisters, agents, and brokers; and through certified enrollment partners (such as Classic DE and EDE web brokers and issuers). Thus, we explained that we believe consumers enrolling in QHPs through these alternative pathways would not benefit to the same degree as those enrolling through *HealthCare.gov* if we focused on reducing plan choice overload solely by making enhancements to *HealthCare.gov.* Moreover, considering that an increasingly greater portion of QHP enrollment is occurring through these alternative enrollment pathways, we explained that we believe a more comprehensive approach to reducing plan choice overload that would also benefit those utilizing these alternative enrollment pathways was required.

Furthermore, we explained that while making enhancements to choice architecture and the plan comparison experience can play a critical role in streamlining the plan selection process and reducing the risk of plan choice overload, the number of plans available per enrollee has increased beyond a number that is beneficial for consumers, and this high number of plan choices makes it increasingly difficult to meaningfully manage choice architecture on *HealthCare.gov* and through other Exchange customer service channels.

Relatedly, we explained that we believe low-income consumers would particularly benefit from a policy that limits the number of plans. This is because silver plans deliver the most value to low-income consumers, but it is exactly these consumers—who often have the lowest health insurance literacy—who now face choosing among the highest number of near-duplicate silver plans, which would continue unless limits on the number of these plans are set. We also explained that near-duplicate plans are the most difficult to filter and sort out by interface improvements, and would therefore be most effectively addressed by limiting the number of non-standardized plan options.

As such, we explained that we believe having an excessive number of plans (particularly those at the silver metal level) places an inequitable burden on those who need insurance the most, those who face the greatest challenges in selecting the most suitable health plan, and those who can least withstand the consequences of choosing a plan that costs too much and delivers too little. For this reason, we explained that we believe reducing the number of available plans (particularly silver plans) by limiting the number of non-standardized plan options that issuers can offer, can play an important role in advancing the agency's commitments to health equity.

In short, we explained that we believe limiting the number of non-standardized plan options that issuers can offer in conjunction with enhancing the plan comparison experience on *HealthCare.gov* would be the most effective method to streamline the plan selection process and to reduce the risk of plan choice overload for consumers on the *HealthCare.gov* Exchanges.

In addition, we proposed, as an alternative to the proposal to limit the number of non-standardized plan options that an FFE or SBE–FP issuer may offer on the Exchange, to impose a new meaningful difference standard for PY 2024 and subsequent PYs, which would be more stringent than the previous standard finalized in the 2015 and 2017 Payment Notices. Specifically, instead of including all of the criteria from the original standard from the 2015 Payment Notice (that is, cost sharing, provider networks, covered benefits, plan type, Health Savings Account eligibility, or self-only, non-self-only, or child only plan offerings), we proposed grouping plans by issuer ID, county, metal level, product network type, and deductible integration type, and then evaluating whether plans within each group are ''meaningfully different'' based on differences in deductible amounts.

We explained that with this proposed approach, two plans would need to have deductibles that differ by more than $1,000 to satisfy the new proposed meaningful difference standard. We further explained that we believe adopting this approach for a new meaningful difference standard would more effectively reduce the risk of plan choice overload and streamline the plan selection process for consumers on the Exchanges.

With a dollar deductible difference threshold of $1,000, we estimated that the weighted average number of non-standardized plan options (which does not take into consideration standardized plan options) available to each consumer would be reduced from approximately 107.8 in PY 2022 to 53.2 in PY 2024, which we explained we believe would still provide consumers with a sufficient number of plan offerings. In addition, we estimated that of a total of 106,037 non-standardized plan option plan-county combinations offered in PY 2022, approximately 49,629 (46.8 percent) of these plan-county combinations would no longer be permitted to be offered, which we stated we believe would still provide consumers with a sufficient degree of choice during the plan selection process.[289] We estimated that if this dollar deductible difference threshold were adopted, of the approximately 10.21 million enrollees in the FFEs and SBE–FPs in PY 2022, approximately 2.64 million (25.9 percent) of these enrollees would have their current plan offerings affected.[290]

We sought comment on the feasibility and utility of limiting the number of non-standardized plan options that FFE and SBE–FP issuers can offer through the Exchanges beginning in PY 2024. We also sought comment on whether the limit of two non-standardized plan options per issuer, product network type, and metal level in any service area is the most appropriate approach, or if a stricter or more relaxed limit should be adopted instead. In addition, we sought comment on the advantages and disadvantages of utilizing a phased approach of limiting the number of non-standardized plan options (for example, if there were a limit of three non-standardized plan options per issuer, product network type, metal level, and service area for PY 2024, two for PY 2025, and one for PY 2026). We also sought comment on the effect that

[289] Plan-county combinations are the count of unique plan ID and FIPS code combinations. This measure was used because a single plan may be available in multiple counties, and specific limits on non-standardized plan options or specific dollar deductible difference thresholds may have different impacts on one county where there are four plans of the same product network type and metal level versus another county where there are only two plans of the same product network type and metal level, for example.

[290] These calculations assumed that the non-standardized plan options removed due to the proposed limit would be those with the fewest enrollees based on PY 2022 data, which includes individual market medical QHPs for Exchanges using the *HealthCare.gov* eligibility and enrollment platform, including SBE–FPs.

adopting such a limit would have on particular product network types, and whether this limit would cause a proliferation of product network types that are not actually differentiated for consumers.

Furthermore, we sought comment on whether we should consider additional factors, such as variations of products or networks, when limiting the number of non-standardized plan options—which would mean that issuers would be limited to offering two non-standardized plan options per product network type, metal level, product, and network variation (for example, by network ID) in any service area (or some combination thereof). We also sought comment on whether permitting additional variation only for specific benefits, such as adult dental and adult vision benefits, instead of permitting any variation in a product (for example, by product ID) would be more appropriate.

In addition, we sought comment on imposing a new meaningful difference standard in place of limiting the number of non-standardized plan options that issuers can offer. We also sought comment on additional or alternative specific criteria that would be appropriate to include in the meaningful difference standard to determine whether plans are ''meaningfully different'' from one another, including whether the same criteria and difference thresholds from the original standard from the 2015 Payment Notice or the updated difference thresholds from the 2017 Payment Notice should be instituted, or some combination thereof. Finally, we sought comment on the specific deductible dollar difference thresholds that would be appropriate to determine whether plans are considered to be ''meaningfully different'' from other plans in the same grouping, and whether a deductible threshold of $1,000 would be most appropriate and effective, or if a stricter or more relaxed threshold should be adopted instead.

After reviewing the public comments, we are finalizing § 156.202 with modification. Specifically, for PY 2024, we are limiting the number of non-standardized plan options that issuers of QHPs can offer through Exchanges on the Federal platform (including the SBE–FPs) to four non-standardized plan options per product network type, metal level (excluding catastrophic plans), and inclusion of dental and/or vision benefit coverage, in any service area. For PY 2025 and subsequent plan years, we are limiting the number of non-standardized plan options that issuers of QHPs can offer through Exchanges on the Federal platform (including the SBE–FPs) to two non-standardized plan options per product network type, metal level (excluding catastrophic plans), and inclusion of dental and/or vision benefit coverage, in any service area.

We note that for PY 2024 and subsequent PYs, we are permitting additional flexibility specifically for plans with additional dental and/or vision benefit coverage. Under this modified requirement for PY 2024, For example, an issuer will be permitted to offer four non-standardized gold HMOs with no additional dental or vision benefit coverage, four non-standardized gold HMOs with additional dental benefit coverage, four non-standardized gold HMOs with additional vision benefit coverage, and four non-standardized gold HMOs with additional dental and vision benefit coverage, as well as four non-standardized gold PPOs with no additional dental or vision benefit coverage, four non-standardized gold PPOs with additional dental benefit coverage, four non-standardized gold PPOs with additional vision benefit coverage, and four non-standardized gold PPOs with additional dental and vision benefit coverage, in the same service area.

Under this modified requirement, for PY 2025, for example, an issuer will be permitted to offer two non-standardized gold HMOs with no additional dental or vision benefit coverage, two non-standardized gold HMOs with additional dental benefit coverage, two non-standardized gold HMOs with additional vision benefit coverage, and two non-standardized gold HMOs with additional dental and vision benefit coverage, as well as two non-standardized gold PPOs with no additional dental or vision benefit coverage, two non-standardized gold PPOs with additional dental benefit coverage, two non-standardized gold PPOs with additional vision benefit coverage, and two non-standardized gold PPOs with additional dental and vision benefit coverage, in the same service area.

By finalizing the proposed policy with modifications to increase the limit on the number of non-standardized plan options that issuers can offer to four instead of two for PY 2024, and to factor the inclusion of dental and/or vision benefit coverage into this limit, we estimate (based on PY 2023 enrollment and plan offering data) that the weighted average number of non-standardized plan options available to each consumer will be reduced from approximately 89.5 in PY 2023 to 66.3 in PY 2024, while the weighted average total number of plans (which includes both standardized and non-standardized plan options) available to each consumer will be reduced from approximately 113.7 in PY 2023 to 90.5 in PY 2024.

Furthermore, we estimate that approximately 17,532 of the total 101,453 non-standardized plan option plan-county combinations (17.3 percent) will be discontinued as a result of this limit in PY 2024. Relatedly, we estimate that approximately 0.81 million of the 12.2 million enrollees on the FFEs and SBE–FPs (6.6 percent) will be affected by these discontinuations in PY 2024. Finally, in terms of the impact on network availability, for PY 2024, we estimate an average reduction of only 0.03 network IDs per issuer, product network type, metal level, and service area, meaning we anticipate network IDs to remain largely unaffected by this limit for PY 2024.

We note that, for PY 2025, we are unable to provide meaningful estimates at this time for the weighted average number of non-standardized plan options available to each consumer; the weighted average number of total plans available to each consumer; the number of plan-county discontinuations; the number of affected enrollees; and the average reduction of network IDs per issuer, product network type, metal level, and service area under the limit of two non-standardized plan options per issuer, product network type, metal level, inclusion of dental and/or vision benefit, and service area.

For these estimates to be meaningful, they will need to be based on plan offering and enrollment data for PY 2024, which will not be available until the end of the current QHP certification cycle for PY 2024 and the end of the 2024 OEP, respectively. We anticipate that the broader landscape of plan offerings as well as the composition of individual issuers' portfolios of plan offerings will undergo significant changes as a result of the limit of four non-standardized plan options in PY 2024, and that any estimates based on data sourced from a plan year before this limit is enacted would not be meaningfully predictive of the landscape of plan offerings or individual issuers' portfolios of plan offerings for a plan year after this limit is enacted.

Furthermore, these estimates would not be able to take into account the exceptions process we intend to propose that would allow issuers to offer non-standardized plan options in excess of the limit of two for PY 2025 and subsequent plan years, because we intend to propose the exceptions

process, as well as the specific criteria and thresholds to be included in this exceptions process, in the 2025 Payment Notice proposed rule, and we do not yet know whether or how such a proposal would be finalized.

We also offer further clarification regarding the specific dental and/or vision benefit coverage a non-standardized plan option would need to include in order to qualify for this additional flexibility, which is also reflected in the finalized regulation text at § 156.202(c). Specifically, we clarify that a non-standardized plan option must include any or all of the following adult dental benefit coverage in the ''Benefits'' column in the Plans and Benefits Template: (1) Routine Dental Services (Adult), (2) Basic Dental Care—Adult, or (3) Major Dental Care—Adult. We also clarify that a non-standardized plan option must include any or all of the following pediatric dental benefit coverage in the ''Benefits'' column in the Plans and Benefits Template: (1) Dental Check-Up for Children, (2) Basic Dental Care—Child, or (3) Major Dental Care—Child. Finally, we clarify that a non-standardized plan option must include the following adult vision benefit coverage in the ''Benefits'' column in the Plans and Benefits Template: Routine Eye Exam (Adult).

We are making these modifications primarily to decrease the risk of disruption for both issuers and enrollees, and to provide increased flexibility to issuers. Specifically, many commenters supported adopting a more gradual approach in which the number of non-standardized plan options that issuers can offer is gradually decreased over a span of several plan years, instead of directly adopting a limit of two for PY 2024. Additionally, regarding the modification to factor the inclusion of dental and/or vision benefits into this limit, Issuers have frequently offered these specific benefit categories as additional benefits in otherwise identical plan options, accounting for the vast majority of product ID-based variation (approximately 84 percent of such variation) offered by issuers within a given metal level, network type, and service area in PY 2022.

We are not finalizing a new meaningful difference standard. We summarize and respond to public comments received on the proposed non-standardized plan option limits and the alternative meaningful difference standard below.

Comment: Many commenters agreed that the number of plan choices available through the Exchanges has increased to a point that is beyond productive for consumers, and many commenters agreed that additional action should be taken to reduce the risk of plan choice overload. As such, many of these commenters supported directly limiting the number of non-standardized plan options that issuers can offer. These commenters explained that adopting this specific approach to reduce the risk of plan choice overload would be most effective in further simplifying and streamlining the Exchange experience, aligning with some of the primary goals of the Exchanges—fostering competition among issuers and facilitating a consumer-friendly experience for individuals looking to purchase health insurance.

As commenters further explained, limiting the number of non-standardized plan options is especially important at this time because many consumers currently face an overwhelming number of health plans to choose from on the Exchanges, and these consumers must navigate the complexity of each of these options to be able to select a health plan that meets their unique health care needs and budgetary realities.

Commenters explained that having an overwhelming number of options makes it difficult to easily and meaningfully compare all available options, which increases the risk of plan choice overload and suboptimal plan selection as well as the risk of unexpected financial harm, especially for consumers with a lower degree of health care literacy. Commenters thus explained that limiting the number of non-standardized plan options would allow consumers to more easily and meaningfully compare available plan options and select a plan that best meets their unique health care needs, which would particularly benefit those with lower degrees of health care literacy and those most at risk of unexpected financial harm.

Several commenters also pointed to the fact that several SBEs have successfully limited the number of non-standardized plan options that issuers can offer as evidence that adopting such a policy would benefit consumers in States with an FFE or SBE–FP. Several commenters also explained that codifying this requirement would serve as a helpful template for consideration by SBEs that do not currently limit the number of non-standardized plan options but may be interested in doing so in the future.

Response: We agree that the risk of plan choice overload has continued to increase over the last several years and that additional action should be taken to reduce this risk. We also agree that limiting the number of non-standardized plan options that issuers can offer is the most effective strategy to mitigate this risk, especially when done in conjunction with requiring issuers to offer standardized plan options and enhancing choice architecture on *HealthCare.gov.*

Specifically, we agree that these limits will allow consumers to more meaningfully compare available plan options and select a health plan that best meets their unique health needs. These limits will also allow consumers to take more factors into consideration when comparing and selecting a health plan—such as providers, networks, formularies, and quality ratings. We also agree that these changes would reduce the risk of suboptimal plan selection, which would greatly benefit disadvantaged populations who can least afford experiencing unexpected financial harm.

Comment: Several commenters opposed limiting the number of non-standardized plan options that issuers can offer. Several of these commenters explained that limiting the number of these plans would impose a significant burden on issuers as they develop product portfolios for PY 2024. These commenters explained that issuers have already made strategic decisions about plan offerings and participation, and that finalizing these changes for PY 2024 would result in significant operational challenges. These commenters also expressed concern that we are proposing the concurrent implementation of multiple substantive provisions—such as changes to the re-enrollment hierarchy and changes to standardized plan option formulary tiering—that would be extremely disruptive if finalized simultaneously.

Many commenters also explained that a significant number of Exchange enrollees would lose access to the plans they are currently enrolled in and would consequently be relegated to enrollment in plans they did not choose. Many of these commenters pointed to the estimate that this provision would force 2.72 million enrollees on the FFE and SBE–FPs (26.6 percent of total enrollees) to change plans due to plan discontinuations in PY 2024. Many of these commenters explained that these plan discontinuations would put consumers at risk of unexpected financial harm, such as from changing the cost-sharing structure, formularies, or networks from the plans they are currently enrolled in.

Many commenters also explained that these plan discontinuations would come at a time when issuers will be preparing

for and processing a deluge of Medicaid redeterminations with the unwinding of the Public Health Emergency. Commenters explained that approximately 10 million current Medicaid enrollees will be eligible for other forms of coverage, including approximately one million of these enrollees who are expected to be eligible for Exchange coverage. Commenters explained that for this reason, the Exchanges need to be prepared for a massive influx of enrollees over the coming months, and that major policy changes could cause severe disruption for both consumers and issuers at a critical time.

Commenters also explained that limiting the number of non-standardized plan options that issuers can offer would inhibit issuer innovation and force issuers to drastically reduce the unique plan designs they have thoughtfully developed to best serve their members' health care needs, which would in turn force consumers into a ''one-size fits all'' benefit offering.

Many commenters also explained how limiting the number of non-standardized plan options that issuers can offer would have unintended impacts on provider networks. These commenters explained that many issuers would likely drop plans with broader networks to maintain competitive plan premiums, which would ultimately move the market in the direction of plans with restricted provider networks. Commenters further explained that this change could result in further disruption and the loss of providers consumers are accustomed to. Commenters also explained that there are consumers who are well-served by smaller, less expensive networks, and there are consumers who are willing to pay more for a larger of pool of providers and facilities—and that both groups deserve the same access to plan choice.

Several commenters also explained that the proposed limit would negatively impact HSA-eligible high-deductible health plan (HDHP) offerings since issuers would likely discontinue these plan offerings due to low enrollment if non-standardized plan options were limited. Thus, several commenters recommended that HSA-eligible HDHPs be exempt from these limits.

Several commenters pointed to other health coverage options, such as Medicare Advantage, which do not limit the number of plans an issuer can offer. These commenters explained that, in 2022, Medicare beneficiaries had a choice of 23 stand-alone Medicare Part D plans and 31 Medicare Advantage plans offering Part D, on average. Similarly, these commenters explained that in 2023, Medicare beneficiaries had a choice of 43 Medicare Advantage plans, on average.

Several commenters also explained that although the proposed limits may be appropriate for geographic areas with high rates of both issuer participation and plan choice proliferation, these limits would not be appropriate for geographic areas with lower rates of issuers participation and a more restricted range of plan offerings. These commenters explained that several States have service areas with only one issuer and a limited number of plan offerings, and that these limits would severely restrict consumer choice in these counties.

Several commenters also explained that limiting the number of non-standardized plan options that issuers can offer could discourage new market entrants and disadvantage smaller issuers since larger holding companies operating multiple issuers would still be able to have each issuer offer its own non-standardized plan options.

Response: We disagree that issuers will have insufficient time to operationalize these changes, as we have regularly issued new requirements for the following plan year in that plan year's Payment Notice, as we are doing here. Additionally, although we acknowledge that the termination of numerous non-standardized plan options would entail burden for issuers (such as by affecting issuers' balance of enrollment across plans, by affecting the premium rating for each of those plans, and by requiring issuers to send discontinuation notices for enrollees whose plans are being discontinued), we believe that the advantages of enacting these changes outweigh the disadvantages of doing so.

Specifically, with plan proliferation continuing unabated for several years, consumers have had to select from among record numbers of available plan options. Having such high numbers of plan choices to select from makes it increasingly difficult for consumers, especially those with lower rates of health care literacy, to easily and meaningfully compare all available plan options. This subsequently increases the risk of suboptimal plan selection and unexpected financial harm for those who can least afford it. Thus, although we acknowledge the burden imposed on issuers subsequent to the imposition of these limits in PY 2024, we believe these changes align with the original intent of the Exchanges—to facilitate a consumer-friendly experience for individuals looking to purchase health insurance. We believe this change will continue to benefit consumers on the Exchanges over numerous years. We further note that we intend to offer the necessary guidance and technical assistance to facilitate this transition, such as through the 2024 Letter to Issuers and QHP certification webinars.

Furthermore, based on PY 2022 QHP submission and enrollment data, we have determined that each issuer's enrollment is predominately concentrated among its top several plan offerings per product network type and metal level, with the smaller remaining portion of enrollment distributed more evenly among several plans. Specifically, we determined that, on average, 71 percent of each issuer's enrollment is concentrated among its top two plan offerings per product network type and metal level, and 83 percent of each issuer's enrollment is concentrated among its top three plan offerings per product network type and metal level—meaning that the remaining portion of each issuer's enrollment is more evenly distributed among issuer's less popular offerings. As such, we believe making these changes will simply concentrate enrollment among each issuer's top current plan offerings.

We also acknowledge that, as a result of limiting the number of non-standardized plan options, a significant number of consumers will have the plans they are currently enrolled in discontinued and will as a result be auto-reenrolled into another non-standardized plan option or standardized plan option offered by the issuer—similar to how this scenario would be handled prior to the imposition of these new requirements under the existing reenrollment hierarchy. We believe affected enrollees auto-reenrolled into standardized plan options would benefit from the several important distinctive features, such as enhanced pre-deductible coverage and copayments instead of coinsurance rates for a broad range of benefit categories, that serve as important forms of consumer protection. Furthermore, these standardized plan options were designed to incorporate design features that reflect the most popular current QHP offerings that millions of enrollees are already accustomed to. As such, we believe affected enrollees auto-reenrolled into standardized plan options will not experience disruption since these standardized plan options will not differ substantially from the discontinued plans that the majority of consumers are currently enrolled in.

Additionally, many commenters explained that a large number of current non-standardized plan option offerings differ in only minor ways from one another, and that consumers are often unaware of these minor differences. Thus, in the scenario that affected enrollees are auto-reenrolled into a non-standardized plan option (instead of a standardized plan option), we believe that the new plans these affected enrollees will be auto-reenrolled into will not differ significantly from the plan they are currently enrolled in. Thus, in short, we believe that the majority of affected enrollees would not experience significant disruption if they were crosswalked into either equivalent standardized plan option offerings or other non-standardized plan offerings. We also note that enrollees dissatisfied with the plan they are re-enrolled in will have the option to actively select a different plan offering for PY 2024, if desired.

We also note that phasing in the reduction in the number of non-standardized plan options that issuers can offer, beginning with four for PY 2024, will also significantly reduce the number of plan discontinuations and affected enrollees for PY 2024. Specifically, based on PY 2022 data, we originally estimated that a limit of two non-standardized plan options would result in approximately 60,949 of a total 106,037 non-standardized plan option plan-county combinations (57.5 percent) being discontinued, and approximately 2.72 million of the 10.21 million enrollees in the FFEs and SBE–FPs (26.6 percent) being affected. That said, under the limit of four non-standardized plan options that we are finalizing in this rule for PY 2024, based on PY 2023 data, we estimate that approximately 17,532 of the total 101,453 non-standardized plan option plan-county combinations (17.3 percent) will be discontinued as a result of this limit, and approximately 0.81 million of the 12.2 million enrollees on the FFEs and SBE–FPs (6.6 percent) will be affected by these discontinuations in PY 2024.

We anticipate that reducing the limit on non-standardized plan options from four in PY 2024 to two in PY 2025 and subsequent plan years will result in additional plan-county discontinuations and affected enrollees in PY 2025. That said, as described previously, we are unable to provide meaningful estimates for these plan-county discontinuations and affected enrollees for PY 2025 at this time due to PY 2024 plan offering and enrollment data limitations. In addition, as discussed previously, these estimates would not be able to take into account the exceptions process we intend to propose that would allow issuers to offer non-standardized plan options in excess of the limit of two for PY 2025 and subsequent plan years, because we intend to propose the exceptions process, as well as the specific criteria and thresholds to be included in this exceptions process, in the 2025 Payment Notice proposed rule, and we do not yet know whether or how such a proposal would be finalized.

We also clarify that the same rules and processes regarding binder payments for scenarios unrelated to non-standardized plan option limits (for example, scenarios from previous years where a particular plan offering is discontinued, and affected enrollees are auto-reenrolled from the discontinued plan into a different plan offered by the same issuer) apply to non-standardized plan option limit scenarios. Specifically, we clarify that for such renewals of effectuated coverage, a binder payment is not required, as the renewal is a continuation of effectuated coverage, and no new effectuation is required. The Exchanges on the Federal platform also do not require a binder payment for passive re-enrollments that continue effectuated coverage in another plan within the same product (or to a different plan in a different product offered by the same issuer, if the current product will no longer be available to the enrollee, consistent with the hierarchy for reenrollment specified at § 155.335(j)(2)) for the same subscriber.

This means, when consumers are auto-reenrolled into another non-standardized plan option or standardized plan option as a result of limiting the number of non-standardized plan options, no binder payment is required when subscribers in already effectuated policies are auto-reenrolled into coverage offered by the same issuer. If, however, the enrollee were to be moved into a plan from a different issuer, a binder payment would be required. Alternate enrollments, for QHP enrollees whose current year coverage is no longer available through the Exchange and for whom a plan offered by a different issuer is selected, are new enrollments, not renewals, and thus require a binder payment to effectuate.

We also acknowledge that a significant number of consumers will be affected by Medicaid eligibility redeterminations and will likely seek Exchange coverage as a result in PY 2024. We believe this timing offers a unique opportunity to help ensure that these consumers are able to meaningfully compare available plan options, select a health plan that best meets their health needs, and weigh standardized plan design features such as enhanced pre-deductible coverage for a greater number of benefits, enhanced price predictability in the form of copayments over coinsurance for a range of benefit categories, and copayments for all tiers of prescription drug coverage—including the non-preferred brand and specialty tiers, which are several relatively uncommon plan design features.

We disagree that these limits will inhibit issuer innovation and unnecessarily constrain consumer choice. In PY 2024, issuers will still retain the ability to offer at least five plans per product network type, metal level, and service area—four non-standardized plan options and at least one standardized plan option—such that issuers will continue to retain the ability to innovate in plan designs. This figure does not include the additional flexibility permitted for plans that include dental and/or vision benefit coverage, nor does it include catastrophic plans, which will allow issuers to offer additional plans beyond the five per product network type, metal level, and service area.

Under our incremental approach to phasing in limits to non-standardized plan options, in PY 2025 and subsequent plan years, issuers will retain the ability to offer at least three plans per product network type, metal level, and service area—two non-standardized plan options and at least one standardized plan option—such that issuers will continue to retain the ability to innovate in plan designs. Similar to PY 2024, this figure does not include the additional flexibility permitted for plans that include dental and/or vision benefit coverage, nor does it include catastrophic plans, which would allow issuers to offer additional plans beyond the three per product network type, metal level, and service area. As noted, we also intend to propose an exceptions process in the 2025 Payment Notice proposed rule that could, if finalized, further expand this range of possible plan offerings in PY 2025 and subsequent plan years.

Moreover, we reiterate that issuers are not limited in the number of standardized plan options that they can offer and thus retain the ability to innovate in their standardized plan options, so long as this innovation conforms with the required cost-sharing specifications. As previously discussed, we also believe that limiting the number of non-standardized plan options reduces the risk of plan choice overload, which actually enhances the plan selection process by making it easier to

more meaningfully compare available options.

Furthermore, we believe that, even with the limit on the number of non-standardized plan options an issuer may offer, the expected weighted average number of plan offerings available to each enrollee will remain sufficiently high to permit a satisfactory degree of choice. The limit being finalized in this rule is estimated to reduce the weighted average number of total plan offerings (which includes both standardized and non-standardized plan options offerings) from approximately 113.7 in PY 2023 to 90.5 in PY 2024, meaning consumers will continue to have more than enough plan choices to select from among. Even under the originally proposed limit of two non-standardized plan options per issuer, product network, type, metal level, inclusion of dental and/or vision benefits, and service area (which will be the limit for PY 2025 and subsequent plan years), we estimate that the weighted average number of total plan offerings available to each consumer will be 65.3—which will still permit a sufficient degree of consumer choice.

Similarly, we believe this flexibility will ensure that enrollees continue to have access to a sufficiently wide range of networks, ranging from broader and more encompassing networks with larger pools of providers and facilities to narrower and less expansive networks with smaller pools of providers and facilities. Additionally, as previously described, for PY 2024, we estimate an average reduction of only 0.03 network IDs per issuer, product network type, metal level, and service area combination, meaning we anticipate network IDs to remain largely unaffected by this limit for PY 2024. Furthermore, we once more reiterate that issuers are not limited in the number of standardized plan options that they can offer and thus retain the ability to continue to offer these network variations in their standardized plan options, if so desired.

While we acknowledge that this limit may affect HSA-eligible HDHP offerings, we do not believe that an exception to the limit is warranted for these plan offerings as there has been a steady decrease in both the proportion of HSA-eligible HDHP offerings and enrollment in these plan offerings (especially at the silver, gold, and platinum metal levels) over the past several years. The proportion of total plan offerings that are HSA-eligible HDHPs has decreased from 7 percent in PY 2019 to 3 percent in PY 2023. Most of these remaining plans are offered at the bronze metal level, with HSA-eligible HDHP offerings constituting 14 percent of plan offerings at the bronze metal level in PY 2023 (and 2 percent, 1 percent, and 0 percent at the non-CSR silver, gold, and platinum metal levels in the same year, respectively).

Total enrollment in these plans has decreased from 8 percent in PY 2019 to 5 percent in PY 2022. Similar to the PY 2023 plan offering data, most of this enrollment is concentrated at the bronze metal level, with HSA-eligible HDHPs constituting 14% of enrollment at the bronze metal level in PY 2022 (and 2 percent, 2 percent, and 0 percent at the non-CSR silver, gold, and platinum metal levels in the same year, respectively). We believe the fact that there is a steadily decreasing number of issuers choosing to offer these plans, as well as a steadily decreasing number of consumers choosing to enroll in these plans, reflects both issuer and consumer preference evolving away from these types of plan offerings.

Furthermore, due to severe AV constraints at the bronze metal level, issuers are significantly constrained in how they are able to design their plan offerings at this metal level. This is especially true for the non-expanded bronze metal level, in which it is not possible to include any pre-deductible coverage while maintaining an AV inside the permissible AV *de minimis* range—which is also the main reason we excluded a standardized plan design for the non-expanded bronze metal level in each set of the plan designs for PY 2024 finalized in this rule. This means that issuers of plans at the bronze metal level do not have as much leeway to vary their plan offerings compared to offering plans at other metal levels that do not have as severe AV constraints—such as the silver, gold, and platinum metal levels.

With issuers subject to these severe AV constraints at the bronze metal level in particular, and with the ability of issuers to vary plan designs at the bronze metal level significantly limited, we believe the four-plan limit in PY 2024 and the two-plan limit in PY 2025 and subsequent plan years (per product network type, metal level, inclusion of dental and/or vision benefit, and service area) will satisfactorily accommodate the full scope of plans that issuers wish to offer, including HSA-eligible HDHPs (at the bronze metal level, where the majority of these plans are offered). We encourage issuers to offer an HSA-eligible HDHP at the bronze metal level as one of their plan designs, if so desired.

We also acknowledge that issuers that offer Medicare Advantage plans are not limited in the number of plans they can offer. That said, the average number of plans that Medicare beneficiaries had access to in PY 2023 is still lower than the estimated weighted average number of total plan offerings that Exchange consumers would have to choose from with the limit we are finalizing on non-standardized plan options for both PY 2024 and PY 2025 and subsequent plan years.

In addition, we acknowledge that different States and counties have differing rates of issuer participation, and thus, differing rates of plan choice proliferation. Thus, we acknowledge that the risk of plan choice overload is more pronounced in certain counties than others. That said, we believe the limit of four non-standardized plan options for PY 2024 and the limit of two non-standardized plan options for PY 2025 and subsequent years (with additional flexibility permitted for plans with additional dental and vision benefits, and subject to a potential exceptions process for the limit of two non-standardized plan options beginning in PY 2025—which we intend to propose in the 2025 Payment Notice proposed rule) strikes an appropriate balance in reducing the risk of plan choice overload and preserving a sufficient degree of consumer choice, even for consumers in counties with lower rates of issuer participation.

For example, even in counties that have only two issuers, with each issuer seeking to offer the maximum number of plans possible under the limit we are finalizing, consumers in PY 2024 would still theoretically have the ability to select from at least five plans per issuer, product network type, and metal level—four of which would be non-standardized, and at least one of which would be standardized. In this scenario, if both of these issuers offered both PPO and HMO versions of these plans, they could each theoretically offer at a minimum, ten expanded bronze plans, ten silver plans (not including CSR silver plans), ten gold plans, and ten platinum plans, if desired, meaning the total number of plan offerings available to consumers in that county will be 20 per metal level, and 80 altogether. In this scenario, the number of plans could conceivably be higher if both issuers offered more than one standardized plan option per product network type and metal level, higher yet if issuers offer additional plan variations of non-standardized plan options with dental and/or vision benefit coverage, and higher yet if issuers choose to also offer catastrophic plans.

Similarly, under a non-standardized plan option limit of two, consumers in PY 2025 will still theoretically have the

ability to select from at least three plans per issuer, product network type, and metal level—two of which will be non-standardized, and at least one of which will be standardized. In this scenario, if both of these issuers offered both PPO and HMO versions of these plans, they could each theoretically offer at a minimum, six expanded bronze plans, six silver plans (not including CSR silver plans), six gold plans, and six platinum plans, if desired, meaning the total number of plan offerings available to consumers in that county would be 12 per metal level, and 48 altogether. Similar to PY 2024, In this scenario, the number of plans could conceivably be higher if both issuers offered more than one standardized plan option per product network type and metal level, higher yet if issuers offer additional plan variations of non-standardized plan options with dental or vision benefit coverage, and higher yet if issuers choose to also offer catastrophic plans.

We also acknowledge that there could potentially be scenarios in which counties have a single issuer not seeking to offer the maximum number of plans possible under this limit and instead chooses to offer no non-standardized plan options (since these plans are not required to be offered). In this scenario, an issuer could theoretically choose to only offer plans of one product network type at only the required metal levels (silver and gold), which would mean that there would only be two plan offerings in that particular county (for example, standardized silver HMO and standardized gold HMO). This will be true for both PY 2024 (when the limit is four non-standardized plan options) and for PY 2025 (when the limit is two non-standardized plan options), since the issuer in this scenario would be offering the bare minimum number of plans, and will therefore not be affected by the maximum limit on the number of non-standardized plan options, whether four or two.

Though we discourage such an approach, we believe this scenario would not differ substantially from the scenario before standardized plan option requirements were introduced. For example, if that same issuer, prior to the imposition of the standardized plan option requirements, chose to offer the minimum number of plans in a particular service area (specifically, one non-standardized silver HMO and one non-standardized gold HMO), then in PY 2023 also began to offer one standardized silver HMO and one standardized gold HMO, then in PY 2024 discontinued the non-standardized silver and gold HMOs, then consumers would have access to the same number of plans they did in PY 2022, before either standardized plan option requirements and non-standardized plan option limits were enacted. Similar to the previous discussion, this would also be true whether the limit on the number of non-standardized plan options is four in PY 2024 or two in PY 2025.

Furthermore, we disagree that limiting the number of non-standardized plan options that issuers can offer will discourage new market entrants and disadvantage smaller issuers since larger holding companies operating multiple issuers would still be able to have each issuer offer its own non-standardized plan options. To the contrary, we believe that limiting non-standardized plan options—in conjunction with requiring issuers to offer standardized plan options—can serve to even the playing field between larger and more well-established issuers and smaller issuers newer to the market, because all issuers will be required to offer plans with standardized cost sharing for a key set of EHB, and issuers will no longer be permitted to flood the market with plans with only minor differences between them.

Comment: Several commenters supported a limit of either two or four non-standardized plan options per product network type, metal level, and service area, while others recommended adopting a slightly looser or stricter limit, including for only particular metal levels. Several commenters recommended not permitting additional variation only for specific benefits such as adult dental and adult vision benefits because doing so would likely cause confusion for consumers as to their options to obtain such benefits through medical QHPs or stand-alone dental or vision plans. Several other commenters recommended taking additional factors into account for any limit, such as particular networks (instead of product network types) and particular benefit packages (in the form of product IDs)—such that issuers would be permitted to offer two non-standardized plan options per product ID, network ID, metal level, and service area, for example.

Response: We believe that finalizing a limit for PY 2024 of four non-standardized plan options and a limit for PY 2025 and subsequent plan years of two non-standardized plan options per product network type, metal level, inclusion of dental and/or vision benefit coverage, and service area strikes an appropriate balance between simplifying the plan selection process and maintaining a sufficient degree of consumer choice. We believe that adopting this more gradual approach, as opposed to directly limiting the number of non-standardized plan options to two in PY 2024, also facilitates this transition and reduces the risk of disruption for both issuers and enrollees.

We also believe that providing advance notice of the eventual transition to the limit of two non-standardized plan options in PY 2025 and subsequent plan years will allow issuers additional time to prepare for the two-plan limit. We further believe that permitting additional variations specifically for non-standardized plan options with the inclusion of dental and/or vision benefit coverage—instead of, for example, permitting additional variation for any single change in the product package, however small—decreases the likelihood that these limits will be circumvented. Permitting additional flexibility for any single change in the product package (such as only including one additional infrequently utilized benefit) would allow issuers to continue to offer as many non-standardized plan options as desired simply by adding a single benefit to these additional plans, which would run counter to the goal of reducing the risk of plan choice overload.

We also believe that permitting issuers to offer a total of at least five plans in PY 2024—four non-standardized and at least one standardized—per product network type, metal level, and inclusion of dental and/or vision benefit coverage, in any service area will allow issuers to offer at least five different networks per product network type, metal level, and inclusion of dental and/or vision benefit coverage, in any service area, a number we believe provides a sufficient degree of flexibility for issuers and choice for consumers.

Similarly, we believe that permitting issuers to offer a total of at least three plans in PY 2025 and subsequent plan years—two non-standardized and at least one standardized—per product network type, metal level, and inclusion of dental and/or vision benefit coverage, in any service area will allow issuers to offer at least three different networks per product network type, metal level, and inclusion of dental and/or vision benefit coverage, in any service area, a number we believe provides a sufficient degree of flexibility for issuers and choice for consumers.

Comment: Several commenters recommended either applying limits to non-standardized plan options or imposing a meaningful difference standard to issuers in SBEs in addition

to issuers in the FFEs and SBE–FPs. However, one commenter opposed applying limits to the number of non-standardized plan options and imposing a meaningful difference standard to issuers in SBE–FPs, explaining that SBE–FPs are similarly positioned to SBEs and should thus also be exempt from these requirements.

Response: Similar to our approach with respect to standardized plan options in the 2023 Payment Notice, we did not propose to limit the number of non-standardized plan options that issuers can offer through SBEs for several reasons, including that several SBEs already impose such limits. As such, we believe imposing duplicative requirements on issuers in SBEs that are already limited in the number of non-standardized plan options they can offer could create contradictory requirements that misalign with existing State requirements.

We also believe that SBEs are uniquely positioned to best understand the nature of their respective markets as well as the consumers in these markets. Furthermore, as we explained in the proposed rule, as well as in the 2023 Payment Notice, we believe States that have invested the necessary time and resources to become SBEs have done so in order to implement innovative policies that differ from those on the FFEs. We explained that we do not wish to impede these innovative policies so long as they comply with existing legal requirements.

However, as we explained in the proposed rule, as well as in the 2023 Payment Notice, because we impose this requirement in the FFEs, and because the SBE–FPs use the same platform as the FFEs, we believe it is appropriate to apply these requirements equally on FFEs and SBE–FPs. We believe that changing the platform to permit distinction on this policy between FFEs and SBE–FPs would require a very substantial financial and operational burden to HHS that we believe outweighs the benefit of permitting such a distinction. Finally, States with SBE–FPs that do not wish to be subject to these requirements may investigate the feasibility of transitioning to an SBE.

Comment: Many commenters who were concerned with the proliferation of seemingly similar plans and the consequent increased risk of plan choice overload but were opposed to limits on non-standardized plan options recommended implementing a meaningful difference standard. These commenters explained that implementing a meaningful difference standard would strike a more appropriate balance in reducing the risk of plan choice overload while simultaneously preserving a sufficient degree of consumer choice. These commenters also explained that adopting this approach would be a more effective mechanism in ensuring that plans are not duplicative and are instead meaningfully different from one another without inhibiting issuer innovation in plan design.

Commenters also had a range of recommendations for a meaningful difference standard. Several commenters suggested decreasing the deductible dollar difference threshold from the proposed $1,000 to $500, explaining that requiring a deductible difference of $1,000 would be too high to account for consumer preference. Several commenters recommended adopting a version of the meaningful difference standard more closely aligned with the previous iteration of the meaningful difference standard. Several commenters recommended taking more factors into account when determining whether plans are meaningfully different from one another, such as differences in covered specific benefits (such as dental or vision benefits), differences in product packages, differences in cost-sharing (such as the percentage of pre-deductible services), differences in provider network (such as if there is a reasonable difference in the size of the network or a reasonable percentage of providers who are different between networks), differences in network ID, differences in product network type, and HSA-compatibility.

Response: We believe that directly limiting the number of non-standardized plan options to four for PY 2024 and two for PY 2025 and subsequent years per issuer, product network type, metal level, and inclusion of dental and/or vision benefit coverage, in any service area, is a more effective mechanism at this particular time to reduce plan choice proliferation and to reduce the risk of plan choice overload for several reasons.

First, we believe the increased complexity associated with a meaningful difference standard that effectively reduces duplicative plan offerings as well as the risk of plan choice overload would be more difficult for issuers to understand and operationalize. We believe that direct limits on the number of non-standardized plan options that issuers can offer is a more straightforward approach. We also believe that the increased complexity associated with creating and operationalizing a meaningful difference standard (that takes multiple factors into account when determining whether plans are meaningfully different from one another) creates the risk of unintentionally allowing circumvention, which would decrease the efficacy of this mechanism.

Furthermore, we do not wish to cause unintended consequences to plan designs by requiring plans to have deductible differences of $1,000 or more—which would influence issuers to systematically increase cost-sharing for particular benefits to meet such meaningful difference standards or to systematically subject particular benefits to the deductible, which could potentially increase the risk of discriminatory benefit designs. That said, we note that we intend to further investigate the feasibility and appropriateness of employing this mechanism in a future year.

Comment: Several commenters requested clarification that any product or plan mapping necessary due to non-standardized plan option discontinuations would satisfy the exception to guaranteed renewability for uniform modifications of coverage at renewal due to modification in Federal requirements under §§ 147.106(e)(2) and 148.122(g)(2).

Response: The guaranteed renewability requirements at section 2703 of the PHS Act and § 147.106 (as well as parallel provisions at §§ 146.152 and 148.122) generally require an issuer that offers health insurance coverage in the individual or group market to renew or continue in force such coverage at the option of the plan sponsor or individual, as applicable. These provisions also establish requirements for issuers that decide to discontinue offering a particular product in the individual or group market and for issuers that modify coverage at the time of coverage renewal. These requirements apply at the ''product'' level, and the terms ''product'' and ''plan'' are defined in § 144.103.

Removing a plan(s) from a product will not result in a product discontinuation, unless by removing the plan(s), the issuer exceeds the scope of a uniform modification of coverage at § 147.106(e).[291] If an individual's product remains available for renewal, including a product with uniform modifications, the issuer generally must provide the individual the option to renew coverage under that product (including any plan within the product) to satisfy the guaranteed renewability

[291] Center for Consumer Information and Insurance Oversight, Uniform Modification and Plan/Product Withdrawal FAQ (June 15, 2015), available at *https://www.cms.gov/CCIIO/Resources/Fact-Sheets-and-FAQs/Downloads/uniform-mod-and-plan-wd-FAQ-06-15-2015.pdf.*

requirements. Further, issuers on the Exchange must adhere to the re-enrollment hierarchy at § 155.335(j) when auto re-enrolling enrollees in coverage through the Exchange.

The guaranteed renewability regulations provide that, in the individual and small group markets, modifications made pursuant to Federal or State requirements are a uniform modification of coverage. However, as nothing in this final rule requires an issuer to cease generally offering non-standardized plans (that is, outside the Exchange), a non-standardized plan discontinuation is not a change made pursuant to a Federal requirement.

Comment: Several commenters requested clarification that State-mandated plan designs would be excluded from the proposed limit on the number of non-standardized plan options.

Response: State-mandated plan designs will not be excluded from the limit of four non-standardized plan options in PY 2024 or two non-standardized plan options in PY 2025 and subsequent years per issuer, product network type, metal level, and inclusion of dental and/or vision benefit coverage, in any service area. We do not believe that State-mandated plan designs differ sufficiently from other non-standardized plan options and did not receive comments with substantive examples of such plan designs. Furthermore, we believe that if all issuers in a particular State are required to offer State-mandated plan designs through the Exchanges in that State, these limits will apply to these issuers equally. Finally, we believe that the flexibility permitted in this framework (in which issuers will have the ability to offer four non-standardized plan options per product network type, metal level, and inclusion of dental and/or vision benefit coverage, in any service area for PY 2024, and two for PY 2025) will allow issuers to comply with both these State-mandated plan designs and the limits finalized in this rule.

Comment: Several commenters requested that HHS clarify its definition of ''service area'' in the limit on the number of non-standardized plan options.

Response: We clarify that the ''service area'' component of the limit on non-standardized plan options refers to Federal Information Processing Series (FIPS) code.[292] A FIPS code is a five-digit code that is unique to every county in the country. The first two digits are the State code (for example, Georgia's State code is 13), and the remaining three digits identify the county. We are defining ''service area'' with FIPS codes in order to provide a standardized, widely utilized, comprehensive, and mutually exclusive geographic unit for assessing consumer choice overload and adherence to non-standardized plan option limits.

5. QHP Rate and Benefit Information (§ 156.210)

a. Age on Effective Date for SADPs

In the HHS Notice of Benefit and Payment Parameters for 2024 proposed rule (87 FR 78206, 78283), we proposed at new § 156.210(d)(1) to require issuers of stand-alone dental plans (SADPs), as a condition of Exchange certification, to use an enrollee's age at the time of policy issuance or renewal (referred to as age on effective date) as the sole method to calculate an enrollee's age for rating and eligibility purposes, beginning with Exchange certification for PY 2024. We proposed that this requirement apply to Exchange-certified SADPs, whether sold on- or off-Exchange. We clarify that an SADP, as noted at section 1302(d)(2)(B)(ii) of the ACA, is a type of QHP, which is Exchange-certified, and offers the pediatric dental EHB as specified at section 1302(b)(1)(J) of the ACA.

We explained in the proposed rule (87 FR 78283) that since PY 2014, the process the FFEs use in QHP certification allows SADP issuers seeking certification to enter multiple options to explain how age is determined for rating and eligibility purposes. We explained that because the Federal eligibility and enrollment platform operationalizes the rating and eligibility standards when an applicant seeks SADP coverage through an SBE–FP, issuers in SBE–FPs have also been required to comply with this part of the process. While market rules at § 147.102(a)(1)(iii) require medical QHP issuers to use the age as of the date of policy issuance or renewal for purposes of identifying the appropriate age rating adjustment, SADP issuers have been able to enter any of the following four options in the Business Rules Template: (1) Age on effective date; (2) Age on January 1st of the effective date year; (3) Age on insurance date (age on birthday nearest the effective date); or (4) Age on January 1st or July 1st.[293]

We stated in the proposed rule that despite the availability of these other options for SADPs, age on effective date is the most commonly used age rating methodology; the vast majority of individual market SADP issuers have used the age on effective date method since PY 2014. We added that not only is it the most commonly used method, but it is also the most straightforward methodology for consumers to understand. For example, under the age on effective date method, if an enrollee is age 30 at the time of a plan's effective date, the enrollee is rated at age 30 for the rest of the plan year, and the rate will not change on the basis of age until the next plan year, even if the enrollee's age changes mid-plan year.

As further explained in the proposed rule (87 FR 78283), allowing SADPs to rate by other methods imposes unnecessary complexity, not only to us as operator of the FFEs and the Federal eligibility and enrollment platform, but also to enrollment partners and consumers in the Exchanges on the Federal platform. Thus, we stated that we believe requiring SADP issuers to use the age on effective date methodology, and consequently removing the less commonly used and more complex age calculation methods, would reduce consumer confusion and promote operational efficiency.

We stated that, by helping to reduce consumer confusion and promote operational efficiency during the QHP certification process, this proposed policy would help facilitate more informed enrollment decisions and enrollment satisfaction. Accordingly, we stated that we believe it is appropriate to extend this proposed certification requirement to SADPs seeking certification on the FFEs as well as the SBE–FPs and SBEs. We sought comment on any anticipated challenges that this proposal could present for SBEs using their own platform, and whether and to what extent we should, if this proposal is finalized, limit or delay this proposed certification requirement for those SBEs. We received one comment on the anticipated challenges this proposal could present for SBEs, which we address later in this section.

We sought comment on the proposal to require SADP issuers, as a condition of Exchange certification, to use age on effective date as the sole method to calculate an enrollee's age for rating and eligibility purposes, beginning with Exchange certification for PY 2024. We refer readers to the proposed rule (87 FR 78283) for further discussion of our proposal. After reviewing the public comments, we are finalizing this provision at new § 156.210(d)(1) as proposed. We summarize and respond to public comments received on the

[292] *https://www.census.gov/library/reference/code-lists/ansi.html#county.*

[293] See, for example, Qualified Health Plan Issuer Application Instructions, Plan Year 2023, Extracted section: Section 3B: Business Rules. *https://www.qhpcertification.cms.gov/s/Business%20Rules.*

proposed age on effective date policy below.

Comment: All commenters who commented on this provision supported the proposal. A few commenters expressed their general support of CMS's efforts to standardize the age calculation method and to select age on effective date as the only method for calculating the enrollee's age for rating and eligibility purposes. A majority of commenters supported the proposal because it would reduce or eliminate confusion among consumers and improve consumer understanding of SADPs. One commenter agreed this policy would eliminate unnecessary complexity for both consumers and the Navigators and assisters who help them.

Response: We agree with commenters that requiring SADP issuers to use age on effective date as the sole method to calculate an enrollee's age for rating and eligibility purposes will help reduce or eliminate confusion among consumers, improve consumer understanding of SADPs, and eliminate unnecessary complexity for consumers and those who assist them. As we mentioned in the proposed rule (87 FR 78283), not only is age on effective date the most commonly used age rating method, but it is also the most straightforward methodology for consumers to understand. Since consumers can more easily understand the premium rate they are charged when the age on effective date method is used, it reduces consumer confusion. As we also mentioned, allowing SADPs to rate by other methods imposes unnecessary complexity, not only to HHS as operator of the FFEs and the Federal eligibility and enrollment platform, but also to enrollment partners and consumers in the Exchanges on the Federal platform. From the consumer standpoint, the more complicated alternative age calculation methods currently in use make it more difficult to understand the premium rate they are charged. Therefore, we believe requiring SADP issuers to use age on effective date as the sole age rating method, and removing the less commonly used and more complex age calculation methods, will reduce consumer confusion and promote operational efficiency.

Comment: Several commenters supported this proposal because it promotes consistency between issuers, as well as between medical QHPs and QHPs that are SADPs. One commenter agreed with CMS that standards for medical QHPs and QHPs that are SADPs should be aligned wherever possible, including rating methodologies. Similarly, one commenter supported the proposal because it aligns with consumer expectations and current industry practices. Another commenter noted that the other age reporting options are not widely used, and therefore, they agreed it is appropriate for CMS to no longer offer issuers the ability to choose the less common age reporting methods. Lastly, one commenter noted that SBEs that do not currently use the age on effective date method may need more time for implementation.

Response: We agree with commenters that requiring SADP issuers to use age on effective date as the sole age calculation method promotes consistency between issuers and between medical QHPs and QHPs that are SADPs as well. We also agree that this policy aligns with consumer expectations and industry practices. As we mentioned in the proposed rule (87 FR 78283), the vast majority of individual market SADP issuers have used the age on effective date method since PY 2014. Given that most SADP issuers are already using this method, and based on the current availability of such plans in all service areas, we anticipate that most consumers or other Exchange-certified plans will not experience notable changes. As we also mentioned, market rules at § 147.102(a)(1)(iii) require medical QHP issuers to use the age as of the date of policy issuance or renewal for purposes of identifying the appropriate age rating adjustment, however, SADP issuers were not subject to the same requirement. Implementing this policy change will help align the requirements for SADPs with the requirements applicable to other QHPs. We also acknowledge that the SADP issuers that do need to implement this change will need time for implementation, but we do not anticipate this will be a significant operational burden and believe this is feasible to implement for QHP certification in PY 2024.

b. Guaranteed Rates for SADPs

In the HHS Notice of Benefit and Payment Parameters for 2024 proposed rule (87 FR 78206, 78284), we proposed at new § 156.210(d)(2) to require issuers of SADPs, as a condition of Exchange certification, to submit guaranteed rates beginning with Exchange certification for PY 2024. We proposed that this requirement apply to Exchange-certified SADPs, whether they are sold on- or off-Exchange.

In the proposed rule (87 FR 78284), we explained that SADPs are excepted benefits, as defined by section 2791(c)(2)(A) of the PHS Act and HHS implementing regulations at §§ 146.145(b)(3)(iii)(A) and 148.220(b)(1), and are not subject to the PHS Act insurance market reform provisions that generally apply to non-grandfathered health plans in the individual and group markets inside and outside the Exchange.[294] In particular, because issuers of Exchange-certified SADPs are not required to comply with the premium rating requirements under section 2701 of the PHS Act applicable to non-grandfathered individual and small group health insurance coverage, we have permitted issuers of Exchange-certified SADPs in the FFEs and SBE–FPs to comply with the rate information submission requirements at § 156.210 under a modified standard.[295] Specifically, we have historically granted issuers of SADPs the flexibility to offer guaranteed or estimated rates. By indicating the rate is a guaranteed rate, the SADP issuer commits to charging the consumer the approved premium rate, which has been calculated using consumers' geographic location, age, and other permissible rating factors. Estimated rates require enrollees to contact the issuer to determine a final rate.

This flexibility for SADPs to offer estimated rates was effective for SADP issuers beginning with PY 2014. We explained in the proposed rule that it was necessary because the relevant certification template was originally designed to support medical QHPs, which forced operational limits that prevented the accurate collection of rating rules for SADPs. We noted that since PY 2014, we have improved the certification templates to allow SADPs to set the maximum age for dependents to 18, and to rate all such dependents. Thus, the FFEs and SBE–FPs can now accommodate the accurate collection of dental rating rules without forced operational limits in most reasonable circumstances.

In the proposed rule (87 FR 78284), we stated that we believe this proposal would significantly benefit enrollees. Consistent with §§ 156.440(b) and 156.470, APTC may be applied to the pediatric dental EHB portion of SADP premiums. We explained that if SADP issuers submit estimated rates and

[294] See PHS Act sections 2722(b) and (c) and 2763(b). Examples of PHS Act insurance market reforms added by the ACA that do not apply to stand-alone dental plans include but are not limited to section 2702 guaranteed availability standards, section 2703 guaranteed renewability standards, and section 2718 medical loss ratio standards.

[295] See, for example, the 2014 Final Letter to Issuers on Federally-facilitated and State Partnership Exchanges for more information on how SADPs in the FFEs and SBE–FPs have flexibility to comply with the rate information submission requirements at § 156.210.

subsequently modify their actual rates, the Exchanges, including State Exchanges (including State Exchanges on the Federal platform) and FFEs, could incorrectly calculate APTC for the pediatric dental EHB portion of a consumer's premium, which could potentially cause consumer harm. We also noted that since low-income individuals may qualify for APTC, we believe this proposed policy change would help advance health equity by helping ensure that low-income individuals who qualify for APTC are charged the correct premium amount when enrolling in SADPs on the Exchange.

We acknowledged in the proposed rule that requiring guaranteed rates presents a small risk that SADP issuers that offer estimated rates could cease offering SADPs on the Exchanges. While we recognized this risk, we stated that we believe the benefits of this proposal far exceed the disadvantages. Specifically, as discussed previously, we stated that we believe this proposed policy change would significantly reduce the risk of consumer harm by reducing the risk of incorrect APTC calculation for the pediatric dental EHB portion of premiums.

As we explained in the proposed rule, because we believe this proposed policy would significantly benefit enrollees by ensuring that enrollees in SADPs receive the correct APTC calculation for the pediatric dental EHB portion of premiums, and therefore, are charged the correct premium rate, we believe it is appropriate to apply this proposed certification requirement to SADPs seeking certification on the FFEs, as well as the SBE–FPs and SBEs. We sought comment on any anticipated challenges that this proposal could present for SBEs using their own platform, and whether and to what extent we should, if this proposal is finalized, limit or delay this proposed certification requirement for those SBEs. We did not receive any comments on the anticipated challenges this proposal could present for SBEs, or whether or to what extent we should limit or delay this proposed certification requirement.

We sought comment on the proposal to require issuers of Exchange-certified SADPs, whether they are sold on- or off-Exchange, to submit guaranteed rates as a condition of Exchange certification, beginning with Exchange certification for PY 2024. We refer readers to the proposed rule (87 FR 78284) for further discussion of our proposal. After reviewing the public comments, we are finalizing this provision at new § 156.210(d)(2) as proposed. We summarize and respond to public comments received on the proposed policy to require guaranteed rates below.

Comment: All commenters addressing this provision supported the policy proposal. A few commenters expressed their general support of CMS's efforts to require the submission of guaranteed rates for SADPs. More specifically, a few commenters supported this proposal because it promotes consumer understanding and helps reduce or eliminate consumer confusion. One commenter stated that requiring SADPs to submit guaranteed rates promotes consumer understanding by ensuring that consumers and those who assist them will better understand their coverage and the actual premium costs they will incur. Another commenter noted that this proposal will help people make informed decisions when shopping for their health coverage. Another commenter explained that guaranteed rates add transparency and clarity for consumers.

Response: We agree with the commenters that requiring SADP issuers to submit guaranteed rates will benefit consumers by promoting consumer understanding and helping to reduce or eliminate consumer confusion. We prioritize the development and implementation of consumer-centric policies, and will continue to direct our efforts towards promoting consumer understanding and improving consumer transparency.

Comment: A few commenters supported this proposal because it results in a better consumer experience and helps eliminate complexity. One commenter noted requiring SADP issuers to submit guaranteed rates will eliminate the practice of providing estimated rates to consumers, which typically requires the enrollee to contact the insurance issuer directly to determine a final rate.

Response: We agree with the commenters that requiring guaranteed rates will result in an improved consumer experience. We also agree that eliminating the practice of providing estimated rates, which requires the enrollee to contact the insurance issuer directly to determine a final rate, is beneficial because it helps eliminate complexity and reduces the burden on the consumer. As we noted in the proposed rule (87 FR 78284), by indicating a guaranteed rate, the SADP issuer commits to charging the consumer the approved premium rate, which has been calculated using the consumers' geographic location, age, and other permissible rating factors. Therefore, a guaranteed rate provides consumers with more certainty, resulting in a more positive consumer experience.

Comment: A few commenters supported the guaranteed rates proposal because it is consistent with current industry practices. In particular, one commenter stated that since the estimated rate option is not widely used by SADP issuers, it is appropriate for CMS to no longer offer this option.

Response: We agree with the commenters that the guaranteed rates proposal aligns with current industry practices. As we mentioned in the proposed rule (87 FR 78284), the vast majority of issuers offering on-Exchange and off-Exchange Exchange-certified SADPs already elect to submit guaranteed rates. Therefore, the majority of SADP issuers are unlikely to be impacted by this policy.

Comment: A few commenters supported the guaranteed rates proposal because it allows for accurate APTC calculation of the pediatric dental EHB portion of premiums, and protects consumers from both unexpected costs and unnecessary financial burden. One commenter explained that because the portion of APTC attributable to pediatric dental coverage can be applied to SADPs, after-purchase rate information changes could affect APTC calculation, resulting in unnecessary financial burden and uncertainty for enrollees selecting SADPs. Another commenter also emphasized that guaranteed rates protect consumers from unnecessary tax reconciliation.

Response: We agree with the commenters that requiring guaranteed rates will promote accurate APTC calculation of the pediatric dental EHB portion of premiums, and protect consumers from unnecessary financial burden and uncertainty. As we explained in the proposed rule (87 FR 78284), if an SADP issuer submits an estimated rate and subsequently modifies their actual rate, the Exchanges, including SBEs, SBE–FPs, and FFEs, could incorrectly calculate APTC for the pediatric dental EHB portion of a consumer's premium,[296] which could result in consumer harm. This may also disproportionately impact low-income individuals who may qualify for APTC, who are already disproportionately impacted by limited access to affordable health care. Therefore, we believe this policy will also help advance health equity by ensuring that low-income individuals who qualify for APTC are charged the

[296] Consistent with §§ 156.440(b) and 156.470, APTC may be applied to the pediatric dental EHB portion of SADP premiums.

correct premium amount when enrolling in SADPs on the Exchange.

Comment: One commenter requested clarity on whether the proposed policy also applies to small group SADPs. This commenter explained that as a State, it does not have the authority to review dental rates for small group issuers on- or off-Exchange, and thus it cannot enforce this proposed certification requirement for such issuers. The commenter further explained that if plans cannot be certified without meeting this requirement, that CMS should certify the off-Exchange-only SADPs.

Response: We clarify that the guaranteed rates policy does not apply to SADPs that are not Exchange-certified. SADPs that are not seeking Exchange certification, in either an individual market Exchange or SHOP, will not need to use guaranteed rates under this policy. States will therefore not need to enforce this requirement, but State Exchanges will be required to only certify SADPs that comply with the requirement.

6. Plan and Plan Variation Marketing Name Requirements for QHPs (§ 156.225)

In the HHS Notice of Benefit and Payment Parameters for 2024 proposed rule (87 FR 78206, 78284 through 78285), we proposed to add a new paragraph (c) to § 156.225 to require that QHP plan and plan variation [297] marketing names include correct information, without omission of material fact, and do not include content that is misleading. We stated that, if this policy is finalized, we would review plan and plan variation marketing names during the annual QHP certification process in close collaboration with State regulators in States with Exchanges on the Federal platform.

Section 1311(c)(1)(A) of the ACA states that the Secretary shall establish QHP certification criteria, which must include, at a minimum, that a QHP meet marketing requirements and not employ marketing practices or benefit designs that have the effect of discouraging enrollment by individuals with significant health needs. As we stated in the proposed rule (87 FR 78285), CMS, States, and QHP issuers work together to ensure that consumers can make informed decisions when selecting a health insurance plan based on factors such as QHP benefit design, cost-sharing requirements, and available financial assistance. We also stated that in PY 2022, we received complaints from consumers in multiple States who misunderstood cost-sharing information in their QHP's marketing name. We also stated that upon further investigation, CMS and State regulators determined that language in a number of plan and plan variation marketing names was incorrect or could be reasonably interpreted by consumers as misleading based on information in corresponding plan benefit documentation submitted as part of the QHP certification process.[298]

As we explained in the proposed rule (87 FR 78285), CMS' review of QHP data for PY 2023 indicates continued use of cost-sharing information in plan and plan variation marketing names. We explained in the proposed rule that this proposed policy would address the issues we observed during PY 2022 and again in PY 2023 by requiring all information in plan and plan variation marketing names that relates to plan attributes to align with information that issuers submit for the plan in the Plans & Benefits Template, and in other materials submitted as part of the QHP certification process, such as any content that is part of the Summary of Benefits and Coverage. Also, we stated that plan benefit or cost sharing information in a plan or plan variation marketing name should not conflict with plan or plan variation information displayed on *HealthCare.gov* during the plan selection process in terms of dollar amount and, where applicable, terminology. We refer readers to the proposed rule (87 FR 78284 through 78285) for further discussion of this proposed requirement, including examples illustrating the kinds of information in plan and plan variation marketing names that could mislead consumers through inaccurate information or omission of material facts.

We sought comment on this proposal and whether there are additional methods of preventing consumer confusion and market disruption related to this issue. In particular, we sought comment on the potential to identify components of plan and plan variation marketing names that could be uniformly structured and defined across QHPs for consistency and to ensure that plan and plan variation marketing names complement and do not contradict other sources of plan detail, such as cost-sharing and benefit information, displayed during the plan selection process on *HealthCare.gov* and other enrollment platforms. For example, we sought comment on whether, to address this, we should establish a required format for plan and plan variation marketing names that specifies elements such as name of issuer, metal level, and limited cost-sharing information.

After reviewing the public comments, we are finalizing, as proposed, § 156.225(c) to require that QHP plan and plan variation marketing names include correct information, without omission of material fact, and not include content that is misleading. We will review plan and plan variation marketing names during the annual QHP certification process in close collaboration with State regulators in States with Exchanges on the Federal platform. We summarize and respond to public comments received on the proposed policy below.

Comment: Almost all commenters supported the proposal. A number of commenters agreed that requiring marketing names to be accurate and not misleading would help consumers make more informed plan selections, and choose a QHP that they are ultimately satisfied with. Some commenters added that, like HHS and States, they also heard concerns and complaints from consumers applying for Exchange coverage about inaccurate or misleading marketing names, or marketing names that included extensive detail that they found confusing. One commenter noted that while confusion about marketing names has not been an issue in all States, it would be helpful to have clear Federal policy should the issue arise. Many commenters expressed strong support for continued collaboration between HHS and States in plan and plan variation marketing name oversight. Some commenters requested that HHS not impose any requirements on marketing names in excess of what States already require, or that HHS not make requirements that contradict requirements already in place within a State.

Response: We agree with commenters that requiring plan and plan variation marketing names to be accurate and not misleading will help applicants for Exchange coverage make more informed

[297] In practice, CMS and interested parties often use the term ''plan variants'' to refer to ''plan variations.'' Per § 156.400, plan variation means a zero-cost sharing plan variation, a limited cost sharing plan variation, or a silver plan variation. Issuers may choose to vary plan marketing name by the plan variant—for example, use one plan marketing name for a silver plan that meets the actuarial value (AV) requirements at § 156.140(b)(2), and a different name for that plan's equivalent that meets the AV requirements at § 156.420(a)(1), (2), or (3).

[298] For example, in some cases a plan marketing name described a limited benefit in a way that could be understood as being unlimited, such as a ''$5 co-pay'' when the $5 co-pay was only available for an initial visit. Consumers were concerned upon learning the full extent of the cost-sharing for which they would be responsible during the plan year.

decisions, and have greater confidence that they are choosing the plan that is best for themselves and their families. Moving forward, we will continue working closely with States to review plan and plan variation marketing names by providing information and technical assistance and regularly scheduled calls and coordinating shared review of marketing names during the annual QHP certification process. We will also take existing State requirements into account when overseeing marketing names to prevent contradictory requirements and ensure an efficient plan and plan variation marketing name review process.

Comment: A few commenters opposed the proposal, stating that they generally supported its intent, but disagreed that additional regulation was necessary to achieve its purpose. One commenter stated that States are in a better position than HHS to regulate marketing names, and voiced concern that there could be conflicting recommendations between State and Federal regulators. Another commenter stated that issuers should continue to have the ability to uniquely position their plans in a market through plan marketing names, noting that this practice is often descriptive in nature, and therefore, is not possible to do through other methods of data submission. As examples, the commenter cited terms like ''Freedom plans,'' implying broad access or ''Virtual plans,'' implying enhanced telehealth benefits. This commenter added that they offered Exchange plans with the same marketing convention for the past ten years, and expressed concern about any requirements to change it. Other commenters supportive of the proposal made similar points. For example, other commenters cited terms like ''elite'' or ''premium'' as being important marketing tools to convey advantages of a particular plan. Another recommended exempting marketing names that have been used for three or more years from required correction, with the exception of changes to cost-sharing amounts. The commenter noted that many plans have been offered for five or more years under the same name, and it would be confusing for enrollees to see a new marketing name for the same plan.

Response: We agree with commenters that States are well-positioned to oversee plan and plan variation marketing names. However, based on other public comments and our experiences over the last several years, we believe that Federal partnership is helpful and necessary to ensure that marketing names include only information that is accurate and not misleading. As noted earlier, we will continue to work closely with States to prevent contradictory requirements and ensure State input. We note that certain Federal requirements may exceed those that States currently have in place, such as prohibiting a plan from including in its marketing name ''$0 cost-sharing'' without specifying that it only applies to a limited number of visits, or listing ''$0 deductible'' for a plan that offers a $0 medical deductible but a greater than $0 drug deductible. However, we believe such requirements are important to address the more recent marketing name practices causing problems and we do not anticipate that any such requirements will contradict existing State rules.

We also acknowledge that some issuers have consistently offered plans and plan variations with marketing names that are clear and include correct information. This policy applies to all plan and plan variation marketing names. We will not exempt any marketing names that include errors, such as contradictions with plan benefit information, from required corrections. However, our goal is not to prevent issuers from using marketing names that have not proven problematic in the past. Because inclusion of detailed and sometimes incorrect or misleading plan benefit information in marketing names is a relatively recent practice, we do not anticipate issuers needing to make extensive changes to marketing names already in use for a number of years.

Finally, this policy does not prohibit the use of descriptive language including the terms the commenter cited, such as ''Freedom Plans'' and ''Virtual Plans''; because these terms do not directly correlate with or intend to describe a specific service or benefit, it is unlikely that they would be considered incorrect. However, we encourage issuers to consider this language carefully to ensure it is not misleading. In particular, we encourage issuers to ensure that a plan or plan variation marketing name does not mislead consumers regarding the nature and cost-sharing for telehealth services and in person services, when there are differences between the two.

Comment: Multiple commenters shared concerns about the specific types of inaccurate or confusing marketing name information, some of which we identified in the proposed rule (87 FR 78285). One commenter recommended that issuers not be required to include the term ''deductible'' in marketing names that included a deductible dollar amount, because issuers had long included these dollar amounts in marketing names, and adding an additional term could cause confusion. Some commenters expressed general concerns about lengthy, detailed marketing names, stating that they cause confusion because they are difficult for consumers to understand. One of these commenters made several recommendations to decrease the length of marketing names, such as prohibiting issuers from including the company name in the marketing name because it is already displayed in the *HealthCare.gov* plan compare section, and imposing a character limit to prevent issuers from creating long and complicated plan names. Another commenter recommended limiting marketing names to including only one cost-sharing feature to avoid overwhelming consumers with too much information. One commenter raised the concern that some marketing names advertise features available under all QHPs, such as no restrictions for consumers with pre-existing conditions or full coverage of preventive care free of charge, which increases the length of the marketing name without providing valuable information.

Some commenters also expressed concern about using terms like ''choice'' or ''star'' network to refer to a narrow network, based on the belief that these terms implied an enhanced benefit when the reality was that the plan might provide access to fewer providers than a plan with a broader network that it did not advertise. Commenters also expressed concern about including information in a marketing name that leads consumers to believe that one of more benefits will be covered free of charge, when in fact certain conditions and limitations apply and enrollees cannot access such benefits without incurring significant cost sharing. Commenters also observed that marketing names for CSR variants of silver plans often retain the dollar amount of the deductible or copay of the non-CSR variant plan. In addition, commenters noted that some consumers find it difficult to confirm benefit information with a Summary of Benefits and Coverage (SBC); they cannot determine which SBC corresponds to a plan they have or are considering, because plan and plan variation marketing names do not match the plan name used in the SBC. This commenter recommended that HHS require plan and plan variation marketing names to match the plan name in the corresponding SBC at the level of individual CSR variations.

Response: We appreciate the comments regarding the concerns we cited in the proposed rule about specific

types of incorrect or misleading marketing name information, and appreciate additional issues that commenters raised. We confirm that under this policy, at minimum, we will generally flag for revision plan and plan variation marketing names that include the issues listed in the proposed rule (87 FR 78285) to help ensure consumers are not misled about plans' cost-sharing and coverage implications. However, while we suggested in the proposed rule that dollar amounts that do not specify what they refer to (for example, deductible, maximum out-of-pocket, or something else) could be misleading, based on comments that cited the importance of allowing issuers to continue using longstanding plan and plan variation marketing names, and that encouraged us not to require issuers to include the term ''deductible'' in marketing names that include a deductible dollar amount, we will not require issuers to include cost-sharing terms such as deductible in marketing names that list numbers or dollar amounts. Specifically, while we believe that some consumers might benefit from additional detail about what numbers in a marketing name reference, we are aware that requiring issuers to label all numbers in a marketing name could be counterproductive by lengthening an otherwise concise plan marketing name and requiring that some issuers change marketing names that have long been in use and that comply with existing State rules. Nevertheless, we strongly encourage issuers to carefully consider the information that numbers and dollar amounts are meant to convey. Further, in cases where marketing names specify the type of cost sharing that a number or dollar amount refers to, our review will confirm that this information is accurate. For example, plan and plan variation marketing names that list a deductible amount must be clear whether that amount refers only to medical, drug, or another type of benefit, or simply lists a deductible amount that is inclusive of all these categories to ensure that potential enrollees understand the full cost-sharing requirement.

Additionally, we share concerns that consumers are not always able to fully understand a plan's benefits because of inconsistencies between a plan name used in an SBC and the corresponding plan or plan variation marketing name displayed on *HealthCare.gov.* Moving forward, we will require that these names be consistent and clearly resemble each other, even if a plan or plan variation marketing name includes cost-sharing or other benefit detail that the plan name listed in the SBC does not. This requirement exemplifies the intent of the final policy that we discussed in the proposed rule: by requiring marketing names to be correct, not omit material fact, and not include content that is misleading, we expect that consumers will be able to refer to marketing names as a source of information that supports them in their plan selection process by facilitating their ability to learn more about a potential plan, which includes being able to look up information in other plan materials, instead of exacerbating confusion or making it more difficult to understand plan benefit details. We will also prohibit marketing names from advertising benefits that the ACA requires all Exchange plans to cover as though they were unique to that plan to prevent this information from unnecessarily extending marketing names' length and from implying that certain plans are uniquely advantageous because they provide benefits that in fact all QHPs are required to cover. This requirement mirrors requirements in widely adopted North American Industry Classification (NAIC) model regulations, and therefore, reflects longstanding rules and practice.[299]

Additionally, we have also observed cases of incorrect information in plan variation marketing names for CSR variations that occur because the marketing name retains cost-sharing information from the non-CSR variation plan. Our goals moving forward as part of our review of plan and plan variation marketing names will include making sure that this does not happen. We strongly encourage issuers to proactively update cost sharing information in marketing names to accurately reflect information for CSR plan variations to ensure that their initial QHP application includes accurate information.

We share concerns about the use of potentially misleading terms to refer to narrow networks; while we do not currently plan to prohibit use of general descriptive terms in marketing names, we encourage issuers to carefully consider whether in certain instances, use of these terms could cause or exacerbate existing consumer confusion or mislead consumers regarding a particular plan benefit. We also do not currently plan to prohibit inclusion of issuer names because this could prevent continuity in some marketing names that are not otherwise problematic. We note that current QHP certification instructions already impose a character limit on plan and plan variation marketing names of 255 characters.[300] Moving forward, we will consider whether decreasing this character limit starting in PY 2024 would help to reduce consumer confusion and improve plan data accuracy and the efficiency of the QHP certification process. For example, a character limit of 150 would have permitted more than 90 percent of plan and plan variation marketing names in plan year 2022, while providing a cap to shorten some of the lengthiest marketing names and reduce the risk of unnecessary and confusing information. Finally, we will consider for future PYs the additional recommendations to limit confusion related to plan and plan variation marketing names.

Comment: Some commenters supported the proposal but expressed concern or confusion about the extent and nature of its requirements. Multiple commenters expressed concern about language in the proposed rule noting that information in plan and plan variation marketing names should correspond to benefit information in other plan documents, including the Plans & Benefits Template, *HealthCare.gov* plan selection information, and other applicable QHP certification materials. Some commenters, including several that supported the proposal and one that did not, noted that not all plan information that issuers include in plan marketing names is included in the Plans & Benefits Template. Multiple commenters cited examples of information on benefits that they noted may help to mitigate negative impacts of certain Social Determinants of Health, such as medical transportation and telehealth coverage. One commenter requested that the Plans & Benefits Template not be used as a marketing name generator. Several commenters requested that HHS release guidance on specific requirements for plan and plan variation marketing names under this policy, to mitigate issuer confusion and ensure efficient submission of plan information during the QHP certification process for the coming PY.

Response: We clarify that this policy does not restrict plan and plan variation marketing name content to information only from the Plans & Benefits

[299] See ADVERTISEMENTS OF ACCIDENT AND SICKNESS INSURANCE MODEL REGULATION, Section 6.A(14), which prohibits ''An advertisement that exaggerates the effects of statutorily mandated benefits or required policy provisions or that implies that the provisions are unique to the advertised policy.''

[300] See PY2023 QHP Issuer Application Instructions: Plans & Benefits, Section 4.10: page 2D–17: *https://www.qhpcertification.cms.gov/s/Plans%20and%20Benefits.*

Template, or any other template that issuers submit as part of the QHP certification process. However, information about benefits or any other plan attribute included in a marketing name should not be the sole source of information about that benefit, and it must not conflict with information that appears in other plan documents. In other words, issuers must only include benefit or other plan attribute information in a marketing name that is from other plan documents, such as the Plans & Benefits Template, the SBC, or the plan policy document. For example, references to telehealth coverage, a medical transportation benefit, or to any other plan information in a plan marketing name should be based on, correspond to, and not imply that they are more generous than, information about that benefit from plan policy documents. Further, as previously discussed, information in the plan marketing name should not imply more generous coverage or lower cost sharing than what is true in practice for that plan, including by omitting key benefit details or related restrictions. For example, we have received complaints about plan and plan variation marketing names advertising ''free'' or ''$0'' primary care provider visits, when in fact only virtual or telehealth visits are free of charge. Omission of that limitation on the type of visits that are free can mislead consumers and make it less likely that they will choose a plan based on an accurate understanding of its benefits. Finally, we understand the need for guidance on permitted plan and plan variation marketing name characteristics, and strongly support issuer efforts to ensure that marketing name content is accurate prior to submitting an application for QHP certification.

Comment: One commenter suggested that because applicants for Exchange coverage can view plan and benefit information in a standardized format on the *HealthCare.gov* website, there is no need for standardizing plan and plan variation marketing names. Other commenters stated that because plan and benefit information is available on *HealthCare.gov,* there is no need for plan or plan variation marketing names to include benefit information at all, and CMS should prohibit doing so. Other commenters recommended that rather than impose overly restrictive standards on plan and plan variation marketing names, CMS should work to improve the consumer shopping experience on *HealthCare.gov* to maximize consumer understanding of benefits available through and cost sharing required by different QHP options.

Response: We agree that characteristics of the consumer shopping experience in *HealthCare.gov's* Plan Compare section play an important role in helping consumers to choose a plan that is best for themselves and their family. We also agree that consumers are generally better served by comparing plan benefit information on *HealthCare.gov* Plan Compare, because Plan Compare displays corresponding information for different plans in a comparable way (for example, plan deductibles and other cost sharing information is listed in the same format for each available plan). We disagree that the consistency that Plan Compare offers makes it unnecessary to require that plan and plan variation marketing names be correct and not misleading, because incorrect or misleading information has the potential to harm consumers regardless of whether accurate information is also available. In fact, information from a marketing name that conflicts with or does not match corresponding information on *HealthCare.gov* or another Exchange enrollment platform could create consumer confusion that an Exchange could mitigate with a standard marketing name format designed to complement information from *HealthCare.gov* Plan Compare or another Exchange's enrollment platform. With regard to the suggestion that availability of plan and benefit information on *HealthCare.gov* means there is no need for issuers to include this information in marketing names, we will not prohibit that practice at this time, because our goal for PY 2024 is to ensure that marketing names are accurate and not misleading while permitting issuers, to the extent possible, to continue using marketing names that they have in prior years in order to mitigate issuer burden and avoid consumer confusion. Further, we know that some State rules related to plan and plan variation marketing names include some cost sharing information, and we want to establish rules that complement and do not contradict State policy. Relatedly, as further discussed below, we do not plan to require a specific plan marketing name format for PY 2024, but do view it as a useful potential tool to improve the consumer shopping experience wherever possible, which we will continue to work to do.

Comment: Many commenters supported developing specific standards for plan and plan variation marketing names either for PY 2024 or in future plan years. Some offered suggestions for information that issuers should be permitted or required to include. Commenters also supported establishing a defined format that all marketing names would be required to follow, several citing examples of issuers and States that had already adopted specific formats with success. For example, one commenter noted that Washington's Exchange requires issuers to follow a naming format for standard plans, known as ''Cascade Care'' plans. Specifically, Washington adopted the standard plan naming format of ''[Issuer Name] + Cascade + [Metal Level]'' when implementing standard plans for PY 2021, and found it simplified comparisons for consumers by making it easier for them to use standard plans' comparable plan designs to evaluate the distinctions. Commenters that recommended standardizing plan and plan variation marketing names and that recommended specific types of information generally recommended all or some combination of issuer name, plan metal level, limited cost-sharing information, network type, and HSA eligibility if applicable. Some commenters offered specific suggestions about network information in marketing names with several recommending requiring issuers to include network information in marketing names for similar plans with different networks. Others emphasized that network information in marketing names should not be misleading, and one stated that availability and relative cost of out-of-network benefits is important to some consumers and an indication in the plan name would be a prominent way to signal plan differences in this area.

However, other commenters opposed the development of specific standards, based on concerns that this would limit issuers' ability to convey important plan information about plan characteristics through a marketing name and uniquely position products in the market based on this information. Some commenters raised further concerns that a standard format for plan marketing names that specified permitted types of information could result in the same marketing name for multiple plans, which would cause consumer confusion. Other commenters added that requirements for issuers to offer standardized plan options made it especially important for issuers to be able to use marketing names to illustrate what makes a particular QHP unique in a context of many available options, and that many issuers offer more than one network within a single product network type and use marketing names to make this distinction clear to consumers.

Response: We agree that clear and comparable information is most helpful for consumers during the plan selection process, and we appreciate recommendations on how to design plan marketing names to support consumer decision-making. However, we will not apply a required format for plan and plan variation marketing names for PY 2024, because we want to achieve a balance between overseeing plan marketing names to ensure that they are accurate and not misleading and providing issuers with flexibility to create plan marketing names with information they believe will be useful to consumers. Further, we want to continue to work with interested parties to understand the best methods for ensuring that a marketing name is accurate and clear, but also accounts as needed for distinctions between different plans. For example, we appreciate comments related to helping to ensure that consumers understand plans' provider network information, and will continue to investigate how to improve consumers' experiences in this area. Additionally, we agree with comments that it is important to prevent different plans from having the same plan variation marketing name, and will take this concern into account if we develop standardized requirements for plan and plan variation marketing names.

7. Plans That Do Not Use a Provider Network: Network Adequacy (§ 156.230) and Essential Community Providers (§ 156.235)

In the HHS Notice of Benefit and Payment Parameters for 2024 proposed rule (87 FR 78206, 78285), we proposed to revise the network adequacy and ECP standards at §§ 156.230 and 156.235 to state that all individual market QHPs and SADPs and all SHOP QHPs across all Exchanges must use a network of providers that complies with the standards described in those sections, and to remove the exception that these sections do not apply to plans that do not use a provider network.

In the Exchange Establishment Rule, we established the minimum network adequacy criteria that health and dental plans must meet to be certified as QHPs at § 156.230. In the 2016 Payment Notice, we modified § 156.230(a), in part, to specify that network adequacy requirements apply only to QHPs that use a provider network to deliver services to enrollees and that a provider network includes only providers that are contracted as in-network. We also revised § 156.235(a) to state that the ECP criteria apply only to QHPs that use a provider network. In Part 1 of the 2022 Payment Notice (86 FR 6138), we added paragraph (f) to § 156.230 to state that a plan for which an issuer seeks QHP certification or any certified QHP that does not use a provider network (meaning that the plan or QHP does not condition or differentiate benefits based on whether the issuer has a network participation agreement with a provider that furnishes covered services) is not required to comply with the network adequacy standards at paragraphs (a) through (e) of § 156.230 to qualify for certification as a QHP. In that rule, we also stated that plans that do not utilize a provider network must still comply with all applicable QHP certification requirements to obtain QHP certification, which ensures that any plan that does not comply with applicable QHP certification requirements will be denied QHP certification (86 FR 6138).

We stated in the proposed rule (87 FR 78286) that since 2016, only a single issuer has sought certification on an FFE for a plan that does not use a network. As we explained in the proposed rule, despite lengthy negotiations with this issuer, our experience with this plan convinced us that commenters to Part 1 of the 2022 Payment Notice who raised concerns about the burden plans without networks place on enrollees appear to have been correct, and so, for that reason and the other reasons explained below, we proposed to revisit this policy.

Section 1311(c)(1) of the ACA directs HHS to establish by regulation certification criteria for QHPs, including criteria that require QHPs to ensure a sufficient choice of providers (in a manner consistent with applicable provisions under section 2702(c) of the PHS Act, which governs insured health plans that include a provider network), provide information to enrollees and prospective enrollees on the availability of in-network and out-of-network providers, and include within health insurance plan provider networks those ECPs that serve predominantly low income, medically underserved individuals. We explained in the proposed rule (87 FR 78286) that HHS carries out this directive in part through establishing network adequacy and ECP requirements.

We stated in the proposed rule (87 FR 78286) that when we added paragraph (f) to § 156.230 in Part 1 of the 2022 Payment Notice to except plans that do not use a provider network from meeting the network adequacy standards described at § 156.230(a) through (e), we did not intend to allow a plan to ignore the minimum statutory criteria for QHP certification. We explained that plans without provider networks still are required by section 1311(c)(1)(B) of the ACA to ensure sufficient choice of providers and provide information to enrollees and prospective enrollees on the availability of providers to obtain certification, even though they are not currently subject to §§ 156.230 and 156.235. We also noted that whether a plan that does not use a network provides a sufficient choice of providers is a more nuanced inquiry than a simple assertion that an enrollee can receive benefits for any provider. We explained that for a prospective enrollee, a ''sufficient choice of providers'' likely involves factors like the burden of accessing those providers, including whether there are providers nearby that they can see without unreasonable delay that would accept such a plan's benefit amount as payment in full, or whether they are able to receive all the care for a specific health condition from a single provider without incurring additional out-of-pocket costs. We stated that these are among the factors involved in determining whether a network plan is in compliance with the network adequacy and ECP standards at §§ 156.230 and 156.235 and noted that a plan's compliance with these regulatory standards is one way that HHS can verify that plans meet the statutory criteria that QHPs ensure a sufficient choice of providers, including ECPs.

We stated in the proposed rule (87 FR 78286) that to ensure more effectively that all plans provide sufficient choice of providers and to provide for consistent standards across all QHPs, we believe it would be appropriate to revise the network adequacy and ECP standards at §§ 156.230 and 156.235 to state that all QHPs, including SADPs, must use a network of providers that complies with the standards described in those sections and to remove the exception at § 156.230(f). We explained that consistent standards also would allow for easier comparison across all QHPs in a more comprehensible manner for prospective enrollees. The benefits of easier comparison among plans and other challenges posed by plan choice overload are discussed in more detail in the preamble sections about standardized plan options and non-standardized plan option limits.

We have previously stated that ''nothing in [the ACA] requires a QHP issuer to use a provider network'' (84 FR 6154), and it is true that the ACA includes no standalone network requirement. However, we explained in the proposed rule (87 FR 78286) that, after revisiting the statute, we now

doubt that a plan without a network can comply with the statutory requirement at section 1311(c)(1)(C) of the ACA that ''a plan shall, at a minimum . . . include within health insurance plan networks those essential community providers, where available, that serve predominately low-income, medically-underserved individuals.'' We explained that we have always understood section 1311(c)(1)(C) of the ACA to require all plans to provide sufficient access to ECPs, where available, whether or not the plan included a provider network. But we noted that we have not previously considered whether this specific statutory text is consistent with a policy exempting plans without a network from network adequacy regulations. We stated that we now understand the statute's text to best support a reading that access to ECPs will be provided ''within health insurance networks.''

Additionally, we noted in the proposed rule (87 FR 78286) that under section 1311(e)(1)(B) of the ACA and § 155.1000(c)(2), an Exchange may certify plans only if it determines that making the plans available through the Exchange is in the interests of qualified individuals. We further noted that § 155.1000 provides Exchanges with broad discretion to certify health plans that may otherwise meet the QHP certification standards specified in 45 CFR part 156. We explained that when we implemented section 1311(e)(1)(B) of the ACA at § 155.1000(c)(2) in the Exchange Establishment Rule, we noted that ''an Exchange could adopt an 'any qualified plan' certification, engage in selective certification, or negotiate with plans on a case-by-case basis'' (77 FR 18405). We also explained in the proposed rule (87 FR 78286), that we believe requiring QHPs to use a provider network would be in the interests of qualified individuals and would better protect consumers from potential harms that could arise in cases where QHPs do not use provider networks.[301] For example, we stated that the implementation of a provider network can help mitigate against risks of substantial out-of-pocket costs, ensure access without out-of-pocket costs to preventive services that must be covered without cost sharing, and, in the individual market, facilitate comparison of standardized plan options. Furthermore, we noted that studies have found that provider networks allow for insurer-negotiated prices and controlled (that is, reduced) costs in the form of reduced patient cost sharing, premiums, and service price, as compared with such services obtained out of network.[302] [303]

We stated in the proposed rule (87 FR 78286 through 78287) that the proposed revision would assure HHS that all plans certified as QHPs offer sufficient choice of providers in compliance with a consistent set of criteria for easier comparison across all QHPs and better ensure substantive consumer protections afforded by the ACA without undue barriers to access those protections. We explained that this consistency would be valuable to consumers as it ensures all consumers will have access to a set of providers with whom their plan has contracted in accordance with our established network adequacy and ECP requirements and allows for easier comparison between plans for prospective enrollees. We stated that this would also allow consumers to seek care from providers with whom their plan has negotiated a rate, limiting their potential exposure to out-of-pocket costs under the plan.

Accordingly, under the authority delegated to HHS to establish criteria for the certification of health plans as QHPs, we proposed to remove the exception at § 156.230(f) and to revise §§ 156.230 and 156.235 to state that all individual market QHPs and SADPs and all SHOP plan QHPs across all Exchanges-types must use a network of providers that complies with the standards described in those sections, beginning with PY 2024. We explained in the proposed rule (87 FR 78287) that under this proposal, an Exchange could not certify as a QHP a health plan that does not use a network of providers. However, we solicited comment on whether it is possible to design a plan that does not use a network in a way that would address our concerns about the plan's ability to offer a sufficient choice of providers without excessive burden on consumers, or what regulatory standards such a plan could meet to ensure a sufficient choice of providers without excessive burden on consumers.

We explained in the proposed rule (87 FR 78287) that this proposed requirement would also generally apply to SADPs. We stated that since 2014, the FFEs have received, and approved, QHP certification applications for SADPs that do not use a provider network in every PY. However, we explained that the number of SADPs that do not use a provider network has never accounted for a significant number of Exchange-certified SADPs on the FFEs. We noted that at their most prevalent in PY 2014, only 50 of the 1,521 Exchange-certified SADPs on the FFEs were plans that do not use a provider network. We also noted that in PY 2022, only 8 of the 672 Exchange-certified SADPs on the FFEs were plans that do not use a provider network.

We further explained in the proposed rule (87 FR 78287) that the number of SADPs on the FFEs that did not use a provider network appears to be limited since 2017 to fewer and fewer States; while 9 FFE States had Exchange-certified SADPs that do not use a provider network in PY 2014, only 2 FFE States still had Exchange-certified SADPs that do not use a provider network in PY 2022. We noted that since PY 2021, only 85 counties in Alaska and Montana still have Exchange-certified SADPs that do not use a provider network. We stated that we assumed that the few SADP issuers that still offer SADPs that do not use a provider network on the FFEs in Alaska and Montana only do so because of difficulty in maintaining a sufficient provider network in those States. We further explained that we believe it is reasonable to assume that consumers increasingly gravitate towards SADPs that use a network, given this overall decrease in the availability of SADPs that do not use a provider network. We invited comment to confirm these understandings, as well as comment on the prevalence of SADPs that do not use a provider network offered outside of the FFEs in the non-grandfathered individual and small group markets.

[301] As discussed below, some commenters asserted that the requirement to use a network of providers to obtain certification contravenes section 1311(e)(1)(B)(i) of the ACA, which states that an ''Exchange may not exclude a health plan . . . on the basis that such plan is a fee-for-service plan,'' and that ''fee-for-service plans'' are understood to be ''a type of non-network plan.'' While we respond to this comment in more detail below, we clarify that our reference here to section 1311(e)(1)(B)(i) of the ACA specifically pertains to our finding that—at least in an FFE that the agency operates—using a network of providers is generally in the interests of qualified individuals. It does not address whether fee-for-service plans are in the interests of qualified individuals.

[302] Benson NM, Song Z. Prices And Cost Sharing For Psychotherapy In Network Versus Out Of Network In The United States. Health Aff (Millwood). 2020 Jul;39(7):1210–1218. *https://www.healthaffairs.org/doi/10.1377/hlthaff.2019.01468.*

[303] Song, Z., Johnson, W., Kennedy, K., Biniek, J. F., & Wallace, J. Out-of-network spending mostly declined in privately insured populations with a few notable exceptions from 2008 to 2016. Health Aff. 2020;39(6), 1032–1041.

TABLE 11: Prevalence of Exchange-Certified SADPs that Do Not Use a Provider Network on the FFEs, Plan Years 2014-2023 *

Plan Year	SADPs Without Provider Networks	SADPs With Provider Networks	FFE States with SADPs Without Provider Networks	Counties (#) with SADPs Without Provider Networks	% Counties in Affected FFE States with Only SADPs Without Provider Networks
2023	15	684	2; Alaska and Montana	85	AK: 90%, MT: 0% (every county had plans with provider network options)
2022	8	672	2; Alaska and Montana	85	AK: 90%, MT: 0% (every county had plans with provider network options)
2021	17	688	4; Alaska, Montana, North Dakota, Wyoming	85	0% in all affected FFE States
2020	17	736	4; Alaska, Montana, North Dakota, Wyoming	161	100% in all affected FFE States (the only SADP options in affected counties were plans without provider networks)
2019	38	893	5; Alaska, Montana, Nebraska, North Dakota, Wyoming	162	100% in all affected FFE States (the only SADP options in affected counties were plans without provider networks)
2018	40	932	6; Alaska, Montana, Nebraska, North Dakota, Utah, Wyoming	163	100% in all affected FFE States (the only SADP options in affected counties were plans without provider networks)
2017	41	1,053	5; Alaska, Montana, Nebraska, North Dakota, Oregon, Wyoming	197	0% in all affected FFE States (every county had plans with provider network options)
2016	15	1,045	5; Alaska, Montana, Oregon, South Dakota, Wyoming	210	0% in all affected FFE States (every county had plans with provider network options)
2015	17	1,128	4; Montana, Ohio, South Dakota, Wyoming	233	0% in all affected FFE States (every county had plans with provider network options)
2014	50	1,521	9; Alaska, Iowa, Idaho, Missouri, Montana, Nebraska, South Carolina, South Dakota, Wyoming	571	0% in all affected FFE States (every county had plans with provider network options)

* Data for the number of SADPs sourced from Health Insurance Exchange Public Use Files (Exchange PUFs), available at *https://www.cms.gov/CCIIO/Resources/Data-Resources/marketplace-puf.*

We explained in the proposed rule (87 FR 78288) that, given the overall lack of popularity of SADPs that do not use a provider network, we believe that consumers find that such plans do not offer the same levels of protections against out-of-pocket costs as network plans. Thus, we stated that we believe it would be appropriate to revise §§ 156.230 and 156.235 so that all SADPs must use a network of providers that complies with the standards described in those sections as a condition of QHP certification, beginning with PY 2024.

However, we explained in the proposed rule (87 FR 78288 through 78289) that we were cognizant that it can be more challenging for SADPs to establish a network of dental providers based on the availability of nearby

dental providers, and we were aware this proposal could result in no SADPs offered through Exchanges in States like Alaska and Montana, which have historically offered SADPs without provider networks (see Table 11). We also expressed our awareness that having no Exchange-certified SADPs offered through an Exchange in an area would impact all non-grandfathered individual and small group health plans in such areas. We noted that without an SADP available on the respective Exchange, all non-grandfathered individual and small group health plans in impacted areas would be required to cover the pediatric dental EHB. We noted that section 1302(b)(4)(F) of the ACA states that if such an SADP is offered through an Exchange, another health plan offered through such Exchange shall not fail to be treated as a QHP solely because the plan does not offer coverage of pediatric dental benefits offered through the SADP.

As we explained that in the EHB Rule (78 FR 12853), we operationalized this provision at section 1302(b)(4)(F) of the ACA to permit QHP issuers to omit coverage of the pediatric dental EHB if an Exchange-certified SADP exists in the same service area in which they intend to offer coverage. We further explained in the proposed rule (87 FR 78289) that as a corollary, if no such SADP is offered through an Exchange in that service area, then all health plans offered through the Exchange in that service area would be required to provide coverage of the pediatric dental EHB, as section 2707(a) of the ACA requires all non-grandfathered plans in the individual and small group markets to provide coverage of the EHB package described at section 1302(a) of the ACA. However, we stated in the proposed rule that to our knowledge, at least one Exchange-certified SADP has been offered in all service areas nationwide since implementation of this requirement in 2014, and no Exchange has required a medical QHP to provide coverage of the pediatric dental EHB in this manner. We solicited comment to confirm this understanding.

As we stated in the proposed rule (87 FR 78289), to prevent a situation where this proposal would require health plans in those areas to cover the pediatric dental EHB, we solicited comment on the extent to which we should finalize a limited exception to this proposal only for SADPs that sell plans in areas where it is prohibitively difficult for the issuer to establish a network of dental providers; we also clarified that this exception would not be applicable to health plans. We explained that under such an exception, we could consider an area to be ''prohibitively difficult'' for the SADP issuer to establish a network of dental providers on a case-by-case basis, taking into account a number of non-exhaustive factors, such as the availability of other SADPs that use a provider network in the service area, and prior years' network adequacy data to identify counties in which SADP issuers have struggled to meet standards due to a shortage of dental providers. We stated that other factors could include an attestation from the issuer about extreme difficulties in developing a dental provider network, or data provided in the ECP/network adequacy (NA) template or justification forms during the QHP application submission process that reflect such extreme difficulties. We sought comment on whether it would be appropriate to finalize such an exception in this rule, other factors that we might consider in evaluating whether an exception is appropriate, as well as alternative approaches to such an exception.

We sought comment on this proposal, as well as on other topics included in this section.

After reviewing the public comments, for the reasons set forth in this final rule and those we explained in the proposed rule, subject to the exception discussed below, we are finalizing the proposal to revise the network adequacy and ECP standards at §§ 156.230 and 156.235 to require all individual market QHPs, including individual market SADPs, and all SHOP QHPs, including SHOP SADPs, across all Exchanges to use a network of providers that complies with the standards described in those sections. In addition, as proposed, we are also removing from the regulation text the exception at § 156.230(f) that these sections do not apply to plans that do not use a provider network. Finally, we are finalizing a limited exception at § 156.230(a)(4) for certain SADP issuers that sell plans in areas where it is prohibitively difficult for the issuer to establish a network of dental providers. Specifically, under this exception, an area is considered ''prohibitively difficult'' for the SADP issuer to establish a network of dental providers based on attestations from State departments of insurance in States with at least 80 percent of their counties classified as Counties with Extreme Access Considerations (CEAC) that at least one of the following factors exists in the area of concern: a significant shortage of dental providers, a significant number of dental providers unwilling to contract with Exchange issuers, or significant geographic limitations impacting consumer access to dental providers.

We summarize and respond to public comments received on this proposal below.

Comment: A majority of commenters supported the proposal to require plans to use a network of providers that complies with the standards in §§ 156.230 and 156.235. Commenters agreed that such a requirement is consistent with statutory requirements at section 1311(c)(1)(B) and (C) of the ACA. Some commenters indicated that the proposal would allow easier comparison across all QHPs in a more comprehensible manner for prospective enrollees. Commenters agreed that the proposal would ensure consumer choice and access to care, as it would ensure that QHPs do not impose excessive burden on enrollees to understand whether they would incur additional out-of-pocket costs by their plan or to identify which providers within a reasonable distance from their residence accept the plan's benefit amount as payment in full. Other commenters agreed with the proposal, asserting that health plans that do not use a network of providers are not in consumers' interests, as they are more likely to subject consumers to increased medical costs. Other commenters agreed that this requirement should apply to SADPs. Some commenters supported the proposal, stating that plans that do not use a provider network have historically presented a barrier to consumers' ability to access care and control their health care costs, unnecessarily expose people to potential medical debt, and are not in the interests of consumers shopping for QHPs.

Response: Subject to a limited exception described below applicable to SADPs, we are revising the network adequacy and ECP standards at §§ 156.230 and 156.235 to state that all individual market QHPs, including individual market SADPs, and all SHOP QHPs, including SHOP SADPs, across all Exchanges must use a network of providers that complies with the standards described in those sections, and to remove the exception at § 156.235(f) that these sections do not apply to plans that do not use a provider network. We are finalizing this requirement, agreeing with commenters that subjecting all plans that apply for certification to the network adequacy and ECP standards at §§ 156.230 and 156.235 allows for proper oversight of the statutory requirements at section 1311(c)(1)(B) and (C) of the ACA. As discussed below, while plans that use a network of providers may present certain access issues for consumers,

their compliance with §§ 156.230 and 156.235 ensures that consumers have reasonable access to a set of providers that accept the plan's payment as payment in full, which limits consumers' out-of-pocket costs. In addition, we are not aware of any administrable regulatory standard that would ensure that plans that do not use a network comply with those sections of the ACA. Commenters responding to this proposal also did not identify a regulatory standard that we believe that we could administer to ensure compliance with the ACA, as further discussed below.

Comment: A minority of commenters, including one health insurance issuer, opposed the proposal and asserted that the exception at § 156.230(f) should be retained. These commenters asserted that the proposal to require QHPs to utilize a provider network contravenes section 1311(e)(1)(B)(i) of the ACA, which states that an ''Exchange may not exclude a health plan . . . on the basis that such plan is a fee-for-service plan,'' and they state that ''fee-for-service plans'' are understood to be ''a type of non-network plan.'' Commenters also asserted that HHS impermissibly justifies the requirement that QHPs must use a network of providers because only plans with networks can satisfy section 1311(c)(1)(C) of the ACA regarding the ECP requirement for certification. One commenter stated that HHS should develop alternative regulatory standards for plans that do not use a network to demonstrate compliance with section 1311(c)(1)(B) and (C) of the ACA, recommending that HHS should look to Medicare Advantage program standards as an example.

Response: We do not agree that the requirement for QHPs to utilize a provider network conflicts with section 1311(e)(1)(B)(i) of the ACA. Section 1311(e)(1) and (e)(1)(B)(i) of the ACA states that an Exchange may certify a health plan as a QHP if such plan meets the requirements for certification as promulgated by the Secretary under section 1311(c)(1) of the ACA and the Exchange determines that making available such health plan through such Exchange is in the interests of qualified individuals and qualified employers in the State in which such Exchange operates, except that the Exchange may not exclude a health plan, among other reasons, on the basis that such plan is a fee-for-service (FFS) plan. In requiring all plans to use a network, we are exercising the authority granted to the Secretary at section 1311(c)(1)(A) of ACA to establish requirements for the certification of health plans as QHPs, though we are also informed by the requirement for certification at section 1311(e) of the ACA, which states that an Exchange must determine that making available such health plan through such Exchange is in the interests of qualified individuals and qualified employers in the State or States in which such Exchange operates, and which we determine when evaluating plans for QHP certification on an FFE.

In so doing, we are not excluding FFS plans from obtaining certification on the basis that such plans are FFS plans and categorically not in the interests of qualified individuals and qualified employers. We are establishing that plans that do not use a network of providers are inherently unable to comply with the statutory requirement at section 1311(c)(1)(C) of the ACA because that section requires health plans certified as QHPs to ''include [ECPs] within health insurance plan networks.'' That health plans must include ECPs within health insurance plan networks as one of the criteria for certification is a straightforward reading of the language at section 1311(c)(1)(C) of ACA. This statutory language does not provide an exception for plans that do not use a network of providers or FFS plans; it simply states, ''. . . to be certified, a plan shall, at a minimum—(C) include [ECPs] within health insurance plan networks . . .'' Our interpretation that this language requires health plans to use a network of providers to obtain certification is supported by statute. We believe that section 1311(c)(1)(B)'s requirement that plans must provide a ''sufficient choice of providers'' on which the commenter relies in fact provides additional legal support for our regulation. As discussed below, section 1311(c)(1)(B) of the ACA encompasses the burden of accessing providers, and our experience with health plans that do not use a network of providers seeking QHP certification suggests that such plans impose significant burdens on enrollees seeking access to providers.

Commenters' suggestion is based on equating FFS plans to plans that do not use a network of providers. We disagree that FFS plans never use a network of providers. For example, while commenters rely on the Office of Personnel Management's subregulatory definition of ''non-PPO'' FFS plans—which are indeed FFS plans that do not involve a network—they overlook the definition of ''Fee-for-Service (FFS) with a Preferred Provider Organization (PPO)'' plan that follows, which acknowledges that there are FFS plans that use a network.[304] Similarly, the commenters' citation to our 1997 statement in the **Federal Register** suggesting that Medicare private FFS plans often lacked networks overlooks that even then, section 1852(d) of the Social Security Act (the Act) *allowed* private FFS plans to include a network [305]—and that provision has since been amended to encourage and sometimes require that Medicare private FFS plans use a network.[306] Because FFS plans include plans with and without networks of providers, we disagree that a statutory prohibition on not certifying plans based on the fact that they are FFS plans impliedly prohibits not certifying plans on the basis that they lack a provider network.

Thus, we find that commenters are incorrect that FFS plans never use a network of providers. However, even if the commenters' assertions were accurate, section 1311(e)(1)(B)(i) of the ACA would not prevent finalization of this requirement. First, we principally proposed this rule under our authority to set requirements under section 1311(c) of the Act, and we do not believe section 1311(e)(1)(B)(i) of the ACA—directed at the authority of Exchanges—necessarily limits our general rulemaking authority under section 1311(c) of the ACA. Nor does section 1311(e)(1)(B)(i) of the ACA override our interpretation of the requirement at section 1311(c)(1)(C) of the ACA that all plans must use a network as a requirement for certification. In addition, even if section 1311(e)(1)(B)(i) of the ACA also limited section 1311(c) of the ACA, the prohibition at section 1311(e)(1)(B)(i) of the ACA is based on how the plan pays providers for services rendered, and not on the absence or presence of a network of providers.

In addition, even if we did not interpret the ACA to require the use of a network of providers for certification, we are not aware of any administrable regulatory standard to assess whether a plan that does not use a network of providers ensures a sufficient choice of providers, including ECPs, as required by sections 1311(c)(1)(B) and (C) of the ACA. While it may be true that enrollees in plans that do not use a network may visit any provider (and thus all ECPs)

[304] *https://www.opm.gov/healthcare-insurance/healthcare/plan-information/plan-types/#:~:text=Fee%2Dfor%2DService%20(FFS)%20Plans%20with%20a%20Preferred,to%20file%20claims%20or%20paperwork.*

[305] See Public Law 105–33, section 4001, 111 Stat. 290–91 (1997).

[306] See Public Law108–173, section 211, 117 Stat. 2180 (2003); Pub. L. 110–275, section 162, 122 Stat. 2569–70 (2008).

and receive some reimbursement from the plan, the possibility of the enrollee receiving *some* reimbursement for any benefit from any provider is not the same as the plan providing enough reimbursement for those benefits, such that the enrollee has reasonable access to sufficient providers that would accept the plan's payment amount as payment in full. As discussed in the proposed rule (87 FR 78286), for a prospective enrollee, the analysis of whether a plan ensures a sufficient choice of providers, and thus provides sufficient protection against additional out-of-pocket costs, involves factors like the burden of accessing those providers, including whether there are providers nearby that they can see without unreasonable delay that will accept such a plan's benefit amount as payment in full. Thus, we cannot conclude that such a plan *de facto* complies with these statutory requirements simply because it provides *some* reimbursement to its enrollees for any benefit.

Further, we are unaware of an administrable regulatory standard that would allow us to determine whether such a plan's benefit amount would be accepted as payment in full by any provider, such that an enrollee's out-of-pocket costs may be limited by receiving services from that provider. Such a plan cannot impose on providers any obligation to set a certain price for a specific service, and there is no requirement imposed by the plan on providers to accept the plan's payment as payment in full. The plan cannot prevent a provider from changing the price for a specific service, nor can it require that a provider communicate the price change to the enrollee or their plan. Likewise, no Federal requirements prohibit such individual market plans from changing the amount the plan pays for a given service or require the plan to communicate the change to the enrollee or their provider, even mid-plan year. As a result, the enrollee is subject to a plan that can change its benefit amount, and there is no assurance that any provider will actually accept the payment amount as payment in full; these changes could occur frequently and without any notice to the enrollee. To attempt to ascertain whether there are sufficient providers (including ECPs) who will accept the plan's benefit amount as payment in full, one would need to accurately understand what services are medically necessary, continuously contact every provider in the State to determine what services they perform and what amount they charge for every specific service, *and* continuously contact the plan to determine the amount they pay for every specific service. Such an exercise is prohibitively difficult for a consumer to perform, and we have been unable to devise an administrable regulatory standard to ensure compliance with the ACA's network adequacy and ECP requirements.

Further, even if it were theoretically possible to devise such a requirement, we are not aware of any statutory authority to require providers continuously to report what amount they would accept as payment in full, either to an Exchange, a plan, or individuals—significantly inhibiting an Exchange's ability to enforce such a standard. And, even if we had such statutory authority, there is insufficient demand that HHS dedicate the significant resources necessary to devise a regulatory standard for plans that do not use a network to demonstrate compliance with section 1311(c)(1)(C) of the ACA. We are aware of a single health plan that does not use a network of providers in one State that seeks to obtain certification for the State's Exchange. No other issuer has expressed interest to us in obtaining certification for such a plan, and the majority of comments on this rule supported the proposal to require health plans to use a network to obtain certification.

One commenter suggested that we consider implementing a regulatory standard that considers Medicare Advantage private FFS plan requirements. We do not find Medicare Advantage private FFS plans to be comparable to plans without networks seeking QHP certification under the ACA. Section 1852(d) of the Act requires Medicare Advantage private FFS plans to demonstrate to the Secretary that the organization has sufficient number and range of health care professionals and providers willing to provide services under the terms of the plan. Further, Medicare Advantage private FFS plans are defined in section 1859(b)(2) of the Act as a plan that, among other things, ''does not restrict the selection of providers among those who are lawfully authorized to provide the covered services and agree to accept the terms and conditions of payment established by the plan.'' As a result, in the Medicare Advantage context, private FFS enrollees are more protected from unexpected out-of-pocket costs.[307] This may not hold true in the Exchange context. The one issuer that has previously sought QHP certification for a plan that did not use a network of providers would not have required any provider to agree to any particular terms or conditions of payment. Unlike Medicare Advantage private FFS plans, then, we are concerned that Exchange plans without networks leave uncertainty as to whether any provider accepts a plan's benefit amount as payment in full and potentially opens up the enrollee to additional out-of-pocket costs.

Comment: Some commenters asserted that the proposed rule fails to provide a balanced discussion of the data on provider network strengths and weaknesses or acknowledge the merits of plans that do not use a provider network.

Response: In requiring plans to use a network of providers to obtain QHP certification, we are not representing that plans that use a network of providers do not present certain access issues. For example, we recognize that such plans place the burden on enrollees to ensure that specific providers are in-network, while a plan that does not use a network of providers does not place a such a burden on its enrollees to receive some benefit under the plan. We also recognize that some networks are narrower than some enrollees may prefer, which can result in enrollees needing to travel further or wait longer to receive care from an in-network provider, while enrollees in a plan that does not use a network of providers may not need to travel as far or wait as long to receive some benefit under their plan. However, unlike plans that do not use a network of providers, there is an administrable regulatory standard to ensure that plans that use a network of providers comply with sections 1311(c)(1)(B) and (C) of the ACA; to that end, since 2014, we have required that plans that use a network of providers comply with the network adequacy and ECP standards at §§ 156.230 and 156.235. Plans that comply with these standards ensure that their enrollees have access to sufficient providers who are contractually obligated to accept the plan's payment amount as payment in full. This is a consumer protection that plans that do not use a network cannot provide to its enrollees, and one that we believe is consistent with core tenets of the ACA—

[307] Because sections 1852(k)(1) and 1866(a)(1)(O) of the Act require health care providers and hospitals to accept Medicare-established amounts as payment in full, Medicare Advantage private FFS plans can rely on the availability of providers that accept Medicare as one way to demonstrate access to services for their enrollees. In addition, since 2011, Medicare Advantage (MA) private FFS plans that are offered in areas where there are at least two other MA plans that are network-based plans, must use contracts or agreements with providers as the only way to demonstrate that the private FFS plan provides adequate access to services. See 42 CFR 422.114.

that consumers have access to a plan that provides a reasonable method to limit their out-of-pocket costs for health care to the annual limitation on cost sharing.

Comment: One commenter requested that HHS clarify whether the definition of ''provider'' includes pharmacies in the context of network adequacy and ECP standards.

Response: While we have not defined the term ''provider'' in the context of the network adequacy standards, we provide a list of the individual provider and facility specialty types that are included in the network adequacy reviews within the 'Specialty Types' tab of the respective plan year ECP/NA template. If an issuer does not see a specific specialty type listed in the 'Specialty Types' tab, it should refer to the 'Taxonomy Codes' tab of the ECP/NA template to select the correct specialty type to which the taxonomy code crosswalks. If a specific taxonomy code is not listed in the 'Taxonomy Codes' tab, such as in the case of pharmacies, the provider type has not been included in the FFE network adequacy reviews. In the context of the ECP standards, although we have not defined the term ''provider,'' we list the provider types that are included in the ECP categories at § 156.235(a)(2)(ii)(B), which does not include pharmacies.

Comment: Some commenters, including two State departments of insurance (Alaska and Montana), were in favor of a limited exception to this requirement for SADPs that sell plans in areas where it is prohibitively difficult for the issuer to establish a network of dental providers. These commenters confirmed our analysis that it may be currently prohibitively difficult for SADP issuers to establish a network of dental providers in Alaska and Montana, and that without an exception to the proposed requirement, consumer access to any SADP would be in jeopardy. Commenters supported the use of the list of non-exhaustive factors that we would consider in determining whether it is prohibitively difficult for SADP issuers to establish a network of dental providers, such as the availability of other SADPs that use a provider network in the service area, and prior years' network adequacy data to identify counties in which SADP issuers have struggled to meet standards due to a shortage of dental providers. In addition, commenters specifically mentioned as barriers geographic barriers and providers' unwillingness to enter into provider contracts. A handful of commenters suggested that State regulators should decide whether to allow non-network plans to be certified as QHPs on an Exchange. One commenter recommended that we implement this ''prohibitively difficult'' approach for allowing certain SADPs to not use a provider network with a pre-approved form for SADPs to request the exception and permit an abbreviated filing for subsequent years if a SADP filed the full request in a prior year. This commenter also requested clarification that the ''prohibitively difficult'' exception does not require an attestation, as well as clarification as to the meaning of ''extreme difficulties'' in developing a dental provider network.

Response: We are finalizing this proposal with a limited exception for SADPs that sell plans in areas where it is prohibitively difficult for the issuer to establish a network of dental providers. This limited exception follows logically from how the requirements in sections 1311(c)(1)(B) and (C) of the ACA that plans ensure a sufficient choice of providers, including ECPs, apply in the unique SADP context. As commenters point out, if creating a network of dental providers is prohibitively difficult for SADPs in certain areas, it is foreseeable that there may be some areas where SADPs could not be Exchange-certified (in Alaska and Montana, for example). That risks there being no SADPs in that area and thus no choice of dental providers through SADPs at all. Thus, in this limited context, requiring a network would defeat the purpose of sections 1311(c)(1)(B) and (C) the ACA to ensure that enrollees have a sufficient choice of providers.

We find additional support for this exception in section 1302(b)(4)(F) of the ACA, which states that if an SADP is offered through an Exchange, another health plan offered through such Exchange shall not fail to be treated as a QHP solely because the plan does not offer coverage for pediatric services, including pediatric dental benefits. Without an Exchange-certified SADP available on the Exchange in those areas, all non-grandfathered individual and small group health insurance plans in impacted areas would be required to cover the pediatric dental EHB, and would be required to develop a network of pediatric dental providers in accordance with the policy finalized in this rule. Imposing this certification requirement on these health plans would likely cause health plans in the area to fail this certification requirement, as SADPs would have already established the difficulty in creating pediatric dental networks in this area. The ultimate result would be that QHPs may not be available on the respective Exchange in those areas, as all non-grandfathered individual and small group health insurance plans in the State would not be permitted to omit coverage of the pediatric dental EHB.

This limited exception will be codified at § 156.230(a)(4). Under this exception, we will consider an area to be one where it is ''prohibitively difficult'' for the SADP issuer to establish a network of dental providers based on attestations from State departments of insurance in States with at least 80 percent of their counties classified as CEAC that at least one of the following factors exists in the area of concern: a significant shortage of dental providers, a significant number of dental providers unwilling to contract with Exchange issuers, or significant geographic limitations impacting consumer access to dental providers. For purposes of its network adequacy standards, CMS uses a county type designation method that is based on the population size and density parameters of individual counties. These parameters are foundationally based on approaches used by the U.S. Census Bureau in its classification of ''urbanized areas'' and ''urban clusters,'' and by the Office of Management and Budget (OMB) in its classifications of ''metropolitan'' and ''micropolitan.'' The CEAC county type designation is based on a U.S. Census Bureau population density estimate of fewer than 10 people per square mile.

This approach was informed by comments submitted in response to our solicitation for comments regarding if and/or how we should design a limited exception for SADP issuers. The States of Alaska and Montana were the only two States that expressed a need for this limited exception in their public comments, and are the only two States with FFEs that have had SADPs without a provider network for the past two years. The State of Alaska noted that out of the 2,200 people in the country enrolled in SADPs without provider networks in 2021, approximately 1,000 of those individuals resided in Alaska. The State of Alaska requested in its public comment that if HHS proceeds with requiring SADPs to use a provider network that we include a limited exception for SADPs in areas where it is prohibitively difficult to establish a network, noting that 90 percent of counties in Alaska with Exchange-certified SADPs without provider networks have no Exchange-certified SADPs with provider networks. Furthermore, the State of Montana stated in its public comment that they have unique challenges as it pertains to health care delivery and access, including geographic barriers to care and a limited number of dentists

practicing in Montana who are willing to contract with issuers. The State of Montana strongly supported HHS establishing an exception to the provider network requirement for SADPs in areas where it is difficult for issuers to establish SADPs with provider networks based on information supporting such an exception, including data provided in an issuer's ECP/NA template.

These comments submitted by the States of Alaska and Montana, combined with data provided in issuers' ECP/NA templates or justification forms, demonstrate that in States with 80 percent or more of their counties classified as CEAC (that is, Alaska, Montana, North Dakota, and Wyoming), it is prohibitively more difficult for issuers to establishing a network of dental providers compared with issuers in States with fewer than 80 percent of their counties classified as CEAC, as evidenced by the limited availability of SADPs that use a provider network in these States and/or the limited number of contracted dentists. Given that our network adequacy time and distance standards allow for an issuer to receive credit for a provider across county/State lines so long as the provider is within the requisite time and distance of consumers in the respective county, issuers operating in States with fewer than 80 percent of their counties classified as CEAC have performed better overall with respect to meeting network adequacy standards than issuers in Alaska, Montana, North Dakota, and Wyoming, demonstrating that States with fewer than 80 percent of their counties classified as CEAC are not in need of this exception. Therefore, limiting this SADP exception to States with 80 percent or more of their counties classified as CEAC aligns with our solicitation for comments regarding whether we should consider the availability of other SADPs that use a provider network in the service area and prior years' network adequacy data submitted in issuers' ECP/NA templates or justification forms to identify counties in which SADP issuers have struggled to meet standards due to a shortage of dental providers.

We expect that States, in determining whether an area has been impacted by at least one of the above factors to the degree of being considered ''prohibitively difficult'' for SADP issuers to establish a network of dental providers, will take into account a number of non-exhaustive factors, such as the availability of other SADPs that use a provider network in the service area and prior years' network adequacy data to identify counties in which SADP issuers have struggled to meet standards due to a shortage of dental providers. Other factors could include extreme difficulties in developing a dental provider network, or data provided in the ECP/NA template or justification forms during the QHP application submission process that reflect such extreme difficulties, and geographic barriers. Where we have determined that an area is one where it is ''prohibitively difficult'' for the SADP issuer to establish a network of dental providers based on attestations from State departments of insurance, all SADPs that are seeking Exchange certification and that are offering coverage in that area will be exempt from the requirement to use a provider network. In areas for which we have not made such a determination, SADP issuers may still avail themselves of the written justification process at § 156.230(a)(2)(ii).

We also believe that this limited exception is justified for SADPs in part because, unlike health plans, dental-only coverage constitutes an excepted benefit under section 2791(c)(2)(A) of the PHS Act. In addition, there is limited exposure to unanticipated out-of-pocket costs for pediatric dental EHB in SADPs that do not use a network of providers, and there are a relatively small number of pediatric dental EHBs that are covered by such a plan. Collectively, these factors significantly limit the potential that those receiving pediatric dental EHB will experience excessive out-of-pocket costs. Thus, we are not extending this limited exception to health plans. No commenters indicated that it is prohibitively difficult for health plans to establish a network of providers that complies with §§ 156.230 and 156.235 (or sections 1311(c)(1)(B) or (C) of the ACA) or that such a requirement may result in the inability for health plans to be certified as QHPs in specific areas. As a result, we are codifying the limited exception for SADPs only at this time.

We will operationalize this limited exception beginning with certification for PY 2024 and anticipate that States will apply for this exception and include a justification for requiring an exception. We envision providing SADP issuers and States ample guidance in advance of PY 2024, and in any event, envision working closely with State regulators in these areas. We considered allowing issuers to apply for an exception, but we believe that State regulators are better positioned to make recommendations to HHS, as they know the challenges of their markets. We also believe that the conditions for granting or not granting an exception would not exist at an issuer level, but instead at a county or service area level, such that issuer-specific applications would be inappropriate.

Compliance With Appointment Wait Time Standards

In the HHS Notice of Benefit and Payment Parameters for 2024 proposed rule (87 FR 78206, 78289), we noted that in the 2023 Payment Notice, we finalized the requirement that issuers demonstrate compliance with appointment wait time standards via attestation, beginning in PY 2024.

We received numerous comments in response to the finalized policy from the 2023 Payment Notice raising concerns regarding the implementation of appointment wait time standards for QHP issuers beginning in PY 2024. In response to the public comments, we are amending § 156.230(a)(2)(i)(B) to delay applicability of this standard until PY 2025. We summarize and respond to public comments received below.

Comment: Most commenters opposed applying appointment wait time standards beginning in PY 2024 and requested delayed implementation to PY 2025. Several commenters highlighted the need for HHS to issue additional guidance necessary for issuers to comply with appointment wait time standards, and to allow the industry time to comment on that guidance. Many commenters noted the lack of specificity around how appointment wait times would be assessed and how issuers could attest without a standard metric. Other commenters were concerned that States do not have the tools to assess compliance or additional resources to conduct compliance activities. A few commenters were concerned with the following barriers to implementation: the burden on providers to report data to issuers; the operational challenges in monitoring contracted providers; the difficulty in receiving accurate wait time data from providers; and fluctuations in appointment wait times during the PY. Other commenters noted workforce staffing, recruiting, and retention challenges as additional barriers. By contrast, a few commenters supported implementing the appointment wait time policy on the finalized schedule so that consumers have access to timely necessary care. Others supported the standard but requested that the methodology for assessing compliance include additional methodologies other than issuer attestation.

Response: As noted above, we agree with the many commenters that implementation of the appointment wait

time standards should be delayed by one PY. We are amending the regulation to delay the applicability of the appointment wait time standards until PY 2025. We are also aware of other HHS initiatives to define and implement appointment wait times standards for other program areas. The additional PY delay will allow HHS to ensure that these wait time standards are implemented in a holistic, logical way across programs. Accordingly, QHP issuers in FFEs will have one additional PY before being required to attest to meeting appointment wait time standards.

As we noted in the 2023 Payment Notice, specific guidelines for complying with appointment wait time standards will be released in later guidance. This will allow us additional time to develop specific guidelines for how issuers should collect the requisite data from providers, how the metrics should be interpreted, and for public comment on the proposed guidance. Issuers that do not yet meet the appointment wait time standards once implemented in PY 2025, will be able to use the justification process to update HHS on the progress of their contracting efforts for the respective plan year.

We encourage issuers that have implemented monitoring and data collection of provider appointment wait times to continue to do so. However, under this new timeline, we will not be actively collecting or requiring submission of any data or attestations for compliance with the standards for purposes of QHP certification for PY 2024.

Comment: Some commenters noted the proposed rule would require QHPs on all Exchanges to comply with network adequacy standards but that appointment wait time criteria would only apply to issuers in FFEs. Others requested that HHS establish Federal appointment wait time standards that would be applicable to issuers in all Exchanges, including State Exchanges.

Response: As we noted in the 2023 Payment Notice (87 FR 27334), we appreciate these comments and understand that there are diverse opinions regarding the appropriate regulator for network adequacy standards in State Exchanges. We will monitor existing network adequacy standards in State Exchanges relative to the Federal standards and will consider whether applying Federal standards to issuers in State Exchanges in future PYs is warranted.

Comment: One commenter requested revisions to the wait time standards for dental issuers and to reduce the required wait time standard compliance percentage from 90 percent to 80 percent during the first 3 years. A few commenters requested that the appointment wait time standards be applicable to pediatric providers separately.

Response: We appreciate the detailed recommendations around appointment wait times and we will take these comments under advisement as we continue to specify the Federal appointment wait time standards.

8. Essential Community Providers (§ 156.235)

In the HHS Notice of Benefit and Payment Parameters for 2024 proposed rule (87 FR 78206, 78289), we proposed to expand access to care for low-income and medically underserved consumers by strengthening ECP standards for QHP certification, as discussed in this section. First, HHS proposed to establish two additional stand-alone ECP categories at § 156.235(a)(2)(ii)(B) for PY 2024 and beyond: Mental Health Facilities and Substance Use Disorder (SUD) Treatment Centers. In doing so, two provider types currently categorized as ''Other ECP Providers'' (Community Mental Health Centers and SUD Treatment Centers) would be recategorized within these new proposed stand-alone ECP categories. We proposed to crosswalk the Community Mental Health Centers provider type into the newly created stand-alone Mental Health Facilities category and the SUD Treatment Centers provider type into the newly created stand-alone SUD Treatment Centers category. Additionally, we proposed to add Rural Emergency Hospitals (REHs) as a provider type in the Other ECP Providers ECP category (87 FR 78289). We stated in the proposed rule that this addition would reflect the fact that on or after January 1, 2023, REHs may begin participating in the Medicare program. As we noted in July 2022, ''[t]he REH designation provides an opportunity for Critical Access Hospitals (CAHs) and certain rural hospitals to avert potential closure and continue to provide essential services for the communities they serve.'' [308] We stated in the proposed rule that we believe the inclusion of REHs on the ECP List may increase access to needed care for low-income and medically underserved consumers in rural communities.

ECPs include providers that serve predominantly low-income and medically underserved individuals, and specifically include providers described in section 340B(a)(4) of the PHS Act and section 1927(c)(1)(D)(i)(IV) of the Act. Section 156.235 establishes the requirements for the inclusion of ECPs in QHP provider networks. Section 156.235(a) requires QHP issuers to include a sufficient number and geographic distribution of ECPs in their networks, where available. We explained in the proposed rule (87 FR 78289) that each plan year, we release a final list of ECPs to assist issuers with identifying providers that qualify for inclusion in a QHP issuer's plan network toward satisfaction of the ECP standard under § 156.235. We noted that the list is not exhaustive and does not include every provider that participates or is eligible to participate in the 340B Drug Pricing Program, every provider that is described under section 1927(c)(1)(D)(i)(IV) of the Act, or every provider that may otherwise qualify under § 156.235. We explained that we endeavor to continue improving the ECP list for future years and that these efforts include direct provider outreach to ECPs themselves, as well as reviewing the provider data with Federal partners.

Section 156.235(b) establishes an Alternate ECP Standard for QHP issuers that provide a majority of their covered professional services through physicians employed directly by the issuer or a single contracted medical group. We noted in the proposed rule (87 FR 78289) that the above proposal establishing two additional ECP categories and the proposed threshold requirements discussed later in this section would affect all QHP issuers, regardless of whether they are subject to the General ECP Standard under § 156.235(a) or Alternate ECP Standard under § 156.235(b). However, we stated that SADP issuers would only be subject to such requirements as applied to provider types that offer dental services, as reflected in § 156.235(a)(2)(ii)(B).

Currently, QHPs that utilize provider networks are required to contract with at least 35 percent of available ECPs in each plan's service area to participate in the plan's provider network. In addition, under § 156.235(a)(2)(ii)(B), medical QHPs must offer a contract in good faith to at least one ECP in each of the available ECP categories in each county in the plan's service area and offer a contract in good faith to all available Indian health care providers in the plan's service area. Under § 156.235(a)(2)(ii)(B), the six ECP categories currently include Federally Qualified Health Centers, Ryan White Program Providers, Family Planning Providers, Indian Health Care Providers, Inpatient Hospitals, and Other ECP Providers (currently defined to include

[308] *https://www.cms.gov/newsroom/fact-sheets/rural-emergency-hospitals-proposed-rulemaking.*

Substance Use Disorder Treatment Centers, Community Mental Health Centers, Rural Health Clinics, Black Lung Clinics, Hemophilia Treatment Centers, Sexually Transmitted Disease Clinics, and Tuberculosis Clinics).

We stated in the proposed rule (87 FR 78290) that the establishment of two new stand-alone ECP categories (Mental Health Facilities and SUD Treatment Centers) would strengthen the ECP standard in two ways: (1) by requiring that medical QHP issuers offer a contract in good faith to at least one SUD Treatment Center and at least one Mental Health Facility that qualify as ECPs in each county in the plan's service area, as opposed to being blended with other provider types in the existing ''Other ECP Provider'' category; and (2) by decreasing the number of provider types remaining in the ''Other ECP Provider'' category, thereby increasing the likelihood that remaining provider types included in the ''Other ECP Provider'' category will receive a contract offer from a medical QHP issuer to satisfy the requirement that they must offer a contract in good faith to at least one provider in each ECP category in each county in the plan's service area.

As we explained in the proposed rule (87 FR 78290), given that the ECP standard is facility-based, the inclusion of SUD Treatment Centers and Mental Health Facilities on the HHS ECP list would be limited to those facilities identified by the Substance Abuse and Mental Health Services Administration (SAMHSA) or CMS as providing such services, in addition to fulfilling other ECP qualification requirements as specified at § 156.235(c).

We stated in the proposed rule (87 FR 78290), that if this proposal is finalized as proposed, the eight available stand-alone ECP categories would consist of the following: (1) Federally Qualified Health Centers; (2) Ryan White Program Providers; (3) Family Planning Providers; (4) Indian Health Care Providers; (5) Inpatient Hospitals, (6) Mental Health Facilities; (7) SUD Treatment Centers, and (8) Other ECP Providers, to include Rural Health Clinics, Black Lung Clinics, Hemophilia Treatment Centers, Sexually Transmitted Disease Clinics, and Tuberculosis Clinics. The proposed ECP categories and ECP provider types within those categories in the FFEs for PY 2024 and beyond are set forth in Table 12 (as discussed below, we are finalizing these as proposed).

TABLE 12: ECP Categories and Provider Types in FFEs for PY 2024 and beyond

Major ECP category	ECP provider types
Federally Qualified Health Centers (FQHC)	FQHC and FQHC ''Look-Alike'' Clinics
Ryan White Program Providers	Ryan White HIV/AIDS Providers
Family Planning Providers	State-owned family planning service sites, governmental family planning service sites, including Title X Family Planning Clinics and Title X "Look-Alike" Family Planning Clinics, Not-for-profit family planning service sites that do not receive Federal funding under special programs, including under Title X of the PHS Act or other 340B-qualifiying funding
Indian Health Care Providers	Tribes, Tribal Organization and Urban Indian Organization Providers, Indian Health Service Facilities
Inpatient Hospitals	Disproportionate Share Hospital (DSH), Children's Hospitals, Rural Referral Centers, Sole Community Hospitals, Free-standing Cancer Centers, Critical Access Hospitals
Substance Use Disorder Treatment Centers	Substance Use Disorder Treatment Providers
Mental Health Facilities	Community Mental Health Centers, Other Mental Health Providers
Other ECP Providers	Black Lung Clinics, Hemophilia Treatment Centers, Rural Health Clinics, Sexually Transmitted Disease Clinics, Tuberculosis Clinics, Rural Emergency Hospitals

In addition, we proposed to revise § 156.235(a)(2)(i) to require QHPs to contract with at least a minimum percentage of available ECPs in each plan's service area within certain ECP categories, as specified by HHS. Specifically, we proposed to require QHPs to contract with at least 35 percent of available FQHCs that qualify as ECPs in the plan's service area and at least 35 percent of available Family Planning Providers that qualify as ECPs in the plan's service area. Furthermore, we proposed to revise § 156.235(a)(2)(i) to clarify that these proposed requirements would be in addition to the existing provision that QHPs must satisfy the overall 35 percent ECP threshold requirement in the plan's service area. We noted that we would retain the current overall ECP provider participation standard of 35 percent of available ECPs based on the applicable PY HHS ECP list, including approved ECP write-ins that would also count toward a QHP issuer's satisfaction of the 35 percent threshold.

We proposed that only two ECP categories, FQHCs and Family Planning Providers, be subject to the additional 35 percent threshold in PY 2024 and beyond. We stated in the proposed rule (87 FR 78291) that these two categories were selected, in part, because they represent the two largest ECP categories; together, these two categories comprise a significant majority of all facilities on the ECP List. As we explained in the

proposed rule, applying an additional 35 percent threshold to these two categories could increase consumer access in low-income areas that could benefit from the additional access to the broad range of health care services that these particular providers offer. We stated that we may consider applying a specified threshold to other ECP categories in future rulemaking, if we find that additional ECP categories contain a sufficient number and geographic distribution of providers to allow for application of the threshold without inflicting undue burden on issuers by effectively forcing them to contract with a few specific providers.

We explained that, based on data from PY 2023, it is likely that a majority of issuers would be able to meet or exceed the threshold requirements for FQHCs and Family Planning Providers without needing to contract with additional providers in these categories. To illustrate, we stated that if these requirements had been in place for PY 2023, out of 137 QHP issuers on the FFEs, 76 percent would have been able to meet or exceed the 35 percent FQHC threshold, while 61 percent would have been able to meet or exceed the 35 percent Family Planning Provider threshold without contracting with additional providers. For SADP issuers, 84 percent would have been able to meet the 35 percent threshold requirement for FQHCs offering dental services without contracting with additional providers. We further stated that in PY 2023, for medical QHPs, the mean and median percentages of contracted ECPs for the FQHC category were 74 and 83 percent, respectively. For the Family Planning Providers category, the mean and median percentages of contracted ECPs were 66 and 71 percent, respectively. For SADPs, the mean and median percentages of contracted ECPs for the FQHC category were 61 and 64 percent, respectively.

In the proposed rule (87 FR 78291), we acknowledged challenges associated with a general shortage and uneven distribution of SUD Treatment Centers and Mental Health Facilities. However, we noted that the ACA requires that a QHP's network include ECPs where available. As such, we explained that the proposal to require QHPs to offer a contract to at least one available SUD Treatment Center and one available Mental Health Facility in every county in the plan's service area does not unduly penalize issuers facing a lack of certain types of ECPs within a service area, meaning that if there are no provider types that map to a specified ECP category available within the respective county, the issuer is not penalized. Further, we explained that, as outlined in prior Letters to Issuers, HHS prepares the applicable PY HHS ECP list that potential QHPs use to identify eligible ECP facilities. The HHS ECP list reflects eligible providers (that is, the denominator) from which an issuer may select for contracting to count toward satisfying the ECP standard. We noted that, as a result, issuers are not disadvantaged if their service areas contain fewer ECPs. We explained that we anticipate that any QHP issuers falling short of the 35 percent threshold for PY 2024 and beyond could satisfy the standard by using ECP write-ins and justifications. We stated that as in previous years, if an issuer's application does not satisfy the ECP standard, the issuer would be required to include as part of its application for QHP certification a satisfactory justification.

We sought comment on these proposals.

After reviewing the public comments, we are finalizing, as proposed, for PY 2024 and subsequent PYs, the establishment of two additional stand-alone ECP categories at § 156.235(a)(2)(ii)(B), Mental Health Facilities and SUD Treatment Centers, and the addition of REHs as a provider type in the Other ECP Providers category. In addition, we are finalizing, as proposed, revisions to § 156.235(a)(2)(i) to require QHPs to contract with at least a minimum percentage of available ECPs in each plan's service area within certain ECP categories, as specified by HHS. Specifically, we are finalizing that QHPs must contract with at least 35 percent of available FQHCs that qualify as ECPs in the plan's service area and at least 35 percent of available Family Planning Providers that qualify as ECPs in the plan's service area for PY 2024 and subsequent PYs. Furthermore, we are finalizing, as proposed, revisions to § 156.235(a)(2)(i) to clarify that these threshold requirements will be in addition to the existing provision that QHPs must satisfy the overall 35 percent ECP threshold requirement in the plan's service area. As stated earlier, we noted in the proposed rule (87 FR 78289) that the proposal establishing two additional ECP categories and the proposed threshold requirements would affect all QHP issuers, regardless of whether they are subject to the General ECP Standard under § 156.235(a) or Alternate ECP Standard under § 156.235(b), but we stated that SADP issuers would only be subject to such requirements as applied to provider types that offer dental services, as reflected in § 156.235(a)(2)(ii)(B). However, we omitted corresponding regulation text amendments in the proposed rule. We are including regulation text amendments at § 156.235(b)(2)(i) to codify this policy as proposed.

We summarize and respond to public comments received on the proposed policies, below.

Comment: The majority of commenters supported the proposal to create the standalone ECP categories for SUD Treatment Centers and Mental Health Facilities, noting that the new categories will expand access to mental health services and SUD treatment. One commenter urged HHS to further define what types of facilities are included in the SUD Treatment Centers and Mental Health Facilities categories. One commenter recommended that HHS use the language ''mental health organizations'' because ''mental health organizations'' is a broader term and can include peer-run organizations and other community-based mental health centers. They indicated that these organizations receive funding and technical assistance from SAMHSA and that they would be able to service more individuals if they were ECPs. Two commenters requested that HHS establish an additional ECP category for ''pediatric mental health facility.''

Response: We are finalizing the creation of standalone ECP categories for SUD Treatment Centers and Mental Health Facilities as proposed. As noted by commenters and explained in the proposed rule (87 FR 78290), we believe that establishing these new standalone categories will expand access to mental health services and SUD treatment. Regarding the suggestion to use the broader term ''mental health organizations,'' the commenter noted that this term can include the use of peer-run organizations. CMS partners with SAMHSA to ensure that a range of providers providing mental health and SUD care appear on the HHS ECP list in order to increase access for all consumers who need these types of care. HHS may consider additional ECP categories or provider types, including pediatric mental health providers and other types of mental health organizations, in future rulemaking, if analysis suggests that there is a sufficient number and distribution of such providers.

Comment: Two commenters opposed HHS' proposal to establish these ECP categories. One of these comments urged HHS to delay implementation of the standalone categories until PY 2025 to allow issuers more time to prepare and to evaluate the impact of the proposal. One commenter did not

specifically state whether they supported or opposed the proposal but stated that regulation should be left to the States. Two commenters recognized that issuers may have difficulty meeting the requirements due to inadequate provider supply. One of these two commenters recommended delaying the implementation of the two categories until further analysis can be conducted to determine the best way to contract with quality SUD treatment and mental health providers.

Response: In response to concerns raised about potential difficulties meeting the increased standard because of a provider supply shortage, we note that the standard does not penalize issuers that lack certain types of ECPs within a service area. First, section 1311(c)(1)(C) of the ACA requires that a QHP's network include those ECPs, *where available,* that serve predominantly low income and medically-underserved populations. As such, as we explained in the proposed rule (87 FR 78291), the proposal to require QHPs to offer a contract to at least one available SUD Treatment Center and one available Mental Health Facility in every county in the plan's service area does not unduly penalize issuers facing a lack of certain types of ECPs within a service area. In addition, as outlined in prior Letters to Issuers, HHS prepares the applicable PY HHS ECP list that potential QHPs use to identify eligible ECP facilities. The HHS ECP list reflects eligible providers (that is, the denominator) from which an issuer may select for contracting to count toward satisfying the ECP standard.[309] As a result, issuers are not disadvantaged if their service areas contain fewer ECPs. Further, as in prior years, there will be mechanisms in place to assist issuers who encounter difficulty meeting any element of the ECP standard during certification, including the ECP Justification Form and the ECP Write-in Worksheet.[310] We reflect this in our regulations (§ 156.235(a)(3) and (b)(3)) by permitting issuers that cannot meet the contracting standards to satisfy the QHP certification standard by submitting a justification. Therefore, the standard does not penalize issuers that cannot meet the ECP standard because of a lack of certain types of ECPs within a service area. Moreover, we anticipate implementing these categories for PY 2024 will increase consumer access to vitally important mental health and SUD care, enhancing health equity for low-income and medically underserved consumers. Thus, we are not delaying implementation until PY 2025.

Comment: One commenter supported the proposal but expressed patient access concerns, as many mental health and SUD facilities are religious in nature, and LGBTQIA+ and racial and ethnic minority groups have frequently expressed discomfort with religiously affiliated programs. The commenter urged HHS to ensure that the ECP list also includes secular mental health and SUD facilities.

Response: We acknowledge the commenter's concern and remain committed to continuously improving the ECP list such that it includes a wide range of providers that can provide care for all consumers, recognizing that diverse patient populations may have varying needs and preferences for their care, including mental health and SUD care.

Comment: Several commenters supported the proposal to add REHs to the Other ECP Providers category, citing expanded access to care in rural areas.

Response: We agree that including REHs in the Other ECP Providers category may increase access to needed care for low-income and medically underserved consumers in rural communities, and are finalizing the addition of REHs to the Other ECP Providers category as proposed. As we noted in the proposed rule (87 FR 78289), REHs are a new provider type established to address the growing concern over closures of rural hospitals, and as such, there may initially be few REHs on the ECP list. We anticipate that the number of REHs on the ECP list will grow in future years as some current ECPs, such as critical access hospitals, may potentially convert to REHs to avoid closure.

Comment: Two commenters opposed the addition of REHs to the Other ECP Providers category. They recommended that HHS delay the proposal until PY 2025 to allow more time for issuers to prepare and because States, hospitals, providers, and other interested parties are in the process of implementing new REH standards.

Response: We are finalizing our proposal to add REHs to the ''Other ECP Providers'' category. This will increase the likelihood that issuers will include REHs in their networks, thereby increasing access to needed care for low-income and medically underserved consumers in rural communities. However, we note that issuers will often have the option to satisfy the ECP requirement by contracting with another provider type. If no REHs are available in a service area, the issuer will not be penalized.

Comment: Many commenters supported the proposal to apply the 35 percent threshold to FQHCs and Family Planning Providers, citing enhanced access to care for low-income, medically underserved consumers. One commenter stated that its support for the extension of the 35 percent requirement threshold to FQHCs was contingent on HHS' ECP justification process remaining the same.

Response: We agree that the application of the 35 percent threshold to FQHCs and Family Planning Providers will enhance access to care for low-income, medically underserved consumers, and are finalizing the 35 percent thresholds for FQHCs and Family Planning Providers as proposed. As we stated in the proposed rule, these thresholds will apply to all issuers regardless of whether they are subject to the General ECP standards under § 156.235(a) or the Alternate ECP Standards under § 156.235(b). We note that SADP issuers will only be subject to such requirements as applied to provider types that offer dental services, as reflected in § 156.235(a)(2)(ii)(B). Apart from some enhancements to the ECP Justification Form to facilitate issuers' reporting to CMS when provider facilities have closed or are no longer interested in contracting, or when issuers have encountered other contracting barriers beyond their control, the justification process remains broadly the same as in PY 2023.

Comment: Some commenters opposed the proposed categorical threshold requirements (that is, the proposed threshold requirements that would apply to specific categories of ECPs), stating that they do not account for regional variations in provider availability, enrollee needs, and geographic features. Commenters also stated that categorical thresholds may lead to inflexibility in contracting with high-quality providers and increased administrative costs. Two of the opposing commenters expressed concerns about not being given enough time to negotiate new contracts with providers. However, one commenter acknowledged that issuers that fall short of the requirement could submit ECP write-ins and justification forms.

Response: We recognize commenters' concerns given that issuer network participation negotiations are a tool that issuers use to manage costs, which are

[309] HHS also endeavors to continue improving the ECP list for future plan years, and invites issuers to encourage any mental health or SUD provider in that issuer's service area to submit an ECP petition for potential inclusion on the list.

[310] See *https://www.qhpcertification.cms.gov/s/ECP%20and%20Network%20Adequacy* and *https://www.qhpcertification.cms.gov/s/Essential%20Community%20Providers%20and%20Network%20Adequacy%20FAQs for more information.*

generally reflected in lower premium rates. Reducing issuers' ability to limit the scope of their networks could reduce the utility of that cost management tool and potentially cause premiums to increase. In considering these factors, we elected not to propose to extend the 35 percent threshold to each of the major ECP categories. Rather, we proposed that only two major ECP categories, FQHCs and Family Planning Providers, be subject to the additional 35 percent threshold in PY 2024 and beyond. These two categories were selected, in part, because they represent the two largest ECP categories; together, these two categories comprise a significant majority of all facilities on the ECP list. Applying an additional 35 percent threshold to these two categories could increase consumer access in low-income areas that could benefit from the additional access to the broad range of health care services that these particular providers offer. As we explained in the proposed rule (87 FR 78291), because there is already a robust number of these two types of facilities on the ECP list, we do not anticipate that it will be unduly burdensome for issuers to contract with 35 percent of available providers of these types in the plan's service area. We acknowledge that extending the 35 percent threshold to those ECP categories that contain fewer total providers, on the other hand, could potentially lead to decreased contracting flexibility for issuers.

If issuers encounter difficulty meeting the 35 percent thresholds for FQHCs and/or Family Planning Providers due to insufficient time, provider availability, or flexibility to carry out contracting activities, we remind issuers that the ECP Justification Form, the ECP Write-in Worksheet, and the ECP/NA Post-certification Compliance Monitoring (PCM) program are available as tools to assist issuers with their good faith efforts toward compliance with the applicable ECP standard.

Comment: Several commenters noted support for HHS' proposal to increase the contracting threshold for FQHCs from 30 to 35 percent.

Response: We did not make such a proposal in the proposed rule. We proposed, and are finalizing, the application of a 35 percent ECP threshold to both FQHCs and Family Planning Providers (in addition to the existing overall 35 percent ECP threshold requirement in the plan's service area). In prior years, the threshold percentage applied overall across categories and did not apply specifically to any individual ECP category.

9. Termination of Coverage or Enrollment for Qualified Individuals (§ 156.270)

a. Establishing a Timeliness Standard for Notices of Payment Delinquency

In the HHS Notice of Benefit and Payment Parameters for 2024 proposed rule (87 FR 78206, 78291), we proposed to amend § 156.270(f) by adding a timeliness standard to the requirement for QHP issuers in Exchanges to send enrollees notice of payment delinquency. Specifically, we proposed to revise § 156.270(f) to require issuers to send notice of payment delinquency promptly and without undue delay.

We stated in the proposed rule that HHS has long required issuers to send notices of non-payment of premium (77 FR 18469), so that enrollees who become delinquent on premium payments are aware and have a chance to avoid termination of coverage. In accordance with § 156.270(a), issuers may terminate coverage for the reasons specified in § 155.430(b), which under paragraph (2)(ii) includes termination of coverage due to non-payment of premiums. Enrollees who are receiving APTC and who fail to timely pay their premiums are entitled to a 3-month grace period, described at § 156.270(d), during which they may return to good standing by paying all outstanding premium before the end of the 3 months. We noted in the proposed rule (87 FR 78291) that enrollees who are not receiving APTC may also be entitled to a grace period under State law, if applicable.

As we explained in the proposed rule (87 FR 78291), we have an interest in helping enrollees maintain coverage by establishing basic standards of communication between the QHP issuer and enrollees regarding premium payment status, especially at the start of an enrollment and when an enrollment has entered delinquency for failure to timely pay premium and is at risk for termination. For example, we stated that before Exchange coverage is effectuated, the Exchanges on the Federal platform generally require that the enrollee make a binder payment (first month's premium) by prescribed due dates.[311] At § 156.270(f), we have also regulated on communicating to an enrollee when they have become delinquent on premium payment and when their coverage has been terminated. But we noted that while the regulation at § 156.270(f) requires that issuers notify enrollees when they become delinquent on premium payments, we currently set no timeliness requirements for issuers. We stated that, in conducting oversight of issuers, we are aware that in some instances, issuers have delayed notifying enrollees of delinquency, and are concerned that there may be situations in which enrollees are not timely informed that they have become delinquent on premium payments, thus limiting the amount of time they have available to rectify the delinquency and avoid termination of coverage. We noted that in extreme cases, an enrollee may not become aware that they have become delinquent until termination of coverage has already occurred. For example, we noted that if an enrollee (who was not receiving APTC) failed to pay August's premium but was not informed by the issuer they had become delinquent until September, they would have already lost coverage and will not have an opportunity to restore it. We acknowledged that there may also be uncertainty among issuers regarding their requirement to send notices of delinquency, since we have not provided guidance on when this notice must be sent.

As we explained in the proposed rule (87 FR 78292), modifying § 156.270(f) to require issuers operating in Exchanges to send notices of payment delinquency promptly and without undue delay would ensure that issuers are promptly sending these notices when enrollees fail to make premium payments, so that enrollees are aware they are at risk of losing coverage, including when they are entering a grace period (either the 3-month grace period for enrollees who are receiving APTC, or a State grace period if applicable). We noted that it would also provide clarity to issuers regarding their obligation to send a notice when an enrollee becomes delinquent on premium payment. Finally, we stated that updating this regulation would serve HHS' goal of promoting continuity of coverage by ensuring enrollees are aware they have become delinquent on premium payment and have a chance to pay their outstanding premium to avoid losing coverage. We sought comments on this proposal.

In addition, to further help ensure that notices are sent in a timely and uniform manner, we stated that we believe it would be important to specify the number of days within which the issuer must send notice from the time an enrollee becomes delinquent on payment. Thus, we also solicited comment on what a reasonable timeframe would be for sending notices of delinquency to enrollees.

After reviewing the public comments, we are finalizing our proposal to revise § 156.270(f) to require QHP issuers in

[311] See § 155.400(e).

Exchanges on the Federal platform to send notices of payment delinquency promptly and without undue delay. We are also finalizing that such notices must be sent within 10 business days of the date the issuer should have discovered the delinquency. In addition, we clarify that this timeliness requirement only applies to QHP issuers operating in Exchanges on the Federal platform. We summarize and respond below to public comments received on the proposal to require issuers to send notice of payment delinquency promptly and without undue delay, and on the comment solicitation regarding a reasonable timeframe for sending notices of delinquency to enrollees.

Comment: Most commenters who addressed the proposal to add a timeliness standard for sending notices supported it, stating that the proposal would help better ensure continuity of coverage and access to health care services for enrollees. One commenter stated that the proposal would help ensure issuers do not arbitrarily terminate coverage without providing the enrollee a chance to make a payment that may be needed to maintain their coverage.

Response: We agree with commenters that adding the timeliness standard will help ensure continuity of coverage and access to health care services, as well as help ensure issuers do not arbitrarily terminate coverage without providing the enrollee a chance to make a payment that may be needed to maintain their coverage. As discussed further below, we are finalizing the timeliness standard with modification.

Comment: One commenter opposed the proposal, stating that such rules are already included and enforced at the State level. In addition, one commenter who supported the proposal suggested that HHS could deem issuers compliant with the policy in States that have existing time frames for sending notices to enrollees with premiums in arrears.

Response: While we acknowledge some States have their own rules, as we noted in the proposed rule (87 FR 78291), HHS has observed instances in which issuers significantly delayed sending delinquency notices, limiting enrollees' ability to pay past due premium prior to termination of coverage. It is thus important to establish a minimum standard for when issuers must send notices of payment delinquency so that enrollees consistently receive such notices in a timely manner. Under this approach, in States that do not have requirements or that have less stringent requirements, issuers of QHPs in Exchanges on the Federal platform would at least be required to meet this new Federal standard, though States may establish a timeliness standard that is more protective. However, we clarify that this timeliness requirement does not apply to SBEs. Unlike the Exchanges on the Federal platform, some SBEs collect and aggregate premium on behalf of issuers, or send delinquency notices to consumers, and thus it is appropriate to avoid extending this requirement to issuers in SBEs.

Comment: Two commenters supported adding a timeliness standard to the requirement for QHP issuers to send enrollees notice of payment delinquency but did not recommend including a specific timeframe for this requirement. These commenters encouraged CMS to allow issuers to maintain their best practices for sending delinquency payment notices, and cautioned that issuers need sufficient time to process enrollee payments received in the few days before and after a payment due date to ensure consumers do not unnecessarily receive a notice of payment delinquency.

Response: We acknowledge that issuers have historically had a variety of practices for sending delinquency notices, and that they need sufficient time to process enrollee payments to ensure consumers do not unnecessarily receive a notice of payment delinquency. However, we also believe it is important that enrollees are given adequate time to make payments before any applicable grace period expires. To balance providing issuers sufficient time to process payments around the payment due date and ensuring that enrollees timely receive notice of payment delinquency, we are finalizing a standard that requires issuers to send delinquency notices within 10 business days of the date the issuer should have discovered the delinquency.

Comment: One commenter recommended that taglines (including large print taglines) be added to delinquency notices to address the needs of consumers with LEP and/or sight issues.

Response: Although this comment is not within the scope of our proposals on the timeliness standard presented in the proposed rule, we appreciate that consumers with disabilities may have a need for reasonable accommodations with regard to the notices they receive. Issuers are required to provide such accommodations under State and Federal law. Regulation on meaningful access to qualified health plan information can be found at § 156.250, and on accessibility requirements at § 155.205(c). Enrollees who need a particular accommodation should reach out to their issuer to make the request.

Comment: Twenty commenters suggested time frames for sending notices of delinquency to enrollees. One commenter recommended the earliest timeframe that is reasonably possible and most protective of enrollees. Nine commenters recommended insurers send notice of payment immediately after the deadline. Two commenters recommended that issuers send delinquency notices to enrollees within 5 business days following the due date of the unpaid premium. One commenter recommended one week, and another commenter recommended 7 calendar days, both following the due date of the premium. Two commenters recommended 10 business days after the discovery of the delinquency, with one commenter adding that this would provide flexibility for situations in which an issuer is not initially aware that an enrollee has become delinquent on premium payments. This commenter also noted that there were cases in which issuers did not receive notice of insufficient funds until 20 days after payment was due.

One commenter recommended 12 days, with no specification of when that time period would begin, or whether they meant business or calendar days. One commenter recommended a minimum of 12 business days or 15 calendar days, with no specification of when that time period would begin. One commenter recommended that an issuer send an initial delinquency notice within two calendar weeks of the initial delinquency. One recommended that 30 days from the original payment due date would be a sufficient timeline for sending such notices, but did not specify whether they meant business or calendar days.

Response: We agree with the two commenters who suggested that 10 business days would be a reasonable timeframe for sending notices of payment delinquency. However, in order to ensure that issuers are promptly sending notices, we are finalizing a time frame of 10 business days from when the issuer ''should have'' discovered the delinquency. This means that there is an expectation that issuers will promptly send notices of delinquency once they discover the delinquency. We believe that requiring notice to be sent within 10 business days of the date an issuer should have discovered the enrollee's delinquency appropriately balances the need to ensure enrollees receive timely notice of delinquency, while providing issuers with adequate time to send the notices. Adopting a standard of 10 business days also allows time for

issuers to ensure information regarding enrollee delinquency is accurate and to communicate with enrollees. In addition, as some commenters noted, there are situations in which an issuer is not initially aware that an enrollee has entered delinquency. For example, one commenter noted that there were cases in which issuers did not receive notice of insufficient funds until 20 days after payment was due. Thus, the standard we are finalizing in this rule requires issuers to send notice to enrollees within 10 business days of the date the issuer should have discovered the delinquency so that issuers are not required to send the notices until they should have become aware that an enrollee is delinquent on payment.

Other timeframes suggested by commenters, such as 30 days after the payment due date or immediately after the deadline for payment, are either too long to ensure that enrollees are timely notified of delinquency and have an opportunity to rectify it, or too short to give issuers time to process an enrollee's delinquency and send a notice. We believe that defining ''promptly without undue delay,'' as 10 business days of the date the issuer should have discovered the delinquency provides issuers with the flexibility to process premium payments that arrive late, and enough time for enrollees to make late payments before the expiration of a grace period.

Comment: One commenter recommended that HHS institute a minimum requirement that issuers include notice of delinquency on their monthly invoices as soon as the first missed payment and allow issuers to continue to send additional notices using additional methods.

Response: Issuers have flexibility to implement additional notices, and nothing prevents issuers from sending additional notices if they would like to do so.

10. Final Deadline for Reporting Enrollment and Payment Inaccuracies Discovered After the Initial 90-Day Reporting Window (§ 156.1210(c))

In the HHS Notice of Benefit and Payment Parameters for 2024 proposed rule (87 FR 78206, 78292), we proposed to amend § 156.1210(c) to remove, beginning with adjustments to APTC and user fee payments and collections for 2015 PY coverage, the alternate deadline at § 156.1210(c)(2) that allows an issuer to describe all data inaccuracies identified in a payment and collection report by the date HHS notifies issuers that the HHS audit process for the PY to which such inaccuracy relates has been completed, for these data inaccuracies to be eligible for resolution.

In the proposed rule (87 FR 78292), we proposed to revise § 156.1210(c) to provide that to be eligible for resolution under § 156.1210(b), an issuer must describe all inaccuracies identified in a payment and collections report before the end of the 3-year period beginning at the end of the PY to which the inaccuracy relates. As we stated in the proposed rule, under this proposal, beginning with the 2020 PY coverage, HHS would not pay additional APTC payments or reimburse user fee payments for FFE, SBE–FP, and SBE issuers for data inaccuracies reported after the 3-year deadline. Additionally, we proposed that HHS would not accept or take action that results in an outgoing payment on data inaccuracies or payment errors for the 2015 through 2019 PY coverage that are reported after December 31, 2023, which means an issuer must describe all inaccuracies identified in a payment and collections report for PYs 2015 through 2019 before January 1, 2024. We stated that this proposal would allow issuers some additional time after this rule is finalized to submit any inaccuracies for the 2015 through 2019 PY coverage, for which submissions would no longer be permitted upon the effective date of this rule if this proposal were effective upon finalization.

We did not propose any changes to the general framework outlined in § 156.1210(c)(3), which currently states that if a payment error is discovered after the final deadline set forth in § 156.1210(c)(1) and (2), the issuer must notify HHS, the State Exchange, or SBE–FP (as applicable) and repay any overpayments to HHS. We proposed to retain this language as the last sentence of new proposed § 156.1210(c), except for the reference to the alternative deadline at § 156.1210(c)(2).

For issuers in State Exchanges, we further affirmed that this proposal would not change the requirement that issuers promptly identify and report data inaccuracies to the State Exchange.[312] We stated that under the proposed revisions, issuers in State Exchanges would be subject to the same final 3-year deadline to work with the State Exchange to resolve any enrollment or payment inaccuracies identified after the initial 90-day reporting window for discovered underpayments. Similarly, we also proposed that HHS would not make any payments to issuers in State Exchanges on data inaccuracies or payment errors for 2015 through 2019 PY coverage that are reported after December 31, 2023. In addition, we explained that issuers in State Exchanges would also remain subject to the existing requirement to report data inaccuracies identified at any time when related to overpayments.

We refer readers to the proposed rule for further discussion of these proposals (87 FR 78292 through 78293). We sought comment on these proposals.

After reviewing the public comments, we are finalizing our proposals without modification. Specifically, we are finalizing as proposed, removing the alternate deadline at § 156.1210(c)(2) beginning with the 2015 PY coverage,[313] so that issuers are required to describe all inaccuracies identified in a payment and collections report within 3 years of the end of the applicable PY to which the inaccuracy relates to be eligible to receive an adjustment to correct an underpayment.[314] Additionally, as proposed, we are finalizing at § 156.1210(c) that, for PYs 2015 through 2019, to be eligible for resolution under paragraph (b) of this section, an issuer must describe all inaccuracies identified in a payment and collections report before January 1, 2024, thus allowing issuers additional time to submit any inaccuracies for the 2015 through 2019 PY coverage. We summarize and respond below to public comments received on the proposed provisions.

Comment: A few commenters supported the proposal to remove the alternate deadline at § 156.1210(c)(2) to resolve data inaccuracies and report payment adjustments to HHS. Removal of the alternate deadline requires issuers to describe all inaccuracies in a payment and collections report within three years of the end of the applicable PY to which the inaccuracy relates. One of these commenters was concerned about permitting waiver of any user fees owed to an SBE–FP if inaccuracies are discovered after the deadline and indicated that some State-imposed user fees are determined by State law and HHS does not have the authority to waive them.

Response: We are finalizing these changes as proposed and clarify that

[312] As previously noted, the requirements captured in § 156.1210 apply to all issuers who receive APTC, including issuers in State Exchanges. Also see part 2 of the 2022 Payment Notice, 86 FR 24258.

[313] The 2014 PY is excluded because the alternate deadline for reporting inaccuracies closed upon completion of the 2014 audits. See CMS. (2019, April 1). CMS Issuer Audits of Advanced Payments of the Premium Tax Credit. *https://www.cms.gov/CCIIO/Resources/Forms-Reports-and-Other-Resources/Downloads/2014-CMS-APTC-Audits.PDF.*

[314] Underpayment in this section refers to both APTC underpayments to the issuer and user fee overpayments to HHS, for which an issuer would be entitled to additional payment from HHS.

this policy is not intended to waive the collection of user fees owed to SBE–FPs. Only payments to issuers to address underpayments that are identified several years after the applicable plan year are constrained under these changes—not incoming user fee or APTC overpayments owed by the issuer to either HHS or a State. As explained in the proposed rule and in part 2 of the 2022 Payment Notice (86 FR 24257), under section 1313(a)(6) of the ACA, ''payments made by, through, or in connection with an Exchange are subject to the False Claims Act (31 U.S.C. 3729, *et seq.*) if those payments include any Federal funds.'' As such, if any issuer has an obligation to pay back APTC or pay additional user fees, the issuer could be liable under the False Claims Act for knowingly and improperly avoiding the obligation to pay. Section 156.1210(c) states that if a payment error is discovered after the reporting deadline, the issuer is obligated to notify HHS and the State Exchange (as applicable) and repay any overpayment.

Comment: One commenter stated that removing the alternate deadline at § 156.1210(c)(2) puts issuers in a position in which they will be expected to return overpayment of APTCs but will not be reimbursed for underpayments when identified through an audit process, asserting that this is unnecessarily punitive to issuers. That commenter stated that audits are time-consuming, resource-heavy obligations to ensure accurate payments are made and paying issuers what they owed is a reasonable expectation.

Response: We believe the benefits of requiring inaccuracies identified in a payment and collections report to be described within 3 years of the end of the applicable plan year to which the inaccuracy relates outweigh any perceived inequities associated with establishing a deadline for receiving an adjustment to correct discovered underpayments but not for payment of amounts owed to the Federal government. First, prompt identification and correction of payment and enrollment errors protects enrollees from unanticipated tax liability that could result if the APTC is greater than the amount authorized by the Exchange. In addition, finalizing these changes ensures that HHS and Exchange processes for handling payment and enrollment disputes for discovered underpayments are completed before the existing IRS limitation on amending a Federal income tax return. Second, prompt reporting supports the efficient operation of Exchanges by aligning the Exchange's enrollment and eligibility data, payments provided by and collected by HHS for Exchange coverage, and the issuer's own records of payments due. The 3-year window is intended to result in accurate reporting and timely resolution of data inaccuracies, and will establish a more consistent, predictable, and less operationally burdensome process for the identification and resolution of such inaccuracies for enrollees, issuers, HHS, and State Exchanges. Further, we believe that requiring issuers to adhere to the 3-year deadline to submit all disputes and address all errors will incentivize proactive reporting of inaccuracies that will increase data integrity, and will discourage a reactive approach of utilizing the audit process to identify inaccuracies and utilizing the end of the audit process as an alternative timeframe to receive additional APTC or reimbursement of user fee payments. For all of these reasons, we therefore generally disagree that this approach is unnecessarily punitive.

This policy requires that issuers describe all inaccuracies identified in a payment and collections report within three years of the end of the applicable PY to which the inaccuracy relates to be eligible to receive an adjustment to correct an underpayment. We will continue to take action that results in an outgoing payment on data inaccuracies or payment errors identified through an audit process when those errors are identified within the 3 years of the end of the applicable PY to which the inaccuracy relates. However, under this new framework, we will not accept or take action that results in an outgoing payment on data inaccuracies or payment errors for the 2015 through 2019 PY coverage that are not reported before January 1, 2024.

To assist in the transitioning to this new framework, we are affording issuers additional time to report data inaccuracies or payment errors for the 2015 through 2019 PY coverage for discovered underpayments, providing at § 156.1210(c) that all such inaccuracies must be reported before January 1, 2024. This one-time window is intended to afford issuers time to address concerns with their submissions and any discovered underpayments for these PYs before full implementation of this policy change. We will make outgoing payments for additional APTC or reimbursement of user fee overpayments associated with reported errors during this one-time window, which we believe affords ample opportunity for issuers to report any data inaccuracies or payment errors related to discovered underpayments for 2015 through 2019 PY coverage.

Finally, we note that it is the False Claims Act (31 U.S.C. 3729, *et seq.*) [315] *that obligates* issuers to notify HHS and repay improper ''payments made by, through, or in connection with an Exchange . . . if those payments include any Federal funds,'' and prohibits an issuer from knowingly and improperly avoiding the obligation to pay. If any issuer has an obligation to pay back APTC or pay additional user fees, the issuer could be liable under the False Claims Act for knowingly and improperly avoiding the obligation to pay. The requirement at § 156.1210(c) that the issuer notify HHS and the State Exchange (as applicable) and repay any overpayment (regardless of when the payment error is discovered), aligns with obligations under the False Claims Act. Further, we reiterate that safeguarding Federal funds is a primary reason for APTC and user fee audits (78 FR 65087 through 65088),[316] even if a historic, ancillary benefit under the prior framework had been providing issuers a mechanism to receive additional outgoing payments after the 3-year reporting deadline in situations involving late discovery and identification of underpayments. After consideration of comments, we are finalizing the amendments to § 156.1210(c) as proposed.

11. Administrative Appeals (§ 156.1220)

As discussed in section III.A.7.d. of this preamble, (HHS–RADV Discrepancy and Administrative Appeals Process), we are finalizing the amendments to § 156.1220(a)(4)(ii) to add a reference to new proposed § 153.630(d)(3) to align with the changes to shorten the SVA attestation and discrepancy reporting period. As discussed in section III.A.7.d of this preamble, under new § 153.630(d)(3), we are retaining the 30-calendar-day window to confirm, or file a discrepancy, regarding the calculation of the risk score error rate as a result of HHS–RADV. The cross-reference to § 153.630(d)(2) in § 156.1220(a)(4)(ii)

[315] ACA section 1313(a)(6) explicitly subjects payments made by, through, or in connection with an Exchange to the False Claims Act, if the payments include any Federal funds.

[316] The 2014 Payment Notice that included financial oversight, maintenance of records and reporting requirements, ''safeguard[s] the use of Federal funds provided as cost-sharing reductions and advance payments of the premium tax credit and provide[s] value for taxpayers' dollars.'' See 78 FR 65088; *see also* CMS. The Center for Consumer Information & Insurance Oversight: Audit Reports. *https://www.cms.gov/CCIIO/Programs-and-Initiatives/Health-Insurance-Market-Reforms/AuditReports* (''The goals of [APTC] audits are to: Safeguard Federal Funds'').

will be maintained and will capture the new proposed 15-calendar-day window to confirm, or file a discrepancy, for SVA findings (if applicable).

In addition, in the HHS Notice of Benefit and Payment Parameters for 2024 proposed rule (87 FR 78206, 78293), we proposed to amend § 156.1220(b)(1) to address situations when the last day of the period to request an informal hearing does not fall on a business day by extending the deadline to request an informal hearing to the next applicable business day. We solicited comment on this proposed amendment.

After reviewing the public comments, we are finalizing the amendment to § 156.1220(b)(1), as proposed, to extend the deadline to request an informal hearing to the next applicable business day in situations when the last day of the period to request an informal hearing does not fall on a business day. We summarize and respond below to the public comment received on the proposed amendment to § 156.1220(b)(1).

Comment: One commenter supported the proposal to clarify that when the last day to request an informal hearing does not fall on a business day, the deadline is the next business day.

Response: We are finalizing the amendment to § 156.1220(b)(1), as proposed, extending the deadline to request an informal hearing to the next applicable business day when the last day to request an informal hearing does not fall on a business day. As we noted in the proposed rule (87 FR 78293), this provision is consistent with our policy for other risk adjustment deadlines that do not fall on a business day.[317]

For a discussion of the comments related to the shortening of the SVA window to confirm, or file a discrepancy for SVA findings to 15 days, see the preamble discussion in section III.A.7.d. of this rule (HHS–RADV Discrepancy and Administrative Appeals Process).

IV. Collection of Information Requirements

Under the Paperwork Reduction Act of 1995, we are required to provide notice in the **Federal Register** and solicit public comment before a collection of information requirement is submitted to the Office of Management and Budget (OMB) for review and approval. In order to fairly evaluate whether an information collection should be approved by OMB, section 3506(c)(2)(A) of the Paperwork Reduction Act of 1995 requires that we solicit comment on the following issues:

- The need for the information collection and its usefulness in carrying out the proper functions of the agency.
- The accuracy of our estimate of the information collection burden.
- The quality, utility, and clarity of the information to be collected.
- Recommendations to minimize the information collection burden on the affected public, including automated collection techniques.

We solicited public comment on each of these issues for the following sections of this document that contain information collection requirements (ICRs). The public comments and our responses appear in the applicable ICR sections that follow.

A. Wage Estimates

To derive wage estimates, we generally use data from the Bureau of Labor Statistics to derive average labor costs (including a 100 percent increase for the cost of fringe benefits and overhead) for estimating the burden associated with the ICRs.[318] Table 13 in this final rule presents the mean hourly wage, the cost of fringe benefits and overhead, and the adjusted hourly wage.

As indicated, employee hourly wage estimates have been adjusted by a factor of 100 percent. This is necessarily a rough adjustment, both because fringe benefits and overhead costs vary significantly across employers, and because methods of estimating these costs vary widely across studies. Nonetheless, there is no practical alternative, and we believe that doubling the hourly wage to estimate total cost is a reasonably accurate estimation method.

TABLE 13: Adjusted Hourly Wages Used in Burden Estimates

Occupation Title	Occupational Code	Mean Hourly Wage ($/hr.)	Fringe Benefits and Overhead ($/hr.)	Adjusted Hourly Wage ($/hr.)
Business Operations Specialist	13-1199	$38.10	$38.10	$76.20
General and Operations Manager	11-1021	$55.41	$55.41	$110.82
Management Analyst	13-1111	$48.33	$48.33	$96.66
Insurance Sales Agent	41-3021	$33.34	$33.34	$66.68
Computer and Information Systems Manager	11-3021	$78.33	$78.33	$156.66
Secretaries and Administrative Assistants, Except Legal, Medical, and Executive	43-6014	$19.75	$19.75	$39.50

B. ICRs Regarding Repeal of Risk Adjustment State Flexibility To Request a Reduction in Risk Adjustment State Transfers (§ 153.320(d))

We are finalizing the repeal of the ability for prior participant States to request a reduction in risk adjustment State transfers in all State market risk pools beginning with the 2025 benefit year. As such, we are finalizing several amendments to § 153.320(d).

The burden currently associated with this option is the time and effort for the State regulator to submit its request(s), supporting evidence, and analysis to HHS. Burden for this option is currently approved under OMB control number: 0938–1155. In that Paperwork Reduction Act (PRA) package, we estimate that it will take a business operations specialist 40 hours (at a rate of $76.20 per hour) to prepare the request, supporting evidence, and analysis, and 20 hours for a senior

[317] See, for example, § 153.730.

[318] See May 2021 Bureau of Labor Statistics, Occupational Employment Statistics, National Occupational Employment and Wage Estimates. Available at *https://www.bls.gov/oes/current/oes_stru.htm.*

operations manager (at a rate of $110.82 per hour) to review the request, supporting evidence, and analysis and transmit it electronically to HHS. In that PRA package, we further estimate that each State seeking a reduction will incur a total burden of 60 hours at a cost of approximately $5,264.40 per State to comply with this reporting.

Since this policy will eliminate the ability of the one prior participating State (Alabama) to request a reduction in risk adjustment transfers beginning with benefit year 2025, we proposed to rescind this information collection and the associated burden beginning with the 2025 benefit year in the proposed rule. Therefore, there will be a reduction in burden on States seeking reductions of 60 hours at a cost of approximately $5,264.40 per State due to the repeal of this policy.

We sought comment on the information collection requirements related to this policy and the proposed rescission of this information collection beginning with the 2025 benefit year. We did not receive any comments. Therefore, we are finalizing this information collection as proposed, and HHS will rescind the associated information collection once the policy is no longer in effect.

C. ICRs Regarding Risk Adjustment Issuer Data Submission Requirements (§§ 153.610, 153.700, and 153.710)

We are finalizing a requirement for issuers to collect and make available for HHS' extraction from issuers' EDGE servers a new data element, a QSEHRA indicator. To implement this policy, we are adopting the same transitional approach and schedule for the QSEHRA indicator as was finalized for the ICHRA indicator in the 2023 Payment Notice. Under this approach, for the 2023 and 2024 benefit years, issuers will be required to populate the QSEHRA indicator using data they already collect or have accessible regarding their enrollees. Then, beginning with the 2025 benefit year, issuers that do not have an existing source to populate this field for particular enrollees will be required to make a good faith effort to collect and submit the QSEHRA indicator for these enrollees. We are also finalizing the proposed extraction of this data element beginning with the 2023 benefit year and are also finalizing the inclusion of the QSEHRA indicator in the enrollee-level EDGE limited data sets available to qualified researchers upon request, once available.

We will begin collection of the QSEHRA indicator with the 2023 benefit year, and we estimate that approximately 650 issuers of risk adjustment covered plans will be subject to this data collection. We will collect a QSEHRA indicator from issuers' ESES files and risk adjustment recalibration enrollment files. We believe the burden associated with the collection of this data will be similar to that of the collection of ICHRA indicator finalized in the 2023 Payment Notice. Much like the ICHRA indicator data, we believe that some issuers already collect or have access to the relevant information to populate the QSEHRA indicator. However, we do not believe the information to populate the QSEHRA indicator is routinely collected by all issuers at this time; therefore, we anticipate that there may be administrative burden for some issuers in developing processes for collection, validation, and submission of this new data element.

In recognition of the burden associated with collecting this new data element for issuers, we are adopting a transitional approach for the QSEHRA indicator that mirrors the approach finalized for the ICHRA indicator in the 2023 Payment Notice and is similar to how we have handled other new data collection requirements.[319] For successful EDGE server data submission, each issuer will need to update their file creation process to include the new data element, which will require a one-time administrative cost. After incorporating the most recently updated wage estimate data, we estimate this one-time administrative cost at $579.96 per issuer (reflecting 6 hours of work by a management analyst at an average hourly rate of $96.66 per hour). Based on this, we estimate the cumulative one-time cost to update issuers' file creation process to be $376,974 for 650 issuers (3,900 total hours for all issuers). We also estimate a cost of $96.66 in total annual labor costs for each issuer, which reflects 1 hour of work by a management analyst per issuer at an average hourly rate of $96.66 per hour.

Based on these estimates, we estimate $62,829 in total annual labor costs for 650 issuers (650 total hours per year for all issuers). We believe that this data collection should not pose significant additional operational burden to issuers given that the operational burden associated with populating the QSEHRA indicator should be aided by the requirement finalized in the 2023 Payment Notice mandating the collection of the ICHRA indicator in the same fashion. The extraction of the new QSEHRA indicator should also not pose additional burden to issuers since the creation and storage of the extract—which issuers do not receive—are mainly handled by HHS. As this policy is being finalized in this rule, we will revise the information collection request to account for the burden associated with this policy, and will provide the applicable comment periods.[320]

We are also finalizing the amendment to the applicability date for the extraction of the plan ID and rating area data elements to extend the extraction of these two data elements to the 2017, 2018, 2019 and 2020 benefit year data sets. As detailed earlier and in prior rulemakings, issuers have been required to collect and submit these two data elements as part of the required risk adjustment data since the 2014 benefit year. Therefore, we estimate that the extraction of these data elements will not pose additional operational burden to the majority of issuers, since the creation and storage of the extract—which issuers do not receive—is mainly handled by HHS. However, some issuers may not have benefit year 2017, 2018, 2019, or 2020 data readily available for extraction from their EDGE servers, and therefore, there may be some burden associated with restoring past years' data to their respective EDGE servers should this be the case. Our intention with this policy is to limit the burden on issuers for us to collect and extract the plan ID and rating area data elements from these additional prior benefit year data. Therefore, while we broadly solicited comment on these data collections, we specifically solicited comments on this burden estimate and ways that we can further limit the burden on extracting these two data elements from the 2017, 2018, 2019 and 2020 benefit year data sets.

We did not receive any comments in response to the information collection requirements related to these policies. We are finalizing these requirements as proposed.

D. ICRs Regarding Risk Adjustment Data Validation Requirements When HHS Operates Risk Adjustment (HHS–RADV) (§ 153.630)

Under § 153.630(g)(2), issuers below a materiality threshold, as defined by HHS, are exempt from the annual HHS–

[319] For example, HHS did not penalize issuers for temporarily submitting a default value for the in/out-of-network indictor for the 2018 benefit year to give issuers time to make the necessary changes to their operations and systems to comply with the new data collection requirement, but required issuers to provide full and accurate information for the in/out-of-network indicator beginning with the 2019 benefit year.

[320] Standards Related to Reinsurance, Risk Corridors, and Risk Adjustment (OMB control number 0938–1155).

RADV audit requirements in § 153.630(b). While these issuers are exempt from the annual HHS–RADV audit process, they are subject to random and targeted sampling such that they undergo HHS–RADV approximately every 3 years (barring any risk-based triggers based on experience that would warrant more frequent audits). We are finalizing, beginning with 2022 benefit year HHS–RADV, a change to the materiality threshold from $15 million in total annual premiums Statewide in the benefit year being audited to 30,000 BMM Statewide in the benefit year being audited.

We estimate that this policy will not significantly impact issuer burden relative to previous estimates for HHS–RADV and the current materiality threshold. In particular, the new threshold will not significantly alter the anticipated number of issuers that will fall under the materiality threshold and be subject to random and targeted sampling rather than the annual audit requirements. We estimate that each year, on average, there are 197 issuers of risk adjustment covered plans with total annual Statewide premiums below $15 million and 201 issuers of risk adjustment covered plans below 30,000 BMM Statewide. Assuming one-third of issuers below the materiality threshold will be subject to HHS–RADV each year, we estimate that the total number of issuers selected for HHS–RADV that fall under the materiality threshold will remain fairly constant. We believe that the number of issuers participating in HHS–RADV for any given benefit year under the finalized 30,000 BMM Statewide threshold will not be significantly different than the number of issuers participating under the current $15 million total annual premium Statewide threshold and reflected in our current HHS–RADV burden estimates, and therefore, we believe that there will not be an overall increase or decrease in burden. We will revise the information collection currently approved under OMB control number: 0938–1155 to account for the changes to the HHS definition for the materiality threshold in § 153.630(g)(2).

We did not receive any comments in response to the information collection requirements related to this policy. We are finalizing these requirements as proposed.

E. ICRs Regarding Navigator, Non-Navigator Assistance Personnel, and Certified Application Counselor Program Standards (§§ 155.210 and 155.225)

We are finalizing amendments to §§ 155.210 and 155.225 to permit enrollment assistance on initial door-to-door outreach by Navigators, non-Navigator assistance personnel, or certified application counselors. This policy will not impose any new information collection requirements, that is, reporting, recordkeeping or third-party disclosure requirements. Though we require Navigator grantees to track enrollment numbers on weekly, monthly, and quarterly progress reports, burden is already accounted for under OMB control number: 0938–1205, and grantees are not required to specifically track enrollments completed for door-to-door enrollments.

We did not receive any comments in response to the information collection requirements related to this policy. We are finalizing these requirements as proposed.

F. ICRs Regarding Providing Correct Information to the FFEs (§ 155.220(j))

We are finalizing amendments to § 155.220(j)(2)(ii) to require agents, brokers, and web-brokers to document that eligibility application information has been reviewed by and confirmed to be accurate by the consumer or their authorized representative prior to application submission. This policy will require the consumer or their authorized representative to take an action that produces a record that they reviewed and confirmed the information on the eligibility application to be accurate prior to application submission. This documentation will be required to be maintained by agents, brokers, and web-brokers for a minimum of 10 years and produced upon request in response to monitoring, audit, and enforcement activities.

We estimate costs will be associated with this policy, including those related to documenting, maintaining, and producing the documentation. This policy will not mandate any method or prescribe a template for documenting that a consumer or their authorized representative reviewed and confirmed the accuracy of their eligibility application information. It will be up to the agents, brokers, and web-brokers to determine the best way to meet these regulatory requirements.

Costs related to requiring the agent, broker, or web-broker to document that eligibility application information has been reviewed by and confirmed to be accurate by the consumer or their authorized representative prior to application submission and to maintain that documentation for a period of 10 years are as follows. We estimate it will take an additional 5 minutes for an enrolling agent, broker, or web-broker to obtain documentation from a consumer or their authorized representative that they have reviewed and confirmed the accuracy of their application information. Billing at $66.68 per hour using the Insurance Sales Agent occupation code, each enrollment will have approximately $5.56 additional cost associated with it based on extra time commitment. In PY 2022, agents submitted 4,947,909 policies. This makes the yearly total cost associated with the extra 412,326 hours of burden approximately $27,493,898 (412,326 total hours × $66.68 per hour).

Costs associated with maintaining consumer's or their authorized representative's documentation will depend on the method selected by the agent, broker, or web-broker to meet the regulatory requirements. For those agents, brokers, or web-brokers currently meeting the requirements, no additional costs will be incurred. If an agent, broker, or web-broker opts to use paper for documentation, they will bear the costs of paper, ink and filing cabinets to store the paperwork.

HHS will only require an agent, broker, or web-broker to produce retained records in limited circumstances related to monitoring, audit, and enforcement activities. In instances of fraud investigation, we typically request documentation associated with approximately 10 different applications, generally from the past 2 to 3 years. We estimate it will take an agent approximately 2 hours to gather consumer documentation for 10 applications. Each year, we generally investigate approximately 120 agents, brokers, or web-brokers. Therefore, we estimate the yearly cost of producing documentation for HHS to be approximately $16,002 (($66.68 hourly rate × 2 hours) × 120). The documentation will be able to be mailed electronically, so there will be no cost associated with printing or mailing the documentation. Agency-wide audits are not completed often by HHS but may become more widespread. In those instances, we will request that the agency produce a certain number of records from the past 10 years. As this policy is being finalized in this rule, we will request to account for the associated information collection burden under OMB control number: 0938–NEW—(CMS–10840—Agent/Broker Consent Information Collection).

After a review of the comments received, we are finalizing this information collection requirement as proposed. We summarize and respond to public comments received on the burden estimates associated with the proposal to require agents, brokers, and web-brokers to document that eligibility application information has been reviewed by and confirmed to be accurate by the consumer or their authorized representative prior to application submission and to maintain that documentation for a period of 10 years.

Comment: One commenter suggested we did not estimate these costs properly. This commenter believed we underestimated these burden estimates by as much as six times. Specifically, the commenter asserted the time to produce client specific documentation for each client and unique factors such as individuals with limited English proficiency or without means to sign electronically and the estimated 30 minutes the process takes for Medicare applications is indicative the burden may be underestimated.

Response: After reviewing the regulatory changes and potential costs associated, we disagree with this commenter's suggestion that we underestimated these costs. We believe 5 minutes per enrollment interaction is a reasonable timeframe to meet these requirements. Under current § 155.220(j)(2)(ii), agents, brokers, and web-brokers must ''Provide the Federally-facilitated Exchanges with correct information . . .'' As such, these new requirements are simply building on the existing requirement to provide the FFEs with correct information, which we believe will alleviate the burdens and costs associated with these new requirements for agents, brokers, and web-brokers.[321] Requesting that a consumer respond to a text message, email, verbal question posed by the assisting agent, broker, or web-broker, etc., stating they have reviewed their application information and it is accurate should not add a significant amount of time to the enrollment process. As discussed in the proposed rule (87 FR 78252), we did not propose to specify a method for documenting that eligibility application information has been reviewed and confirmed to be accurate by the consumer or their authorized representative. This flexibility will allow each individual agent, broker, or web-broker to establish protocols and methods that will meet their needs in the most efficient manner. We believe this flexibility will allow agents, brokers, and web-brokers to meet the requirements of § 155.220(j)(2)(ii) within the estimated 5 minutes per enrollment interaction instead of the 30 minutes associated with Medicare applications.

Additionally, we only plan on requesting this documentation when investigating potentially fraudulent or noncompliant behavior. As agents, brokers, and web-brokers establish storage methods that best suit their needs, the costs associated with obtaining and submitting such documentation to HHS should be minimal. We believe that a 2-hour time window for submitting requested documentation is a reasonable assumption.

Comment: A few commenters suggested the proposed record retention period of 10 years is too long for agents, brokers, and web-brokers to maintain the documentation required by § 155.220(j)(2)(ii)(A). Another commenter stated HHS should have the record retention period align with the required record retention period of the State where the consumer is enrolled.

Response: We have considered these comments but continue to believe 10 years is an appropriate length of time to maintain the documentation required by § 155.220(j)(2)(ii)(A). As discussed in the proposed rule (87 FR 78253), this aligns with other Exchange maintenance of records requirements, including § 155.220(c)(3)(i)(E), which states internet websites of web-brokers used to complete QHP selections must ''[m]aintain audit trails and records in an electronic format for a minimum of ten years and cooperate with any audit under this section.'' We believe being consistent within the regulation and with other Exchange maintenance of records requirements is important. Enforcement actions may encompass non-compliance with different parts of the regulations making standardized timeframes for retention important for relevant document collection and review during investigations. Additionally, we do not agree that aligning with State record retention requirements is beneficial in this instance given the variability in retention periods that this approach would introduce. Many agents, brokers, and web-brokers assist consumers in multiple States and as a result, we often speak with consumers from multiple States during the course of a single investigation into potential noncompliance by an agent, broker, web-broker. If these agents, brokers, and web-brokers were retaining documents based on State laws, investigations may be hindered by one State's record retention law being shorter than another's due to records being legally discarded by the agent, broker, or web-broker under investigation. Mandating a standard 10-year retention period for all agents, brokers, and web-brokers assisting consumers in the FFEs and SBE–FPs will help mitigate these concerns when reviewing agent, broker, or web-broker responses to monitoring, audit, and enforcement activities conducted consistent with § 155.220(c)(5), (g), (h), and (k).

Comment: Some commenters stated this documentation should be part of the application process and maintained by the Federal government, making the documentation readily accessible and minimizing burden on agents, brokers, and web-brokers.

Response: We appreciate commenter's suggestions and agree there is merit to these ideas. However, it is not currently feasible to implement systematic changes of this nature. There are no plans to create a system that would allow the Federal government to store documentation for all enrollees. This type of systematic change would likely take years to implement, which would mean the protections we hope to implement with these new requirements would be severely delayed. Delaying these requirements means a longer time period during which consumers may be vulnerable to potentially fraudulent behavior by agents, brokers, and web-brokers. If a consumer receives an incorrect APTC determination or is unaware they are enrolled in a QHP, that consumer may owe money to the IRS when they file their Federal income tax return. Ensuring a consumer's income determination has been reviewed and is attested to be accurate will help avoid these situations, which is why we are requiring the consumer or their authorized representative to take an action to produce a record that is retained by the assisting agent, broker, or web-broker. We believe the consumer is in the best position to project their future income. To determine if a consumer is eligible for financial assistance, such as APTC, prior to enrollment, an estimate for income must be entered prior to the eligibility determination process. As many consumers enroll in health coverage prior to a new calendar year, the income amount they enter is an estimate based on available data, including income in prior years, as well as what consumers believe their income will be in the upcoming plan year. If we remove the consumer action from this process, which may happen if the system is changed in ways these commenters are suggesting, it may circumvent the

[321] See § 155.220(j)(2)(ii).

purpose of these new requirements (that is, consumers reviewing their information to ensure accuracy).

G. ICRs Regarding Documenting Receipt of Consumer Consent (§ 155.220(j))

We are finalizing amendments to § 155.220(j)(2)(iii) to require agents, brokers, and web-brokers to document the receipt of consumer consent prior to facilitating enrollment in coverage through the FFEs or SBE–FPs or assisting an individual in applying for APTC and CSRs for QHPs. This policy will require the consumer or their authorized representative to take an action that produces a record that they provided consent. Agents, brokers, and web-brokers will be required to maintain the documentation for a minimum of 10 years and produce it upon request in response to monitoring, audit, and enforcement activities.

We estimate costs will be associated with this policy, including those related to documenting, maintaining, and producing the records of consumer consent. This policy does not mandate any method or prescribe a template for documenting receipt of consumer consent. It will be up to the agents, brokers, and web-brokers to determine the best way to meet these regulatory requirements.

Costs related to requiring that agents, brokers, and web-brokers document the receipt of consumer consent and maintain such documentation for a period of 10 years are as follows. We estimate it will take about 5 minutes for an enrolling agent, broker or web-broker to obtain a consumer's, or their authorized representative's, record of their consent. Using the adjusted hourly wage rate of $66.68 for an Insurance Sales Agent, each enrollment will have approximately $5.56 in additional cost associated with it based on the extra time commitment from these proposed policy changes. In PY 2022, agents submitted 4,947,909 policies. Based on this number of enrollments, the total annual burden is approximately 412,326 hours with a total annual cost of approximately $27,493,898.

We will only require an agent, broker, or web-broker to produce retained records in limited circumstances related to fraud investigation or agency audits. In instances of fraud investigation, we typically request consent records of approximately 10 different applications, generally from the past 2 to 3 years. We estimate it will take an agent, broker, or web-broker approximately 2 hours to gather consent documentation for 10 applications.[322] Each year, we generally investigate approximately 120 agents, brokers, or web-brokers. Therefore, we estimate the yearly cost of producing consumer consent documentation to HHS to be approximately $16,002 (($66.68 hourly rate × 2 hours) × 120). These records are able to be mailed electronically, so there will be no cost associated with printing or mailing the records. Agency-wide audits are not completed often by HHS but may become more widespread. In those instances, we will request that the agency produce a certain number of records from the past 10 years.

The estimated total annual cost of documenting of consumer consent is $27,493,898 and the estimated total cost of producing the retained consent records is $16,002. This cost is captured in the new information request related to requiring agents, brokers, and web-brokers to document that eligibility application information has been reviewed by and confirmed to be accurate by the consumer or their authorized representative prior to application submission. Therefore, the total annual cost of the information collection requirements associated with this policy is $27,493,898. As this policy is being finalized in this rule, we will request to account for the associated information collection burden under OMB control number: 0938–NEW (CMS–10840—Agent/Broker Consent Information Collection).

After a review of the comments received, we are finalizing the information collection requirements as proposed. We received similar comments on this proposal as we did on the policy to require agents, brokers, and web-brokers to document that eligibility application information has been reviewed by and confirmed to be accurate by the consumer or their authorized representative prior to application submission and to maintain that documentation for a period of 10 years. There were no comments that were unique to the documentation of consumer consent. Therefore, we request that you please see the prior information collection section for our responses to these comments.

[322] We note that we generally expect that producing retained documentation of consumer consent and documentation that a consumer has reviewed and confirmed the accuracy of their application information will occur as part of a single audit in most cases, so the estimate for this activity in section IV.F is inclusive of the costs for this activity in this ICR.

H. ICRs Regarding Failure To File and Reconcile Process (§ 155.305(f))

We are finalizing amendments to § 155.305(f)(4) to provide that an Exchange must determine an enrollee ineligible for APTC if the enrollee has FTR status is for two consecutive tax years as opposed to one tax year (specifically, years for which tax data will be utilized for verification of household income and family size). This change will ensure that consumers are complying with the requirement to file their Federal income tax returns and reconcile past years' APTC, while also ensuring continuity of coverage in Exchange QHPs. The finalized FTR rule will impact APTC eligibility determinations for PY 2025 and beyond.

On Exchanges on the Federal platform, FTR will be conducted in the same as manner it had previously been conducted with respect to collection of information, with minimal changes to the language of the Exchange application questions necessary to obtain relevant information; as such, we anticipate that the finalized amendment will not impact the information collection OMB control number: 0938–1191 burden for consumers.

We did not receive any comments in response to the information collection requirements related to this policy. We are finalizing these information collection requirements as proposed, with a correction that there is not an option for Exchanges to remove APTC after a consumer has been in an FTR status for 1 year.

I. ICRs Regarding Income Inconsistencies (§§ 155.315 and 155.320)

We are finalizing amendments to § 155.320 to require Exchanges to accept attestations, and not set an Income DMI, when the Exchange requests tax return data from the IRS to verify attested projected annual household income, but the IRS confirms there is no such tax return data available.

Based on historical DMI data, we estimate that HHS will conduct document verification for 1.2 million fewer households per year. Once households have submitted the required verification documents, we estimate that it takes approximately 12 minutes for an eligibility support staff person (occupation No. 43–4061), at an hourly cost of $46.70, to review and verify submitted verification documents. The revisions to § 155.320 will result in a decrease in annual burden for the Federal government of 240,000 hours at a cost of $11,208,000.

In addition to the reduced administrative burden for HHS

eligibility support staff, the change will reduce the time consumers spend submitting documentation to verify their income. We estimate that consumers each spend 1 hour to submit documentation and that the proposed change will decrease burden on consumers by 1.2 million hours per year.

We will revise the information collection currently approved under OMB control number: 0938–1207 to account for this decreased burden.

We did not receive any comments in response to the information collection requirements related to this policy. We are finalizing these information collection requirements as proposed.

J. ICRs Regarding the Improper Payment Pre-Testing and Assessment (IPPTA) for State-Based Exchanges (§§ 155.1500 through 155.1515)

As described in the preamble to § 155.1510, IPPTA will replace the previous voluntary State engagement initiative with mandatory participation and related requirements. IPPTA is designed to test processes and procedures that support HHS's review of determinations of APTC made by State Exchanges and to prepare State Exchanges for the planned measurement of improper payments.

In the preamble to § 155.1510(a)(1), we state that State Exchanges will provide to HHS: (1) the State Exchange's data dictionary including attribute name, data type, allowable values, and description; (2) an entity relationship diagram; and (3) business rules and related calculations. This data documentation is currently retained by State Exchanges in a digital format and can be electronically transmitted to HHS. We estimate that the burden associated with this data transfer will be no more than 22 hours.

In the preamble to § 155.1510(a)(2), we state that HHS will provide State Exchanges with the pre-testing and assessment data request form. We will review the form and its instructions with each State Exchange prior to the State Exchange completing and returning the form and required data to HHS. Both the pre-testing and assessment data request form and the requested source data are in an electronic format. The burden associated with completion and return of the pre-testing and assessment data request form and required data will be the time it will take each State Exchange to meet with HHS to review the form and its requirements, analyze and design the database queries based on the data elements identified in the form, electronically transmit the data to HHS, and meet with HHS to verify and validate the data.

We expect respondent costs will not substantially vary since the data being collected is largely in a digitized format and that each State Exchange will be providing the application data and consumer submitted documents for approximately 10 tax households. We sought comment on these assumptions.

We estimate that gathering and transmitting the data documentation as specified in § 155.1510(a)(1) and completion of the pre-testing and assessment data request form as specified in § 155.1510(a)(2) will take 265 hours per respondent at an estimated cost of $28,493.24 per respondent on an annualized basis. To compile our estimates, we referenced our experience collecting data in our FFE pilot initiative and in working with State Exchanges in the previous voluntary State engagement initiative. We identified specific personnel and the number of hours that will be involved in collecting the data broken down by specific area (for example, eligibility verification, auto-re-enrollment, periodic data matching, enrollment reconciliation, plan management, and manual reviews including document retrieval).

Hourly wage rates vary from $92.92 for a Computer Programmer to $156.66 for a Computer and Information Systems Manager depending on occupation code and function. With a mean hourly rate of $111.07 for the respective occupation codes, the burden across the 18 State Exchanges equals 4,770 hours for a total cost of up to $512,878 on an annualized basis. As this policy is being finalized in this rule, we will request to account for the associated information collection burden under OMB control number: 0938–1439 (CMS–10829—Improper Payment Pre-Testing and Assessment (IPPTA)).

We did not receive any comments specific to the collection of information and are finalizing these requirements as proposed. We did receive and respond to related general comments of financial burdens in the earlier preamble section associated with this policy.

K. ICRs Regarding QHP Rate and Benefit Information (§ 156.210)

a. Age on Effective Date for SADPs

We are finalizing requiring issuers of Exchange-certified stand-alone dental plans (SADPs), whether they are sold on- or off-Exchange, to use the age on effective date methodology as the sole method to calculate an enrollee's age for rating and eligibility purposes, as a condition of QHP certification, beginning with Exchange certification for PY 2024. This rule does not alter any of the information collection requirements related to age determination for rating and eligibility purposes during the QHP certification process in a way that will create any additional costs or burdens for issuers seeking QHP certification. This information collection is currently approved under OMB control number: 0938–1187.

We did not receive any comments in response to the information collection requirements related to this policy. We are finalizing these requirements as proposed.

b. Guaranteed Rates for SADPs

The policy to require issuers of Exchange-certified SADPs, whether they are sold on- or off-Exchange, to submit guaranteed rates, as a condition of Exchange certification beginning with Exchange certification for PY 2024, will not impose an additional burden on issuers. Exchange-certified SADP issuers already submit either guaranteed or estimated rates during QHP certification, and are therefore familiar with the QHP certification rate submission process. This information collection is currently approved under OMB control number: 0938–1187.

We did not receive any comments in response to the information collection requirements related to this policy. We are finalizing these requirements as proposed.

L. ICRs Regarding Establishing a Timeliness Standard for Notices of Payment Delinquency (§ 156.270)

The policy to add a timeliness standard to the requirement for QHP issuers to send enrollees notice of payment delinquency will not impose an additional information burden on issuers. Per § 156.270(f), issuers are already required to send notices to enrollees when they become delinquent on premium payments, and this policy will not require any additional information collection. We are merely finalizing the addition of a requirement that issuers in the Exchanges on the Federal platform send these notices promptly and without undue delay, within 10 business days of the date the issuer should have discovered the delinquency. This information collection is currently approved under OMB control number: 0938–1341.

After a review of the comments received, we are finalizing the information collection requirements as proposed. We summarize and respond below to public comments received on the information collection requirements

related to the proposed addition of the timeliness standard to the requirement for QHP issuers to send enrollees notice of payment delinquency.

Comment: One commenter was neutral on the proposal as long as it did not require another letter to be sent to consumers.

Response: To clarify, this policy adds a timeliness requirement to the existing required notice of payment delinquency, so issuers will not be required to send another letter to consumers.

M. Summary of Annual Burden Estimates for Finalized Requirements

TABLE 14: Final Annual Recordkeeping and Reporting Requirements

Regulation Section(s)	OMB Control Number	Number of Respondents	Number of Responses	Burden per Response (hours)	Total Annual Burden (hours)	Labor Cost of Reporting ($)	Total Cost ($)
§ 153.320(d)	0938-1155	-1	-1	-60	-60	-$5,264.40	-$5,264.40
§§ 153.610, 153.700, and 153.710	0938-1155	650	650	1	650	$62,829	$62,829
§ 155.220(j)(2)(ii) and (iii)	0938-NEW	120	120	2	240	$16,002	$16,002
§ 155.220(j)(2)(ii)	0938-NEW	4,947,909	4,947,909	0.08	412,326	$27,493,898	$27,493,898
§ 155.220(j)(2)(iii)	0938-NEW	4,947,909	4,947,909	0.08	412,326	$27,493,898	$27,493,898
§ 155.320	0938-1207	-1,200,000	-1,200,000	-0.2	-240,000	-$11,208,000	-$11,208,000
§ 155.1510	0938-1439	18	18	265	4,770	$512,878	$512,878
TOTAL		8,696,605	8,696,605		590,252	$44,366,240.60	$44,366,240.60

This final rule includes one policy—repealing the ability of States to request a reduction in risk adjustment transfers (§ 153.320(d))—with information collection requests being rescinded. HHS will rescind the associated information collection once the policy is no longer in effect.

The following information collection requests will be submitted for OMB approval outside of this rulemaking, through separate **Federal Register** notices: risk adjustment issuer data submission requirements (§§ 153.610, 153,700, and 153.710); and income inconsistencies (§ 155.320).

The HHS–RADV, Navigator, FTR, application to SADPs, and QHP rate and benefit information policies do not impact any of the information collections under the following OMB control numbers: Standards Related to Reinsurance, Risk Corridors, and Risk Adjustment, OMB control number: 0938–1155; Cooperative Agreement to Support Navigators in Federally-facilitated and State Partnership Exchanges, OMB control number: 0938–1215; Data Collection to Support Eligibility Determinations for Insurance Affordability Programs and Enrollment through Health Benefits Exchanges, Medicaid and CHIP Agencies, OMB control number: 0938–1191; Initial Plan Data Collection to Support QHP Certification and other Financial Management and Exchange Operations, OMB control number: 0938–1187; and Establishment of Qualified Health Plans and American Health Benefit Exchanges, OMB control number: 0938–1156. After a review of the comments received, we are finalizing the information collection requirements as proposed. We summarize and respond to public comments received on information collection requirements for the proposals related to agent/broker standards in the ICR sections earlier in this rule (sections IV.F and IV.G).

V. Regulatory Impact Analysis

A. Statement of Need

This rule finalizes improvements to risk adjustment and HHS–RADV policies to use more recent data to recalibrate the risk adjustment models and to refine operational HHS–RADV processes, and to update Navigator standards to permit door-to-door and other unsolicited means of direct contact. The rule also finalizes requirements that agents, brokers, and web-brokers provide correct consumer information and document consumer consent; and requirements that Exchanges on the Federal platform accept an applicant's or enrollee's attestation of projected annual household income when IRS data is not available and determining the applicant or enrollee eligible for APTC or CSRs in accordance with the applicant's or enrollee's attested projected household income. In addition, the rule finalizes the implementation of the IPPTA, reduced 2024 user fee rates of 2.2 percent of premiums for FFE issuers and 1.8 percent of premiums for SBE–FP issuers, and minor updates to standardized plan options and limiting the number of non-standardized plan options issuers can offer. Finally, the rule finalizes requirements for QHP plan marketing names to include correct information, without omission of material fact, and to not include content that is misleading; revisions to the network adequacy and ECP standards at §§ 156.230 and 156.235 to state that all QHP issuers, including SADPs, subject to limited exceptions, must use a network of providers that complies with the standards described in those sections; expanded access to care for low-income and medically underserved consumers by strengthening ECP standards for QHP certification; revisions to the Exchange re-enrollment hierarchy; the addition of a timeliness standard to the requirement for QHP issuers to send enrollees notice of payment delinquency; and revisions to the final deadline for issuers to report data inaccuracies identified in payment

and collections reports for discovered underpayments of APTC to the issuer and user fee overpayments to HHS, requiring that issuers describe all such inaccuracies within three years of the end of the applicable plan year to which the inaccuracy relates to be eligible to receive an adjustment.

B. Overall Impact

We have examined the impacts of this rule as required by Executive Order 12866 on Regulatory Planning and Review (September 30, 1993), Executive Order 13563 on Improving Regulation and Regulatory Review (January 18, 2011), the Regulatory Flexibility Act (RFA) (September 19, 1980, Pub. L. 96–354), section 1102(b) of the Act, section 202 of the Unfunded Mandates Reform Act of 1995 (March 22, 1995; Pub. L. 104–4), Executive Order 13132 on Federalism (August 4, 1999), and the Congressional Review Act (5 U.S.C. 804(2)).

Executive Orders 12866 and 13563 direct agencies to assess all costs and benefits of available regulatory alternatives and, if regulation is necessary, to select regulatory approaches that maximize net benefits (including potential economic, environmental, public health and safety effects, distributive impacts, and equity). The April 6, 2023 Executive order on Modernizing Regulatory Review [323] amends section 3(f) of Executive Order 12866 to define a ''significant regulatory action'' as an action that is likely to result in a rule that may: (1) have an annual effect on the economy of $200 million or more (adjusted every 3 years by the Administrator of the Office of Information and Regulatory Affairs (OIRA) for changes in gross domestic product), or adversely affect in a material way the economy, a sector of the economy, productivity, competition, jobs, the environment, public health or safety, or State, local, territorial, or tribal governments or communities; (2) create a serious inconsistency or otherwise interfere with an action taken or planned by another agency; (3) materially alter the budgetary impacts of entitlements, grants, user fees, or loan programs or the rights and obligations of recipients thereof; or (4) raise legal or policy issues for which centralized review would meaningfully further the President's priorities or the principles set forth in the Executive order, as specifically authorized in a timely manner by the Administrator of OIRA in each case.

A regulatory impact analysis (RIA) must be prepared for rules that are significant under section 3(f)(1) of the Executive order. Based on our estimates, OMB's Office of Information and Regulatory Affairs has determined this rulemaking is ''significant'' as measured by the $200 million threshold under section 3(f)(1). Accordingly, we have prepared an RIA that to the best of our ability presents the costs and benefits of the rulemaking. Therefore, OMB has reviewed these final regulations, and the Departments have provided the following assessment of their impact.

C. Impact Estimates of the Payment Notice Provisions and Accounting Table

As required by OMB Circular A–4 (available at *https://www.whitehouse.gov/wp-content/uploads/legacy_drupal_files/omb/circulars/A4/a-4.pdf*), we have prepared an accounting statement in Table 15 showing the classification of the impact associated with the provisions of this final rule.

This final rule finalizes standards for programs that will have numerous effects, including providing consumers with access to affordable health insurance coverage, reducing the impact of adverse selection, and stabilizing premiums in the individual and small group health insurance markets and in an Exchange. We are unable to quantify all benefits and costs of this final rule. The effects in Table 15 reflect qualitative assessment of impacts and estimated direct monetary costs and transfers resulting from the provisions of this final rule for health insurance issuers and consumers.

We are finalizing the risk adjustment user fee of $0.21 PMPM for the 2024 benefit year to operate the risk adjustment program on behalf of States,[324] which we estimate will cost approximately $60 million in benefit year 2024. This estimated total cost remains stable with the approximately $60 million estimated for the 2023 benefit year.

Additionally, for 2024, we are finalizing FFE and SBE–FP user fee rates of 2.2 and 1.8 percent of premiums, respectively. These user fee rates are lower than the 2023 FFE and SBE–FP user fee rates of 2.75 and 2.25 percent of premiums, respectively.

For the implementation of the IPPTA program, we estimate recordkeeping costs for data submission to be approximately $1,025,756 beginning in PY 2024.

BILLING CODE 4120–01–P

[323] Available at *https://www.govinfo.gov/content/pkg/FR-2023-04-11/pdf/2023-07760.pdf.*

[324] As noted previously in this final rule, no State has elected to operate the risk adjustment program for the 2024 benefit year; therefore, HHS will operate the risk adjustment program for all 50 States and the District of Columbia.

TABLE 15: Accounting Table

Benefits:	Estimate	Year Dollar	Discount Rate	Period Covered
Annualized Monetized ($/year)	$79.52 Million	2022	7 percent	2023-2027
	$81.16 Million	2022	3 percent	2023-2027

Quantitative:

- Reduction of $5,264.40 in reporting costs associated with repealing the ability of prior participant States to request a reduction in risk adjustment State transfers starting with the 2025 benefit year.
- Annual cost savings of approximately $66 million to the Federal Government and $37 million to State Exchanges as a result of the revisions to income DMIs beginning in 2024.

Qualitative:

- Improved review of rebuttal evidence and reconsideration requests based on the policy to increase the review period for agent, broker, or web-broker suspensions or terminations to 45 days and 60 days, respectively.
- Requiring a consent recordation will reduce the number of unauthorized enrollments and help resolve disputes between enrolling entities and consumers, as well as between enrolling entities.
- Requiring enrolling entities to confirm information prior to submitting an application will help reduce the number of incorrect DMIs.
- Improved consumer experience by amending the hierarchy for re-enrollment to facilitate enrollment into lower cost, higher generosity plans.
- Improved continuity of care by including provider networks in re-enrollment determinations when the enrollee's current plan is no longer available.
- Improved consumer experience as a result of reduced choice overload due to limiting the number of non-standardized plan options that issuers can offer through the FFEs and SBE-FPs.
- Increased access to continuous health insurance coverage for individuals who qualify for a special enrollment period due to attesting to a future loss of MEC, associated with allowing earlier effective dates for individuals qualifying for such special enrollment periods.
- Increased access to continuous health insurance coverage for individuals losing Medicaid or CHIP who qualify for a special enrollment period with 60 days before or 90 days after to report such loss of MEC to an Exchange.
- Potential direct benefit of reducing improper payments, with secondary effects including a boost of issuer confidence in State-based Exchanges, through implementation of the IPPTA.
- Reduced burden on consumers and assisters due to requiring QHP plan marketing names to include correct information without omission of material fact and to not include misleading content.
- Potential increased access to coverage associated with adding a timeliness standard for payment delinquency notices for enrollees who become delinquent on premium payments by ensuring they are properly informed of their delinquency in time to avoid losing coverage.
- Increased access to more comprehensive provider networks due to the network adequacy and ECP policies, that will better ensure that individuals have reasonable, timely access to an adequate number, type, and distribution of providers and facilities to manage their health care needs.

Costs:	Estimate	Year Dollar	Discount Rate	Period Covered
Annualized Monetized ($/year)	$676.57 Million	2022	7 percent	2023-2027
	$691.07 Million	2022	3 percent	2023-2027

Quantitative:

- Cumulative additional cost estimate for the collection of one new data element for risk adjustment estimated to be approximately $62,829 annually for 650 issuers beginning in 2024, plus a one-time cost of $376,974 in 2024 to update their data collection processes to begin collecting this new data element.
- Increased APTC expenditures of $373 million per coverage year beginning in benefit year 2025 due to the increased coverage as a result of the policy to determine an enrollee ineligible for APTC only after two consecutive years of FTR.
- One-time costs of approximately $6.6 million in benefit year 2024 to five State Exchanges that have not fully implemented the infrastructure to run FTR operations, with annual costs to maintain FTR operations of approximately $10 million beginning in 2024.
- Recordkeeping costs incurred by State-based Exchanges related to IPPTA, estimated to be a total annual cost of approximately $512,878 across all 18 State Exchanges.
- One-time cost of $500,000 in 2023 for HHS to implement a 60-day extension for households with income DMIs for Exchanges on the Federal platform and $9 million for State Exchanges to implement 60-day extension.

- One-time cost of $500,000 in 2023 for HHS to accept attestation for households without IRS data for Exchanges on the Federal platform and $9 million for State Exchanges to implement accepting attestation for households without IRS data.
- Increased costs of $175 million per year starting in 2024 associated with increased APTC expenditures due to increased coverage as a result of the income DMI policies.
- Increased costs of $161 million per coverage year beginning in 2023 associated with increased APTC expenditures due to modifying current coverage effective date rules for qualifying individuals who qualify for a special enrollment period due to a future loss of MEC for Exchanges on the Federal platform.
- Increased costs of $98 million per coverage year beginning in 2024 associated with increased APTC expenditures due to adding a new special rule permitting Exchanges on the Federal platform to allow consumers up to 60 days before and up to 90 days after to report a loss of Medicaid or CHIP.
- Increased costs of $48 million per year beginning in 2024 associated with increased APTC expenditures due to amending the re-enrollment hierarchy to allow Exchanges to direct re-enrollment for enrollees who are eligible for CSR in accordance with § 155.305(g) from a bronze QHP to a silver QHP with a lower or equivalent premium after APTC provided certain conditions are met.
- Cumulative additional cost of approximately $27,509,900 per year associated with a new information collection related to requiring agents, brokers, and web-brokers to document the receipt of consumer consent and retaining eligibility and consent records documentation.
- Cumulative additional costs of approximately $27,493,898 per year with a new information request related to requiring agents, brokers, and web-brokers to document that eligibility application information has been reviewed by and confirmed to be accurate by the consumer or their authorized representative prior to application submission.
- Lost revenue of approximately $3,674,735 annually for the top one percent of enrolling agents during open enrollment period due to time constraints related to the requirement to document consumer consent.

Qualitative:

- Under the limits to the number of non-standardized plan options that issuers of QHPs can offer through the FFEs and SBE-FPs, we estimate that approximately 17,532 of the total 101,453 non-standardized plan option plan-county combinations (17.3 percent) will be discontinued as a result of this limit in PY 2024. Relatedly, we estimate that approximately 0.81 million of the 12.2 million enrollees on the FFEs and SBE-FPs (6.6 percent) will be affected by these discontinuations in PY 2024. Finally, we estimate an average reduction of 0.03 network IDs per issuer, product network type, metal level, and service area, meaning we anticipate network IDs will remain largely unaffected by this limit for PY 2024.
- Termination of these non-standardized plan options may affect issuers' balance of enrollment across plans and the premium rating for each of those plans, and may require issuers to send discontinuation notices for enrollees whose plans are being discontinued.
- Increase in administrative burden to State Exchanges that choose to adopt the option to prohibit issuers from terminating coverage mid-plan year for child dependent enrollees because they reached the maximum allowable age.
- Potential administrative burden on issuers to comply with new plan marketing name standards in Exchanges on the Federal platform, and in any State Exchanges that choose to update specific plan marketing name standards based on the new rule; potential burden in these State Exchanges to support and enforce these new standards.
- Increased burden for plans that do not currently use a provider network and wish to remain in the Exchanges to comply with the requirement that all QHPs and SADPs use a network and comply with the network adequacy standards at § 156.235 beginning with PY 2024.
- Increased burden to consumers, agent/brokers, and assisters to change enrollment to another plan if a consumer's current plan does not use a provider network and exits the Exchanges due to the requirement that all QHPs and SADPs use provider networks beginning with PY 2024.
- Potential short-term impact of reallocated resources for issuers resulting from need to reallocate staffing or resources to attest or file a discrepancy of its SVA within the compressed 15-day window.

Transfers:	Estimate	Year Dollar	Discount Rate	Period Covered
Annualized Monetized ($/year)	-$400.62 Million	2022	7 percent	2023-2027
	-$410.73 Million	2022	3 percent	2023-2027

Quantitative:

- Reduction in FFE and SBE-FP user fee transfers from issuers to the Federal Government of $404 million for benefit year 2024 compared to if the user fee level from the prior benefit year were maintained in 2024. We estimate additional reductions in FFE and SBE-FP user fee transfers from issuers to the Federal Government of $563 million in 2025, $562 million in 2026, and $563 million in 2027 if the 2024 user fee level were maintained in subsequent years.

BILLING CODE 4120–01–C

This RIA expands upon the impact analyses of previous rules and utilizes the Congressional Budget Office's (CBO) analysis of the ACA's impact on Federal

spending, revenue collections, and insurance enrollment. Table 16 summarizes the effects of the risk adjustment program on the Federal budget from fiscal years 2024 through 2028, with the additional, societal effects of this final rule discussed in this RIA. We do not expect the provisions of this final rule to significantly alter CBO's estimates of the budget impact of the premium stabilization programs that are described in Table 16.

TABLE 16: Estimated Federal Government Outlays and Receipts for the Risk Adjustment and Reinsurance Programs from Fiscal Year 2024-2028, in billions of dollars[325]

Year	2024	2025	2026	2027	2028	2024-2028
Risk Adjustment and Reinsurance Program Payments	6	7	7	8	8	36
Risk Adjustment and Reinsurance Program Collections	6	7	7	8	8	36

Note: Risk adjustment program payments and receipts lag by one quarter. Receipt will fully offset payments over time. Source: Congressional Budget Office. Federal Subsidies for Health Insurance Coverage for People Under Age 65: 2022 to 2032. Table A-2. June 30, 2022. *https://www.cbo.gov/system/files/2022-06/57962-health-insurance-subsidies.pdf.*

1. Data for Risk Adjustment Model Recalibration for 2024 Benefit Year

We proposed to use the 2018, 2019, and 2020 benefit year enrollee-level EDGE data to recalibrate the 2024 benefit year risk adjustment models with an exception for the use of the 2020 benefit year to recalibrate the age-sex coefficients for the adult models. Specifically, we proposed to use only 2018 and 2019 benefit year enrollee-level EDGE data to recalibrate the age-sex coefficients in the adult models to account for the observed anomalous decreases in the unconstrained coefficients for the 2020 benefit year enrollee-level EDGE data for older adult enrollees, especially older female adult enrollees. However, we are finalizing that we will use the 2018, 2019, and 2020 benefit year enrollee-level EDGE data to recalibrate the 2024 benefit year risk adjustment models, for all coefficients without exception, including the adult age-sex coefficients. Consistent with the approach outlined in the 2020 Payment Notice to no longer rely upon MarketScan® data for recalibrating the risk adjustment models, as finalized in this rule, we will continue to recalibrate the risk adjustment models for the 2024 benefit year using only enrollee-level EDGE data, and will continue to use blended, or averaged, coefficients from the 3 years of separately solved models for the 2024 benefit year model recalibration. This approach seeks to maintain stability in the markets by capturing some degree of year-to-year cost shifting without over-relying on any factors unique to one particular year. Additionally, we anticipate that the recalibration of the HHS risk adjustment models using 2018, 2019, and 2020 EDGE data for the blending of all HHS risk adjustment model coefficients will have a minimal impact on risk scores and transfers for issuers in the individual and small group (including merged) markets because our analysis found that the 2020 enrollee-level EDGE data is largely comparable to previous years' data sets.

We did not receive any comments in response to the burden estimates associated with the proposed policy or any of the alternatives presented in the proposed rule. We are finalizing these estimates with the modification discussed in the above paragraph. We note that although the age-sex coefficients for the adult risk adjustment models differ slightly from their proposed values, we anticipate that these changes will have a minimal impact on risk scores and transfers for issuers in the individual and small group (including merged) markets.

2. Repeal of Risk Adjustment State Flexibility To Request a Reduction in Risk Adjustment State Transfers (§ 153.320(d))

We are finalizing the elimination of the ability for prior participant States to request reductions of risk adjustment State transfers calculated by HHS under the State payment transfer formula beginning with the 2025 benefit year. We anticipate that this change will have a minimal impact as only one State, Alabama, is considered a prior participant State and will no longer be able to request reductions in risk adjustment transfers beginning with the 2025 benefit year.

We did not receive any comments in response to the burden estimates for this policy. We are finalizing these estimates as proposed.

3. Risk Adjustment Issuer Data Requirements (§§ 153.610, 153.700, and 153.710)

We are finalizing the collection and extraction of a new data element, the QSEHRA indicator, as part of the required risk adjustment data submissions issuers make accessible to HHS through their respective EDGE servers. For the 2023 and 2024 benefit years, similar to the transitional approach finalized for the ICHRA indicator, issuers will be required to populate the field for the QSEHRA indicator using only data they already collect or have accessible regarding their enrollees. Then, beginning with the 2025 benefit year, the transitional approach will end, and issuers will be required to populate the field using available sources (for example, information from Exchanges, and requesting information directly from enrollees) and, in the absence of an existing source for particular enrollees, to make a good faith effort to ensure collection and submission of the QSEHRA indicator for these enrollees. HHS will provide additional guidance on what constitutes a good faith effort to ensure collection and submission of the QSEHRA indicator beginning with 2025 benefit year data submissions in the future. An updated burden estimate associated with this policy may be found in section IV.C of this final rule, in the *ICRs Regarding Risk Adjustment Issuer Data Submission Requirements (§§ 153.610, 153.700, and 153.710)* section earlier in this rule.

In addition, we are finalizing the extraction of the plan ID and rating area data elements from issuers' EDGE servers that issuers already make

[325] Reinsurance collections ended in FY 2018 and outlays in subsequent years reflect remaining payments, refunds, and allowable activities.

accessible to HHS as part of the required risk adjustment data for additional prior benefit years of data. Specifically, we are finalizing an amendment to the applicability date for the extraction of these two data elements from issuers' enrollee-level EDGE data as finalized in the 2023 Payment Notice to also allow extraction of these data elements from the 2017, 2018, 2019 and 2020 benefit year data.

We did not receive any comments in response to the burden estimates for these policies. We are finalizing these estimates as proposed.

4. Risk Adjustment User Fee for 2024 Benefit Year (§ 153.610(f))

For the 2024 benefit year, HHS will operate risk adjustment in every State and the District of Columbia. As described in the 2014 Payment Notice (78 FR 15416 through 15417), HHS' operation of risk adjustment on behalf of States is funded through a risk adjustment user fee. For the 2024 benefit year, we are using the same methodology to estimate our administrative expenses to operate the risk adjustment program as was used in the 2023 Payment Notice. Risk adjustment user fee costs for the 2024 benefit year are expected to remain stable from the prior 2023 benefit year estimates. However, we project higher enrollment than our prior estimates in the individual and small group (including merged) markets in the 2023 and 2024 benefit years due to the enactment of the ARP [326] and section 12001 of the IRA,[327] which extended the enhanced PTC subsidies in section 9661 of the ARP through the 2025 benefit year. We estimate that the total cost for HHS to operate the risk adjustment program on behalf of all 50 States and the District of Columbia for the 2024 benefit year will be approximately $60 million, and therefore, the proposed risk adjustment user fee will be $0.21 PMPM. Because enrollment projections have increased for the 2023 and 2024 benefit year due to the IRA and the proposed 2024 risk adjustment user fee is $0.01 PMPM lower than the 2023 user fee, we expect the risk adjustment user fee for the 2024 benefit year to reduce the transfer amounts collected or paid by issuers of risk adjustment covered plans.

We did not receive any comments in response to the burden estimates for this policy. We are finalizing these estimates as proposed.

[326] Public Law 117–2.

[327] Public Law 117–169.

5. Risk Adjustment Data Validation Requirements When HHS Operates Risk Adjustment (HHS–RADV) (§ 153.630)

We are finalizing, beginning with 2022 benefit year HHS–RADV, changes to the HHS definition for the materiality threshold for the HHS–RADV exemption under § 153.630(g)(2) from $15 million total annual premiums Statewide to 30,000 BMM Statewide in the benefit year being audited. The purpose of this policy is to address the estimated increase in costs to complete the initial validation audit (IVA) over the years and to ensure the materiality threshold is not eroded as costs increase. We quantified this increase in IVA cost in the Standards Related to Reinsurance, Risk Corridors, and Risk Adjustment PRA package (OMB Control Number 0938–1155), which we updated in 2022.[328] We believe the number of issuers exempt from HHS–RADV for any given benefit year under the new 30,000 BMM materiality threshold will not be significantly different than the number of issuers exempt under the current $15 million total annual premium Statewide threshold, and therefore, we believe there will not be an overall reduction in burden. However, those issuers that are exempted from HHS–RADV will have less burden and administrative costs than an issuer subject to these requirements.

We are finalizing, beginning with 2021 benefit year HHS–RADV, the removal of the policy to only make adjustments to reflect exiting outlier issuers HHS–RADV results when the issuer is a positive error rate outlier in the applicable benefit year's HHS–RADV. With this policy, exiting and non-exiting outlier issuers are treated the same, and HHS is applying HHS–RADV adjustments to risk scores and risk adjustment State transfers for both positive and negative error rate outlier exiting and non-exiting issuers. Based on our experience, we estimate the number of negative error rate outlier exiting issuers in any given benefit year will be very small, and therefore, we believe changing this policy will not significantly increase burden.

We are also finalizing a change to the attestation and discrepancy reporting window to file a discrepancy report or confirm second validation audit (SVA) findings from 30 calendar days to within 15 calendar days of the notification by HHS, beginning with the 2022 benefit year HHS–RADV. Shortening this attestation and discrepancy reporting window will improve our ability to finalize SVA findings results prior to release of the HHS Risk Adjustment Data Validation (HHS–RADV) Results Memo and the Summary Report of Risk Adjustment Data Validation Adjustments to Risk Adjustment Transfers for the applicable benefit year in a timely fashion. This change will support timely reporting of information on HHS–RADV adjustments to risk adjustment State transfers in issuers' MLR reports.

Based on our experience operating HHS–RADV, few issuers have insufficient pairwise agreement and receive SVA findings, and the 15-calendar-day attestation and discrepancy reporting window is consistent with the IVA sample and EDGE discrepancy reporting windows under §§ 153.630(d)(1) and 153.710(d)(1). The shortened window also does not change the underlying burden for an issuer to attest or file a discrepancy of its SVA results as those tasks generally remain the same. Instead, this change only relates to the timeframe to complete these activities. Although there may be a potential increase in administrative burden to issuers resulting from the need to reallocate staffing or resources to attest or file a discrepancy of its SVA within the compressed 15-day window, the existing overall burden hours and associated resource expenditures to complete this task remains unchanged. Further, we believe that this shortened reporting window will not be overly burdensome to the few impacted issuers, and that any disadvantages of this shortened reporting window will be outweighed by the benefits of timely resolution of any discrepancies before the release of the applicable benefit year HHS RADV Results Memo and the Summary Report of Risk Adjustment Data Validation Adjustments to Risk Adjustment Transfers for the applicable benefit year.

After reviewing the public comments, we are finalizing the burden estimates as proposed. We summarize and respond to public comments received regarding the impact of the change to the HHS–RADV materiality threshold definition below.

Comment: One commenter agreed that the proposed materiality threshold of 30,000 BMM will continue to ease the administrative burden associated with HHS–RADV audits. Another commenter encouraged HHS to consider changing the materiality threshold for HHS–RADV participation to a percentage of Statewide member months to reduce the burden of HHS–RADV on issuers that do not materially impact risk adjustment transfers.

[328] Available at *https://www.reginfo.gov/public/do/PRAViewICR?ref_nbr=202207-0938-001.*

Response: As explained in section III.A.7 of this final rule, we believe that a materiality threshold of 30,000 BMM appropriately balances the goals of the HHS–RADV process and the burden of the process on smaller issuers. As stated above, we do not anticipate that a materiality threshold of 30,000 BMM will change the current estimated burden of the annual HHS–RADV requirements on issuers. The burden of annual HHS–RADV requirements may decrease over time as a materiality threshold of 30,000 BMM will result in a more consistent pool of issuers subject to random and targeted sampling than a threshold of $15 million in total annual premiums, which could increase the number of issuers subject to annual HHS–RADV audits over time as premiums grow. We did not consider or propose using a percentage of Statewide member months as the metric for the materiality threshold as that metric does not have a relationship with the costs to conduct the audit. We therefore decline to adopt use of such a metric as part of this final rule.

6. EDGE Discrepancy Materiality Threshold (§ 153.710)

We are finalizing an amendment to the materiality threshold for EDGE discrepancies at § 153.710(e) to align with the materiality threshold as described in the preamble of part 2 of the 2022 Payment Notice final rule (86 FR 24194 through 24195) to reflect that the amount in dispute must equal or exceed $100,000 or 1 percent of the total estimated transfer amount in the applicable State market risk pool, whichever is less. HHS generally only takes action on reported material EDGE discrepancies when an issuer's submission of incorrect EDGE server premium data has the effect of increasing or decreasing the magnitude of the risk adjustment transfers to other issuers in the market (83 FR 16970 through 16971). We do not believe that the updated materiality threshold definition for EDGE discrepancies will impose additional administrative burden on issuers beyond the effort already required to submit data to HHS for the purposes of operating State market risk pool transfers, as previously estimated in part 2 of the 2022 Payment Notice (86 FR 24273 through 24274).

We did not receive any comments in response to the burden estimates for this policy. We are finalizing these estimates as proposed.

7. Exchange Blueprint Approval Timelines (§ 155.106)

As discussed in section III.B.1 of this final rule, the proposed regulatory amendments will not eliminate the requirement for States seeking to transition to a different Exchange operational model (FFE to SBE–FP or State Exchange, or SBE–FP to State Exchange) to submit an Exchange Blueprint or for HHS to approve, or conditionally approve, a State's Exchange Blueprint. It will only impact the timeline, by providing additional time for HHS to provide approval, or conditional approval.

We do not anticipate any additional burden associated with this policy as States are currently required to submit an Exchange Blueprint to HHS for approval, or conditional approval, and HHS is currently required to approve, or conditionally approve, a State's Exchange Blueprint.

We did not receive any comments in response to the burden estimates for this policy. We are finalizing these estimates as proposed.

8. Navigator, Non-Navigator Assistance Personnel, and Certified Application Counselor Program Standards (§§ 155.210 and 155.225)

As discussed in section III.B.2, new rules will permit enrollment assistance on initial door-to-door outreach. Currently, Assisters are permitted to go door-to-door to engage in outreach and education activities, just not enrollment assistance. Therefore, this change will not impose any new or additional opportunity costs on Assisters, and we do not anticipate any estimated burden associated with this proposal. The benefits of this proposal will be eliminating barriers to coverage access by maximizing pathways to enrollment. We believe it is important to be able to increase access to coverage for those whose ability to travel is impeded due to mobility, sensory or other disabilities, who are immunocompromised, and who are limited by a lack of transportation. We anticipate that this proposal will be a positive step toward enabling Assisters to reach a broader consumer base in a timely manner—helping to reduce uninsured rates and health disparities by removing underlying barriers to accessing health coverage.

We sought comment on these assumptions, specifically about any reduction in costs, benefits, or burdens on Assisters and consumers as related to this policy.

After reviewing the public comments, we are finalizing the burden estimates as proposed. We summarize and respond to public comments received regarding the impact of the proposed change to repeal the provisions that currently prohibit Assisters from going door-to-door or using other unsolicited means of direct contact to provide enrollment assistance to consumers below.

Comment: We received many comments expressing appreciation that we are striving to build-in more flexibility for Assisters to go into the community and reach the patients who need the most support. These commenters stated that Assisters being able to travel to an enrollee's residence enhances the opportunity to get more people enrolled in health insurance coverage and that this provision will allow Navigators and other types of Assisters to better meet patients where they are, hopefully allowing more people to receive health coverage.

Response: We agree that additional flexibility will help reduce burden not only for Assisters but for consumers experiencing chronic illness, inflexible schedules, lack of child care, lack of transportation, and other adverse social determinants of health.

9. Extension of Time To Review Suspension Rebuttal Evidence and Termination Reconsideration Requests (§§ 155.220(g) and 155.220(h))

As discussed in section III.B.3 of this final rule, the regulatory amendments we are finalizing will provide HHS with up to an additional 15 calendar days to review evidence submitted by agents, brokers, or web-brokers to rebut allegations that led to the suspension of their Exchange agreement(s) and up to an additional 30 calendar days to review evidence submitted by agents, brokers, or web-brokers to request reconsideration of termination of their Exchange agreement(s).

We do not estimate much burden associated with these amendments, as there is no requirement for HHS to utilize the additional 15 or 30 calendar days and this will only impact a very small percentage of enrolling agents, brokers, or web-brokers. Only those agents, brokers, or web-brokers that are reasonably suspected to have engaged in fraud or abusive conduct, or those with a specific finding of noncompliance against them or who have exhibited a pattern of noncompliance or abuse that may pose imminent consumer harm will be impacted.

As discussed in the preamble, this policy will not impose any new requirements on agents, brokers, or web-brokers. At present, agents, brokers, or web-brokers whose Exchange agreement(s) are suspended or terminated may submit rebuttal evidence or reconsideration requests for HHS to consider. During this review, the submitting agent, broker, or web-broker remains unable to enroll consumers on

the FFEs. This process will not change. While we will be increasing the amount of potential time the review process will take, which could lead to slightly longer periods during which agents, brokers, or web-brokers cannot enroll consumers through the FFEs and SBE–FPs, we will not be mandating HHS utilize the additional 15 or 30 calendars days for its reviews. For this reason, we do not expect any impact on agents, brokers, or web-brokers based on this policy.

We did not receive any comments in response to the burden estimates for this policy. We are finalizing these estimates as proposed.

10. Providing Correct Information to the FFEs and Documenting Receipt of Consumer Consent (§ 155.220(j))

As discussed in section III.B.3 of this final rule, the regulatory amendments we are finalizing will require agents, brokers, and web-brokers assisting with and facilitating enrollment in coverage through FFEs and SBE–FPs or assisting an individual with applying for APTC and CSRs for QHPs to document that eligibility application information has been reviewed by and confirmed to be accurate by the consumer or their authorized representative, designated in compliance with § 155.227, prior to application submission. The policy will require the consumer or their authorized representative to take an action that produces a record showing the consumer or their authorized representative reviewed and confirmed the accuracy of their application information that must be maintained by the assisting agent, broker, or web-broker and produced upon request in response to monitoring, audit, and enforcement activities.

In addition, we are finalizing regulatory amendments that will require agents, brokers, and web-brokers assisting with and facilitating enrollment through FFEs and SBE–FPs or assisting an individual with applying for APTC and CSRs for QHPs to document the receipt of consent from the consumer or their authorized representative, designated in compliance with § 155.227, qualified employers, or qualified employees they are assisting. The policy will require the consumer or their authorized representative to take an action that produces a record of consent that must be maintained by the assisting agent, broker, or web-broker and produced upon request in response to monitoring, audit, and enforcement activities. As we anticipate these two documentation processes will likely be occurring as part of the same consumer interaction,[329] the two policies are discussed together below.

A potential cost to consider is the additional time it will take to process and submit each consumer's eligibility application. It currently takes approximately 30 minutes for an assisting agent, broker, or web-broker to submit a consumer's eligibility application. These finalized requirements may add approximately five minutes additional time, per the new requirement, to each application, making each application submission take 40 minutes under the new finalized policies. This means that for every six policies submitted under the new finalized regulatory requirements, there would have been two additional applications that could have been submitted under the former regulatory requirements (10 extra minutes per application × 3 applications = 30 minutes, which is the estimated completion time for applications at present). If we assume agents, brokers, and web-brokers work traditional 8-hour days, they would have been able to enroll approximately 4 more consumers per day (1 application per 30 minutes = 16 per day; 1 application per 40 minutes = 12 per day). An approximation of commission for each submitted policy is $16.67.[330] Therefore, the finalized regulatory text may result in $66.68 lost per day per agent, broker, or web-broker ($16.67 × 4 fewer applications submitted).

However, there will only be a potential loss of income if an agent, broker, or web-broker were constantly enrolling consumers and running out of time during the workday. It is unlikely agents, brokers, and web-brokers are constantly enrolling consumers non-stop throughout an 8-hour workday. During PY 2021, agents submitted 3,630,849 policies. The top 1 percent of agents[331] submitted 1,159,608 policies during PY 2021, which equals approximately 7 submitted policies per day.[332] As it was determined under the new policies that an agent could submit approximately 12 applications per day, there is no clear impact associated with these policies as far as the number of applications being submitted. However, this could be different during the Open Enrollment Period (OEP) as there is generally more enrollment activity during OEP than regular business days. During PY 2022 Open Enrollment, agents submitted 2,572,341 applications, which translates to 38 applications per agent. The top selling 1 percent of agents submitted 689,146 applications during Open Enrollment, which is approximately 18 applications per day.[333] Under the finalized regulatory amendments, a top-selling agent could lose approximately 6 applications per day due to time constraints. OEP runs from November 1 through January 15, which is 76 days. Under the assumption an agent is working 5 days per week for 8 hours per day, an agent may submit 330 fewer applications during OEP (55 days working × 6 fewer applications per day). Using the above reference of $16.67 commission gained per submitted policy, a top-selling agent may lose $5,501.10 in commissions during OEP (330 applications × $16.67). For the 668 agents in the top selling 1 percent, the total potential commission loss may be approximately $3,674,735 (668 agents × $5,501.10). It is likely these agents are working more hours than we accounted for, meaning the 330 fewer applications and $3,674,735 in lost commissions is an estimate such that the actual loss of commission will be less than we estimated.

We did not receive any comments in response to the burden estimates for this policy. We are finalizing these estimates as proposed.

11. Failure To File and Reconcile Process (§ 155.305)

We are finalizing a requirement that Exchanges determine an enrollee as ineligible for APTC if their taxpayer did not file a Federal income tax return and reconcile their APTC for two consecutive tax years, rather than one tax year as currently outlined at § 155.305(f)(4). We believe this policy will benefit both Exchanges and consumers by ensuring that consumers are complying with the requirement to file their Federal income tax returns and reconcile past years' APTC, while also providing continuity of coverage for consumers who might otherwise go uninsured after losing ATPC.

[329] We note that obtaining documentation of consumer consent must occur before an application is completed. In contrast, obtaining documentation that a consumer has reviewed and confirmed the accuracy of their application information must necessarily take place during or after the application is completed and prior to application submission. However, we generally expect that the documentation that will be required before and after the completion of the application, will occur as part of a single interaction in most cases.

[330] This was derived using the Insurance Sales Agent mean hourly wage from the above wage estimate table of $33.34 and dividing in half.

[331] The current number of agents registered with the Exchange is 66,893. We looked at data from the 668 top-selling agents.

[332] This assumed an agent worked 250 days per year (50 weeks at 5 days per week).

[333] This assumed an agent worked 5 days per week at 8 hours per day, which is likely a low estimate.

We anticipate that this policy will increase APTC expenditures by promoting continuous enrollment of consumers with APTC, who, absent this policy, would likely choose to terminate their coverage altogether after losing their APTC eligibility due to having an FTR status. Based on our own analysis, for Open Enrollment 2020, about 116,000 enrollees with an FTR status were automatically re-enrolled into an Exchange QHP without APTC; by March 2020, approximately 14,000 (12 percent) of those enrollees were still enrolled in an Exchange QHP without APTC. Assuming the same enrollment numbers for Open Enrollment 2025 with the new 2-year FTR policy, if the 102,000 enrollees who ended their QHP coverage after losing APTC were given another year of APTC eligibility to confirm compliance or come into compliance with the requirement to file and reconcile, we estimate that all 102,000 likely enrollees would have retained coverage for another coverage year. However, based on our experience running FTR since 2015, we anticipate that about 20,400 (20 percent) of these enrollees would have likely received a second, consecutive FTR flag and would be re-enrolled into coverage without APTC due to their failure to file and reconcile for two consecutive tax years. Therefore, we estimate that this 2-year FTR policy is likely to increase APTC expenditures by approximately $373 million per year beginning in plan year 2025 for those consumers who have not filed and reconciled for only one tax year (approximately 81,600) and retain their APTC eligibility (using average APTC amount of approximately $508 per month multiplied by the average retention rate in an Exchange QHP of 9 months).

We are also aware of five States that have only recently transitioned to operating their own State Exchange and have not yet fully implemented the infrastructure to run FTR operations for plan years through 2023 due to the flexibility the Exchanges were given to temporarily pause FTR operations between 2021 and 2023 due to the COVID–19 PHE. We estimate the one-time costs for these five States to fully implement the functionality and infrastructure to conduct FTR operations to be approximately $6.6 million and estimate the annual costs to maintain FTR operations to be approximately $10 million.

We did not receive any comments in response to the burden estimates for this policy. We are finalizing these estimates as proposed.

12. Income Inconsistencies (§§ 155.315 and 155.320)

We anticipate that the finalized revision to § 155.315 will impose a minimal regulatory and cost burden on Exchanges using the Federal platform and State Exchanges in order to grant the 60-day extension for income DMIs. We estimate that the change to grant a 60-day extension to applicants with income DMIs will result in a $500,000 one-time cost to Exchanges on the Federal platform and to each of the State Exchanges using their own platform. Therefore, we estimate that the total cost for State Exchanges will be $9 million to comply with the requirement to grant the 60-day extension, and the total cost to the Federal Government will be $500,000.

We anticipate that the revisions to § 155.320 will impose a minimal regulatory burden and a one-time cost burden on the Exchanges using the Federal platform and State Exchanges using their own platform. We estimate that the change to accept the income attestation for households for which the Exchange requests tax return data from the IRS to verify attested projected annual household income but for whom the IRS confirms there is no such tax return data available will result in a $500,000 one-time cost to the Federal Government and a one-time cost of $500,000 to each of the State Exchanges using their own platform. We also anticipate $175 million in increased APTC costs annually as a result of this policy, due to applicants remaining enrolled through the end of the plan year instead of losing eligibility for APTC for failing to provide sufficient documentation to verify their projected household income.

However, we do anticipate that the revisions to § 155.320 will also result in some decreases in ongoing administrative costs for the Exchanges using the Federal platform and State Exchanges. The change will eliminate the requirement to generate income DMIs when the Exchange requests tax return data from the IRS for an applicant or enrollee and the IRS confirms no such data is available. For Exchanges on the Federal platform, based on historical DMI data, we anticipate that this will result in 1.2 million fewer households receiving an income DMI, which will result in $66 million in annual cost savings to the Federal Government. Additionally, State Exchanges using their own platform will also experience annual cost savings of $37 million due to this change.

We do not anticipate that these changes will impose a cost or regulatory burden on issuers. However, the changes will have a financial impact on issuers via the continued enrollment of consumers who otherwise would have experienced APTC adjustment and thus would have been likely to disenroll.

After reviewing the public comments, we are finalizing the burden estimates as proposed. We summarize and respond to public comments received regarding the impact of the change to accept household income attestation when IRS is contacted but does not return data and to provide an automatic 60-day extension for Income DMIs below.

Comment: One commenter noted concerns that these calculations would result in increased spending for the Federal Government.

Response: We agree that Federal Government spending will increase, but this will be primarily due to more consumers appropriately maintaining eligibility for financial assistance that they need to stay enrolled in coverage, which positively impacts health equity, continuous coverage, and the risk pool. We note that these consumers are still subject to the reconciliation process when filing their taxes, which may result in repayment of APTC and help account for any potential excess financial assistance beyond what they were eligible for. Additionally, households are required to provide true answers to application questions under penalty of perjury.

13. Annual Eligibility Redetermination (§ 155.335(j))

In the HHS Notice of Benefit and Payment Parameters for 2024 proposed rule (87 FR 78206, 78259), we proposed changes to allow Exchanges, beginning in PY 2024, to direct re-enrollment for enrollees who are eligible for CSRs in accordance with § 155.305(g) from a bronze QHP to a silver QHP, if certain conditions are met (''bronze to silver crosswalk policy''), and to require all Exchanges (Exchanges on the Federal platform and State Exchanges) to incorporate provider network considerations into the re-enrollment hierarchy. After reviewing public comments, we are finalizing proposed changes to the re-enrollment hierarchy with modifications. Specifically, we are amending the proposed regulations to clarify that Exchanges implementing the bronze to silver crosswalk policy will compare net monthly silver plan premiums for the future year with net monthly bronze plan premiums for the future year, as opposed to net monthly bronze plan premiums for the current year (where net monthly premium is the enrollee's responsible amount after

applying APTC). Additionally, we changed the structure and some content of the regulation to simplify the regulatory text and to clearly characterize the rule's provider network continuity protections for enrollees whose QHP is no longer available, compared to enrollees eligible for the bronze to silver crosswalk policy under paragraph (j)(4).[334]

As discussed in the proposed rule, we anticipate that the inclusion of additional criteria in the auto re-enrollment process will increase costs and burden for issuers and Exchanges, although we are unable to quantify this increase. However, we believe initially limiting the scope of the bronze to silver crosswalk policy to only CSR-eligible enrollees who are currently in a bronze QHP and have a lower or equivalent after APTC cost silver QHP available will allow issuers and Exchanges to incrementally update their processes, as opposed to including both premium (after APTC) and out-of-pocket cost (OOPC) throughout the hierarchy in PY 2024. Additionally, we believe that allowing the Exchange to direct re-enrollment for CSR-eligible enrollees from bronze plans to silver plans with lower or equivalent premium after APTC will facilitate enrollment into silver CSR plans and help reduce CSR forfeiture. Notwithstanding these burdens, we believe changes to the re-enrollment process finalized in this rule, in combination with improved consumer notification, will further streamline the consumer shopping experience, enhance consumer understanding of plan options, and help move enrollment into more affordable, higher generosity plans, especially in cases where market conditions have substantially increased the cost of an enrollee's current plan. By amending the current Federal hierarchy for re-enrollment to incorporate provider networks and facilitate enrollment into lower cost, higher generosity plans, we believe we will be promoting consumer access to affordable, quality coverage.

We sought comment on the estimated costs and benefits described in this section, as well as any additional impacts on consumers, issuers, and Exchanges as a result of this policy. We summarize and respond in preamble and below to public comments received regarding the impact of the changes to the auto re-enrollment policy.

Comment: Some commenters raised concerns that implementing this policy for the 2024 plan year would be difficult for issuers and cause confusion for consumers. Some commenters with this concern requested that HHS delay the policy if it were finalized, and that HHS not change the auto re-enrollment system until after the implementation of other proposed policies including the proposals to require plan and plan variation marketing accuracy and to limit the number of non-standardized plan options that issuers may offer through the Exchanges. These commenters expressed concerns that auto re-enrolling consumers into a different plan than their current QHP would exacerbate potential confusion related to these other policies. They requested that HHS wait to implement any changes related to auto re-enrollment until issuers have finalized their product decisions in accordance with new plan variation marketing requirements so that plan and plan variation marketing names are accurate, consistent, and understood by consumers before consumers are mapped into new plans they are unfamiliar with.

Response: As noted in section III.B.6. of the preamble, Exchanges on the Federal platform will implement the new policy at § 155.335(j)(4) by incorporating network ID into existing requirements for issuer submissions through the crosswalk process, which, per existing rules at § 155.335(j)(2), already requires that if no plans under the same product as an enrollee's current QHP are available for renewal, the Exchange will auto re-enroll the enrollee in the product most similar to their current product with the same issuer.[335] We believe that plan network ID will be an effective method of network comparison for Exchanges on the Federal platform because QHP Certification Instructions specify that if specific providers are in-network for some of an issuer's products but not others, the issuer must establish separate network IDs to enable mapping the plans to the applicable network IDs. We will also work closely with State Exchanges to share best practices for implementing this policy. Further, based on experience from past years, a majority of enrollees who were crosswalked into a different product with the same issuer had the same network ID and product type (for example, HMO, PPO), and so we anticipate that this policy will reinforce and not disrupt current auto re-enrollment processes.[336] Finally, we believe that issuer implementation burden will be mitigated because, as discussed in the proposed rule, Exchanges, not issuers, will be responsible for identifying enrollees eligible for the bronze to silver crosswalk policy under paragraph (j)(4).[337] Given the benefits that this policy will provide to consumers who will be enrolled in more generous coverage for no greater cost, we will not delay its effectuation. We will work closely with all interested parties to ensure smooth implementation and mitigate any adverse effects such as consumer confusion.

Comment: As also discussed in the preamble, many commenters supported this proposal, agreeing that it would help limit CSR forfeiture and increase the likelihood that more consumers would be enrolled in more generous coverage without additional cost. One commenter expressed support but suggested that the policy could be limited in its impact for individuals and families with household incomes above 150 percent FPL because of the difference in bronze and silver plans' monthly premiums. Commenters also raised concerns that auto re-enrolling consumers into a different plan for the coming year could disrupt consumers' provider network, prescription drug availability, and HSA eligibility that had informed their original choice of plan selection.

Response: We agree that this policy will help to prevent CSR forfeiture. Also, we agree with the comment that most enrollees who Exchanges can crosswalk from a bronze to a silver plan under paragraph (j)(4) will be those who have access to a silver plan with a $0 monthly net premium because their household income does not exceed 150 percent of the FPL. Nevertheless, we believe that the importance of auto re-enrolling enrollees in a plan within the same product and with the same provider network that they would have if they were auto re-enrolled under § 155.335(j)(1) or (2) outweighs concerns that this will result in fewer bronze enrollees being crosswalked to a silver plan. In response to concerns that Exchanges will be shifting CSR eligible consumers auto re-enrolled from a bronze to a silver plan under paragraph (j)(4) into different benefits and provider networks, we note that by making this change only for consumers who have a

[334] Please see the preamble for § 155.335(j) at section III.B.6. for a full description of and explanation for these modifications.

[335] See § 155.335(j)(2), and *see* ''Plan Crosswalk'' on the QHP Certification Information and Guidance website at *https://www.qhpcertification.cms.gov/s/Plan%20Crosswalk* for more information on the Crosswalk Template.

[336] Based on internal CMS analysis, for the 2023 plan year, 86 percent of crosswalks to a different product with the same issuer had the same network ID and the same network type (that is, HMO, PPO, EPO).

[337] See 87 FR 78263.

plan in their same product with a network ID that matches that of their future year bronze plan, the policy ensures that consumers will not experience network changes that they would not otherwise experience had they been auto re-enrolled into their bronze plan. Also, we will perform additional research to ensure that we are able to provide appropriate support and technical assistance to enrollees who may have chosen a bronze plan HSA, and we encourage State Exchanges, agents and brokers, and enrollment assisters to do the same.

14. Coverage Effective Dates for Qualified Individuals Losing Other Minimum Essential Coverage (§ 155.420(b))

We are finalizing the amendment to paragraph (b)(2)(iv) to § 155.420 to provide earlier SEP coverage effective dates for qualifying individuals who attest to a future loss of MEC, such as coverage offered through an employer, Medicaid, CHIP, or Medicare, and select a plan between 60 days before such loss of MEC and the last day of the month preceding the month in which the loss of MEC occurs. Currently, the earliest start date for Exchange coverage when a qualifying individual attests to a future loss of MEC is the first day of the month following the date of loss of MEC, which may result in coverage gaps when consumers lose forms of MEC (other than Exchange coverage) mid-month. We believe that this change is necessary to ensure that qualifying individuals are able to seamlessly transition from other non-Exchange MEC to Exchange coverage as quickly as possible with minimal coverage gaps. As discussed earlier in preamble at section III.B.7.a., ensuring smooth and quick transitions into Exchange coverage will be especially critical during Medicaid unwinding when a large number of consumers are expected to lose their Medicaid or CHIP coverage and transition to Exchange coverage.

Based on our own analysis, for plan years 2019 through 2021, approximately 214,000 households seeking coverage on Exchanges using the Federal platform reported a future mid-month loss of MEC date and ultimately did not enroll in a QHP. In PY 2021, about 45,000 households attested to a future mid-month loss of coverage MEC date and did not enroll in QHP coverage. If these consumers had been given the opportunity for Exchange coverage to begin on the first of the month in which their prior mid-month loss of MEC coverage end date occurred, rather than having to wait weeks for their coverage to start, these consumers could have avoided a gap in coverage and could have received an additional month of APTC. Therefore, for consumers who report a future loss of MEC, especially those who reside in States that allow mid-month terminations for Medicaid or CHIP, we estimate that this change could increase APTC expenditures by approximately $161 million dollars per coverage year by allowing Exchange coverage to start the first of the month in which the mid-month loss of MEC occurs assuming a similar volume of consumers will choose to enroll in an Exchange QHP based on PY 2021 data. We estimated this amount by multiplying the number of consumers in PY 2021 who attested to a future loss of MEC and chose not to enroll (approximately 45,000) and multiplied this by average APTC (about $508 per month for PY 2021 and assuming an average enrollment of 7 months). However, the actual number could be lower, given that we are unable to estimate what proportion of consumers will still elect to not enroll in an Exchange QHP. We also anticipate additional costs for consumers whose monthly premium after APTC (if applicable) is greater than $0, as they would likely have to pay premiums for both MEC and Exchange coverage in the month over overlapping coverage, depending on the type of prior MEC involved. Conversely, our estimate may also be low because it does not account for the one additional month of coverage and APTC that consumers may receive if they would have already chosen to enroll in Exchange coverage under the existing policy, but may do so earlier under the new rule. We note that, to mitigate adverse selection and the related burden on issuers, we did not propose that Exchanges permit consumers to select a coverage date such as the first of the month following plan selection. We sought comment on this policy, specifically about any additional costs, benefits, or burdens on State Exchanges, issuers, and consumers as related to this policy. We also sought comment from issuers regarding any additional or remaining risk regarding mid-month coverage effective dates.

We did not receive any comments in response to the burden estimates for this policy. We are finalizing these estimates as proposed.

15. Special Rule for Loss of Medicaid or CHIP Coverage (§ 155.420(c))

We are finalizing the addition of paragraph (c)(6) to § 155.420 to provide qualifying individuals losing Medicaid or CHIP that is considered MEC in accordance with § 155.420(d)(1)(i), and who qualify for a special enrollment period, with up to 60 days before and up to 90 days after their loss of coverage to enroll in QHP coverage. In addition, if a State Medicaid Agency allows or provides for a Medicaid or CHIP reconsideration period greater than 90 days, then the Exchange in that State may elect to provide a qualified individual or their dependent(s) who is described in paragraph (d)(1)(i) of this section and whose loss of coverage is a loss of Medicaid or CHIP coverage additional time to select a QHP, up to the number of days provided for the applicable Medicaid or CHIP reconsideration period. We believe that this change is necessary to ensure that qualifying individuals are able to seamlessly transition from Medicaid or CHIP into Exchange coverage as quickly as possible with minimal coverage gaps.

Based on our own analysis, in plan year 2019, about 60,000 consumers seeking coverage on Exchanges using the Federal platform attested to a Medicaid or CHIP loss or denial between 60 to 90 days prior to submitting or updating a *HealthCare.gov* application. We estimate that this change to permit Exchanges to use a special rule to provide consumers losing Medicaid or CHIP with 90 days after their loss of Medicaid or CHIP to enroll in QHP coverage will increase APTC expenditures by approximately $98 million per year. This number may be slightly higher given the additional flexibilities for State Exchanges, but we are unable to estimate that because we do not know which State Exchanges may choose to implement this special rule earlier than January 1, 2024, or which State Exchanges operate in States whose State Medicaid Agency allows or provides for a Medicaid or CHIP reconsideration period greater than 90 days whereby the Exchange in that State may elect to provide more than 90 days to select a QHP under § 155.420(c)(6).

We did not receive any comments in response to the burden estimates for this policy. We are finalizing these estimates as proposed.

16. Plan Display Error Special Enrollment Periods (§ 155.420(d))

We anticipate that revisions to § 155.420(d)(12) will maintain current regulatory burden and cost on issuers. As discussed earlier in preamble at section III.B.7.d., these revisions will make necessary changes to the text of § 155.420(d)(12) to align the policy for granting SEPs to persons who are adversely affected by a plan display error with current plan display error SEP operations. This policy will have minimal operational impact, as interested parties such as issuers, States,

and the Exchanges on the Federal platform currently have the infrastructure to demonstrate that a material plan display error influenced a qualified individual's, enrollee's, or their dependents' enrollment in a QHP through the Exchange. This does not impose additional regulatory burden or costs because the revisions do not require the consumers, HHS, or issuers to conduct new or additional processes.

We did not receive any comments in response to the burden estimates for this policy. We are finalizing these estimates as proposed.

17. Termination of Exchange Enrollment or Coverage (§ 155.430)

We do not anticipate any burden related to the policy to expressly prohibit QHP issuers participating in Exchanges on the Federal platform from terminating coverage of dependent children before the end of the coverage year because the child has reached the maximum age at which issuers are required to make coverage available under Federal or State law, or the issuer's business rules. Because this prohibition has already been operationalized on the Exchanges on the Federal platform, we do not anticipate a financial impact to issuers or HHS. There may be some minor costs for State Exchanges that choose to implement this policy and have not previously done so, but we do not have adequate data to estimate these costs.

We did not receive any comments in response to the burden estimates for this policy. We are finalizing these estimates as proposed.

18. Improper Payment Pre-Testing and Assessment for State-Based Exchanges (§ 155.1500)

This policy will prepare HHS to implement the Payment Integrity Information Act of 2019 (PIIA) requirements for State Exchanges. As described in the preamble in this final rule, the PIIA requires that agencies measure the improper payments rate for programs susceptible to significant improper payments. We already undertake annual measurements for Medicare, Medicaid, FFEs, and SBE–FPs. This final rule will lay the groundwork to complete the Exchanges' measurement program by including State Exchanges and to enable HHS to estimate improper payment rates as mandated by statute.

This policy will test State Exchanges' readiness to provide the information necessary to measure the rate of improper payments. Even slight decreases in this rate will accrue large taxpayer savings. As discussed in section IV.J, the IPPTA incurs approximately $28,500 in annual costs per State Exchange for a total annual cost of $512,878 for all 18 State Exchanges. Nevertheless, we believe that the potential benefits of this regulatory action justify the present costs.

This policy will prepare HHS to implement the statutory requirement for measurement of improper payments for programs susceptible to significant improper payments. We have quantified the costs for this policy. Neither this IPPTA nor any follow-on program should affect transfers between parties.

We did not receive any comments in response to the burden estimates for this policy. We are finalizing these estimates as proposed.

19. FFE and SBE–FP User Fee Rates for the 2024 Benefit Year (§ 156.50)

We are finalizing an FFE user fee rate of 2.2 percent of monthly premiums for the 2024 benefit year, which is a decrease from the 2.75 percent FFE user fee rate finalized in the 2023 Payment Notice (87 FR 27289). We are also finalizing an SBE–FP user fee rate of 1.8 percent of monthly premium for the 2024 benefit year, which is a decrease from the 2.25 percent SBE–FP user fee rate finalized in the 2023 Payment Notice. Based on our estimated costs, enrollment (including anticipated transitions of States from the FFE and SBE–FP models to either the SBE–FP or State Exchange model, increased Open Enrollment numbers and anticipated Medicaid redeterminations), premiums for the 2024 benefit year, and user fee rates, we are estimating that FFE and SBE–FP user fee transfers from issuers to the Federal Government will be $404 million lower compared to those estimated for the prior benefit year. We also anticipate that the lower user fee rates may exert downward pressure on premiums.

We did not receive any comments in response to the burden estimates for this policy. We are finalizing these estimates as proposed.

20. Standardized Plans

a. Standardized Plan Options (§ 156.201)

At § 156.201, for PY 2024 and subsequent PYs, we are finalizing minor updates to our approach to standardized plan options. Specifically, in contrast to the policy finalized in the 2023 Payment Notice, we are finalizing, for PY 2024 and subsequent PYs, to no longer include a standardized plan option for the non-expanded bronze metal level. Accordingly, we are finalizing at new § 156.201(b) that for PY 2024 and subsequent PYs, FFE and SBE–FP issuers offering QHPs through the Exchanges must offer standardized QHP options designed by HHS at every product network type (as described in the definition of ''product'' at § 144.103), at every metal level except the non-expanded bronze level, and throughout every service area that they offer non-standardized QHP options.

As we explained in the proposed rule, we believe that maintaining the highest degree of continuity possible in the approach to standardized plan options minimizes the risk of disruption for a range of interested parties, including issuers, agents, brokers, States, and enrollees. We also explained that we believe that making major departures from the approach to standardized plan options in the 2023 Payment Notice could result in drastic changes in these plan designs that could potentially cause undue burden for these interested parties. Furthermore, we explained that if these standardized plan options vary significantly from year to year, those enrolled in these plans could experience unexpected financial harm if the cost-sharing for services they rely upon differs substantially from the previous year. Ultimately, we believe that consistency in standardized plan options is important to allow both issuers and enrollees to become accustomed to these plan designs.

Thus, similar to the approach taken in the 2023 Payment Notice, we are finalizing standardized plan options that continue to resemble the most popular QHP offerings that millions of consumers are already enrolled in. Accordingly, these standardized plan options are based on refreshed PY 2022 cost-sharing and enrollment data to ensure that these plans continue to reflect the most popular offerings in the Exchanges.

We are maintaining an approach to standardized plan options that is similar to that taken in the 2023 Payment Notice, such that issuers will continue to be able to utilize many existing benefit packages, networks, and formularies, including those paired with standardized plan options for PY 2023. Furthermore, since we are finalizing requirements that QHP issuers offer standardized plan options at every product network type, at every metal level except the non-expanded bronze metal level, and throughout every service area for which they also offer non-standardized plan options (but not for different product network types, metal levels, and service areas where they do not also offer non-standardized plan options), issuers will not be required to extend plan offerings

beyond service areas and metal levels in which they currently offer plans.

Furthermore, as discussed earlier in the preamble, we will continue to differentially display standardized plan options on *HealthCare.gov* per the existing authority at § 155.205(b)(1). Since we will continue to assume the burden for differentially displaying standardized plan options on *HealthCare.gov,* FFE and SBE–FP issuers will not be subject to this burden.

In addition, as noted in the preamble, we will continue enforcement of the standardized plan option display requirements for approved web-brokers and QHP issuers using a direct enrollment pathway to facilitate enrollment through an FFE or SBE–FP—including both the Classic DE and EDE Pathways—at §§ 155.220(c)(3)(i)(H) and 156.265(b)(3)(iv), respectively. We believe that continuing the enforcement of these differential display requirements will not require significant modification of these entities' platforms and non-Exchange websites, especially since the majority of this burden already occurred when the standardized plan option differential display requirements were first finalized in the 2018 Payment Notice [338] or when enforcement of these requirements resumed beginning with the PY 2023 open enrollment period.

Furthermore, since we will continue to allow these entities to submit requests to deviate from the manner in which standardized plan options are differentially displayed on *HealthCare.gov,* the burden for these entities will continue to be minimized. We intend to continue providing access to information on standardized plan options to web-brokers through the Health Insurance Marketplace Public Use Files (PUFs) and QHP Landscape file to further minimize burden. Specific burden estimates for these requirements can be found in the corresponding ICR sections for §§ 155.220 and 156.265 of the 2023 Payment Notice (87 FR 698 and 699 and 87 FR 27360 and 27361).

Finally, since we are not finalizing the proposed requirement for issuers to place all covered generic prescription drugs in the generic prescription drug cost-sharing tier and all covered brand drugs in the preferred or non-preferred brand prescription drug cost sharing tiers (or the specialty prescription drug tier, with an appropriate and non-discriminatory basis) in these standardized plan options, issuers of these plans will not be subject to this additional burden.

We did not receive any comments in response to the burden estimates for this policy. We are finalizing these estimates as proposed.

b. Non-Standardized Plan Option Limits (§ 156.202)

At § 156.202, we are finalizing limiting the number of non-standardized plan options that issuers of individual market medical QHPs can offer through the FFEs and SBE–FPs to four in PY 2024 and two in PY 2025 and subsequent plan years per product network type, metal level, and inclusion of dental and/or vision benefit coverage, in any service area.

By finalizing the proposed policy with modifications to increase the limit on the number of non-standardized plan options that issuers can offer to four instead of two for PY 2024, and to also factor the inclusion of dental and/or vision benefit coverage into this limit, we estimate (based on PY 2023 enrollment and plan offering data) that the weighted average number of non-standardized plan options available to each consumer will be reduced from approximately 89.5 in PY 2023 to 66.3 in PY 2024, while the weighted average total number of plans (which includes both standardized and non-standardized plan options) available to each consumer will be reduced from approximately 113.7 in PY 2023 to 90.5 in PY 2024.

We also note that phasing in the reduction in the number of non-standardized plan options that issuers can offer, beginning with four for PY 2024, will also significantly reduce the number of plan discontinuations and affected enrollees for PY 2024. Specifically, based on PY 2022 data, we originally estimated that a limit of two non-standardized plan options would result in the discontinuation of approximately 60,949 of a total 106,037 non-standardized plan option plan-county combinations (57.5 percent), and would affect approximately 2.72 million of the 10.21 million enrollees in the FFEs and SBE–FPs (26.6 percent). That said, under the limit of four non-standardized plan options we are finalizing for PY 2024, based on PY 2023 data, we estimate that approximately 17,532 of the total 101,453 non-standardized plan option plan-county combinations (17.3 percent) will be discontinued as a result of this limit, and approximately 0.81 million of the 12.2 million enrollees on the FFEs and SBE–FPs (6.6 percent) will be affected by these discontinuations in PY 2024. Finally, in terms of the impact on network availability, we estimate an average reduction of only 0.03 network IDs per issuer, product network type, metal level, and service area, meaning we anticipate network IDs will remain largely unaffected by this limit for PY 2024.

As discussed in the preamble to this rule, we note that we are unable to provide meaningful estimates at this time for the weighted average number of non-standardized plan options available to each consumer; the weighted average number of total plans available to each consumer; the number of plan-county discontinuations; the number of affected enrollees; and the average reduction of network IDs per issuer, product network type, metal level, and service area under the limit of two non-standardized plan options per issuer, product network type, metal level, inclusion of dental and/or vision benefit, and service area for PY 2025 and subsequent plan years.

This is because for these estimates to be meaningful, they would need to be based on plan offering and enrollment data for PY 2024, which will not be available until the end of the current QHP certification cycle for PY 2024 and the end of the 2024 OEP, respectively. We anticipate that the broader landscape of plan offerings as well as the composition of individual issuers' portfolios of plan offerings will undergo significant changes as a result of the limit of four non-standardized plan options in PY 2024, and that any estimates based on data sourced from a plan year before this limit is enacted would not be meaningfully predictive of the landscape of plan offerings or individual issuers' portfolios of plan offerings for a plan year after this limit is enacted.

Furthermore, as we discussed in the preamble to this rule, we note that in the 2025 Payment Notice proposed rule, we intend to propose an exceptions process, as well as the specific criteria and thresholds that would be included in this exceptions process, that would, if finalized, allow issuers to offer non-standardized plan options in excess of the limit of two for PY 2025 and subsequent plan years.

Regardless, we acknowledge that the termination of these non-standardized plan options would entail burden in several forms, such as by affecting issuers' balance of enrollment across plans, by affecting the premium rating for each of those plans, and by requiring issuers to send discontinuation notices for enrollees whose plans are being discontinued. We are unable to quantify this burden, as the costs of discontinuing plans, reallocating enrollment among existing plans, and

[338] These differential display requirements were first effective and enforced beginning with PY 2018. See 81 FR 94117 through 94118, 94148.

recalculating the premium rating for each of these plans after these discontinuations and enrollee reallocations vary considerably due to a range of factors, including the current number of plan offerings per issuer, the number of plans that would be discontinued per issuer, the number of enrollees in those discontinued plans that would have to be re-enrolled in a different plan, and the composition of these remaining plan offerings.

That said, we believe that the advantages of enacting these changes outweigh the disadvantages of doing so. Specifically, with plan proliferation continuing unabated for several years, consumers have had to select from among record numbers of available plan options. Having such high numbers of plan choices to select from makes it increasingly difficult for consumers, especially those with lower rates of health care literacy, to easily and meaningfully compare all available plan options.

This subsequently increases the risk of suboptimal plan selection and unexpected financial harm for those who can least afford it. Thus, although we acknowledge the burden imposed on issuers subsequent to the imposition of a limit of four non-standardized plan options in PY 2024 and two non-standardized plan options in PY 2025 and subsequent plan years, we believe these changes align with the original intent of the Exchanges—to facilitate a consumer-friendly experience for individuals looking to purchase health insurance. We believe this change will continue to benefit consumers on the Exchanges over numerous years. We further note that we intend to offer the necessary guidance and technical assistance to facilitate this transition, such as through the 2024 Letter to Issuers and QHP certification webinars.

Relatedly, although issuers will be required to select another QHP to which to crosswalk affected enrollees from discontinued non-standardized plan options, we note that the existing discontinuation notices and process as well as the current re-enrollment hierarchy and corresponding crosswalk process outlined at § 155.335(j) will accommodate crosswalking these affected enrollees, and that no additional modification to these processes or to this re-enrollment hierarchy will be required. Finally, we note that no additional action will be required on behalf of consumers to complete this crosswalking process.

Finally, we believe burden is further meaningfully reduced given that we are phasing in the reduction in the number of non-standardized plan options that issuers can offer, beginning with four in PY 2024, which significantly reduces the number of necessary discontinuations in PY 2024 and subsequently reduces the number of affected enrollees that will need to be crosswalked.

We explained in the proposed rule that we did not have sufficient data to estimate the costs associated with these changes. As such, we sought comment from interested parties regarding cost estimates and data sources.

We did not receive any comments in response to the burden estimates for this policy. We are finalizing these estimates as proposed.

21. QHP Rate and Benefit Information (§ 156.210)

a. Age on Effective Date for SADPs

We are finalizing standards related to the rate submission process for Exchange-certified SADPs during QHP certification. Specifically, we are finalizing modifications to the rate submission process to require issuers of Exchange-certified SADPs, whether they are sold on- or off-Exchange, to use age on effective date as the sole method to calculate an enrollee's age for rating and eligibility purposes beginning with Exchange certification in PY 2024. Requiring these issuers to use the age on effective date methodology for calculating an enrollee's age, and consequently removing the less common and more complex age calculation methods, will reduce potential consumer confusion and the burden placed on Exchange interested parties (including issuers, as well as Classic DE and EDE partners) by promoting operational efficiency.

This policy change reduces the risk of consumer harm and confusion since the age on effective date method allows consumers to more easily understand the rate they are charged. This policy also helps reduce enrollment blockers, which will improve the efficiency of the enrollment process and reduce the burden placed on Exchange interested parties (including issuers, as well as Classic DE and EDE partners). Therefore, this policy helps facilitate more informed enrollment decisions and enrollment satisfaction.

We also do not anticipate any negative financial impact as a result of this policy, given that it will be a small operational change. If anything, this policy has the potential to reduce financial burden on issuers and HHS, as removing the other age rating methods will reduce the added expense and slower development times that must account for test cases in the rating engine for the less commonly used and more complex methods.

Additionally, this policy change will not create any additional information submission burden, as it will apply to information that Exchange issuers already submit as part of the QHP certification process.

We did not receive any comments in response to the burden estimates for this policy. We are finalizing these estimates as proposed.

b. Guaranteed Rates for SADPs

We are finalizing standards related to the rate submission process for Exchange-certified SADPs during QHP certification. Specifically, we are finalizing modifications to the rate submission process to require issuers of Exchange-certified SADPs, whether they are sold on- or off-Exchange, to submit guaranteed rates beginning with Exchange certification in PY 2024.

Requiring guaranteed rates will reduce the risk of consumer harm by reducing the risk of incorrect APTC calculation for the pediatric dental EHB portion of premiums. Therefore, we believe that this policy change will support health equity by helping to ensure that low-income enrollees who qualify for APTC are charged the correct premium amount. Beyond reducing the potential for consumer financial harm, this policy will also reduce the burden placed on consumers because it will allow them to rely on the information they see on the issuer's website and not have to contact issuers for final rates after the QHP certification process.

We did not receive any comments in response to the burden estimates for this policy. We are finalizing these estimates as proposed.

22. Plan and Plan Variation Marketing Name Requirements for QHPs (§ 156.225)

We are finalizing the addition of a new paragraph (c) to § 156.225 as proposed, to require that QHP plan and plan variation [339] marketing names include correct information, without omission of material fact, and do not include content that is misleading. We will review plan and plan variation marketing names during the annual

[339] In practice, CMS and interested parties often use the term ''plan variants'' to refer to ''plan variations.'' Per § 156.400, plan variation means a zero-cost sharing plan variation, a limited cost sharing plan variation, or a silver plan variation. Issuers may choose to vary plan marketing name by the plan variant—for example, use one plan marketing name for a silver plan that meets the actuarial value (AV) requirements at § 156.140(b)(2), and a different name for that plan's equivalent that meets the AV requirements at § 156.420(a)(1), (2), or (3).

QHP certification process in close collaboration with State regulators in States with Exchanges on the Federal platform.

By providing standards that help ensure plan and plan variation marketing names are clear and accurate, we anticipate this policy will reduce burden on consumers and on those who help consumers to enroll in Exchange coverage because it will allow them to rely on information they see during the plan selection process. In addition, we believe that the policy will have an overall positive impact on other Exchange interested parties as well, by ensuring that the consumer education that plans use to compete in the individual health insurance market is clear and accurate. We acknowledge that the policy might require additional effort during the QHP certification process on the part of Exchange issuers to comply with new plan marketing name standards, but believe it will ultimately decrease issuer and State effort following QHP certification, and during and after the annual Open Enrollment Period, by reducing the number of plan and plan variation marketing name-related consumer complaints to triage and, in some cases, special enrollment periods to be provided.

Finally, we also believe that the policy will promote health equity by reducing the likelihood of QHP benefit misunderstanding and confusion that leads to less informed enrollment decisions, especially for consumers with low health literacy, which is disproportionately experienced among underserved communities and other vulnerable populations.

We sought comment on the burden that this policy would impose, and on the burden reduction it could provide. We also sought comment on how HHS can further alleviate any burden associated with this policy, such as through technical assistance to Exchange interested parties, including issuers and enrollment assisters.

We summarize and respond to public comments received regarding the impact of the policy below.

Comment: Many commenters supported the proposal and agreed that ensuring plan and plan variation marketing name accuracy would reduce burden on consumers, assisters, agents and brokers, and other stakeholders. Some commenters supported the policy but cautioned against imposing name requirements that were too detailed or restrictive, or that contradicted existing State requirements. A few commenters opposed the policy based on concerns that it would restrict issuers' ability to market unique characteristics of their plans.

Response: We respond to these public comments in the final rule preamble.

Comment: Several commenters recommended steps for CMS to take to reduce burden on issuers if this policy were finalized. One commenter requested that CMS delay the policy to 2025 because issuers would have already begun plan filings when the final rule is expected to be issued, and because marketing names are used in multiple materials, issuers would benefit from additional implementation time and more specific guidance regarding permitted naming practices to prevent having to revise consumer-facing materials. This commenter also suggested that this proposal be implemented prior to the proposed changes to the auto re-enrollment hierarchy to ensure that marketing names are first accurate, consistent, and understood by consumers, before some consumers are auto re-enrolled into a different plan than their current plan. Another commenter raised concerns about including additional requirements during the QHP certification process, stating that new requirements would add significant administrative burden during a time when issuers are working to implement several new standards and requirements.

Response: Given that the primary intent of this policy is to ensure that information in plan and plan variation marketing names is accurate and does not conflict with information included in other plan documents, we disagree that it is necessary or appropriate to delay it. In response to concerns about issuer burden, we expect that this rule, and the related requirements discussed in preamble, will permit the continued use of most plan and plan variation marketing names and that this will help mitigate burden on issuers. Further, the rule and related review process will likely result in improved stability in this area because it will allow us to work with issuers and States during the QHP Certification process to address marketing name errors prior to Open Enrollment, as opposed to addressing problems with and requiring changes to plan and plan variation marketing names based on consumer complaints during and after Open Enrollment. Over the past several years, the need to make changes to plan and plan variation marketing names after Open Enrollment to address incorrect or misleading information in marketing names has resulted in significant time and effort on the part of HHS and issuers. We expect that the requirement to make these corrections prior to Open Enrollment will result in a net reduction in burden, especially in cases where a marketing name error would otherwise have resulted in offering an SEP to enrollees whose plan selection may have been impacted by the incorrect or misleading marketing name information. The availability of accurate and clear marketing names during Open Enrollment will also reduce burden for consumers who would otherwise have to reassess their decisions based on information that was not clear when they enrolled.

For a discussion of why we do not plan to delay implementation of changes to the re-enrollment hierarchy, see the RIA section for annual eligibility redeterminations (§ 155.335(j)). We also note that as discussed in the preamble for this section, we will work with States to review plan and plan variation marketing names in advance of Open Enrollment, which will result in improved accuracy of marketing names prior to the auto re-enrollment process for PY 2024. Additionally, as we discussed in the proposed rule (87 FR 78309), we will proactively address issuer and State questions through existing outreach and education vehicles, including webinars, email blasts, and regularly scheduled meetings on individual health insurance market policy and operations.

Comment: Multiple commenters agreed that this policy would promote health equity by reducing the likelihood that consumers might misunderstand or be confused about QHP benefits based on information in marketing names. These commenters agreed that these challenges were especially burdensome for consumers with low health literacy, which is disproportionately experienced among low-income, underserved, and vulnerable populations.

Response: We agree with commenters and look forward to continuing to work with interested parties to advance health equity in the individual and small group health insurance markets.

23. Network Adequacy (§ 156.230)

HHS is finalizing the proposal to revise §§ 156.230 and 156.235 to require all QHP issuers, including SADP issuers, to utilize a contracted network of providers and comply with network adequacy standards at § 156.230 and ECP standards at § 156.235, subject to a limited exception for certain SADPs as discussed previously in this final rule. We acknowledge that SADP issuers that only offer plans that do not use a provider network and that want to be certified may initially face increased costs associated with developing contractual relationships with providers

or leveraging pre-existing networks associated with their other plans. However, studies have found that provider networks allow for insurer-negotiated prices and controlled (that is, reduced) costs in the form of reduced patient cost-sharing, premiums, and service price, as compared with such services obtained out of network.[340] [341] We expect any initial increased issuer costs to differ from the costs experienced once such provider contractual relationships have been established or pre-existing networks associated with their other plans have been leveraged. We requested comment on whether and how to extrapolate from literature on voluntary network formation for purposes of assessing impacts of this regulatory provision.

For SADPs that do not use a provider network, this policy will require these issuers to contract with providers in accordance with our existing network adequacy requirements or withdraw from the Exchange. The latter may create a burden for enrollees and QHP plans in the service area if no SADPs remain. However, we expect this burden to only affect a small number of consumers, given the overall small number of Exchange-certified SADPs that do not use a provider network on the FFEs, and we expect that a similarly small number of Exchange-certified SADPs that do not use a provider network would be affected on State Exchanges and SBE–FPs. As discussed further in Table 11 in the preamble for part 156, over the last few years, fewer than 100 counties on the FFEs have had SADPs without provider networks, and most of these counties had SADPs with provider network options available. For PY 2022, there were only 8 Exchange-certified SADPs without provider networks in the FFEs. Similarly, the number of States with these types of plans has decreased over time. At its highest, in 2014, 9 FFE States had Exchange-certified SADPs without provider networks. Since PY 2020, this number has dropped to 4 or fewer FFE States, with only 2 FFE States having this plan type in PYs 2022 and 2023. Additionally, Exchange-certified SADPs with provider networks are becoming more available in counties that previously only had no-network SADP options: for PYs 2022 and 2023, only 2 FFE States (Alaska and Montana) offer Exchange-certified SADPs without provider networks. For Montana, all counties offering this plan type also offer Exchange-certified SADPs with provider networks. For Alaska in PYs 2022 and 2023, 90 percent of counties with Exchange-certified SADPs without provider networks have no Exchange-certified SADPs with provider networks.

We anticipate approximately 2,200 enrollees will be affected by this proposal. Enrollees in SADPs that choose not to comply with this requirement will need to select a different plan for coverage, which may cause hardship if the enrollee cannot access assistance, requires culturally and linguistically appropriate support, and/or does not have an understanding of health insurance design and benefits. In the event service areas are left without SADPs due to the provider network requirement, health plans will have to amend their benefits to include the pediatric dental benefit EHB. This change may require costs for issuers to build the benefit and contract with providers.

As discussed previously in this final rule, these impacts will be mitigated, as we are finalizing a limited exception to allow SADPs to not use a provider network in areas where it is prohibitively difficult for the SADP issuer to establish a network of dental providers that complies with §§ 156.230 and 156.235 (we refer readers to section III.C.7 of the preamble of this final rule for further discussion of this exception).

Finally, we do not anticipate any impact as a result of this policy on health plans that do not use a network, given our understanding that no such plan is currently certified as a QHP by an Exchange, but we solicited comment to inform that understanding.

We did not receive any comments in response to the burden estimates for this policy. We are finalizing these estimates as proposed.

24. Essential Community Providers (§ 156.235)

We are finalizing the proposal to strengthen the ECP standards under § 156.235(a)(2)(i) and (b)(2)(i) by requiring QHPs to contract with at least a minimum percentage of available ECPs in each plan's service area within certain ECP categories, as specified by HHS. Specifically, we are requiring QHPs to contract with at least 35 percent of available FQHCs that qualify as ECPs in the plan's service area and at least 35 percent of available Family Planning Providers that qualify as ECPs in the plan's service area as proposed. We acknowledge that issuers whose provider networks do not currently include such a percentage of these provider types that qualify as ECPs may face increased costs associated with complying with the proposed policies. However, we do not expect this increase to be prohibitive. Based on data from PY 2023, it is likely that a majority of issuers will be able to meet or exceed the threshold requirements for FQHCs and Family Planning Providers without needing to contract with additional providers in these categories.

To illustrate, if these requirements had been in place for PY 2023, out of 137 QHP issuers on the FFEs, 76 percent would have been able to meet or exceed the 35 percent FQHC threshold, while 61 percent would have been able to meet or exceed the 35 percent Family Planning Provider threshold without contracting with additional providers. For SADP issuers, 84 percent would have been able to meet the 35 percent threshold requirement for FQHCs offering dental services without contracting with additional providers. In PY 2023, for medical QHPs, the mean and median ECP percentages for the FQHC category were 74 and 83 percent, respectively. For the Family Planning Providers category, the mean and median ECP percentages were 66 and 71 percent, respectively. For SADPs, the mean and median ECP percentages for the FQHC category were 61 and 64 percent, respectively.

We are also finalizing the proposal to strengthen the ECP standards under § 156.235(a)(2)(ii)(B) by establishing two additional stand-alone ECP categories—SUD Treatment Centers and Mental Health Facilities. We acknowledge challenges associated with a general shortage and uneven distribution of SUD Treatment Centers and mental health providers. However, the ACA requires that a QHP's network include ECPs where available. As such, the policy to require QHPs to offer a contract to at least one available SUD Treatment Center and one available Mental Health Facility in every county in the plan's service area does not unduly penalize issuers facing a lack of certain types of ECPs within a service area; meaning that if there are no provider types that map to a specified ECP category available within the respective county, the issuer is not penalized. Further, as outlined in prior Letters to Issuers, HHS prepares the applicable PY HHS ECP list that potential QHPs use to identify eligible ECP facilities. The HHS ECP list reflects the total supply of eligible providers

[340] Benson NM, Song Z. Prices And Cost Sharing For Psychotherapy In Network Versus Out Of Network In The United States. Health Aff (Millwood). 2020 Jul;39(7):1210–1218. *https://www.healthaffairs.org/doi/10.1377/hlthaff.2019.01468.*

[341] Song, Z., Johnson, W., Kennedy, K., Biniek, J. F., & Wallace, J. Out-of-network spending mostly declined in privately insured populations with a few notable exceptions from 2008 to 2016. Health Aff. 2020;39(6), 1032–1041. *https://www.healthaffairs.org/doi/full/10.1377/hlthaff.2019.01776.*

(that is, the denominator) from which an issuer may select for contracting to count toward satisfying the ECP standard. As a result, issuers are not disadvantaged if their service areas contain fewer ECPs. HHS anticipates that any QHP issuers falling short of the 35 percent threshold for PY 2024 could satisfy the standard by using ECP write-ins and justifications. As in previous years, if an issuer's application does not satisfy the ECP standard, the issuer will be required to include as part of its application for QHP certification a satisfactory justification.

We did not receive any comments in response to the burden estimates for these policies. We are finalizing these estimates as proposed.

25. Termination of Coverage or Enrollment for Qualified Individuals (§ 156.270)

We are finalizing an amendment to § 156.270(f) to add a timeliness standard to the requirement for QHP issuers operating in Exchanges on the Federal platform to send enrollees notice of payment delinquency. Specifically, we are revising § 156.270(f) to require such issuers to send notice of payment delinquency promptly and without undue delay, within 10 business days of the date the issuer should have discovered the delinquency. We anticipate that this policy will be beneficial to enrollees who become delinquent on premium payments by ensuring they are properly informed of their delinquency in time to avoid losing coverage. It may be especially beneficial to enrollees who are low income, who will be especially negatively impacted by disruptions in coverage. We expect some minimal costs to issuers associated with updating their internal processes to ensure compliance with the finalized timeliness standard, but do not have adequate data to estimate these costs.

We did not receive any comments in response to the burden estimates for this policy. We are finalizing these estimates as proposed.

26. Final Deadline for Reporting Enrollment and Payment Inaccuracies Discovered After the Initial 90-Day Reporting Window (§ 156.1210(c))

We are finalizing an amendment to § 156.1210(c) to remove the alternate deadline at § 156.1210(c)(2), which requires an issuer to describe all data inaccuracies identified in a payment and collection report by the date HHS notifies issuers that the HHS audit process with respect to the PY to which such inaccuracy relates has been completed, in order for these data inaccuracies to be eligible for resolution. We are retaining only the deadline at § 156.1210(c)(1), which requires that issuers describe all inaccuracies identified in a payment and collections report within 3 years of the end of the applicable PY to which the inaccuracy relates to be eligible to receive an adjustment to correct an underpayment of APTC or overpayment of user fees to HHS. Beginning with the 2020 plan year coverage, HHS will not pay additional APTC payments or reimburse user fee payments for FFE, SBE–FP, and State Exchange issuers for data inaccuracies reported after the 3-year deadline. For PYs 2015 through 2019, to be eligible for resolution under § 156.1210(b), an issuer must describe all inaccuracies identified in a payment and collections report before January 1, 2024. We anticipate that this change will result in a less operationally burdensome process for the identification and resolution of these data inaccuracies for issuers, State Exchanges, and HHS, and a slight reduction in associated burdens, such as resolution of data inaccuracies for discovered underpayments. However, we anticipate the impact will be minimal, if any, as issuers have several opportunities to submit data inaccuracies prior to this 3- year deadline. Therefore, we anticipate no significant financial impact for this policy.

We did not receive any comments in response to the burden estimates for this policy. We are finalizing these estimates as proposed.

27. Regulatory Review Cost Estimation

If regulations impose administrative costs on private entities, such as the time needed to read and interpret this final rule, we should estimate the cost associated with regulatory review. Due to the uncertainty involved with accurately quantifying the number of entities that will review the rule, we assumed that the total number of unique commenters on last year's final rule (465) will be the number of reviewers of this final rule. We acknowledge that this assumption may understate or overstate the costs of reviewing this rule. It is possible that not all commenters reviewed last year's rule in detail, and it is also possible that some reviewers chose not to comment on the proposed rule. For these reasons, we thought that the number of past commenters will be a fair estimate of the number of reviewers of this rule. We welcome any comments on the approach in estimating the number of entities which will review this proposed rule.

We also recognized that different types of entities are in many cases affected by mutually exclusive sections of this final rule, and therefore, for the purposes of our estimate we assume that each reviewer reads approximately 50 percent of the rule. We sought comments on this assumption.

Using the wage information ($57.61 per hour) from the Bureau of Labor Statistics (BLS) for medical and health service managers (Code 11–9111), we estimate that the cost of reviewing this rule is $115.22 per hour, including a 100 percent increase for other indirect costs.[342] Assuming an average reading speed of 250 words per minute, we estimate that it will take approximately 6.67 hours for the staff to review half of this final rule (no more than 100,000 words). For each entity that reviews the rule, the estimated cost is $768.13 (6.67 hours × $115.22). Therefore, we estimate that the total cost of reviewing this regulation is approximately $357,180 ($768.13 × 465).

D. Regulatory Alternatives Considered

For the inclusion or exclusion of the 2020 benefit year enrollee-level EDGE data in the recalibration of 2024 benefit year risk adjustment models, we considered a variety of alternative options that were detailed in the proposed rule (87 FR 78216 through 78218). The first option considered was to maintain current policy, recalibrating the risk adjustment models using 2018, 2019, and 2020 enrollee-level EDGE data (without any adjustment). The second option involved using 2018, 2019, and 2020 enrollee-level EDGE data, but assigning a lower weight to the 2020 data. The third option we considered would utilize 4 years of enrollee-level EDGE data, instead of three, to recalibrate the risk adjustment models using 2017, 2018, 2019, and 2020 data. The fourth option, which was the proposed option, would determine coefficients for the 2024 benefit year based on a blend of separately solved coefficients from the 2018, 2019, and 2020 benefit years of enrollee-level EDGE recalibration data except for the coefficients for the adult age-sex factors, which would instead be based on a blend of separately solved coefficients from only the 2018 and 2019 benefit year enrollee-level EDGE recalibration. The fifth option would exclude the 2020 enrollee-level EDGE data and use the 2017, 2018, and 2019 enrollee-level EDGE data in recalibration for the 2024 benefit year or to use the final 2023 models as the 2024 risk adjustment models. The sixth and final option we considered would use 2 years of enrollee-level EDGE data for 2024

[342] *https://www.bls.gov/oes/current/oes_nat.htm.*

benefit year recalibration—only 2018 and 2019 data.

Our analyses found that the 2019 and 2020 enrollee-level EDGE recalibration data were largely comparable, however, there were observed anomalous decreases in the unconstrained age-sex coefficients for the 2020 enrollee-level EDGE. Specifically, whether a coefficient increased or decreased between the 2019 and 2020 enrollee-level EDGE data seemed to be related to the age and sex values for the age-sex factor, with older female enrollees being observed to have a greater likelihood of a decrease in their age-sex factor coefficient than other age and sex groups. However, we have noted that the magnitude of these coefficient changes is within the range of year-to-year changes that we have previously observed. Additionally, we agree with commenters to the proposed rule that removing only the 2020 enrollee-level EDGE data set age-sex factors from the blending of the coefficients may have disadvantages in that all coefficients in the model are interrelated and the removal of a subset of coefficients from blending as described in the proposed option 4 would not address any related coefficients that remained in the blending step. Therefore, although option 1 will not address the identified anomalous trend in the direction of changes to the age-sex factors, the small magnitude of the changes and the disadvantages of the proposed option have resulted in our decision to finalize option 1 in lieu of the proposed option. As such, we will maintain current policy, recalibrating the risk adjustment models using 2018, 2019, and 2020 enrollee-level EDGE data (without any adjustment).

We continue to believe the other options we considered are less appropriate than either the proposed option or the option finalized in this rule. For example, the second option we considered in the proposed rule represented a compromise between those who wish to include 2020 enrollee-level EDGE data in model recalibration and those who wish to exclude 2020 data, by capturing the utilization and spending patterns underlying the 2020 data while dampening its effects in the model. However, we are concerned this approach will require finding an appropriate weighting methodology, and we are further concerned that broadly dampening the effect of the 2020 enrollee-level EDGE data in the models defeats the purpose of adding the next available benefit year of data as part of model recalibration, because doing so will prevent the models from reflecting changes in utilization and cost of care that are unrelated to the impact of the COVID–19 PHE. We have similar concerns with option 3 and the inclusion of an additional prior benefit year (that is, 2017) to recalibrate the 2024 benefit year models to dampen the impact of the 2020 enrollee-level EDGE data. We do not believe that such a broad dampening is necessary because the anomalous coefficient changes identified from the 2020 enrollee-level EDGE data were largely limited to which adult model age-sex coefficients increased or decreased, and including an additional prior benefit year of data will dampen the impact of the 2020 data on other factors, preventing the models from reflecting changes in utilization and cost of care that are unrelated to the impact of the COVID–19 PHE.

We are similarly concerned about options 5 and 6, which involve the complete exclusion of 2020 enrollee-level EDGE data, because both of these options will result in reliance on data that may not be the most reflective data set of current utilization and spending trends. Furthermore, there are questions about whether there is a sufficient justification to completely exclude 2020 benefit year enrollee-level EDGE recalibration data in the recalibration of the risk adjustment models as our analysis showed 2020 enrollee-level EDGE data to be largely comparable to 2019 benefit year enrollee-level EDGE data. The sixth option has the same limitations and would also have the additional drawback of decreasing the stabilizing effect of using multiple years of data in model recalibration. More specifically, because this option would reduce the number of years of data used, a change in a coefficient occurring in just 1 year of the data that is actually included in recalibration (that is, the 2018 or 2019 benefit years of enrollee-level EDGE recalibration data) will have a greater impact on the risk adjustment model coefficients due to the increase in the reliance of the blended coefficients on the remaining 2 years of data.

We solicited comment on all of these alternatives for the use of the 2020 enrollee-level EDGE data in the 2024 benefit year risk adjustment model recalibration and responded to comments in the above preamble section entitled ''Data for Risk Adjustment Model Recalibration for 2024 Benefit Year''.

In developing the updated materiality threshold for HHS–RADV finalized in this rule, we sought to ensure the materiality threshold will ease the burden of annual audit requirements for smaller issuers of risk adjustment covered plans that do not materially impact risk. To do this, we considered the costs associated with hiring an initial validation auditor and submitting IVA results and the relative growth of issuers' total annual premiums Statewide and total BMM. We also evaluated the benefits of shifting to a threshold based on BMM rather than annual premiums, and we proposed changing the materiality threshold from $15 million in total annual premiums Statewide to 30,000 BMM Statewide. As an alternative option, we considered increasing the threshold to $17 million in total annual premiums Statewide and maintaining a cutoff based on premium dollars (instead of BMMs). However, we were concerned that a premium threshold will fail to capture small issuers overtime as PMPM premiums grow and will require more regular updates to the materiality threshold to maintain the current balance. The use of a BMM threshold avoids this issue. We invited comment on our proposed materiality threshold and on the potential alternative option to update the threshold to $17 million annual premiums Statewide for the benefit year being audited, and we also invited comment on the applicability date for when the new materiality threshold should begin to apply. Based on comments received and discussed in the preamble section titled ''Materiality Threshold for Risk Adjustment Data Validation,'' we are finalizing this provision as proposed and are using the new materiality threshold beginning with the 2022 benefit year HHS–RADV.

Regarding our proposal to require Exchanges to determine an enrollee as ineligible for APTC after having failed to file and reconcile for two consecutive tax years rather than after one tax year, we considered multiple alternatives. One alternative we considered was extending the current pause on FTR operations through plan year 2024, while HHS continued to examine the current FTR process, and explore ways in which the FTR process could promote continuity of coverage, while maintaining its critical program integrity function to ensure that only enrollees eligible for APTC continue to do so. Another alternative we considered was repealing the requirement under 45 CFR 155.305(f)(4) that a taxpayer(s) must file a Federal income tax return and reconcile their APTC for any tax year in which they or their tax household received APTC in order to continue their eligibility for APTC. However, we wanted to maintain the program integrity benefits of the FTR process, and believe there is still value in ensuring that only people who

are filing and reconciling remain eligible to receive APTC. Because of this, we amended our proposal and are finalizing as proposed a requirement that Exchanges end APTC only after two consecutive years of FTR status rather than ending APTC after a single year.

We considered two alternatives to accepting attestation to determine household income for households for which IRS does not return any data and expanding the amount of time to resolve income DMIs to meet the goal of increased consumer service and advancing health equity. We considered establishing a threshold when adjusting APTC following an income inconsistency period. Under this alternative, HHS would continue current operations but would not eliminate APTC eligibility completely if consumers are unable to provide sufficient documentation. While this alternative would require fewer changes to implement, the policy we are finalizing will create better outcomes for more consumers and decrease administrative burden. Additionally, we considered eliminating income DMIs for all consumers, including those for whom the Exchanges have IRS data, due to the large burden the income verification process places on consumers, but we found that the verification process was required for consumers with IRS data, and that consumers with IRS data would have their household income adjusted based on that data as opposed to those without IRS data who would lose eligibility for financial assistance.

In developing the proposal for re-enrollment hierarchy, we considered a variety of alternatives, including making no modifications. We also considered revising the policy, beginning in PY 2024, such that the Exchange could direct re-enrollment for income-based CSR-eligible enrollees from a bronze QHP to a silver QHP with a $0 net premium within the same product and QHP issuer, regardless if the enrollee's current plan is available. Under this alternative we considered revising the policy to allow the Exchange to ensure the enrollee's coverage retained a similar provider network throughout the Federal hierarchy for re-enrollment. While we believed this may slightly reduce operational complexity, we believed income-based CSR-eligible enrollees who have a *de minimis* or non-zero-dollar premium will still greatly benefit from having their coverage renewed into a silver CSR QHP with a lower or equivalent net premium and OOPC, by saving thousands in care costs.

We also considered revising the policy, beginning in PY 2024, such that the Exchange could: (1) direct re-enrollment, for income-based CSR-eligible enrollees, from a bronze QHP to a silver QHP with a lower or equivalent net premium and total OOPC within the same product and QHP issuer regardless if their current plan is available; (2) if their current plan is available and the enrollee is not income-based CSR eligible, re-enroll the enrollee's coverage in the enrollee's same plan; (3) if their current plan is not available and the enrollee is not income-based CSR eligible, direct re-enrollment to a plan at the same metal level that has a lower or equivalent net premium and total out-of-pocket cost compared to the enrollee's current QHP within the same product and QHP issuer; and (4) if a plan at the same metal level as their current QHP is not available and the enrollee is not income-based CSR eligible, direct re-enrollment to a QHP that is one metal level higher or lower than the enrollee's current QHP and has a lower or equivalent net premium and total OOPC compared to the enrollee's current QHP within the same product and issuer. Under this alternative, we considered revising the policy to allow the Exchange to ensure the enrollee's coverage retained a similar provider network throughout the Federal hierarchy for re-enrollment. While we believed this alternative would be beneficial for all enrollees, we understand this would pose a substantial operational burden and complexities for issuers and Exchanges to shift from the current policy to this revised alternative. We believe an incremental change will help issuers and Exchanges diligently and appropriately adjust their re-enrollment operations. We solicited comment on all aspects of the re-enrollment proposal at § 155.335(j) and responded to comments received in the associated preamble section. As discussed in that preamble section, we are finalizing this policy with minor modifications.

We considered taking no action related to the two technical corrections to the regulatory text at § 155.420(a)(4)(ii)(A) and (B). However, we believed these changes were necessary to make it explicitly clear that when a qualified individual or enrollee, or his or her dependent, experiences the special enrollment period triggering event, all members of a household may enroll in or change plans together in response to the event experienced by one member of the household. These finalized technical corrections should eliminate any confusion surrounding special enrollment period triggering events and may help Exchanges and other interested parties more effectively communicate and message rules that determine eligibility for special enrollment periods and how plan category limitations may apply for certain special enrollment periods as outlined under § 155.420(a).

We considered taking no action related to the revisions to § 155.420(b)(2)(iv), to provide Exchanges with more flexibility by allowing Exchanges the option to provide consumers with earlier coverage effective dates so that consumers are able to seamlessly transition from one form of coverage to Exchange coverage as quickly as possible with no coverage gaps. However, we believe that many consumers will benefit from this finalized change, especially those consumers whose States allow for mid-month terminations for Medicaid/CHIP or those consumers whose COBRA coverage ends mid-month and who report their coverage loss to the Exchange before it happens. We also considered allowing consumers the option to request a prospective coverage start date rather than the day following loss of MEC or COBRA coverage but we determined that this could introduce adverse selection as consumers could choose to delay enrolling in Exchange coverage and paying premiums until coverage was necessary. Finally, we also considered for consumers attesting to a past loss of MEC and who also report a mid-month coverage loss that Exchange coverage will be effective retroactively back to the first day after the prior coverage loss date. For example, if a consumer lost coverage on July 15, coverage will be effective retroactively back to July 16. We decided against this option as it would require a statutory change to allow for mid-month PTC for consumers losing MEC mid-month, in addition to being too operationally complex for both Exchanges and issuers to implement.

We considered taking no action related to the addition of new § 155.420(c)(6), to ensure that qualifying individuals losing Medicaid or CHIP coverage are able to seamlessly transition to Exchange coverage as quickly as possible with little to no coverage gaps. However, we believe that many consumers will benefit from this finalized change, especially during the period of unwinding the Medicaid continuous enrollment condition, where many consumers will need to seamlessly transition off Medicaid or CHIP and into Exchange coverage. We also considered whether this proposed change should be broadened to include

consumers in other disadvantaged groups such as those impacted by natural disasters or other exceptional circumstances, consumers losing Medicaid or CHIP that is not considered MEC, and consumers who are denied Medicaid or CHIP coverage. We decided not to include other groups, such as those residing in a Federal Emergency Management Agency (FEMA) declared disaster area, as current CMS guidance requires that an SEP be made available for an additional 60 days after the end of a FEMA declaration.[343] Additionally, for other exceptional circumstances, there is flexibility under § 155.420(d)(9) that we may offer impacted consumers more time to enroll under an SEP depending on the type of exceptional circumstance, like a national PHE such as COVID–19. Finally, regarding the population that is denied Medicaid or CHIP coverage in a new application for enrollment (instead of losing eligibility for existing Medicaid or CHIP coverage), we also considered whether to extend the SEP window length from 60 days to 90 days for the population that is denied Medicaid or CHIP; however, we chose not to extend the SEP window length for this population as there is no 90 day reconsideration period that needs alignment for consumers denied Medicaid or CHIP as there is for consumers who have lost eligibility for Medicaid or CHIP as described earlier in the preamble.

We considered taking no action regarding the modifications to § 155.430(b) to expressly prohibit issuers from terminating coverage for policy dependent enrollees because they reached the maximum allowable age mid-plan year. However, we believe it is important to provide clarity to issuers and consumers regarding this policy so that coverage is not prematurely disrupted, and we are therefore finalizing this policy as proposed.

In developing the IPPTA policies contained in this final rule (§ 155.1500), we requested to meet individually with each State Exchange that participated in the voluntary State engagement initiative in order to gather State-specific information regarding options for data collection that will impose the least burden on State Exchanges. Based on information provided by those State Exchanges that were able to participate in the meetings, we considered several data collection options but chose the option that provides State Exchanges with the greatest amount of control in aligning their source data to the requested data elements. In addition, the data collection option requests that the State Exchange provide no fewer than 10 sampled tax households that we proposed the State Exchange will identify based upon fulfilling the scenarios described in the preamble. An alternative option consisted of allowing the State Exchange to provide to HHS all of the source data in an unstructured format for the respective, sampled tax households. HHS, using its own resources, would then map the State Exchange source data to the required data elements that are necessary for performing the pre-testing and assessment. The mapping process would require consultative sessions with each State Exchange and a validation process to ensure the accurate mapping of the data. While the pre-testing and assessment data request form also entails a process to validate the data with the State Exchanges, the consultative process associated with this alternative data collection mechanism would entail more frequency and a higher level of intensity.

We invited comment on this data collection option and potential alternative data collection options. We did not receive any comments on the data collection alternative option. We are finalizing the data collection option as proposed.

For standardized plan options, we considered a range of options for the policy approach at § 156.201, such as modifying the methodology used to create the standardized plan options for PY 2024 and subsequent PYs. Specifically, we considered including more than four tiers of prescription drug cost-sharing in the standardized plan option formularies. We also considered lowering the deductibles in these plan designs and offsetting this increase in plan generosity by increasing cost-sharing amounts for several benefit categories. We also considered simultaneously maintaining the current cost-sharing structures and decreasing the deductibles for these plan designs, which would have increased the AVs of these plans to be at the ceiling of each AV de minimis range. Ultimately, we decided to maintain the AVs of these plans near the floor of each *de minimis* range by largely maintaining the cost-sharing structures and deductible values of the standardized plan options from PY 2023, as well as by increasing the maximum out-of-pocket (MOOP) values for these plan designs. We explained in the proposed rule that we believe this approach will strike the greatest balance in providing enhanced pre-deductible coverage while ensuring competitive premiums for these standardized plan options.

We invited comment on this proposed approach. As further discussed in the associated preamble section, we are finalizing the proposed standardized plan options policy, but with one modification. Specifically, we are not finalizing the proposed requirement for issuers to include all covered generic drugs in the generic prescription drug cost-sharing tier and all covered brand drugs in either the preferred brand or non-preferred brand prescription drug cost-sharing tiers (or the specialty tier, with an appropriate and non-discriminatory basis) in these standardized plan options, as is further discussed in the associated preamble section.

For non-standardized plan option limits, we considered a range of options for the policy approach at § 156.202. Specifically, we considered limiting the number of non-standardized plan options to three, two, or one per issuer, product network type, metal level, and service area combination. We also considered no longer permitting non-standardized plan options to be offered through the Exchanges.

We also considered redeploying the meaningful difference standard, which was previously codified at § 156.298, either in place of or in conjunction with imposing limits on the number of non-standardized plan options that issuers can offer through the Exchanges. In this scenario, we considered selecting from among several combinations of the criteria in the original version of the meaningful difference standard to determine whether plans are ''meaningfully different'' from one another.[344] Specifically, we considered using only a difference in deductible type (that is, integrated or separate medical and drug deductible), as well as a $1,000 difference in deductible to determine whether plans are ''meaningfully different'' from one another.

In the proposed rule, we proposed to add § 156.202 to limit the number of non-standardized plan options that issuers of QHPs can offer through Exchanges on the Federal platform (including SBE–FPs) to two non-

[343] *https://www.cms.gov/CCIIO/Resources/Regulations-and-Guidance/Downloads/8-9-natural-disaster-SEP.pdf.*

[344] Under the original meaningful difference standard, a plan was considered to be ''meaningfully different'' from other plans in the same product network type, metal level, and service area combination if the plan had at least one of the following characteristics: difference in network ID, difference in formulary ID, difference in MOOP type, difference in deductible, multiple in-network provider tiers rather than only one, a difference of $500 or more in MOOP, a difference of $250 or more in deductible, or any difference in covered benefits.

standardized plan options per product network type (as described in the definition of ''product'' at § 144.103) and metal level (excluding catastrophic plans), in any service area, for PY 2024 and beyond, as a condition of QHP certification. We explained that we believed this would be the most effective mechanism to reduce the risk of plan choice overload, streamline the plan selection process, and enhance choice architecture for consumers on the Exchanges.

We invited comment on this proposed approach. As discussed further in the associated preamble section of this final rule, we are finalizing this policy with a modification. Specifically, we are finalizing a phased in approach to limiting the number of non-standardized plan options such that a QHP issuer in an FFE or SBE–FP in PY 2024 is limited to offering four non-standardized plan options per product network type, as the term is described in the definition of ''product'' at § 144.103, metal level (excluding catastrophic plans), and inclusion of dental and/or vision benefit coverage, in any service area. For PY 2025 and subsequent plan years, a QHP issuer in an FFE or SBE–FP is limited to offering two non-standardized plan options per product network type, as the term is described in the definition of ''product'' at § 144.103, metal level (excluding catastrophic plans), and inclusion of dental and/or vision benefit coverage, in any service area.

We believe this policy strikes an appropriate balance in reducing the risk of plan choice overload and preserving a sufficient degree of consumer choice. As we explain in the corresponding section of the preamble to this final rule, we believe that permitting additional variations specifically for non-standardized plan options with the inclusion of dental or vision benefit coverage—instead of, for example, permitting additional variation for any single change in the product package, however small—decreases the likelihood that these limits will be circumvented.

For plan and plan variation marketing names, we considered issuing sub-regulatory guidance in lieu of rulemaking to require that marketing names include correct information, without omission of material fact, and not include content that is misleading. However, as explained in the proposed rule, given the important role that plan and plan variation marketing names play in facilitating plan competition through consumer education on Exchanges, we proposed this requirement in regulation to allow interested parties the opportunity to comment. As discussed in that preamble section, we are finalizing this policy as proposed.

We considered leaving the ECP provider participation threshold and major ECP categories unchanged from PY 2023, but elected to propose these changes to ECP policy in an effort to increase access to care, particularly mental health care and SUD treatment, for low-income and medically underserved consumers. In the proposed rule, we invited comment on these proposed changes and respond to those comments in the associated preamble section of this final rule. As discussed in that preamble section, we are finalizing these changes as proposed.

We considered not proposing to require all QHP issuers, including SADPs, to utilize a contracted network of providers, but elected to propose this change to network adequacy policy in an effort to ensure that consumers have access to insurer-negotiated prices and reduced costs in the form of reduced cost-sharing, premiums, and service price, as compared with cost-sharing, premiums, and service prices obtained from plans with no network of contracted providers. In the proposed rule, we invited comment on this proposal and respond to those comments in the associated preamble section of this final rule. As discussed in that preamble section, we are finalizing this policy but providing a limited exception to allow SADPs to not use a provider network in areas where it is prohibitively difficult for the SADP issuer to establish a network of dental providers that complies with §§ 156.230 and 156.235 (we refer readers to section III.C.7 of the preamble of this final rule for further discussion of this exception).

We considered not proposing an amendment to § 156.270(f) to add a timeliness standard to the requirement for QHP issuers to send enrollees notices of payment delinquency. However, as we stated in the proposed rule, because there is currently no timeliness standard for delinquency notices, we are concerned that there is a risk that enrollees may not receive sufficient notice of their delinquency to avoid termination of coverage. We also considered proposing requirements on how much advance notice issuers must provide on premium bills after coverage is effectuated, but declined to propose such a regulation, determining that our focus on delinquency notice timeliness will have the desired impact without creating potential conflicts with the existing pattern of State rules and issuer practices that have long applied in the individual market. As discussed in the associated preamble section of this final rule, we are finalizing this timeliness standard with modifications, such that beginning in PY 2024, QHP issuers in Exchanges operating on the Federal platform will be required to send notices of payment delinquency promptly and without undue delay, within 10 business days of the date the issuer should have discovered the delinquency.

E. Regulatory Flexibility Act (RFA)

The RFA requires agencies to analyze options for regulatory relief of small entities, if a rule has a significant impact on a substantial number of small entities. For purposes of the RFA, we estimate that small businesses, nonprofit organizations, and small governmental jurisdictions are small entities as that term is used in the RFA. The great majority of hospitals and most other health care providers and suppliers are small entities, either by being nonprofit organizations or by meeting the SBA definition of a small business (having revenues of less than $8.0 million to $41.5 million in any 1 year). Individuals and States are not included in the definition of a small entity.

For purposes of the RFA, we believe that health insurance issuers and group health plans will be classified under the North American Industry Classification System (NAICS) code 524114 (Direct Health and Medical Insurance Carriers). According to SBA size standards, entities with average annual receipts of $41.5 million or less will be considered small entities for these NAICS codes. Issuers could possibly be classified in 621491 (HMO Medical Centers) and, if this is the case, the SBA size standard will be $35 million or less.[345] We believe that few, if any, insurance companies underwriting comprehensive health insurance policies (in contrast, for example, to travel insurance policies or dental discount policies) fall below these size thresholds. Based on data from MLR annual report submissions for the 2021 MLR reporting year, approximately 78 out of 480 issuers of health insurance coverage nationwide had total premium revenue of $41.5 million or less.[346] This estimate may overstate the actual number of small health insurance issuers that may be affected, since over 76 percent of these small issuers belong to larger holding groups, and many, if not all, of these

[345] *https://www.sba.gov/document/support--table-size-standards.*

[346] Available at *https://www.cms.gov/CCIIO/Resources/Data-Resources/mlr.html.*

small companies are likely to have non-health lines of business that will result in their revenues exceeding $41.5 million.

In this final rule, we are finalizing standards for the risk adjustment and HHS–RADV programs, which are intended to stabilize premiums and reduce incentives for issuers to avoid higher-risk enrollees. Because we believe that insurance firms offering comprehensive health insurance policies generally exceed the size thresholds for ''small entities'' established by the SBA, we did not believe that an initial regulatory flexibility analysis is required for such firms and therefore do not believe a final regulatory flexibility analysis is required. Furthermore, the proposals related to IPPTA at §§ 155.1500–155.1515 will affect only State Exchanges. As State governments do not constitute small entities under the statutory definition, and as all State Exchanges have revenues exceeding $5 million, an impact analysis for these provisions is not required under the RFA.

As its measure of significant economic impact on a substantial number of small entities, HHS uses a change in revenue of more than 3 to 5 percent. We do not believe that this threshold will be reached by the requirements in this final rule. Therefore, the Secretary has certified that this final rule will not have a significant economic impact on a substantial number of small entities.

In addition, section 1102(b) of the Act requires us to prepare a regulatory impact analysis if a rule may have a significant impact on the operations of a substantial number of small rural hospitals. This analysis must conform to the provisions of section 603 of the RFA. For purposes of section 1102(b) of the Act, we define a small rural hospital as a hospital that is located outside of a metropolitan statistical area and has fewer than 100 beds. While this rule is not subject to section 1102 of the Act, we have determined that this rule will not affect small rural hospitals. Therefore, the Secretary has certified that this final rule will not have a significant impact on the operations of a substantial number of small rural hospitals.

F. Unfunded Mandates Reform Act (UMRA)

Section 202 of the Unfunded Mandates Reform Act of 1995 (UMRA) also requires that agencies assess anticipated costs and benefits before issuing any rule whose mandates require spending in any 1 year of $100 million in 1995 dollars, updated annually for inflation. In 2023, that threshold is approximately $177 million. Although we have not been able to quantify all costs, we expect that the combined impact on State, local, or Tribal governments and the private sector does not meet the UMRA definition of unfunded mandate.

G. Federalism

Executive Order 13132 establishes certain requirements that an agency must meet when it promulgates a proposed rule (and subsequent final rule) that imposes substantial direct requirement costs on State and local governments, preempts State law, or otherwise has federalism implications.

In compliance with the requirement of E.O. 13132 that agencies examine closely any policies that may have federalism implications or limit the policy making discretion of the States, we have engaged in efforts to consult with and work cooperatively with affected States, including participating in conference calls with and attending conferences of the NAIC, and consulting with State insurance officials on an individual basis.

While developing this rule, we attempted to balance the States' interests in regulating health insurance issuers with the need to ensure market stability. By doing so, we complied with the requirements of E.O. 13132.

Because States have flexibility in designing their Exchange and Exchange-related programs, State decisions will ultimately influence both administrative expenses and overall premiums. States are not required to establish an Exchange or risk adjustment program. For States that elected previously to operate an Exchange, those States had the opportunity to use funds under Exchange Planning and Establishment Grants to fund the development of data. Accordingly, some of the initial cost of creating programs was funded by Exchange Planning and Establishment Grants. After establishment, Exchanges must be financially self-sustaining, with revenue sources at the discretion of the State. Current State Exchanges charge user fees to issuers.

In our view, while this final rule will not impose substantial direct requirement costs on State and local governments, this regulation has federalism implications due to potential direct effects on the distribution of power and responsibilities among the State and Federal Governments relating to determining standards relating to health insurance that is offered in the individual and small group markets. For example, the repeal of the ability for States to request a reduction in risk adjustment State transfers may have federalism implications, but they are mitigated because States have the option to operate their own Exchange and risk adjustment program if they believe the HHS risk adjustment methodology does not account for State-specific factors unique to the State's markets.

As previously noted, the policies in this rule related to IPPTA will impose a minimal unfunded mandate on State Exchanges to supply data for the improper payment calculation. Accordingly, E.O. 13132 does not apply to this section of the final rule. In addition, statute requires HHS to determine the amount and rate of improper payments. Finally, States have the option to choose an FFE or SBE–FP, each of which place different Federal burdens on the State. As the IPPTA section of this final rule should not conflict with State law, HHS does not anticipate any preemption of State law. We invited State Exchanges to submit comments on this section of the proposed rule if they believe it will conflict with State law and did not receive any such comments.

In addition, we believe this final rule does have federalism implications due to the finalized policy that Exchanges offer earlier effective dates for consumers attesting to future mid-month coverage losses. However, the federalism implications are mitigated as Exchanges will have the flexibility to continue offering the current coverage effective dates as described at § 155.420(b)(2)(iv) or the new finalized earlier effective dates for consumers attesting to a future loss of MEC as described earlier in preamble. In addition, through the cross-references in § 147.104(b)(5), the new earlier coverage effective dates for consumers attesting to a future loss of MEC will be applicable market-wide at the option of the applicable State authority.

Additionally, we believe this final rule does have federalism implications due to the finalized policy that Exchanges provide consumers losing Medicaid or CHIP with a 90-day special enrollment period window to enroll in an Exchange QHP rather than the current 60-day window. However, the federalism implications are mitigated as Exchanges will have the flexibility to decide whether to continue providing 60 days before or 60 days after for consumers losing Medicaid or CHIP to enroll in a QHP plan as described at § 155.420(c)(1) or to implement the new special rule providing consumers with 60 days before or 90 days after their loss of Medicaid or CHIP to enroll in QHP coverage. State Exchanges will also have

additional flexibility to implement this special rule earlier than January 1, 2024, if they so choose, and are permitted to offer a longer attestation window up to the number of days provided for the applicable Medicaid or CHIP reconsideration period, if the State Medicaid agency allows or provides for a Medicaid or CHIP reconsideration period greater than 90 days.

H. Congressional Review Act

This final rule is subject to the Congressional Review Act provisions of the Small Business Regulatory Enforcement Fairness Act of 1996 (5 U.S.C. 801, *et seq.*), which specifies that before a rule can take effect, the Federal agency promulgating the rule shall submit to each House of the Congress and to the Comptroller General a report containing a copy of the rule along with other specified information. The Office of Information and Regulatory Affairs in OMB has determined that this final rule is a ''major rule'' as that term is defined in 5 U.S.C. 804(2), because it is likely to result in an annual effect on the economy of $100 million or more.

Chiquita Brooks-LaSure, Administrator of the Centers for Medicare & Medicaid Services, approved this document on April 12, 2023.

List of Subjects

45 CFR Part 153

Administrative practice and procedure, Health care, Health insurance, Health records, Intergovernmental relations, Organization and functions (Government agencies), Reporting and recordkeeping requirements.

45 CFR Part 155

Administrative practice and procedure, Advertising, Brokers, Conflict of interests, Consumer protection, Grants administration, Grant programs-health, Health care, Health insurance, Health maintenance organizations (HMO), Health records, Hospitals, Indians, Individuals with disabilities, Intergovernmental relations, Loan programs-health, Medicaid, Organization and functions (Government agencies), Public assistance programs, Reporting and recordkeeping requirements, Technical assistance, Women, Youth.

45 CFR Part 156

Administrative practice and procedure, Advertising, Advisory committees, Brokers, Conflict of interests, Consumer protection, Grant programs-health, Grants administration, Health care, Health insurance, Health maintenance organization (HMO), Health records, Hospitals, Indians, Individuals with disabilities, Loan programs-health, Medicaid, Organization and functions (Government agencies), Public assistance programs, Reporting and recordkeeping requirements, State and local governments, Sunshine Act, Technical assistance, Women, Youth.

For the reasons set forth in the preamble, under the authority at 5 U.S.C. 301, the Department of Health and Human Services amends 45 CFR subtitle A, subchapter B, as set forth below.

PART 153—STANDARDS RELATED TO REINSURANCE, RISK CORRIDORS, AND RISK ADJUSTMENT UNDER THE AFFORDABLE CARE ACT

■ 1. The authority citation for part 153 continues to read as follows:

Authority: 42 U.S.C. 18031, 18041, and 18061 through 18063.

■ 2. Section 153.320 is amended by revising paragraphs (d) introductory text, (d)(1)(iv), and (d)(4)(i)(B) to read as follows:

§ 153.320 Federally certified risk adjustment methodology.

* * * * *

(d) *State flexibility to request reductions to transfers.* For the 2020 through 2023 benefit years, States can request to reduce risk adjustment transfers in the State's individual catastrophic, individual non-catastrophic, small group, or merged market risk pool by up to 50 percent in States where HHS operates the risk adjustment program. For the 2024 benefit year only, only prior participants, as defined in paragraph (d)(5) of this section, may request to reduce risk adjustment transfers in the State's individual catastrophic, individual non-catastrophic, small group, or merged market risk pool by up to 50 percent in States where HHS operates the risk adjustment program.

(1) * * *

(i) * * *

(iv) For the 2024 benefit year only, a justification for the requested reduction demonstrating the requested reduction would have *de minimis* impact on the necessary premium increase to cover the transfers for issuers that would receive reduced transfer payments.

* * * * *

(4) * * *

(i) * * *

(B) For the 2024 benefit year only, that the requested reduction would have *de minimis* impact on the necessary premium increase to cover the transfers for issuers that would receive reduced transfer payments.

* * * * *

■ 3. Section 153.630 is amended by—

■ a. Revising paragraph (d)(2);

■ b. Redesignating paragraph (d)(3) as paragraph (d)(4); and

■ c. Adding new paragraph (d)(3).

The revision and addition read as follows:

§ 153.630 Data validation requirements when HHS operates risk adjustment.

* * * * *

(d) * * *

(2) Within 15 calendar days of the notification of the findings of a second validation audit (if applicable) by HHS, in the manner set forth by HHS, an issuer must confirm the findings of the second validation audit (if applicable), or file a discrepancy report to dispute the findings of a second validation audit (if applicable).

(3) Within 30 calendar days of the notification by HHS of the calculation of a risk score error rate, in the manner set forth by HHS, an issuer must confirm the calculation of the risk score error rate as a result of risk adjustment data validation, or file a discrepancy report to dispute the calculation of a risk score error rate as a result of risk adjustment data validation.

* * * * *

■ 4. Section 153.710 is amended by revising paragraphs (e) and (h)(1) introductory text to read as follows:

§ 153.710 Data requirements.

* * * * *

(e) *Materiality threshold.* HHS will consider a discrepancy reported under paragraph (d)(2) of this section to be material if the amount in dispute is equal to or exceeds $100,000 or 1 percent of the total estimated transfer amount in the applicable State market risk pool, whichever is less.

* * * * *

(h) * * *

(1) Notwithstanding any discrepancy report made under paragraph (d)(2) of this section, any discrepancy filed under § 153.630(d)(2) or (3), or any request for reconsideration under § 156.1220(a) of this subchapter with respect to any risk adjustment payment or charge, including an assessment of risk adjustment user fees and risk adjustment data validation adjustments; reinsurance payment; cost-sharing reduction payment or charge; or risk corridors payment or charge, unless the dispute has been resolved, an issuer must report, for purposes of the risk

corridors and medical loss ratio (MLR) programs:

* * * * *

PART 155—EXCHANGE ESTABLISHMENT STANDARDS AND OTHER RELATED STANDARDS UNDER THE AFFORDABLE CARE ACT

■ 5. The authority citation for part 155 continues to read as follows:

Authority: 42 U.S.C. 18021–18024, 18031–18033, 18041–18042, 18051, 18054, 18071, and 18081–18083.

■ 6. Section 155.106 is amended by revising paragraphs (a)(3) and (c)(3) to read as follows:

§ 155.106 Election to operate an Exchange after 2014.

(a) * * *

(3) Have in effect an approved, or conditionally approved, Exchange Blueprint and operational readiness assessment prior to the date on which the Exchange would begin open enrollment as a State Exchange;

* * * * *

(c) * * *

(3) Have in effect an approved, or conditionally approved, Exchange Blueprint and operational readiness assessment prior to the date on which the Exchange proposes to begin open enrollment as a State-based Exchanges on the Federal platform (SBE–FP), in accordance with HHS rules in this chapter, as a State Exchange utilizing the Federal platform;

* * * * *

§ 155.210 [Amended]

■ 7. Section 155.210 is amended by:

■ a. Removing the period at the end of paragraph (c)(6) and adding a semicolon in its place;

■ b. Adding the word ''or'' following the semicolon at the end of paragraph (d)(7); and

■ c. Removing and reserving paragraph (d)(8).

■ 8. Section 155.220 is amended by—

■ a. Revising paragraphs (g)(5)(i)(B), (h)(3), and (j)(2)(ii) introductory text;

■ b. Redesignating paragraphs (j)(2)(ii)(A) through (D) as paragraphs (j)(2)(ii)(B) through (E), respectively;

■ c. Adding new paragraph (j)(2)(ii)(A); and

■ d. Revising paragraph (j)(2)(iii).

The revisions and additions read as follows:

§ 155.220 Ability of States to permit agents and brokers and web-brokers to assist qualified individuals, qualified employers, or qualified employees enrolling QHPs.

* * * * *

(g) * * *

(5) * * *

(i) * * *

(B) The agent, broker, or web-broker may submit evidence in a form and manner to be specified by HHS, to rebut the allegation during this 90-day period. If the agent, broker, or web-broker submits such evidence during the suspension period, HHS will review the evidence and make a determination whether to lift the suspension within 45 calendar days of receipt of such evidence. If the rebuttal evidence does not persuade HHS to lift the suspension, or if the agent, broker, or web-broker fails to submit rebuttal evidence during the suspension period, HHS may terminate the agent's, broker's, or web-broker's agreements required under paragraph (d) of this section and under § 155.260(b) for cause under paragraph (g)(5)(ii) of this section.

* * * * *

(h) * * *

(3) *Notice of reconsideration decision.* The HHS reconsideration entity will provide the agent, broker, or web-broker with a written notice of the reconsideration decision within 60 calendar days of the date it receives the request for reconsideration. This decision will constitute HHS' final determination.

* * * * *

(j) * * *

(2) * * *

(ii) Provide the Federally-facilitated Exchanges with correct information, and document that eligibility application information has been reviewed by and confirmed to be accurate by the consumer, or the consumer's authorized representative designated in compliance with § 155.227, prior to the submission of information, under section 1411(b) of the Affordable Care Act, including but not limited to:

(A) Documenting that eligibility application information has been reviewed by and confirmed to be accurate by the consumer or the consumer's authorized representative must require the consumer or their authorized representative to take an action that produces a record that can be maintained by the individual or entity described in paragraph (j)(1) of this section and produced to confirm the consumer or their authorized representative has reviewed and confirmed the accuracy of the eligibility application information. Non-exhaustive examples of acceptable documentation include obtaining the signature of the consumer or their authorized representative (electronically or otherwise), verbal confirmation by the consumer or their authorized representative that is captured in an audio recording, a written response (electronic or otherwise) from the consumer or their authorized representative to a communication sent by the agent, broker, or web-broker, or other similar means or methods specified by HHS in guidance.

(*1*) The documentation required under paragraph (j)(2)(ii)(A) of this section must include the date the information was reviewed, the name of the consumer or their authorized representative, an explanation of the attestations at the end of the eligibility application, and the name of the assisting agent, broker, or web-broker.

(*2*) An individual or entity described in paragraph (j)(1) of this section must maintain the documentation described in paragraph (j)(2)(ii)(A) of this section for a minimum of ten years, and produce the documentation upon request in response to monitoring, audit, and enforcement activities conducted consistent with paragraphs (c)(5), (g), (h), and (k) of this section.

* * * * *

(iii) Obtain and document the receipt of consent of the consumer or their authorized representative designated in compliance with § 155.227, employer, or employee prior to assisting with or facilitating enrollment through a Federally-facilitated Exchange or assisting the individual in applying for advance payments of the premium tax credit and cost-sharing reductions for QHPs;

(A) Obtaining and documenting the receipt of consent must require the consumer, or the consumer's authorized representative designated in compliance with § 155.227, to take an action that produces a record that can be maintained and produced by an individual or entity described in paragraph (j)(1) of this section to confirm the consumer's or their authorized representative's consent has been provided. Non-exhaustive examples of acceptable documentation of consent include obtaining the signature of the consumer or their authorized representative (electronically or otherwise), verbal confirmation by the consumer or their authorized representative that is captured in an audio recording, a response from the consumer or their authorized representative to an electronic or other communication sent by the agent, broker, or web-broker, or other similar means or methods specified by HHS in guidance.

(B) The documentation required under paragraph (j)(2)(iii)(A) of this section must include a description of

the scope, purpose, and duration of the consent provided by the consumer or their authorized representative designated in compliance with § 155.227, the date consent was given, name of the consumer or their authorized representative, and the name of the agent, broker, web-broker, or agency being granted consent, as well as a process through which the consumer or their authorized representative may rescind the consent.

(C) An individual or entity described in paragraph (j)(1) of this section must maintain the documentation described in paragraph (j)(2)(iii)(A) of this section for a minimum of 10 years, and produce the documentation upon request in response to monitoring, audit, and enforcement activities conducted consistent with paragraphs (c)(5), (g), (h), and (k) of this section.

* * * * *

§ 155.225 [Amended]

■ 9. Section 155.225 is amended by:

■ a. Adding the word ''or'' following the semicolon in paragraph (g)(4); and

■ b. Removing and reserving paragraph (g)(5).

■ 10. Section 155.305 is amended by revising paragraphs (f)(1)(ii)(B) and (f)(4) to read as follows.

§ 155.305 Eligibility standards.

* * * * *

(f) * * *

(1) * * *

(ii) * * *

(B) Is not eligible for minimum essential coverage for the full calendar month for which advance payments of the premium tax credit would be paid, with the exception of coverage in the individual market, in accordance with 26 CFR 1.36B–2(a)(2) and (c).

* * * * *

(4) *Compliance with filing requirement.* The Exchange may not determine a tax filer eligible for advance payments of the premium tax credit (APTC) if HHS notifies the Exchange as part of the process described in § 155.320(c)(3) that APTC payments were made on behalf of either the tax filer or spouse, if the tax filer is a married couple, for two consecutive years for which tax data would be utilized for verification of household income and family size in accordance with § 155.320(c)(1)(i), and the tax filer or the tax filer's spouse did not comply with the requirement to file an income tax return for that year and for the previous year as required by 26 U.S.C. 6011, 6012, and in 26 CFR chapter I, and reconcile APTC for that period.

* * * * *

■ 11. Section 155.315 is amended by adding paragraph (f)(7) to read as follows:

§ 155.315 Verification process related to eligibility for enrollment in a QHP through the Exchange.

* * * * *

(f) * * *

(7) Must extend the period described in paragraph (f)(2)(ii) of this section by a period of 60 days for an applicant if the applicant is required to present satisfactory documentary evidence to verify household income.

* * * * *

■ 12. Section 155.320 is amended by adding paragraph (c)(5) to read as follows:

§ 155.320 Verification process related to eligibility for insurance affordability programs.

* * * * *

(c) * * *

(5) *Acceptance of attestation.* Notwithstanding any other requirement described in this paragraph (c) to the contrary, when the Exchange requests tax return data and family size from the Secretary of Treasury as described in paragraph (c)(1)(i)(A) of this section but no such data is returned for an applicant, the Exchange will accept that applicant's attestation of income and family size without further verification.

* * * * *

■ 13. Section 155.335 is amended by—

■ a. Revising paragraphs (j)(1) introductory text, (j)(1)(i) and (ii), (j)(1)(iii)(A) and (B), (j)(1)(iv), (j)(2), and (j)(3) introductory text; and

■ b. Adding paragraph (j)(4).

The revisions and addition read as follows:

§ 155.335 Annual eligibility redetermination.

* * * * *

(j) * * *

(1) The product under which the QHP in which the enrollee is enrolled remains available through the Exchange for renewal, consistent with § 147.106 of this subchapter, the Exchange will renew the enrollee in a QHP under that product, unless the enrollee terminates coverage, including termination of coverage in connection with voluntarily selecting a different QHP, in accordance with § 155.430, or unless otherwise provided in paragraph (j)(1)(iii)(A) or (j)(4) of this section, as follows:

(i) The Exchange will re-enroll the enrollee in the same plan as the enrollee's current QHP, unless the current QHP is not available through the Exchange;

(ii) If the enrollee's current QHP is not available through the Exchange, the Exchange will re-enroll the enrollee in a QHP within the same product at the same metal level as the enrollee's current QHP that has the most similar network compared to the enrollee's current QHP;

(iii) * * *

(A) The enrollee's current QHP is a silver level plan, the Exchange will re-enroll the enrollee in a silver level QHP under a different product offered by the same QHP issuer that is most similar to the enrollee's current product and that has the most similar network compared to the enrollee's current QHP. If no such silver level QHP is available for enrollment through the Exchange, the Exchange will re-enroll the enrollee in a QHP under the same product that is one metal level higher or lower than the enrollee's current QHP and that has the most similar network compared to the enrollee's current QHP; or

(B) The enrollee's current QHP is not a silver level plan, the Exchange will re-enroll the enrollee in a QHP under the same product that is one metal level higher or lower than the enrollee's current QHP and that has the most similar network compared to the enrollee's current QHP; or

(iv) If the enrollee's current QHP is not available through the Exchange and the enrollee's product no longer includes a QHP that is at the same metal level as, or one metal level higher or lower than, the enrollee's current QHP, the Exchange will re-enroll the enrollee in any other QHP offered under the product in which the enrollee's current QHP is offered in which the enrollee is eligible to enroll and that has the most similar network compared to the enrollee's current QHP.

(2) No plans under the product under which the QHP in which the enrollee is enrolled are available through the Exchange for renewal, consistent with § 147.106 of this subchapter, the Exchange will enroll the enrollee in a QHP under a different product offered by the same QHP issuer, to the extent permitted by applicable State law, unless the enrollee terminates coverage, including termination of coverage in connection with voluntarily selecting a different QHP, in accordance with § 155.430, as follows, except as provided in paragraph (j)(4) of this section.

(i) The Exchange will re-enroll the enrollee in a QHP at the same metal level as the enrollee's current QHP in the product offered by the same issuer that is the most similar to the enrollee's current product and that has the most

similar network compared to the enrollee's current QHP;

(ii) If the issuer does not offer another QHP at the same metal level as the enrollee's current QHP, the Exchange will re-enroll the enrollee in a QHP that is one metal level higher or lower than the enrollee's current QHP and that has the most similar network compared to the enrollee's current QHP in the product offered by the same issuer through the Exchange that is the most similar to the enrollee's current product; or

(iii) If the issuer does not offer another QHP through the Exchange at the same metal level as, or one metal level higher or lower than the enrollee's current QHP, the Exchange will re-enroll the enrollee in any other QHP offered by the same issuer in which the enrollee is eligible to enroll and that has the most similar network compared to the enrollee's current QHP in the product that is most similar to the enrollee's current product.

(3) No QHPs from the same issuer are available through the Exchange, the Exchange may enroll the enrollee in a QHP issued by a different issuer, to the extent permitted by applicable State law, unless the enrollee terminates coverage, including termination of coverage in connection with voluntarily selecting a different QHP, in accordance with § 155.430, as follows:

* * * * *

(4) The enrollee is determined upon annual redetermination eligible for cost-sharing reductions, in accordance with § 155.305(g), is currently enrolled in a bronze level QHP, and would be re-enrolled in a bronze level QHP under paragraph (j)(1) or (2) of this section, then to the extent permitted by applicable State law, unless the enrollee terminates coverage, including termination of coverage in connection with voluntarily selecting a different QHP, in accordance with § 155.430, at the option of the Exchange, the Exchange may re-enroll such enrollee in a silver level QHP within the same product, with the same provider network, and with a lower or equivalent premium after the application of advance payments of the premium tax credit as the bronze level QHP into which the Exchange would otherwise re-enroll the enrollee under paragraph (j)(1) or (2) of this section.

* * * * *

■ 14. Section 155.420 is amended by–

■ a. Revising paragraphs (a)(4)(ii)(A) and (B), (b)(2)(iv), and (c)(2);

■ b. Adding paragraph (c)(6);

■ c. Removing the heading from paragraph (d)(6); and

■ d. Revising paragraph (d)(12).

The revisions and addition read as follows:

§ 155.420 Special enrollment periods.

(a) * * *

(4) * * *

(ii) * * *

(A) If an enrollee or their dependents become newly eligible for cost-sharing reductions in accordance with paragraph (d)(6)(i) or (ii) of this section and the enrollee or their dependents are not enrolled in a silver-level QHP, the Exchange must allow the enrollee and their dependents to change to a silver-level QHP if they elect to change their QHP enrollment; or

(B) Beginning January 2022, if an enrollee or their dependents become newly ineligible for cost-sharing reductions in accordance with paragraph (d)(6)(i) or (ii) of this section and the enrollee or his or her dependents are enrolled in a silver-level QHP, the Exchange must allow the enrollee and their dependents to change to a QHP one metal level higher or lower if they elect to change their QHP enrollment;

* * * * *

(b) * * *

(2) * * *

(iv) If a qualified individual, enrollee, or dependent, as applicable, loses coverage as described in paragraph (d)(1) or (d)(6)(iii) of this section, or is enrolled in COBRA continuation coverage for which an employer is paying all or part of the premiums, or for which a government entity is providing subsidies, and the employer contributions or government subsidies completely cease as described in paragraph (d)(15) of this section, gains access to a new QHP as described in paragraph (d)(7) of this section, becomes newly eligible for enrollment in a QHP through the Exchange in accordance with § 155.305(a)(2) as described in paragraph (d)(3) of this section, becomes newly eligible for advance payments of the premium tax credit in conjunction with a permanent move as described in paragraph (d)(6)(iv) of this section, and if the plan selection is made on or before the day of the triggering event, the Exchange must ensure that the coverage effective date is the first day of the month following the date of the triggering event. If the plan selection is made after the date of the triggering event, the Exchange must ensure that coverage is effective in accordance with paragraph (b)(1) of this section or on the first day of the following month, at the option of the Exchange. Notwithstanding the requirements of this paragraph (b)(2)(iv) with respect to losses of coverage as described at paragraphs (d)(1), (d)(6)(iii), and (d)(15) of this section, at the option of the Exchange, if the plan selection is made on or before the last day of the month preceding the triggering event, the Exchange must ensure that the coverage effective date is the first day of the month in which the triggering event occurs.

* * * * *

(c) * * *

(2) *Advanced availability.* A qualified individual or their dependent who is described in paragraph (d)(1), (d)(6)(iii), or (d)(15) of this section has 60 days before and, unless the Exchange exercises the option in paragraph (c)(6) of this section, 60 days after the triggering event to select a QHP. At the option of the Exchange, a qualified individual or their dependent who is described in paragraph (d)(7) of this section; who is described in paragraph (d)(6)(iv) of this section becomes newly eligible for advance payments of the premium tax credit as a result of a permanent move to a new State; or who is described in paragraph (d)(3) of this section and becomes newly eligible for enrollment in a QHP through the Exchange because they newly satisfy the requirements under § 155.305(a)(2), has 60 days before or after the triggering event to select a QHP.

* * * * *

(6) *Special rule for individuals losing Medicaid or CHIP.* Beginning January 1, 2024, or earlier, at the option of the Exchange, a qualified individual or their dependent(s) who is described in paragraph (d)(1)(i) of this section and whose loss of coverage is a loss of Medicaid or CHIP coverage shall have 90 days after the triggering event to select a QHP. If a State Medicaid or CHIP Agency allows or provides for a Medicaid or CHIP reconsideration period greater than 90 days, the Exchange in that State may elect to provide a qualified individual or their dependent(s) who is described in paragraph (d)(1)(i) of this section and whose loss of coverage is a loss of Medicaid or CHIP coverage additional time to select a QHP, up to the number of days provided for the applicable Medicaid or CHIP reconsideration period.

* * * * *

(d) * * *

(12) The enrollment in a QHP through the Exchange was influenced by a material error related to plan benefits, service area, cost-sharing, or premium. A material error is one that is likely to have influenced a qualified individual's,

enrollee's, or their dependent's enrollment in a QHP.

* * * * *

■ 15. Section 155.430 is amended by adding paragraph (b)(3) to read as follows:

§ 155.430 Termination of Exchange enrollment or coverage.

* * * * *

(b) * * *

(3) *Prohibition of issuer-initiated terminations due to aging-off.* Exchanges on the Federal platform must, and State Exchanges using their own platform may, prohibit QHP issuers from terminating dependent coverage of a child before the end of the plan year in which the child attains age 26 (or, if higher, the maximum age a QHP issuer is required to make available dependent coverage of children under applicable State law or the issuer's business rules), on the basis of the child's age, unless otherwise permitted.

* * * * *

■ 16. Section 155.505 is amended by revising paragraph (g) to read as follows:

§ 155.505 General eligibility appeals requirements.

* * * * *

(g) *Review of Exchange eligibility appeal decisions.* Review of appeal decisions issued by an impartial official as described in § 155.535(c)(4) is available as follows:

(1) *Administrative review.* The Administrator may review an Exchange eligibility appeal decision as follows:

(i) *Request by a party to the appeal.* (A) Within 14 calendar days of the date of the Exchange eligibility appeal decision issued by an impartial official as described in § 155.535(c)(4), a party to the appeal may request review of the Exchange eligibility appeal decision by the CMS Administrator. Such a request may be made even if the CMS Administrator has already at their initiative declined review as described in paragraph (g)(1)(ii)(B)(*1*) of this section. If the CMS Administrator accepts that party's request for a review after having declined review, then the CMS Administrator's initial declination to review the eligibility appeal decision is void.

(B) Within 30 days of the date of the party's request for administrative review, the CMS Administrator must:

(*1*) Decline to review the Exchange eligibility appeal decision;

(*2*) Render a final decision as described in § 155.545(a)(1) based on their review of the eligibility appeal decision; or

(*3*) Choose to take no action on the request for review.

(C) The Exchange eligibility appeal decision of the impartial official as described in § 155.535(c)(4) is final as of the date of the impartial official's decision if the CMS Administrator declines the party's request for review or if the CMS Administrator does not take any action on the party's request for review by the end of the 30-day period described in paragraphs (g)(1)(i)(B)(*1*) and (*3*) of this section.

(ii) *Review at the discretion of the CMS Administrator.* (A) Within 14 calendar days of the date of the Exchange eligibility appeal decision issued by an impartial official as described in § 155.535(c)(4), the CMS Administrator may initiate a review of an eligibility appeal decision at their discretion.

(B) Within 30 days of the date the CMS Administrator initiates a review, the CMS Administrator may:

(*1*) Decline to review the Exchange eligibility appeal decision;

(*2*) Render a final decision as described in § 155.545(a)(1) based on their review of the eligibility appeal decision; or

(*3*) Choose to take no action on the Exchange eligibility appeal decision.

(C) The eligibility Exchange appeal decision of the impartial official as described in § 155.535(c)(4) is final as of the date of the Exchange eligibility appeal decision if the CMS Administrator declines to review the eligibility appeal decision or chooses to take no action by the end of the 30-day period described in paragraphs (g)(1)(i)(B)(*1*) and (*3*) of this section.

(iii) *Effective dates.* If a party requests a review of an Exchange eligibility appeal decision by the CMS Administrator or the CMS Administrator initiates a review of an Exchange eligibility appeal decision at their own discretion, the eligibility appeal decision is effective as follows:

(A) If an Exchange eligibility appeal decision is final pursuant to paragraphs (g)(1)(i)(C) and (g)(1)(ii)(C) in this section, the Exchange eligibility appeal decision of the impartial official as described in § 155.535(c)(4) is effective as of the date of the impartial official's decision.

(B) If the CMS Administrator renders a final decision after reviewing an Exchange eligibility appeal decision as described in paragraphs (g)(1)(i)(B)(*2*) and (g)(1)(ii)(B)(*2*) of this section, the CMS Administrator may choose to change the effective date of the Exchange eligibility appeal decision as described in § 155.545(a)(5).

(iv) *Informal resolution decision.* Informal resolution decisions as described in § 155.535(a)(4) are not subject to administrative review by the CMS Administrator.

(2) *Judicial review.* To the extent it is available by law, an appellant may seek judicial review of a final Exchange eligibility appeal decision.

(3) *Implementation date.* The administrative review process is available for eligibility appeal decisions issued on or after January 1, 2024.

* * * * *

■ 17. Add subpart P, consisting of §§ 155.1500 through 155.1515, to read as follows:

Subpart P—Improper Payment Pre-Testing and Assessment (IPPTA) for State-based Exchanges

Sec.
155.1500 Purpose and scope.
155.1505 Definitions.
155.1510 Data submission.
155.1515 Pre-testing and assessment procedures.

Subpart P—Improper Payment Pre-Testing and Assessment (IPPTA) for State-based Exchanges

§ 155.1500 Purpose and scope.

(a) This subpart sets forth the requirements of the IPPTA. The IPPTA is an initiative between HHS and the State-based Exchanges. These requirements are intended to:

(1) Prepare State-based Exchanges for the planned measurement of improper payments.

(2) Test processes and procedures that support HHS's review of determinations of advance payments of the premium tax credit (APTC) made by State-based Exchanges.

(3) Provide a mechanism for HHS and State-based Exchanges to share information that will aid in developing an efficient measurement process.

(b) [Reserved]

§ 155.1505 Definitions.

As used in this subpart–

Business rules means the State-based Exchange's internal directives defining, guiding, or constraining the State-based Exchange's actions when making eligibility determinations and related APTC calculations.

Entity relationship diagram means a graphical representation illustrating the organization and relationship of the data elements that are pertinent to applications for QHP and associated APTC payments.

Pre-testing and assessment means the process that uses the procedures specified in § 155.1515 to prepare State-based Exchanges for the planned measurement of improper payments of APTC.

Pre-testing and assessment checklist means the document that contains

criteria that HHS will use to review a State-based Exchange's ability to accomplish the requirements of the IPPTA.

Pre-testing and assessment data request form means the document that specifies the structure for the data elements that HHS will require each State-based Exchange to submit.

Pre-testing and assessment period means the two calendar year timespan during which HHS will engage in pre-testing and assessment procedures with a State-based Exchange.

Pre-testing and assessment plan means the template developed by HHS in collaboration with each State-based Exchange enumerating the procedures, sequence, and schedule to accomplish pre-testing and assessment.

Pre-testing and assessment report means the summary report provided by HHS to each State-based Exchange at the end of the State-based Exchange's pre-testing and assessment period that will include, but not be limited to, the State-based Exchange's status regarding completion of each of the pre-testing and assessment procedures specified in § 155.1515, as well as observations and recommendations that result from processing and reviewing the data submitted by the State-based Exchange to HHS.

§ 155.1510 Data submission.

(a) *Requirements.* For purposes of the IPPTA, a State-based Exchange must submit the following information in a form and manner specified by HHS:

(1) *Data documentation.* The State-based Exchange must provide to HHS the following data documentation:

(i) The State-based Exchange's data dictionary including attribute name, data type, allowable values, and description;

(ii) An entity relationship diagram, which shall include the structure of the data tables and the residing data elements that identify the relationships between the data tables; and

(iii) Business rules and related calculations.

(2) *Data for processing and testing.* The State-based Exchange must use the pre-testing and assessment data request form, or other method as specified by HHS, to submit to HHS the application data associated with no fewer than 10 tax household identification numbers and the associated policy identification numbers that address scenarios specified by HHS to allow HHS to test all of the pre-testing and assessment processes and procedures.

(b) *Timing.* The State-based Exchange must submit the information specified in paragraph (a) of this section within the timelines in the pre-testing and assessment plan specified in § 155.1515.

§ 155.1515 Pre-testing and assessment procedures.

(a) *General requirement.* The State-based Exchanges are required to participate in the IPPTA for a period of two calendar years. The State-based Exchange and HHS will execute the pre-testing and assessment procedures in this section within the timelines in the pre-testing and assessment plan.

(b) *Orientation and planning processes.* (1) As a part of the orientation process, HHS will provide State-based Exchanges with an overview of the pre-testing and assessment procedures and identify documentation that a State-based Exchange must provide to HHS for pre-testing and assessment.

(2) As a part of the planning process, HHS, in collaboration with each State-based Exchange, will develop a pre-testing and assessment plan that takes into consideration relevant activities, if any, that were completed during a prior, voluntary State engagement. The pre-testing and assessment plan will include the pre-testing and assessment checklist.

(3) At the conclusion of the pre-testing and assessment planning process, HHS will issue the pre-testing and assessment plan specific to that State-based Exchange. The pre-testing and assessment plan will be for HHS and State-based Exchange internal use only and will not be made available to the public by HHS unless otherwise required by law.

(c) *Notifications and updates*—(1) *Notifications*. As needed throughout the pre-testing and assessment period, HHS will issue notifications to State-based Exchanges concerning information related to the pre-testing and assessment processes and procedures.

(2) *Updates regarding changes.* Throughout the pre-testing and assessment period, the State-based Exchange must provide HHS with information regarding any operational, policy, business rules, information technology, or other changes that may impact the ability of the State-based Exchange to satisfy the requirements of the pre-testing and assessment.

(d) *Submission of required data and data documentation.* As specified in § 155.1510, HHS will inform State-based Exchanges about the form and manner for State-based Exchanges to submit required data and data documentation to HHS in accordance with the pre-testing and assessment plan.

(e) *Data processing.* (1) HHS will coordinate with each State-based Exchange to track and manage the data and data documentation submitted by a State-based Exchange as specified in § 155.1510(a)(1) and (2).

(2) HHS will coordinate with each State-based Exchange to provide assistance in aligning the data specified in § 155.1510(a)(2) from the State-based Exchange's existing data structure to the standardized set of data elements.

(3) HHS will coordinate with each State-based Exchange to interpret and validate the data specified in § 155.1510(a)(2).

(4) HHS will use the data and data documentation submitted by the State-based Exchange to execute the pre-testing and assessment procedures.

(f) *Pre-testing and assessment checklist.* HHS will issue the pre-testing and assessment checklist as part of the pre-testing and assessment plan. The pre-testing and assessment checklist criteria will include but are not limited to:

(1) A State-based Exchange's submission of the data documentation as specified in § 155.1510(a)(1).

(2) A State-based Exchange's submission of the data for processing and testing as specified in § 155.1510(a)(2); and

(3) A State-based Exchange's completion of the pre-testing and assessment processes and procedures related to the IPPTA program.

(g) *Pre-testing and assessment report.* Subsequent to the completion of a State-based Exchange's pre-testing and assessment period, HHS will issue a pre-testing and assessment report specific to that State-based Exchange. The pre-testing and assessment report will be for HHS and State-based Exchange internal use only and will not be made available to the public by HHS unless otherwise required by law.

PART 156—HEALTH INSURANCE ISSUER STANDARDS UNDER THE AFFORDABLE CARE ACT, INCLUDING STANDARDS RELATED TO EXCHANGES

■ 18. The authority citation for part 156 continues to read as follows:

Authority: 42 U.S.C. 18021–18024, 18031–18032, 18041–18042, 18044, 18054, 18061, 18063, 18071, 18082, and 26 U.S.C. 36B.

■ 19. Section 156.201 is revised to read as follows:

§ 156.201 Standardized plan options.

A qualified health plan (QHP) issuer in a Federally-facilitated Exchange or a State-based Exchange on the Federal platform, other than an issuer that is already required to offer standardized plan options under State action taking

place on or before January 1, 2020, must:

(a) For the plan year 2023, offer in the individual market at least one standardized QHP option, defined at § 155.20 of this subchapter, at every product network type, as the term is described in the definition of ''product'' at § 144.103 of this subchapter, at every metal level, and throughout every service area that it also offers non-standardized QHP options, including, for silver plans, for the income-based cost-sharing reduction plan variations, as provided for at § 156.420(a); and

(b) For plan year 2024 and subsequent plan years, offer in the individual market at least one standardized QHP option, defined at § 155.20 of this subchapter, at every product network type, as the term is described in the definition of ''product'' at § 144.103 of this subchapter, at every metal level except the non-expanded bronze metal level, and throughout every service area that it also offers non-standardized QHP options, including, for silver plans, for the income-based cost-sharing reduction plan variations, as provided for at § 156.420(a).

■ 20. Section 156.202 is added to read as follows:

§ 156.202 Non-standardized plan option limits.

A QHP issuer in a Federally-facilitated Exchange or a State-based Exchange on the Federal platform:

(a) For plan year 2024, is limited to offering four non-standardized plan options per product network type, as the term is described in the definition of ''product'' at § 144.103 of this subchapter, metal level (excluding catastrophic plans), and inclusion of dental and/or vision benefit coverage (as defined in paragraph (c) of this section), in any service area.

(b) For plan year 2025 and subsequent plan years, is limited to offering two non-standardized plan options per product network type, as the term is described in the definition of ''product'' at § 144.103 of this subchapter, metal level (excluding catastrophic plans), and inclusion of dental and/or vision benefit coverage (as defined in paragraph (c) of this section), in any service area.

(c) For purposes of paragraphs (a) and (b) of this section, the inclusion of dental and/or vision benefit coverage is defined as coverage of any or all of the following:

(1) Adult dental benefit coverage as defined by the following in the ''Benefits'' column in the Plans and Benefits Template:

(i) Routine Dental Services (Adult);

(ii) Basic Dental Care—Adult; or

(iii) Major Dental Care—Adult.

(2) Pediatric dental benefit coverage as defined by the following in the ''Benefits'' column in the Plans and Benefits Template:

(i) Dental Check-Up for Children;

(ii) Basic Dental Care—Child; or

(iii) Major Dental Care—Child.

(3) Adult vision benefit coverage as defined by the following in the ''Benefits'' column in the Plans and Benefits Template: Routine Eye Exam (Adult).

■ 21. Section 156.210 is amended by adding paragraph (d) to read as follows:

§ 156.210 QHP rate and benefit information.

* * * * *

(d) *Rate requirements* for *stand-alone dental plans.* For benefit and plan years beginning on or after January 1, 2024:

(1) *Age on effective date.* The premium rate charged by an issuer of stand-alone dental plans may vary with respect to the particular plan or coverage involved by determining the enrollee's age. Any age calculation for rating and eligibility purposes must be based on the age as of the time of policy issuance or renewal.

(2) *Guaranteed rates.* An issuer of stand-alone dental plans must set guaranteed rates.

■ 22. Section 156.225 is amended by—

■ a. Revising the section heading;

■ b. In paragraph (a), removing ''and'' from the end of the paragraph;

■ c. In paragraph (b), removing the period and adding in its place ''; and''; and

■ d. Adding paragraph (c).

The revision and addition read as follows:

§ 156.225 Marketing and benefit design of QHPs.

* * * * *

(c) *Plan marketing names.* Offer plans and plan variations with marketing names that include correct information, without omission of material fact, and do not include content that is misleading.

■ 23. Section 156.230 is amended by—

■ a. Revising paragraphs (a)(1) introductory text and (a)(2)(i)(B);

■ b. Adding paragraph (a)(4);

■ c. Revising paragraph (e) introductory text; and

■ d. Removing and reserving paragraph (f).

The revisions and addition read as follows:

§ 156.230 Network adequacy standards.

(a) * * *

(1) Each QHP issuer must use a provider network and ensure that the provider network consisting of in-network providers, as available to all enrollees, meets the following standards:

* * * * *

(2) * * *

(i) * * *

(B) For plan years beginning on or after January 1, 2025, meeting appointment wait time standards established by the Federally-facilitated Exchange. Such appointment wait time standards will be developed for consistency with industry standards and published in guidance.

* * * * *

(4) A limited exception to the requirement described under paragraph (a)(1) of this section that each QHP issuer use a provider network is available to stand-alone dental plans issuers that sell plans in areas where it is prohibitively difficult for the issuer to establish a network of dental providers; this exception is not available to medical QHP issuers. Under this exception, an area is considered ''prohibitively difficult'' for the stand-alone dental plan issuer to establish a network of dental providers based on attestations from State departments of insurance in States with at least 80 percent of counties classified as Counties with Extreme Access Considerations (CEAC) that at least one of the following factors exists in the area of concern: a significant shortage of dental providers, a significant number of dental providers unwilling to contract with Exchange issuers, or significant geographic limitations impacting consumer access to dental providers.

* * * * *

(e) *Out-of-network cost-sharing.* Beginning for the 2018 and later benefit years, for a network to be deemed adequate, each QHP must:

* * * * *

■ 24. Section 156.235 is amended by revising paragraphs (a)(1), (a)(2)(i), (a)(2)(ii)(B), and (b)(2)(i) to read as follows:

§ 156.235 Essential community providers.

(a) * * *

(1) A QHP issuer must include in its provider network a sufficient number and geographic distribution of essential community providers (ECPs), where available, to ensure reasonable and timely access to a broad range of such providers for low-income individuals or individuals residing in Health Professional Shortage Areas within the QHP's service area, in accordance with the Exchange's network adequacy standards.

(2) * * *

(i) The QHP issuer's provider network includes as participating providers at least a minimum percentage, as specified by HHS, of available ECPs in each plan's service area collectively across all ECP categories defined under paragraph (a)(2)(ii)(B) of this section, and at least a minimum percentage of available ECPs in each plan's service area within certain individual ECP categories, as specified by HHS. Multiple providers at a single location will count as a single ECP toward both the available ECPs in the plan's service area and the issuer's satisfaction of the ECP participation standard. For plans that use tiered networks, to count toward the issuer's satisfaction of the ECP standards, providers must be contracted within the network tier that results in the lowest cost-sharing obligation. For plans with two network tiers (for example, participating providers and preferred providers), such as many preferred provider organizations (PPOs), where cost-sharing is lower for preferred providers, only preferred providers will be counted towards ECP standards; and

(ii) * * *

(B) At least one ECP in each of the eight (8) ECP categories in each county in the service area, where an ECP in that category is available and provides medical or dental services that are covered by the issuer plan type. The ECP categories are: Federally Qualified Health Centers, Ryan White Program Providers, Family Planning Providers, Indian Health Care Providers, Inpatient Hospitals, Mental Health Facilities, Substance Use Disorder Treatment Centers, and Other ECP Providers. The Other ECP Providers category includes the following types of providers: Rural Health Clinics, Black Lung Clinics, Hemophilia Treatment Centers, Sexually Transmitted Disease Clinics, Tuberculosis Clinics, and Rural Emergency Hospitals.

* * * * *

(b) * * *

(2) * * *

(i) The number of its providers that are located in Health Professional Shortage Areas or five-digit zip codes in which 30 percent or more of the population falls below 200 percent of the Federal poverty level satisfies a minimum percentage, specified by HHS, of available ECPs in each plan's service area collectively across all ECP categories defined under paragraph (a)(2)(ii)(B) of this section, and at least a minimum percentage of available ECPs in each plan's service area within certain individual ECP categories, as specified by HHS. Multiple providers at a single location will count as a single ECP toward both the available ECPs in the plan's service area and the issuer's satisfaction of the ECP participation standard. For plans that use tiered networks, to count toward the issuer's satisfaction of the ECP standards, providers must be contracted within the network tier that results in the lowest cost-sharing obligation. For plans with two network tiers (for example, participating providers and preferred providers), such as many PPOs, where cost sharing is lower for preferred providers, only preferred providers would be counted towards ECP standards; and

* * * * *

■ 25. Section 156.270 is amended by revising paragraph (f) to read as follows:

§ 156.270 Termination of coverage or enrollment for qualified individuals.

* * * * *

(f) *Notice of non-payment of premiums.* If an enrollee is delinquent on premium payment, the QHP issuer must provide the enrollee with notice of such payment delinquency. Issuers offering QHPs in Exchanges on the Federal platform must provide such notices promptly and without undue delay, within 10 business days of the date the issuer should have discovered the delinquency.

* * * * *

■ 26. Section 156.1210 is amended by revising paragraph (c) to read as follows:

§ 156.1210 Dispute submission.

* * * * *

(c) *Deadline for describing inaccuracies.* To be eligible for resolution under paragraph (b) of this section, an issuer must describe all inaccuracies identified in a payment and collections report before the end of the 3-year period beginning at the end of the plan year to which the inaccuracy relates. For plan years 2015 through 2019, to be eligible for resolution under paragraph (b) of this section, an issuer must describe all inaccuracies identified in a payment and collections report before January 1, 2024. If a payment error is discovered after the timeframe set forth in this paragraph (c), the issuer must notify HHS, the State Exchange, or State-based Exchanges on the Federal platform (SBE–FP) (as applicable) and repay any overpayments to HHS.

* * * * *

■ 27. Section 156.1220 is amended by revising paragraphs (a)(4)(ii) and (b)(1) to read as follows:

§ 156.1220 Administrative appeals.

(a) * * *

(4) * * *

(ii) Notwithstanding paragraph (a)(1) of this section, a reconsideration with respect to a processing error by HHS, HHS's incorrect application of the relevant methodology, or HHS's mathematical error may be requested only if, to the extent the issue could have been previously identified, the issuer notified HHS of the dispute through the applicable process for reporting a discrepancy set forth in §§ 153.630(d)(2) and (3) and 153.710(d)(2) of this subchapter and § 156.430(h)(1), it was so identified and remains unresolved.

* * * * *

(b) * * *

(1) *Manner and timing for request.* A request for an informal hearing must be made in writing and filed with HHS within 30 calendar days of the date of the reconsideration decision under paragraph (a)(5) of this section. If the last day of this period is not a business day, the request for an informal hearing must be made in writing and filed by the next applicable business day.

* * * * *

Dated: April 17, 2023.

Xavier Becerra,

Secretary, Department of Health and Human Services.

[FR Doc. 2023–08368 Filed 4–19–23; 4:15 pm]

BILLING CODE 4120–01–P

FEDERAL REGISTER

Vol. 88 Thursday,

No. 81 April 27, 2023

Part III

Environmental Protection Agency

40 CFR Parts 1036, 1037, et al.

Greenhouse Gas Emissions Standards for Heavy-Duty Vehicles—Phase 3; Proposed Rule

ENVIRONMENTAL PROTECTION AGENCY

40 CFR Parts 1036, 1037, 1054, 1065, and 1074

[EPA–HQ–OAR–2022–0985; FRL–8952–01–OAR]

RIN 2060–AV50

Greenhouse Gas Emissions Standards for Heavy-Duty Vehicles—Phase 3

AGENCY: Environmental Protection Agency (EPA).

ACTION: Notice of proposed rulemaking.

SUMMARY: The Environmental Protection Agency (EPA) is proposing to promulgate new GHG standards for heavy-duty highway vehicles starting in model year (MY) 2028 through MY 2032 and to revise certain GHG standards for MY 2027 that were established previously under EPA's Greenhouse Gas Emissions and Fuel Efficiency Standards for Medium- and Heavy-Duty Engines and Vehicles—Phase 2 rule (''HD GHG Phase 2''). This document proposes updates to discrete elements of the Averaging Banking and Trading program, including a proposal to eliminate the last MY year of the HD GHG Phase 2 advanced technology incentive program for certain types of electric highway heavy-duty vehicles. EPA is proposing to add warranty requirements for batteries and other components of zero-emission vehicles and to require customer-facing battery state-of-health monitors for plug-in hybrid and battery electric vehicles. In this document, we are also proposing additional revisions and clarifying and editorial amendments to certain highway heavy-duty vehicle provisions and certain test procedures for heavy-duty engines. Finally, as part of this action, EPA is proposing to revise its regulations addressing preemption of state regulation of new locomotives and new engines used in locomotives.

DATES: Comments must be received on or before June 16, 2023. Comments on the information collection provisions submitted to the Office of Management and Budget (OMB) under the Paperwork Reduction Act (PRA) are best assured of consideration by OMB if OMB receives a copy of your comments on or before May 30, 2023. *Public hearing:* EPA will announce information regarding the public hearing for this proposal in a supplemental **Federal Register** document. Please refer to the **SUPPLEMENTARY INFORMATION** section for additional information on the public hearing.

ADDRESSES: You may send comments, identified by Docket ID No. EPA–HQ–OAR–2022–0985, by any of the following methods:

- *Federal eRulemaking Portal: https://www.regulations.gov/* (our preferred method). Follow the online instructions for submitting comments.
- *Email: a-and-r-Docket@epa.gov.* Include Docket ID No. EPA–HQ–OAR–2022–0985 in the subject line of the message.
- *Mail:* U.S. Environmental Protection Agency, EPA Docket Center, OAR Docket, Mail Code 28221T, 1200 Pennsylvania Avenue NW, Washington, DC 20460.
- *Hand Delivery or Courier:* EPA Docket Center, WJC West Building, Room 3334, 1301 Constitution Avenue NW, Washington, DC 20004. The Docket Center's hours of operations are 8:30 a.m.–4:30 p.m., Monday–Friday (except Federal Holidays).

Instructions: All submissions received must include the Docket ID No. for this rulemaking. Comments received may be posted without change to *https://www.regulations.gov/*, including any personal information provided. For detailed instructions on sending comments and additional information on the rulemaking process, see the ''Public Participation'' heading of the **SUPPLEMENTARY INFORMATION** section of this document.

FOR FURTHER INFORMATION CONTACT: Brian Nelson, Assessment and Standards Division, Office of Transportation and Air Quality, Environmental Protection Agency, 2000 Traverwood Drive, Ann Arbor, MI 48105; telephone number: (734) 214–4278; email address: *nelson.brian@epa.gov.*

SUPPLEMENTARY INFORMATION:

Public Participation

Written Comments

Submit your comments, identified by Docket ID No. EPA–HQ–OAR–2022–0985, at *https://www.regulations.gov* (our preferred method), or the other methods identified in the **ADDRESSES** section. Once submitted, comments cannot be edited or removed from the docket. The EPA may publish any comment received to its public docket. Do not submit to EPA's docket at *https://www.regulations.gov* any information you consider to be Confidential Business Information (CBI), Proprietary Business Information (PBI), or other information whose disclosure is restricted by statute. If you choose to submit CBI or PBI as a comment to EPA's docket, please send those materials to the person listed in the **FOR FURTHER INFORMATION CONTACT** section. Multimedia submissions (audio, video, etc.) must be accompanied by a written comment. The written comment is considered the official comment and should include discussion of all points you wish to make. The EPA will generally not consider comments or comment contents located outside of the primary submission (*i.e.,* on the web, cloud, or other file sharing system). Commenters who would like EPA to further consider in this rulemaking any relevant comments that they provided on the HD2027 NPRM regarding proposed HD vehicle GHG standards for the MYs at issue in this proposal must resubmit those comments to EPA during this proposal's comment period. Please visit *https://www.epa.gov/dockets/commenting-epa-dockets* for additional submission methods; the full EPA public comment policy; information about CBI, PBI, or multimedia submissions; and general guidance on making effective comments.

Participation in Virtual Public Hearing

EPA will announce information regarding the public hearing for this proposal in a supplemental **Federal Register** document. The hearing notice, registration information, and any updates to the hearing schedule will also be available at *https://www.epa.gov/regulations-emissions-vehicles-and-engines/proposed-rule-greenhouse-gas-emissions-standards-heavy.* Please refer to this website for any updates regarding the hearings. EPA does not intend to publish additional documents in the **Federal Register** announcing updates to the hearing schedule.

Docket: All documents in the docket are listed on the *www.regulations.gov* website. Although listed in the index, some information is not publicly available, *e.g.,* CBI or other information whose disclosure is restricted by statute. Certain other material, such as copyrighted material, is not placed on the internet and will be publicly available only in hard copy form through the EPA Docket Center at the location listed in the **ADDRESSES** section of this document.

General Information

Does this action apply to me?

This action relates to companies that manufacture, sell, or import into the United States new heavy-duty highway vehicles and engines. This action also relates to state and local governments. Potentially affected categories and entities include the following:

Category	NAICS codes [a]	NAICS title
Industry	336110	Automobile and Light Duty Motor Vehicle Manufacturing.
Industry	336120	Heavy Duty Truck Manufacturing.
Industry	336211	Motor Vehicle Body Manufacturing.
Industry	336213	Motor Home Manufacturing.
Industry	333618	Other Engine Equipment Manufacturing.
Industry	811198	All Other Automotive Repair and Maintenance.
Government		State and local governments.[b]

[a] NAICS Association. NAICS & SIC Identification Tools. Available online: *https://www.naics.com/search.*
[b] It should be noted that the proposed revisions do not impose any requirements that state and local governments must meet, but rather implement the Clean Air Act preemption provisions for locomotives.

This table is not intended to be exhaustive, but rather provides a guide for readers regarding entities potentially affected by this action. This table lists the types of entities that EPA is now aware could potentially be affected by this action. Other types of entities not listed in the table could also be affected. To determine whether your entity is regulated by this action, you should carefully examine the applicability criteria found in 40 CFR parts 1036, 1037, 1054, 1065, and 1074.[1] If you have questions regarding the applicability of this action to a particular entity, consult the person listed in the **FOR FURTHER INFORMATION CONTACT** section.

What action is the Agency taking?

The Environmental Protection Agency (EPA) is proposing to promulgate new GHG standards for heavy-duty highway vehicles starting in model year (MY) 2028 through MY 2032 and to revise certain GHG standards for MY 2027 that were established previously under EPA's Greenhouse Gas Emissions and Fuel Efficiency Standards for Medium- and Heavy-Duty Engines and Vehicles—Phase 2 rule (''HD GHG Phase 2'') that we believe are appropriate and feasible considering lead time, costs, and other factors. EPA also proposes that it is appropriate to eliminate the last model year (MY 2027) of advanced technology incentives for certain electric highway heavy-duty vehicles, initially established under the HD GHG Phase 2 rule. EPA is proposing to add warranty requirements for batteries and other components of zero-emission vehicles and to require customer-facing battery state-of-health monitors for plug-in hybrid and battery electric vehicles. We are also proposing revisions and clarifying and editorial amendments to certain highway heavy-duty vehicle provisions of 40 CFR part 1037 and certain test procedures for heavy-duty engines in 40 CFR parts 1036 and 1065. In addition, in this action EPA is proposing to revise its regulations addressing preemption of state regulation of new locomotives and new engines used in locomotives, to more closely align with language in the Clean Air Act.

What is the Agency's authority for taking this action?

Clean Air Act section 202(a), 42 U.S.C. 7521(a), requires that EPA establish emission standards for air pollutants from new motor vehicles or new motor vehicle engines, which, in the Administrator's judgment, cause or contribute to air pollution that may reasonably be anticipated to endanger public health or welfare. The Administrator has found that GHG emissions from highway heavy-duty vehicles and engines cause or contribute to air pollution that may endanger public health or welfare. Therefore, the Administrator is exercising his authority under CAA section 202(a)(1)–(2) to establish standards for GHG emissions from highway heavy-duty vehicles. In addition, section 209(e)(2)(B) of the CAA, 42 U.S.C. 7543(e)(2)(B), requires EPA to promulgate regulations implementing subsection 209(e) of the Act, which addresses the prohibition of state standards regarding certain classes of new nonroad engines or new nonroad vehicles including new locomotives and new engines used in locomotives, as well as EPA's authorization criteria for certain California standards for other nonroad engines or nonroad vehicles. See Section I.D of this preamble for more information on the agency's authority for this action.

Did EPA conduct a peer review before issuing this action?

This proposed regulatory action is supported by influential scientific information. EPA, therefore, is conducting peer review in accordance with OMB's Final Information Quality Bulletin for Peer Review. Specifically, we conducted the peer review process on two analyses: (1) Emission Adjustments for Onroad Vehicles in MOVES3.R1, and (2) Greenhouse Gas and Energy Consumption Rates for Onroad Vehicles in MOVES3.R1. In addition, we plan to conduct a peer review of inputs to the Heavy-Duty Technology Resource Use Case Scenario (HD TRUCS) tool used to analyze HD vehicle energy usage and associated component costs. All peer review were or will be in the form of letter reviews conducted by a contractor. The peer review reports for each analysis will be posted in the docket for this action and will be posted at EPA's Science Inventory (*https://cfpub.epa.gov/si/*).

Table of Contents

Executive Summary
A. Need for Regulatory Action
B. The Opportunity for Clean Air Provided by Zero-Emission Vehicle Technologies
C. Summary of the Major Provisions in the Regulatory Action
D. Impacts of the Proposed Standards
I. Introduction
A. Brief Overview of the Heavy-Duty Industry
B. History of Greenhouse Gas Emission Standards for Heavy-Duty Engines and Vehicles
C. What has changed since we finalized the HD GHG Phase 2 rule?
D. EPA Statutory Authority for the Proposal
E. Coordination With Federal and State Partners
F. Stakeholder Engagement
II. Proposed CO_2 Emission Standards
A. Public Health and Welfare Need for GHG Emission Reductions
B. Summary of Comments Received From HD2027 NPRM
C. Background on the CO_2 Emission Standards in the HD GHG Phase 2 Program
D. Vehicle Technologies
E. Technology, Charging Infrastructure, and Operating Costs
F. Proposed Standards
G. EPA's Basis That the Proposed Standards Are Feasible and Appropriate Under the Clean Air Act
H. Potential Alternatives
I. Small Businesses
III. Compliance Provisions, Flexibilities, and Test Procedures
A. Proposed Revisions to the ABT Program
B. Battery Durability Monitoring and Warranty Requirements
C. Additional Proposed Revisions to the Regulations
IV. Proposed Program Costs
A. IRA Tax Credits

[1] See 40 CFR 1036.1 through 1036.15 and 40 CFR 1037.1 through 1037.15.

B. Technology Package Costs
C. Manufacturer Costs
D. Purchaser Costs
E. Social Costs
V. Estimated Emission Impacts From the Proposed Program
A. Model Inputs
B. Estimated Emission Impacts From the Proposed Standards
VI. Climate, Health, Air Quality, Environmental Justice, and Economic Impacts
A. Climate Change Impacts
B. Health and Environmental Effects Associated With Exposure to Non-GHG Pollutants
C. Air Quality Impacts of Non-GHG Pollutants
D. Environmental Justice
E. Economic Impacts
F. Oil Imports and Electricity and Hydrogen Consumption
VII. Benefits of the Proposed Program
A. Social Cost of GHGs
B. Criteria Pollutant Health Benefits
C. Energy Security
VIII. Comparison of Benefits and Costs
A. Methods
B. Results
IX. Analysis of Alternative CO_2 Emission Standards
A. Comparison of Proposal and Alternative
B. Emission Inventory Comparison of Proposal and Slower Phase-In Alternative
C. Program Costs Comparison of Proposal and Alternative
D. Benefits
E. How do the proposal and alternative compare in overall benefits and costs?
X. Preemption of State Standards and Requirements for New Locomotives or New Engines Used in Locomotives
A. Overview
B. Background
C. Evaluation of Impact of Regulatory Preemption
D. What is EPA proposing?
XI. Statutory and Executive Order Reviews
A. Executive Order 12866: Regulatory Planning and Review and Executive Order 13563: Improving Regulation and Regulatory Review
B. Paperwork Reduction Act (PRA)
C. Regulatory Flexibility Act (RFA)
D. Unfunded Mandates Reform Act (UMRA)
E. Executive Order 13132: Federalism
F. Executive Order 13175: Consultation and Coordination With Indian Tribal Governments
G. Executive Order 13045: Protection of Children From Environmental Health and Safety Risks
H. Executive Order 13211: Actions Concerning Regulations That Significantly Affect Energy Supply, Distribution, or Use
I. National Technology Transfer and Advancement Act (NTTAA) and 1 CFR Part 51
J. Executive Order 12898: Federal Actions To Address Environmental Justice in Minority Populations and Low-Income Populations.
XII. Statutory Authority and Legal Provisions
List of Subjects

Executive Summary

A. Need for Regulatory Action

The Environmental Protection Agency (EPA) is proposing this action to further reduce GHG air pollution from highway heavy-duty (hereafter referred to as ''heavy-duty'' or HD) engines and vehicles across the United States. Despite the significant emissions reductions achieved by previous rulemakings, GHG emissions from HD vehicles continue to impact public health, welfare, and the environment. The transportation sector is the largest U.S. source of GHG emissions, representing 27 percent of total GHG emissions.[2] Within the transportation sector, heavy-duty vehicles are the second largest contributor to GHG emissions and are responsible for 25 percent of GHG emissions in the sector.[3] GHG emissions have significant impacts on public health and welfare as evidenced by the well-documented scientific record and as set forth in EPA's Endangerment and Cause or Contribute Findings under Section 202(a) of the CAA.[4] Additionally, major scientific assessments continue to be released that further advance our understanding of the climate system and the impacts that GHGs have on public health and welfare both for current and future generations, as discussed in Section II.A.

The potential for the application of zero-emission vehicle (ZEV) technologies in the heavy-duty sector presents an opportunity for significant reductions in heavy-duty GHG emissions over the long term.[5] Major trucking fleets, HD vehicle and engine manufacturers, and U.S. states have announced plans to increase the use of heavy-duty zero-emissions technologies in the coming years. The 2021 Infrastructure Investment and Jobs Act (commonly referred to as the ''Bipartisan Infrastructure Law'' or BIL) and the Inflation Reduction Act of 2022 (''Inflation Reduction Act'' or IRA) together include many incentives for the development, production, and sale of ZEVs, electric charging infrastructure, and hydrogen, which are expected to spur significant innovation in the heavy-duty sector.[6] In addition, supporting assessments provided by some commenters during the comment period for the EPA's March 2022 Notice of Proposed Rulemaking ''Control of Air Pollution from New Motor Vehicles: Heavy-Duty Engine and Vehicle Standards'' (hereafter referred to as ''HD2027 NPRM''), which proposed strengthening existing MY 2027 GHG standards for heavy-duty vehicles, suggested that significant ZEV adoption rates can be achieved over the next decade.[7] [8] We discuss these developments in more detail in Section I. EPA also projects that improvements in internal combustion engines, powertrains, and vehicle technologies such as those EPA projected would be used to achieve the HD GHG Phase 2 standards will also be needed to continue to reduce GHG emissions from the HD sector, and as described in Section II.D.1, these technology improvements continue to be feasible. With respect to the need for GHG reductions and these heavy-duty sector developments, EPA is proposing in this document more stringent MY 2027 HD vehicle CO_2 emission standards (*i.e.,* beyond what was finalized in HD GHG Phase 2) and new HD vehicle CO2 emission standards starting in MYs 2028 through 2032 that we believe are appropriate and feasible considering cost, lead time, and other factors, as described throughout this preamble and supporting materials in the docket for this proposed rulemaking.

EPA sets highway heavy-duty vehicle and engine standards for GHG emissions

[2] Inventory of U.S. Greenhouse Gas Emissions and Sinks: 1990–2020 (EPA–430–R–22–003, published April 2022).

[3] *Ibid.*

[4] 74 FR 66496, December 15, 2009; see also 81 FR 54422, August 15, 2016 (making a similar endangerment and cause or contribute findings for GHGs from aircraft under section 231(a)(2)(A)). Recently, in April 2022, EPA denied administrative petitions relating to the 2009 finding, determining that ''[t]he science supporting the Administrator's [2009] finding that elevated concentrations of greenhouse gases in the atmosphere may reasonably be anticipated to endanger the public health and welfare of current and future U.S. generations is robust, voluminous, and compelling, and has been strongly affirmed by recent scientific assessments. . . .'' EPA's Denial of Petitions Relating to the Endangerment and Cause or Contribute Findings for Greenhouse Gases Under Section 202(a) of the Clean Air Act 1, available at *https://www.epa.gov/system/files/documents/2022-04/decision_document.pdf.*

[5] Throughout the preamble, we use the term ZEV technologies to refer to technologies that result in zero tailpipe emissions. Example ZEV technologies include battery electric vehicles and fuel cell vehicles.

[6] Infrastructure Investment and Jobs Act, Public Law 117–58, 135 Stat. 429 (2021) (''Bipartisan Infrastructure Law'' or ''BIL''), available at *https://www.congress.gov/117/plaws/publ58/PLAW-117publ58.pdf*; Inflation Reduction Act of 2022, Public Law 117–169, 136 Stat. 1818 (2022) (''Inflation Reduction Act'' or ''IRA''), available at *https://www.congress.gov/117/bills/hr5376/BILLS-117hr5376enr.pdf.*

[7] Notice of Proposed Rulemaking for Control of Air Pollution from New Motor Vehicles: Heavy-Duty Engine and Vehicle Standards. 87 FR 17414 (March 28, 2022).

[8] U.S. EPA, ''Control of Air Pollution from New Motor Vehicles: Heavy-Duty Engine and Vehicle Standards—Response to Comments.'' Section 28. Docket EPA–HQ–OAR–2019–0055.

under its authority in CAA section 202(a). Section 202(a)(1) states that ''the Administrator shall by regulation prescribe (and from time to time revise) . . . standards applicable to the emission of any air pollutant from any class or classes of new motor vehicles or new motor vehicle engines, . . . which in his judgment cause, or contribute to, air pollution which may reasonably be anticipated to endanger public health or welfare.'' Section 202(a)(2) provides that standards under section 202(a) apply to such vehicles and engines ''after such period as the Administrator finds necessary to permit the development and application of the requisite technology, giving appropriate consideration to the cost of compliance within such period.'' Pursuant to section 202(a)(1), such standards apply to vehicles and engines ''for their useful life.'' EPA also may consider other factors such as the impacts of potential GHG standards on the industry, fuel savings, oil conservation, energy security, and other relevant considerations. Congress authorized the Administrator to determine the levels of emission reductions achievable for such air pollutants through the application of technologies taking into account cost, lead time, and other factors.

Pursuant to our 202(a) authority, EPA first established standards for the heavy-duty sector in the 1970s. Since then, the Agency has revised the standards multiple times based upon updated data and information, the continued need to mitigate air pollution, and Congressional enactments directing EPA to regulate emissions from the heavy-duty sector more stringently. Since 1985, HD engine and vehicle manufacturers could comply with criteria-pollutant standards using averaging,[9] EPA also introduced banking and trading compliance flexibilities in the HD program in 1990,[10] and EPA's HD GHG standards and regulations have consistently included an averaging, banking, and trading (ABT) program from the start.[11] Since the first standards, subsequent standards have extended to additional pollutants (including GHGs), increased in stringency, and spurred the development and deployment of numerous new vehicle and engine technologies. For example, the most recent GHG standards for HD vehicles will reduce CO_2 emissions by approximately 1.1 billion metric tons over the lifetime of the new vehicles sold under the program (HD GHG Phase 2, 81 FR 73478, October 25, 2016) and the most recent criteria-pollutant standards are projected to reduce NO_X emissions from the in-use HD fleet by almost 50 percent in 2045 (''Control of Air Pollution from New Motor Vehicles: Heavy-Duty Engine and Vehicle Standards'' (hereafter referred to as ''HD2027 FRM''), 88 FR 4296, January 24, 2023). This proposal builds upon this multi-decadal tradition of regulating heavy-duty vehicles and engines, by applying the Agency's clear and longstanding statutory authority considering new real-world data and information, including recent Congressional action in the Bipartisan Infrastructure Law (BIL) and Inflation Reduction Act (IRA).

This Notice of Proposed Rulemaking is consistent with Executive Order 14037 on Strengthening American Leadership in Clean Cars and Trucks, which directs the Administrator to ''consider updating the existing greenhouse gas emissions standards for heavy-duty engines and vehicles beginning with model year 2027 and extending through and including at least model year 2029'' and directs EPA to ''consider beginning work on a rulemaking under the Clean Air Act to establish new greenhouse gas emissions standards for heavy-duty engines and vehicles to begin as soon as model year 2030.''[12] Consistent with this direction, in the HD2027 NPRM, we proposed building on and improving the existing emission control program for highway heavy-duty vehicles by further strengthening certain MY 2027 GHG standards finalized under the HD GHG Phase 2 rule. However, we did not take final action on the GHG portion of the HD2027 proposal in the final rule (HD2027 FRM). Since that time, EPA has continued its analysis of the heavy-duty vehicle sector including the recent passage of the IRA, which as we discuss further in this preamble provides significant incentives for GHG reductions in the heavy-duty vehicle sector. Based on this updated information and analysis, and consistent with EPA's authority under the Clean Air Act section 202(a), we are issuing this Notice of Proposed Rulemaking (''HD GHG Phase 3 NPRM'') to propose certain revised HD vehicle carbon dioxide (CO_2) standards for MY 2027 and certain new HD vehicle CO_2 standards for MYs 2028, 2029, 2030, 2031, and 2032 that would achieve significant GHG reductions for these and later model years (note the MY 2032 standards would remain in place for MY 2033 and later). We are requesting comment on an alternative set of CO_2 standards that would more gradually increase in stringency than the proposed standards for the same MYs. EPA also requests comment on setting GHG standards starting in MYs 2027 through 2032 that would reflect: values less stringent than the lower stringency alternative for certain market segments, values in between the proposed standards and the alternative standards, values in between the proposed standards and those that would reflect ZEV adoption levels (*i.e.,* percent of ZEVs in production volumes) used in California's ACT, values that would reflect the level of ZEV adoption in the ACT program, and values beyond those that would reflect ZEV adoption levels in ACT such as the 50- to 60-percent ZEV adoption range represented by the publicly stated goals of several major original equipment manufacturers (OEMs) for 2030.[13] [14] [15] [16] [17] We also request comment on promulgating additional new standards with increasing stringency in MYs 2033 through 2035. EPA anticipates that the appropriate choice of final standards within this range will reflect the Administrator's judgments about the uncertainties in EPA's analyses as well as consideration of public comment and updated information where available.

CAA section 202(a) directs EPA to regulate emissions of air pollutants from new motor vehicles and engines, which in the Administrator's judgment, cause or contribute to air pollution that may reasonably be anticipated to endanger

[9] 50 FR 10606, Mar. 15, 1985; see also *NRDC* v. *Thomas*, 805 F.2d 410, 425 (D.C. Cir. 1986) (upholding emissions averaging in the 1985 HD final rule).

[10] 55 FR 30584, July 26, 1990.

[11] 76 FR 57128, September 15, 2011 (explaining ABT is a flexibility that provides an opportunity for manufacturers to make necessary technological improvements while reducing the overall cost of the program); 81 FR 73495, October 25, 2016 (explaining that ABT plays an important role in providing manufacturers flexibilities, including helping reduce costs).

[12] 86 FR 43583, August 5, 2021. Executive Order 14037. Strengthening American Leadership in Clean Cars and Trucks.

[13] California Air Resources Board, Final Regulation Order—Advanced Clean Trucks Regulation. Filed March 15, 2021. Available at: *https://ww2.arb.ca.gov/sites/default/files/barcu/regact/2019/act2019/fro2.pdf.*

[14] Scania, 'Scania's Electrification Roadmap,' Scania Group, November 24, 2021, *https://www.scania.com/group/en/home/newsroom/news/2021/Scanias-electrification-roadmap.html.*

[15] AB Volvo, 'Volvo Trucks Launches Electric Truck with Longer Range,' Volvo Group, January 14, 2022, *https://www.volvogroup.com/en/news-and-media/news/2022/jan/news-4158927.html.*

[16] Deborah Lockridge, 'What Does Daimler Truck Spin-off Mean for North America?,' Trucking Info (November 11, 2021). *https://www.truckinginfo.com/10155922/what-does-daimler-truck-spin-off-mean-for-north-america.*

[17] Navistar presentation at the Advanced Clean Transportation (ACT) Expo, Long Beach, CA (May 9–11, 2022).

public health or welfare. While standards promulgated pursuant to CAA section 202(a) are based on application of technology, the statute does not specify a particular technology or technologies that must be used to set such standards; rather, Congress has authorized and directed EPA to adapt its standards to emerging technologies. In 2009, the Administrator issued an Endangerment Finding under CAA section 202(a), concluding that GHG emissions from new motor vehicles and engines, including heavy-duty vehicles and engines, cause or contribute to air pollution that may endanger public health or welfare.[18] Pursuant to the 2009 Endangerment and Cause or Contribute Finding, EPA promulgated GHG regulations for heavy-duty vehicles and engines in 2011 and 2016, referred to as the HD GHG Phase 1 and HD GHG Phase 2 programs, respectively.[19] In the HD GHG Phase 1 and Phase 2 programs, EPA set emission standards that the Agency found appropriate and feasible, considering cost, lead time, and other factors.

Over time, manufacturers have not only continued to find ways to further reduce emissions from motor vehicles, including HD vehicles, they have found ways to eliminate tailpipe emissions entirely through the use of zero-emission vehicle technologies. Since the 2009 Endangerment and Cause or Contribute Finding and issuance of the HD GHG Phase 1 and Phase 2 program regulations, there has continued to be significant technological advancement in the vehicle and engine manufacturing sectors, including for such zero-emission vehicle technologies. The HD Phase 3 regulations that we are proposing take into account the ongoing technological innovation in the HD vehicle space and reflect CO_2 emission standards that we consider appropriate and feasible considering cost, lead time, and other factors.

B. The Opportunity for Clean Air Provided by Zero-Emission Vehicle Technologies

When the HD GHG Phase 2 rule was promulgated in 2016, we established CO_2 standards on the premise that ZEV technologies, such as battery electric vehicles (BEVs) and fuel cell electric vehicles (FCEVs), would become more widely available in the heavy-duty market over time, but not in significant volume in the timeframe of the Phase 2 program. We finalized BEV, plug-in hybrid electric vehicle (PHEV), and FCEV advanced technology credit multipliers to encourage the development and sales of these advanced technologies.

Several significant developments have occurred since 2016 that point to ZEV technologies becoming more readily available much sooner than we had previously projected for the HD sector. These developments support the feasibility of ZEV technologies and render adoption of ZEV technologies to reduce GHG emissions more cost-competitive than ever before. First, the HD market has evolved such that early ZEV models are in use today for some applications and are expected to expand to many more applications; costs of ZEV technologies have gone down and are projected to continue to fall; and manufacturers have announced plans to rapidly increase their investments in ZEV technologies over the next decade. In 2022, there were a number of manufacturers producing fully electric HD vehicles for use in a number of applications, and these small volumes are expected to rise (see Section I.C and Draft Regulatory Impact Analysis (DRIA) Chapter 1). The cost to manufacture lithium-ion batteries (the single most expensive component of a BEV) has dropped significantly in the past eight years, and that cost is projected to continue to fall during this decade, all while the performance of the batteries (in terms of energy density) improves.[20] [21] Many of the manufacturers that produce HD vehicles and major firms that purchase HD vehicles have announced billions of dollars' worth of investments in ZEV technologies and significant plans to transition to a zero-carbon fleet over the next ten to fifteen years.[22]

Second, the 2021 BIL and the 2022 IRA laws provide significant and unprecedented monetary incentives for the production and purchase of qualified ZEVs in the HD market. They also provide incentives for qualifying electric charging infrastructure and hydrogen, which will further support a rapid increase in market penetration of HD ZEVs. As a few examples, over the next five years, BIL provisions include $5 billion to fund the replacement of school buses with zero- or low-emission buses and $5.6 billion to support the purchase of zero- or low-emission transit buses and associated infrastructure, with up to $7.5 billion to help build out a national network of EV charging and hydrogen refueling infrastructure, some of which may be used for refueling of heavy duty vehicles. The IRA creates a tax credit of up to $40,000 per vehicle for vehicles over 14,000 pounds (and up to $7,500 per vehicle for vehicles under 14,000 pounds) for the purchase of qualified commercial clean vehicles and provides tax credits for the production and sale of battery cells and modules of up to $45 per kilowatt-hour (kWh). The wide array of incentives in both laws will help to reduce the costs to manufacture, purchase, and operate ZEVs, thereby bolstering their adoption in the market.

Third, there have been multiple actions by states to accelerate the adoption of HD ZEVs. The State of California and other states have adopted the ACT program that includes a manufacturer requirement for zero-emission truck sales.[23] [24] The ACT program would require that ''manufacturers who certify Class 2b-8 chassis or complete vehicles with combustion engines would be required to sell zero-emission trucks as an

[18] 74 FR 66496 (Dec. 15, 2009).

[19] 76 FR 57106 (Sept. 15, 2011); 81 FR 73478 (Oct. 25, 2016).

[20] Mulholland, Eamonn. ''Cost of electric commercial vans and pickup trucks in the United States through 2040.'' Page 7. January 2022. Available at *https://theicct.org/wp-content/uploads/2022/01/cost-ev-vans-pickups-us-2040-jan22.pdf.*

[21] Sharpe, Ben and Hussein Basma. ''A meta-study of purchase costs for zero-emission trucks''. The International Council on Clean Transportation, Working Paper 2022–09 (February 2022). Available online: *https://theicct.org/publication/purchase-cost-ze-trucks-feb22/.*

[22] Environmental Defense Fund (2022) September 2022 Electric Vehicle Market Update: Manufacturer Commitments and Public Policy Initiatives Supporting Electric Mobility in the U.S. and Worldwide, available online at: *https://blogs.edf.org/climate411/files/2022/09/ERM-EDF-Electric-Vehicle-Market-Report_September2022.pdf.*

[23] California Air Resources Board, Final Regulation Order—Advanced Clean Trucks Regulation. Filed March 15, 2021. Available at: *https://ww2.arb.ca.gov/sites/default/files/barcu/regact/2019/act2019/fro2.pdf.*

[24] See, *e.g.,* Final Advanced Clean Truck Amendments, 1461 Mass. Reg. 29 (Jan. 21, 2022) (Massachusetts). Medium- and Heavy-Duty (MHD) Zero Emission Truck Annual Sales Requirements and Large Entity Reporting, 44 N.Y. Reg. 8 (Jan. 19, 2022) (New York), available at *https://dos.ny.gov/system/files/documents/2022/01/011922.pdf.* Advanced Clean Trucks Program and Fleet Reporting Requirements, 53 N.J.R. 2148(a) (Dec. 20, 2021) (New Jersey), available at *https://www.nj.gov/dep/rules/adoptions/adopt_20211220a.pdf* (pre-publication version). Clean Trucks Rule 2021, DEQ–17–2021 (Nov. 17, 2021), available at *http://records.sos.state.or.us/ORSOSWebDrawer/Recordhtml/8581405* (Oregon). Low emission vehicles, Wash. Admin. Code. § 173–423–070 (2021), available at *https://app.leg.wa.gov/wac/default.aspx?cite=173-423-070*; 2021 Wash. Reg. 587356 (Dec. 15, 2021); Wash. Reg. 21–24–059 (Nov. 29, 2021) (amending Wash. Admin. Code. §§ 173–423 and 173–400), available at *https://lawfilesext.leg.wa.gov/law/wsrpdf/2021/24/21-24-059.pdf* (Washington).

increasing percentage of their annual [state] sales from 2024 to 2035.'' [25] [26] In addition, 17 states and the District of Columbia have signed a Memorandum of Understanding establishing goals to support widespread electrification of the HD vehicle market.[27] We discuss these factors further in Section I.

Recognizing the need for additional GHG reductions from HD vehicles and the growth of ZEV technologies in the HD market, last year we proposed strengthening certain existing MY 2027 HD vehicle CO_2 standards as part of the HD2027 NPRM. We received many comments on the proposed updates to those HD vehicle CO_2 emission standards.[28] Many commenters suggested that EPA should further strengthen HD vehicle CO_2 emission standards in MYs 2027 through 2029 beyond the HD2027 NPRM proposed levels because of the accelerating adoption of HD ZEV technologies, and some commenters provided a number of reports that evaluate the potential of electrification of the HD sector in terms of adoption rates, costs, and other factors. Some commenters raised concerns with the HD2027 NPRM proposed changes to certain HD GHG Phase 2 CO_2 emission standards, asserting the significant investment and lead time required for development and verification of the durability of ZEV technologies, especially given the diverse range of applications in the HD market.

In the HD2027 NPRM, EPA also requested comment on several approaches to modify the existing Advanced Technology Credit Multipliers (''credit multipliers'') under the HD GHG Phase 2 program. Many commenters supported limiting the credits in some fashion, such as eliminating credit multipliers for ZEVs produced due to state requirements or phasing out the credit multipliers earlier than MY 2027, which was the last model year that multipliers could be applied under HD GHG Phase 2. Some of the commenters opposed any changes to the existing credit multipliers, indicating that the multipliers are necessary for the development of these new and higher-cost technologies into existing and new markets. We considered the concerns and information provided in these comments when developing this proposal, as discussed in Sections II and III. Commenters who would like EPA to further consider in this rulemaking any relevant comments that they provided on the HD2027 NPRM regarding proposed HD vehicle GHG standards for the MYs at issue in this proposal must resubmit those comments to EPA during this proposal's comment period.[29]

EPA believes the increased application of ZEV technologies in the HD sector presents an opportunity to strengthen GHG standards, which can result in significant reductions in heavy-duty vehicle emissions. Based on an in-depth analysis of the potential for the development and application of ZEV technologies in the HD sector, we are proposing in this Phase 3 NPRM more stringent GHG standards for MYs 2027 through 2032 and later HD vehicles heavy-duty vehicles that are appropriate and feasible considering lead time, costs, and other factors. These proposed Phase 3 standards include (1) revised GHG standards for many MY 2027 HD vehicles, with a subset of standards that would not change, and (2) new GHG standards starting in MYs 2028 through 2032, of which the MY 2032 standards would remain in place for MY 2033 and later. For the purposes of this preamble, we refer to the Phase 3 NPRM standards generally as applying to MYs 2027 through 2032 and later HD vehicles. In this NPRM, we are also requesting comment on setting additional new, progressively more stringent GHG standards beyond the MYs proposed and starting in MYs 2033 through 2035. In consideration of concerns from manufacturers about lead time needed for technology development and market investments, we request comment in this NPRM on an alternative set of GHG standards starting in MYs 2027 through 2032 that are lower than those proposed yet still more stringent than the Phase 2 standards. We also request comment, including supporting data and analysis, if there are certain market segments, such as heavy-haul vocational trucks or long-haul tractors which may require significant energy content for their intended use, for which it may be appropriate to set standards less stringent than the alternative for the specific corresponding regulatory subcategories in order to provide additional lead time to develop and introduce ZEV or other low emissions technology for those specific vehicle applications. In consideration of the environmental impacts of HD vehicles and the need for significant emission reductions, as well as the views expressed by stakeholders such as environmental justice communities, environmental nonprofit organizations, and state and local organizations for rapid and aggressive reductions in GHG emissions, we are also requesting comment on a more stringent set of GHG standards starting in MYs 2027 through 2032 whose values would go beyond the proposed standards, such as values that would reflect the level of ZEV adoption (*i.e.,* percent of ZEVs in production volumes) used in California's ACT program, values in between these proposed standards and those that would reflect ZEV adoption levels in ACT, and values beyond those that would reflect ZEV adoption levels in ACT, such as the 50–60 percent ZEV adoption range represented by the publicly stated goals of several major OEMs for 2030.[30] [31] [32] [33] [34]

After considering the state of electrification of the HD market, new incentives, and comments received on the HD2027 NPRM regarding credit multipliers, EPA believes that the HD GHG Phase 2 levels of incentives for electrification are no longer appropriate for certain segments of the HD vehicle market. We are proposing in this document to end credit multipliers for BEVs and PHEVs one year earlier than provided in the existing HD GHG Phase 2 program (*i.e.,* no credit multipliers for BEVs and PHEVs in MYs 2027 and later).

[25] California Air Resources Board, Advanced Clean Trucks Fact Sheet (August 20, 2021), available at *https://ww2.arb.ca.gov/resources/fact-sheets/advanced-clean-trucks-fact-sheet.* See also California Air Resources Board, Final Regulation Order—Advanced Clean Trucks Regulation. Filed March 15, 2021. Available at: *https://ww2.arb.ca.gov/sites/default/files/barcu/regact/2019/act2019/fro2.pdf.*

[26] EPA granted the ACT rule waiver requested by California under CAA section 209(b) on March 30, 2023. 88 FR 20688, April 6, 2023 (signed by the Administrator on March 30, 2023).

[27] Multi-State MOU, available at *https://www.nescaum.org/documents/mhdv-zev-mou-20220329.pdf/.*

[28] U.S. EPA, ''Control of Air Pollution from New Motor Vehicles: Heavy-Duty Engine and Vehicle Standards—Response to Comments.'' Section 28. Docket EPA–HQ–OAR–2019–0055.

[29] Note, comments regarding aspects of the HD program besides those GHG standards and compliance requirements in this proposal are outside the scope of this rulemaking.

[30] California Air Resources Board, Final Regulation Order—Advanced Clean Trucks Regulation. Filed March 15, 2021. Available at: *https://ww2.arb.ca.gov/sites/default/files/barcu/regact/2019/act2019/fro2.pdf.*

[31] Scania, 'Scania's Electrification Roadmap,' Scania Group, November 24, 2021, *https://www.scania.com/group/en/home/newsroom/news/2021/Scanias-electrification-roadmap.html.*

[32] AB Volvo, 'Volvo Trucks Launches Electric Truck with Longer Range,' Volvo Group, January 14, 2022, *https://www.volvogroup.com/en/news-and-media/news/2022/jan/news-4158927.html.*

[33] Deborah Lockridge, 'What Does Daimler Truck Spin-off Mean for North America?,' Trucking Info (November 11, 2021). *https://www.truckinginfo.com/10155922/what-does-daimler-truck-spin-off-mean-for-north-america.*

[34] Navistar presentation at the Advanced Clean Transportation (ACT) Expo, Long Beach, CA (May 9–11, 2022).

C. Summary of the Major Provisions in the Regulatory Action

Our proposed program features several key provisions that include, based on consideration of updated data and information, updating the existing MY 2027 GHG emission standards and promulgating new GHG emission standards starting in MYs 2028 through 2032 for HD vehicles. Specifically, we are proposing to set progressively more stringent GHG emission standards that would apply to MYs 2027, 2028, 2029, 2030, 2031, and 2032 and later for numerous vocational vehicle and tractor subcategories. The proposed standards for MY 2032 and later are shown in Table ES–1 and Table ES–2 and are described in detail in Section II, while the proposed standards for MYs 2027 through 2031 are shown in Section II.F.[35] As described in Section II of this preamble, our analysis shows that the proposed revisions to HD GHG Phase 2 CO_2 standards for MY 2027 and the proposed new, progressively lower numeric values of the CO_2 standards starting in MYs 2028 through 2032 are appropriate considering feasibility, lead time, costs, and other factors. We seek comment on these proposed Phase 3 standards starting in MYs 2027 through 2032.

TABLE ES–1—PROPOSED MY 2032 AND LATER VOCATIONAL VEHICLE CO_2 EMISSION STANDARDS (GRAMS/TON-MILE) BY REGULATORY SUBCATEGORY

	CI light heavy	CI medium heavy	CI heavy heavy	SI light heavy	SI medium heavy
Urban Vehicles	179	176	177	225	215
Multi-Purpose Vehicles	142	153	138	184	186
Regional Vehicles	103	136	97	131	165

Note: Please see Section II.F.4 for the full set of proposed standards, including for optional custom chassis vehicles.

TABLE ES–2—PROPOSED MY 2032 AND LATER TRACTOR CO_2 EMISSION STANDARDS (GRAMS/TON-MILE) BY REGULATORY SUBCATEGORY

	Class 7 all cab styles	Class 8 day cab	Class 8 sleeper cab
Low Roof Tractor	63.5	48.4	48.1
Mid Roof Tractor	68.2	51.5	52.2
High Roof Tractor	66.0	50.0	48.2

Note: Please see Section II.F.4 for the full set of proposed standards, including for heavy-haul tractors.

The proposed standards do not mandate the use of a specific technology, and EPA anticipates that a compliant fleet under the proposed standards would include a diverse range of technologies (*e.g.,* transmission technologies, aerodynamic improvements, engine technologies, battery electric powertrains, hydrogen fuel cell powertrains, etc.). The technologies that have played a fundamental role in meeting the Phase 2 GHG standards will continue to play an important role going forward as they remain key to reducing the GHG emissions of HD vehicles powered by internal combustion engines (referred to in this proposal as ICE vehicles). In developing the proposed standards, EPA has also considered the key issues associated with growth in penetration of zero-emission vehicles, including charging infrastructure and hydrogen production. In our assessment that supports the appropriateness and feasibility of these proposed standards, we developed a technology pathway that could be used to meet each of the standards. The technology package includes a mix of ICE vehicles with CO_2-reducing technologies and ZEVs. EPA developed an analysis tool to evaluate the design features needed to meet the energy and power demands of various HD vehicle types when using ZEV technologies. The overarching analysis is premised on ensuring each of the ZEVs could perform the same work as its ICE counterpart while oversizing the battery to account for its usable range and that batteries deteriorate over time. The fraction of ZEVs in the technology packages are shown in Table ES–3 and described further in Section II of this preamble.

TABLE ES–3—PROJECTED ZEV ADOPTION RATES IN TECHNOLOGY PACKAGES FOR THE PROPOSED STANDARDS

Regulatory subcategory grouping	MY 2027 (%)	MY 2028 (%)	MY 2029 (%)	MY 2030 (%)	MY 2031 (%)	MY 2032 (%)
Light-Heavy Duty Vocational	22	28	34	39	45	57
Medium Heavy-Duty Vocational	19	21	24	27	30	35
Heavy-Heavy-Duty Vocational	16	18	19	30	33	40
Day Cab Tractors	10	12	15	20	30	34
Sleeper Cab Tractors	0	0	0	10	20	25

Note: Please see Section II.F.1 for the full set of technology packages, including for optional custom chassis vehicles.

We are requesting comment on an alternative set of CO_2 standards that would more gradually increase in stringency than the proposed standards starting in MY 2027 through 2032, further described in Section II.H. We developed a technology pathway that could be used to meet the alternatives standards, which projects the aggregated

[35] See proposed regulations 40 CFR 1037.105 and 1037.106.

ZEV adoption rates shown in Table ES–4 and described further in Section II of this preamble. As described in more detail in Section II, we also are seeking comment on setting GHG standards starting in MYs 2027 through 2032 that would reflect values less stringent than the lower stringency alternative for certain market segments as well as comment on values in between the proposed standards and the alternative standards. Also described in Section II, we are seeking comment on setting GHG standards starting in MYs 2027 through 2032 that would reflect values above the level of the proposed standards. Some of the HD2027 NPRM commenters provided specific recommendations for ZEV adoption rates to include in our analysis, and these adoption rates are on the order of 40 percent or more electrification by MY 2029.[36 37 38 39] The California Air Resources Board's (CARB's) ACT regulation sets ZEV sales requirements for vocational vehicles at 40 percent and for tractors at 25 percent in MY 2029 (Table ES–4). Announcements by major manufacturers project their HD ZEV sales to be in the 50 percent range for 2030 globally, with one manufacturer projecting sales as high as 60 percent for North America in that year.[40 41 42 43] We request comment and data that would support more stringent GHG standards than we are proposing for MYs 2027 through 2032, including comment and data on different technologies' penetration rates than we included in the technology packages described in Section II of the preamble. Specifically, EPA requests comment on values that would reflect the level of ZEV adoption used in California's ACT program, values in between these proposed standards and those that would reflect ZEV adoption levels in ACT, and values beyond those that would reflect ZEV adoption levels in ACT such as the 50–60 percent ZEV adoption range represented by the publicly stated goals of several major OEMs for 2030.[44 45 46 47 48] We further request comment on promulgating progressively more stringent standards out through MY 2035.

TABLE ES–4—AGGREGATED PROJECTED ZEV ADOPTION RATES IN TECHNOLOGY PACKAGES FOR THE PROPOSED STANDARDS, AGGREGATED PROJECTED ZEV ADOPTION RATES IN TECHNOLOGY PACKAGES FOR THE ALTERNATIVE STANDARDS, AND CALIFORNIA ACT ZEV SALES REQUIREMENTS

	MY 2027 (%)	MY 2028 (%)	MY 2029 (%)	MY 2030 (%)	MY 2031 (%)	MY 2032 and later (%)
Proposed:						
Vocational	20	25	30	35	40	50
Short-Haul Tractors	10	12	15	20	30	35
Long-Haul Tractors	0	0	0	10	20	25
Alternative:						
Vocational	14	20	25	30	35	40
Short Haul Tractors	5	8	10	15	20	25
Long Haul Tractors	0	0	0	10	15	20
CARB ACT:						
Vocational	20	30	40	50	55	60
Tractors	15	20	25	30	35	40

As discussed in Section II and DRIA Chapters 1 and 2, EPA recognizes that charging and refueling infrastructure for BEVs and FCEVs is critically important for the success in the increasing development and adoption of these vehicle technologies. There are significant efforts already underway to develop and expand heavy-duty electric charging and hydrogen refueling infrastructure. The U.S. government is making large investments through the BIL and the IRA, as discussed in more detail in DRIA Chapter 1.3.2. (*e.g.,* this includes a tax credit for charging or hydrogen refueling infrastructure) as well as billions of additional dollars for programs that could help fund charging infrastructure if purchased alongside an electric vehicle).[49 50] However, private investments will also play a critical role in meeting future infrastructure needs. We expect many BEV or fleet owners to invest in charging infrastructure for depot charging. (See DRIA Chapter 2.6 for information on our analysis of depot charging needs and costs associated with this proposal.) Manufacturers, charging network providers, energy companies and others are also investing

[36] ACEEE Comments to the HD2027 NPRM. See Docket Entry EPA–HQ–OAR–2019–0055–2852–A1. Referencing Catherine Ledna et al., 'Decarbonizing Medium-& Heavy-Duty On-Road Vehicles: Zero-Emission Vehicles Cost Analysis' (NREL, March 2022), *https://www.nrel.gov/docs/fy22osti/82081.pdf.*

[37] EDF Comments to the HD2027 NPRM. See Docket Entry EPA–HQ–OAR–2019–0055–1265–A1, pp. 16–17.

[38] ICCT Comments to the HD2027 NPRM. See Docket Entry EPA–HQ–OAR–2019–0055–1211–A1, p. 6.

[39] Moving Forward Network Comments to the HD2027 NPRM. See Docket Entry EPA–HQ–OAR–2019–0055–1277–A1, pp. 19–20.

[40] Scania, 'Scania's Electrification Roadmap,' Scania Group, November 24, 2021, *https://www.scania.com/group/en/home/newsroom/news/2021/Scanias-electrification-roadmap.html*; AB Volvo, 'Volvo Trucks Launches Electric Truck with Longer Range,' Volvo Group, January 14, 2022, *https://www.volvogroup.com/en/news-and-media/news/2022/jan/news-4158927.html.*

[41] David Cullen, 'Daimler to Offer Carbon Neutral Trucks by 2039,' (October 25, 2019). *https://www.truckinginfo.com/343243/daimler-aims-to-offer-only-co2-neutral-trucks-by-2039-in-key-markets.*

[42] Deborah Lockridge, 'What Does Daimler Truck Spin-off Mean for North America?,' Trucking Info (November 11, 2021). *https://www.truckinginfo.com/10155922/what-does-daimler-truck-spin-off-mean-for-north-america.*

[43] Navistar presentation at the Advanced Clean Transportation (ACT) Expo, Long Beach, CA (May 9–11, 2022).

[44] California Air Resources Board, Final Regulation Order—Advanced Clean Trucks Regulation. Filed March 15, 2021. Available at: *https://ww2.arb.ca.gov/sites/default/files/barcu/regact/2019/act2019/fro2.pdf.*

[45] Scania, 'Scania's Electrification Roadmap,' Scania Group, November 24, 2021, *https://www.scania.com/group/en/home/newsroom/news/2021/Scanias-electrification-roadmap.html.*

[46] AB Volvo, 'Volvo Trucks Launches Electric Truck with Longer Range,' Volvo Group, January 14, 2022, *https://www.volvogroup.com/en/news-and-media/news/2022/jan/news-4158927.html.*

[47] Deborah Lockridge, 'What Does Daimler Truck Spin-off Mean for North America?,' Trucking Info (November 11, 2021). *https://www.truckinginfo.com/10155922/what-does-daimler-truck-spin-off-mean-for-north-america.*

[48] Navistar presentation at the Advanced Clean Transportation (ACT) Expo, Long Beach, CA (May 9–11, 2022).

[49] Inflation Reduction Act, Public Law 117–169 (2022).

[50] Bipartisan Infrastructure Law, Public Law 117–58, 135 Stat. 429 (2021).

in high-power public or other stations that could support en-route charging. This includes over a billion dollars for recently announced projects to support electric truck or other commercial vehicle charging in the United States and Europe.[51] For example, Daimler Truck North America is partnering with electric power generation company NextEra Energy Resources and BlackRock Renewable Power to collectively invest $650 million to create a nationwide U.S. charging network for commercial vehicles with a later phase of the project also supporting hydrogen fueling stations.[52] Volvo Group and Pilot recently announced their intent to offer public charging for medium- and heavy-duty BEVs at over 750 Pilot and Flying J North American truck stops and travel plazas.[53] (See DRIA Chapter 1.6.2 for a more detailed discussion of private investments in heavy-duty infrastructure.)

These recent heavy-duty charging announcements come during a period of rapid growth in the broader market for charging infrastructure serving cars or other electric vehicles. BloombergNEF estimates that annual global investment was $62 billion in 2022, nearly twice that of the prior year.[54] Private charging companies have already attracted billions globally in venture capital and mergers and acquisitions.[55] In the United States, there was $200 million or more in mergers and acquisition activity in 2022 according to the capital market data provider Pitchbook,[56] indicating strong interest in the future of the charging industry. Domestic manufacturing capacity is also increasing with over $600 million in announced investments to support the production of charging equipment and components at existing or new U.S. facilities.[57] [58]

These important early actions and market indicators suggest strong growth in charging and refueling ZEV infrastructure in the coming years. Furthermore, as described in Section II of this document, our analysis of charging infrastructure needs and costs supports the feasibility of the future growth of ZEV technology of the magnitude EPA is projecting in this proposal's technology package. EPA has heard from some representatives from the heavy-duty vehicle manufacturing industry both optimism regarding the heavy-duty industry's ability to produce ZEV technologies in future years at high volume, but also concern that a slow growth in ZEV charging and refueling infrastructure can slow the growth of heavy-duty ZEV adoption, and that this may present challenges for vehicle manufacturers ability to comply with future EPA GHG standards. Several heavy-duty vehicle manufacturers have encouraged EPA to consider ways to address this concern both in the development of the Phase 3 program, and in the structure of the Phase 3 program itself. [59] EPA requests comment on this concern, both in the Phase 3 rulemaking process, and in consideration of whether EPA should consider undertaking any future actions related to the Phase 3 standards, if finalized, with respect to the future growth of the charging and refueling infrastructure for ZEVs. EPA has a vested interest in monitoring industry's performance in complying with mobile source emission standards, including the highway heavy-duty industry. EPA monitors industry's performance through a range of approaches, including regular meetings with individual companies and regulatory requirements for data submission as part of the annual certification process. EPA also provides transparency to the public through actions such as publishing industry compliance reports (such as has been done during the heavy-duty GHG Phase 1 program).[60] EPA requests comment on what, if any, additional information and data EPA should consider collecting and monitoring during the implementation of the Phase 3 standards; we also request comment on whether there are additional stakeholders EPA should work with during implementation of the Phase 3 standards, if finalized, and what measures EPA should consider to help ensure success of the Phase 3 program, including with respect to the important issues of refueling and charging infrastructure for ZEVs.

As described in Section III.B of this preamble, we are also proposing updates to the advanced technology incentives in the ABT program for HD GHG Phase 2 for electric vehicles. Given the ZEV-related factors outlined in this section and further described in Sections I and II that have arisen since the adoption of HD GHG Phase 2, EPA believes it is appropriate to limit the availability of credit multipliers, but we also recognize the role these credits play in developing new markets. We are proposing in this action to eliminate the advanced technology vehicle credit multipliers for BEVs and PHEVs for MY 2027, one year before these credit multipliers were set to end under the existing HD GHG Phase 2 program. We propose retaining the existing FCEV credit multipliers, because the HD market for this technology continues to be in the early stage of development. We request comment on this approach. In addition to this preamble, we have also prepared a Draft Regulatory Impact Analysis (DRIA) which is available on our website and in the public docket for this rulemaking. The DRIA provides additional data, analysis, and discussion. We request comment on the analysis and data in the DRIA.

D. Impacts of the Proposed Standards

Our estimated emission reductions, average per-vehicle costs, program costs, and monetized benefits of the proposed program are summarized in this section and detailed in Sections IV through VIII of the preamble and Chapters 3 through 8 of the DRIA. EPA notes that, consistent with CAA section 202, in

[51] BloombergNEF. ''Zero-Emission Vehicles Factbook A BloombergNEF special report prepared for COP27.'' November 2022. Available online: *https://www.bloomberg.com/professional/download/2022-zero-emissions-vehicle-factbook/*.

[52] NextEra Energy. News Release: ''Daimler Truck North America, NextEra Energy Resources and BlackRock Renewable Power Announce Plans to Accelerate Public Charging Infrastructure for Commercial Vehicles Across The U.S.'' January 31, 2022. Available online: *https://newsroom.nexteraenergy.com/news-releases?item=123840*.

[53] Adler, Alan. ''Pilot and Volvo Group add to public electric charging projects''. FreightWaves. November 16, 2022. Available online: *https://www.freightwaves.com/news/pilot-and-volvo-group-add-to-public-electric-charging-projects*.

[54] BloombergNEF. ''Next $100 Billion EV-Charger Spend to Be Super Fast.'' January 20, 2023. Available online: *https://about.bnef.com/blog/next-100-billion-ev-charger-spend-to-be-super-fast/*.

[55] Hampleton.''Autotech & Mobility M&A market report 1H2023.'' 2023. Available online: *https://www.hampletonpartners.com/fileadmin/user_upload/Report_PDFs/Hampleton-Partners-Autotech-Mobility-Report-1H2023-FINAL.pdf*.

[56] St. John, Alexa, and Nora Naughton.'' Automakers need way more plug-in stations to make their EV plans work. That has sparked a buyer frenzy as big charging players gobble up smaller ones.'' Insider, November 24, 2022. Available online: *https://www.businessinsider.com/ev-charging-industry-merger-acquisition-meet-electric-vehicle-demand-2022-11*.

[57] Joint Office of Energy and Transportation. ''Private Sector Continues to Play Key Part in Accelerating Buildout of EV Charging Networks.'' February 15, 2023. Available online: *https://driveelectric.gov/news/#private-investment*.

[58] North Carolina Office of the Governor. ''Manufacturer of Electric Vehicle Charging Stations Selects Durham County for New Production Facility''. February 7, 2023. Available online: *https://governor.nc.gov/news/press-releases/2023/02/07/manufacturer-electric-vehicle-charging-stations-selects-durham-county-new-production-facility*.

[59] Truck and Engine Manufacturers Association. ''EPA GHG Phase 3 Rulemaking: H–D Vehicle Manufacturers' Perspective'' presentation to the Society of Automotive Engineers Government and Industry Meeting. January 18, 2023.

[60] See EPA Reports EPA–420–R–21–001B covering Model Years 2014–2018, and EPA report EPA–420–R–22–028B covering Model Years 2014—2020, available online at *https://www.epa.gov/compliance-and-fuel-economy-data/epa-heavy-duty-vehicle-and-engine-greenhouse-gas-emissions*.

evaluating potential GHG standards, we carefully weigh the statutory factors, including GHG emissions impacts of the GHG standards, and the feasibility of the standards (including cost of compliance in light of available lead time). We monetize benefits of the proposed GHG standards and evaluate other costs in part to better enable a comparison of costs and benefits pursuant to E.O. 12866, but we recognize that there are benefits that we are currently unable to fully quantify. EPA's consistent practice has been to set standards to achieve improved air quality consistent with CAA section 202, and not to rely on cost-benefit calculations, with their uncertainties and limitations, in identifying the appropriate standards. Nonetheless, our conclusion that the estimated benefits considerably exceed the estimated costs of the proposed program reinforces our view that the proposed GHG standards represent an appropriate weighing of the statutory factors and other relevant considerations.

Our analysis of emissions impacts accounts for downstream emissions, *i.e.,* from emission processes such as engine combustion, engine crankcase exhaust, vehicle evaporative emissions, and vehicle refueling emissions. Vehicle technologies would also affect emissions from upstream sources that occur during, for example, electricity generation and the refining and distribution of fuel. This proposal's analyses include emissions impacts from electrical generating units (EGUs).[61] We also account for refinery emission impacts on non-GHG pollutants in these analyses.

The proposed GHG standards would achieve significant reductions in GHG emissions. As seen in Table ES–5, through 2055 the program would result in significant downstream GHG emission reductions. In addition, considering both downstream and EGU cumulative emissions from calendar years 2027 through 2055, the proposed standards would achieve approximately 1.8 billion metric tons in CO_2 emission reductions (see Section V of the preamble and Chapter 4 of the DRIA for more detail).[62] As discussed in Section VI of this preamble, these GHG emission reductions would make an important contribution to efforts to limit climate change and its anticipated impacts. These GHG reductions would benefit all U.S. residents, including populations such as people of color, low-income populations, indigenous peoples, and/or children that may be especially vulnerable to various forms of damages associated with climate change. We project a cumulative increase from calendar years 2027 through 2055 of approximately 0.4 billion metric tons of CO_2 emissions from EGUs as a result of the increased demand for electricity associated with the proposal, although those projected impacts decrease over time because of projected changes in the future power generation mix, including cleaner combustion technologies and increases in renewables.[63]

TABLE ES–5—CUMULATIVE DOWNSTREAM GHG IMPACTS OF THE PROPOSAL FROM CALENDAR YEARS 2027 THROUGH 2055 IN BILLION METRIC TONS (BMT) [a]

Pollutant	Reduction in BMT	Percent impact (%)
Carbon Dioxide (CO_2)	2.2	−18
Methane (CH_4)	0.00035	−17
Nitrous Oxide (N_2O)	0.00028	−17
CO_2 Equivalent (CO_2e)	*2.3*	*−18*

[a] Downstream emissions processes are those that come directly from a vehicle, such as tailpipe exhaust, crankcase exhaust, evaporative emissions, and refueling emissions.

We expect the proposed GHG emission standards would lead to an increase in HD ZEVs relative to our reference case without the proposed rule, which would also result in reductions of vehicle emissions of non-GHG pollutants that contribute to ambient concentrations of ozone, particulate matter ($PM_{2.5}$), NO_2, CO, and air toxics. Exposure to these non-GHG pollutants is linked to adverse human health impacts such as premature death as well as other adverse public health and environmental effects (see Section VI). As shown in Table ES–6, by 2055, when considering downstream, EGU, and refinery emissions, we estimate a net decrease in emissions from all pollutants modeled (*i.e.,* NO_X, $PM_{2.5}$, VOC, and SO_2). In this year alone, the proposed standards would reduce downstream $PM_{2.5}$ by approximately 970 U.S. tons (about 39 percent of heavy-duty sector downstream $PM_{2.5}$ emissions) and downstream oxides of nitrogen (NO_X) by over 70,000 U.S. tons (about 28 percent of heavy-duty sector downstream NO_X emissions) (see Section V of the preamble and Chapter 4 of the DRIA for more detail). These reductions in non-GHG emissions from vehicles would reduce air pollution near roads. As described in Section VI of this preamble, there is substantial evidence that people who live or attend school near major roadways are more likely to be of a non-White race, Hispanic ethnicity, and/or low socioeconomic status. In addition, emissions from HD vehicles and engines can significantly affect individuals living near truck freight routes. Based on a study EPA conducted of people living near truck routes, an estimated 72 million people live within 200 meters of a truck freight route.[64] Relative to the rest of the population, people of color and those with lower incomes are more likely to live near truck routes.[65] In addition, children who attend school near major roads are disproportionately

[61] We are continuing and are not reopening the existing approach taken in both HD GHG Phase 1 and Phase 2, that compliance with the vehicle exhaust CO_2 emission standards is based on CO_2 emissions from the vehicle.

[62] As discussed in Section V, in this proposal we estimated refinery emissions impacts only for non-GHG emissions. Were we to estimate impacts on refinery GHG emissions, we expect that the decrease in liquid fuel consumption associated with this rule would lead to a reduction in those emissions, and that the total GHG emissions reductions from this proposal (including downstream, EGU, and refinery) would exceed 1.8 billion metric tons.

[63] We expect IRA incentives, particularly sections 45X, 45Y, and 48E of the Internal Revenue Code (*i.e.,* Title 26) added by sections 13502 (Advanced Manufacturing Production Credit), 13701 (Clean Electricity Production Credit), and 13702 (Clean Electricity Investment Credit), respectively, to contribute significantly to increases in renewables in the future power generation mix.

[64] U.S. EPA (2021). Estimation of Population Size and Demographic Characteristics among People Living Near Truck Routes in the Conterminous United States. Memorandum to the Docket EPA–HQ–OAR–2019–0055.

[65] See Section VI.D for additional discussion on our analysis of environmental justice impacts of this NPRM.

represented by children of color and children from low-income households.[66]

Similar to GHG emissions, we project that non-GHG emissions from EGUs would increase as a result of the increased demand for electricity associated with the proposal, and we expect those projected impacts to decrease over time due to EGU regulations and changes in the future power generation mix, including impacts of the IRA. We also project that non-GHG emissions from refineries would decrease as a result of the lower demand for liquid fuel associated with the proposed GHG standards (Section V and DRIA Chapter 4).

TABLE ES–6—PROJECTED NON-GHG HEAVY-DUTY EMISSION IMPACTS [a] IN CALENDAR YEAR 2055 DUE TO THE PROPOSAL

Pollutant	Downstream (U.S short tons)	EGU (U.S. short tons)	Refinery (U.S. short tons)	Net impact (U.S. short tons)
Nitrogen Oxides (NO_X)	−71,000	790	−1,800	−72,000
Primary Exhaust $PM_{2.5}$	−970	750	−440	−650
Volatile Organic Compounds (VOC)	−21,000	750	−1200	−21,000
Sulfur Dioxide (SO_2)	−520	910	−640	−250

[a] We present emissions reductions as negative numbers and emission increases as positive numbers.

We estimate that the present value, at 3 percent, of costs to manufacturers would be $9 billion dollars before considering the IRA battery tax credits. With those battery tax credits, which we estimate to be $3.3 billion, the cost to manufacturers of compliance with the program would be $5.7 billion. The manufacturer cost of compliance with the proposed rule on a per-vehicle basis are shown in Table ES–7. We estimate that the MY 2032 fleet average per-vehicle cost to manufacturers by regulatory group would range between a cost savings for LHD vocational vehicles to $2,300 for HHD vocational vehicles and between $8,000 and $11,400 per tractor. EPA notes the projected costs per vehicle for this proposal are similar to the fleet average per-vehicle costs projected for the HD GHG Phase 2 rule, where the tractor standards were projected to cost between $10,200 and $13,700 per vehicle (81 FR 73621 (October 25, 2016)) and the MY 2027 vocational vehicle standards were projected to cost between $1,486 and $5,670 per vehicle (81 FR 73718 (October 25, 2016)). For this proposal, EPA finds that the expected the additional vehicle costs are reasonable in light of the GHG emissions reductions.[67]

TABLE ES–7—MANUFACTURER COSTS TO MEET THE PROPOSED MY 2032 STANDARDS RELATIVE TO THE REFERENCE CASE

[2021$]

Regulatory group	Incremental ZEV adoption rate in technology package (%)	Per-ZEV manufacturer RPE on average	Fleet-average per-vehicle manufacturer RPE
Light Heavy-Duty Vocational	45	−$9,515	−$4,326
Medium Heavy-Duty Vocational	24	1,358	326
Heavy Heavy-Duty Vocational	28	8,146	2,300
Day Cab Tractors	30	26,364	8,013
Sleeper Cab Tractors	21	54,712	11,445

The proposed GHG standards would reduce adverse impacts associated with climate change and exposure to non-GHG pollutants and thus would yield significant benefits, including those we can monetize and those we are unable to quantify. Table ES–8 summarizes EPA's estimates of total monetized discounted costs, operational savings, and benefits. The results presented here project the monetized environmental and economic impacts associated with the proposed program during each calendar year through 2055. EPA estimates that the present value of monetized net benefits to society would be approximately $320 billion through the year 2055 (annualized net benefits of $17 billion through 2055), more than 5 times the cost in vehicle technology and associated electric vehicle supply equipment (EVSE) combined. Regarding social costs, EPA estimates that the cost of vehicle technology (not including the vehicle or battery tax credits) and EVSE would be approximately $9 billion and $47 billion respectively, and that the HD industry would save approximately $250 billion in operating costs (*e.g.,* savings that come from less liquid fuel used, lower maintenance and repair costs for ZEV technologies as compared to ICE technologies, etc.). The program would result in significant social benefits including $87 billion in climate benefits (with the average SC–GHGs at a 3 percent discount rate). Between $15 and $29 billion of the estimated total benefits through 2055 are attributable to reduced emissions of non-GHG pollutants, primarily those that contribute to ambient concentrations of

[66] Kingsley, S., Eliot, M., Carlson, L. et al. Proximity of U.S. schools to major roadways: a nationwide assessment. J Expo Sci Environ Epidemiol 24, 253–259 (2014). *https://doi.org/10.1038/jes.2014.5.*

[67] For illustrative purposes, these average costs would represent an approximate two percent increase for vocational vehicles and 11 percent increase of tractors if we assume an approximate minimum vehicle price of $100,000 for vocational vehicles and $100,000 for tractors (81 FR 73482). We also note that these average upfront costs are taken across the HD vehicle fleet and are not meant as an indicator of average price increase.

$PM_{2.5}$. Finally, the benefits due to reductions in energy security externalities caused by U.S. petroleum consumption and imports would be approximately $12 billion under the proposed program. A more detailed description and breakdown of these benefits can be found in Section VIII of the preamble and Chapter 7 of the DRIA.

TABLE ES–8—MONETIZED DISCOUNTED COSTS, BENEFITS, AND NET BENEFITS OF THE PROPOSED PROGRAM FOR CALENDAR YEARS 2027 THROUGH 2055

[Billions of 2021 dollars] [a b c d e]

	Present value		Annualized value	
	3% Discount rate	7% Discount rate	3% Discount rate	7% Discount rate
Vehicle Technology Costs	$9	$10	$0.47	$0.82
EVSE Costs	47	29	2.5	2.3
Operational Savings	250	120	13	10
Energy Security Benefits	12	6.0	0.62	0.49
GHG Benefits	87	87	4.6	4.6
Non-GHG Benefits	15 to 29	5.8 to 11	0.78 to 1.5	0.47 to 0.91
Net Benefits	320	180	17	12

Notes:

[a] Values rounded to two significant figures; totals may not sum due to rounding. Present and annualized values are based on the stream of annual calendar year costs and benefits included in the analysis (2027–2055) and discounted back to year 2027.

[b] Climate benefits are based on reductions in CO2, CH4, and N2O emissions and are calculated using four different estimates of the social cost of each GHG (SC–GHG model average at 2.5%, 3%, and 5% discount rates; 95th percentile at 3% discount rate), which each increase over time. In this table, we show the benefits associated with the average SC–GHGs at a 3% discount rate, but the Agency does not have a single central SC–GHG point estimate. We emphasize the importance and value of considering the benefits calculated using all four SC–GHG estimates and present them later in this preamble. As discussed in Chapter 7 of the DRIA, a consideration of climate benefits calculated using discount rates below 3 percent, including 2 percent and lower, is also warranted when discounting intergenerational impacts. We note that in this proposal we are using the SC–GHG estimates presented in the February 2021 Technical Support Document (TSD): Social Cost of Carbon, Methane, and Nitrous Oxide Interim Estimates under E.O. 13990 (IWG 2021). For further discussion of SC–GHG and how EPA accounted for these estimates, please refer to Section VII of this preamble.

[c] The same discount rate used to discount the value of damages from future GHG emissions in this table (SC–GHGs at 3% discount rate) is used to calculate the present and annualized values of climate benefits for internal consistency, while all other costs and benefits are discounted at either 3% or 7%.

[d] Non-GHG health benefits are presented based on two different long-term exposure studies of mortality risk: a Medicare study (Wu et al., 2020) and a National Health Interview Survey study (Pope III et al., 2019). Non-GHG impacts associated with the standards presented here do not include the full complement of health and environmental effects that, if quantified and monetized, would increase the total monetized benefits. Instead, the non-GHG benefits are based on benefit-per-ton values that reflect only human health impacts associated with reductions in $PM_{2.5}$ exposure.

[e] Net benefits reflect the operational savings plus benefits minus costs. For presentational clarity, the present and equivalent annualized value of net benefits for a 3 percent discount rate reflect benefits based on the Pope III et al. study while the present and equivalent annualized value of net benefits for a 7 percent discount rate reflect benefits based on the Wu et al. study.

Regarding the costs to purchasers as shown in Table ES–9, for the proposed program we estimated the average upfront incremental cost to purchase a new MY 2032 HD BEV or FCEV relative to an ICE vehicle for a vocational BEV and EVSE, a short-haul tractor BEV and EVSE, a short-haul tractor FCEV, and a long-haul tractor FCEV. These incremental costs account for the IRA tax credits, specifically battery and vehicle tax credits, as discussed in Section II.E.4 and Section IV.C and IV.D. We also estimated the operational savings each year (*i.e.,* savings that come from the lower costs to operate, maintain, and repair BEV technologies) and payback period (*i.e.,* the year the initial cost increase would pay back). Table ES–9 shows that for the vocational vehicle ZEVs, short-haul tractor ZEVs, and long-haul tractor FCEVs the incremental upfront costs (after the tax credits) are recovered through operational savings such that pay back occurs after between one and three years on average for vocational vehicles, after three years for short-haul tractors and after seven years on average for long-haul tractors. We discuss this in more detail in Sections II and IV of this preamble and DRIA Chapters 2 and 3.

TABLE ES–9—MY 2032 ESTIMATED AVERAGE PER-VEHICLE PURCHASER UPFRONT COST AND ANNUAL SAVINGS DIFFERENCE BETWEEN BEV/FCEV AND ICE TECHNOLOGIES FOR THE PROPOSED PROGRAM

[2021 dollars] [a]

Regulatory group	Upfront vehicle cost difference (including tax credits)	Upfront EVSE costs on average	Total upfront costs on average	Annual incremental operating costs on average	Payback period (year) on average
LHD Vocational	−$9,608	$10,552	$944	−$4,043	1
MHD Vocational	−2,907	14,312	11,405	−5,397	3
HHD Vocational	−8,528	17,233	8,705	−7,436	2
Short Haul (Day Cab) Tractors	582	16,753	17,335	−6,791	3
Long Haul (Sleeper Cab) Tractors	14,712	0	14,712	−2,290	7

[a] Undiscounted dollars.

I. Introduction

A. Brief Overview of the Heavy-Duty Industry

Heavy-duty highway vehicles range from commercial pickup trucks to vocational vehicles that support local and regional transportation, construction, refuse collection, and delivery work, to line-haul tractors (semi trucks) that move freight cross-country. This diverse array of vehicles is categorized into weight classes based on gross vehicle weight ratings (GVWR). These weight classes span Class 2b pickup trucks and vans from 8,500 to 10,000 pounds GVWR through Class 8 line-haul tractors and other commercial vehicles that exceed 33,000 pounds GVWR. While Class 2b and 3 complete pickups and vans are not included in this proposed rulemaking, Class 2b and 3 vocational vehicles are included in this rulemaking (as discussed further in Section III.E.3).[68]

Heavy-duty highway vehicles are powered through an array of different means. Currently, the HD vehicle fleet is primarily powered by diesel-fueled, compression-ignition (CI) engines. However, gasoline-fueled, spark-ignition (SI) engines are common in the lighter weight classes, and smaller numbers of alternative fuel engines (*e.g.,* liquified petroleum gas, compressed natural gas) are found in the heavy-duty fleet. We refer to the vehicles powered by internal combustion engines (ICE, including SI and CI engines) as ICE vehicles throughout this preamble. An increasing number of HD vehicles are powered by zero emission vehicle (ZEV) technologies such as battery electric vehicle (BEV) technology, *e.g.,* EPA certified 380 HD BEVs in MY 2020 but that number jumped to 1,163 HD BEVs in MY 2021. We use the term ZEV technologies throughout the preamble to refer to technologies that result in zero tailpipe emissions, which in this preamble we refer to collectively as ZEVs. Example ZEV technologies include BEVs and fuel cell vehicles (FCEVs). While hybrid vehicles (including plug-in hybrid electric vehicles) include energy storage features such as batteries, they also include an ICE, which do not result in zero tailpipe emissions.

The industry that designs and manufactures HD vehicles is composed of three primary segments: vehicle manufacturers, engine manufacturers and other major component manufacturers, and secondary manufacturers (*i.e.,* body builders). Some vehicle manufacturers are vertically integrated—designing, developing, and testing their engines in-house for use in their vehicles; others purchase some or all of their engines from independent engine suppliers. At the time of this proposal, only one major independent engine manufacturer supports the HD industry, though some vehicle manufacturers sell their engines or ''incomplete vehicles'' (*i.e.,* chassis that include their engines, the frame, and a transmission) to body builders who design and assemble the final vehicle. Each of these subindustries is often supported by common suppliers for subsystems such as transmissions, axles, engine controls, and emission controls.

In addition to the manufacturers and suppliers responsible for producing HD vehicles, an extended network of dealerships, repair and service facilities, and rebuilding facilities contribute to the sale, maintenance, and extended life of these vehicles and engines. HD vehicle dealerships offer customers a place to order such vehicles from a specific manufacturer and often include service facilities for those vehicles and their engines. Dealership service technicians are generally trained to perform regular maintenance and make repairs, which generally include repairs under warranty and in response to manufacturer recalls. Some trucking fleets, businesses, and large municipalities hire their own technicians to service their vehicles in their own facilities. Many refueling centers along major trucking routes have also expanded their facilities to include roadside assistance and service stations to diagnose and repair common problems.

The end-users for HD vehicles are as diverse as the applications for which these vehicles are purchased. Smaller weight class HD vehicles are commonly purchased by delivery services, contractors, and municipalities. The middle weight class vehicles tend to be used as commercial vehicles for business purposes and municipal work that transport people and goods locally and regionally or provide services such as utilities. Vehicles in the heaviest weight classes are generally purchased by businesses with high load demands, such as construction, towing or refuse collection, or freight delivery fleets and owner-operators for regional and long-haul goods movement. The competitive nature of the businesses and owner-operators that purchase and operate HD vehicles means that any time at which the vehicle is unable to operate due to maintenance or repair (*i.e.,* downtime) can lead to a loss in income. The customers' need for reliability drives much of the vehicle manufacturers innovation and research efforts.

B. History of Greenhouse Gas Emission Standards for Heavy-Duty Engines and Vehicles

EPA has a longstanding practice of regulating GHG emissions from the HD sector. In 2009, EPA and the U.S. Department of Transportation's (DOT's) National Highway Traffic Safety Administration (NHTSA) began working on a joint regulatory program to reduce GHG emissions and fuel consumption from HD vehicles and engines.[69] The first phase of the HD GHG and fuel efficiency program was finalized in 2011 (76 FR 57106, September 15, 2011) (''HD GHG Phase 1'').[70] The HD GHG Phase 1 program largely adopted approaches consistent with recommendations from the National Academy of Sciences. The HD GHG Phase 1 program, which began in MY 2014 and phased in through MY 2018, included separate standards for HD vehicles and HD engines. The program offered flexibility allowing manufacturers to attain these standards through a mix of technologies and the option to participate in an emissions credit ABT program.

In 2016, EPA and NHTSA finalized the HD GHG Phase 2 program.[71] The HD GHG Phase 2 program included technology-advancing, performance-based emission standards for HD vehicles and HD engines that phase in over the long term, with initial standards for most vehicles and engines commencing in MY 2021, increasing in stringency in MY 2024, and culminating in even more stringent MY 2027 standards. HD GHG Phase 2 built upon the Phase 1 program and set standards

[68] Class 2b and 3 vehicles with GVWR between 8,500 and 14,000 pounds are primarily commercial pickup trucks and vans and are sometimes referred to as ''medium-duty vehicles''. The vast majority of Class 2b and 3 vehicles are chassis-certified vehicles, and we intend to include those vehicles in a combined light-duty and medium-duty rulemaking action, consistent with E.O. 14037, Section 2a. Heavy-duty engines and vehicles are also used in nonroad applications, such as construction equipment; nonroad heavy-duty engines, equipment, and vehicles are not within the scope of this NPRM.

[69] Greenhouse gas emissions from heavy-duty vehicles are primarily carbon dioxide (CO_2), but also include methane (CH_4), nitrous oxide (N_2O), and hydrofluorocarbons (HFC).

[70] National Research Council; Transportation Research Board. The National Academies' Committee to Assess Fuel Economy Technologies for Medium- and Heavy-Duty Vehicles; ''Technologies and Approaches to Reducing the Fuel Consumption of Medium- and Heavy-Duty Vehicles.'' 2010. Available online: *https://www.nap.edu/catalog/12845/technologies-and-approaches-to-reducing-the-fuel-consumption-of-medium-and-heavy-duty-vehicles.*

[71] 81 FR 73478, October 25, 2016.

based not only on then-currently available technologies, but also on technologies that were either still under development or not yet widely deployed at the time of the HD GHG Phase 2 final rule. To ensure adequate time for technology development, HD GHG Phase 2 provided up to 10 years lead time to allow for the development and phase-in of these control technologies. EPA recently finalized technical amendments to the HD GHG Phase 2 rulemaking (''HD Technical Amendments'') that included changes to the test procedures for heavy-duty engines and vehicles to improve accuracy and reduce testing burden.[72]

As with the previous HD GHG Phase 1 and Phase 2 rules and light-duty GHG rules, EPA has coordinated with the DOT and NHTSA during the development of this proposed rule. This included coordination prior to and during the interagency review conducted under E.O. 12866. EPA has also consulted with CARB during the development of this proposal, as EPA also did during the development of the HD GHG Phase 1 and 2 and light-duty rules. See Section I.E for additional detail on EPA's coordination with DOT/NHTSA, CARB, and additional Federal Agencies.

C. What has changed since we finalized the HD GHG Phase 2 rule?

In 2016, we established the HD GHG Phase 2 CO_2 standards on the premise that zero-emission technologies would not be available and cost-competitive in significant volumes in the timeframe of the HD GHG Phase 2 program but would become more widely available in the HD market over time. To encourage that availability at faster pace, we finalized BEV, PHEV, and FCEV advanced technology credit multipliers for HD vehicles. As described in the Executive Summary and Section II of this preamble, we have considered new data and recent policy changes and we are now projecting that ZEV technologies will be readily available and technologically feasible much sooner than we had projected. We list the developments pointing to this increased application of ZEV technologies again in the following paragraphs (and we discuss their impacts on the HD market in more detail in the Sections I.C.1 through I.C.3):

First, the HD market has evolved such that early ZEV models are in use today for some applications and are expected to expand to many more applications, ZEV technologies costs have gone down and are projected to continue to fall, and manufacturers have announced plans to rapidly increase their investments in ZEV technologies over the next decade. For example, in 2022, several manufacturers are producing fully electric HD vehicles in several applications, and these applications are expected to expand (see Section I.C.1 and DRIA Chapter 1). Furthermore, several HD manufacturers have announced their ZEV projections that signify a rapid increase in BEVs over the next decade. This increase in HD ZEVs is in part due to the significant decrease in cost to manufacture lithium-ion batteries, the single most expensive component of a BEV, in the past decade; those costs are projected to continue to fall during this decade, all while the performance of these batteries in terms of energy density has improved and is projected to continue to improve.[73] [74] Many of the manufacturers who produce HD vehicles and firms that purchase HD vehicles have announced billions of dollars' worth of investments in ZEV technologies and significant plans to transition to a zero-carbon fleet over the next ten to fifteen years.[75]

Second, the 2021 BIL and the 2022 IRA laws have been enacted, and together these two laws provide significant and unprecedented monetary incentives for the production and purchase of ZEVs in the HD market, as well as incentives for electric vehicle charging and hydrogen, which will further support a rapid increase in market penetration of ZEVs.

Third, there have been multiple actions by states to accelerate the adoption of HD ZEVs. The State of California and other states have adopted the ACT program that includes a manufacturer requirement for zero-emission truck sales.[76] [77] The ACT program provides that ''manufacturers who certify Class 2b-8 chassis or complete vehicles with combustion engines would be required to sell zero-emission trucks as an increasing percentage of their annual [state] sales from 2024 to 2035.'' [78] [79] In addition, 17 states and the District of Columbia have signed a Memorandum of Understanding establishing goals to support widespread electrification of the HD vehicle market.[80]

We note that the improvements in internal combustion engine technologies that began under the HD GHG Phase 1 program and are being advanced under the HD GHG Phase 2 standards are still necessary for reducing GHG emissions from the HD sector. As we discuss in Section II.D.1, these technology improvements exist today and we believe they will continue to be feasible during the timeframe at issue in this proposed rulemaking.

1. The HD Zero-Emission Vehicle Market

Since 2012, manufacturers have developed a number of prototype and demonstration HD BEV projects, particularly in the State of California, establishing technological feasibility and durability of BEV technology for specific applications used for specific services, as well as building out necessary infrastructure.[81] In 2019, approximately 60 makes and models of HD BEVs were available for purchase, with additional product lines in prototype or other early development stages.[82] [83] [84] According to the Global

[72] 86 FR 34308, June 29, 2021.

[73] Mulholland, Eamonn. ''Cost of electric commercial vans and pickup trucks in the United States through 2040.'' Page 7. January 2022. Available at *https://theicct.org/wp-content/uploads/2022/01/cost-ev-vans-pickups-us-2040-jan22.pdf.*

[74] Environmental Defense Fund. ''Technical Review of Medium- and Heavy-Duty Electrification Costs for 2027–2030.'' February 2, 2022. Available online at: *https://blogs.edf.org/climate411/files/2022/02/EDF-MDHD-Electrification-v1.6_20220209.pdf.*

[75] Environmental Defense Fund (2022) Electric Vehicle Market Update: Manufacturer Commitments and Public Policy Initiatives Supporting Electric Mobility in the U.S. and Worldwide, September 2022, available online at: *https://blogs.edf.org/climate411/files/2022/09/ERM-EDF-Electric-Vehicle-Market-Report_September2022.pdf.*

[76] California Air Resources Board, Final Regulation Order—Advanced Clean Trucks Regulation. Filed March 15, 2021. Available at: *https://ww2.arb.ca.gov/sites/default/files/barcu/regact/2019/act2019/fro2.pdf.*

[77] Oregon adopted ACT on 11/17/2021: *https://www.oregon.gov/deq/rulemaking/Pages/ctr2021.aspx.* Washington adopted ACT on 11/29/2021: *https://ecology.wa.gov/Regulations-Permits/Laws-rules-rulemaking/Rulemaking/WAC-173-423-400.* New York adopted ACT on 12/29/2021: *https://www.dec.ny.gov/regulations/26402.html.* New Jersey adopted ACT on 12/20/2021: *https://www.nj.gov/dep/rules/adoptions.html.* Massachusetts adopted ACT on 12/30/2021: *https://www.mass.gov/regulations/310-CMR-700-air-pollution-control#proposed-amendments-public-comment.*

[78] California Air Resources Board, Advanced Clean Trucks Fact Sheet (August 20, 2021), available at *https://ww2.arb.ca.gov/resources/fact-sheets/advanced-clean-trucks-fact-sheet.* See also California Air Resources Board, Final Regulation Order—Advanced Clean Trucks Regulation. Filed March 15, 2021. Available at: *https://ww2.arb.ca.gov/sites/default/files/barcu/regact/2019/act2019/fro2.pdf.*

[79] EPA granted the ACT rule waiver requested by California under CAA section 209(b) on March 30, 2023.

[80] Multi-State MOU, available at *https://www.nescaum.org/documents/mhdv-zev-mou-20220329.pdf/.*

[81] NACFE (2019) ''Guidance Report: Viable Class 7/8 Electric, Hybrid and Alternative Fuel Tractors'', available online at: *https://nacfe.org/downloads/viable-class-7-8-alternative-vehicles/.*

[82] Nadel, S. and Junga, E. (2020). ''Electrifying Trucks: From Delivery Vans to Buses to 18-

Continued

Commercial Vehicle Drive to Zero Zero-Emission Technology Inventory (ZETI), 160 BEV models were commercially available on the market in the United States and Canada region in 2021, and around 200 BEV models are projected to be available by 2024.[85] DRIA Chapter 1 provides a snapshot of BEV models in the HD vehicle market.

Current production volumes of HD BEVs originally started increasing in the transit bus market, where electric bus sales grew from 300 to 650 in the United States between 2018 to 2019.[86] [87] In 2020, the market continued to expand beyond transit, with approximately 900 HD BEVs sold in the United States and Canada combined, consisting of transit buses (54 percent), school buses (33 percent), and straight trucks (13 percent).[88] By 2021, M.J. Bradley's analysis of the HD BEV market found that 30 manufacturers had at least one BEV model for sale and an additional nine companies had made announcements to begin BEV production by 2025.[89] In April 2022, the Environmental Defense Fund (EDF) projected deployments and major orders of electric trucks and buses in the United States to rise to 54,000 by 2025 based on an analysis of formal statements and announcements by auto manufacturers, as well as analysis of the automotive press and data from financial and market analysis firms that regularly cover the auto industry.[90] Given the dynamic nature of the BEV market, the number and types of vehicles available are increasing fairly rapidly.[91]

The current market for HD FCEVs is not as developed as the market for HD BEVs, but models are being designed, tested, and readied for purchase in the coming years. According to ZETI,[92] at least 16 HD FCEV models are expected to become commercially available for production in the United States and Canada region by 2024, as listed in DRIA Chapter 1. The Hydrogen Fuel Cell Partnership reports that fuel cell electric buses have been in commercial development for 20 years and, as of May 2020, over 100 buses are in operation or in planning in the United States.[93] Foothill Transit in Los Angeles County ordered 33 transit buses that they expect to be operating in early 2023.[94] Ten Toyota-Kenworth Class 8 fuel cell tractors were successfully tested in the Port of Los Angeles and surrounding area through 2022.[95] Hyundai is scheduled to test 30 Class 8 tractors in the Port of Oakland in 2023.[96] Nikola has agreements with fleets to purchase or lease over 200 Class 8 trucks upon satisfactory completion of demonstrations[97] [98] [99] and is building a manufacturing facility in Coolidge, Arizona, with an expected production capacity of up to 20,000 BEV and FCEV trucks by the end of 2023.[100]

For this proposed rulemaking, EPA conducted an analysis of manufacturer-supplied end-of-year production reports provided to us as a requirement of the process to certify HD vehicles to our GHG emission standards.[101] Based on the end-of-year production reports for MY 2019, manufacturers produced approximately 350 certified HD BEVs. This is out of nearly 615,000 HD diesel ICE vehicles produced in MY 2019 and represents approximately 0.06 percent of the HD vehicles market. In MY 2020, 380 HD BEVs were certified, an increase of 30 BEVs from 2019. The BEVs were certified in a variety of the Phase 1 vehicle subcategories, including light, medium, and heavy heavy-duty vocational vehicles and vocational tractors. Out of the 380 HD BEVs certified in MY 2020, a total of 177 unique makes and models were available for purchase by 52 manufacturers in Classes 3–8. In MY 2021, EPA certified 1,163 heavy-duty BEVs, representing 0.2 percent of the HD vehicles. There were no HD FCEVs certified through MY 2021. We note that these HD BEV certifications preceded implementation of incentives in the 2022 IRA, which we expect to increase adoption (and certification) of BEV and FCEV technology in the heavy-duty sector.

Based on current trends, manufacturer announcements, the 2021 BIL and 2022 IRA, and state-level actions, electrification of the HD market is

Wheelers.'' American Council for an Energy-Efficient Economy White Paper, available at: *https://aceee.org/white-paper/electrifying-trucks-delivery-vans-buses-18*.

[83] The composition of all-electric truck models was: 36 buses, 10 vocational trucks, 9 step vans, 3 tractors, 2 street sweepers, and 1 refuse truck (Nadel and Junga (2020) citing AFDC (Alternative Fuels Data Center). 2018. ''Average Annual Vehicle Miles Traveled by Major Vehicle Categories.'' *www.afdc.energy.gov/data/widgets/10309*.

[84] Note that there are varying estimates of BEV and FCEV models in the market; NACFE (2019) ''Guidance Report: Viable Class 7/8 Electric, Hybrid and Alternative Fuel Tractors'', available at: *https://nacfe.org/downloads/viable-class-7-8-alternative-vehicles/*. (NACFE 2019) provided slightly lower estimates than those included here from Nadel and Junga 2020. A recent NREL study suggests that there may be more models available, but it is unclear how many are no longer on the market since the inventory includes vehicles introduced and used in commerce starting in 2012 (Smith et al. 2019).

[85] Global Commercial Vehicle Drive to Zero. ''ZETI Data Explorer''. CALSTART. Version 1.1, accessed February 2023. Available online: *https://globaldrivetozero.org/tools/zeti-data-explorer/*.

[86] Tigue, K. (2019) ''U.S. Electric Bus Demand Outpaces Production as Cities Add to Their Fleets'' Inside Climate News, November 14. *https://insideclimatenews.org/news/14112019/electric-bus-cost-savings-health-fuel-charging*.

[87] Note that ICCT (2020) estimates 440 electric buses were sold in the U.S. and Canada in 2019, with 10 of those products being FCEV pilots. The difference in estimates of number of electric buses available in the U.S. may lie in different sources looking at production vs. sales of units.

[88] International Council on Clean Transportation. ''Fact Sheet: Zero-Emission Bus and Truck Market in the United States and Canada: A 2020 Update.'' Pages 3–4. May 2021.

[89] M.J. Bradley and Associates (2021) ''Medium- and Heavy-Duty Vehicles: Market Structure, Environmental Impact, and EV Readiness.'' Page 21. July 2021.

[90] Environmental Defense Fund. ''Electric Vehicle Market Update: Manufacturer Commitments and Public Policy Initiatives Supporting Electric Mobility in the U.S. and Worldwide''. April 2022. Available online: *https://blogs.edf.org/climate411/files/2022/04/electric_vehicle_market_report_v6_april2022.pdf*.

[91] Union of Concerned Scientists (2019) ''Ready for Work: Now Is the Time for Heavy-Duty Electric Vehicles,'' available at *www.ucsusa.org/resources/ready-work*.

[92] Global Commercial Vehicle Drive to Zero. ''ZETI (Zero-Emission Technology Inventory)''. CALSTART. Version 8.0, accessed November 2022. Available online: *https://globaldrivetozero.org/tools/zeti/*.

[93] Hydrogen Fuel Cell Partnership. ''Buses & Trucks''. Available online: *https://h2fcp.org/buses_trucks*.

[94] Scauzillo, Steve. ''First hydrogen-powered transit bus in LA County hits streets in December, starting new trend''. San Gabriel Valley Tribune. November 22, 2022. Available online: *https://ourcommunitynow.com/post/first-hydrogen-powered-transit-bus-in-la-county-hits-streets-in-december-starting-new-trend*.

[95] Heavy Duty Trucking. ''FCEV Drayage Trucks Prove Themselves in LA Port Demonstration Project.'' HDT Truckinginfo. September 22, 2022. Available online: *https://www.truckinginfo.com/10181655/fcev-drayage-trucks-prove-themselves-in-la-port-demonstration-project*.

[96] Hyundai. ''Hyundai Motors Details Plans to Expand into U.S. Market with Hydrogen-powered XCIENT Fuel Cells at ACT Expo.'' May 10, 2022. Available online: *https://www.hyundai.com/worldwide/en/company/newsroom/hyundai-motor-details-plans-to-expand-into-u.s.-market-with-hydrogen-powered-xcient-fuel-cells-at-act-expo-0000016825*.

[97] Heavy Duty Trucking. ''Pennsylvania Flatbed Carrier to Lease 100 Nikola Tre FCEVs.'' HDT Truckinginfo. October 14, 2021. Available online: *https://www.truckinginfo.com/10153974/pennsylvania-flatbed-carrier-to-lease-100-nikola-tre-evs*.

[98] Green Car Congress. ''Covenant Logistics Group signs letter of intent for 10 Nikola Tre BEVs and 40 Tre FCEVs.'' January 12, 2022. Available online: *https://www.greencarcongress.com/2022/01/20220112-covenant.html*.

[99] Adler, Alan. ''Plug Power will buy up to 75 Nikola fuel cell trucks.'' Freightwaves. December 15, 2022. Available online; *https://www.freightwaves.com/news/plug-power-will-buy-up-to-75-nikola-fuel-cell-trucks*.

[100] Nikola. ''Nikola Corportation Celebrates the Customer Launch of Serial Production in Coolidge, Arizona.'' April 27, 2022. Available online: *https://nikolamotor.com/press_releases/nikola-corporation-celebrates-the-customer-launch-of-serial-production-in-coolidge-arizona-163#:~:text=Phase%201%20of%20the%20Coolidge,per%20year%20on%20two%20shifts*.

[101] Memo to Docket. Heavy-Duty Greenhouse Gas Emissions Certification Data. March 2023. Docket EPA–HQ–OAR–2022–0985.

expected to substantially increase over the next decade from current levels. The projected rate of growth in electrification of the HD vehicle sector currently varies widely. After passage of the IRA, EDF's September 2022 report update projected deployments and major orders of electric trucks and buses to rise to 166,000 by the end of 2022.[102] ERM updated an analysis for EDF that projected five scenarios that span a range of between 13 and 48 percent Class 4–8 ZEV sales in 2029, with an average of 29 percent.[103] The International Council for Clean Transportation (ICCT) and Energy Innovation conducted an analysis of the impact of the IRA on electric vehicle uptake, projecting between 39 and 48 percent Class 4–8 ZEV sales in 2030 across three scenarios and between 47 and 56 percent in 2035.[104]

One of the most important factors influencing the extent to which BEVs are available for purchase and able to enter the market is the cost of lithium-ion batteries, the single most expensive component of a BEV. According to Bloomberg New Energy Finance, average lithium-ion battery costs have decreased by more than 85 percent since 2010, primarily due to global investments in battery production and ongoing improvements in battery technology.[105] A number of studies, including the Sharpe and Basma meta-study of direct manufacturing costs from a variety of papers, show that battery pack costs are projected to continue to fall during this decade.[106] [107] [108] Cost reductions in battery packs for electric trucks are anticipated due to continued improvement of cell and battery pack performance and advancements in technology associated with energy density, materials for cells, and battery packaging and integration.[109]

Currently, the fuel cell stack is the most expensive component of a HD FCEV, due primarily to the technological requirements of manufacturing rather than raw material costs.[110] Projected costs are expected to decrease as manufacturing matures and materials improve.[111] Larger production volumes are anticipated as global demand increases for fuel cell systems for HD vehicles, which would improve economies of scale.[112] Costs of the onboard hydrogen storage tank, another component unique to a FCEV, are also projected to drop due to lighter weight and lower cost carbon fiber-reinforced materials, technology improvements, and economies of scale.[113]

As the cost of components has come down, manufacturers have increasingly announced their projections for zero-emission HD vehicles, and these projections signify a rapid increase in BEVs and FCEVs over the next decade. For example, Volvo Trucks and Scania announced a global electrification target of 50 percent of trucks sold being electric by 2030.[114] Daimler Trucks North America has committed to offering only what they refer to as ''carbon-neutral'' trucks in the United States. by 2039 and expects that by 2030 as much as 60 percent of its sales will be ZEVs.[115] [116] Navistar has a goal of having 50 percent of its sales volume be ZEVs by 2030, and it has committed to achieve 100 percent zero emissions by 2040.[117] Cummins targets net-zero carbon emissions by 2050.[118] [119]

On a parallel path, large private HD fleet owners are also increasingly committing to expanding their electric fleets.[120] A report by the International Energy Agency (IEA) provides a comprehensive accounting of recent announcements made by UPS, FedEx, DHL, Walmart, Anheuser-Busch, Amazon, and PepsiCo for fleet electrification.[121] Amazon and UPS, for example, placed orders in 2020 for 10,000 BEV delivery vans from EV start-ups Rivian and Arrival, respectively, and Amazon has plans to scale up to 100,000 BEV vans by 2030.[122] [123]

[102] Environmental Defense Fund. ''Electric Vehicle Market Update: Manufacturer Commitments and Public Policy Initiatives Supporting Electric Mobility in the U.S. and Worldwide''. September 2022. Available online: *https://blogs.edf.org/climate411/files/2022/09/ERM-EDF-Electric-Vehicle-Market-Report_September2022.pdf*.

[103] Robo, Ellen and Dave Seamonds. Technical Memo to Environmental Defense Fund: Investment Reduction Act Supplemental Assessment: Analysis of Alternative Medium- and Heavy-Duty Zero-Emission Vehicle Business-As-Usual Scenarios. ERM. August 19, 2022. Available online: *https://www.erm.com/contentassets/154d08e0d0674752925cd82c66b3e2b1/edf-zev-baseline-technical-memo-addendum.pdf*.

[104] ICCT and Energy Innovation. ''Analyzing the Impact of the Inflation Reduction Act on Electric Vehicle Uptake in the United States''. January 2023. Available online: *https://theicct.org/wp-content/uploads/2023/01/ira-impact-evs-us-jan23-2.pdf*.

[105] Bloomberg. ''Battery Pack Prices Cited Below $100/kWh for the First Time in 2020, While Market Average Sits at $137/kWh''. Available online: *https://about.bnef.com/blog/battery-pack-prices-cited-below-100-kwh-for-the-first-time-in-2020-while-market-average-sits-at-137-kwh/*.

[106] Mulholland, Eamonn. ''Cost of electric commercial vans and pickup trucks in the United States through 2040.'' Page 7. January 2022. Available at *https://theicct.org/wp-content/uploads/2022/01/cost-ev-vans-pickups-us-2040-jan22.pdf*.

[107] Environmental Defense Fund. ''Technical Review of Medium- and Heavy-Duty Electrification Costs for 2027–2030.'' February 2, 2022. Available online: *https://blogs.edf.org/climate411/files/2022/02/EDF-MDHD-Electrification-v1.6_20220209.pdf*.

[108] Sharpe, Ben and Hussein Basma. ''A meta-study of purchase costs for zero-emission trucks''. The International Council on Clean Transportation, Working Paper 2022–09 (February 2022). Available online: *https://theicct.org/wp-content/uploads/2022/02/purchase-cost-ze-trucks-feb22-1.pdf*.

[109] Sharpe, Ben and Hussein Basma. ''A meta-study of purchase costs for zero-emission trucks''. The International Council on Clean Transportation. *https://theicct.org/wp-content/uploads/2022/02/purchase-cost-ze-trucks-feb22-1.pdf*.

[110] Deloitte China. ''Fueling the Future of Mobility: Hydrogen and fuel cell solutions for transportation, Volume 1''. 2020. Available online: *https://www2.deloitte.com/content/dam/Deloitte/cn/Documents/finance/deloitte-cn-fueling-the-future-of-mobility-en-200101.pdf*.

[111] Sharpe, Ben and Hussein Basma. ''A Meta-Study of Purchase Costs for Zero-Emission Trucks''. The International Council on Clean Transportation. February 2022. Available online: *https://theicct.org/wp-content/uploads/2022/02/purchase-cost-ze-trucks-feb22-1.pdf*.

[112] Deloitte China. ''Fueling the Future of Mobility: Hydrogen and fuel cell solutions for transportation, Volume 1''. 2020. Available online: *https://www2.deloitte.com/content/dam/Deloitte/cn/Documents/finance/deloitte-cn-fueling-the-future-of-mobility-en-200101.pdf*.

[113] *Ibid*.

[114] Scania, 'Scania's Electrification Roadmap,' Scania Group, November 24, 2021, *https://www.scania.com/group/en/home/newsroom/news/2021/Scanias-electrification-roadmap.html*; AB Volvo, 'Volvo Trucks Launches Electric Truck with Longer Range,' Volvo Group, January 14, 2022, *https://www.volvogroup.com/en/news-and-media/news/2022/jan/news-4158927.html*.

[115] David Cullen, 'Daimler to Offer Carbon Neutral Trucks by 2039,' (October 25, 2019). *https://www.truckinginfo.com/343243/daimler-aims-to-offer-only-co2-neutral-trucks-by-2039-in-key-markets*.

[116] Deborah Lockridge, 'What Does Daimler Truck Spin-off Mean for North America?,' Trucking Info (November 11, 2021). *https://www.truckinginfo.com/10155922/what-does-daimler-truck-spin-off-mean-for-north-america*.

[117] Navistar presentation at the Advanced Clean Transportation (ACT) Expo, Long Beach, CA (May 9–11, 2022).

[118] Cummins, Inc. ''Cummins Unveils New Environmental Sustainability Strategy to Address Climate Change, Conserve Natural Resources.'' November 14, 2019. Last accessed on September 10, 2021 at *https://www.cummins.com/news/releases/2019/11/14/cummins-unveils-new-environmental-sustainability-strategy-address-climate*.

[119] Environmental Defense Fund (2022) September 2022 Electric Vehicle Market Update: Manufacturer Commitments and Public Policy Initiatives Supporting Electric Mobility in the U.S. and Worldwide, available online at: *https://blogs.edf.org/climate411/files/2022/09/ERM-EDF-Electric-Vehicle-Market-Report_September2022.pdf*.

[120] Environmental Defense Fund (2021) EDF analysis finds American fleets are embracing electric trucks. July 28, 2021. Available online at: *https://blogs.edf.org/energyexchange/2021/07/28/edf-analysis-finds-american-fleets-are-embracing-electric-trucks/*.

[121] International Energy Association. Global EV Outlook 2021. April 2021. Available online at: *https://iea.blob.core.windows.net/assets/ed5f4484-f556-4110-8c5c-4ede8bcba637/GlobalEVOutlook2021.pdf*.

[122] Amazon, Inc. ''Introducing Amazon's first custom electric delivery vehicle.'' October 8, 2020. Last accessed on October 18, 2022 at *https://www.aboutamazon.com/news/transportation/introducing-amazons-first-custom-electric-delivery-vehicle*.

[123] Arrival Ltd. ''UPS invests in Arrival and orders 10,000 Generation 2 Electric Vehicles.'' April 24, 2020. Last accessed on October 18, 2022 at

Continued

Likewise, in December 2022, PepsiCo added the first of 100 planned Tesla Semis to its fleet.[124] These announcements include not only orders for electric delivery vans and semi-trucks, but more specific targets and dates to full electrification or net-zero emissions. Amazon, FedEx, DHL, and Walmart have set a commitment to fleet electrification and/or achieving net-zero emissions by 2040.[125] [126] [127] [128] We recognize that certain delivery vans will likely fall into the Class 2b and 3 regulatory category, the vast majority of which are not covered in this rule's proposed updates; we intend to address this category in a separate light and medium-duty vehicle rulemaking.[129]

Amazon and Walmart are among fleets owners and operators that are also considering hydrogen. Amazon signed an agreement with Plug Power,[130] a company building an end-to-end hydrogen ecosystem, to supply hydrogen for up to 800 HD long-haul trucks or 30,000 forklifts (which are commonly powered using hydrogen) starting in 2025 through 2040.[131] Walmart is purchasing hydrogen from Plug Power [132] and plans to expand pilots of fuel cell forklifts, yard trucks, and possibly HD long-haul trucks by 2040.[133] Plug Power has agreed to purchase up to 75 Nikola Class 8 fuel cell trucks over the next three years in exchange for supplying the company with hydrogen fuel.[134]

The lifetime total cost of ownership (TCO), which includes maintenance and fuel costs, is likely a primary factor for HD vehicle and fleet owners considering BEV and FCEV purchases. In fact, a 2018 survey of fleet owners showed ''lower cost of ownership'' as the second most important motivator for electrifying their fleet.[135] An ICCT analysis from 2019 suggests that TCO for light and medium heavy-duty BEVs could reach cost parity with comparable diesel ICE vehicles in the early 2020s, while heavy HD BEVs and FCEVs are likely to reach cost parity with comparable diesel ICE vehicles closer to the 2030 timeframe.[136] Recent findings from Phadke et al. suggest that BEV TCO could be 13 percent less than that of a comparable diesel ICE vehicle if electricity pricing is optimized.[137] These studies do not consider the IRA. The Rocky Mountain Institute found that because of the IRA, the TCO of electric trucks will be lower than the TCO of comparable diesel trucks about five years faster than without the IRA. They expect cost parity as soon as 2023 for urban and regional duty cycles that travel up to 250 miles and 2027 for long-hauls that travel over 250 miles.[138]

As the ICCT and Phadke et al. studies suggest, fuel costs are an important part of TCO. While assumptions about vehicle weight and size can make direct comparisons between HD ZEVs and ICE vehicles challenging, data show greater energy efficiency of battery-electric and fuel cell technology relative to ICE technologies.[139] [140] Better energy efficiency leads to lower electricity or hydrogen fuel costs for ZEVs relative to ICE fuel costs.[141] [142] Maintenance and service costs are also an important component within TCO; although there is limited data available on actual maintenance costs for HD ZEVs, early experience with BEV medium HD vehicles and transit buses suggests the potential for lower maintenance costs after an initial period of learning to refine both component durability and maintenance procedures.[143] We expect similar trends for FCEVs, as discussed in Chapter 2 of the DRIA. To facilitate HD fleets transitioning to ZEVs, some manufacturers are currently including maintenance in leasing agreements with fleets; it is unclear the extent to which a full-service leasing model will persist or will be transitioned to a more

https://arrival.com/us/en/news/ups-invests-in-arrival-and-orders-10000-generation-2-electric-vehicles.

[124] Akash Sriram. ''Musk delivers first Tesla truck, but no update on output, pricing.'' Reuters. December 2, 2022. Last accessed on January 4, 2023 at *https://www.reuters.com/business/autos-transportation/musk-delivers-first-tesla-semi-trucks-2022-12-02/.*

[125] Robo, Ellen and Dave Seamonds. Technical Memo to Environmental Defense Fund: Investment Reduction Act Supplemental Assessment: Analysis of Alternative Medium- and Heavy-Duty Zero-Emission Vehicle Business-As-Usual Scenarios. ERM. August 19, 2022. Available online: *https://www.erm.com/contentassets/154d08e0d0674752925cd82c66b3e2b1/edf-zev-baseline-technical-memo-addendum.pdf.*

[126] FedEx Corp. ''FedEx Commits to Carbon-Neutral Operations by 2040.'' March 3, 2021. Last accessed on October 18, 2022 at *https://newsroom.fedex.com/newsroom/asia-english/sustainability2021.*

[127] Deutsche Post DHL Group. ''Zero emissions by 2050: DHL announces ambitious new environmental protection target.'' March 2017. Last accessed on October 18, 2022 at *https://www.dhl.com/global-en/delivered/sustainability/zero-emissions-by-2050.html.*

[128] Walmart Inc. ''Walmart Sets Goal to Become a Regenerative Company.'' September 21, 2020. Last accessed on October 18, 2022 at *https://corporate.walmart.com/newsroom/2020/09/21/walmart-sets-goal-to-become-a-regenerative-company.*

[129] Complete heavy-duty vehicles at or below 14,000 pounds. GVWR are chassis-certified under 40 CFR part 86, while incomplete vehicles at or below 14,000 pounds. GVWR may be certified to either 40 CFR part 86 (meeting standards under subpart S) or 40 CFR part 1037 (installed engines would then need to be certified under 40 CFR part 1036). Class 2b and 3 vehicles are primarily chassis-certified complete commercial pickup trucks and vans. We intend to pursue a combined light-duty and medium-duty rulemaking to set more stringent standards for complete and incomplete vehicles at or below 14,000 pounds. GVWR that are certified under 40 CFR part 86, subpart S. The standards proposed in this rule would apply for all heavy-duty vehicles above 14,000 pounds. GVWR, except as noted in 40 CFR 1037.150(l). The proposed standards in this rule would also apply for incomplete heavy-duty vehicles at or below 14,000 pounds. GVWR if vehicle manufacturers opt to certify those vehicles under 40 CFR part 1037 instead of certifying under 40 CFR part 86, subpart S.

[130] Plug Power. ''Plug and Amazon Sign Green Hydrogen Agreement''. Available online: *https://www.ir.plugpower.com/press-releases/news-details/2022/Plug-and-Amazon-Sign-Green-Hydrogen-Agreement/default.aspx.*

[131] Amazon. ''Amazon adopts green hydrogen to help decarbonize its operations''. August 25, 2022. Available online: *https://www.aboutamazon.com/news/sustainability/amazon-adopts-green-hydrogen-to-help-decarbonize-its-operations.*

[132] Plug Power. ''Plug Supplies Walmart with Green Hydrogen to Fuel Retailer's Fleet of Material Handling Lift Trucks''. April 19, 2022. Available online: *https://www.ir.plugpower.com/press-releases/news-details/2022/Plug-Supplies-Walmart-with-Green-Hydrogen-to-Fuel-Retailers-Fleet-of-Material-Handling-Lift-Trucks/default.aspx.*

[133] Proactive. ''WalMart eyes benefits of hydrogen delivery vehicles in wider trials''. Proactive 13:17. June 8, 2022. Available online: *https://www.proactiveinvestors.co.uk/companies/news/984360/walmart-eyes-benefits-of-hydrogen-delivery-vehicles-in-wider-trials-984360.html.*

[134] Adler, Alan. ''Plug Power will buy up to 75 Nikola fuel cell trucks''. Freightwaves. December 15, 2022. Available online: *https://www.freightwaves.com/news/plug-power-will-buy-up-to-75-nikola-fuel-cell-trucks.*

[135] The primary motivator for fleet managers was ''Sustainability and environmental goals''; the survey was conducted by UPS and GreenBiz.

[136] ICCT (2019) ''Estimating the infrastructure needs and costs for the launch of zero-emissions trucks''; available online at: *https://theicct.org/publications/zero-emission-truck-infrastructure.*

[137] Phadke, A., et. al. (2021) ''Why Regional and Long-Haul Trucks are Primed for Electrification Now''; available online at: *https://eta-publications.lbl.gov/sites/default/files/updated_5_final_ehdv_report_033121.pdf.*

[138] Kahn, Ari, et. al. ''The Inflation Reduction Act Will Help Electrify Heavy-Duty Trucking''. Rocky Mountain Institute. August 25, 2022. Available online: *https://rmi.org/inflation-reduction-act-will-help-electrify-heavy-duty-trucking/.*

[139] NACFE (2019) ''Guidance Report: Viable Class 7/8 Electric, Hybrid and Alternative Fuel Tractors'', available online at: *https://nacfe.org/downloads/viable-class-7-8-alternative-vehicles/.*

[140] Nadel, S. and Junga, E. (2020) ''Electrifying Trucks: From Delivery Vans to Buses to 18-Wheelers''. American Council for an Energy-Efficient Economy White Paper, available online at: *https://aceee.org/white-paper/electrifying-trucks-delivery-vans-buses-18.*

[141] NACFE (2019) ''Guidance Report: Viable Class 7/8 Electric, Hybrid and Alternative Fuel Tractors'', available online at: *https://nacfe.org/downloads/viable-class-7-8-alternative-vehicles/.*

[142] Nadel, S. and Junga, E. (2020) ''Electrifying Trucks: From Delivery Vans to Buses to 18-Wheelers''. American Council for an Energy-Efficient Economy White Paper, available online at: *https://aceee.org/white-paper/electrifying-trucks-delivery-vans-buses-18.*

[143] U.S. Department of Energy Alternative Fuels Data Center (AFDC), ''Developing Infrastructure to Charge Plug-In Electric Vehicles'', *https://afdc.energy.gov/fuels/electricity_infrastructure.html* (accessed 2–27–20).

traditional purchase model after an initial period of learning.[144 145]

The growth in incentive programs will continue to play an important role in the HD ZEV market. For example, as discussed in more detail in this section, FHWA-approved plans providing $1.5 billion in funding for expanding charging on over 75,000 miles of highway encourages states to consider station designs and power levels that could support heavy-duty vehicles. In a 2017 survey of fleet managers, upfront purchase price was listed as the primary barrier to HD fleet electrification. This suggests that federal incentive programs like those in the BIL and IRA (discussed in Section I.C.2) to offset ZEV purchase costs, as well as state and local incentives and investments, can be influential in the near term, with improvements in BEV and FCEV component costs playing an increasing role in reducing costs in the longer term.[146 147] For example, BEV incentive programs for transit and school buses have experienced growth and are projected to continue to influence BEV markets. The Los Angeles Department of Transportation (LADOT) is one of the first transit organizations in the country to develop a program committed to transitioning its transit fleets to ZEVs by 2030—a target that is 10 years sooner than CARB's Innovative Clean Transportation (ICT) regulation requiring all public transit to be electric by 2040.[148] Since these announcements, LADOT has purchased 27 BEV transit and school buses from BYD and Proterra; by 2030, the number of BEV buses in the LADOT fleet is expected to grow to 492 buses. Outside of California, major metropolitan areas including Chicago, Seattle, New York City, and Washington, DC, have zero-emissions transit programs with 100 percent ZEV target dates ranging from 2040 to 2045.[149 150 151 152] EV school bus programs, frequently in partnership with local utilities, are also being piloted across the country and are expanding under EPA's Clean School Bus Program (CSB).[153] These programs initially included school districts in, but not limited to, California, Virginia, Massachusetts, Michigan, Maryland, Illinois, New York, and Pennsylvania.[154 155 156 157 158] Going forward, they will continue to expand with BIL funding of over $5 billion over the next five years (FY 2022–2026) to replace existing school buses with zero-emission and low-emission models, as discussed more in Section I.C.2.

In summary, the HD ZEV market is growing rapidly, and ZEV technologies are expected to expand to many applications across the HD sector. As the industry is dynamic and changing rapidly, the examples presented here represent only a sampling of the ZEV HD investment policies and markets. DRIA Chapter 1 provides a more detailed characterization of the HD ZEV technologies in the current and projected ZEV market. We request comment on our assessment of the HD ZEV market and any additional data sources we should consider.

2. Bipartisan Infrastructure Law and Inflation Reduction Act

i. BIL

The BIL [159] was enacted on November 15, 2021, and contains provisions to support the deployment of low- and zero-emission transit buses, school buses, and trucks that service ports, as well as electric vehicle charging infrastructure and hydrogen. These provisions include Section 71101 funding for EPA's Clean School Bus Program,[160] with $5 billion to fund the replacement of ICE school buses with clean and zero-emission buses over the next five years. In its first phase of funding for the Clean School Bus Program, EPA is issuing nearly $1 billion in rebates (up to a maximum of $375,000 per bus, depending on the bus fuel type, bus size, and school district prioritization status) [161] for replacement clean and zero-emission buses and associated infrastructure costs.[162 163] The BIL also includes funding for DOT's Federal Transit Administration (FTA) Low- or No-Emission Grant Program,[164] with over $5.6 billion over the next five years to support the purchase of zero- or low-emission transit buses and associated infrastructure.[165]

The BIL includes up to $7.5 billion to help build out a national network of EV

[144] Fisher, J. (2019) ''Volvo's First Electric VNR Ready for the Road.'' Fleet Owner, September 17. *www.fleetowner.com/blue-fleets/volvo-s-first-electric-vnr-ready-road*.

[145] Gnaticov, C. (2018). ''Nikola One Hydrogen Electric Semi Hits the Road in Official Film.'' *Carscoops*, Jan. 26. *www.carscoops.com/2018/01/nikola-one-hydrogen-electric-semi-hits-road-official-film/*.

[146] Other barriers that fleet managers prioritized for fleet electrification included: Inadequate charging infrastructure—our facilities, inadequate product availability, inadequate charging infrastructure—public; for the full list of top barriers see Nadel and Junga (2020), citing UPS and GreenBiz 2018.

[147] Nadel, S. and Junga, E. (2020) ''Electrifying Trucks: From Delivery Vans to Buses to 18-Wheelers''. American Council for an Energy-Efficient Economy White Paper, available online at: *https://aceee.org/white-paper/electrifying-trucks-delivery-vans-buses-18*.

[148] LADOT, (2020). ''LADOT Transit Zero-Emission Bus Rollout Plan'' *https://ww2.arb.ca.gov/sites/default/files/2020-12/LADOT_ROP_Reso_ADA12172020.pdf*.

[149] Sustainable Bus. ''CTA Chicago tests electric buses and pursues 100% e-fleet by 2040''. April 29, 2021. Available online: *https://www.sustainable-bus.com/electric-bus/cta-chicago-electric-buses/*.

[150] Pascale, Jordan. ''Metro Approves Plans For Fully Electric Bus Fleet By 2045''. DCist. June 10, 2021. Available online: *https://dcist.com/story/21/06/10/metro-goal-entirely-electric-bus-fleet-2045/*.

[151] King County Metro. ''Transitioning to a zero-emissions fleet''. Available online: *https://kingcounty.gov/depts/transportation/metro/programs-projects/innovation-technology/zero-emission-fleet.aspx*.

[152] Hallum, Mark. ''MTA's recent purchase of zero emissions buses will be 33% bigger than expected''. AMNY. May 25, 2021. Available online: *https://www.amny.com/transit/mta-says-45-to-60-more-buses-in-recent-procurement-will-be-zero-emissions/*.

[153] U.S. Environmental Protection Agency. ''Clean School Bus Program''. Available online: *https://www.epa.gov/cleanschoolbus*.

[154] Commonwealth of Massachusetts. ''EV Programs & Incentives''. Available online: *https://www.mass.gov/info-details/ev-programs-incentives*.

[155] Morris, Charles. ''NYC's new school bus contract includes electric bus pilot''. *Charged—Electric Vehicles Magazine*. July 7, 2021. Available online: *https://chargedevs.com/newswire/nycs-new-school-bus-contract-includes-electric-bus-pilot/*.

[156] Soneji, Hitesh, et. al. ''Pittsburg USD Electric School Bus Final Project Report''. Olivine, Inc. September 23, 2020. Available online: *https://olivineinc.com/wp-content/uploads/2020/10/Pittsburg-USD-Electric-School-Bus-Final-Project-Report-Final.pdf*.

[157] Shahan, Cynthia. ''Largest Electric School Bus Program in United States Launching in Virginia''. *CleanTechnica*. January 12, 2020. Available online: *https://cleantechnica.com/2020/01/12/largest-electric-school-bus-program-in-united-states-launching-in-virginia/*.

[158] St. John, Jeff. ''Highland Electric Raises $235M, Lands Biggest Electric School Bus Contract in the US''. *gtm*. February 25, 2021. Available online: *https://www.greentechmedia.com/articles/read/on-heels-of-253m-raise-highland-electric-lands-biggest-electric-school-bus-contract-in-the-u.s.*

[159] United States, Congress. Public Law 117–58. Infrastructure Investment and Jobs Act of 2021. *Congress.gov*, *www.congress.gov/bill/117th-congress/house-bill/3684/text*. 117th Congress, House Resolution 3684, passed 15 Nov. 2021.

[160] U.S. Environmental Protection Agency. ''Clean School Bus Program''. Available online: *https://www.epa.gov/cleanschoolbus*.

[161] U.S. Environmental Protection Agency. ''2022 Clean School Bus (CSB) Rebates Program Guide''. May 2022. Available online: *https://nepis.epa.gov/Exe/ZyPDF.cgi/P1014WNH.PDF?Dockey=P1014WNH.PDF*.

[162] Some recipients are able to claim up to $20,000 per bus for charging infrastructure.

[163] U.S. Environmental Protection Agency, ''EPA Clean School Bus Program Second Report to Congress Fiscal Year 2022,'' EPA–420–R–23–002, February 2023. Available online: *https://www.epa.gov/system/files/documents/2023-02/420r23002.pdf* (last accessed February 9, 2023).

[164] U.S. Department of Transportation, Federal Transit Administration. ''Low or No Emission Vehicle Program—5339(c)''. Available online: *https://www.transit.dot.gov/lowno* (last accessed February 10, 2023).

[165] U.S. Department of Transportation, Federal Transit Administration. ''Bipartisan Infrastructure Law Fact Sheet: Grants for Buses and Bus Facilities''. Available online: *https://www.transit.dot.gov/funding/grants/fact-sheet-buses-and-bus-facilities-program* (last accessed February 10, 2023).

charging and hydrogen fueling through DOT's Federal Highway Administration (FHWA). This includes $2.5 billion in discretionary grant programs for charging and fueling infrastructure [166] along designated alternative fuel corridors and in communities (Section 11401) [167] and $5 billion for the National Electric Vehicle Infrastructure (NEVI) Formula Program (under Division J, Title VIII).[168] In September 2022, the FHWA approved the first set of plans for the NEVI program covering all 50 states, Washington, DC, and Puerto Rico. The approved plans provide $1.5 billion in funding for fiscal years (FY) 2022 and 2023 to expand charging on over 75,000 miles of highway.[169] While jurisdictions are not required to build stations specifically for heavy-duty vehicles, FHWA's guidance encourages states to consider station designs and power levels that could support heavy-duty vehicles.[170]

The BIL funds other programs that could support HD vehicle electrification. For example, there is continued funding of the Congestion Mitigation and Air Quality (CMAQ) Improvement Program, with more than $2.5 billion authorized for FY 2022 through FY 2026. The BIL (Section 11115) amended the CMAQ Improvement Program to add, among other things, ''the purchase of medium- or heavy-duty zero emission vehicles and related charging equipment'' to the list of activities eligible for funding. The BIL establishes a program under Section 11402 ''Reduction of Truck Emissions at Port Facilities'' that includes grants to be administered through FHWA aimed at reducing port emissions, including through electrification. In addition, the BIL includes funding for DOT's Maritime Administration (MARAD) Port Infrastructure Development Program; [171] and DOT's Federal Highway Administration (FHWA) Carbon Reduction Program.[172]

The BIL also targets batteries used for electric vehicles. It funds DOE's Battery Materials Processing and Battery Manufacturing program,[173] which grants funds to promote U.S. processing and manufacturing of batteries for automotive and electric grid use through demonstration projects, the construction of new facilities, and the retooling, retrofitting, and expansion of existing facilities. This includes a total of $3 billion for battery material processing and $3 billion for battery manufacturing and recycling, with additional funding for a lithium-ion battery recycling prize competition, research and development activities in battery recycling, state and local programs, and the development of a collection system for used batteries. In addition, the BIL includes $200 million for the Electric Drive Vehicle Battery Recycling and Second-Life Application Program for research, development, and demonstration of battery recycling and second-life applications.

Hydrogen provisions of the BIL include funding for several programs to accelerate progress towards the Hydrogen Shot goal, launched on June 7, 2021, to reduce the cost of clean hydrogen [174] production by 80 percent to $1 for 1 kg in 1 decade [175] and jumpstart the hydrogen market in the United States. This includes $8 billion for the Department of Energy's Regional Clean Hydrogen Hubs Program to establish networks of clean hydrogen producers, potential consumers, and connective infrastructure in close proximity; $1 billion for a Clean Hydrogen Electrolysis Program; and $500 million for Clean Hydrogen Manufacturing and Recycling Initiatives.[176] The BIL also called for development of a Clean Hydrogen Production Standard to guide DOE hub and Research, Development, Deployment, and Diffusion (RDD&D) actions; and a National Clean Hydrogen Strategy and Roadmap to facilitate widescale production, processing, delivery, storage, and use of clean hydrogen. These BIL programs are currently under development, and further details are expected over the course of calendar year (CY) 2023.

ii. IRA Sections 13502 and 13403

The IRA,[177] which was enacted on August 16, 2022, contains several provisions relevant to vehicle electrification and the associated infrastructure via tax credits, grants, rebates, and loans through CY 2032, including two key provisions that provide a tax credit to reduce the cost of producing qualified batteries (battery tax credit) and to reduce the cost of purchasing qualified ZEVs (vehicle tax credit). The battery tax credit in ''Advanced Manufacturing Production Credit'' in IRA section 13502 and the ''Qualified Commercial Clean Vehicles'' vehicle tax credit in IRA section 13403 are included quantitatively in our analysis.

IRA section 13502, ''Advanced Manufacturing Production Credit,'' provides tax credits for the production and sale of battery cells and modules of up to $45 per kilowatt-hour (kWh), and for 10 percent of the cost of producing applicable critical minerals (including those found in batteries and fuel cells, provided that the minerals meet certain specifications), when such components or minerals are produced in the United States. These credits begin in CY 2023 and phase down starting in CY 2030, ending after CY 2032. With projected direct manufacturing costs for heavy-

[166] Fueling infrastructure includes hydrogen, propane, and natural gas.

[167] U.S. Department of Transportation, Federal Highway Administration, ''The National Electric Vehicle Infrastructure (NEVI) Formula Program Guidance,'' February 10, 2022. Available online: *https://www.fhwa.dot.gov/environment/alternative_fuel_corridors/nominations/90d_nevi_formula_program_guidance.pdf* (last accessed February 10, 2023).

[168] U.S. Department of Transportation, Federal Highway Administration. ''Bipartisan Infrastructure Law, Fact Sheets: National Electric Vehicle Infrastructure Formula Program''. February 10, 2022. Available online: *https://www.fhwa.dot.gov/bipartisan-infrastructure-law/nevi_formula_program.cfm.*

[169] U.S. Department of Transportation. ''Historic Step: All Fifty States Plus DC and Puerto Rico Grenlit to Move EV Charging Networks Forward, Covering 75,000 miles of Highway''. Available online: *https://www.transportation.gov/briefing-room/historic-step-all-fifty-states-plus-dc-and-puerto-rico-greenlit-move-ev-charging.*

[170] U.S. Department of Transportation, Federal Highway Administration. ''National Electric Vehicle Infrastructure Formula Program: Bipartisan Infrastructure Law—Program Guidance''. February 10, 2022. Available online: *https://www.fhwa.dot.gov/environment/alternative_fuel_corridors/nominations/90d_nevi_formula_program_guidance.pdf.*

[171] U.S. Department of Transportation, Maritime Administration. ''Bipartisan Infrastructure Law: Maritime Administration''. Available online: *https://www.maritime.dot.gov/about-us/bipartisan-infrastructure-law-maritime-administration.*

[172] U.S. Department of Transportation, Federal Highway Administration. ''Bipartisan Infrastructure Law, Fact Sheets: Carbon Reduction Program (CRP)''. April 20, 2022. Available online: *https://www.fhwa.dot.gov/bipartisan-infrastructure-law/crp_fact_sheet.cfm.*

[173] U.S. Department of Energy. ''Biden Administration Announces $3.16 Billion From Bipartisan Infrastructure Law to Boost Domestic Battery Manufacturing and Supply Chains. May 2, 2022. Available online: *https://www.energy.gov/articles/biden-administration-announces-316-billion-bipartisan-infrastructure-law-boost-domestic.*

[174] The BIL defines ''clean hydrogen'' as hydrogen produced in compliance with the GHG emissions standard established under 42 U.S. Code section 16166(a), including production from any fuel source, where the standard developed shall define the term to mean hydrogen produced with a carbon intensity equal to or less than 2 kilograms of carbon dioxide-equivalent produced at the site of production per kilogram of hydrogen produced.

[175] Satyapal, Sunita. ''2022 AMR Plenary Session''. U.S. Department of Energy, Hydrogen and Fuel Cell Technologies Office. June 6, 2022. Available online: *https://www.energy.gov/sites/default/files/2022-06/hfto-amr-plenary-satyapal-2022-1.pdf.*

[176] U.S. Department of Energy. ''DOE Establishes Bipartisan Infrastructure Law's $9.5 Billion Clean Hydrogen Initiatives''. February 15, 2022. Available online: *https://www.energy.gov/articles/doe-establishes-bipartisan-infrastructure-laws-95-billion-clean-hydrogen-initiatives.*

[177] Inflation Reduction Act of 2022, Public Law 117–169, 136 Stat. 1818 (2022) (''Inflation Reduction Act'' or ''IRA''), available at *https://www.congress.gov/117/bills/hr5376/BILLS-117hr5376enr.pdf.*

duty vehicle batteries on the order of $65 to $275/kWh in the 2025–2030 timeframe,[178] this tax credit has the potential to noticeably reduce the cost of qualifying batteries and, by extension, the cost of BEVs and FCEVs with qualifying batteries. We did not include a detailed cost breakdown of fuel cells quantitatively in our analysis, but the potential impact on fuel cells may also be significant because platinum (an applicable critical mineral commonly used in fuel cells) is a major contributor to the cost of fuel cells.[179]

We limited our assessment of this tax credit in our DRIA Chapter 2 analysis to the tax credits for battery cells and modules. Pursuant to the IRA, qualifying battery cells must have an energy density of not less than 100 watt-hours per liter, and we expect that batteries for heavy-duty BEVs and FCEVs will exceed this requirement as described in DRIA Chapter 2.4.2.2. Qualifying battery cells must be capable of storing at least 12 watt-hours of energy and qualifying battery modules must have an aggregate capacity of not less than 7 kWh (or, for FCEVs, not less than 1 kWh); typical battery cells and modules for motor vehicles also exceed these requirements.[180] Additionally, the ratio of the capacity of qualifying cells and modules to their maximum discharge amount shall not exceed 100:1. We expect that battery cells and modules in heavy-duty BEVs and FCEVs will also meet this requirement because the high costs and weight of the batteries and the competitiveness of the heavy-duty industry will pressure manufacturers to allow as much of their batteries to be useable as possible. We did not consider the tax credits for critical minerals quantitatively in our analysis. However, we note that any applicability of the critical mineral tax credit may further reduce the costs of batteries.

We included this battery tax credit by reducing the direct manufacturing costs of batteries in BEVs and FCEVs, but not the associated indirect costs. At present, there are few manufacturing plants for HD vehicle batteries in the United States, which means that few batteries would qualify for the tax credit now. We expect that the industry will respond to this tax credit incentive by building more domestic battery manufacturing capacity in the coming years, but this will take several years to come to fruition. Thus, we have chosen to model this tax credit by assuming that HD BEV and FCEV manufacturers fully utilize the module tax credit (which provides $10 per kWh) and gradually increase their utilization of the cell tax credit (which provides $35 per kWh) for MY 2027–2029 until MY 2030 and beyond, when they earn 100 percent of the available cell and module tax credits. Further discussion of this battery tax credit and our battery costs can be found in DRIA Chapter 2.4.3.1.

IRA section 13403, ''Qualified Commercial Clean Vehicles,'' creates a tax credit of up to $40,000 per Class 4 through 8 HD vehicle (up to $7,500 per Class 2b or 3 vehicle) for the purchase or lease of a qualified commercial clean vehicle. This tax credit is available from CY 2023 through CY 2032 and is based on the lesser of the incremental cost of the clean vehicle over a comparable ICE vehicle or the specified percentage of the basis of the clean vehicle, up to the maximum applicable limitation. By effectively reducing the price a vehicle owner must pay for a HD ZEV and the incremental difference in cost between it and a comparable ICE vehicle—by $40,000 in many cases—more vehicle purchasers will be poised to take advantage of the cost savings anticipated from total cost of ownership, including operational cost savings from fuel and maintenance and repair compared with ICE vehicles. Among other specifications, these vehicles must be on-road vehicles (or mobile machinery) that are propelled to a significant extent by a battery-powered electric motor or are qualified fuel cell motor vehicles (also known as fuel cell electric vehicles, FCEVs). For the former, the battery must have a capacity of at least 15 kWh (or 7 kWh if it has a gross vehicle weight rating of less than 14,000 pounds (Class 3 or below)) and must be rechargeable from an external source of electricity. This limits the qualified vehicles to BEVs and plug-in hybrid electric vehicles (PHEVs), in addition to FCEVs. Since this tax credit overlaps with the model years for which we are proposing standards (MYs 2027 through 2032), we included it in our calculations for each of those years in our feasibility analysis for our proposed standards (see DRIA Chapter 2).

For BEVs and FCEVs, the per-vehicle tax credit is equal to the lesser of the following, up to the cap limitation: (A) 30 percent of the BEV or FCEV cost, or (B) the incremental cost of the BEV or FCEV when compared to a comparable (in size and use) ICE vehicle. The limitation on this tax credit is $40,000 for vehicles with a gross vehicle weight rating of equal to or greater than 14,000 pounds (Class 4–8 commercial vehicles) and $7,500 for vehicles with a gross vehicle weight rating of less than 14,000 pounds (commercial vehicles Class 3 and below). For example, if a BEV with a gross vehicle weight rating of equal to or greater than 14,000 pounds costs $350,000 and a comparable ICE vehicle costs $150,000,[181] the tax credit would be the lesser of the following, subject to the limitation: (A) 30 percent × $350,000 = $105,000 or (B) $350,000 − $150,000 = $200,000. (A) is less than (B), but (A) exceeds the limit of $40,000, so the tax credit would be $40,000. For PHEVs, the per-vehicle tax credit follows the same calculation and cap limitation as for BEVs and FCEVs except that (A) is 15 percent of the PHEV cost.

In order to estimate the impact of this tax credit in our feasibility analysis for BEVs and FCEVs, we first applied a retail price equivalent to our direct manufacturing costs for BEVs, FCEVs, and ICE vehicles. Note that the direct manufacturing costs of BEVs and FCEVs were reduced by the amount of the battery tax credit in IRA section 13502, as described in DRIA Chapter 2.4.3.1. We calculated the purchaser's incremental cost of BEVs and FCEVs compared to ICE vehicles and not the full cost of vehicles in our analysis. We based our calculation of the tax credit on this incremental cost. When the incremental cost exceeded the tax credit limitation (determined by gross vehicle weight rating as described in the previous paragraph), we decreased the incremental cost by the tax credit limitation. When the incremental cost was between $0 and the tax credit limitation, we reduced the incremental cost to $0 (*i.e.,* the tax credit received by the purchaser was equal to the incremental cost). When the incremental cost was negative (*i.e.,* the BEV or FCEV was cheaper to purchase than the ICE vehicle), no tax credit was given. In order for this calculation to be appropriate, we determined that all

[178] Sharpe, B., Basma, H. ''A meta-study of purchase costs for zero-emission trucks''. International Council on Clean Transportation. February 17, 2022. Available online: *https://theicct.org/wp-content/uploads/2022/02/purchase-cost-ze-trucks-feb22-1.pdf.*

[179] Leader, Alexandra & Gaustad, Gabrielle & Babbitt, Callie. (2019). The effect of critical material prices on the competitiveness of clean energy technologies. Materials for Renewable and Sustainable Energy. 8. 10.1007/s40243–019–0146–z.

[180] Islam, Ehsan Sabri, Ram Vijayagopal, Aymeric Rousseau. ''A Comprehensive Simulation Study to Evaluate Future Vehicle Energy and Cost Reduction Potential'', Report to the U.S. Department of Energy, Contract ANL/ESD–22/6, October 2022. See Medium- and heavy-duty vehicles (techno-economic analysis with BEAN). Available online: *https://vms.taps.anl.gov/research-highlights/u-s-doe-vto-hfto-r-d-benefits/.*

[181] Sharpe, B., Basma, H. ''A meta-study of purchase costs for zero-emission trucks''. International Council on Clean Transportation. February 17, 2022. Available online: *https://theicct.org/wp-content/uploads/2022/02/purchase-cost-ze-trucks-feb22-1.pdf.*

Class 4–8 BEVs and FCEVs must cost more than $133,333 such that 30 percent of the cost is at least $40,000 (or $25,000 and $7,500, respectively, for BEVs and FCEVs Class 3 and below), which is reasonable based on our review of the literature on the costs of BEVs and FCEVs.[182] The tax credit amounts for each vehicle type included in our analysis in MYs 2027 and 2032 are shown in DRIA Chapter 2.8.2.

We project that the impact of the IRA vehicle tax credit will be significant, as shown in DRIA Chapter 2.8.2. In many cases, the incremental cost (with the tax credit) of a BEV compared to an ICE vehicle is eliminated, leaving only the cost of the electric vehicle supply equipment (EVSE) as an added upfront cost to the BEV owner. Similarly, in some cases, the tax credit eliminates the upfront cost of a FCEV compared to an ICE vehicle.

iii. Other IRA Provisions

There are many other provisions of the IRA that we expect will support electrification of the heavy-duty fleet. Importantly, these other provisions do not serve to reduce ZEV adoption rates from our current projections. Due to the complexity of analyzing the combined potential impact of these provisions, we did not quantify their potential impact in our assessment of costs and feasibility, but we note that they may help to reduce many obstacles to electrification of HDVs and may further support or even increase ZEV adoption rates beyond the levels we currently project. Our assessment of the impacts of these provisions of the IRA on ZEV adoption rates are, therefore, somewhat conservative.

Section 13404, ''Alternative Fuel Refueling Property Credit,'' modifies an existing tax credit that applies to alternative fuel refueling property (*e.g.,* electric vehicle chargers and hydrogen fueling stations) and extends the tax credit through CY 2032. The credit also applies to refueling property that stores or dispenses specified clean-burning fuels, including at least 85 percent hydrogen, into the fuel tank of a motor vehicle. Starting in CY 2023, this provision provides a tax credit of up to 30 percent of the cost of the qualified alternative fuel refueling property (*e.g.,* HD BEV charger), and up to $100,000 when located in low-income or non-urban area census tracts and certain other requirements are met. We expect that many HD BEV owners will need chargers installed in their depots for overnight charging, and this tax credit will effectively reduce the costs of installing charging infrastructure and, in turn, further effectively reduce the total costs associated with owning a BEV for many HD vehicle owners. Additionally, this tax credit may offset some of the costs of installing very high-powered public and private chargers that are necessary to recharge HD BEVs with minimal downtime during the day. Similarly, we expect that this tax credit will reduce the costs associated with refueling heavy-duty FCEVs, whose owners may rely on public hydrogen refueling stations or those installed in their depots. We expect that this tax credit will help incentivize the build out of the charging and hydrogen refueling infrastructure necessary for high BEV and FCEV adoption, which may further support increased BEV and FCEV uptake.

Section 60101, ''Clean Heavy-duty Vehicles,'' amends the CAA to add new section 132 (42 U.S.C. 7432) and appropriates $1 billion to the Administrator, including $600 million generally for carrying out CAA section 132 (3 percent of which must be reserved for administrative costs necessary to carry out the section's provisions) and $400 million to make awards under CAA section 132 to eligible recipients/contractors that propose to replace eligible vehicles to serve one or more communities located in an air quality area designated pursuant to CAA section 107 as nonattainment for any air pollutant, in FY 2022 and available through FY 2031. CAA section 132 requires the Administrator to implement a program to make awards of grants and rebates to eligible recipients (defined as States, municipalities, Indian tribes, and nonprofit school transportation associations), and to make awards of contracts to eligible contractors for providing rebates, for up to 100 percent of costs for: (1) the incremental costs of replacing a Class 6 or Class 7 heavy-duty vehicle that is not a zero-emission vehicle with a zero-emission vehicle (as determined by the Administrator based on the market value of the vehicles); (2) purchasing, installing, operating, and maintaining infrastructure needed to charge, fuel, or maintain zero-emission vehicles; (3) workforce development and training to support the maintenance, charging, fueling, and operation of zero-emission vehicles; and (4) planning and technical activities to support the adoption and deployment of zero-emission vehicles.

Section 60102, ''Grants to Reduce Air Pollution at Ports,'' amends the CAA to add a new section 133 (42 U.S.C. 7433) and appropriates $3 billion (2 percent of which must be reserved for administrative costs necessary to carry out the section's provisions), $750 million of which is for projects located in areas of nonattainment for any air pollutant, in FY 2022 and available through FY 2027, to reduce air pollution at ports. Competitive rebates or grants are to be awarded for the purchase or installation of zero-emission port equipment or technology for use at, or to directly serve, one or more ports; to conduct any relevant planning or permitting in connection with the purchase or permitting of zero-emission port equipment or technology; and to develop qualified climate action plans. The zero-emission equipment or technology either (1) produces zero emissions of GHGs, listed criteria pollutants, and hazardous air pollutants or (2) it captures 100 percent of the emissions produced by an ocean-going vessel at berth.

Section 60103, ''Greenhouse Gas Reduction Fund,'' amends the CAA to add a new section 134 (42 U.S.C. 7434) and appropriates $27 billion, $15 billion of which is for low-income and disadvantaged communities, in FY 2022 and available through FY 2024, for a GHG reduction grant program. The program supports direct investments in qualified projects at the national, regional, State, and local levels, and indirect investments to establish new or support existing public, quasi-public, not-for-profit, or nonprofit entities that provide financial assistance to qualified projects. The program focuses on the rapid deployment of low- and zero-emission products, technologies, and services to reduce or avoid GHG emissions and other forms of air pollution.

Section 60104, ''Diesel Emissions Reductions,'' appropriates $60 million (2 percent of which must be reserved for administrative costs necessary to carry out the section's provisions), in FY 2022 and available through FY 2031, for grants, rebates, and loans under section 792 of the Energy Policy Act of 2005 (42 U.S.C. 16132) to identify and reduce diesel emissions resulting from goods movement facilities and vehicles servicing goods movement facilities in low-income and disadvantaged communities to address the health impacts of such emissions on such communities.

[182] Burnham, A., Gohlke, D., Rush, L., Stephens, T., Zhou, Y., Delucchi, M. A., Birky, A., Hunter, C., Lin, Z., Ou, S., Xie, F., Proctor, C., Wiryadinata, S., Liu, N., Boloor, M. ''Comprehensive Total Cost of Ownership Quantification for Vehicles with Different Size Classes and Powertrains''. Argonne National Laboratory. April 1, 2021. Available at *https://publications.anl.gov/anlpubs/2021/05/167399.pdf.*

Section 70002 appropriates $3 billion in FY 2022 and available through FY 2031 for the U.S. Postal Service to purchase ZEVs ($1.29 billion) and to purchase, design, and install infrastructure to support zero-emission delivery vehicles at facilities that the U.S. Postal Service owns or leases from non-Federal entities ($1.71 billion).

Section 13501, ''Extension of the Advanced Energy Project Credit,'' allocates $10 billion in tax credits for facilities to domestically manufacture advanced energy technologies, subject to certain application and other requirements and limitations. Qualifying properties now include light-, medium-, or heavy-duty electric or fuel cell vehicles along with the technologies, components, or materials for such vehicles and the associated charging or refueling infrastructure. They also include hybrid vehicles with a gross vehicle weight rating of not less than 14,000 pounds along with the technologies, components, or materials for them.

Sections 50142, 50143, 50144, 50145, 50151, 50152, and 50153 collectively appropriate nearly $13 billion to support low- and zero-emission vehicle manufacturing and energy infrastructure. These provisions are intended to help accelerate the ability for industry to meet the demands spurred by the previously mentioned IRA sections, both for manufacturing vehicles, including BEVs and FCEVs, and for energy infrastructure.

Section 13204, ''Clean Hydrogen,'' amends section 45V of the Internal Revenue Code (*i.e.,* Title 26) to offer a tax credit to produce hydrogen for qualified clean production facilities that use a process that results in a lifecycle GHG emissions rate of not greater than 4 kg of CO_2e per kg of hydrogen. This credit is eligible for qualified clean hydrogen production facilities whose construction begins before January 1, 2033, and is available during the 10-year period beginning on the date such facility was originally placed in service. The credit increases to a maximum of $3 per kilogram produced as the lifecycle GHG emissions rate is reduced to less than 0.45 kg of CO_2e per kg of hydrogen. Facilities that received credit for the construction of carbon capture and direct air capture equipment or facilities (*i.e.,* under 45Q) do not qualify, and prevailing wage and apprenticeship requirements apply. Section 60113, ''Methane Emissions Reduction Program,'' amends the CAA by adding Section 136 and appropriates $850 million to EPA to support methane mitigation and monitoring, plus authorizes a new fee of $900 per ton on ''waste'' methane emissions that escalates after two years to $1,500 per ton. These combined incentives promote the production of hydrogen in a manner that minimizes its potential greenhouse gas impact.

While there are challenges facing greater adoption of heavy-duty ZEV technologies, the IRA provides many financial incentives to overcome these challenges and thus would also support our proposed rulemaking. We expect IRA sections 13502 and 13403 to support the adoption of HD ZEV technologies in the market, as detailed in our assessment of the appropriate GHG standards we are proposing. Additionally, we expect IRA sections 13404, 60101–60104, 70002, 13501, 50142–50145, 50151–50153, and 13204 to further accelerate ZEV adoption, but we are not including them quantitatively in our analyses.

As described in Section II of the proposed rule, EPA has considered the potential impacts of the BIL and the IRA in our assessment of the appropriate proposed GHG standards both quantitatively and qualitatively, and we request comment on our approach.

3. States' Efforts To Increase Adoption of HD ZEVs

HD vehicle sales and on-road vehicle populations are significant in the state of California. Approximately ten percent of U.S. HD ICE vehicles in 2016 were registered in California.[183] California adopted the ACT program in 2020, which will also influence the market trajectory for BEV and FCEV technologies.[184] [185] [186] The ACT program requires manufacturers who certify HD vehicles for sale in California to sell a certain percentage of zero-emission HD vehicles (BEVs or FCEVs) in California for each model year, beginning with MY 2024.[187] As shown in Table I–1, the sales requirements vary by vehicle class, starting at 5 to 9 percent of total MY 2024 HD vehicle sales in California and increasing to 40 to 75 percent of a total MY's HD vehicle sales in California in MYs 2035 and later.[188]

TABLE I–1—CARB'S ACT ZEV SALES REQUIREMENTS FOR CLASS 4–8 HEAVY-DUTY VEHICLES BY MODEL YEAR [1]

Model year (MY)	Class 4–8 (%)	Class 7–8 tractors (%)
2024	9	5
2025	11	7
2026	13	10
2027 [2]	20	15
2028 [2]	30	20
2029 [2]	40	25
2030 [2]	50	30
2031 [2]	55	35
2032 [2]	60	40
2033	65	40
2034	70	40
2035+	75	40

Notes:

[1] The CARB ACT program also includes ZEV sales requirements for Class 2b and 3 vehicles with GVWR between 8,500 and 14,000 pounds. These vehicles are primarily commercial pickup trucks and vans and are sometimes referred to as ''medium-duty vehicles.'' The majority of Class 2b and 3 vehicles are chassis-certified vehicles and EPA is addressing these vehicles in a separate regulatory action, along with light-duty vehicles, consistent with E.O. 14037, Section 2a.

[2] We are proposing GHG emission standards for these MYs in this action.

Outside of California, a number of states have signaled interest in greater adoption of HD ZEV technologies and/or establishing specific goals to increase the HD electric vehicle market. As one example, the Memorandum of Understanding (MOU), ''Multi-State Medium- and Heavy-Duty Zero Emission Vehicle,'' (Multi-State MOU) organized by Northeast States for Coordinated Air Use Management (NESCAUM), sets targets ''to make all sales of new medium- and heavy-duty vehicles [in the jurisdictions of the signatory states and the District of Columbia] zero emission vehicles by no later than 2050'' with an interim goal of 30 percent of all sales of new medium- and heavy-duty vehicles being zero emission vehicles no later than 2030.[189]

[183] FHWA. U.S. Highway Statistics. Available online at: *https://www.fhwa.dot.gov/policyinformation/statistics.cfm.*

[184] CAA section 209(a) generally preempts states from adopting emission control standards for new motor vehicles. But Congress created an important exception from preemption. Under CAA section 209(b), the State of California may seek a waiver of preemption, and EPA must grant it unless the Agency makes one of three statutory findings. California's waiver of preemption for its motor vehicle emissions standards allows other States to adopt and enforce identical standards pursuant to CAA section 177. Since the CAA was enacted, EPA has granted California dozens of waivers of preemption, permitting California to enforce its own motor vehicle emission standards.

[185] California Air Resources Board, Final Regulation Order—Advanced Clean Trucks Regulation. Filed March 15, 2021. Available at: *https://ww2.arb.ca.gov/sites/default/files/barcu/regact/2019/act2019/fro2.pdf.*

[186] EPA granted the ACT rule waiver requested by California under CAA section 209(b) on March 30, 2023.

[187] California Air Resources Board, Final Regulation Order—Advanced Clean Trucks Regulation. Filed March 15, 2021. Available at: *https://ww2.arb.ca.gov/sites/default/files/barcu/regact/2019/act2019/fro2.pdf* at § 1963.1, tbl. A–1, ''ZEV Sales Percentage Schedule''.

[188] *Ibid.*

[189] Northeast States for Coordinated Air Use Management (NESCAUM), Multi-state Medium-

Continued

The Multi-State MOU was signed by the governors of 17 states including California, Colorado, Connecticut, Hawaii, Maine, Maryland, Massachusetts, New Jersey, New York, North Carolina, Nevada, Oregon, Pennsylvania, Rhode Island, Vermont, Virginia, and Washington, as well as the mayor of the District of Columbia. The Multi-State MOU outlines these jurisdictions' more specific commitments to move toward ZEVs through the Multi-State ZEV Task Force and provides an action plan for zero-emission medium- and heavy-duty vehicles with measurable sales targets and a focus on overburdened and underserved communities. Several states that signed the Multi-State MOU have since adopted California's ACT program, pursuant to CAA section 177, and we anticipate more jurisdictions will follow with similar proposals.[190]

D. EPA Statutory Authority for the Proposal

This section briefly summarizes the statutory authority for the proposed rule. Statutory authority for the GHG standards EPA is proposing is found in CAA section 202(a)(1) (2), 42 U.S.C. 7521(a)(1)–(2), which requires EPA to establish standards applicable to emissions of air pollutants from new motor vehicles and engines which cause or contribute to air pollution which may reasonably be anticipated to endanger public health or welfare. Additional statutory authority for the proposed action is found in CAA sections 202–209, 216, and 301, 42 U.S.C. 7521–7543, 7550, and 7601. We discuss some key aspects of these sections in relation to this proposed action immediately below.

Title II of the Clean Air Act provides for comprehensive regulation of mobile sources, authorizing EPA to regulate emissions of air pollutants from all mobile source categories, including motor vehicles under CAA section 202(a). In turn, CAA section 216(2) defines ''motor vehicle'' as ''any self-propelled vehicle designed for transporting persons or property on a street or highway.'' Congress has intentionally and consistently used the broad term ''any self-propelled vehicle'' since the Motor Vehicle Air Pollution Control Act of 1965 so as not to limit standards adopted under CAA section 202 to vehicles running on a particular fuel, power source, or system of propulsion. Congress's focus was on emissions from classes of motor vehicles and the ''requisite technologies'' that could feasibly reduce those emissions giving appropriate consideration to cost of compliance and lead time, as opposed to being limited to any particular type of vehicle.

Section 202(a)(1) of the CAA states that ''the Administrator shall by regulation prescribe (and from time to time revise) . . . standards applicable to the emission of any air pollutant from any class or classes of new motor vehicles . . . which in his judgment cause, or contribute to, air pollution which may reasonably be anticipated to endanger public health or welfare.'' CAA section 202(a)(1) also requires that any standards promulgated thereunder ''shall be applicable to such vehicles and engines for their useful life (as determined under [CAA section 202(d)], relating to useful life of vehicles for purposes of certification), whether such vehicle and engines are designed as complete systems or incorporate devices to prevent or control such pollution.'' CAA section 202(d) directs EPA to prescribe regulations under which the ''useful life'' of vehicles and engines shall be determined for the purpose of setting standards under CAA section 202(a)(1). For HD highway vehicles and engines, CAA section 202(d) establishes ''useful life'' minimum values of 10 years or 100,000 miles, whichever occurs first, unless EPA determines that greater values are appropriate.[191]

While emission standards set by the EPA under CAA section 202(a)(1) generally do not mandate use of particular technologies, they are technology-based, as the levels chosen must be premised on a finding of technological feasibility. Thus, standards promulgated under CAA section 202(a) are to take effect only ''after such period as the Administrator finds necessary to permit the development and application of the requisite technology, giving appropriate consideration to the cost of compliance within such period.'' CAA section 202(a)(2); see also *NRDC* v. *EPA,* 655 F. 2d 318, 322 (D.C. Cir. 1981). EPA must consider costs to those entities which are directly subject to the standards. *Motor & Equipment Mfrs. Ass'n Inc.* v. *EPA*, 627 F. 2d 1095, 1118 (D.C. Cir. 1979). Thus, ''the [s]ection 202(a)(2) reference to compliance costs encompasses only the cost to the motor-vehicle industry to come into compliance with the new emission standards, and does not mandate consideration of costs to other entities not directly subject to the proposed standards.'' *Coalition for Responsible Regulation* v. *EPA,* 684 F.3d 120, 128 (D.C. Cir. 2012). EPA is afforded considerable discretion under section 202(a) when assessing issues of technical feasibility and availability of lead time to implement new technology. Such determinations are ''subject to the restraints of reasonableness,'' which ''does not open the door to 'crystal ball' inquiry.'' NRDC, 655 F. 2d at 328, quoting International *Harvester Co.* v. *Ruckelshaus*, 478 F. 2d 615, 629 (D.C. Cir. 1973); *see also Growth Energy* v. *EPA,* 5 F.4th 1, 15 (D.C. Cir. 2021) (''The court is 'particularly deferential' to agencies' predictive judgments, requiring only that 'the agency acknowledge factual uncertainties and identify the considerations it found persuasive.' EPA cleared that modest bar.'') (internal citations omitted). Moreover, ''EPA is not obliged to provide detailed solutions to every engineering problem posed in the perfection of [a particular device]. In the absence of theoretical objections to the technology, the agency need only identify the major steps necessary for development of the device, and give plausible reasons for its belief that the industry will be able to solve those problems in the time remaining. The EPA is not required to rebut all

and Heavy-duty Zero Emission Vehicle Memorandum of Understanding, available at *https://www.nescaum.org/documents/mhdv-zev-mou-20220329.pdf/* (hereinafter ''Multi-State MOU'').

[190] *See, e.g.,* Final Advanced Clean Truck Amendments, 1461 Mass. Reg. 29 (Jan. 21, 2022) (Massachusetts). Medium- and Heavy-Duty (MHD) Zero Emission Truck Annual Sales Requirements and Large Entity Reporting, 44 N.Y. Reg. 8 (Jan. 19, 2022) (New York), available at *https://dos.ny.gov/system/files/documents/2022/01/011922.pdf.* Advanced Clean Trucks Program and Fleet Reporting Requirements, 53 N.J.R. 2148(a) (Dec. 20, 2021) (New Jersey), available at *https://www.nj.gov/dep/rules/adoptions/adopt_20211220a.pdf* (pre-publication version). Clean Trucks Rule 2021, DEQ–17–2021 (Nov. 17, 2021), available at *http://records.sos.state.or.us/ORSOSWebDrawer/Recordhtml/8581405* (Oregon). Low emission vehicles, Wash. Admin. Code. § 173–423–070 (2021), available at *https://app.leg.wa.gov/wac/default.aspx?cite=173-423-070;* 2021 Wash. Reg. 587356 (Dec. 15, 2021); Wash. Reg. 21–24–059 (Nov. 29, 2021) (amending Wash. Admin. Code. §§ 173–423 and 173–400), available at *https://lawfilesext.leg.wa.gov/law/wsrpdf/2021/24/21-24-059.pdf.* (Washington).

[191] In 1983, EPA adopted useful life periods to apply for HD engines criteria pollutant standards (48 FR 52170, November 16, 1983). The useful life mileage for heavy HD engines criteria pollutant standards was subsequently increased for 2004 and later model years (62 FR 54694, October 21, 1997). In the GHG Phase 2 rule (81 FR 73496, October 25, 2016), EPA set the same useful life periods to apply for HD engines and vehicles greenhouse gas emission standards, except that the spark-ignition HD engine standards and the standards for model year 2021 and later light HD engines apply over a useful life of 15 years or 150,000 miles, whichever comes first. In the HD2027 rule (88 FR 4359, January 24, 2023), EPA lengthened useful life periods for all 2027 and later model year HD engines criteria pollutant standards. See also 40 CFR 1036.104(e), 1036.108(d), 1037.105(e), and 1037.106(e).

speculation that unspecified factors may hinder 'real world' emission control.'' NRDC, 655 F. 2d at 333–34. In developing such technology-based standards, EPA has the discretion to consider different standards for appropriate groupings of vehicles (''class or classes of new motor vehicles''), or a single standard for a larger grouping of motor vehicles. NRDC, 655 F.2d at 338.[192]

Although standards under CAA section 202(a)(1) are technology-based, they are not based exclusively on technological capability. Pursuant to the broad grant of authority in section 202, when setting GHG emission standards for HD vehicles, EPA must consider certain factors and may also consider other factors and has done so previously when setting such standards. For instance, in HD GHG Phase 1 and Phase 2, EPA explained that when acting under this authority EPA has considered such issues as technology effectiveness, its cost (including per vehicle, per manufacturer, and per purchaser), the lead time necessary to implement the technology, and based on this the feasibility and practicability of potential standards; the impacts of potential standards on emissions reductions; the impacts of standards on oil conservation and energy security; the impacts of standards on fuel savings by vehicle operators; the impacts of standards on the heavy-duty vehicle industry; as well as other relevant factors such as impacts on safety.[193] [194]

In addition, EPA has clear authority to set standards under CAA section 202(a)(1)–(2) that are technology forcing when EPA considers that to be appropriate, but is not required to do so (as compared to standards under provisions such as section 202(a)(3), which require the greatest degree of emissions reduction achievable, giving appropriate consideration to cost, energy and safety factors). CAA section 202(a) does not specify the degree of weight to apply to each factor, and EPA accordingly has discretion in choosing an appropriate balance among factors. *See Sierra Club* v. *EPA,* 325 F.3d 374, 378 (D.C. Cir. 2003) (even where a provision is technology-forcing, the provision ''does not resolve how the Administrator should weigh all [the statutory] factors in the process of finding the 'greatest emission reduction achievable'''); *National Petrochemical and Refiners Ass'n* v. *EPA,* 287 F.3d 1130, 1135 (D.C. Cir. 2002) (EPA decisions, under CAA provision authorizing technology-forcing standards, based on complex scientific or technical analysis are accorded particularly great deference); see also *Husqvarna AB* v. *EPA,* 254 F. 3d 195, 200 (D.C. Cir. 2001) (great discretion to balance statutory factors in considering level of technology-based standard, and statutory requirement ''to [give appropriate] consideration to the cost of applying . . . technology'' does not mandate a specific method of cost analysis); *Hercules Inc.* v. *EPA,* 598 F. 2d 91, 106 (D.C. Cir. 1978) (''In reviewing a numerical standard we must ask whether the agency's numbers are within a zone of reasonableness, not whether its numbers are precisely right.'').[195]

As noted previously in this section, there are also other provisions of the CAA that provide authority for EPA's proposed action, including CAA sections 203, 206, and 207. Under section 203 of the CAA, sales of vehicles are prohibited unless the vehicle is covered by a certificate of conformity, and EPA issues certificates of conformity pursuant to section 206 of the CAA. Certificates of conformity are based on (necessarily) pre-sale testing conducted either by EPA or by the manufacturer. Compliance with standards is required not only at certification but throughout a vehicle's useful life, so that testing requirements may continue post-certification. To assure each engine and vehicle complies during its useful life, EPA may apply an adjustment factor to account for vehicle emission control deterioration or variability in use (section 206(a)). EPA establishes the test procedures under which compliance with the CAA emissions standards is measured. EPA's testing authority under the CAA is broad and flexible.

Under CAA section 207, manufacturers are required to provide emission-related warranties. The emission-related warranty period for HD engines and vehicles under CAA section 207(i) is ''the period established by the Administrator by regulation (promulgated prior to November 15, 1990) for such purposes unless the Administrator subsequently modifies such regulation.'' For HD vehicles, part 1037 currently specifies that the emission-related warranty for Light HD vehicles is 5 years or 50,000 miles and for Medium HD and Heavy HD vehicles is 5 years or 100,000 miles, and specifies the components covered for such vehicles.[196] Section 207 of the CAA also grants EPA broad authority to require manufacturers to remedy nonconformity if EPA determines there are a substantial number of noncomplying vehicles. Additional aspects of EPA's legal authority are more fully discussed in the HD GHG Phase 1 final rule.[197] Further discussion of EPA's authority under CAA section 202(a)(1)–(2) may also be found in the HD GHG Phase 1 final rule.

With regard to the specific technologies that could be used to meet the emission standards promulgated under the statutory authorities discussed in this Section I.D, EPA's rules have historically not required the use of any particular technology, but rather have allowed manufacturers to use any technology that demonstrates the engine or vehicle meets the standards over the applicable test procedures. Similarly, in determining the standards, EPA appropriately considers updated data and analysis on pollution control technologies, without a priori limiting its consideration to a particular set of technologies. Given the continuous development of pollution control technologies since the early days of the CAA, this approach means that EPA routinely considers novel and projected technologies developed or refined since the time of the CAA's enactment, including for instance, electric vehicle technologies. In requiring EPA to consider lead time that takes into consideration development and application of technology when setting standards before such standards may take effect, Congress directed EPA to consider future technological advancements and innovation rather than limiting the Agency to setting standards that reflect only technologies in place at the time the standards are developed. This forward-looking regulatory approach keeps pace with real-world technological developments that have the potential to reduce emissions and comports with Congressional intent.

Section 202 does not specify or expect any particular type of motor vehicle propulsion system to remain prevalent, and it was clear as early as the 1960s that ICE vehicles might be inadequate to achieve the country's air quality goals.

[192] Additionally, with respect to regulation of vehicular GHG emissions, EPA is not ''required to treat NHTSA's . . . regulations as establishing the baseline for the [section 202(a) standards].'' Coalition for Responsible Regulation, 684 F.3d at 127 (noting that the section 202(a) standards provide ''benefits above and beyond those resulting from NHTSA's fuel-economy standards'').

[193] 76 FR 57129, September 15, 2011.

[194] 81 FR 73478, 73512, October 25, 2016.

[195] See also; Permian Basin Area Rate Cases, 390 U.S. 747, 797 (1968) (same); *Federal Power Commission* v. *Conway Corp.,* 426 U.S. 271, 278 (1976) (same); *Exxon Mobil Gas Marketing Co.* v. *Federal Energy Regulatory Comm'n,* 297 F. 3d 1071, 1084 (D.C. Cir. 2002) (same).

[196] See 40 CFR 1037.120.

[197] 76 FR 57129–57130, September 15, 2011.

In 1967, the Senate Committees on Commerce and Public Works held five days of hearings on ''electric vehicles and other alternatives to the internal combustion engine,'' which Chairman Magnuson opened by saying ''The electric will help alleviate air pollution. . . . The electric car does not mean a new way of life, but rather it is a new technology to help solve the new problems of our age.'' [198] In a 1970 message to Congress seeking a stronger CAA, President Nixon stated he was initiating a program to develop ''an unconventionally powered, virtually pollution free automobile'' because of the possibility that ''the sheer number of cars in densely populated areas will begin outrunning the technological limits of our capacity to reduce pollution from the internal combustion engine.'' [199]

Since the earliest days of the CAA, Congress has emphasized that the goal of section 202 is to address air quality hazards from motor vehicles, not to simply reduce emissions from internal combustion engines to the extent feasible. In the Senate Report accompanying the 1970 CAA Amendments, Congress made clear the EPA ''is expected to press for the development and application of improved technology rather than be limited by that which exists'' and identified several ''unconventional'' technologies that could successfully meet air quality-based emissions targets for motor vehicles.[200] In the 1970 amendments Congress further demonstrated its recognition that developing new technology to ensure that pollution control keeps pace with economic development is not merely a matter of refining the ICE, but requires considering new types of motor vehicle propulsion. Congress provided EPA with authority to fund the development of ''low emission alternatives to the present internal combustion engine'' as well as a program to encourage Federal purchases of ''low-emission vehicles.'' *See* CAA section 104(a)(2) (previously codified as CAA section 212). Congress also adopted section 202(e) expressly to grant the Administrator discretion regarding the certification of vehicles and engines based on ''new power sources or propulsion system[s],'' that is to say, power sources and propulsion systems beyond the existing internal combustion engine and fuels available at the time of the statute's enactment, if those vehicles emitted pollutants which the Administrator judged contributed to dangerous air pollution but had not yet established standards for under section 202(a). As the D.C. Circuit stated in 1975, ''We may also note that it is the belief of many experts—both in and out of the automobile industry—that air pollution cannot be effectively checked until the industry finds a substitute for the conventional automotive power plant–the reciprocating internal combustion (*i.e.,* ''piston'') engine. . . . It is clear from the legislative history that Congress expected the Clean Air Amendments to force the industry to broaden the scope of its research—to study new types of engines and new control systems.'' *International Harvester Co.* v. *Ruckelshaus,* 478 F.2d 615, 634–35 (D.C. Cir. 1975).

Since that time, Congress has continued to emphasize the importance of technology development to achieving the goals of the CAA. In the 1990 amendments, Congress instituted a clean fuel vehicles program to promote further progress in emissions reductions, which also applied to motor vehicles as defined under section 216, see CAA section 241(1), and explicitly defined motor vehicles qualifying under the program as including vehicles running on an alternative fuel or ''power source (including electricity),'' CAA section 241(2). Congress also directed EPA to phase-in certain section 202(a) standards, see CAA section 202(g)–(j),[201] which confirms EPA's authority to promulgate standards, such as fleet averages, phase-ins, and averaging, banking, and trading programs, that are fulfilled through compliance over an entire fleet, or a portion thereof, rather than through compliance by individual vehicles. As previously noted in the Executive Summary of this preamble, EPA has long included averaging provisions for complying with emission standards in the HD program and in upholding the first HD final rule that included such a provision the D.C. Circuit rejected petitioner's challenge in the absence of any clear evidence that Congress meant to prohibit averaging. *NRDC* v. *Thomas,* 805 F.2d 410, 425 (D.C. Cir. 1986). In the subsequent 1990 amendments, Congress, noting *NRDC* v. *Thomas,* opted to let the existing law ''remain in effect,'' reflecting that ''[t]he intention was to retain the status quo,'' *i.e.,* EPA's existing authority to allow averaging.[202] Averaging, banking, and trading is discussed further in Sections II and III of this preamble; additional history of ABT is discussed in EPA's Answering Brief in *Texas* v. *EPA* (D.C. Cir., 22–1031, at § IV.A–B).

The recently-enacted IRA[203] ''reinforces the longstanding authority and responsibility of [EPA] to regulate GHGs as air pollutants under the Clean Air Act,'' [204] and ''the IRA clearly and deliberately instructs EPA to use'' this authority by ''combin[ing] economic incentives to reduce climate pollution with regulatory drivers to spur greater reductions under EPA's CAA authorities.'' [205] To assist with this, as described in Section I.C.2, the IRA provided a number of economic incentives for HD ZEVs and the infrastructure necessary to support them, and specifically affirms Congress's previously articulated statements that non-ICE technologies will be a key component of achieving emissions reductions from the mobile source sector, including the HD industry sector.[206] The Congressional Record reflects that ''Congress recognizes EPA's longstanding authority under CAA Section 202 to adopt standards that rely on zero emission technologies, and Congress expects that future EPA regulations will increasingly rely on and incentivize zero-emission vehicles as appropriate.'' [207]

Consistent with Congress's intent, EPA's CAA Title II emission standards have been based on and stimulated the development of a broad set of advanced technologies, such as electronic fuel injection systems, gasoline catalytic convertors, diesel particulate filters, diesel NO_X reduction catalysts, gasoline direct injection fuel systems, active aerodynamic grill shutters, and advanced transmission technologies, which have been the building blocks of

[198] *Electric Vehicles and Other Alternatives to the Internal Combustion Engine: Joint Hearings before the Comm. On Commerce and the Subcomm. On Air and Water Pollution of the Comm. On Pub. Works,* 90th Cong. (1967).

[199] Richard Nixon, Special Message to the Congress on Environmental Quality (Feb. 10, 1970), *https://www.presidency.ucsb.edu/documents/special-message-the-congress-environmental-quality.*

[200] S. Rep. No. 91–1196, at 24–27 (1970).

[201] See, *e.g.,* CAA section 202(h), which requires that the regulations EPA promulgates under CAA section 202(a) for light-duty trucks over 6,000 pounds. GVWR must contain standards that provide that the specified numeric emission standards will be met by specified percentages of each manufacturer's sales volume of such trucks, depending on the MY (*e.g.,* 50% for MY 1996).

[202] 136 Cong. Rec. 36,713, 1990 WL 1222468 at *1136 Cong. Rec. 35,367, 1990 WL 1222469 at *1.

[203] Inflation Reduction Act, Public Law 117–169, 136 Stat. 1818, (2022), available at *https://www.congress.gov/117/bills/hr5376/BILLS-117hr5376enr.pdf.*

[204] 168 Cong. Rec. E868–02 (daily ed. Aug. 12, 2022) (statement of Rep. Pallone).

[205] 168 Cong. Rec. E879–02, at 880 (daily ed. Aug. 26, 2022) (statement of Rep. Pallone).

[206] *See* Inflation Reduction Act, Public Law 117–169, at §§ 13204, 13403, 13404, 13501, 13502, 50142–50145, 50151–50153, 60101–60104, 70002 136 Stat. 1818, (2022), available at *https://www.congress.gov/117/bills/hr5376/BILLS-117hr5376enr.pdf.*

[207] 168 Cong. Rec. E879–02, at 880 (daily ed. Aug. 26, 2022) (statement of Rep. Pallone).

heavy-duty vehicle designs and have yielded not only lower pollutant emissions, but improved vehicle performance, reliability, and durability. As previously discussed, beginning in 2011, EPA has set HD vehicle and engine standards under section 202(a)(1)–(2) for GHGs.[208] Manufacturers have responded to standards over the past decade by continuing to develop and deploy a wide range of technologies, including more efficient engine designs, transmissions, aerodynamics, and tires, air conditioning systems that contribute to lower GHG emissions, as well as vehicles based on methods of propulsion beyond diesel- and gasoline-fueled ICE vehicles, including ICE running on alternative fuels (such as natural gas, biodiesel, renewable diesel, methanol, and other fuels), as well as various levels of electrified vehicle technologies from mild hybrids, to strong hybrids, and up through battery electric vehicles and fuel cell electric vehicles. In addition, the continued application of performance-based standards take into consideration averaging provisions that provide an opportunity for all technology improvements and innovation to be reflected in a vehicle manufacturers' compliance results.

With regard to EPA's proposed revised preemption regulations regarding locomotives described in Section X of the preamble, statutory authority is found in CAA section 209. CAA section 209(e)(1)(B), 42 U.S.C. 7543(e)(1)(B), prohibits states and political subdivisions thereof from adopting or attempting to enforce any standard or other requirement relating to the control of emissions from new locomotives or new engines used in locomotives. However, CAA section 209(e)(2)(A)–(B), 42 U.S.C. 7543(e)(2)(A)–(B), requires EPA to authorize, after notice and an opportunity for public hearing, California to adopt and enforce standards and other requirements relating to control of emissions from other nonroad vehicles or engines provided certain criteria are met, and allows states other than California to adopt and enforce, after notice to EPA, such standards provided they are equivalent to California's authorized standards. CAA section 209(e)(2)(B) then requires EPA to issue regulations to implement subsection 209(e).

E. Coordination With Federal and State Partners

Executive Order 14037 directs EPA and DOT to coordinate, as appropriate and consistent with applicable law, during consideration of this rulemaking. EPA has coordinated and consulted with DOT/NHTSA, both on a bilateral level during the development of the proposed program as well as through the interagency review of the EPA proposal led by the Office of Management and Budget. EPA has set some previous heavy-duty vehicle GHG emission standards in joint rulemakings where NHTSA also established heavy-duty fuel efficiency standards. In the light-duty GHG emission rulemaking establishing standards for model years 2023 through 2026, EPA and NHTSA concluded that it was appropriate to coordinate and consult but not to engage in joint rulemaking. EPA has similarly concluded that it is not necessary for this EPA proposal to be issued in a joint action with NHTSA. In reaching this conclusion, EPA notes there is no statutory requirement for joint rulemaking and that the agencies have different statutory mandates and their respective programs have always reflected those differences. As the Supreme Court has noted, ''EPA has been charged with protecting the public's 'health' and 'welfare,' a statutory obligation wholly independent of DOT's mandate to promote energy efficiency.'' [209] Although there is no statutory requirement for EPA to consult with NHTSA, EPA has consulted with NHTSA in the development of this proposal. For example, staff of the two agencies met frequently to discuss various technical issues and to share technical information.

EPA also has consulted with other federal agencies in developing this proposal, including the Federal Energy Regulatory Commission, the Department of Energy and several national labs. EPA collaborates with DOE and Argonne National Laboratory on battery cost analyses and critical materials forecasting. EPA also coordinates with the Joint Office of Energy and Transportation on charging infrastructure. EPA and the Oak Ridge National Laboratory collaborate on energy security issues. EPA also participates in the Federal Consortium for Advanced Batteries led by DOE and the Joint Office of Energy and Transportation. EPA and DOE also have entered into a Joint Memorandum of Understanding to provide a framework for interagency cooperation and consultation on electric sector resource adequacy and operational reliability.[210]

E.O. 14037 also directs EPA to coordinate with California and other states that are leading the way in reducing vehicle emissions, as appropriate and consistent with applicable law, during consideration of this rulemaking. EPA has engaged with the California Air Resources Board on technical issues in developing this proposal. EPA has considered certain aspects of the CARB Advanced Clean Trucks Rule, as discussed elsewhere in this document. We also have engaged with other states, including members of the National Association of Clean Air Agencies, the Association of Air Pollution Control Agencies, the Northeast States for Coordinated Air Use Management, and the Ozone Transport Commission.

F. Stakeholder Engagement

EPA has conducted extensive engagement with a diverse range of interested stakeholders in developing this proposal. We have engaged with those groups with whom E.O. 14037 specifically directs EPA to engage, including labor unions, states, industry, environmental justice organizations and public health experts. In addition, we have engaged with environmental NGOs, vehicle manufacturers, technology suppliers, dealers, utilities, charging providers, Tribal governments, and other organizations. For example, in April–May 2022, EPA held a series of engagement sessions with organizations representing all of these stakeholder groups so that EPA could hear early input in developing its proposal. EPA has continued engagement with many of these stakeholders throughout the development of this proposal. EPA looks forward to hearing from all stakeholders through comments on this proposal and during the public hearing.

II. Proposed CO_2 Emission Standards

Under our CAA section 202(a)(1)–(2) authority, and consistent with E.O. 14037, we are proposing new GHG standards for MYs 2027 through 2032 and later HD vehicles. We are retaining and not reopening the nitrous oxide (N_2O), methane (CH_4), and CO_2 emission standards that apply to heavy-duty engines, the HFC emission standards that apply to heavy-duty vehicles, and the general compliance structure of existing 40 CFR part 1037 except for some proposed revisions described in

[208] 76 FR 57106, September 15, 2011.

[209] *Massachusetts* v. *EPA,* 549 U.S. at 532.

[210] Joint Memorandum on Interagency Communication and Consultation on Electric Reliability, U.S. Department of Energy and U.S. Environmental Protection Agency, March 8, 2023.

Section III.[211] In this Section II, we describe our assessment that these stringent standards are appropriate and feasible considering lead time, costs, and other factors. These proposed Phase 3 standards include (1) revised GHG standards for many MY 2027 HD vehicles, and (2) new GHG standards starting in MYs 2028 through 2032. The proposed standards do not mandate the use of a specific technology, and EPA anticipates that a compliant fleet under the proposed standards would include a diverse range of technologies, including ZEV and ICE vehicle technologies. In developing the proposed standards, EPA has considered the key issues associated with growth in penetration of zero-emission vehicles, including charging infrastructure and hydrogen production. In this section, we describe our assessment of the appropriateness and feasibility of these proposed standards and present a technology pathway for achieving each of those standards through increased ZEV adoption. In this section, we also present and request comment on an alternative that would provide a more gradual phase-in of the standards. As described in Section II.H., EPA also requests comment on setting GHG standards starting in MYs 2027 through 2032 that would reflect: values less stringent than the lower stringency alternative for certain market segments, values in between the proposed standards and the alternative standards, values in between the proposed standards and those that would reflect ZEV adoption levels (*i.e.,* percent of ZEVs in production volumes) used in California's ACT, values that would reflect the level of ZEV adoption in the ACT program, and values beyond those that would reflect ZEV adoption levels in ACT such as the 50- to 60-percent ZEV adoption range.

In the beginning of this section, we first describe the public health and welfare need for GHG emission reductions (Section II.A). In Section II.B, we provide an overview of the comments the Agency received in response to the GHG standards previously proposed as part of the HD2027 NPRM. In Section II.C, we provide a brief overview of the existing CO_2 emission standards that we promulgated in HD GHG Phase 2. Section II.D contains our technology assessment and Section II.E includes our assessment of technology costs, EVSE costs, operating costs, and payback. Section II.F includes the proposed standards and the analysis demonstrating the feasibility and Section II.G discusses the feasibility and appropriateness of the proposed emission standards under the Clean Air Act. Section II.H presents potential alternatives to the proposed standards, including requests for comment on standards other than those proposed. Finally, Section II.I summarizes our consideration of small businesses.

A. Public Health and Welfare Need for GHG Emission Reductions

The transportation sector is the largest U.S. source of GHG emissions, representing 27 percent of total GHG emissions.[212] Within the transportation sector, heavy-duty vehicles are the second largest contributor, at 25 percent.[213] GHG emissions have significant impacts on public health and welfare as set forth in EPA's 2009 Endangerment and Cause or Contribute Findings under CAA section 202(a) and as evidenced by the well-documented scientific record.[214]

Elevated concentrations of GHGs have been warming the planet, leading to changes in the Earth's climate including changes in the frequency and intensity of heat waves, precipitation, and extreme weather events; rising seas; and retreating snow and ice. The changes taking place in the atmosphere as a result of the well-documented buildup of GHGs due to human activities are altering the climate at a pace and in a way that threatens human health, society, and the natural environment. While EPA is not making any new scientific or factual findings with regard to the well-documented impact of GHG emissions on public health and welfare in support of this rule, EPA is providing some scientific background on climate change to offer additional context for this rulemaking and to increase the public's understanding of the environmental impacts of GHGs.

Extensive additional information on climate change is available in the scientific assessments and the EPA documents that are briefly described in this section, as well as in the technical and scientific information supporting them. One of those documents is EPA's 2009 Endangerment and Cause or Contribute Findings for Greenhouse Gases Under section 202(a) of the CAA (74 FR 66496, December 15, 2009). In the 2009 Endangerment Finding, the Administrator found under section 202(a) of the CAA that elevated atmospheric concentrations of six key well-mixed GHGs—CO_2, methane (CH_4), nitrous oxide (N_2O), hydrofluorocarbons (HFCs), perfluorocarbons (PFCs), and sulfur hexafluoride (SF_6)—''may reasonably be anticipated to endanger the public health and welfare of current and future generations'' (74 FR 66523). The 2009 Endangerment Finding, together with the extensive scientific and technical evidence in the supporting record, documented that climate change caused by human emissions of GHGs (including HFCs) threatens the public health of the U.S. population. It explained that by raising average temperatures, climate change increases the likelihood of heat waves, which are associated with increased deaths and illnesses (74 FR 66497). While climate change also increases the likelihood of reductions in cold-related mortality, evidence indicates that the increases in heat mortality will be larger than the decreases in cold mortality in the United States (74 FR 66525). The 2009 Endangerment Finding further explained that compared with a future without climate change, climate change is expected to increase tropospheric ozone pollution over broad areas of the United States., including in the largest metropolitan areas with the worst tropospheric ozone problems, and thereby increase the risk of adverse effects on public health (74 FR 66525). Climate change is also expected to cause more intense hurricanes and more frequent and intense storms of other types and heavy precipitation, with impacts on other areas of public health, such as the potential for increased deaths, injuries, infectious and waterborne diseases, and stress-related disorders (74 FR 66525). Children, the elderly, and the poor are among the most vulnerable to these climate-related health effects (74 FR 66498).

[211] See the HD GHG Phase 2 rule (81 FR 73478, October 25, 2016), the Heavy-Duty Engine and Vehicle Technical Amendment rule (86 FR 34308, June 29, 2021), and the HD2027 rule (88 FR 4296, January 24, 2023). In this rulemaking, EPA is not reopening any portion of our heavy-duty compliance provisions, flexibilities, and testing procedures, including those in 40 CFR parts 1037, 1036, and 1065, other than those specifically identified in this document as the subject of our proposal or a solicitation for comment. For example, while EPA is proposing to revise discrete elements of the HD ABT program, EPA is not reopening the general availability of ABT.

[212] Inventory of U.S. Greenhouse Gas Emissions and Sinks: 1990–2020 (EPA–430–R–22–003), published April 2022.

[213] *Ibid.*

[214] *See* 74 FR 66496, December 15, 2009; see also EPA's Denial of Petitions Relating to the Endangerment and Cause or Contribute Findings for Greenhouse Gases Under Section 202(a) of the Clean Air Act, *available at https://www.epa.gov/system/files/documents/2022-04/decision_document.pdf.*

The 2009 Endangerment Finding also documented, together with the extensive scientific and technical evidence in the supporting record, that climate change touches nearly every aspect of public welfare [215] in the United States., including: changes in water supply and quality due to changes in drought and extreme rainfall events; increased risk of storm surge and flooding in coastal areas and land loss due to inundation; increases in peak electricity demand and risks to electricity infrastructure; and the potential for significant agricultural disruptions and crop failures (though offset to a lesser extent by carbon fertilization). These impacts are also global and may exacerbate problems outside the United States. that raise humanitarian, trade, and national security issues for the U.S. (74 FR 66530).

The most recent information demonstrates that the climate is continuing to change in response to the human-induced buildup of GHGs in the atmosphere. Recent scientific assessments show that atmospheric concentrations of GHGs have risen to a level that has no precedent in human history and that they continue to climb, primarily because of both historic and current anthropogenic emissions, and that these elevated concentrations endanger our health by affecting our food and water sources, the air we breathe, the weather we experience, and our interactions with the natural and built environments.

Global average temperature has increased by about 1.1 degrees Celsius (°C) (2.0 degrees Fahrenheit (°F)) in the 2011–2020 decade relative to 1850–1900. The IPCC determined with medium confidence that this past decade was warmer than any multi-century period in at least the past 100,000 years. Global average sea level has risen by about 8 inches (about 21 centimeters (cm)) from 1901 to 2018, with the rate from 2006 to 2018 (0.15 inches/year or 3.7 millimeters (mm)/year) almost twice the rate over the 1971 to 2006 period, and three times the rate of the 1901 to 2018 period. The rate of sea level rise during the 20th Century was higher than in any other century in at least the last 2,800 years. The CO_2 being absorbed by the ocean has resulted in changes in ocean chemistry due to acidification of a magnitude not seen in 65 million years [216] putting many marine species—particularly calcifying species—at risk. Human-induced climate change has led to heatwaves and heavy precipitation becoming more frequent and more intense, along with increases in agricultural and ecological droughts [217] in many regions.[218] The NCA4 found that it is very likely (greater than 90 percent likelihood) that by mid-century, the Arctic Ocean will be almost entirely free of sea ice by late summer for the first time in about 2 million years.[219] Coral reefs will be at risk for almost complete (99 percent) losses with 1 °C (1.8 °F) of additional warming from today (2 °C or 3.6 °F since preindustrial). At this temperature, between 8 and 18 percent of animal, plant, and insect species could lose over half of the geographic area with suitable climate for their survival, and 7 to 10 percent of rangeland livestock would be projected to be lost. The IPCC similarly found that climate change has caused substantial damages and increasingly irreversible losses in terrestrial, freshwater, and coastal and open ocean marine ecosystems.[220]

In 2016, the Administrator issued a similar finding for GHG emissions from aircraft under section 231(a)(2)(A) of the CAA.[221] In the 2016 Endangerment Finding, the Administrator found that the body of scientific evidence amassed in the record for the 2009 Endangerment Finding compellingly supported a similar endangerment finding under CAA section 231(a)(2)(A), and also found that the science assessments released between the 2009 and the 2016 Findings ''strengthen and further support the judgment that GHGs in the atmosphere may reasonably be anticipated to endanger the public health and welfare of current and future generations'' (81 FR 54424). Pursuant to the 2009 Endangerment and Cause or Contribute Findings, CAA section 202(a) requires EPA to issue standards applicable to emissions of those pollutants from new motor vehicles. See *Coalition for Responsible Regulation,* 684 F.3d at 116–125, 126–27; Massachusetts, 549 U.S. at 533. *See also Coalition for Responsible Regulation,* 684 F.3d at 127–29 (upholding EPA's light-duty GHG emission standards for MYs 2012–2016 in their entirety).[222] Since the 2016 Endangerment Finding, the climate has continued to change, with new observational records being set for several climate indicators such as global average surface temperatures, GHG concentrations, and sea level rise. Additionally, major scientific assessments continue to be released that further advance our understanding of the climate system and the impacts that GHGs have on public health and welfare both for current and future generations. These updated observations and projections document the rapid rate of current and future climate change both globally and in the United States.[223] [224] [225] [226]

[215] The CAA states in section 302(h) that ''[a]ll language referring to effects on welfare includes, but is not limited to, effects on soils, water, crops, vegetation, manmade materials, animals, wildlife, weather, visibility, and climate, damage to and deterioration of property, and hazards to transportation, as well as effects on economic values and on personal comfort and well-being, whether caused by transformation, conversion, or combination with other air pollutants.'' 42 U.S.C. 7602(h).

[216] IPCC (2018): Global Warming of 1.5 °C. An IPCC Special Report on the impacts of global warming of 1.5 °C above pre-industrial levels and related global greenhouse gas emission pathways, in the context of strengthening the global response to the threat of climate change, sustainable development, and efforts to eradicate poverty [Masson-Delmotte, V., P. Zhai, H.-O. Portner, D. Roberts, J. Skea, P.R. Shukla, A. Pirani, W. Moufouma-Okia, C. Pe´an, R. Pidcock, S. Connors, J.B.R. Matthews, Y. Chen, X. Zhou, M.I. Gomis, E. Lonnoy, T. Maycock, M. Tignor, and T. Waterfield (eds.)].

[217] These are drought measures based on soil moisture.

[218] IPCC (2021): Summary for Policymakers. In: Climate Change 2021: The Physical Science Basis. Contribution of Working Group I to the Sixth Assessment Report of the Intergovernmental Panel on Climate Change [Masson-Delmotte, V., P. Zhai, A. Pirani, S.L. Connors, C. Pe´an, S. Berger, N. Caud, Y. Chen, L. Goldfarb, M.I. Gomis, M. Huang, K. Leitzell, E. Lonnoy, J.B.R. Matthews, T.K. Maycock, T. Waterfield, O. Yelekçi, R. Yu and B. Zhou (eds.)]. Cambridge University Press.

[219] USGCRP (2018): Impacts, Risks, and Adaptation in the United States: Fourth National Climate Assessment, Volume II [Reidmiller, D.R., C.W. Avery, D.R. Easterling, K.E. Kunkel, K.L.M. Lewis, T.K. Maycock, and B.C. Stewart (eds.)]. U.S. Global Change Research Program, Washington, DC, USA, 1515 pp. doi: 10.7930/NCA4.2018.

[220] IPCC (2022): Summary for Policymakers [H.-O. Pörtner, D.C. Roberts, E.S. Poloczanska, K. Mintenbeck, M. Tignor, A. Alegría, M. Craig, S. Langsdorf, S. Löschke, V. Möller, A. Okem (eds.)]. In: Climate Change 2022: Impacts, Adaptation and Vulnerability. Contribution of Working Group II to the Sixth Assessment Report of the Intergovernmental Panel on Climate Change [H.-O. Pörtner, D.C. Roberts, M. Tignor, E.S. Poloczanska, K. Mintenbeck, A. Alegría, M. Craig, S. Langsdorf, S. Löschke, V. Möller, A. Okem, B. Rama (eds.)]. Cambridge University Press, Cambridge, UK and New York, NY, USA, pp. 3–33, doi:10.1017/9781009325844.001.

[221] ''Finding that Greenhouse Gas Emissions from Aircraft Cause or Contribute to Air Pollution That May Reasonably Be Anticipated To Endanger Public Health and Welfare.'' 81 FR 54422, August 15, 2016. (''2016 Endangerment Finding'').

[222] See also EPA's Denial of Petitions Relating to the Endangerment and Cause or Contribute Findings for Greenhouse Gases Under Section 202(a) of the Clean Air Act (Apr. 2022), available at *https://www.epa.gov/system/files/documents/2022-04/decision_document.pdf.*

[223] USGCRP, 2018: Impacts, Risks, and Adaptation in the United States: Fourth National Climate Assessment, Volume II [Reidmiller, D.R., C.W. Avery, D.R. Easterling, K.E. Kunkel, K.L.M. Lewis, T.K. Maycock, and B.C. Stewart (eds.)]. U.S. Global Change Research Program, Washington, DC, USA, 1515 pp. doi: 10.7930/NCA4.2018. *https://nca2018.globalchange.gov.*

[224] Roy, J., P. Tschakert, H. Waisman, S. Abdul Halim, P. Antwi-Agyei, P. Dasgupta, B. Hayward,

Continued

B. Summary of Comments Received From HD2027 NPRM

We received a significant number of comments to the proposed updates to the HD GHG emission standards proposed as part of the HD2027 NPRM.[227] A number of commenters provided support and reasoning for revising the HD CO_2 standards while a number of other commenters expressed concerns about reopening the HD GHG Phase 2 program. This Section II.B includes a summary of the comments received. Commenters who would like EPA to further consider in this rulemaking any relevant comments that they provided on the HD2027 NPRM regarding proposed HD vehicle GHG standards for the MYs at issue in this proposal must resubmit those comments to EPA during this proposal's comment period. EPA considered the comments received in response to the HD2027 NPRM when developing this Phase 3 proposal. The proposed standards were developed based on a more in-depth analysis of the potential for electrification of the heavy-duty sector and attendant emissions reductions than was used in the HD2027 NPRM analysis and is described in Sections II.D through II.F. This analysis addresses many of the concerns raised in comments summarized in the following subsections, such as the need to consider a wide range of HD applications, technology and operating costs of BEVs, the impact of heating and cooling on the energy demands of electric vehicles, infrastructure concerns, and the potential impact of weight and space for packaging of batteries. This analysis also includes consideration of the IRA provisions that provide significant financial incentives for the heavy-duty ZEV market and reduce or eliminate the cost difference between ICE vehicles and ZEVs. In consideration of some commenters' concerns about the time needed for research plans, product development, manufacturing investment, and charging infrastructure, we discuss these topics in our technical analysis supporting this NPRM. As described in Section II.H., EPA also requests comment on setting GHG standards starting in MYs 2027 through 2032 that would reflect: values less stringent than the lower stringency alternative for certain market segments, values in between the proposed standards and the alternative standards, values in between the proposed standards and those that would reflect ZEV adoption levels (*i.e.,* percent of ZEVs in production volumes) used in California's ACT, values that would reflect the level of ZEV adoption in the ACT program, and values beyond those that would reflect ZEV adoption levels in ACT such as the 50- to 60-percent ZEV adoption range.

1. Summary of Comments in Support of Revising the Phase 2 GHG Emission Standards for MY 2027

Many commenters, including non-governmental organizations, states, and mass comment campaigns, provided support for revising the targeted HD vehicle MY 2027 CO_2 emission standards to reflect the increase in electrification of the HD market and attendant potential for additional emission reductions. Additionally, many commenters suggested that EPA should further reduce the emission standards in MYs 2027 through 2029 beyond the levels proposed because of the accelerating adoption of HD ZEVs. Many commenters also highlighted that five additional states besides California adopted the California ACT program in late 2021 and noted that this would also drive additional electrification in the HD segment of the transportation sector.[228] Finally, some commenters pointed to the ''Multi-State Medium and Heavy-Duty Zero Emission Vehicle Memorandum of Understanding'' (Multi-State MOU) signed by 17 states and the District of Columbia establishing goals to increase HD electric vehicle sales in those jurisdictions to 30 percent by 2030 and 100 percent by 2050. Commenters also provided a number of reports that evaluate the potential of electrification of the HD sector in terms of adoption rates, costs, and other factors.

Some of the commenters provided specific recommendations for HD ZEV adoption rates in the MYs 2027 through 2029 timeframe. For example, the American Council for an Energy-Efficient Economy (ACEEE) suggested that, based on a recent NREL study, EPA could set standards that reflect 20 percent electrification in MY 2027 and up to 40 percent in MY 2029.[229] The Environmental Defense Fund (EDF) suggested standards to achieve 80 percent sales of ZEVs for new school and transit buses and 40 percent of new Class 4–7 vehicles and Class 8 short-haul vehicles by MY 2029.[230] EDF also referenced an analysis from Environmental Resources Management (ERM) that included a range of scenarios, with midpoint scenarios projecting HD ZEV deployment in excess of 20 percent in MY 2029 and more optimistic scenarios projecting HD ZEV sales of over 33 percent of all Class 4–8 single unit trucks, short-haul tractors, and school and transit buses in MY 2029.[231] The ICCT suggested HD ZEV ranges of 15 to 40 percent depending on the vehicle segment in MY 2027, increasing up to 40 to 80 percent in MY 2029.[232] Moving Forward Network suggested that ZEVs could comprise 20 percent of new sales in MY 2027 and increase 10 percent each year, with a goal of 100 percent by MY 2035.[233] Tesla referenced a NREL study, a forecast from Americas Commercial Transportation Research Co. (ACT Research) that projected a 26 percent sales share of HD ZEVs nationwide in 2030, and another study that projected 25 percent of the global HD fleet will be electric by 2030.[234] Other commenters,

M. Kanninen, D. Liverman, C. Okereke, P.F. Pinho, K. Riahi, and A.G. Suarez Rodriguez, 2018: Sustainable Development, Poverty Eradication and Reducing Inequalities. In: Global Warming of 1.5 °C. An IPCC Special Report on the impacts of global warming of 1.5 °C above pre-industrial levels and related global greenhouse gas emission pathways, in the context of strengthening the global response to the threat of climate change, sustainable development, and efforts to eradicate poverty [Masson-Delmotte, V., P. Zhai, H.-O. Pörtner, D. Roberts, J. Skea, P.R. Shukla, A. Pirani, W. Moufouma-Okia, C. Péan, R. Pidcock, S. Connors, J.B.R. Matthews, Y. Chen, X. Zhou, M.I. Gomis, E. Lonnoy, T. Maycock, M. Tignor, and T. Waterfield (eds.)]. In Press. *https://www.ipcc.ch/sr15/chapter/chapter-5*.

[225] National Academies of Sciences, Engineering, and Medicine. 2019. Climate Change and Ecosystems. Washington, DC: The National Academies Press. *https://doi.org/10.17226/25504*.

[226] NOAA National Centers for Environmental Information, State of the Climate: Global Climate Report for Annual 2020, published online January 2021, retrieved on February 10, 2021, from *https://www.ncdc.noaa.gov/sotc/global/202013*.

[227] For the complete set of comments, please see U.S. EPA, ''Control of Air Pollution from New Motor Vehicles: Heavy-Duty Engine and Vehicle Standards—Response to Comments.'' (RTC) Section 28. Docket EPA–HQ–OAR–201 9–0055.

[228] *Ibid.* Many commenters in HD2027 RTC Section 28.1.1 pointed to ACT.

[229] ACEEE comments on the HD2027 NPRM. See Docket Entry EPA–HQ–OAR–2019–0055–2852–A1. Referencing Catherine Ledna et al., 'Decarbonizing Medium-& Heavy-Duty On-Road Vehicles: Zero-Emission Vehicles Cost Analysis' (NREL, March 2022), available at *https://www.nrel.gov/docs/fy22osti/82081.pdf*.

[230] EDF comments on the HD2027 NPRM. See Docket Entry EPA–HQ–OAR–2019–0055–1265–A1, pp.16–17.

[231] EDF comments on the HD2027 NPRM. See Docket Entry EPA–HQ–OAR–2019–0055–1265–A1 (citing Rachel MacIntosh, Sophie Tolomiczenko, Grace Van Horn. April 2022. Electric Vehicle Market Update: Manufacturer Commitments and Public Policy Initiatives Supporting Electric Mobility in the U.S. and Worldwide, ERM for EDF, Version 6 (April 2022), available at *http://blogs.edf.org/climate411/files/2022/04/electric_vehicle_market_report_v6_april2022.pdf*.

[232] ICCT Comments on the HD2027 NPRM. See Docket Entry EPA–HQ–OAR–2019–0055–1211–A1, p. 6.

[233] Moving Forward Network Comments on the HD2027 NPRM. See Docket Entry EPA–HQ–OAR–2019–0055–1277–A1, pp. 19–20.

[234] Tesla Comments on the HD2027 NPRM. See Docket Entry EPA–HQ–OAR–2019–0055–1219–A1,

such as AMPLY Power (rebranded to bp plus), suggest that the federal CO_2 emission standards should achieve ZEV deployments on par with California's ACT program.[235]

Some commenters also referred to manufacturer statements regarding such manufacturers' projections for HD electrification. For example, ACEEE pointed to Volvo's and Scania's announcements for global electrification targets of 50 percent by 2030.[236] EDF pointed to several manufacturer's statements.[237] First, EDF noted Daimler Trucks North America has committed to offering only carbon-neutral trucks in the United States by 2039 and expects that by 2030, as much as 60 percent of its sales will be ZEVs.[238] Second, EDF noted Navistar has a goal of having 50 percent of its sales volume be ZEVs by 2030, and its commitment to achieve 100 percent zero emissions by 2040 across all operations and carbon-neutrality by 2050.[239]

Finally, some commenters discussed hydrogen-powered ICEs and asserted that there are benefits associated with that technology as a potential CO_2-reducing technology for the HD segment of the transportation sector.[240]

2. Summary of Comments Expressing Concern With Revising the Phase 2 GHG Emission Standards for MY 2027

Some commenters raised concerns with the HD2027 NPRM proposed changes to certain HD GHG Phase 2 CO_2 emission standards. Some highlighted the significant investment and lead time required for development and verification of durability of ZEVs and stated EPA should not adopt standards that project broad adoption of heavy-duty ZEVs.

Some commenters stated that EPA should not reopen the HD GHG Phase 2 emission standards.[241] Several manufacturers and suppliers pointed to the need for regulatory certainty and stability, stating that reopening the Phase 2 standards would threaten their long-term investments and production planning. Some commenters went further and stated that certain technologies that EPA projected for use to meet the existing Phase 2 emission standards are seeing lower-than-expected penetration rates in MY 2021; these commenters suggested that EPA relax the Phase 2 standards.[242] The technologies highlighted by the commenters suggesting that EPA relax Phase 2 standards include tamper-resistant automatic shutdown systems, neutral idle, low rolling resistance tires, stop-start, and advanced transmission shift strategies.

Commenters also stated that it takes time to develop ZEV technologies for the wide range of HD applications. They also raised concerns regarding asserted high costs and long lead times associated with the necessary charging infrastructure, the weight impact of batteries, the impact of battery degradation and ambient temperatures on the range of electric vehicles, and the impact on operations due to the time required to charge. Commenters also raised issues regarding the upstream and lifecycle emissions impact of ZEVs, including minerals and battery manufacturing, battery disposal and recycling, potential higher tire and brake wear from electric vehicles, and the availability of minerals and other supply chain issues.

Some commenters raised concerns about the approach used in the HD2027 NPRM to project ZEV sales in MY 2027. Concerns raised by commenters include the uncertainty of the actual production levels needed to meet California ACT program requirements; that EPA has not approved a waiver for the California ACT program and, therefore, should not consider full implementation of that program; and that the current HD ZEVs are expensive.

One commenter raised concerns related to small businesses. The commenter stated that its less diverse product mix and low sales volume present challenges in meeting the proposed GHG standards in the HD2027 NPRM.

C. Background on the CO_2 Emission Standards in the HD GHG Phase 2 Program

In the Phase 2 Heavy-Duty GHG rule, we finalized GHG emission standards tailored to three regulatory categories of HD vehicles—heavy-duty pickups and vans, vocational vehicles, and combination tractors.[243] In addition, we set separate standards for the engines that power combination tractors and for the engines that power vocational vehicles. The heavy-duty vehicle CO_2 emission standards are in grams per ton-mile, which represents the grams of CO_2 emitted to move one ton of payload a distance of one mile. In promulgating the Phase 2 standards, we explained that the stringency of the Phase 2 standards were derived on a fleet average technology mix basis and that the emission averaging provisions of ABT meant that the regulations did not require all vehicles to meet the standards (contrasted with the banking and trading provisions of the HD GHG Phase 2 ABT program which were not relied upon in selecting the stringency the HD GHG Phase 2 standards). For example, we projected that diversified manufacturers would continue to use the averaging provisions in the ABT program to meet the standards on average for each of their vehicle families. In addition, the Phase 2 program established subcategories of vehicles (*i.e.,* custom chassis vocational

p.9 (citing HDT Truckinginfo, ACT: Third of Class 4–8 Vehicles to be Battery-Electric in 10 Year (June 4, 2021); Fleet Owner, Disruption in trucking technology (Jan. 13, 2020); and MJ Bradley, Medium- & Heavy-Duty Vehicles: Market Structure, Environmental Impact, and EV Readiness (Aug. 11, 2022)).

[235] AMPLY Comments on the HD2027 NPRM. See Docket Entry EPA–HQ–OAR–2019–0055–1236–A1, p. 1.

[236] ACEEE Comments on the HD2027 NPRM. See Docket Entry EPA–HQ–OAR–2019–0055–0055–2852–A1. Citing Scania, 'Scania's Electrification Roadmap,' Scania Group, November 24, 2021, *https://www.scania.com/group/en/home/newsroom/news/2021/Scanias-electrification-roadmap.html*; AB Volvo, 'Volvo Trucks Launches Electric Truck with Longer Range,' Volvo Group, January 14, 2022, *https://www.volvogroup.com/en/news-and-media/news/2022/jan/news-4158927.html*.

[237] EDF comments on the HD2027 NPRM. See Docket Entry EPA–HQ–OAR–2019–0055–1265–A1.

[238] EDF comments on the HD2027 NPRM. See Docket Entry EPA–HQ–OAR–2019–0055–1265–A1 (citing David Cullen, ''Daimler to Offer Carbon Neutral Trucks by 2039,'' (October 25, 2019), *https://www.truckinginfo.com/343243/daimler-aims-to-offer-only-co2-neutral-trucks-by-2039-in-key-markets* (last accessed October 2022) and Deborah Lockridge, ''What Does Daimler Truck Spin-off Mean for North America?,'' Trucking Info (November 11, 2021), *https://www.truckinginfo.com/10155922/what-does-daimler-truck-spin-off-mean-for-north-america* (last accessed October 2022)).

[239] EDF comments on the HD2027 NPRM. See Docket Entry EPA–HQ–OAR–2019–0055–1265–A1 (citing Navistar presentation at the Advanced Clean Transportation Expo, Long Beach, CA (May 9–11, 2022)).

[240] BorgWarner comments on the HD2027 NPRM. See Docket Entry EPA–HQ–OAR–2019–0055–1234–A1, p. 3; Westport Fuel Systems comments on the HD2027 NPRM. See Docket Entry EPA–HQ–OAR–2019–0055–1278–A1, p. 5.

[241] Daimler Trucks comments on the HD2027 NPRM. See Docket Entry EPA–HQ–OAR–2019–0055–1168–A1, p.112; Navistar Comments on the HD2027 NPRM. See Docket Entry EPA–HQ–OAR–2019–0055–1318–A1, p. 6; PACCAR Comments on the HD2027 NPRM. See Docket Entry EPA–HQ–OAR–2019–0055–1346–A1, p. 3; Truck and Engine Manufacturer's Association Comments on the HD2027 NPRM. See Docket Entry EPA–HQ–OAR–2019–0055–1203–A1, pp. 7–8; Volvo Group Comments on the HD2027 NPRM. See Docket Entry EPA–HQ–OAR–2019–0055–1324–A1, p. 7.

[242] Truck and Engine Manufacturer's Association Comments on the HD2027 NPRM. See Docket Entry EPA–HQ–OAR–2019–0055–1203–A1, p. 108.

[243] We also set standards for certain types of trailers used in combination with tractors (see 81 FR 73639, October 25, 2016). As described in Section III of this preamble, we are proposing to remove the regulatory provisions related to trailers in 40 CFR part 1037 to carry out a decision by the U.S. Court of Appeals for the D.C. Circuit, which vacated the portions of the HD GHG Phase 2 final rule that apply to trailers. *Truck Trailer Manufacturers Association* v. *EPA*, 17 F.4th 1198 (D.C. Cir. 2021).

vehicles and heavy-haul tractors) that were specifically designed to recognize the limitations of certain vehicle applications to adopt some technologies due to specialized operating characteristics or generally low sales volumes with prohibitively long payback periods. The vehicles certified to the custom chassis vocational vehicle standards are not permitted to bank or trade credits and some have limited averaging provisions under the HD GHG Phase 2 ABT program.[244]

In this proposal, we continue to expect averaging would play an important role in manufacturer strategies to meet the proposed standards. In Section II.F, we are proposing new standards for vocational vehicles and combination tractors, which we project are feasible to meet through a technology pathway where vehicle manufacturers would adopt ZEV technologies for a portion of their product lines. This Section II.C includes additional background information on these two vehicle categories. At this time, we are not proposing to update engine standards in 40 CFR 1036.108. Additionally, we intend to separately pursue a combined light-duty and medium-duty rulemaking to propose more stringent standards for complete and incomplete vehicles at or below 14,000 pounds. GVWR that are certified under 40 CFR part 86, subpart S. Manufacturers of incomplete vehicles at or below 14,000 pounds GVWR would continue to have the option of either meeting the greenhouse gas standards under 40 CFR parts 1036 and 1037, or instead meeting the greenhouse gas standards with chassis-based measurement procedures under 40 CFR part 86, subpart S.

We are continuing and are not reopening the existing approach taken in both HD GHG Phase 1 and Phase 2, that compliance with the vehicle exhaust CO_2 emission standards is based on CO_2 emissions from the vehicle. See 76 FR 57123 (September 15, 2011); see also 77 FR 51705 (August 24, 2012), 77 FR 51500 (August 27, 2012), and 81 FR 75300 (October 25, 2016). EPA's heavy-duty standards have been in place as engine- and vehicle-based standards for decades, for all engine and vehicle technologies. We estimated the upstream emission impact of the proposed standards for heavy-duty vehicles on both the refinery and electricity generation sectors, as shown in Section V, and those analyses also support the proposed CO_2 emission standards.

1. Vocational Vehicles

Vocational vehicles include a wide variety of vehicle types, spanning Class 2b-8, and serve a wide range of functions. We define vocational vehicles as all heavy-duty vehicles greater than 8,500 lb GVWR that are not certified under 40 CFR part 86, subpart S, or a combination tractor under 40 CFR 1037.106.[245] Some examples of vocational vehicles include urban delivery trucks, refuse haulers, utility service trucks, dump trucks, concrete mixers, transit buses, shuttle buses, school buses, emergency vehicles, motor homes, and tow trucks. The HD GHG Phase 2 vocational vehicle program also includes a special regulatory subcategory called vocational tractors, which covers vehicles that are technically tractors but generally operate more like vocational vehicles than line-haul tractors. These vocational tractors include those designed to operate off-road and in certain intra-city delivery routes.

The existing HD GHG Phase 2 CO_2 standards for vocational vehicles are based on the performance of a wide array of control technologies. In particular, the HD GHG Phase 2 vocational vehicle standards recognize detailed characteristics of vehicle powertrains and drivelines. Driveline improvements present a significant opportunity for reducing fuel consumption and CO_2 emissions from vocational vehicles. However, there is no single package of driveline technologies that will be equally suitable for all vocational vehicles, because there is an extremely broad range of driveline configurations available in the market. This is due in part to the variety of final vehicle build configurations, ranging from a purpose-built custom chassis to a commercial chassis that may be intended as a multi-purpose stock vehicle. Furthermore, the wide range of applications and driving patterns of these vocational vehicles leads manufacturers to offer a variety of drivelines, as each performs differently in use.

In the final HD GHG Phase 2 rule, we recognized the diversity of vocational vehicle applications by setting unique CO_2 emission standards evaluated over composite drive cycles for 23 different regulatory subcategories. The program includes vocational vehicle standards that allow the technologies that perform best at highway speeds and those that perform best in urban driving to each be properly recognized over appropriate drive cycles, while avoiding potential unintended results of forcing vocational vehicles that are designed to serve in different applications to be measured against a single drive cycle. The vehicle CO_2 emissions are evaluated using EPA's Greenhouse Gas Emissions Model (GEM) over three drive cycles, where the composite weightings vary by subcategory, with the intent of balancing the competing pressures to recognize the varying performance of technologies, serve the wide range of customer needs, and maintain a workable regulatory program.[246] The HD GHG Phase 2 primary vocational standards, therefore, contain subcategories for Regional, Multi-purpose, and Urban drive cycles in each of the three weight classes (Light Heavy-Duty (Class 2b-5), Medium Heavy-Duty (Class 6–7) and Heavy Heavy-Duty (Class 8)), for a total of nine unique subcategories.[247] These nine subcategories apply for compression-ignition (CI) vehicles. We separately, but similarly, established six subcategories of spark-ignition (SI) vehicles. In other words, there are 15 separate numerical performance-based emission standards for each model year.

EPA also established optional custom chassis categories in the Phase 2 rule in recognition of the unique technical characteristics of these applications. These categories also recognize that many manufacturers of these custom chassis are not full-line heavy-duty vehicle companies and thus do not have the same flexibilities as other firms in the use of the Phase 2 program emissions averaging program which could lead to challenges in meeting the standards EPA established for the overall vocational vehicle and combination tractor program. We therefore established optional custom chassis CO_2 emission standards for Motorhomes, Refuse Haulers, Coach Buses, School Buses, Transit Buses, Concrete Mixers, Mixed Use Vehicles, and Emergency Vehicles.[248] In total, EPA set CO_2 emission standards for 15 subcategories of vocational vehicles and eight subcategories of specialty vehicle

[244] See 40 CFR 1037.105(h)(2).

[245] See 40 CFR 1037.105(a).

[246] GEM is an EPA vehicle simulation tool used to certify HD vehicles. A detailed description of GEM can be found in the Phase 2 Regulatory Impacts Analysis or at *https://www.epa.gov/regulations-emissions-vehicles-and-engines/greenhouse-gas-emissions-model-gem-medium-and-heavy-duty*.

[247] See 40 CFR 1037.140(g) and (h).

[248] The numeric values of the optional custom chassis standards are not directly comparable to the primary vocational vehicle standards. As explained in the HD GHG Phase 2 rule, there are simplifications in GEM that produce higher or lower CO_2 emissions. 81 FR 73686–73688. October 25, 2016.

types for a total of 23 vocational vehicle subcategories.

The HD GHG Phase 2 standards phase in over a period of seven years, beginning with MY 2021. The HD GHG Phase 2 program progresses in three-year stages with an intermediate set of standards in MY 2024 and final standards in MY 2027 and later. In the HD GHG Phase 2 final rule, we identified a potential technology path for complying with each of the three increasingly stringent stages of the HD GHG Phase 2 program standards. These standards are based on the performance of more efficient engines, workday idle reduction technologies, improved transmissions including mild hybrid powertrains, axle technologies, weight reduction, electrified accessories, tire pressure systems, and tire rolling resistance improvements. We developed the Phase 2 vocational vehicle standards using the methodology where we applied fleet average technology mixes to fleet average baseline vehicle configurations, and each average baseline and technology mix was unique for each vehicle subcategory.[249] When the HD GHG Phase 2 final rule was promulgated in 2016, we established CO_2 standards on the premise that electrification of the heavy-duty market would occur in the future but was unlikely to occur at significant sales volumes in the timeframe of the program. As a result, the Phase 2 vocational vehicle CO_2 standards were not in any way premised on the application of ZEV technologies. Instead, we finalized BEV, PHEV, and FCEV advanced technology credit multipliers within the HD GHG ABT program to incentivize a transition to these technologies (see Section III of this preamble for further discussion on this program and proposed changes). Details regarding the HD GHG Phase 2 standards can be found in the HD GHG Phase 2 final rule preamble, and the HD GHG Phase 2 vocational vehicle standards are codified at 40 CFR part 1037.[250]

2. Combination Tractors

The tractor regulatory structure is attribute-based in terms of dividing the tractor category into ten subcategories based on the tractor's weight rating, cab configuration, and roof height. The tractors are subdivided into three weight ratings—Class 7 with a gross vehicle weight rating (GVWR) of 26,001 to 35,000 pounds; Class 8 with a GVWR over 33,000 pounds; and Heavy-haul with a gross combined weight rating of greater than or equal to 120,000 pounds.[251] The Class 7 and 8 tractor cab configurations are either day cab or sleeper cab. Day cab tractors are typically used for shorter haul operations, whereas sleeper cabs are often used in long haul operations. EPA set CO_2 emission standards for 10 tractor subcategories.

Similar to the vocational program, implementation of the HD GHG Phase 2 tractor standards began in MY 2021 and will be fully phased in for MY 2027. In the HD GHG Phase 2 final rule, EPA analyzed the feasibility of achieving the CO_2 standards and identified technology pathways for achieving the standards. The existing HD GHG Phase 2 CO_2 emission standards for combination tractors reflect reductions that can be achieved through improvements in the tractor's powertrain, aerodynamics, tires, idle reduction, and other vehicle systems as demonstrated using GEM. As we did for vocational vehicles, we developed a potential technology package for each of the tractor subcategories that represented a fleet average application of a mix of technologies to demonstrate the feasibility of the standard for each MY.[252] EPA did not premise the HD GHG Phase 2 CO_2 tractor emission standards on application of hybrid powertrains or ZEV technologies. However, we predicted some limited use of these technologies in MY 2021 and beyond and we finalized BEV, PHEV, and FCEV advanced technology credit multipliers within the HD GHG ABT program to incentivize a transition to these technologies (see Section III of this preamble for further discussion on this program and proposed changes). More details can be found in the HD GHG Phase 2 final rule preamble, and the HD GHG Phase 2 tractor standards are codified at 40 CFR part 1037.[253]

3. Heavy-Duty Engines

In HD GHG Phase 1, we developed a regulatory structure for CO_2, nitrous oxide (N2O), and methane (CH4) emission standards that apply to the engine, separate from the HD vocational vehicle and tractor. The regulatory structure includes separate standards for spark-ignition engines (such as gasoline engines) and compression-ignition engines (such as diesel engines), and for heavy heavy-duty (HHD), medium heavy-duty (MHD) and light heavy-duty (LHD) engines, that also apply to alternative fuel engines. We also used this regulatory structure for HD engines in HD GHG Phase 2. More details can be found in the HD GHG Phase 2 final rule preamble, and the HD GHG Phase 2 engine standards are codified at 40 CFR part 1036.[254]

4. Heavy-Duty Vehicle Average, Banking, and Trading Program

Beginning in HD GHG Phase 1, EPA adopted an averaging, banking, and trading (ABT) program for CO_2 emission credits that allows ABT within a vehicle weight class.[255] For the HD GHG Phase 2 ABT program, the three credit averaging sets for HD vehicles are Light Heavy-Duty Vehicles, Medium Heavy-Duty Vehicles, and Heavy Heavy-Duty Vehicles. This approach allows ABT between CI-powered vehicles, SI-powered vehicles, BEVs, FCEVs, and hybrid vehicles in the same weight class, which have the same regulatory useful life. Although the vocational vehicle emission standards are subdivided by Urban, Multi-purpose, and Regional regulatory subcategories, credit exchanges are currently allowed between them within the same weight class. However, these averaging sets currently exclude vehicles certified to the separate optional custom chassis standards. Finally, the ABT program currently allows credits to exchange between vocational vehicles and tractors within a weight class.

ABT is commonly used by vehicle manufacturers for the HD GHG Phase 2 program. In MY 2022, 93 percent of the vehicle families (256 out of 276 families) certified used ABT.[256] Similarly, 29 out of 40 manufacturers in MY 2022 used ABT to certify some or all of their vehicle families. Most of the manufacturers that did not use ABT produced vehicles that were certified to the optional custom chassis standards where the banking and trading components of ABT are not allowed, and averaging is limited.[257]

[249] 81 FR 73715, October 25, 2016.

[250] 81 FR 73677–73725, October 25, 2016.

[251] See 40 CFR 1037.801.

[252] 81 FR 73602–73611, October 25, 2016.

[253] 81 FR 73571, October 25, 2016.

[254] 81 FR 73553–73571, October 25, 2016.

[255] 40 CFR 1037.701 through 1037.750.

[256] U.S. EPA Heavy-Duty Vehicle Certification Data. Last accessed on January 25, 2023 at *https://www.epa.gov/compliance-and-fuel-economy-data/annual-certification-data-vehicles-engines-and-equipment.*

[257] See 40 CFR 1037.105(h)(2) for details.

D. Vehicle Technologies

As explained in Section ES.B, EPA is both proposing to revise the MY 2027 HD vehicle CO_2 emission standards and proposing new CO_2 emission standards that phase in annually from MY 2028 through 2032 for HD vocational vehicles and tractors. We are proposing that these Phase 3 vehicle standards are appropriate and feasible, including consideration of cost of compliance and other factors, for their respective MYs and vehicle subcategories through technology improvements in several areas. To support the feasibility and appropriateness of the proposed standards, we evaluated each technology and estimated a potential technology adoption rate in each vehicle subcategory per MY (our technology packages) that EPA projects is achievable based on nationwide production volumes, considering lead time, technical feasibility, cost, and other factors. At the same time, the proposed standards are performance-based and do not mandate any specific technology for any manufacturer or any vehicle subcategory. The following subsections describe the GHG emission-reducing technologies for HD vehicles considered in the proposal, including those for HD vehicles with ICE (Section II.D.1), BEVs (Section II.D.2), and FCEVs (Section II.D.3), as well as a summary of the technology assessment that supports the feasibility of the proposed Phase 3 standards (Section II.D.4) and the primary inputs we used in our new technology assessment tool, Heavy-Duty Technology Resource Use Case Scenario (HD TRUCS), that we developed to evaluate the design features needed to meet the power and energy demands of various HD vehicles when using ZEV technologies, as well as costs related to manufacturing, purchasing and operating ICE and ZEV technologies (Section II.D.5).

We are not proposing changes to the existing Phase 2 GHG emission standards for HD engines and are not reopening those standards in this rulemaking. As noted in the following section and DRIA Chapter 1.4, there are technologies available that can reduce GHG emissions from HD engines, and we anticipate that many of them will be used to meet the MY 2024 and MY 2027 CO_2 emission standards, while development is underway to meet the new low NO_X standards for MY 2027.[258] At this time, we believe that additional GHG reductions would be best driven through more stringent vehicle-level CO_2 emission standards as we are proposing in this rulemaking, which also account for the engine's CO_2 emissions, instead of also proposing new CO_2 emission standards that apply to heavy-duty engines.

1. Technologies To Reduce GHG Emissions From HD Vehicles With ICEs

The CO_2 emissions of HD vehicles vary depending on the configuration of the vehicle. Many aspects of the vehicle impact its emissions performance, including the engine, transmission, drive axle, aerodynamics, and rolling resistance. For this proposed rule, as we did for HD Phase 1 and Phase 2, we are proposing more stringent CO_2 emissions standards for each of the regulatory subcategories based on the performance of a package of technologies that reduce CO_2 emissions. And in this rule, we developed technology packages that include both ICE vehicle and ZEV technologies.

For each regulatory subcategory, we selected a theoretical ICE vehicle with CO_2-reducing technologies to represent the average MY 2027 vehicle that meets the existing MY 2027 Phase 2 standards. These vehicles are used as baselines from which to evaluate costs and effectiveness of additional technologies and more stringent standards on a per-vehicle basis. The MY 2027 technology package for tractors include technologies such as improved aerodynamics; low rolling resistance tires; tire inflation systems; efficient engines, transmissions, and drivetrains, and accessories; and extended idle reduction for sleeper cabs, The GEM inputs for the individual technologies that make up the fleet average technology package that meets the existing MY 2027 CO_2 tractor emission standards are shown in Table II–1.[259] The comparable table for vocational vehicles is shown in Table II–2.[260] The technology package for vocational vehicles include technologies such as low rolling resistance tires; tire inflation systems; efficient engines, transmissions, and drivetrains; weight reduction; and idle reduction technologies. Note that the HD GHG Phase 2 standards are performance-based; EPA does not require this specific technology mix, rather the technologies shown in Table II–1 and II–2 are potential pathways for compliance.

[258] 40 CFR 1036.104.

[259] 81 FR 73616, October 25, 2016.

[260] 81 FR 73714, October 25, 2016.

TABLE II–1—GEM INPUTS FOR MY 2027 VEHICLES MEETING THE EXISTING MY 2027 TRACTOR CO_2 EMISSION STANDARDS

Class 7			Class 8					
Day cab			Day cab			Sleeper cab		
Low roof	Mid roof	High roof	Low roof	Mid roof	High roof	Low roof	Mid roof	High roof
Engine Fuel Map								
2027MY 11L Engine 350 HP	2027MY 11L Engine 350 HP	2027MY 11L Engine 350 HP	2027MY 15L Engine 455 HP	2027MY 15L Engine 455 HP	2027MY 15L Engine 455 HP	2027MY 15L Engine 455 HP	2027MY 15L Engine 455 HP	2027MY 15L Engine 455 HP
Aerodynamics (C_dA in m^2)								
5.12	6.21	5.67	5.12	6.21	5.67	5.08	6.21	5.26
Steer Tire Rolling Resistance (CRR in kg/metric ton)								
5.8	5.8	5.6	5.8	5.8	5.6	5.8	5.8	5.6
Drive Tire Rolling Resistance (CRR in kg/metric ton)								
6.2	6.2	5.8	6.2	6.2	5.8	6.2	6.2	5.8
Extended Idle Reduction Weighted Effectiveness								
N/A	N/A	N/A	N/A	N/A	N/A	3%	3%	3%
Transmission = 10 speed Manual Transmission Gear Ratios = 12.8, 9.25, 6.76, 4.90, 3.58, 2.61, 1.89, 1.38, 1.00, 0.73								
Drive Axle Ratio = 3.21 for day cabs, 3.16 for sleeper cabs								
6 x 2 Axle Weighted Effectiveness								
N/A	N/A	N/A	0.6%	0.6%	0.6%	0.6%	0.6%	0.6%
Transmission Type Weighted Effectiveness = 1.6%								
Neutral Idle Weighted Effectiveness								
0.2%	0.2%	0.2%	0.2%	0.2%	0.2%	0.03%	0.03%	0.03%
Direct Drive Weighted Effectiveness = 1.0%								
Transmission Efficiency Weighted Effectiveness = 0.7%								
Axle Efficiency Improvement = 1.6%								
Air Conditioner Efficiency Improvements = 0.3%								
Accessory Improvements = 0.2%								
Predictive Cruise Control = 0.8%								
Automatic Tire Inflation Systems = 0.4%								
Tire Pressure Monitoring System = 0.7%								

TABLE II–2—GEM INPUTS FOR MY 2027 VEHICLES MEETING THE EXISTING MY 2027 VOCATIONAL VEHICLE CO_2 EMISSION STANDARDS

LHD (Class 2b–5)			MHD (Class 6–7)			HHD (Class 8)		
Urban	Multi-purpose	Regional	Urban	Multi-purpose	Regional	Urban	Multi-purpose	Regional
SI Engine Fuel Map								
2018 MY 6.8L, 300 hp engine								
CI Engine Fuel Map								
2027 MY 7L, 200 hp Engine			2027 MY 7L, 270 hp Engine			2027 MY 11L, 350 hp Engine	2027 MY 11L, 350 hp Engine and 2027 MY 15L 455hp Engine	
Torque Converter Lockup in 1st Gear (adoption rate)								
50%	50%	50%	50%	50%	50%	30%	30%	0%
6×2 Disconnect Axle (adoption rate)								
0%	0%	0%	0%	0%	0%	0%	25%	30%

TABLE II–2—GEM INPUTS FOR MY 2027 VEHICLES MEETING THE EXISTING MY 2027 VOCATIONAL VEHICLE CO_2 EMISSION STANDARDS—CONTINUED

LHD (Class 2b–5)			MHD (Class 6–7)			HHD (Class 8)		
Urban	Multi-purpose	Regional	Urban	Multi-purpose	Regional	Urban	Multi-purpose	Regional
Automatic Engine Shutdown (adoption rate)								
70%	70%	90%	70%	70%	90%	70%	70%	90%
Stop-Start (adoption rate)								
30%	30%	0%	30%	30%	0%	20%	20%	0%
Neutral Idle (adoption rate)								
60%	60%	0%	60%	60%	0%	70%	70%	0%
Steer Tire Rolling Resistance (CRR kg/metric ton)								
6.8	6.2	6.2	6.7	6.2	6.2	6.2	6.2	6.2
Drive Tire Rolling Resistance (CRR kg/metric ton)								
6.9	6.9	6.9	7.5	6.9	6.9	7.5	6.9	6.9
Weight Reduction (lb)								
75	75	75	75	75	75	125	125	125

Technologies exist today and continue to evolve to improve the efficiency of the engine, transmission, drivetrain, aerodynamics, and tire rolling resistance in HD vehicles and therefore reduce their CO_2 emissions. As discussed in the preamble to the HD GHG Phase 2 program and shown in Table II–1 and Table II–2, there are a variety of such technologies. In developing the Phase 2 CO_2 emission standards, we developed technology packages that were premised on technology adoption rates of less than 100 percent. There may be an opportunity for further improvements and increased adoption through MY 2032 for many of these technologies included in the HD GHG Phase 2 technology package used to set the existing MY 2027 standards. For example, DRIA Chapter 1.4 provides an update to tractor aerodynamic designs developed by several of the manufacturers as part of the DOE SuperTruck program that demonstrate aerodynamics that are better than those used in the existing MY 2027 standards' HD GHG Phase 2 technology package for high roof sleeper cab tractors in MYs beyond 2027.

The heavy-duty industry has also been developing hybrid powertrains, as described in DRIA Chapter 1.4.1.1. Hybrid powertrains consist of an ICE as well as an electric drivetrain and some designs also incorporate plug-in capability. Hybrid powered vehicles may provide CO_2 emission reductions through the use of downsized engines, recover energy through regenerative braking system that is normally lost while braking, and provide additional engine-off operation during idling and coasting. Hybrid powertrains are available today in a number of heavy-duty vocational vehicles including passenger van/shuttle bus, transit bus, street sweeper, refuse hauler, and delivery truck applications. Heavy-duty hybrid vehicles may include a power takeoff (PTO) system that is used to operate auxiliary equipment, such as the boom/bucket on a utility truck or the water pump on a fire truck.

Furthermore, manufacturers may develop new ICE vehicle technologies through the MY 2032 timeframe. An example of a new technology under development that would reduce GHG emissions from HD vehicles with ICEs is hydrogen-fueled internal combustion engines (H2–ICE). These engines are currently in the prototype stage of innovation [261] for HD vehicles, but have also been demonstrated as technically feasible in the past in the LD fleet. H2–ICE is a technology that produces zero hydrocarbon (HC), carbon monoxide (CO), and CO_2 engine-out emissions.

H2–ICE are similar to existing internal combustion engines and could leverage the technical expertise manufacturers have developed with existing products. H2–ICEs use many of the same components as existing internal combustion engines for many key systems. Similarly, H2–ICE vehicles could be built on the same assembly lines as existing ICE vehicles, by the same workers and with many of the same suppliers.

Though many engine components would be similar between H2–ICE and, for example, a comparable existing diesel-fueled ICE, components such as the cylinder head, piston and piston rings would be unique to H2–ICE as well as intake and exhaust valves and seats to control H2 leakage during combustion. Fuel systems would require changes to fuel injectors and the fuel delivery system. The H2–ICE aftertreatment systems may be simpler than today's comparable diesel-fueled ICEs. They likely would not require the use of a diesel oxidation catalyst (DOC) or a diesel particulate filter (DPF) system. NO_X emissions are still present in the H2–ICE exhaust and therefore a selective catalyst reduction (SCR) system would likely still be required, though smaller in size than an existing comparable diesel-fueled ICE aftertreatment system. The use of lean air-fuel ratios, not exhaust gas recirculation (EGR), would be the most effective way to control NO_X in H2 combustion engines. EGR is less effective with H2 due to the absence of CO_2 in the exhaust gas. Additional information regarding H2–ICE can be found in the DRIA Chapter 1.4.2.

One key significant difference between an existing comparable diesel-fueled ICE and a H2–ICE is the fuel storage tanks. The hydrogen storage tanks that would replace existing ICE fuel tanks are significantly more expensive. The fuel tanks used by H2–ICE would be the same as those used by

[261] Comment submitted by DTNA to EPA Docket, EPA–HQ–OAR–2017–0055–1168. See *Control of Air Pollution from New Motor Vehicles: Heavy-Duty Engine and Vehicle Standards Response to Comments,* EPA–420–R–22–036 December 2022.

a FCEV and may be either compressed storage (350 or 700 Bar) or cryogenic (storage temperatures reaching −253 degrees Celsius). Please refer to Section II.D.3 for the discussion regarding H2 fuel storage tanks. Furthermore, like FCEVs, H2 refueling infrastructure would be required for H2–ICE vehicles.

We request comment on whether we should include additional GHG-reducing technologies and/or higher levels of adoption rates of existing technologies for ICE vehicles in our technology assessment for the final rule.

2. HD Battery Electric Vehicle Technology

The HD BEV market has been growing significantly since MY 2018. DRIA Chapter 1.5 includes BEV vehicle information on over 170 models produced by over 60 manufacturers that cover a broad range of applications, including school buses, transit buses, straight trucks, refuse haulers, vans, tractors, utility trucks, and others, available to the public through MY 2024.

The battery electric propulsion system includes a battery pack that provides the energy to the motor that moves the vehicle. In this section, and in DRIA Chapter 1.5.1 and 2.4, we discuss battery technology that can be found in both BEVs and FCEVs. We request comment on our assessment of heavy-duty battery designs, critical materials, and battery manufacturing.

i. Batteries Design Parameters

Battery design involves considerations related to cost [262] and performance including specific energy [263] and power, energy density,[264] temperature impact, durability, and safety. These parameters typically vary based on the cathode and anode materials, and the conductive electrolyte medium at the cell level. Different battery chemistries have different intrinsic values. Here we provide a brief overview of the different energy and power parameters of batteries and battery chemistries.

a. Battery Energy and Power Parameters

Specific energy and power and energy density are a function of how much energy or power can be stored per unit mass (in Watt-hour per kilogram (Wh/kg) or watt per kilogram (W/kg)) or volume (in Watt-hour per liter (Wh/L)). Therefore, for a given battery weight or mass, the energy (in kilowatt-hour or kWh) can be calculated. For example, a battery with high specific energy and a lower weight may yield the same amount of energy as a chemistry with a lower specific energy and more weight.

Battery packs have a ''nested'' design where a group of cells are combined to make a battery module and a group of modules are combined to make a battery pack. Therefore, the battery systems can be described on the pack, module, and cell levels. Design choices about the different energy and power capacities to prioritize in a battery can depend on its battery chemistry. Common battery chemistries today include nickel-manganese-cobalt (NMC), nickel-cobalt-aluminum (NCA), and iron-phosphate (LFP) based-chemistries. Nickel-based chemistries typically have higher gravimetric and volumetric energy densities than iron phosphate-based chemistries. Since energy or power is only housed at the chemistry level, any additional mass such as the cell, module, and pack casings will only add to the weight of the battery without increasing the energy of the overall system. Therefore, some pack producers have eliminated the module in favor of a ''cell-to-pack'' design in recent years.[265]

External factors, especially temperature, can have a strong influence on the performance of the battery. Heavy-duty BEVs today include thermal management systems to keep the battery operating within a desired temperature range, which is commonly referred to as conditioning of the battery. Therefore, while operating a vehicle in cold temperatures, some of the battery energy is used to heat both the battery packs and the vehicle interior.[266] Cold temperatures, in particular, can result in reduced mobility of the lithium ions in the liquid electrolyte inside the battery; for the driver, this may mean lower range. Battery thermal management is also used during hot ambient temperatures to keep the battery from overheating. We consider and account for the energy required for battery thermal management in our analysis, as discussed in Section II.D.5.ii.b.

b. Battery Durability

Another important battery design consideration is the durability of the battery. Durability is frequently associated with cycle life, where cycle life is the number of times a battery can fully charge and discharge before the battery is no longer used for its original purpose. In 2015 the United Nations Economic Commission for Europe (UN ECE) began studying the need for a Global Technical Regulation (GTR) governing battery durability in light-duty vehicles. In 2021 it finalized United Nations Global Technical Regulation No. 22, ''In-Vehicle Battery Durability for Electrified Vehicles,'' [267] or GTR No. 22, which provides a regulatory structure for contracting parties to set standards for battery durability in light-duty BEVs and PHEVs. Likewise, although not finalized, the UN ECE GTR working group began drafting language for HD BEVs and hybrid electric vehicles. Loss of electric range could lead to a loss of utility, meaning electric vehicles could be driven less and therefore displace less distance travelled than might otherwise be driven in conventional vehicles. Furthermore, a loss in utility could also dampen purchaser sentiment.

For batteries that are used in HD BEVs, the state-of-health (SOH) is an important design factor. The environmental performance of electrified vehicles may be affected by excess degradation of the battery system over time. However, the durability of a battery is not limited to the cycling of a battery, there are many phenomena that can impact the duration of usability of a battery. As a battery goes through charge and discharge cycles, the SOH of the battery decreases. Capacity fade, increase in internal resistance, and voltage loss, for example, are other common metrics to measure the SOH of a battery. These parameters together help better understand and define the longevity or durability of the battery. The SOH and, in turn, the cycle life of the battery is determined by both the chemistry of the battery as well as external factors including temperature. The rate at which the battery is discharged as well as the rate at which it is charged will also impact the SOH

[262] Cost, here, is associated with cost of the battery design produced at scale instead of decrease in cost of batteries from high volume production. This cost may be associated with using more expensive minerals (*e.g.* nickel and cobalt instead of iron phosphate). Alternatively, some battery cell components may be more expensive for the same chemistry. For example, power battery cells are more expensive to manufacture than energy battery cells because these cells require thinner electrodes which are more complex to produce.

[263] Battery specific energy (also referred to as gravimetric energy density) is a measure of battery energy per unit of mass.

[264] Gravimetric energy density (specific energy) is a measure of battery energy per unit of mass. Volumetric energy density (also called energy density) is a measure of battery energy per unit of volume.

[265] BYD ''blade'' cells are an example of cell-to-pack technology.

[266] *https://www.aaa.com/AAA/common/AAR/files/AAA-Electric-Vehicle-Range-Testing-Report.pdf.*

[267] United Nations Economic Commission for Europe, Addendum 22: United Nations Global Technical Regulation No. 22, United Nations Global Technical Regulation on In-vehicle Battery Durability for Electrified Vehicles, April 14, 2022. Available at: *https://unece.org/sites/default/files/2022-04/ECE_TRANS_180a22e.pdf.*

of the battery. Lastly, calendar aging, or degradation of the battery while not in use, can also contribute to the deterioration of the battery.

There are a number of ways to improve and prolong the battery life in a vehicle. We took considerations on maintaining the battery temperature while driving by applying additional energy required for conditioning the battery. Furthermore, battery size is increased by 20 percent to accommodate additional energy that may be required resulting from loss of capacity over time.

c. HD BEV Safety Assessment

HD BEV systems must be designed to always maintain safe operation. As with any onroad vehicle, BEVs must be robust while operating in temperature extremes as well as rain and snow. The BEV systems must be designed for reasonable levels of immersion, including immersion in salt water or brackish water. BEV systems must also be designed to be crashworthy and limit damage that compromises safety. If the structure is compromised by a severe impact, the systems must provide first responders with a way to safely conduct their work at an accident scene. The HD BEV systems must be designed to ensure the safety of users, occupants, and the general public in their vicinity.

In DRIA Chapter 1.5.4, we discuss the industry codes and standards used by manufacturers that guide safe design and development of heavy-duty BEVs, including those for developing battery systems and charging systems that protect people and the equipment. These standards have already been developed by the industry and are in place for manufacturers to use today to develop current and future products. The standards guide the design of BEV batteries to allow them to safely accept and deliver power for the life of the vehicle. The standards provide guidance to design batteries that also handle vibration, temperature extremes, temperature cycling, water, and mechanical impact from items such as road debris. For HD BEVs to uphold battery/electrical safety during and after a crash, they are designed to maintain high voltage isolation, prevent leakage of electrolyte and volatile gases, maintain internal battery integrity, and withstand external fire that could come from the BEV or other vehicle(s) involved in a crash. NHTSA continues work on battery safety requirements and extend the applicability of FMVSS No. 305 to HD vehicles and would align with the existing Global Technical Regulation (GTR) No. 20 to include safety requirements during normal operation, charging, and post-crash. We request comment on our assessment that HD BEVs can be designed to maintain safety.

ii. Assessment of Battery Materials and Production

Although the market share of light-duty and heavy-duty ZEVs in the United States is already growing, EPA recognizes that the proposed standards may accelerate this trend. Assessing the feasibility of incremental penetrations of ZEVs that may result from the proposed standards includes consideration of the readiness of the supply chain to provide the required quantities of critical minerals, components, and battery manufacturing capacity. This section provides a general review of how we considered supply chain and manufacturing in this analysis, the sources we considered, and how we used this information in the analysis. It also provides a high-level discussion of the security implications of increased demand for minerals and other commodities used to manufacture ZEVs.

In developing these standards, we considered the ability for global and domestic manufacturing and critical mineral capacity to respond to the projected demand for ZEVs that manufacturers may choose to produce to comply with the proposed standards. As described in this section, we consulted with industry and government agency sources (including DOE, U.S. Geological Survey (USGS), and several analysis firms) to collect information on production capacity, price forecasts, global mineral markets, and related topics, and have considered this information to inform our assumptions about future manufacturing capabilities and costs. We have included consideration of the influence of critical minerals and materials availability as well as vehicle and battery manufacturing capacities on the production of ZEVs.

We believe that the proposed rate of stringency is appropriate in light of this assessment. It is also our assessment that increased vehicle electrification in the United States will not lead to a critical long term dependence on foreign imports of minerals or components, nor that increased demand for these products will become a vulnerability to national security. First, in many cases the reason that these products are often sourced from outside of the United States is not because the products cannot be produced in the U.S., but because other countries have already invested in developing a supply chain for their production. Moreover, the United States will likely develop a domestic supply chain for these products because U.S. manufacturers will need to remain competitive in a global market where electrification is already proceeding rapidly. Second, many vehicle manufacturers, suppliers, startups, and related industries have already recognized the need for increased domestic production capacity as a business opportunity, and are basing business models on building out various aspects of the supply chain. Third, Congress and the Administration have taken significant steps to accelerate this activity by funding, facilitating, and otherwise promoting the rapid growth of U.S. supply chains for these products through the Inflation Reduction Act, the Bipartisan Infrastructure Law, and numerous Executive Branch initiatives. EPA has confidence that these efforts are effectively addressing supply chain concerns. Finally, utilization of critical minerals is different from the utilization of foreign oil, in that oil is consumed as a fuel while minerals become a constituent of manufactured vehicles. Minerals that are imported for vehicle production remain in the vehicle, and can be reclaimed through recycling. Each of these points will be expanded in more detail in the sections below.

We request comment on our assessment and data to support our assessment of battery critical raw materials and battery production for the final rule.

a. Battery Critical Raw Materials

Critical minerals are generally considered to include a large diversity of products, ranging from relatively plentiful materials that are constrained primarily by production capacity and refining, such as aluminum, to those that are both relatively rare and costly to process, such as the rare-earth metals that are used in magnets for permanent-magnet synchronous motors (PMSMs) that are used as the electric motors to power heavy-duty ZEVs and some semiconductor products. Extraction, processing, and recycling of certain critical minerals (such as lithium, cobalt, nickel, magnesium, graphite and rare earth metals) are also an important part of the supply chain supporting the production of battery components.

These minerals are also experiencing increasing demand across many other sectors of the global economy, not just the transportation industry, as the world seeks to reduce carbon emissions. As with any emerging technology, a transition period must take place in which a robust supply chain develops to support production of these products. At the present time, they are commonly sourced from global suppliers and do

not yet benefit from a fully developed domestic supply chain.[268] As demand for these materials increases due to increasing production of ZEVs, current mining and processing capacity will expand.

The U.S. Geological Survey lists 50 minerals as ''critical to the U.S. economy and national security.'' [269] [270] The Energy Act of 2020 defines a ''critical mineral'' as a non-fuel mineral or mineral material essential to the economic or national security of the United States and which has a supply chain vulnerable to disruption.[271] Critical minerals are not necessarily short in supply, but are seen as essential to the manufacture of products that are important to the economy or national security. The risk to their availability may stem from geological scarcity, geopolitics, trade policy, or similar factors.[272]

Emission control catalysts for ICE vehicles utilize critical minerals including cerium, palladium, platinum, and rhodium. These are also required for hybrid vehicles due to the presence of the ICE. Critical minerals most relevant to lithium-ion battery production include cobalt, graphite, lithium, manganese, and nickel, which are important constituents of electrode active materials, their presence and relative amounts depending on the chemistry formulation. Aluminum is also used for cathode foils and in some cell chemistries. Rare-earth metals are used in permanent-magnet electric machines, and include several elements such as dysprosium, neodymium, and samarium.

Some of the electrification technologies that use critical minerals have alternatives that use other minerals or eliminate them entirely. For these, vehicle manufacturers in some cases have some flexibility to modify their designs to reduce or avoid use of minerals that are difficult or expensive to procure. For example, in some ZEV battery applications it is feasible and increasingly common to employ an iron phosphate cathode which has lower energy density but does not require cobalt, nickel, or manganese. Similarly, rare earths used in permanent-magnet electric machines have potential alternatives in the form of ferrite or other advanced magnets, or the use of induction machines or advanced externally excited motors, which do not use permanent magnets.

This discussion therefore focuses on minerals that are most critical for battery production, including nickel, cobalt, graphite, and lithium.

Availability of critical minerals for use in battery production depends on two primary considerations: production of raw minerals from mining (or recycling) operations and refining operations that produce purified and processed substances (precursors, electrolyte solutions, and finished electrode powders) made from the raw minerals, that can then be made into battery cells.

As shown in Figure II–1, in 2019 about 50 percent of global nickel production occurred in Indonesia, Philippines, and Russia, with the rest distributed around the world. Nearly 70 percent of cobalt originated from the Democratic Republic of Congo, with some significant production in Russia and Australia, and about 20 percent in the rest of the world. More than 60 percent of graphite production occurred in China, with significant contribution from Mozambique and Brazil for another 20 percent. About half of lithium was mined in Australia, with Chile accounting for another 20 percent and China about 10 percent.

BILLING CODE 6560–50–P

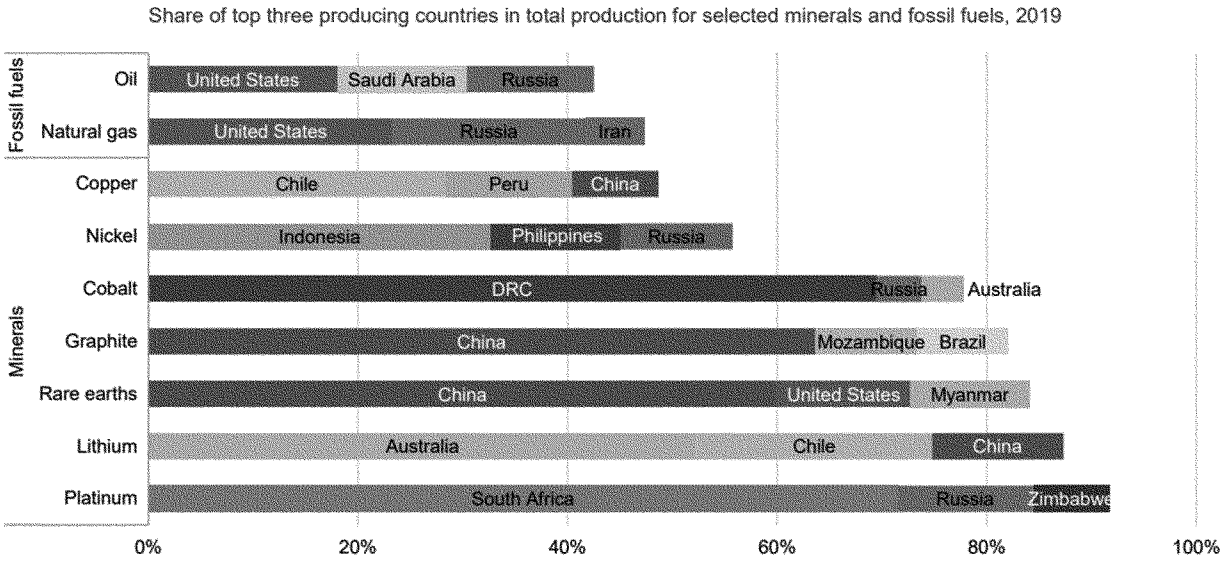

Figure II-1 Share of top three producing countries for critical minerals and fossil fuels in 2019 (IEA). [272]

[268] As mentioned in Preamble I.C.2.i and in DRIA 1.3.2.2, there are tax credit incentives in the IRA for the production and sale of battery cells and modules of up to $45 per kWh, which includes up to 10 percent of the cost of producing applicable critical materials that meet certain specifications when such components or minerals are produced in the United States.

[269] U.S. Geological Survey, ''U.S. Geological Survey Releases 2022 List of Critical Minerals,'' February 22, 2022. Available at: *https://www.usgs.gov/news/national-news-release/us-geological-survey-releases-2022-list-critical-minerals*.

[270] The full list includes: Aluminum, antimony, arsenic, barite, beryllium, bismuth, cerium, cesium, chromium, cobalt, dysprosium, erbium, europium, fluorspar, gadolinium, gallium, germanium, graphite, hafnium, holmium, indium, iridium, lanthanum, lithium, lutetium, magnesium, manganese, neodymium, nickel, niobium, palladium, platinum, praseodymium, rhodium, rubidium, ruthenium, samarium, scandium, tantalum, tellurium, terbium, thulium, tin, titanium, tungsten, vanadium, ytterbium, yttrium, zinc, and zirconium.

[271] See 2021 Draft List of Critical Minerals (86 FR 62199–62203).

[272] International Energy Agency, ''The Role of Critical Minerals in Clean Energy Transitions,'' World Energy Outlook Special Report, Revised version. March 2022.

According to the 100-day review under E.O. on America's Supply Chains (E.O. 14017), of the major actors in mineral refining, 60 percent of lithium refining occurred in China, with 30 percent in Chile and 10 percent in Argentina. 72 percent of cobalt refining occurred in China, with another 17 percent distributed among Finland, Canada, and Norway. 21 percent of Class 1 nickel refining occurred in Russia, with 16 percent in China, 15 percent in Japan and 13 percent in Canada.[273] Similar conclusions were reached in an analysis by the International Energy Agency, shown in Figure II–2.

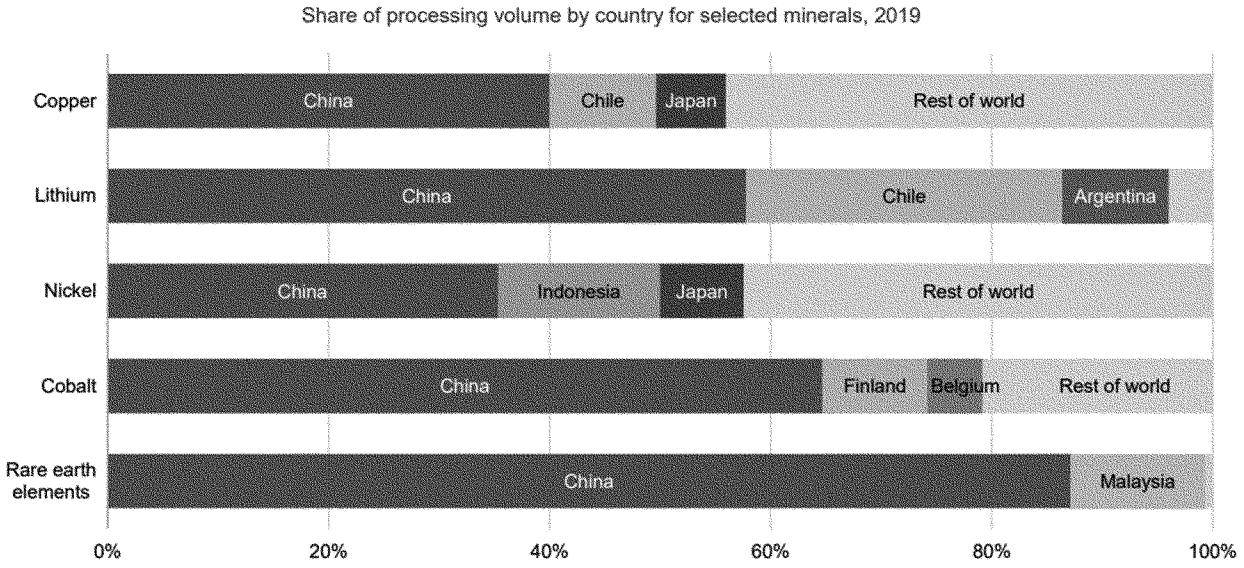

Figure II-2 IEA accounting of share of refining volume of critical minerals by country (IEA).[272]

Currently, the United States is lagging behind much of the rest of the world in critical mineral production. Although the United States has nickel reserves, and opportunity also exists to recover significant nickel from mine waste remediation and similar activities, it is more convenient for U.S. nickel to be imported from other countries, with 68 percent coming from Canada, Norway, Australia, and Finland, countries with which the United States has good trade relations.[274] According to the USGS, ample reserves of nickel exist in the United States and globally, potentially constrained only by processing capacity.[275] The United States has numerous cobalt deposits but few are developed while some have produced cobalt only in the past; about 72 percent of U.S. consumption is imported.[276] Similar observations may be made about graphite and lithium. Significant lithium deposits do exist in the United States in Nevada and California as well as several other locations,[277] [278] and are currently the target of development by suppliers and vehicle manufacturers. U.S. deposits of natural graphite deposits also exist but graphite has not been produced in the United States since the 1950s and significant known resources are largely undeveloped.[279]

Although predicting mineral supply and demand into the future is challenging, it is possible to identify general trends likely to occur in the future. As seen in Figure II–3 and Figure II–4, preliminary projections prepared by Li-Bridge for DOE,[280] and presented to the Federal Consortium for Advanced Batteries (FCAB) [281] in November 2022, indicate that global supplies of cathode active material (CAM) used as a part of the cathode manufacturing process and lithium chemical product are expected to be sufficient through 2035.

[273] The White House, ''Building Resilient Supply Chains, Revitalizing American Manufacturing, and Fostering Broad-Based Growth,'' 100-Day Reviews under Executive Order 14017, June 2021.

[274] The White House, ''Building Resilient Supply Chains, Revitalizing American Manufacturing, and Fostering Broad-Based Growth,'' 100-Day Reviews under Executive Order 14017, June 2021.

[275] The White House, ''Building Resilient Supply Chains, Revitalizing American Manufacturing, and Fostering Broad-Based Growth,'' 100-Day Reviews under Executive Order 14017, June 2021.

[276] U.S. Geological Survey, ''Cobalt Deposits in the United States,'' June 1, 2020. Available at *https://www.usgs.gov/data/cobalt-deposits-united-states.*

[277] U.S. Geological Survey, ''Mineral Commodity Summaries 2022—Lithium'', January 2022. Available at *https://pubs.usgs.gov/periodicals/mcs2022/mcs2022-lithium.pdf.*

[278] U.S. Geological Survey, ''Lithium Deposits in the United States,'' June 1, 2020. Available at *https://www.usgs.gov/data/lithium-deposits-united-states.*

[279] U.S. Geological Survey, ''USGS Updates Mineral Database with Graphite Deposits in the United States,'' February 28, 2022.

[280] Slides 6 and 7 of presentation by Li-Bridge to Federal Consortium for Advanced Batteries (FCAB), November 17, 2022.

[281] U.S. Department of Energy, Vehicle Technologies Office. ''Federal Consortium for Advanced Batteries (FCAB)''. Available online: *https://www.energy.gov/eere/vehicles/federal-consortium-advanced-batteries-fcab.*

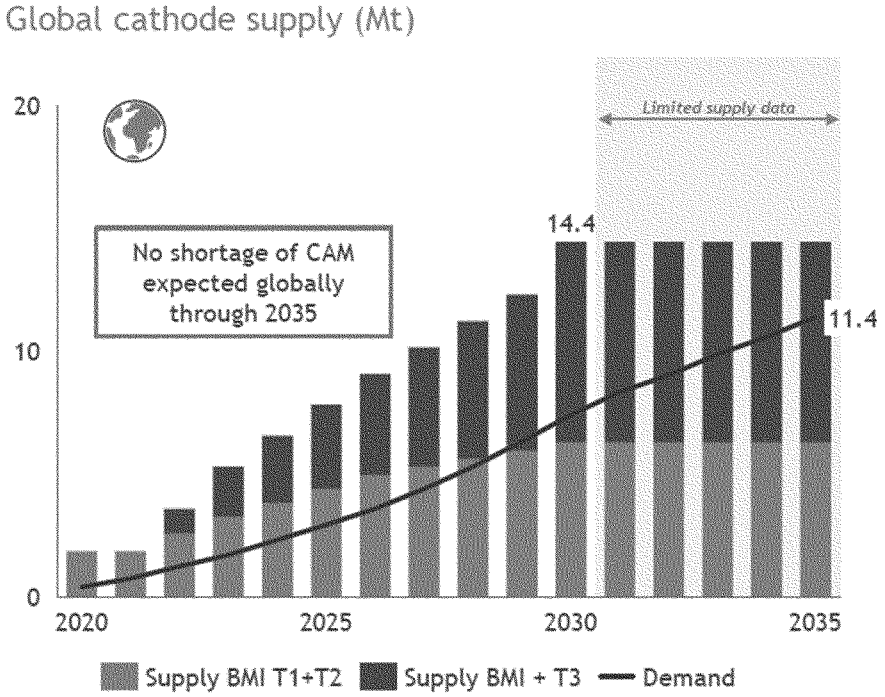

Figure II-3 DOE Li-Bridge assessment of global CAM supply and demand.

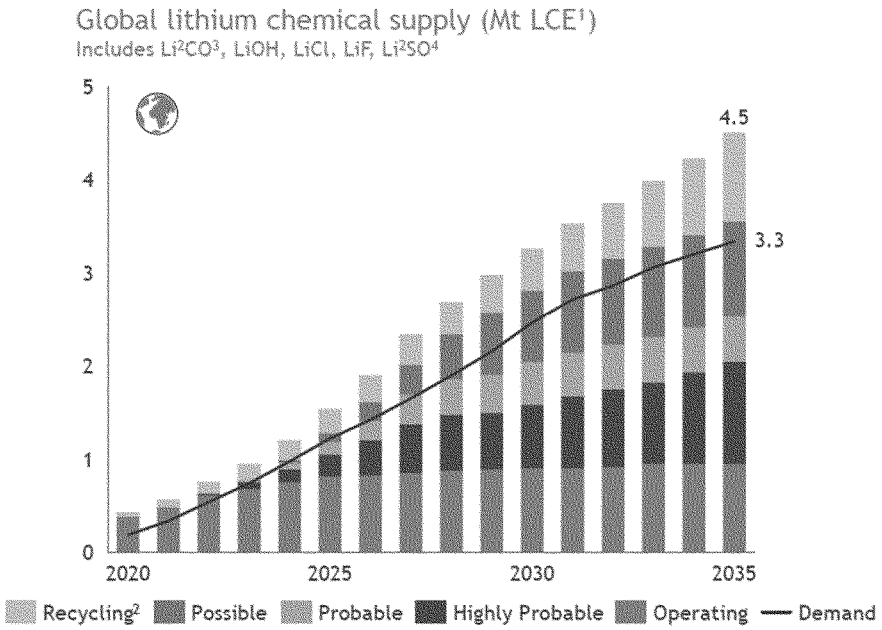

Figure II-4 DOE Li-Bridge assessment of global lithium chemical supply and demand

BILLING CODE 6560–50–C

The most recent information indicates that the market is responding robustly to demand[282] and lithium supplies are expanding as new resources are characterized, projects continue through engineering economic assessments, and others begin permitting or construction. For example, in October 2022, the IEA projected that global Lithium Carbonate Equivalent (LCE) production from operating mines and those under construction may sufficiently meet primary demand until 2028 under the Stated Policies Scenario.[283] In December 2022, BNEF projected lithium mine production can meet end-use demand

[282] Bloomberg New Energy Finance, ''Lithium-ion Battery Pack Prices Rise for First Time to an Average of $151/kWh,'' December 6, 2022. Accessed on December 6, 2022 at: *https://about.bnef.com/blog/lithium-ion-battery-pack-prices-rise-for-first-time-to-an-average-of-151-kwh/*.

[283] International Energy Agency, ''Committed mine production and primary demand for lithium, 2020–2030,'' October 26, 2022. Accessed on March 9, 2023 at *https://www.iea.org/data-and-statistics/charts/committed-mine-production-and-primary-demand-for-lithium-2020-2030*.

until 2028.[284] [285] Notably, the BNEF data is not exhaustive and includes only three U.S. projects: Silver Peak (phase I and II), Rhyolite Ridge (phase I), and Carolina Lithium (phase I). Additionally, in March 2023 DOE communicated to EPA that DOE and ANL have identified 21 additional lithium production projects in the United States in addition to the three identified in the December 2022 BNEF data. Were they to achieve commercial operations, the 24 U.S. projects would produce an additional 1,000 kilotons per year LCE not accounted for in the December BNEF analysis,[286] and suggests that lithium supplies would meet the BNEF Net-Zero demand projection.

In addition, the European Union is seeking to promote rapid development of Europe's battery supply chains by considering targeted measures such as accelerating permitting processes and encouraging private investment. To these ends the European Parliament proposed a Critical Raw Materials Act on March 16, 2023, which includes these and other measures to encourage the development of new supplies of critical minerals not currently anticipated in market projections.[287] [288] [289] In DRIA 1.5.1.3 we detail these and many other examples that demonstrate how momentum has picked up in the lithium market since IEA's May 2022 report. For more discussion, please see DRIA 1.5.1.3.

Despite recent short-term fluctuations in price, the price of lithium is expected to stabilize at or near its historical levels by the mid- to late-2020s.[290] [291] This perspective is also supported by proprietary battery price forecasts by Wood Mackenzie that include the predicted effect of temporarily elevated mineral prices.[292] This is consistent with the BNEF battery price outlook 2022 which expects battery prices to start dropping again in 2024, and BNEF's 2022 Battery Price Survey which predicts that average pack prices should fall below $100/kWh by 2026.[293] Taken together these outlooks support the perspective that lithium is not likely to encounter a critical shortage as supply responds to meet growing demand.

As described in the following section, the development of mining and processing capacity in the United States is a primary focus of efforts on the part of both industry and the Administration toward building a robust domestic supply chain for electrified vehicle production, and will be greatly facilitated by the provisions of the BIL and the IRA as well as large private business investments that are already underway and continuing.

b. Battery Market and Manufacturing Capacity

Battery systems can be described on the pack, module, and cell levels. A pack typically consists of a group of modules, a module consists of a group of cells, and cells consist of the half-cell electrodes. Cells can be directly supplied to the manufacturer to be assembled into modules and packs; alternatively, cell producers may assemble cells into modules before sending the modules to another supplier to be assembled into a pack, before then sending it to the OEM for final assembly. While there are hundreds of reported automotive battery cell producers, major LD automakers use batteries produced by a handful of battery cell manufacturers. These suppliers include LG Chem, Samsung SDI, SK Innovation, Panasonic/Tesla, Contemporary Amperex Technology Co., Limited (CATL) and BYD. A 2021 report developed by DOE's Argonne National Lab (ANL) found significant growth in the annual battery supply between 2010 and 2020.[294]

In both the LD and HD industry sectors, there is a meaningful distinction between 1) battery cell suppliers, and 2) battery pack assemblers who refer to themselves as battery producers while using cells produced by a different cell supplier, in understanding how impacts from the increased production volumes of cells and costs of cells in both industries flow to these different types of suppliers. The cost of cells occupies a significant percent of the final pack cost, and cell costs are inversely proportional to cell production volume.[295] [296] In other words, increased cell production volume lowers the cost of battery cells, which in turn lowers the overall pack cost. Thus, though the LD sector demand for automotive batteries is significantly outpacing the demand for vehicle batteries in the HD sector, the battery cell industry for both sectors will likely be significantly influenced by the demand in the LD industry.

Although most global battery manufacturing capacity is currently located outside the U.S., most of the batteries and cells present today in the domestic EV fleet were manufactured in the United States [297] We expect domestic manufacturing of batteries and cells to increase considerably over the coming decade. According to the Department of Energy, at least 13 new battery plants are expected to become operational in the United States within the next four years.[298] Among these 13 new battery plants include the following activities by battery suppliers and vehicle manufacturers. In partnership with SK Innovation, Ford is building three large new battery plants in Kentucky and Tennessee.[299] General

[284] Sui, Lang. Memorandum to docket EPA–HQ–OAR–2022–0985. Based on subscription data available to BNEF subscribers at *https://www.bnef.com/interactive-datasets/2d5d59acd9000031?tab=Dashboard Demand&view=8472b6c7-e8cc-467f-b4a4-fe85468fba3a.*

[285] Sui, Lang. Memorandum to docket EPA–HQ–OAR–2022–0985. Based on subscription data available to BNEF subscribers at *https://www.bnef.com/interactive-datasets/2d5d7ea4a2000001.*

[286] Sui, Lang. Memorandum to docket EPA–HQ–OAR–2022–0985. Department of Energy, communication to EPA titled ''Lithium Supplies—additional datapoints and research,'' March 8, 2023.

[287] European Union, ''7th High-Level Meeting of the European Battery Alliance: main takeaways by the Chair Maroš Šefčovič and the Council Presidency,'' March 1, 2023. Accessed on March 9, 2023 at *https://single-market-economy.ec.europa.eu/system/files/2023-03/Main%20takeaways_7th%20High-Level%20Meeting%20of%20EBA.pdf.*

[288] New York Times, ''U.S. Eyes Trade Deals With Allies to Ease Clash Over Electric Car Subsidies,'' February 24, 2023.

[289] European Parliament, ''Proposal for a regulation of the European Parliament and of the Council establishing a framework for ensuring a secure and sustainable supply of critical raw materials,'' March 16, 2023. *https://single-market-economy.ec.europa.eu/publications/european-critical-raw-materials-act_en.*

[290] Sun et al., ''Surging lithium price will not impede the electric vehicle boom,'' Joule, doi:10.1016/j.joule. 2022.06.028 (*https://dx.doi.org/10.1016/j.joule.2022.06.028*).

[291] Green Car Congress, ''Tsinghua researchers conclude surging lithium price will not impede EV boom,'' July 29, 2022.

[292] Sui, Lang. Memorandum to docket EPA–HQ–OAR–2022–0985. Wood Mackenzie, ''Battery & raw materials—Investment horizon outlook to 2032,'' accompanying data set, September 2022 (filename: brms-data-q3–2022.xlsx).

[293] Bloomberg New Energy Finance, ''Lithium-ion Battery Pack Prices Rise for First Time to an Average of $151/kWh,'' December 6, 2022. Accessed on December 6, 2022 at: *https://about.bnef.com/blog/lithium-ion-battery-pack-prices-rise-for-first-time-to-an-average-of-151-kwh/.*

[294] Argonne National Laboratory. ''Lithium-Ion Battery Supply Chain for E-Drive Vehicles in the United States: 2010–2020.'' 2021.

[295] Argonne National Laboratory. ''BatPaC Model Software''. Available online: *https://www.anl.gov/cse/batpac-model-software.*

[296] BloombergNEF. ''Battery Pack Prices Fall to an Average of $132/kWh, But Rising Commodity Prices Start to Bite''. November 30, 2021. Available online: *https://about.bnef.com/blog/battery-pack-prices-fall-to-an-average-of-132-kwh-but-rising-commodity-prices-start-to-bite.*

[297] Argonne National Laboratory, ''Lithium-Ion Battery Supply Chain for E-Drive Vehicles in the United States: 2010–2020,'' ANL/ESD–21/3, March 2021.

[298] Department of Energy, Fact of the Week #1217, ''Thirteen New Electric Vehicle Battery Plants Are Planned in the U.S. Within the Next Five Years,'' December 20, 2021.

[299] Dunn, Jason. ''Ford to build battery and assembly plants in Kentucky and Tennessee for

Motors is partnering with LG Energy Solutions to build another three battery cell manufacturing plants in Tennessee, Michigan, and Ohio, and there are discussions about another plant in Indiana.[300] LG Chem has also announced plans for a cathode material production facility in Tennessee, said to be sufficient to supply 1.2 million high-performance electric vehicles per year by 2027.[301] CATL is considering construction of plants in Arizona, Kentucky, and South Carolina.[302] In addition, CATL is partnering with Daimler Truck to expand their global partnership to producm ion batteries for their all electric long haul heavy duty trucks starting 2024 to 2030.[303] Panasonic, already partnering with Tesla for its factories in Texas and Nevada, is planning two new factories in Oklahoma and Kansas.[304] Furthermore, Tesla is also planning a $3.6 billion expansion to their Nevada Gigafactory to mass produce all electric semi trucks.[305] Toyota plans to be operational with a plant in Greensboro, North Carolina in 2025, and Volkswagen in Chattanooga, Tennessee at about the same time.[306] [307] According to S&P Global, announcements such as these could result in a U.S. manufacturing capacity of 382 GWh by 2025,[308] and 580 GWh by 2027,[309] up from roughly 60 GWh [310] [311] today. More recently, the Department of Energy estimates that recent plant announcements for North America to date could enable an estimated 838 GWh of capacity by 2025, 896 GWh by 2027, and 998 GWh by 2030, the vast majority of which is cell manufacturing capacity.[312]

The expected HD battery capacity demand based on this proposed rule would be 17 GWh in MY 2027 and grow to 36 GWh by MY 2032 (as described in DRIA 2.8.3.1), which is well below the expected manufacturing capacity for this time frame. It should be noted that the projected U.S. HD battery demand would be only a fraction of total U.S. battery demand. In comparison, we project in the Light- and Medium-Duty Multipollutant Emissions Standards Proposed Rule that the annual battery production required for the light-duty fleet would be slightly less than 900 GWh in MY 2030, and stabilize at around 1,000 GWh per year for MY 2031 and beyond.[313] Therefore, between the two proposed highway motor vehicle rules, the U.S. market could require 940 GWh of battery capacity by 2030 and 1050 GWh of battery capacity by 2032. DOE estimates plant announcements of ~1,000 GWh by 2030; furthermore, the battery market is an international market where IEA projects 3.7 terrawatt hours (TWh) of battery globally by 2030 in their ''Sustainable Development Scenario'' [314]

In addition, the IRA and the BIL are providing significant support to accelerate these efforts to build out a U.S. supply chain for mineral, cell, and battery production. The IRA offers sizeable incentives and other support for further development of domestic and North American manufacture of these components. According to the Congressional Budget Office, an estimated $30.6 billion will be realized by manufacturers through the Advanced Manufacturing Production Credit, which includes a tax credit to manufacturers for battery production in the United States. According to one third-party estimate based on information from Benchmark Mineral Intelligence, the recent increase in U.S. battery manufacturing plant announcements could increase this figure to $136 billion or more.[315] Another $6.2 billion or more may be realized through expansion of the Advanced Energy Project Credit, a 30 percent tax credit for investments in projects that reequip, expand, or establish certain energy manufacturing facilities.[316] Together, these provisions create a strong motivation for manufacturers to support the continued development of a North American supply chain and already appear to be proving influential on the plans of manufacturers to procure domestic or North American mineral and component sources and to construct domestic manufacturing facilities to claim the benefits of the act.[317] [318]

In addition, the BIL provides $7.9 billion to support development of the domestic supply chain for battery manufacturing, recycling, and critical minerals.[319] Notably, it supports the

massive acceleration of EV output''. *Autonomive Logistics.* September 28, 2021. Available online: *https://www.automotivelogistics.media/battery-supply-chain/ford-to-build-battery-and-assembly-plants-in-kentucky-and-tennessee-for-massive-acceleration-of-ev-output/42325.article#.*

[300] Shepardson, David. ''GM, LG Energy drop plan for fourth U.S. JV battery plant''. *Reuters.* January 20, 2023. Available online: *https://www.reuters.com/technology/gm-lg-energy-drop-plan-fourth-us-jv-battery-plant-2023-01-20/.*

[301] LG Chem, ''LG Chem to Establish Largest Cathode Plant in US for EV Batteries,'' Press Release, November 22, 2022.

[302] Randall, Chris. ''CATL likely to build US battery plant in Kentucky or South Carolina''. *Electrive.* May 6, 2022. Available online: *https://www.electrive.com/2022/05/06/catl-likely-to-build-us-battery-plant-in-kentucky-or-south-carolina/.*

[303] Kane, Mark. ''Daimler and CATL Expand Global Battery Partnership''. *InsideEVs.* May 23, 2022. Available online: *https://insideevs.com/news/509050/daimler-catl-global-battery-partnership/.*

[304] Alvarez, Simon. ''Tesla partner Panasonic looking at potential EV battery plant in Oklahoma: report''. TeslaRati. August 26, 2022. Available online: *https://www.teslarati.com/tesla-panasonic-plans-new-ev-battery-factory-usa/.*

[305] CNBC, ''Tesla plans to spend $3.6 billion more on battery and truck manufacturing in Nevada,'' January 24, 2023. Accessed on March 21, 2023 at *https://www.cnbc.com/2023/01/24/tesla-plans-to-spend-3point6-billion-more-on-manufacturing-in-nevada.html.*

[306] Toyota. ''Toyota Announces $2.5 Billion Expansion of North Carolina Plant with 350 Additional Jobs and BEV Battery Capacity''. August 31, 2022. Available online: *https://pressroom.toyota.com/toyota-announces-2-5-billion-expansion-of-north-carolina-plant-with-350-additional-jobs-and-bev-battery-capacity/.*

[307] Doll, Scooter. ''Volkswagen reportedly considering a second US production site plus new battery cell plant''. Available online: *https://electrek.co/2022/04/29/volkswagen-reportedly-considering-a-second-us-production-site-plus-new-battery-cell-plant/.*

[308] S&P Global Market Intelligence, ''US ready for a battery factory boom, but now it needs to hold the charge,'' October 3, 2022. Accessed on November 22, 2022 at *https://www.spglobal.com/marketintelligence/en/news-insights/latest-news-headlines/us-ready-for-a-battery-factory-boom-but-now-it-needs-to-hold-the-charge-72262329.*

[309] S&P Global Mobility, ''Growth of Li-ion battery manufacturing capacity in key EV markets,'' May 20, 2022. Accessed on November 22, 2022 at *https://www.spglobal.com/mobility/en/research-analysis/growth-of-liion-battery-manufacturing-capacity.html.*

[310] Federal Consortium for Advanced Batteries, ''National Blueprint for Lithium Batteries 2021–2030,'' June 2021. Available at *https://www.energy.gov/sites/default/files/2021-06/FCAB%20National%20Blueprint%20Lithium%20Batteries%200621_0.pdf.*

[311] S&P Global Mobility, ''Growth of Li-ion battery manufacturing capacity in key EV markets,'' May 20, 2022. Accessed on November 22, 2022 at *https://www.spglobal.com/mobility/en/research-analysis/growth-of-liion-battery-manufacturing-capacity.html.*

[312] Argonne National Laboratory, ''Assessment of Light-Duty Plug-in Electric Vehicles in the United States, 2010–2021,'' ANL–22/71, November 2022.

[313] The Light- and Medium-Duty Multipollutant Emissions Standards proposed rule, titled ''Multi-Pollutant Emissions Standards for Model Years 2027 and Later Light-Duty and Medium-Duty Vehicles,'' was signed by the Administrator on the same day as this proposal. Available at *https://www.epa.gov/regulations-emissions-vehicles-and-engines/proposed-rule-multi-pollutant-emissions-standards-model.*

[314] IEA, ''Annual EV battery demand projections by region and scenario, 2020–2030'', October 26, 2022. Available at *https://www.iea.org/data-and-statistics/charts/annual-ev-battery-demand-projections-by-region-and-scenario-2020-2030.*

[315] *Axois.com*, ''Axios What's Next,'' February 1, 2023. Accessed on March 1, 2023 at *https://www.axios.com/newsletters/axios-whats-next-1185bdcc-1b58-4a12-9f15-8ffc8e63b11e.html?chunk=0&utm_term=emshare#story0.*

[316] Congressional Research Service, ''Tax Provisions in the Inflation Reduction Act of 2022 (H.R. 5376),'' August 10, 2022.

[317] Subramanian, P., ''Why Honda's EV battery plant likely wouldn't happen without new climate credits,'' Yahoo Finance, August 29, 2022.

[318] LG Chem, ''LG Chem to Establish Largest Cathode Plant in US for EV Batteries,'' Press Release, November 22, 2022.

[319] Congressional Research Service, ''Energy and Minerals Provisions in the Infrastructure

Continued

development and implementation of a $675 million Critical Materials Research, Development, Demonstration, and Commercialization Program administered by the Department of Energy (DOE),[320] and has created numerous other programs in related areas, such as for example, critical minerals data collection by the USGS.[321] Provisions extend across several areas including critical minerals mining and recycling research, USGS energy and minerals research, rare earth elements extraction and separation research and demonstration, and expansion of DOE loan programs in critical minerals and zero-carbon technologies.[322] [323] The Department of Energy is working to facilitate and support further development of the supply chain, by identifying weaknesses for prioritization and rapidly funding those areas through numerous programs and funding opportunities.[324] [325] [326] According to a final report from the Department of Energy's Li-Bridge alliance,[327] ''the U.S. industry can double its value-added share by 2030 (capturing an additional $17 billion in direct value-add annually and 40,000 jobs in 2030 from mining to cell manufacturing), dramatically increase U.S. national and economic security, and position itself on the path to a near-circular economy by 2050.'' [328] The $7.9 billion provided by the BIL for U.S. battery supply chain projects [329] represents a total of about $14 billion when industry cost matching is considered.[330] [331] Other recently announced projects will utilize another $40 billion in private funding.[332] According to DOE's Li-Bridge alliance, the total of these commitments already represents more than half of the capital investment that Li-Bridge considers necessary for supply chain investment to 2030.[333]

Further, the DOE Loan Programs Office is administering a major loans program focusing on extraction, processing and recycling of lithium and other critical minerals that will support continued market growth,[334] through the Advanced Technology Vehicles Manufacturing (ATVM) Loan Program and Title 17 Innovative Energy Loan Guarantee Program. This program includes over $20 billion of available loans and loan guarantees to finance critical materials projects.

c. Mineral Security

As stated at the beginning of this Section II.D, it is our assessment that increased electrification in the U.S. transportation sector does not constitute a vulnerability to national security, for several reasons supported by the discussion in this preamble and in DRIA 1.5.1.2.

A domestic supply chain for battery and cell manufacturing is rapidly forming by the actions of stakeholders including vehicle manufacturers and suppliers who wish to take advantage of the business opportunities that this need presents, and by vehicle manufacturers who recognize the need to remain competitive in a global market that is shifting to electrification. It is therefore already a goal of the U.S. manufacturing industry to create a robust supply chain for these products, in order to supply not only the domestic vehicle market, but also all of the other applications for these products in global markets as the world decarbonizes.

Further, the IRA and BIL are proving to be a highly effective means by which Congress and the Administration have provided support for the building of a robust supply chain, and to accelerate this activity to ensure that it forms as rapidly as possible. An example is the work of Li Bridge, a public-private alliance committed to accelerating the development of a robust and secure domestic supply chain for lithium-based batteries. It has set forth a goal that by 2030 the United States should capture 60 percent of the economic value associated with the U.S. domestic demand for lithium batteries. Achieving this target would double the economic value expected in the United States under ''business as usual'' growth.[335] More evidence of recent growth in the supply chain is found in a February 2023 report by Pacific Northwest National Laboratory (PNNL), which documents robust growth in the North American lithium battery industry.[336]

Finally, it is important to note that utilization of critical minerals is different from the utilization of foreign oil, in that oil is consumed as a fuel while minerals become a constituent of manufactured vehicles. That is, mineral security is not a perfect analogy to energy security. Supply disruptions and fluctuating prices are relevant to critical minerals as well, but the impacts of such disruptions are felt differently and by different parties. Disruptions in oil supply or gasoline price has an immediate impact on consumers through higher fuel prices, and thus constrains the ability to travel. In contrast, supply disruptions or price fluctuations of minerals affect only the production and price of new vehicles. In practice, short-term price fluctuations do not always translate to higher production cost as most manufacturers purchase minerals via long-term contracts that insulate them to a degree from changes in spot prices. Moreover, critical minerals are not a single

Investment and Jobs Act (Pub. L. 117–58)'', February 16, 2022. *https://crsreports.congress.gov/product/pdf/R/R47034*.

[320] Department of Energy, ''DOE Seeks Public Input on Critical Materials Research Program to Strengthen Clean Energy Technology Manufacturing in America,'' August 9, 2022. Available at *https://www.energy.gov/articles/biden-harris-administration-launches-675-million-bipartisan-infrastructure-law-program*.

[321] U.S. Geological Survey, ''Bipartisan Infrastructure Law supports critical-minerals research in central Great Plains,'' October 26, 2022. Available at *https://www.usgs.gov/news/state-news-release/bipartisan-infrastructure-law-supports-critical-minerals-research-central*.

[322] Congressional Research Service, ''Energy and Minerals Provisions in the Infrastructure Investment and Jobs Act (Pub. L. 117–58)'', February 16, 2022. *https://crsreports.congress.gov/product/pdf/R/R47034*.

[323] International Energy Agency, ''Infrastructure and Jobs act: Critical Minerals,'' October 26, 2022. *https://www.iea.org/policies/14995-infrastructure-and-jobs-act-critical-minerals*.

[324] Department of Energy, Li-Bridge, ''Building a Robust and Resilient U.S. Lithium Battery Supply Chain,'' February 2023.

[325] The White House, ''Building Resilient Supply Chains, Revitalizing American Manufacturing, and Fostering Broad-Based Growth,'' 100-Day Reviews under Executive Order 14017, June 2021.

[326] Federal Consortium for Advanced Batteries, ''National Blueprint for Lithium Batteries 2021–2030,'' June 2021. Available at *https://www.energy.gov/sites/default/files/2021-06/FCAB%20National%20Blueprint%20Lithium%20Batteries%200621_0.pdf*.

[327] Argonne National Laboratory. ''Li-Bridge''. Available online: *https://www.anl.gov/li-bridge*.

[328] Department of Energy, Li-Bridge, '' Building a Robust and Resilient U.S. Lithium Battery Supply Chain,'' February 2023.

[329] Congressional Research Service, ''Energy and Minerals Provisions in the Infrastructure Investment and Jobs Act (Pub. L. 117–58)'', February 16, 2022. *https://crsreports.congress.gov/product/pdf/R/R47034*.

[330] Department of Energy, Li-Bridge, ''Building a Robust and Resilient U.S. Lithium Battery Supply Chain,'' February 2023 (p. 9).

[331] Department of Energy, EERE Funding Opportunity Exchange, EERE Funding Opportunity Announcements. Accessed March 4, 2023 at *https://eere-exchange.energy.gov/Default.aspx#FoaId0596def9-c1cc-478d-aa4f-14b472864eba*.

[332] Federal Reserve Bank of Dallas, ''Automakers' bold plans for electric vehicles spur U.S. battery boom,'' October 11, 2022. Accessed on March 4, 2023 at *https://www.dallasfed.org/research/economics/2022/1011*.

[333] Department of Energy, Li-Bridge, ''Building a Robust and Resilient U.S. Lithium Battery Supply Chain,'' February 2023 (p. 9).

[334] Department of Energy Loan Programs Office, ''Critical Materials Loans & Loan Guarantees,'' *https://www.energy.gov/sites/default/files/2021-06/DOE-LPO_Program_Handout_Critical_Materials_June2021_0.pdf*.

[335] Department of Energy, Li-Bridge, ''Building a Robust and Resilient U.S. Lithium Battery Supply Chain,'' February 2023.

[336] Pacific Northwest National Laboratory, ''North American Lithium Battery Materials V 1.2,'' February 2023. Available at *https://www.pnnl.gov/projects/north-american-lithium-battery-materials-industry-report*.

commodity but a number of distinct commodities, each having its own supply and demand dynamics, and some being capable of substitution by other minerals.[337] Importantly, while oil is consumed as a fuel and thus requires continuous supply, minerals become part of the vehicle and have the potential to be recovered and recycled. Thus even when minerals are imported from other countries, their acquisition adds to the domestic mineral stock that is available for domestic recycling in the future.

Over the long term, battery recycling will be a critical component of the BEV supply chain and will contribute to mineral security and sustainability, effectively acting as a domestically produced mineral source that reduces overall reliance on foreign-sourced products. While the number of end-of-life BEV batteries available for recycling will lag the market penetration of BEVs, it is important to consider the projected growth in development of a battery recycling supply chain during the time frame of the rule and beyond.

By 2050, battery recycling could be capable of meeting 25 to 50 percent of total lithium demand for battery production.[338] [339] To this end, battery recycling is avery active area of research. The Department of Energy coordinates much research in this area through the ReCell Center, described as ''a national collaboration of industry, academia and national laboratories working together to advance recycling technologies along the entire battery life-cycle for current and future battery chemistries.'' [340] Funding is also being disbursed as directed by the BIL, as discussed in Chapter 1.3.2 of the DRIA.[341] A growing number of private companies are entering the battery recycling market as the rate of recyclable material becoming available from battery production facilities and salvaged vehicles has grown, and manufacturers are already reaching agreements to use these recycled materials for domestic battery manufacturing. For example, Panasonic has contracted with Redwood Materials Inc. to supply domestically processed cathode material, much of which will be sourced from recycled batteries.[342]

Recycling infrastructure is one of the targets of several provisions of the BIL. It includes a Battery Processing and Manufacturing program, which grants significant funds to promote U.S. processing and manufacturing of batteries for automotive and electric grid use, by awarding grants for demonstration projects, new construction, retooling and retrofitting, and facility expansion. It will provide a total of $3 billion for battery material processing, $3 billion for battery manufacturing and recycling, $10 million for a lithium-ion battery recycling prize competition, $60 million for research and development activities in battery recycling, an additional $50 million for state and local programs, and $15 million to develop a collection system for used batteries. In addition, the Electric Drive Vehicle Battery Recycling and Second-Life Application Program will provide $200 million in funds for research, development, and demonstration of battery recycling and second-life applications.[343]

The efforts to fund and build a mid-chain processing supply chain for active materials and related products will also be important to reclaiming minerals through domestic recycling. While domestic recycling can recover minerals and other materials needed for battery cell production, they commonly are recovered in elemental forms that require further midstream processing into precursor substances and active material powders that can be used in cell production. The DOE ReCell Center coordinates extensive research on development of a domestic lithium-ion recycling supply chain, including direct recycling, in which materials can be recycled for direct use in cell production without destroying their chemical structure, and advanced resource recovery which uses chemical conversion to recover raw minerals for processing into new constituents.[344]

Currently, pilot-scale battery recycling research projects and private recycling startups have access to only limited amounts of recycling stock that originate from sources such as manufacturer waste, crashed vehicles, and occasional manufacturer recall/repair events. As ZEVs are currently only a small portion of the U.S. vehicle stock, some time will pass before vehicle scrappage can provide a steady supply of end-of-life batteries to support large-scale battery recycling. During this time, we expect that the midchain processing portion of the supply chain will continue to develop and will be able to capture much of the resources made available by the recycling of used batteries coming in from the fleet.[345]

3. HD Fuel Cell Electric Vehicle Technology

Fuel cell technologies that run on hydrogen have been in existence for decades, though they are just starting to enter the heavy-duty transportation market. Hydrogen FCEVs are similar to BEVs in that they have batteries and use an electric motor instead of an internal combustion engine to power the wheels. Unlike BEVs that need to be plugged in to recharge, FCEVs have fuel cell stacks that use a chemical reaction involving hydrogen to generate electricity. Fuel cells with electric motors are two-to-three times more efficient than ICEs that run on gasoline or diesel, requiring less energy to fuel.[346]

Hydrogen FCEVs do not emit air pollution at the tailpipe—only heat and pure water.[347] With current and near-future technologies, energy can be stored more densely onboard a vehicle as gaseous or liquid hydrogen than it can as electrons in a battery. This allows FCEVs to perform periods of service between fueling events that batteries currently cannot achieve without affecting vehicle weight and limiting payload capacity. Thus, fuel cells are of interest for their potential use in heavy-duty sectors that are difficult to electrify

[337] For example, manganese can be subsituted by aluminum in the case of nickel-manganese-cobalt (NMC) and nickel-cobalt-aluminum (NCA) batteries. Likewise, a LFP battery uses iron phophaste chemistry without nickel, manganese, cobalt or aluminum. Research has also been conducted to study the replacement of lithium with sodium ions.

[338] Sun et al., ''Surging lithium price will not impede the electric vehicle boom,'' *Joule*, doi:10.1016/j.joule. 2022.06.028 (*https://dx.doi.org/10.1016/j.joule.2022.06.028*).

[339] Ziemann et al., ''Modeling the potential impact of lithium recycling from EV batteries on lithium demand: a dynamic MFA approach,'' Resour. Conserv. Recycl. 133, pp. 76–85. *https://doi.org/10.1016/j.resconrec.2018.01.031*.

[340] ReCell Advanced Battery Remanufacturing. *https://recellcenter.org/about/*.

[341] Department of Energy, ''Biden-Harris Administration Announces Nearly $74 Million To Advance Domestic Battery Recycling And Reuse, Strengthen Nation's Battery Supply Chain,'' Press Release, November 16, 2022.

[342] Randall, T., ''The Battery Supply Chain Is Finally Coming to America,'' Bloomberg, November 15, 2022.

[343] Environmental Defense Fund and ERM, ''Electric Vehicle Market Update: Manufacturer Commitments and Public Policy Initiatives Supporting Electric Mobility in the U.S. and Worldwide,'' September 2022.

[344] Department of Energy, ''The ReCell Center for Advanced Battery Recycling FY22 Q4 Report,'' October 20, 2022. Available at: *https://recellcenter.org/2022/12/15/recell-advanced-battery-recycling-center-fourth-quarter-progress-report-2022/*.

[345] Department of Energy, ''Biden-Harris Administration Announces Nearly $74 Million To Advance Domestic Battery Recycling and Reuse, Strengthen Nation's Battery Supply Chain,'' Press Release, November 16, 2022.

[346] U.S. Department of Energy, Vehicle Technologies Office. ''Hydrogen Basics''. Alternative Fuels Data Center. Available online: *https://afdc.energy.gov/fuels/hydrogen_basics.html*.

[347] U.S. Department of Energy, Fuel Cell Technologies Office. ''Fuel Cells''. November 2015. Available online: *https://www.energy.gov/sites/prod/files/2015/11/f27/fcto_fuel_cells_fact_sheet.pdf*.

using batteries due to range or weight limitations.

In the following sections, and in DRIA Chapter 1.7, we discuss key technology components unique to HD FCEVs. We request comment on our assessment and data to support our assessment of FCEV technology for the final rule.

i. Fuel Cell Stack

A fuel cell system is composed of a fuel cell stack and ''balance of plant'' (BOP) components that support the fuel cell stack (*e.g.,* pumps, sensors, compressors, humidifiers). A fuel cell stack is a module that may contain hundreds of fuel cell units, typically combined in series.[348] A heavy-duty FCEV may have several fuel cell stacks to meet the power needs of a comparable ICE vehicle.

Though there are many types of fuel cell technologies, polymer electrolyte membrane (PEM) fuel cells are typically used in transportation applications because they offer high power density, therefore have low weight and volume, and can operate at relatively low temperatures.[349] PEM fuel cells are built using membrane electrode assemblies (MEA) and supportive hardware. The MEA includes the PEM electrolyte material, catalyst layers (anode and cathode), and gas diffusion layers.[350] Hydrogen fuel and oxygen enter the MEA and chemically react to generate electricity, which is either used to propel the vehicle or is stored in a battery to meet future power needs. The process creates excess water vapor and heat.

Key BOP components include the air supply system that provides oxygen, the hydrogen supply system, and the thermal management system. With the help of compressors and sensors, these components monitor and regulate the pressure and flow of the gases supplied to the fuel cell along with relative humidity and temperature. Similar to ICEs and batteries, PEM fuel cells require thermal management systems to control the operating temperatures. It is necessary to control operating temperatures to maintain stack voltage and the efficiency and performance of the system. There are different strategies to mitigate excess heat that comes from operating a fuel cell. For example, a HD vehicle may include a cooling system the circulates cooling fluid through the stack.[351] Waste heat recovery solutions are also emerging.[352] The excess heat also can be in turn used to heat the cabin, similar to ICE vehicles. Power consumed to operate BOP components can also impact the stack's efficiency.[353] [354] [355]

To improve fuel cell performance, the air and hydrogen fuel that enter the system may be compressed, humidified, and/or filtered.[356] A fuel cell operates best when the air and the hydrogen are free of contaminants, since contaminants can poison and damage the catalyst. PEM fuel cells require hydrogen that is over 99 percent pure, which can add to the fuel production cost.[357] Hydrogen produced from natural gas tends to initially have more impurities (*e.g.,* carbon monoxide and ammonia, associated with the reforming of hydrocarbons) than hydrogen produced from water through electrolysis.[358] There are standards such as ISO 14687 that include hydrogen fuel quality specifications for use in vehicles to minimize impurities.[359]

Fuel cell durability is important in heavy-duty applications, given that vehicle owners and operators often have high expectations for drivetrain lifetimes in terms of years, hours, and miles. Fuel cells can be designed to meet durability needs, or the ability of the stack to maintain its performance over time. Considerations must be included in the design to accommodate operations in less-than-optimized conditions. For example, prolonged operation at high voltage (low power) or when there are multiple transitions between high and low voltage can stress the system. As a fuel cell system ages, a fuel cell's MEA materials can degrade, and performance and maximum power output can decline. The fuel cell can become less efficient, which can cause it to generate more excess heat and consume more fuel.[360] DOE's ultimate long-term technology target for Class 8 HD trucks is a fuel cell lifetime of 30,000 hours, corresponding to an expected vehicle lifetime of 1.2 million miles.[361] A voltage degradation of 10 percent at rated power (*i.e.,* the power level the cell is designed for) by end-of-life is considered by DOE when evaluating targets.[362]

Currently, the fuel cell stack is the most expensive component of a heavy-duty FCEV, primarily due to the technological requirements of manufacturing rather than raw material costs.[363] Larger production volumes are anticipated as global demand increases for fuel cell systems for HD vehicles, which could improve economies of scale.[364] Costs are also anticipated to decline as durability improves, which could extend the life of fuel cells and reduce the need for parts replacement.[365] Fuel cells contain PEM catalysts that typically are made using precious metals from the platinum

[348] U.S. Department of Energy, Hydrogen and Fuel Cell Technologies Office. ''Fuel Cell Systems''. Available online: *https://www.energy.gov/eere/fuelcells/fuel-cell-systems.*

[349] U.S. Department of Energy, Hydrogen and Fuel Cell Technologies Office. ''Types of Fuel Cells''. Available online: *https://www.energy.gov/eere/fuelcells/types-fuel-cells.*

[350] U.S. Department of Energy, Hydrogen and Fuel Cell Technologies Office. ''Parts of a Fuel Cell''. Available online: *https://www.energy.gov/eere/fuelcells/parts-fuel-cell.*

[351] Hyfindr. ''Fuel Cell Stack''. Available online: *https://hyfindr.com/fuel-cell-stack/.*

[352] Baroutaji, Ahmad, et al. ''Advancements and prospects of thermal management and waste heat recovery of PEMFC''. *Interational Journal of Thermofluids:* 9. February 2021. Available online: *https://www.sciencedirect.com/science/article/pii/S2666202721000021.*

[353] Hoeflinger, Johannes and Peter Hofmann. ''Air mass flow and pressure optimization of a PEM fuel cell range extender system''. *International Journal of Hydrogen Energy.* Volume 45:53. October 02020. Available online: *https://www.sciencedirect.com/science/article/pii/S0360319920327841.*

[354] Pardhi, Shantanu, et al. ''A Review of Fuel Cell Powertrains for Long-Haul Heavy-Duty Vehicles: Technology, Hydrogen, Energy and Thermal Management Systems''. *Energies.* December 2022. Available online: *https://www.mdpi.com/1996-1073/15/24/9557.*

[355] Hyfindr. ''Fuel Cell Stack''. Available online: *https://hyfindr.com/fuel-cell-stack/.*

[356] U.S .Environmental Protection Agency. ''Assessment of Fuel Cell Technologies at Ports''. Prepared for EPA by Eastern Research Group, Inc. July 2022. Available online: *https://nepis.epa.gov/Exe/ZyPDF.cgi?Dockey=P1015AQX.pdf.*

[357] US Drive. ''Hydrogen Production Tech Team Roadmap''. November 2017. Available online: *https://www.energy.gov/eere/vehicles/articles/us-drive-hydrogen-production-technical-team-roadmap.*

[358] Nhuyen, Huu Linh, et al. ''Review of the Durability of Polymer Electrolyte Membrane Fuel Cell in Long-Term Operation: Main Influencing Parameters and Testing Protocols''. *Energies.* July 2021. Available online: *https://www.mdpi.com/1996-1073/14/13/4048.*

[359] International Organization for Standardization. ''ISO 14687: 2019, Hydrogen fuel quality—Product specification''. November 2019. Available online: *https://www.iso.org/standard/69539.html.*

[360] Nhuyen, Huu Linh, et al. ''Review of the Durability of Polymer Electrolyte Membrane Fuel Cell in Long-Term Operation: Main Influencing Parameters and Testing Protocols''. *Energies.* July 2021. Available online: *https://www.mdpi.com/1996-1073/14/13/4048.*

[361] Marcinkoski, Jason et al. ''DOE Advanced Truck Technologies: Subsection of the Electrified Powertrain Roadmap—Technical Targets for Hydrogen-Fueled Long-Haul Tractor-Trailer Trucks. October 31, 2019. Available online: *https://www.hydrogen.energy.gov/pdfs/19006_hydrogen_class8_long_haul_truck_targets.pdf.*

[362] Marcinkoski, Jason et al. ''DOE Advanced Truck Technologies: Subsection of the Electrified Powertrain Roadmap—Technical Targets for Hydrogen-Fueled Long-Haul Tractor-Trailer Trucks. October 31, 2019. Available online: *https://www.hydrogen.energy.gov/pdfs/19006_hydrogen_class8_long_haul_truck_targets.pdf.*

[363] Deloitte China. ''Fueling the Future of Mobility: Hydrogen and fuel cell solutions for transportation, Volume 1''. 2020. Available online: *https://www2.deloitte.com/content/dam/Deloitte/cn/Documents/finance/deloitte-cn-fueling-the-future-of-mobility-en-200101.pdf.*

[364] *Ibid.*

[365] *Ibid.*

group, which are expensive but efficient and can withstand conditions in a cell. With today's technology, roughly 50 grams of platinum may be required for a 160-kW fuel cell in a vehicle.[366] Platinum group metals are classified as critical minerals in the DOE Critical Minerals and Materials Strategy.[367] Efforts are underway to minimize or eliminate the use of platinum in catalysts.[368]

ii. Fuel Cell and Battery Interaction

The instantaneous power required to move a FCEV can come from either the fuel cell stack, the battery, or a combination of both. Interactions between the fuel cell stacks and batteries of a FCEV can be complex and may vary based on application. Each manufacturer likely would employ a unique strategy to optimize the durability of these components and manage costs. The strategy selected would impact the size of the fuel cell stack and the size of the battery.

The fuel cell stack can be used to charge the battery that in turn powers the wheels (*i.e.,* series hybrid or range-extending), or it can work with the battery to provide power (*i.e.,* parallel hybrid or primary power) to the wheels. In the emerging HD FCEV market, when used to extend range, the fuel cell tends to have a lower peak power potential and may be sized to match the average power needed during a typical use cycle, including steady highway driving. At idle, the fuel cell may run at minimal power or turn off based on state of charge of the battery. The battery is used during prolonged high-power operations such as grade climbing and is typically in charge-sustaining mode, which means the average state of charge is maintained above a certain level while driving. When providing primary power, the fuel cell tends to have a larger peak power potential, sized to match all power needs of a typical duty cycle and to meet instantaneous power needs. The battery is mainly used to capture energy from regenerative braking and to help with acceleration and other transient power demands.[369]

Based on how the fuel cell stacks and batteries are managed, manufacturers may use different types of batteries in HD FCEVs. Energy battery cells are typically used to store energy for applications with distance needs, so may be used more with range-extending fuel cells in vehicles with a relatively large battery. Power battery cells are typically used to provide additional high power for applications with high power needs in primary power fuel cell-dominant vehicles.[370]

iii. Onboard Hydrogen Storage Tanks

Fuel cell vehicles carry hydrogen fuel onboard using large tanks. Hydrogen has extremely low density, so it must be compressed or liquified for use. There are various techniques for storing hydrogen onboard a vehicle, depending on how much fuel is needed to meet range requirements. Most transportation applications today use Type IV tanks,[371] which typically include a plastic liner wrapped with a composite material such as carbon fiber that can withstand high pressures with minimal weight.[372] [373] High-strength carbon fiber is expensive, accounting for over 50 percent of the cost of onboard storage at production volumes of over 100,000 tanks per year.[374]

Some existing fuel cell buses use compressed hydrogen gas at 350 bars (~5,000 pounds per square inch, or psi) of pressure, but other applications are using tanks with increased compressed hydrogen gas pressure at 700 bar (~10,000 psi) for extended driving range.[375] A Heavy-Duty Vehicle Industry Group was formed in 2019 to standardize 700 bar high-flow fueling hardware components globally that meet fueling speed requirements (*i.e.,* so that fill times are similar to comparable HD ICE vehicles, as identified in DOE technical targets for Class 8 long-haul tractor-trailers).[376] High-flow refueling rates for heavy-duty vehicles of 60–80 kg hydrogen in under 10 minutes were recently demonstrated in a DOE lab setting.[377] [378] [379]

Based on our review of the literature, we believe that most HD vehicles likely have sufficient physical space to package hydrogen storage tanks onboard.[380] Geometry and packing challenges may constrain the amount of gaseous hydrogen that can be stored onboard and, thus, the maximum range of trucks that travel longer distances without a stop for fuel.[381] Liquid hydrogen is emerging as a cost-effective onboard storage option for long-haul operations; however, the technology readiness of liquid storage and refueling technologies is relatively low compared to compressed gas technologies.[382]

[366] James, Brian D., et al. ''Fuel Cell Truck System Cost Analysis''. Strategic Analysis Inc. July 2018. Available online: *https://www.energy.gov/sites/prod/files/2018/08/f54/fcto-truck-workshop-2018-10-james.pdf.*

[367] U.S. Department of Energy, Advanced Manufacturing & Industrial Decarbonization Office. ''Critical Minerals & Materials''. Available online: *https://www.energy.gov/eere/amo/critical-minerals-materials.*

[368] Berkeley Lab. ''Strategies for Reducing Platinum Waste in Fuel Cells. November 2021. Available online: *https://als.lbl.gov/strategies-for-reducing-platinum-waste-in-fuel-cells/.*

[369] Islam, Ehsan Sabri, Ram Vijayagopal, Aymeric Rousseau. ''A Comprehensive Simulation Study to Evaluate Future Vehicle Energy and Cost Reduction Potential'', *Report to the U.S. Department of Energy, Contract ANL/ESD-22/6.* October 2022. See Full report. Available online: *https://vms.taps.anl.gov/research-highlights/u-s-doe-vto-hfto-r-d-benefits/.*

[370] Sharpe, Ben and Hussein Basma. ''A Meta-Study of Purchase Costs for Zero-Emission Trucks''. The International Council on Clean Transportation. February 2022. Available online: *https://theicct.org/publication/purchase-cost-ze-trucks-feb22/.*

[371] Type I–III tanks are not typically used in transportation for reasons related to low hydrogen density, metal embrittlement, weight, or cost.

[372] Langmi, Henrietta et. al. ''Hydrogen storage''. Electrochemical Power Sources: Fundamentals, Systems, and Applications. 2022. Portion available online: *https://www.sciencedirect.com/topics/engineering/compressed-hydrogen-storage.*

[373] U.S. Department of Energy, Fuel Cell Technologies Office. ''Hydrogen Storage''. March 2017. Available online: *https://www.energy.gov/sites/prod/files/2017/03/f34/fcto-h2-storage-fact-sheet.pdf.*

[374] Houchins, Cassidy and Brian D. James. ''2019 DOE Hydrogen and Fuel Cell Program Review: Hydrogen Storage Cost Analysis''. Strategic Analysis. May 2019. Available online: *https://www.hydrogen.energy.gov/pdfs/review19/st100_james_2019_o.pdf.*

[375] Basma, Hussein and Felipe Rodriquez. ''Fuel cell electric tractor-trailers: Technology overview and fuel economy''. Working Paper 2022–23. The International Council on Clean Transportation. July 2022. Available online: *https://theicct.org/wp-content/uploads/2022/07/fuel-cell-tractor-trailer-tech-fuel-jul22.pdf.*

[376] NextEnergy. ''Hydrogen Heavy Duty Vehicle Industry Group''. Available online: *https://nextenergy.org/hydrogen-heavy-duty-vehicle-industry-group/.*

[377] DOE suggests that 60 kg of H2 will be required to achieve a 750-mile range in a Class 8 tractor-trailer truck, assuming a fuel economy of 12.4 miles per kilogram. In the DOE lab, one fill (61.5 kg) was demonstrated from the fueling station into seven type-IV tanks of a HD vehicle simulator, and the second fill (75.9 kg) was demonstrated from the station into nine tanks.

[378] Marcinkoski, Jason et. al. ''DOE Advanced Truck Technologies: Subsection of the Electrified Powertrain Roadmap—Technical Targets for Hydrogen-Fueled Long-Haul Tractor-Trailer Trucks. October 31, 2019. Available online: *https://www.hydrogen.energy.gov/pdfs/19006_hydrogen_class8_long_haul_truck_targets.pdf.*

[379] Martineau, Rebecca. ''Fast Flow Future for Heavy-Duty Hydrogen Trucks: Expanded Capabilities at NREL Demonstration High-Flow-Rate Hydrogen Fueling for Heavy-Duty Applications''. National Renewable Energy Lab. June 2022. Available online: *https://www.nrel.gov/news/program/2022/fast-flow-future-heavy-duty-hydrogen-trucks.html.*

[380] Kast, James et. al. ''Designing hydrogen fuel cell electric trucks in a diverse medium and heavy duty market''. *Research in Transportation Economics:* Volume 70. October 2018. Available online: *https://www.sciencedirect.com/science/article/pii/S0739885916301639.*

[381] Basma, Hussein and Felipe Rodriquez. ''Fuel cell electric tractor-trailers: Technology overview and fuel economy''. Working Paper 2022–23. The International Council on Clean Transportation. July 2022. Available online: *https://theicct.org/wp-content/uploads/2022/07/fuel-cell-tractor-trailer-tech-fuel-jul22.pdf.*

[382] Basma, Hussein and Felipe Rodriquez. ''Fuel cell electric tractor-trailers: Technology overview and fuel economy''. Working Paper 2022–23. The

Continued

Nonetheless, companies like Daimler and Hyzon are pursuing onboard liquid hydrogen to minimize potential payload impacts and maintain the flexibility to drive up to 1,000 miles between refueling, comparable to today's diesel ICE vehicle refueling ranges.[383] [384] Therefore given our assessment of technology readiness, liquid storage tanks were not included as part of the technology packages that support the feasibility and appropriateness of our proposed standards. We request comment and data related to packaging space availability associated with FCEVs and projections for the development and application of liquid hydrogen in the HD transportation sector over the next decade.

iv. HD FCEV Safety Assessment

FCEVs have two potential risk factors that can be mitigated through proper design, process, and training: hydrogen and electricity. Electricity risks are identical to those of BEVs and, thus, are discussed in Section II.D.2 and DRIA Chapter 1.5.2. Hydrogen risks can occur throughout the process of fueling a vehicle. FCEVs must be designed such that hydrogen can safely be delivered to a vehicle and then transferred into a vehicle's onboard storage tanks and fuel cell stacks. Hydrogen has been handled, used, stored, and moved in industrial settings for more than 50 years, and there are many established methods for doing so safely.[385] There is also federal oversight and regulation throughout the hydrogen supply chain system.[386] Safety training and education are key for maintaining reasonable risk while handling and using hydrogen. For example, hydrogen-related fuel cell vehicle risks can be mitigated by following various SAE and OSHA standards, as discussed in DRIA Chapter 1.7.4. We request comment on our assessment that HD FCEVs can be designed to maintain safety.

4. Summary of Technology Assessment

In prior HD GHG rulemakings, EPA promulgated standards that could feasibly be met through technological improvements in many areas of the vehicle. For example, the HD GHG Phase 2 CO_2 emission standards were premised on technologies such as engine waste heat recovery, advanced aerodynamics (like those developed for DOE's SuperTruck programs), and, in some cases, hybrid powertrains. We evaluated each technology's effectiveness as demonstrated over the regulatory duty cycles using EPA's GEM and estimated the appropriate adoption rate of each technology.[387] We then developed a technology package for each of the regulatory subcategories. We are following a similar approach in this Phase 3 NPRM.

In the HD GHG Phase 2 final rule, we included ZEV technologies in our assessment of the suite of technologies for HD vocational vehicles and tractors. However, in 2016, when the HD GHG Phase 2 rule was being developed, we stated that ''adoption rates for these advanced technologies in heavy-duty vehicles are essentially non-existent today and seem unlikely to grow significantly within the next decade without additional incentives.'' [388] Thus, at that time, instead of including ZEV technologies in the technology packages for setting the Phase 2 standards, we provided advanced technology credit multipliers to help incentivize the development of ZEV technologies.

Since the 2016 promulgation of the HD GHG Phase 2 final rule, as discussed in Section I.C, a number of important factors have contributed to changes in the HD landscape. Therefore, as detailed in this Section II and DRIA Chapter 2, we now are proposing that BEV technologies and FCEV technologies will be technically feasible for HD vehicles and suitable for most applications, as assessed by vehicle type and each Phase 3 MY. As further detailed in this Section II and DRIA Chapter 2, we are also proposing that BEV and FCEV technologies are feasible at the adoption rates included in the technology packages, which vary depending on the respective vehicle type and Phase 3 MY, and thus that the proposed revised standards for MY 2027 and proposed new standards for MYs 2028 through 2032 are feasible and appropriate. Similar to Phase 1 and Phase 2, the technology packages used to support the standards in this proposal include a mix of technologies applied to HD vehicles, and development of those technology packages included an assessment of the projected feasibility of the development and application of BEV, FCEV, and other technologies that reduce GHG emissions from HD vehicles. While our analysis in this Section II.D focuses on certain technologies in the technology packages to demonstrate the feasibility of the proposed HD vehicle GHG emission standards, there are other technologies as described in DRIA Chapter 1 that can reduce CO2 emissions. Under the proposed rule, manufacturers may choose to produce the technologies that work best for their business case and the operator's needs in meeting the proposed standards, as the proposed standards are performance-based and do not mandate any specific technology for any manufacturer or any vehicle subcategory.

EPA developed a bottom-up approach to estimate the operational characteristics and costs of ZEV technologies for this proposal. This approach takes into consideration concerns received on the HD2027 NPRM concerning the proposed revised MY 2027 GHG vehicle standards' analysis presented in the HD2027 NPRM. We developed a new technology assessment tool, Heavy-Duty Technology Resource Use Case Scenario (HD TRUCS), to evaluate the design features needed to meet the power and energy demands of various HD vehicles when using ZEV technologies, as well as costs related to manufacturing, purchasing and operating ICE and ZEV technologies. HD TRUCS is described in more detail in Section II.D.5 and DRIA Chapter 2 but we briefly summarize the approach here.

To build technology packages using HD TRUCS, we created 101 representative HD vehicles that cover the full range of weight classes within the scope of this rulemaking (Class 2b through 8 vocational vehicles and tractors). The representative vehicles cover many aspects of work performed by the industry. This work was translated into energy and power demands per vehicle type based on everyday use of HD vehicles, ranging from moving goods and people to mixing cement. We then identified the technical properties required for a BEV

International Council on Clean Transportation. July 2022. Available online: *https://theicct.org/wp-content/uploads/2022/07/fuel-cell-tractor-trailer-tech-fuel-jul22.pdf*.

[383] Daimler Truck. ''Development milestone: Daimler Truck tests fuel-cell truck with liquid hydrogen''. June 2022. Available online: *https://media.daimlertruck.com/marsMediaSite/en/instance/ko/Development-milestone-Daimler-Truck-tests-fuel-cell-truck-with-liquid-hydrogen.xhtml?oid=51975637*.

[384] Hyzon. ''Hyzon Motors, Chart Industries to Develop Liquid Hydrogen Fuel Cell-Powered Truck, Targeting 1000-Mile Range''. July 2021. Available online: *https://www.hyzonmotors.com/in-the-news/hyzon-motors-chart-industries-to-develop-liquid-hydrogen-fuel-cell-powered-truck-targeting-1000-mile-range*.

[385] Hydrogen Tools. ''Best Practices Overview''. Pacific Northwest National Laboratory. Available online: *https://h2tools.org/bestpractices/best-practices-overview*.

[386] Baird, Austin R. et. al. ''Federal Oversight of Hydrogen Systems''. Sandia National Laboratories. March 2021. Available online: *https://energy.sandia.gov/wp-content/uploads/2021/03/H2-Regulatory-Map-Report_SAND2021-2955.pdf*.

[387] GEM is an EPA vehicle simulation tool used to certify HD vehicles. A detailed description of GEM can be found in the RIA for the HD GHG Phase 2 rulemaking, available at *https://nepis.epa.gov/Exe/ZyPDF.cgi/P100P7NS.PDF?Dockey=P100P7NS.PDF*.

[388] 81 FR 73498 (October 25, 2016).

or FCEV to meet the operational needs of a comparable ICE HD vehicle.[389]

Since batteries can add weight and volume to a vehicle,[390] we evaluated battery mass and physical volume required to package a battery pack. If the performance needs of a BEV resulted in a battery that was too large or heavy, then we did not consider the BEV for that application in our technology package because of, for example, the impact on payload and, thus, potential work accomplished relative to a comparable ICE vehicle.[391]

To evaluate costs, including costs of compliance for manufacturers as well as user costs related to purchasing and operating ZEVs, we sized vehicle components that are unique to ZEVs to meet the work demands of each representative vehicle. We applied cost estimates to each vehicle component based on sizing to assess the difference in total powertrain costs between the ICE and ZEV powertrains. We accounted for the IRA battery tax credit and vehicle tax credit, as discussed in Section II.E.4. We also compared operating costs due to fuel consumption as well as vehicle maintenance and repair, and we included the cost to procure and install depot charging infrastructure for BEVs. For FCEVs, similar to ICE vehicles' infrastructure and fuel costs, we assumed hydrogen infrastructure costs were embedded in the cost of hydrogen fuel.

We relied on research and findings discussed in DRIA Chapters 1 and 2 to conduct this analysis. For MYs 2027 through 2029, we focused primarily on BEV technology. Consistent with our analysis, research shows that BEV technologies can become cost-competitive in terms of total cost of ownership for many HD vehicles by the late 2020s, but it would take longer for FCEVs.[392 393 394] Given that there are more BEV models available today compared to FCEV models (see, *e.g.,* DRIA Chapters 1.7.5 and 1.7.6), we inferred that BEV adoption is likely to happen sooner than the adoption of FCEV technology.

Starting in MY 2030, we also considered FCEV technology for select applications. BEV technology is more energy efficient than FCEV technology but may not be suitable for all applications, such as when the performance needs result in additional battery mass that affects payload. FCEVs are more energy efficient than diesel vehicles and can have shorter refueling times than BEVs with large batteries.[395 396] We considered FCEVs in the technology packages for applications that travel longer distances and/or carry heavier loads (*i.e.,* for those that may be sensitive to refueling times or payload impacts). This included coach buses, heavy-haul tractors, sleeper cab tractors, and day cab tractors.

Though fuel cell technology is still emerging in HD vehicle applications, FCEVs are a viable ZEV technology for heavy-duty transportation[397 398 399] and will be available in the 2030 timeframe (see DRIA Chapter 1.7.5).[400 401 402 403] Inclusion of FCEVs in the technology packages starting in MY 2030 takes into consideration additional lead time to allow manufacturers to design, develop, and manufacture HD FCEV models. Fuel cell technology in other sectors has been in existence for decades[404] and has been demonstrated to be technically feasible in heavy-duty transportation.[405] Interim research and development (R&D) technical targets and projects (see DRIA Chapter 1.7.7) are in place to facilitate necessary improvements in the performance, durability, and costs of hydrogen-fueled long-haul HD tractors in 2030.[406] With substantial federal investment in low-GHG hydrogen production (see DRIA Chapter 1.3.2), we project that the price of hydrogen fuel will drop enough by 2030 to make HD FCEVs cost-competitive with comparable ICE vehicles for some duty cycles. Hydrogen infrastructure is expected to need the additional time prior to MY 2030 to further develop, as discussed in greater detail in DRIA Chapter 1.8,[407 408] but we expect the

[389] Heavy-duty vehicles are typically powered by a diesel-fueled compression-ignition (CI) engine, though the heavy-duty market includes vehicles powered by gasoline-fueled spark-ignition (SI) engines and alternative-fueled ICEs. We selected diesel-powered ICE vehicles as the baseline vehicle for the assessment in HD TRUCS in our analysis because a diesel-fueled CI engine is broadly available for all of the 101 vehicle types.

[390] Smith, David et. al. ''Medium- and Heavy-Duty Vehicle Electrification: An Assessment of Technology and Knowledge Gaps''. U.S. Department of Energy: Oak Ridge National Laboratory and National Renewable Energy Laboratory. December 2019. Available online: *https://info.ornl.gov/sites/publications/Files/Pub136575.pdf.*

[391] This does not necessarily mean that a BEV with a large battery weight and volume would not be technically feasible for a given HD vehicle use, but rather this is an acknowledgement that we considered impacts of increased battery size on feasibility considerations like payload capacity as well as cost and payback within the selection of HD vehicle technologies for the technology packages.

[392] Ledna et. al. ''Decarbonizing Medium- & Heavy-Duty On-Road Vehicles: Zero-Emission Vehicles Cost Analysis''. U.S. Department of Energy, National Renewable Energy Laboratory. March 2022. Available online: *https://www.nrel.gov/docs/fy22osti/82081.pdf.*

[393] Hall, Dale and Nic Lutsey. ''Estimating the Infrastructure Needs and Costs for the Launch of Zero-Emission Trucks''. White Paper: The International Council on Clean Transportation. August 2019. Available online: *https://theicct.org/wp-content/uploads/2021/06/ICCT_EV_HDVs_Infrastructure_20190809.pdf.*

[394] Robo, Ellen and Dave Seamonds. Technical Memo to Environmental Defense Fund: Investment Reduction Act Supplemental Assessment: Analysis of Alternative Medium- and Heavy-Duty Zero-Emission Vehicle Business-As-Usual Scenarios. ERM. August 19, 2022. Available online: *https://www.erm.com/contentassets/154d08e0d0674752925cd82c66b3e2b1/edf-zev-baseline-technical-memo-addendum.pdf.*

[395] A technology is more energy efficient if it uses less energy to do the same amount of work. Energy can be lost as it moves through the vehicle's components due to heat and friction.

[396] Cunanan, Carlo et. al. ''A Review of Heavy-Duty Vehicle Powertrain Technologies: Diesel Engine Vehicles, Battery Electric Vehicles, and Hydrogen Fuel Cell Electric Vehicles''. Clean Technol. Available online: *https://www.mdpi.com/2571-8797/3/2/28.*

[397] Mihelic, Rick et. al. ''Making Sense of Heavy-Duty Hydrogen Fuel Cell Tractors''. North American Council for Freight Efficiency. December 16, 2020. Available online: *https://nacfe.org/research/electric-trucks/making-sense-of-heavy-duty-hydrogen-fuel-cell-tractors/.*

[398] Cunanan, Carlo et. al. ''A Review of Heavy-Duty Vehicle Powertrain Technologies: Diesel Engine Vehicles, Battery Electric Vehicles, and Hydrogen Fuel Cell Electric Vehicles''. *Clean Technol.* Available online: *https://www.mdpi.com/2571-8797/3/2/28.*

[399] Cullen et. al. ''New roads and challenges for fuel cells in heavy-duty transportation.'' Nature Energy. March 25, 2021. Available online: *https://www.nature.com/articles/s41560-021-00775-z.*

[400] For example, California's Advanced Clean Fleets Regulation requires that 10 percent of sleeper cab tractors and specialty vehicles must be zero-emission by 2030. We note that although our technology package consider FCEVs for specific HD applications, a diverse range of technologies may be used to comply with the proposed performance-based standards.

[401] California Air Resources Board. ''Advanced Clean Fleets Regulation Summary''. October 27, 2022. Available online: *https://ww2.arb.ca.gov/resources/fact-sheets/advanced-clean-fleets-regulation-summary* (ACF 2030 goals).

[402] Adler, Alan. ''Hyundai's Xcient positioned for instant US fuel cell truck leadership''. *FreightWaves.* November 29, 2022. Available online: *https://www.freightwaves.com/news/hyundais-xcient-positioned-for-instant-us-fuel-cell-truck-leadership.*

[403] GNA. ''State of Sustainable Fleet: 2022 Market Brief—Fuel Cell Electric Miniguide''. 2022. Available online: *https://www.stateofsustainablefleets.com/.*

[404] U.S. Energy Information Administration. ''Hydrogen explained: Use of hydrogen''. Last updated January 20, 2022. Available online: *https://www.eia.gov/energyexplained/hydrogen/use-of-hydrogen.php.*

[405] Toyota. ''Toyota, Kenworth Prove Fuel Cell Electric Truck Capabilities with Successful Completion of Truck Operations for ZANZEFF Project''. September 22, 2022. Available online: *https://pressroom.toyota.com/toyota-kenworth-prove-fuel-cell-electric-truck-capabilities-with-successful-completion-of-truck-operations-for-zanzeff-project/.*

[406] Marcinkoski, Jason et. al. ''DOE Advanced Truck Technologies: Subsection of the Electrified Powertrain Roadmap—Technical Targets for Hydrogen-Fueled Long-Haul Tractor-Trailer Trucks. October 31, 2019. Available online: *https://www.hydrogen.energy.gov/pdfs/19006_hydrogen_class8_long_haul_truck_targets.pdf.*

[407] U.S. Department of Energy. ''Pathways to Commercial Liftoff: Clean Hydrogen''. March 2023.

Continued

refueling needs can be met by MY 2030.[409] We also recognize that regulations, like this proposed rule, can further incentivize technology and refueling infrastructure development and deployment. Therefore, we included FCEVs in our technology assessment beginning in MY 2030, which is our best projection after considering the IRA incentives related to hydrogen as a transportation fuel and FCEVs, DOE's hydrogen assessments, and other information discussed here in Section II and in DRIA Chapter 1.

After considering operational characteristics and costs in 2021 dollars, we determined the payback period, which is the number of years it would take to offset any incremental cost increase of a ZEV over a comparable ICE vehicle. Lastly, technology adoption rates for BEVs or FCEVs for the technology packages were selected based on the payback period. We request comment on this approach and any supporting data on the potential for these and additional technologies to be available in the HD market in the MY 2027 through MY 2032 timeframe.

5. EPA's HD TRUCS Analysis Tool

For this proposal, EPA developed an analysis tool, HD TRUCS, to evaluate the design features needed to meet the energy and power demands of various HD vehicle types when using ZEV technologies. The overarching design and functionality of HD TRUCS is premised on ensuring each of the 101 ZEV types could perform the same work as its ICE counterpart. We did this by sizing the BEV and FCEV components such that they could meet the driving demands based on the 90th percentile daily VMT for each application, while also accounting for the HVAC and battery thermal conditioning load requirements in hot and cold weather and any PTO demands for the vehicle. Furthermore, we accounted for the fact that the usable battery capacity is less than 100 percent and that batteries deteriorate over time. We also sized the ZEV powertrains to ensure that the vehicles would meet an acceptable level of acceleration from a stop and be able to maintain a cruise speed while going up a hill at six-percent grade. In this subsection, we discuss the primary inputs used in HD TRUCS. Additional details on HD TRUCS can be found in DRIA Chapter 2. We welcome comment on all aspects of HD TRUCS.

i. Vehicles Analyzed

We developed inputs for 101 different vehicle types for our assessment in HD TRUCS. This encompasses 22 different applications in the HD vehicle market, as shown in Table II–3. These vehicles applications are further differentiated by weight class, duty cycle, and daily vehicle miles traveled (VMT) for each of these vehicle applications into 101 vehicle types. These 101 vehicle types cover all 33 of the heavy-duty regulatory subcategories, as shown in DRIA Chapter 2.8.3.1. The initial list of HD TRUCS vehicles contained 87 vehicle types and was based on work the Truck and Engine Manufacturers Association (EMA) and California Air Resources Board (CARB) conducted for CARB's ACT rule.[410] We consolidated the list; eliminated some of the more unique vehicles with small populations like mobile laboratories; and assigned operational characteristics that correspond to the Urban, Multi-Purpose, and Regional duty cycles used in GEM. We also added additional vehicle types to reflect vehicle applications that were represented in EPA's certification data. Chapter 2.1 of the DRIA summarizes the 101 unique vehicle types represented in HD TRUCS and how they are categorized, each with a vehicle identifier, vehicle application, vehicle weight class, MOtor Vehicle Emission Simulator (MOVES) SourceTypeID and RegClassID,[411] and GEM duty cycle category. We request comment on our approach, including our categorization of vehicle types and applications in the data, and whether there are additional specific vehicle types we should include in our assessment.

TABLE II–3—HD VEHICLE APPLICATIONS INCLUDED IN HD TRUCS

Ambulance.
Box Truck.
Cement Mixer.
Coach Bus.
Dump Truck.
Fire Truck.
Flatbed/Stake Truck.
Port Drayage Tracto.
Refuse Truck.
RV.
School Bus.
Shuttle bus.
Snow Plow.
Step Van.
Street Sweeper.
Tanker Truck.
Tow Truck.
Tractor, Day Cab.
Tractor, Sleeper Cab.
Transit Bus.
Utility Truck.
Yard Tractor.

Heavy-duty vehicles are typically powered by a diesel-fueled compression-ignition (CI) engine, though the heavy-duty market also includes vehicles powered by gasoline-fueled spark-ignition (SI) engines and alternative-fueled ICE. We selected diesel-powered ICE vehicles as the baseline vehicle for the assessment in HD TRUCS in our analysis because a diesel-fueled CI engine is broadly available for all of the 101 vehicle types and are more efficient than SI engines. Chapter 2.2 of the DRIA includes the details we developed for each of the baseline vehicles, including the size of the engine and the transmission type. This information was used to determine the weight and the cost of the ICE powertrains.

In the analysis, for MYs 2027 through 2029, we focused primarily on BEV technology. Starting in MY 2030, we also considered FCEV technology for select applications that travel longer distances and/or carry heavier loads. This included coach buses, heavy-haul tractors, sleeper cab tractors, and day cab tractors that are designed to travel longer distances. We request comment on our approach that focuses primarily on BEVs, which currently are more prevalent in the HD vehicle market, and whether there are additional vehicle types that should be evaluated as FCEVs along with BEVs.

ii. Vehicle Energy Demand

Vehicles require energy to perform the work required of the vehicle. This work includes driving, idling, and providing heating and cooling; in addition, some vehicles require energy to operate equipment. Vehicles with regenerative braking systems have the opportunity to recover some of the kinetic energy that would otherwise be lost during braking. There are a wide variety of energy demands across the heavy-duty sector, depending on the vehicle's application. For example, some vehicles, such as long-haul tractors, spend the vast

Available online: *https://liftoff.energy.gov/wp-content/uploads/2023/03/20230320-Liftoff-Clean-H2-vPUB.pdf.*

[408] The proposed rule projects that hydrogen consumption from FCEVs will be a small proportion of total low-GHG hydrogen production expected in 2030: from 1.3% in 2030 to 8.3% in 2032.

[409] U.S. Department of Energy. ''DOE National Clean Hydrogen Strategy and Roadmap''. Draft September 2022. Available online: *https://www.hydrogen.energy.gov/pdfs/clean-hydrogen-strategy-roadmap.pdf.*

[410] California Air Resources Board, Appendix E: Zero Emission Truck Market Assessment (2019), *available at https://ww2.arb.ca.gov/sites/default/files/barcu/regact/2019/act2019/appe.pdf* (last accessed on Sept. 26, 2022).

[411] MOVES homepage: *https://www.epa.gov/moves* (last accessed October 2022).

majority of the time driving, a fraction of the time idling, and require heating and cooling of the cabin, but do not require operation of additional equipment. A transit bus typically operates at low speeds, so it requires less energy for driving than a long-haul tractor, but requires more energy for heating or cooling due to its large amount of interior cabin volume. Unlike ICE vehicles where the cabin heating is often provided by excess heat from the main ICE, BEVs do not have excess heat from an ICE to utilize in this manner and thus require more energy than ICE vehicles to heat the cabin and additional energy to manage the temperature of the batteries. As another example of the wide variety of energy demands for HD vehicles, a utility truck, also known as a bucket truck, may only drive a few miles to a worksite while idling for the majority of the day and using energy to move the bucket up and down. The power to run the separate equipment on ICE vehicles is typically provided by a PTO from the main engine. In HD TRUCS, we determined the daily energy demand for each of the 101 vehicle types by estimating both the baseline energy demands that are similar regardless of the powertrain configuration and the energy demands that vary by powertrain. The baseline energy includes energy at the axle to move the vehicle, energy recovered from regenerative braking energy, and PTO energy. Powertrain-specific energy includes energy required to condition the battery and heat or cool the cabin using a heating, ventilation, and air conditioning (HVAC) system. We discuss each of these in the following subsections.

a. Baseline Energy

The amount of energy needed at the axle to move the vehicle down the road is determined by a combination of the type of drive cycle (such as urban or freeway driving) and the number of miles traveled over a period of time. For each HD TRUCS vehicle type, we determined the baseline energy consumption requirement that would be needed for each of the ZEV applications. To do this, we used the drive cycles and cycle weightings adopted for HD GHG Phase 2 for our assessment of the energy required per mile for each vehicle type. EPA's GEM model simulates road load power requirements for various duty cycles to estimate the energy required per mile for HD vehicles. To understand the existing heavy-duty industry, we performed an analysis on current heavy-duty vehicles in the market in order to determine typical power requirements and rates of energy consumption at the axle. These values represent the energy required to propel a vehicle of a given weight, frontal area, and tire rolling resistance to complete the specified duty cycle on a per-mile basis, independent of the powertrain. In DRIA Chapter 2.2.2, we describe the GEM inputs and results used to estimate the propulsion energy and power requirements at the axle for ICE vehicles on a per-mile basis. We also used these inputs, along with some simple electric vehicle assumptions, to develop a model for electric vehicles to calculate weighted percent of energy recovery due to regenerative braking. Additional detail can be found in DRIA Chapter 2.2.2.1.3. We request comment on our approach, including other data we should consider in our assessment of energy consumption.

Some vocational vehicles have attachments that perform work, typically by powering a hydraulic pump, which are powered by PTOs. Information on in-use PTO energy demand cycles is limited. NREL published two papers describing investigative work into PTO usage and fuel consumption.[412] [413] These studies, however, were limited to electric utility vehicles, such as bucket trucks and material handlers. To account for PTO usage in HD TRUCS, we chose to rely on a table described in California's Diesel Tax Fuel Regulations, specifically in Regulation 1432, ''Other Nontaxable Uses of Diesel Fuel in a Motor Vehicle,'' [414] that covers a wider range of vehicles beyond the electric utility vehicles in the referenced NREL studies. This table contains ''safe-harbor'' percentages that are presumed amounts of diesel fuel used for ''auxiliary equipment'' operated from the same fuel tank as the motor vehicle. We used this source to estimate PTO energy use as a function of total fuel consumed by vehicle type, as discussed in DRIA Chapter 2.2.2.1.4. We request additional data that could be considered in our assessment of PTO loads in our final rulemaking assessment.

Within HD TRUCS, we calculated the total energy needed daily based on a daily VMT for each vehicle type. We used multiple sources to develop the VMT for each vehicle. Daily VMT for each vehicle came from one of five **Sources:** the NREL FleetDNA database, a University of California-Riverside (UCR) database, the 2002 Vehicle Inventory and Use Survey (VIUS), the CARB Large Entity Report, or an independent source specific to an application, as discussed in DRIA Chapter 2.2.1.2.[415] Each vehicle type was assigned a 50th percentile or average daily VMT [416] that was used to estimate operational costs, such as average annual fuel, hydrogen, or electricity costs, and maintenance and repair costs (see DRIA Chapters 2.3.4, 2.4.4, and 2.5.3). We also account for the change in use of the vehicle over the course of its ownership and operation in HD TRUCS by applying a MOVES-based VMT ratio based on vehicle age to the 50th percentile VMT to arrive at a 10 year average VMT, as described in more detail in DRIA Chapter 2.2.1.2.2. We also developed a 90th percentile daily VMT and used it in HD TRUCS to size ZEV components, such as batteries, and estimate the size requirements for EVSE. We selected the 90th percentile daily VMT data because we project that manufacturers will design their BEVs to meet most daily VMT needs, but not the most extreme operations. BEVs designed for all daily VMT needs would be unnecessarily heavy and expensive for most operations, which would limit their appeal in the broad market. Please see DRIA Chapter 2.2.1.2 for the complete list of VMT for each of the 101 vehicle types. We request comment, including comment with data, on our VMT assessments.

b. Powertrain-Specific Energy

Heating, ventilation, and air conditioning (HVAC) requirements vary by vehicle type, location, and duty cycle. The HVAC energy required to heat and cool interior cabins is considered separately from the baseline energy in HD TRUCS, since these energy loads are not required year-round or in

[412] NREL, Characterization of PTO and Idle Behavior for Utility Vehicles, Sept 2017. Available online: *https://www.nrel.gov/docs/fy17osti/66747.pdf.*

[413] NREL, Fuel and Emissions Reduction in Electric Power Take-Off Equipped Utility Vehicles, June 2016. Available online: *https://www.nrel.gov/docs/fy17osti/66737.pdf.*

[414] *See* Cal. Code Regs. tit. 18, § 1432, ''Other Nontaxable Uses of Diesel Fuel in a Motor Vehicle,'' *available at https://www.cdtfa.ca.gov/lawguides/vol3/dftr/dftr-reg1432.html.*

[415] NREL and EPA. Heavy-Duty Vehicle Activity for EPA MOVES. Available at *https://data.nrel.gov/submissions/168,* last accessed on October 15, 2022, which includes an assessment of both the NREL and UC-Riverside databases; U.S. Census Bureau. 2002 Vehicle Inventory and Use Survey. *https://www.census.gov/library/publications/2002/econ/census/vehicle-inventory-and-use-survey.html,* last accessed on October 15, 2022. CARB. Large Entity Reporting. Available at *https://ww2.arb.ca.gov/our-work/programs/advanced-clean-trucks/large-entity-reporting.*

[416] We used the 50th percentile as a proxy for average VMT from the NREL FleetDNA database and the UC-Riverside database. The NREL and UC-Riverside databases each contained a selection of vehicles that we used to calculate 50th and 90th percentile daily VMT. When each database had a VMT value, the values were averaged to get VMT for a specific market segment. See DRIA Chapter 2.2.1.2 for further details.

all regions of the country. Nearly all commercial vehicles are equipped with heat and basic ventilation and most vehicles are equipped with air conditioning (A/C). In ICE vehicles, traditional cabin heating uses excess thermal energy produced by the main ICE. This is the only source of cabin heating for many vehicle types. Additionally, on ICE vehicles, cabin A/C uses a mechanical refrigerant compressor that is engine belt-driven.

For BEVs, the energy required for thermal management is different than for ICE vehicles. First, the loads for HVAC are different because the vehicle is not able to be heated from excess heat from the engine. In this analysis, we project HD BEVs would be equipped with either a positive temperature coefficient (PTC) electric resistance heater with traditional A/C, or a full heat pump system, as described in DRIA Chapter 1. The vehicle's battery is used to power either system, but heat pumps are many times more efficient than PTC heaters. Given the success and increasing adoption of heat pumps in light-duty EVs, we believe that heat pumps will be the more commonly used technology and thus assume the use of heat pumps in HD TRUCS.

To estimate HVAC energy consumption of BEVs in HD TRUCS, we performed a literature and market review. Even though there are limited real-world studies, we agreed with the HVAC modeling-based approach described in Basma et. al.[417] This physics-based cabin thermal model considers four vehicle characteristics: the cabin interior, walls, materials, and number of passengers. The authors modeled a Class 8 electric transit bus with an HVAC system consisting of two 20-kW reversible heat pumps, an air circulation system, and a battery thermal management system. We used their estimated HVAC power demand values as a function of temperature, resembling a parabolic curve, where hotter and colder temperatures require more power with the lowest power demand between 59 to 77 °F.

The power required for HVAC in HD TRUCS is based on a Basma et. al study that determined the HVAC power demand across a range of ambient temperatures.[418] We created three separate ambient temperature bins: one for heating (less than 55 °F), one for cooling (greater than 80 °F), and one for a temperature range that requires only ventilation (55–80 °F). In HD TRUCS, we already accounted for the energy loads due to ventilation in the axle loads, so no additional energy consumption is applied here for the ventilation-only operation. We then weighted the power demands by the percent HD VMT traveled at a specific temperature range. The results of the VMT-weighted HVAC power demand for a Class 8 Transit Bus are shown in Table II–4. We request comment on and data to support other approaches to quantify the HVAC energy demand in BEVs, including the ambient temperature ranges where heating and cooling are utilized.

TABLE II–4—HD TRUCS VMT-WEIGHTED HVAC POWER DEMAND OF A CLASS 8 TRANSIT BUS

	Temperature (°F)	Consumption (kW)
Heating	<55	5.06
Ventilation	55–80	0.00
Cooling	>80	3.32

Lastly, HVAC load is dependent on cabin size—the larger the size of the cabin, the greater the HVAC demand. The values for HVAC power demand shown in Table II–4 represent the power demand to heat or cool the interior of a Class 8 Transit bus. However, HD vehicles have a range of cabin sizes; therefore, we developed scaling ratios relative to the cabin size of a Class 8 bus. Each vehicle's scaling factor is based on the surface area of the vehicle compared to the surface area of the Class 8 bus. For example, a Class 4–5 shuttle bus has a cabin size ratio of 0.6, in this case, the heating demand for the vehicle will be 3.04 kW and the cooling demand would be 1.99 kW. The adjustment ratio for buses and ambulances are between 0.3–0.6, while the cabin size for remaining HDVs have a similar cabin to a mid-size light duty vehicle and therefore, a single average scaling factor of 0.2 was applied to all remaining vehicle types.[419] We welcome data to support these or other cabin size scaling factors.

Fuel cell stacks produce excess heat during the conversion of hydrogen to electricity, similar to an ICE during combustion. This excess heat can be used to heat the interior cabin of the vehicle. In HD TRUCS, we already accounted for the energy loads due to ventilation in the axle loads, so no additional energy consumption is applied to FCEV for heating operation. Therefore, for FCEV energy consumption in HD TRUCS, we only include additional energy requirements for air conditioning (*i.e.* not for heating).[420] As described in DRIA Chapter 2.4.1.1.1, we assigned a power demand of 3.32 kW for powering the air conditioner on a Class 8 bus. The A/C loads are then scaled by the cabin volume for other vehicle applications in HD TRUCS and applied to the VMT fraction that requires cooling, just as we did for BEVs.

BEVs have thermal management systems to maintain battery core temperatures within an optimal range of approximately 68 to 95 degrees Fahrenheit (F).[421] In HD TRUCS, we accounted for the battery thermal management energy demands as a function of ambient temperature based on a Basma et. al study.[422] As described in DRIA Chapter 2.4.1.1.3, we determined the amount of energy consumed to heat the battery with cabin air when it is cold outside (less than 55 °F) and energy consumed to cool the battery when it is hot outside (greater than 80 °F) with refrigerant cooling. For the ambient temperatures between these two regimes, we agreed with Basma, et. al that only ambient air cooling is required for the batteries, which requires no additional load. We first determined a single VMT-weighted power consumption value for battery heating and a value for battery cooling based on the MOVES HD VMT distribution, based on the same method used for HVAC. Then, we determined the energy required for battery conditioning required for eight hours of daily operation and expressed it in terms of percent of total battery size. Table II–5 shows the energy consumption for battery conditioning for both hot and cold ambient temperatures, expressed as a percentage of battery capacity, used in HD TRUCS. We request additional data on the battery thermal management loads for HD BEVs.

[417] Basma, Hussein, Charbel Mansour, Marc Haddad, Maroun Nemer, Pascal Stabat. ''Comprehensive energy modeling methodology for battery electric buses''. Energy: Volume 207, 15 September 2020, 118241. Available online: *https://www.sciencedirect.com/science/article/pii/S0360544220313487*.

[418] It should be noted that Basma model has discrete values in Celsius and MOVES data has discrete values in Fahrenheit. The Basma discrete values in the Basma model is fitted to a parabolic curve and converted into Fahrenheit to best fit the VMT distribution that is available in MOVES.

[419] The interior cabin where the driver and passengers sit are heated while where the cargo is stored is not heated.

[420] FCEVs use waste heat from the fuel cell for heating, and that ventilation operates the same as it does for an ICE vehicle.

[421] Basma, Hussein, Charbel Mansour, Marc Haddad, Maroun Nemer, Pascal Stabat. ''Comprehensive energy modeling methodology for battery electric buses''. Energy: Volume 207, 15 September 2020, 118241. Available online: *https://www.sciencedirect.com/science/article/pii/S0360544220313487*.

[422] Ibid.

TABLE II–5—BATTERY CONDITIONING ENERGY CONSUMPTION

	Ambient temperature (°F)	Energy consumption (%)
Battery Heating	<55	1.9
Battery Cooling	>80	4.2

iii. BEV Component Sizing and Weight

We used HD TRUCS to determine the size of two of the major components in a BEV—the battery and the motor. The size of these components is determined by the energy needs of the specific vehicle to meet its daily operating requirements. In this subsection, we also discuss our method to evaluate the payload and packaging impact of the battery.

a. Battery

First, in HD TRUCS, we based the size of the battery on the daily demands on the vehicle to perform a day's work, based on the 90th percentile VMT (sizing VMT). As described in the Vehicle Energy Demand subsection, this daily energy consumption is a function of miles the vehicle is driven and the energy it consumes because of: (1) moving the vehicle per unit mile, including the impact of regenerative braking, and PTO energy requirements and (2) battery conditioning and HVAC energy requirements. Then we also accounted for the battery efficiency, depth of discharge, and deterioration in sizing of the batteries for BEVs in HD TRUCS.

The daily energy consumption of each BEV in HD TRUCS is determined by applying efficiency losses to energy consumption at the axle, as described in DRIA Chapter 2.4.1.1.3. We have accounted for these losses in the battery, inverter, and e-motor before the remaining energy arrives at the axle, as shown in Table II–6. We request comment, including data, on our approach and the results for our assessment of system efficiencies for HD BEV components.

TABLE II–6—BEV COMPONENT EFFICIENCIES USED IN HD TRUCS

Component	MY 2027 (%)	MY 2028 (%)	MY 2029 (%)	MY 2030 (%)	MY 2031 (%)	MY 2032 (%)
Battery	95	95	95	95	95	95
Inverter	97.0	97.0	97.0	97.5	97.5	97.5
E-Motor	94.5	94.5	94.5	95.0	95.0	95.0
Total System Efficiency	*87*	*87*	*87*	*88*	*88*	*88*

Next, we oversized the battery to account separately for the typical usable amount of battery and for battery deterioration over time. We sized the battery limiting the battery to a maximum depth of discharge of 80 percent, recognizing that manufacturers and users likely would not allow the battery capacity to be depleted beyond 80 percent of original capacity. We also accounted for deterioration of the battery capacity over time by oversizing the battery by 20 percent, assuming only 80 percent of the battery storage is available throughout its life. Therefore, the battery sizes we used in our assessment are conservative because they could meet 100 percent of the daily operating requirement using the 90th percentile VMT at the battery end of life. This is described in greater detail in DRIA Chapter 2.4.1.1 and 2.7.5.4. We request comment on approach and results for the useable battery range and battery deterioration for HD BEVs that we could consider for our final rule analysis.

b. Motor

We determined the size of the motor for each BEV based on the peak power of the transient cycle and highway cruise cycles, the vehicle's ability to meet minimum performance targets in terms of acceleration rate of the vehicle, and the ability of the vehicle to maintain speed going up a hill. As described in DRIA Chapter 2.4.1.2, we estimated a BEV motor's peak power needs to size the e-motor, after considering the peak power required during the ARB transient cycle [423] and performance targets included in ANL's Autonomie model [424] and in Islam et al.,[425] as indicated in Table II–7. We assigned the target maximum time to accelerate a vehicle from stop to 30 mph and 60 mph based on weight class of each vehicle. We also used the criteria that the vehicle must be able to maintain a specified cruise speed while traveling up a road with a 6 percent grade, as shown in Table II–7. In the case of cruising at 6 percent grade, the road load calculation is set at a constant speed for each weight class bin on a hill with a 6 percent incline. We determined the required power rating of the motor as the greatest power required to drive the vehicle over the ARB transient test cycle, at 55 mph and 65 mph constant cruise speeds, or at constant speed at 6 percent grade, and then applied losses from the e-motor. We request comment on our approach using these performance targets.

TABLE II–7—ANL PERFORMANCE TARGETS

	Vocational				Tractors	
Weight Class Bin	2b–3	4–5	6–7	8	7	8
0–30 mph Time (s)	7	8	16	20	18	20
0–60 mph Time (s)	25	25	50	100	60	100

[423] EPA uses three representative duty cycles for calculating CO_2 emissions in GEM: transient cycle and two highway cruise cycles. The transient duty cycle was developed by the California Air Resources Board (CARB) and includes no grade—just stops and starts. The highway cruise duty cycles represent 55-mph and 65-mph vehicle speeds on a representative highway. They use the same road load profile but at different vehicle speeds, along with a percent grade ranging from −5 percent to 5 percent.

[424] Islam, Ehsan Sabri. Ram Vijayagopal, Ayman Moawad, Namdoo Kim, Benjamin Dupont, Daniela Nieto Prada, Aymeric Rousseau, ''A Detailed Vehicle Modeling & Simulation Study Quantifying Energy Consumption and Cost Reduction of Advanced Vehicle Technologies Through 2050,'' *Report to the U.S. Department of Energy, Contract ANL/ESD–21/10,* October 2021. See previous reports and analysis: 2021. Available online: *https://vms.taps.anl.gov/research-highlights/u-s-doe-vto-hfto-r-d-benefits/.*

[425] Islam, Ehsan Sabri, Ram Vijayagopal, Aymeric Rousseau. ''A Comprehensive Simulation Study to Evaluate Future Vehicle Energy and Cost Reduction Potential'', Report to the U.S. Department of Energy, Contract ANL/ESD–22/6, October 2022. Available online: *https://vms.taps.anl.gov/research-highlights/u-s-doe-vto-hfto-r-d-benefits/.*

TABLE II–7—ANL PERFORMANCE TARGETS—Continued

Cruise Speed (mph) @ 6% grade	65	55	45	25	30	30

c. Battery Weight and Volume

Performance needs of a BEV can result in a battery that is so large or heavy that it impacts payload and, thus, potential work accomplished relative to a comparable ICE vehicle. We determined the battery weight and physical volume for each vehicle application in HD TRUCS using the specific energy and energy density of the battery for each battery capacity. As described in DRIA Chapter 2.4.2, to determine the weight impact, we used battery specific energy, which measures battery energy per unit of mass. While battery technologies have made tremendous advancements in recent years, it is well known that current automotive batteries add mass to the vehicle. Our values for the specific energy of battery packs with lithium-ion cell chemistries are based on Autonomie.[426] The values we used in HD TRUCS are shown in Table II–8.

TABLE II–8—BATTERY PACK-LEVEL SPECIFIC ENERGY IN HD TRUCS (WH/KG)

Model year	2027	2028	2029	2030	2031	2032
Specific Energy (Wh/kg)	199	203	208	213	218	223

To evaluate battery volume and determine the packaging space required for each HD vehicle type, we used battery energy density. We also estimated the battery's width using the wheelbase and frame depths.

Battery energy density (also referred to as volumetric energy density) measures battery energy per unit of volume. This value was not available as a part of the Autonomie; however, the overall trend of energy density shows a linear correlation with specific energy. In this analysis, we determined the energy density is 2.5 times that of specific energy, as shown in Table II–9.

TABLE II–9—BATTERY PACK LEVEL ENERGY DENSITY IN HD TRUCS (WH/L)

Model year	2027	2028	2029	2030	2031	2032
Specific Energy (Wh/L)	496	508	521	533	545	557

We request comment on our approach and results as well as comment and data on current and projected levels of battery-specific energy and battery-specific density values for HD vehicles.

Heavy-duty vehicles are used to perform work, such as moving cargo or carrying passengers. Consequently, heavy-duty vehicles are sensitive to increases in vehicle weight and carrying volume. To take this into account, we also evaluated BEVs in terms of the overall impact on payload-carrying ability and battery packaging space. The results of this analysis can be found in DRIA Chapters 2.4.2 and 2.8.1. We found that the extra weight of the batteries for applications such as coach buses and tractors that travel long distances could have an impact on operations of these vehicles as BEVs. Therefore, for applications where our analysis showed that BEVs impacted the payload capacity by over 30 percent, we assessed fuel cell technology. In this proposal we are using a single technology package that supports the feasibility of the proposed standards, but we recognize the potential of BEVs in the applications where we evaluate FCEVs, as demonstrated by the development of a long-haul battery electric tractor by Tesla.

iv. Charging Infrastructure for BEVs

Charging infrastructure represents a key element required for HD BEV operation. More charging infrastructure will be needed to support the growing fleet of HD BEVs. This will likely consist of a combination of (1) depot charging—with infrastructure installed in parking depots, warehouses, and other private locations where vehicles are parked off-shift (when not in use), and (2) en-route charging, which provides additional electricity for vehicles during their operating hours.

In draft RIA Chapters 2.6 and 2.7.7 we describe how we accounted for charging infrastructure in our analysis of HD BEV technology feasibility and adoption rates for MYs 2027–2032. For this analysis, we estimate infrastructure costs associated with depot charging to fulfill each BEV's daily charging needs off-shift with the appropriately sized electrical vehicle supply equipment.[427] This approach reflects our expectation that many heavy-duty BEV owners will opt to purchase and install EVSE at depots; accordingly, we explicitly account for all of these upfront costs in our analysis. By contrast, we do not estimate upfront hardware and installation costs for public and other en-route electric charging infrastructure because the BEV charging needs are met with depot charging in our analysis. Discussion of private sector infrastructure investments and charging deployment projects is included in DRIA Chapter 1.6.2. We request comment on this analytical approach.

Vehicle owners with return-to-base operations who choose to install depot charging equipment have many options from which to select. This includes AC

[426] Islam, Ehsan Sabri. Ram Vijayagopal, Ayman Moawad, Namdoo Kim, Benjamin Dupont, Daniela Nieto Prada, Aymeric Rousseau, ''A Detailed Vehicle Modeling & Simulation Study Quantifying Energy Consumption and Cost Reduction of Advanced Vehicle Technologies Through 2050,'' *Report to the U.S. Department of Energy, Contract ANL/ESD–21/10,* October 2021. See previous reports and analysis: 2021. Available online: *https://vms.taps.anl.gov/research-highlights/u-s-doe-vto-hfto-r-d-benefits/.*

[427] We sized EVSE to meet vehicles' daily electricity consumption (kWh/day) based on the 90th percentile VMT.

or DC charging, power level, as well as the number of ports and connectors per charging unit, connector type(s), communications protocols, and additional features such as vehicle-to-grid capability (which allows the vehicle to supply energy back to the grid). Many of these selections will impact EVSE hardware and installation costs, with power level as one of the most significant drivers of cost. While specific cost estimates vary across the literature, higher-power charging equipment is typically more expensive than lower-power units. For this reason, we have chosen to evaluate infrastructure costs separately for four different, common charging types in our depot charging analysis: AC Level 2 (19.2 kW) and 50 kW, 150 kW, and 350 kW DC fast charging (DCFC).

How long a vehicle is off-shift and parked at a depot, warehouse, or other home base each day is a key factor for determining which charging type(s) could meet its needs. The amount of time available at the depot for charging (dwell time) will depend on a vehicle's duty cycle. For example, a school bus or refuse truck may be parked at a depot in the afternoon and remain there until the following morning whereas a transit bus may continue to operate throughout the evening. Even for a specific vehicle, off-shift dwell times may vary between weekends and weekdays, by season, or due to other factors that impact its operation. The 101 vehicle types in our analysis span a wide range of vehicle applications and duty cycles, and we expect their off-shift dwell times at depots to vary accordingly. As described in DRIA Chapter 2.6.4.1, in order to better understand what an average depot dwell time might look like, we examined a dataset with engine start and off times for 564 commercial vehicles. We used the longest time the vehicle engine was off each day as a rough proxy for depot dwell time, finding the average across all 564 vehicles to be over 14 hours, with proxy dwell times for most of the seven vehicle categories examined rounding to 12 hours or longer. However, assigning specific dwell times for each of the 101 vehicle types in our analysis is challenging due a lack of comprehensive datasets on parking times and locations, and, as further detailed in DRIA Chapter 2.6.4.1, we acknowledge limitations in the approach and dataset we examined. Given these uncertainties, we used an off-shift dwell time for all vehicle types of 12 hours for the purpose of selecting charging equipment at depots in our analysis.

v. FCEV Component Sizing

To compare diesel-fueled HD ICE vehicles and HD FCEV technology costs and performance in HD TRUCS, this section explains how we define HD FCEVs based on the performance and use criteria in DRIA Chapter 2.2 (that we also used for HD BEVs, as explained in Section D.5.ii). We determined the e-motor, fuel cell stack, and battery pack sizes to meet the power requirements for each of the eight FCEVs represented in HD TRUCS. We also estimated the size of the onboard fuel tank needed to store the energy, in the form of hydrogen, required to meet typical range and duty cycle needs. See DRIA Chapter 2.5 for further details. We request comment, including data, on our approach and results from our assessment of HD FCEV component sizing.

a. E-Motor

As discussed in DRIA Chapter 2.4.1.2, the electric motor (e-motor) is part of the electric drive system that converts the electric power from the battery or fuel cell into mechanical power to move the wheels of the vehicle. In HD TRUCS, the e-motor was sized for a FCEV like it was sized for a BEV—to meet peak power needs of a vehicle, which is the maximum power to drive the ARB transient cycle, meet the maximum time to accelerate from 0 to 30 mph, meet the maximum time to accelerate from 0 to 60 mph, and maintain a set speed up a six-percent grade. Additional power was added to account for e-motor efficiency losses using the same e-motor efficiency losses calculated and applied for BEVs, as discussed in DRIA Chapter 2.4.1.1.3.

b. Fuel Cell Stack

Vehicle power in a FCEV comes from a combination of the fuel cell (FC) stack and the battery pack. The FC stack behaves like the internal combustion engine of a hybrid vehicle, converting chemical energy stored in the hydrogen fuel into useful work. The battery is charged by power derived from regenerative braking, as well as excess power from the FC stack. Some FCEVs are designed to primarily rely on the fuel cell stack to produce the necessary power, with the battery exclusively used to capture energy from regenerative braking. Other FCEVs are designed to store more energy in a battery to meet demand during situations of high-power need.[428] [429]

While much of FCEV design is dependent on the use case of the vehicle, manufacturers also balance the cost of components such as the FC stack, the battery, and the hydrogen fuel storage tanks. For the purposes of this HD TRUCS analysis, we focused on proton-exchange membrane (PEM) fuel cells that use energy battery cells, where the fuel cell and the battery were sized based on the demands of the vehicle. In HD TRUCS, the fuel cell stack was sized either to reach the 90th percentile of power required for driving the ARB transient cycle or to maintain a constant highway speed of 75 mph. The 90th percentile power requirement was used to size the fuel cells of vocational vehicles. For sleeper and day cabs, the fuel cell was sized using the power required to drive at 75 mph with 80,000-pound gross combined vehicle weight (GCVW).

To avoid undersizing the fuel cell stack, we applied efficiency values to account for losses that take place before the remaining energy arrives at the axle. The same battery and inverter efficiencies from Table II–10 were used for the FCEV calculations. Fuel cell stack efficiency losses are due to the conversion of onboard hydrogen to electricity. The DOE technical targets for Class 8 long-haul tractor-trailers are to reach 68 percent peak efficiency by around 2030 (this is the interim target; the ultimate target is to reach 72 percent efficiency).[430] [431] Table II–10 shows the fuel cell efficiency values that we used for MYs 2027–2032 in HD TRUCS, which are slightly more conservative yet include expected improvements over time. We averaged the high-tech peak efficiency estimates with low-tech peak efficiency estimates from ANL's 2022 Autonomie[432] for 2025, 2030, and 2035

[428] Note that ANL's analysis defines a fuel cell hybrid EV as a battery-dominant vehicle with a large energy battery pack and a small fuel cell, and a fuel cell EV as a fuel cell-dominant vehicle with a large fuel cell and a smaller power battery. Ours is a slightly different approach because we consider a fuel cell-dominant vehicle with a battery with energy cells. We took this approach because energy cell batteries are less expensive to manufacture than power cell batteries.

[429] Islam, Ehsan Sabri, Ram Vijayagopal, Aymeric Rousseau. ''A Comprehensive Simulation Study to Evaluate Future Vehicle Energy and Cost Reduction Potential'', *Report to the U.S. Department of Energy, Contract ANL/ESD–22.6.* October 2022. See Full report. Available online: *https://vms.taps.anl.gov/research-highlights/u-s-doe-vto-hfto-r-d-benefits/.*

[430] According to DOE, ultimate targets are ''based on 2050 simple cost of ownership assumptions and reflects anticipated timeframe for market penetration''.

[431] Marcinkoski, Jason et. al. ''DOE Advanced Truck Technologies: Subsection of the Electrified Powertrain Roadmap—Technical Targets for Hydrogen-Fueled Long-Haul Tractor-Trailer Trucks. October 31, 2019. Available online: *https://www.hydrogen.energy.gov/pdfs/19006_hydrogen_class8_long_haul_truck_targets.pdf.*

[432] Islam, Ehsan Sabri, Ram Vijayagopal, Aymeric Rousseau. ''A Comprehensive Simulation Study to Evaluate Future Vehicle Energy and Cost Reduction Potential'', *Report to the U.S. Department of Energy,*

Continued

for available vehicle types. We then linearly interpolated these averaged values to calculate values for each year.

linearly interpolated these averaged values to calculate values for each year.

TABLE II–10—FCEV FUEL CELL EFFICIENCIES FOR MY 2027–2032

Component	2027 (%)	2028 (%)	2029 (%)	2030 (%)	2031 (%)	2032 (%)
Fuel Cell	64.5	64.5	64.5	66.0	66.0	66.0

c. Battery Pack

As described in DRIA Chapter 2.5.1.1.3, in HD TRUCS, the battery power accounts for the difference between the power demand of the e-motor at any moment and the maximum power output of the fuel cell stack. We sized the battery to meet these power needs in excess of the fuel cell stack's capability only when the fuel cell cannot provide sufficient power. In our analysis, the remaining power needs are sustained for a duration of 10 minutes (*e.g.,* to assist with a climb up a steep hill).

d. Onboard Hydrogen Storage Tank

A FCEV is re-fueled like a gasoline or diesel-fueled vehicle. We determined the capacity of the onboard hydrogen energy storage system using an approach like the BEV methodology for battery pack sizing in DRIA Chapter 2.4.1.1, but we based the amount of hydrogen needed on the daily energy consumption needs of a FCEV.

As described in DRIA Chapter 2.5.1.2, we converted FCEV energy consumption (kWh) into hydrogen weight using an energy content of 33.33 kWh per kg of hydrogen. In our analysis, 95 percent of the hydrogen in the tank (''usable H2'') can be accessed. This is based on targets for light-duty vehicles, where a 700-bar hydrogen fuel tank with a capacity of 5.9 kg has 5.6 kg of usable hydrogen.[433] Furthermore, we added an additional 10 percent to the tank size in HD TRUCS to avoid complete depletion of hydrogen from the tank.

E. Technology, Charging Infrastructure, and Operating Costs

In the following subsections, we first discuss BEV technology (Section II.E.1) and associated EVSE technology costs (Section II.E.2) and FCEV technology costs (Section II.E.3). DRIA Chapter 2.4.3. (for BEVs) and DRIA Chapter 2.5.2 (for FCEVs) includes the cost estimates for each of the 101 applications. We then discuss the Inflation Reduction Act tax credits we quantified in our analysis in Section II.E.4. Our assessment of operating costs including the fuel or electricity costs, along with the maintenance and repair costs, are presented in Section II.E.5. This subsection concludes with the overall payback analysis in Section II.E.6. DRIA Chapter 2.8.2 includes the vehicle technology costs, EVSE costs, operating costs, and payback results for each of the 101 HD applications. The technology costs aggregated into MOVES categories are also described in detail in DRIA Chapter 3.1.

1. BEV Technology Costs

The incremental cost of a BEV powertrain system is calculated as the cost difference from the comparable vehicle powertrain with an ICE. The ICE vehicle powertrain cost is a sum of the costs of the engine (including the projected cost of the HD2027 standards), alternator, gearbox (transmission), starter, torque converter, and final drive system.

Heavy-duty BEV powertrain costs consist of the battery, electric motor, inverter, converter, onboard charger, power electronics controller, transmission or gearbox, final drive, and any electrical accessories. DRIA Chapter 2.4.3 contains additional detail on our cost projections for each of these components. We request comment, including additional data, on our analysis for consideration in the final rule regarding current and projected BEV component costs.

Battery costs are widely discussed in the literature because they are a key driver of the cost of a HD electric vehicle. The per unit cost of the battery, in terms of $/kWh, is the most common metric in determining the cost of the battery as the final size of the battery may vary significantly between different applications. The total battery pack cost is a function of the per unit kWh cost and the size (in terms of kWh) of the pack.

There are numerous projections for battery costs and battery pricing in the literature that cover a range of estimates. Sources do not always clearly define what is included in their cost or price projections, nor whether the projections reflect direct manufacturing costs incurred by the manufacturer or the prices seen by the end-consumer. Except as noted, the values in the literature we used were developed prior to enactment of the Inflation Reduction Act. For example, BloombergNEF presents battery prices that would reach $100 per kWh in 2026.[434] In 2021, ANL developed cost projections for heavy-duty vehicle battery packs in their benefit analysis (BEAN) model, that ranged from $225 per kWh to $175 per kWh in 2027 and drop to $150 per kWh to $115 per kWh in 2035.[435] In a recent update to BEAN, released after the IRA was passed, ANL now projects heavy-duty battery pack costs in the range of $95 per kWh to $128 per kWh in 2025 and a drop to between $70 per kWh and $90 per kWh in 2035.[436] The direct manufacturing battery cost for MY 2027 used in HD TRUCS is based on a literature review of costs of zero-emission truck components conducted by the International Council on Clean Transportation (ICCT).[437] As described in detail in DRIA Chapter 2.4.3.1, we considered this source to be a comprehensive review of the literature at the time of the HD TRUCS analysis for the cost of battery packs in the

Contract ANL/ESD–22.6. October 2022. See Medium- and heavy-duty vehicles (assumptions). Available online: *https://vms.taps.anl.gov/research-highlights/u-s-doe-vto-hfto-r-d-benefits/.*

[433] U.S. Department of Energy, US Drive. ''Target Explanation Document: Onboard Hydrogen Storage for Light-Duty Fuel Cell Vehicles''. 2017. Available online: *https://www.energy.gov/sites/prod/files/2017/05/f34/fcto_targets_onboard_hydro_storage_explanation.pdf.*

[434] Bloomberg NEF. ''Battery Pack Prices Fall to an Average of $132/kWh, But Rising Commodity Prices Start to Bite.'' November 30, 2021. *https://about.bnef.com/blog/battery-pack-prices-fall-to-an-average-of-132-kwh-but-rising-commodity-prices-start-to-bite/.*

[435] Argonne National Lab, Vehicle & Mobility Systems Group, BEAN, found at: *https://vms.taps.anl.gov/tools/bean/* (accessed August 2022).

[436] Argonne National Lab, Vehicle & Mobility Systems Group, BEAN, found at: *https://vms.taps.anl.gov/tools/bean/* (accessed December 2022).

[437] Sharpe, Ben and Hussein Basma. ''A meta-study of purchase costs for zero-emission trucks''. The International Council on Clean Transportation, Working Paper 2022–09 (February 2022). Available online: *https://theicct.org/publication/purchase-cost-ze-trucks-feb22/.*

absence of the IRA, which may mean that it presents higher costs than will be realized with the incentives in the IRA, even when accounting for the battery tax credit described in Section II.E.4. In 2025, the average cost is estimated to be $163.50/kWh (2019$) and, in 2030, the average cost is projected to fall to $100 (2019$). We applied a linear interpolation of these values that yields an estimated cost of $138/kWh (2019$) for MY 2027. We then projected the costs to MY 2032 by using an EPA estimate of market learning related to battery production and the respective reduction in battery costs over this period of time, as shown in Table II–11. We request comment, including data, on our approach and projections for battery pack costs for the heavy-duty sector, including values that specifically incorporate the potential impacts of the IRA.

TABLE II–11—DIRECT MANUFACTURING PACK-LEVEL BATTERY COSTS IN HD TRUCS

[2021$]

Model year	2027	2028	2029	2030	2031	2032
Battery Cost ($/kWh)	145	134	126	120	115	111

Batteries are the most significant cost component for BEVs and the IRA section 13502, ''Advanced Manufacturing Production Credit,'' has the potential to significantly reduce the cost of BEVs whose batteries are produced in the United States. As discussed in Section II.E.4, we thus then also accounted for the IRA Advanced Manufacturing Production Credit, which provides up to $45 per kWh tax credits (with specified phase-out in calendar years (CYs) 2030–2033) for the production and sale of battery cells and modules, and additional tax credits for producing critical minerals such as those found in batteries, when such components or minerals are produced in the United States and other criteria are met.

An electric drive (e-drive)—another major component of an electric vehicle—includes the electric motor, an inverter, a converter, and optionally, a transmission system or gearbox. The electric energy in the form of direct current (DC) is provided from the battery; an inverter is used to change the DC into alternating current (AC) for use by the motor. The motor then converts the electric power into mechanical or motive power to move the vehicle. Conversely, the motor also receives AC from the regenerative braking, whereby the converter changes it to DC to be stored in the battery. The transmission reduces the speed of the motor through a set of gears to an appropriate speed at the axle. An emerging trend is to replace the transmission and driveline with an e-axle, which is an electric motor integrated into the axle, e-axles are not explicitly covered in our cost analysis.[438] We request data on e-axle costs that we could consider for the final rule.

Similar to the battery cost, there is a range of electric drive cost projections available in the literature. One reason for the disparity is differences across the literature is what is included in each for the ''electric drive''; some cost estimates include only the electric motor and others present a more integrated model of e-motor/inverter/gearbox combination. As described in detail in DRIA Chapter 2.4.3.2.1, EPA's MY 2027 e-drive cost, shown in Table II–12, comes from ANL's 2022 BEAN model and is a linear interpolation of the average of the high- and low-tech scenarios for 2025 and 2030, adjusted to 2021$.[439] We then calculated MY 2028–2032 values, also shown in Table II–12, using an EPA estimate of market learning shown in DRIA Chapter 3.2.1. We welcome comment, including data, on our assessment of e-drive costs.

TABLE II–12—E-DRIVE DIRECT MANUFACTURING COSTS IN HD TRUCS

[$/kW] [2021$]

Model year	2027	2028	2029	2030	2031	2032
E-Drive Cost ($/kW)	20	18	17	16	16	15

Gearbox and final drive units are used to reduce the speed of the motor and transmit torque to the axle of the vehicle. In HD TRUCS, the final drive unit direct manufacturing cost is $1,500 per unit, based on the ''Power Converter'' average cost in ANL's BEAN model.[440] The cost of the gearbox varies depending on the vehicle weight class and duty cycle. In our assessment, all light heavy-duty BEVs would be direct drive and have no transmission and therefore no cost, consistent with ANL's BEAN model. We then mapped BEAN gearbox costs for BEVs to the appropriate medium heavy-duty and heavy heavy-duty vehicles in HD TRUCS. Gearbox and final drive costs for BEVs are in DRIA Chapter 2.4.3.2.

Power electronics are another electrification component (along with batteries and motors) where a DC–DC converter transitions high battery voltage to a common 12V level for auxiliary uses. EPA's power electronics and electric accessories costs of $6,000 per unit came from ANL's BEAN model.[441] See DRIA Chapter 2.4.3.2.2 for further details.

When using a Level 2 charging plug, an on-board charger converts AC power from the grid to usable DC power via an AC–DC converter. When using a DC fast charger (DCFC), any AC–DC converter is bypassed, and the high-voltage battery is charged directly. As further discussed in DRIA Chapter 2.4.3.3, EPA's on-board charger costs, as shown in Table II–13, come from ANL's BEAN model and we averaged the low-tech and high-tech values for 2025 and 2030, and then MY

[438] E-axles are an emerging technology that have potential to realize efficiency gains because they have fewer moving parts.

[439] Argonne National Lab, Vehicle & Mobility Systems Group, BEAN, found at: *https://vms.taps.anl.gov/tools/bean/* (accessed December 2022).

[440] *Ibid.*

[441] Argonne National Lab, Vehicle & Mobility Systems Group, BEAN, found at: *https://vms.taps.anl.gov/tools/bean/* (accessed August 2022).

2027 was linearly interpolated and adjusted to 2021$.[442] We then calculated the MY 2028–2032 costs using the learning curve shown in DRIA Chapter 3.2.1.

TABLE II–13—ON-BOARD CHARGER DIRECT MANUFACTURING COSTS IN HD TRUCS

[2021$]

Model year	2027	2028	2029	2030	2031	2032
On-Board Charger Cost ($/unit)	38	35	33	31	30	29

The total upfront BEV direct manufacturing cost is the summation of the per-unit cost of the battery, motor, power electronics, on-board charger, gearbox, final drive, and accessories. The total direct manufacturing technology costs for BEVs for each of the 101 vehicle types in HD TRUCS can be found in DRIA Chapter 2.4.3.5 for MY 2027 and MY 2032.

2. Charging Infrastructure Costs

In our analysis of depot charging infrastructure costs, we account for the cost to purchasers to procure both EVSE (which we refer to as the hardware costs) as well as costs to install the equipment. These installation costs typically include labor and supplies, permitting, taxes, and any upgrades or modifications to the on-site electrical service. We developed our EVSE cost estimates from the available literature, as discussed in DRIA Chapter 2.6.

Both hardware and installation costs could vary over time. For example, hardware costs could decrease due to manufacturing learning and economies of scale. Recent studies by ICCT assumed a 3 percent reduction in hardware costs for EVSE per year to 2030.[443] [444] By contrast, installation costs could increase due to growth in labor or material costs. Installation costs are also highly dependent on the specifics of the site including whether sufficient electric capacity exists to add charging infrastructure and how much trenching or other construction is required. If fleet owners choose to install charging stations at easier, and therefore, lower cost sites first, then installation costs could rise over time as stations are developed at more challenging sites. One of the ICCT studies found that these and other countervailing factors could result in the average cost of a 150 kW EVSE port in 2030 being similar (~3 percent lower) to that in 2021.[445] After considering the uncertainty on how costs may change over time, we keep the combined hardware and installation costs per EVSE port constant. We request comment on this approach.

Our infrastructure analysis centered around four charging types for heavy-duty depot charging. As shown in Table II–14, the EVSE costs we used in our analysis range from about $10,000 for a Level 2 port to over $160,000 for a 350 kW DCFC port. As described in Chapter 2.6, in our analysis, we allow up to two vehicles to share one DCFC port if there is sufficient depot dwell time for both vehicles to meet their daily charging needs.[446] In those cases, the EVSE costs per vehicle are halved. We request comment, including data, on our approach and assessment of current and future costs for charging equipment and installation.

TABLE II–14—COMBINED HARDWARE AND INSTALLATION EVSE COSTS, PER VEHICLE

[2021$]

Charging type	Cost (1 Vehicle per port)	Cost (2 Vehicles per port)
Level 2 (19.2 kW)	$10,541	Not Applicable
DCFC–50 kW	31,623	$15,811
DCFC–150 kW	99,086	49,543
DCFC–350 kW	162,333	81,166

EPA acknowledges that there may be additional infrastructure needs and costs beyond those associated with charging equipment itself. While planning for additional electricity demand is a standard practice for utilities and not specific to BEV charging, the buildout of public and private charging stations (particularly those with multiple high-powered DC fast charging units) could in some cases require upgrades to local distribution systems. For example, a recent study found power needs as low as 200 kW could trigger a requirement to install a distribution transformer.[447] The use of onsite battery storage and renewables may be able to reduce the need for some distribution upgrades; station operators may also opt to install these to mitigate demand charges associated with peak

[442] Argonne National Lab, Vehicle & Mobility Systems Group, BEAN, found at: *https://vms.taps.anl.gov/tools/bean/* (accessed August 2022).

[443] Minjares, Ray, Felipe Rodriguez, Arijit Sen, and Caleb Braun. ''Infrastructure to support a 100% zero-emission tractor-trailer fleet in the United States by 2040''. ICCT, September 2021. Available online: *https://theicct.org/sites/default/files/publications/ze-tractor-trailer-fleet-us-hdvs-sept21.pdf.*

[444] Bauer, Gordon, Chih-Wei Hsu, Mike Nicholas, and Nic Lutsey. ''Charging Up America: Assessing the Growing Need for U.S. Charging Infrastructure Through 2030''. The International Council on Clean Transportation, July 2021. Available online: *https://theicct.org/wp-content/uploads/2021/12/charging-up-america-jul2021.pdf.*

[445] *Ibid.*

[446] We note that for some of the vehicle types we evaluated, more than two vehicles could share a DCFC port and still meet their daily electricity consumption needs. However, we choose to limit sharing to two vehicles pending market developments and more robust depot dwell time estimates.

[447] Borlaug, B., Muratori, M., Gilleran, M. et al, ''Heavy-duty truck electrification and the impacts of depot charging on electricity distribution systems,'' Nat Energy 6, 673–682 (2021). Accessed on January 11, 2023, at *https://doi.org/10.1038/s41560-021-00855-0.*

power.[448] However, there is considerable uncertainty associated with future distribution upgrade needs, and in many cases, some costs may be borne by utilities rather than directly incurred by BEV or fleet owners. Therefore, we do not model them directly as part of our infrastructure cost analysis. We welcome comments on this and other aspects of our cost analysis.

As discussed in Section V, we model changes to power generation due to the increased electricity demand anticipated in the proposal as part of our upstream analysis. We project the additional generation needed to meet the demand of the heavy-duty BEVs in the proposal to be relatively modest (as shown in DRIA Chapter 6.5). As the proposal is estimated to increase electric power end use by heavy-duty electric vehicles by 0.1 percent in 2027 and increasing to 2.8 percent in 2055. The U.S. electricity end use between the years 1992 and 2021, a similar number of years included in our proposal analysis, increased by around 25 percent [449] without any adverse effects on electric grid reliability or electricity generation capacity shortages. Grid reliability is not expected to be adversely affected by the modest increase in electricity demand associated with HD BEV charging.

A GAO report noted that the private sector and the government share responsibility for the reliability of the U.S. electric power grid. The report stated, ''Most of the electricity grid—the commercial electric power transmission and distribution system comprising power lines and other infrastructure—is owned and operated by private industry. However, Federal, state, local, Tribal, and territorial governments also have significant roles in enhancing the resilience of the electricity grid.'' [450] For instance, at the Federal level, the Department of Homeland Security (DHS) coordinates Federal efforts to promote the security and reliability of the nation's energy sector; the Department of Energy (DOE) leads Federal efforts including research and technology development; and the Federal Energy Regulatory Commission (FERC) regulates the interstate electricity transmission and is responsible for reviewing and approving mandatory electric Reliability Standards, which are developed by the North American Electric Reliability Corporation (NERC).[451] NERC is the federally designated U.S. electric reliability organization which ''develops and enforces Reliability Standards; annually assesses seasonal and long-term reliability; monitors the bulk power system through system awareness; and educates, trains, and certifies industry personnel.'' [452] These efforts help to keep the U.S. electric power grid is reliable. We also consulted with FERC and EPRI staff on bulk power system reliability and related issues.

U.S. electric power utilities routinely upgrade the nation's electric power system to improve grid reliability and to meet new electric power demands. For example, when confronted with rapid adoption of air conditioners in the 1960s and 1970s, U.S. electric power utilities successfully met the new demand for electricity by planning and building upgrades to the electric power distribution system. Likewise, U.S. electric power utilities planned and built distribution system upgrades required to service the rapid growth of power-intensive data centers and server farms over the past two decades. U.S. electric power utilities have already successfully designed and built the distribution system infrastructure required for 1.4 million battery electric vehicles.[453] Utilities have also successfully integrated 46.1 GW of new utility-scale electric generating capacity into the grid.[454]

When taking into consideration ongoing upgrades to the U.S. electric power grid, and that the U.S. electric power utilities generally have more capacity to produce electricity than is consumed,[455] the expected increase in electric power demand attributable to vehicle electrification is not expected to adversely affect grid reliability due to the modest increase in electricity demand associated with electric vehicle charging. The additional electricity demand from HD BEVs will depend on the time of day that charging occurs, the type or power level of charging, and the use of onsite storage and vehicle-to-grid (V2G) or other vehicle-grid-integration (VGI) technology, among other considerations, as discussed in DRIA Chapter 1.6.4. As noted by Lipman et al.,[456] a wide variety of organizations are engaged in VGI research, including the California Energy Commission,[457] California Public Utilities Commission,[458] California Independent System Operator,[459] the Electric Power Research Institute, as well as charging providers, utilities (*e.g.,* SCE, PG&E, SDG&E), and automakers. Electric Island, a truck charging station deployed by Daimler Trucks North America and Portland General Electric which is planned to eventually include megawatt-level charging, will offer an opportunity to test energy management and VGI with heavy-duty BEVs. Future plans for Electric Island also include the use of onsite solar generation and battery storage.[460]

Finally, we note that DOE is engaged in multiple efforts to modernize the grid and improve resilience and reliability. For example, in November 2022, DOE announced $13 billion in funding opportunities under the BIL to support transmission and distribution infrastructure. This includes $3 billion for smart grid grants with a focus on PEV integration among other topics.[461]

[448] Matt Alexander, Noel Crisostomo, Wendell Krell, Jeffrey Lu, Raja Ramesh,'' Assembly Bill 2127: Electric Vehicle Charging Infrastructure Assessment,'' July 2021, California Energy Commission. Accessed March 9, 2023, at *https://www.energy.ca.gov/programs-and-topics/programs/electric-vehicle-charging-infrastructure-assessment-ab-2127*.

[449] Annual Energy Outlook 2022, U.S. Energy Information Administration, March 3, 2022 (*https://www.eia.gov/outlooks/aeo/narrative/introduction/sub-topic-01.php*).

[450] Federal Efforts to Enhance Grid Resilience. General Accounting Office, GAO–17–153, 1/25/2017. *https://www.gao.gov/assets/gao-17-153.pdf*.

[451] Electricity Grid Resilience. General Accounting Office, GAO–21–105403, 9/20/2021, *https://www.gao.gov/assets/gao-21-105403.pdf*.

[452] North American Electric Reliability Corporation. ''About NERC''. Available online: *https://www.nerc.com/AboutNERC/Pages/default.aspx*.

[453] U.S. DOE Alternative Fuels Data Center, Maps and Data—Electric Vehicle Registrations by State, *https://afdc.energy.gov/data/*.

[454] EIA, ''Electric Power Annual 2021'', November 2022. Available online: *https://www.eia.gov/electricity/annual/html/epa_01_01.html*.

[455] EIA, ''Electric Power Annual 2021'', November 2022. Available online: *https://www.eia.gov/electricity/annual/html/epa_01_01.html*.

[456] Lipman, Timothy, Alissa Harrington, and Adam Langton. 2021. ''Total Charge Management of Electric Vehicles.'' California Energy Commission.'' Publication Number: CEC–500–2021–055. Available online: *https://www.energy.ca.gov/sites/default/files/2021-12/CEC-500-2021-055.pdf*.

[457] Chhaya, S., et al., ''Distribution System Constrained Vehicle-to-Grid Services for Improved Grid Stability and Reliability,'' Publication Number: CEC–500–2019–027, 2019. Available online: *https://www.energy.ca.gov/sites/default/files/2021-06/CEC-500-2019-027.pdf*.

[458] Order Instituting Rulemaking to Continue the Development of Rates and Infrastructure for Vehicle Electrification. California Public Utilities Commission, Rulemaking 18–12–006, 12/21/2020.

[459] California Independent System Operator (CAISO), ''California Vehicle-Grid Integration (VGI) Roadmap: Enabling vehicle-based grid services,'' February 2014.

[460] PGE, ''Daimler Trucks North America, Portland General Electric open first-of-its-kind heavy-duty electric truck charging site,'' April 21, 2021. Available online: *https://portlandgeneral.com/news/2021-04-21-daimler-portland-general-electric-open-electric-charging-site*.

[461] DOE, ''Biden-Harris Administration Announces $13 Billion to Modernize and Expand America's Power Grid,'' November 18, 2022. Available online: *https://www.energy.gov/articles/biden-harris-administration-announces-13-billion-modernize-and-expand-americas-power-grid*.

3. FCEV Technology Costs

FCEVs and BEVs include many of the same components such as a battery pack, e-motor, power electronics, gearbox unit, final drive, and electrical accessories. Therefore we used the same costs for these components across vehicles used for the same applications; for detailed descriptions of these components, see DRIA Chapter 2.4.3. In this subsection and DRIA Chapter 2.5.2, we present the costs for components for FCEVs that are different from a BEV. These components include the fuel cell stack and hydrogen fuel tank. The same energy cell battery costs used for BEVs are used for fuel cell vehicles, but the battery size of a comparable FCEV is smaller. We request comment, including data, on our approach and cost projections for FCEV components.

i. Fuel Cell Stack Costs

The fuel cell stack is the most expensive component of a heavy-duty FCEV. Fuel cells for the heavy-duty sector are expected to be more expensive than fuel cells for the light-duty sector because they operate at higher average continuous power over their lifespan, which requires a larger fuel cell stack size, and because they have longer durability needs (*i.e.,* technology targets are for 25,000 to 30,000 hours for a truck versus 8,000 hours for cars).[462]

Projected costs vary widely in the literature. They are expected to decrease as manufacturing matures. Larger production volumes are anticipated as global demand increases for fuel cell systems for HD vehicles, which could improve economies of scale.[463] Costs are also anticipated to decline as durability improves, which could extend the life of fuel cells and reduce the need for parts replacement.[464] Burke et al. compared estimates from the literature and chose values of $240 per kW in 2025 for a high case in their analysis, based on 1,000 heavy-duty fuel cell units produced per year, and $145 per kW for both a low case in 2025 and a high case in 2030, based on 3,000 units produced per year.[465]

The interim DOE cost target for Class 8 tractor-trailer fuel stacks is $80 per kW by 2030. Their ultimate target is $60 per kW in 2050, set to ensure that costs are comparable to those of advanced diesel engines and other factors. These targets are based on 100,000 units per year production volume. They pointed to analysis that suggests that 2019 costs at a manufacturing volume of 1,000 units per year were around $190 per kW.[466] In BEAN model updates, ANL estimated a range based on vehicle type of between $156 per kW and $174 per kW in 2025, and from $65 per kW to $99 per kW by 2035.[467]

A Sharpe and Basma meta-study of other reports found 2025 costs ranging from $750 per kW to $50 per kW. The authors stated that they expect fuel cell costs to drop by about 30 percent between 2025 and 2030 due to manufacturer learning, improved materials and performance, and economies of scale.[468] Like the approach we took for BEV battery costs, we averaged the 2025 cost values from the Sharpe and Basma meta-study, averaged the 2030 values, and then linearly interpolated to get MY 2027 values and adjusted to 2021$; we then applied the learning curve shown in DRIA Chapter 3.2.1 to calculate MY 2028–2032 values. The resulting fuel cell stack direct manufacturing costs are shown in Table II–15.[469]

TABLE II–15—HD FUEL CELL STACK DIRECT MANUFACTURING COSTS

[2021$]

Model year	2027	2028	2029	2030	2031	2032
$/kW	242	223	210	200	192	185

ii. Hydrogen Fuel Tank Costs

Hydrogen storage cost projections also vary widely in the literature. Sharpe and Basma reported costs ranging from as high as $1,289 per kg to $375 per kg of usable hydrogen in 2025. They expect hydrogen tank costs to drop by 21 percent between 2025 and 2030 due to lighter weight and lower cost carbon fiber-reinforced materials, technology improvements, and economies of scale.[470]

The interim DOE target for Class 8 tractor-trailers is $300 per kg of hydrogen by 2030. Their ultimate target is $266 per kg (2016$) by 2050. They include all components necessary to support the tank and are based on a production volume of 100,000 tanks per year. They point to analysis that suggests that 2019 costs for 700-bar tanks at a manufacturing volume of 1,000 tanks per year were roughly $1,200 per kg.[471] For reference, the Kenworth ''beta'' fuel cell truck holds

[462] Marcinkoski, Jason et. al. ''DOE Advanced Truck Technologies: Subsection of the Electrified Powertrain Roadmap—Technical Targets for Hydrogen-Fueled Long-Haul Tractor-Trailer Trucks. October 31, 2019. Available online: *https://www.hydrogen.energy.gov/pdfs/19006_hydrogen_class8_long_haul_truck_targets.pdf.*

[463] Deloitte China. ''Fueling the Future of Mobility: Hydrogen and fuel cell solutions for transportation, Volume 1''. 2020. Available online: *https://www2.deloitte.com/content/dam/Deloitte/cn/Documents/finance/deloitte-cn-fueling-the-future-of-mobility-en-200101.pdf.*

[464] Deloitte China. ''Fueling the Future of Mobility: Hydrogen and fuel cell solutions for transportation, Volume 1''. 2020. Available online: *https://www2.deloitte.com/content/dam/Deloitte/cn/Documents/finance/deloitte-cn-fueling-the-future-of-mobility-en-200101.pdf.*

[465] U.S. Department of Energy. ''DOE National Clean Hydrogen Strategy and Roadmap''. Draft September 2022. Available online: *https://www.hydrogen.energy.gov/pdfs/clean-hydrogen-strategy-roadmap.pdf.*

[466] Marcinkoski, Jason et. al. ''DOE Advanced Truck Technologies: Subsection of the Electrified Powertrain Roadmap—Technical Targets for Hydrogen-Fueled Long-Haul Tractor-Trailer Trucks. October 31, 2019. Available online: *https://www.hydrogen.energy.gov/pdfs/19006_hydrogen_class8_long_haul_truck_targets.pdf. https://www.hydrogen.energy.gov/pdfs/19006_hydrogen_class8_long_haul_truck_targets.pdf.*

[467] Argonne National Lab, Vehicle & Mobility Systems Group, BEAN, found at: *https://vms.taps.anl.gov/tools/bean/* (accessed December 2022).

[468] Sharpe, Ben and Hussein Basma. ''A meta-study of purchase costs for zero-emission trucks''. The International Council on Clean Transportation, Working Paper 2022–09 (February 2022). Available online: *https://theicct.org/publication/purchase-cost-ze-trucks-feb22/.*

[469] IRA section 13502 provides tax credits for 10 percent of the cost of producing applicable critical materials, including those found in fuel cells (providing that the minerals meet certain specifications), when such components or minerals are produced in the U.S. We did not include a detailed cost breakdown of fuel cells quantitatively in our analysis, but the potential impact of the tax credit on fuel cells may be significant because platinum (an applicable critical mineral commonly used in fuel cells) is a major contributor to the cost of fuel cells.

[470] Sharpe, Ben and Hussein Basma. ''A meta-study of purchase costs for zero-emission trucks''. The International Council on Clean Transportation, Working Paper 2022–09 (February 2022). Available online: *https://theicct.org/publication/purchase-cost-ze-trucks-feb22/.*

[471] Marcinkoski, Jason et al. ''DOE Advanced Truck Technologies: Subsection of the Electrified Powertrain Roadmap—Technical Targets for Hydrogen-Fueled Long-Haul Tractor-Trailer Trucks. October 31, 2019. Available online: *https://www.hydrogen.energy.gov/pdfs/19006_hydrogen_class8_long_haul_truck_targets.pdf.*

six 10-kg hydrogen storage tanks at 700 bar.[472]

Like the approach we took for battery and fuel cell stack costs, we averaged all of the 2025 cost values in the Sharpe and Basma meta-study, averaged all of the 2030 values, and then linearly interpolated to determine the MY 2027 value, adjusted to 2021 dollars. We applied the learning curve shown in DRIA Chapter 3.2.1 to calculate MY 2028–2032 values. The hydrogen fuel tank direct manufacturing costs are shown in Table II–16.

TABLE II–16—HYDROGEN FUEL TANK DIRECT MANUFACTURING COSTS

[2021$]

	MY 2027	MY 2028	MY 2029	MY 2030	MY 2031	MY 2032
$/kg H_2	801	738	694	660	634	612

4. Inflation Reduction Act Tax Credits

The IRA,[473] which was signed into law on August 16, 2022, includes a number of provisions relevant to vehicle electrification. There are two provisions of the IRA we included within our quantitative analysis in HD TRUCS. First, Section 13502, ''Advanced Manufacturing Production Credit,'' provides up to $45 per kWh tax credits for the production and sale of battery cells and modules when such components are produced in the United States and other qualifications are met. Second, Section 13403, ''Qualified Commercial Clean Vehicles,'' provides for a vehicle tax credit applicable to HD vehicles if certain qualifications are met. Beyond these two tax credits described in sections 13403 and 13502 of the IRA, there are numerous provisions in the IRA and the BIL[474] that may impact HD vehicles and increase adoption of HD ZEV technologies. These range from tax credits across the supply chain, to grants which may help direct ZEVs to communities most burdened by air pollution, to funding for programs to build out electric vehicle charging infrastructure, as described in Section I of this preamble and DRIA Chapter 1.3.2. We welcome comment on our assessment of how the IRA will impact the heavy-duty industry, and how EPA could consider reflecting those impacts in our assessment for establishing the HD GHG standards under this proposal, including comment on methods to appropriately account for these provisions in our assessment.

Regarding the first of the two provisions, IRA section 13502, ''Advanced Manufacturing Production Credit,'' provides up to $45 per kWh tax credits for the production and sale of battery cells (up to $35 per kWh) and modules (up to $10 per kWh) and 10 percent of the cost of producing critical minerals such as those found in batteries, when such components or minerals are produced in the United States and other qualifications are met. These credits begin in CY 2023 and phase down starting in CY 2030, ending after CY 2032. As further discussed in DRIA Chapter 2.4.3.1, we recognize that there are currently few manufacturing plants for HD vehicle batteries in the United States. We expect that the industry will respond to this tax credit incentive by building more domestic battery manufacturing capacity in the coming years, in part due to the BIL and IRA. For example, Proterra recently announced its first heavy-duty battery manufacturing plant in the United States,[475] Tesla is expanding its facilities in Nevada to produce its Semi BEV tractor and battery cells,[476] and Cummins has entered into an agreement with Arizona-based Sion Power to design and supply battery cells for commercial electric vehicle applications.[477] In addition, DOE is funding through the BIL battery materials processing and manufacturing projects to ''support new and expanded commercial-scale domestic facilities to process lithium, graphite and other battery materials, manufacture components, and demonstrate new approaches, including manufacturing components from recycled materials.''[478] Thus, we model this tax credit in HD TRUCS such that HD BEV and FCEV manufacturers fully utilize the battery module tax credit and gradually increase their utilization of the cell tax credit for MY 2027–2029 until MY 2030 and beyond, when they earn 100 percent of the available cell and module tax credits. The battery pack costs and battery tax credits used in our analysis are shown in Table II–17. We request comment on our approach to modeling this tax credit, including our projection that the full value of the tax credit earned by the manufacturer is passed through to the purchaser because market competition would drive manufacturers to minimize their prices.

TABLE II–17—PACK-LEVEL BATTERY DIRECT MANUFACTURING COSTS AND IRA TAX CREDITS IN HD TRUCS

[2021$]

Model year	2027	2028	2029	2030	2031	2032
Battery Pack Cost ($/kWh)	145	134	126	120	115	111

[472] *https://www.kenworth.com/media/voffdzok/ata-fuel-cell-flyer-08-25-2021-v2.pdf* and *https://www.greencarreports.com/news/1120765_toyota-and-kenworth-to-build-10-fuel-cell-semis-for-la-port-duty.*

[473] Inflation Reduction Act of 2022, Public Law 117–169, 136 Stat. 1818 (2022) (''Inflation Reduction Act'' or ''IRA''), available at *https://www.congress.gov/117/bills/hr5376/BILLS-117hr5376enr.pdf.*

[474] United States, Congress. Public Law 117–58. Infrastructure Investment and Jobs Act of 2021. *Congress.gov, www.congress.gov/bill/117th-congress/house-bill/3684/text.* 117th Congress, House Resolution 3684, passed 15 Nov. 2021.

[475] Proterra. ''First Proterra Powered commercial EV battery produced at new Powered 1 battery factory''. January 12, 2023. Available online: *https://www.proterra.com/press-release/first-battery-at-powered1-factory/.*

[476] Sriram, Akash, Aditya Soni, and Hyunjoo Jin. ''Tesla plans $3.6 bln Nevada expansion to make Semi truck, battery cells.'' Reuters. January 25, 2023. Last accessed on March 31, 2023 at *https://www.reuters.com/markets/deals/tesla-invest-over-36-bln-nevada-build-two-new-factories-2023-01-24/.*

[477] Sion Power. ''Cummins Invests in Sion Power to Develop Licerion® Lithium Metal Battery Technology for Commercial Electric Vehicle Applications''. November 30, 2021. Available online: *https://sionpower.com/2021/cummins-invests-in-sion-power-to-develop-licerion-lithium-metal-battery-technology-for-commercial-electric-vehicle-applications/.*

[478] U.S. Department of Energy. ''Bipartisan Infrastructure Law: Battery Materials Processing and Battery Manufacturing & Recycling Funding Opportunity Announcement—Factsheets''. October 19, 2022. Available online: *https://www.energy.gov/sites/default/files/2022-10/DOE%20BIL%20Battery%20FOA-2678%20Selectee%20Fact%20Sheets%20-%201_2.pdf.*

TABLE II–17—PACK-LEVEL BATTERY DIRECT MANUFACTURING COSTS AND IRA TAX CREDITS IN HD TRUCS—Continued

[2021$]

Model year	2027	2028	2029	2030	2031	2032
IRA Cell Credit ($/kWh)	8.75	17.50	26.25	26.25	17.50	8.75
IRA Module Credit ($/kWh)	10.00	10.00	10.00	7.50	5.00	2.50
IRA Total Battery Credit ($/kWh)	18.75	27.50	36.25	33.75	22.50	11.25
Battery Pack Cost Less IRA Total Battery Credit ($/kWh)	126.25	106.50	89.75	86.25	92.50	99.75

Regarding the second of the two provisions, IRA section 13403 creates a tax credit applicable to each purchase of a qualified commercial clean vehicle. These vehicles must be on-road vehicles (or mobile machinery) that are propelled to a significant extent by a battery-powered electric motor. The battery must have a capacity of at least 15 kWh (or 7 kWh if it is Class 3 or below) and must be rechargeable from an external source of electricity. This limits the qualified vehicles to BEVs and plug-in hybrid electric vehicles (PHEVs). Additionally, fuel cell electric vehicles (FCEVs) are eligible. The credit is available from calendar year (CY) 2023 through 2032, which overlaps with the model years for which we are proposing standards (MYs 2027 through 2032), so we included the tax credit in our calculations for each of those years in HD TRUCS.

For BEVs and FCEVs, the tax credit is equal to the lesser of: (A) 30 percent of the BEV or FCEV cost, or (B) the incremental cost of a BEV or FCEV when compared to a comparable ICE vehicle. The limit of this tax credit is $40,000 for Class 4–8 commercial vehicles and $7,500 for commercial vehicles Class 3 and below. For example, if a BEV costs $350,000 and a comparable ICE vehicle costs $150,000,[479] the tax credit would be the lesser of: (A) $0.30 \times \$350{,}000 = \$105{,}000$ or (B) $\$350{,}000 - \$150{,}000 = \$200{,}000$. In this example, (A) is less than (B), but (A) exceeds the limit of $40,000, so the tax credit would be $40,000.

We included this tax credit in HD TRUCS by decreasing the incremental upfront cost a vehicle purchaser must pay for a ZEV compared to a comparable ICE vehicle following the process explained in the previous paragraph. The calculation for this tax credit was done after applying a retail price equivalent to our direct manufacturing costs. We did not calculate the full cost of vehicles in our analysis, instead we determined that all Class 4–8 ZEVs could be eligible for the full $40,000 (or $7,500 for ZEVs Class 3 and below) if the incremental cost calculated compared to a comparable ICE vehicle was greater than that amount. In order for this determination to be true, all Class 4–8 ZEVs must cost more than $133,333 such that 30 percent of the cost is at least $40,000 (or $25,000 and $7,500, respectively, for ZEVs Class 3 and below), which seems reasonable based on our assessment of the literature.[480] As in the calculation described in the previous paragraph, both (A) and (B) are greater than the tax credit limit and the vehicle purchaser may receive the full tax credit. The incremental cost of a ZEV taking into account the tax credits for each vehicle segment in MY 2027 and MY 2032 are included in DRIA Chapter 2.8.2. We welcome comment on how we included the IRA tax credits for HD vehicles in our assessment.

5. Operating Costs

Operating costs for HD vehicles encompass a variety of costs, such as labor, insurance, registration fees, fueling, maintenance and repair (M&R), and other costs. For this analysis, we are primarily interested in costs that would differ for a comparable diesel-powered ICE vehicle and a ZEV.[481] These operational cost differences are used to calculate an estimated payback period in HD TRUCS. We expect fueling costs and M&R costs to be different for ZEVs than for comparable diesel-fueled ICE vehicles, but we do not anticipate other operating costs, such as labor and insurance, to differ significantly, so the following subsections focus on M&R and fueling costs. Operating costs are averaged over a 10-year time period of the annual M&R cost and annual fuel cost.

i. Maintenance and Repair Costs

M&R costs contribute to the overall operating costs for HD vehicles. To establish a baseline cost for maintenance and repair of diesel-fueled ICE vehicles, we relied on the research compiled by Burnham et al. and used equations found in the ANL's BEAN model.[482] [483] Burnham et al. used data from Utilimarc and the American Transportation Research Institute (ATRI) to estimate maintenance and repair costs per mile for multiple heavy-duty vehicle categories over time. We selected the box truck curve to represent vocational vehicles and short-haul tractors, and the semi-tractor curve to represent long-haul tractors.[484] Additional details regarding this analysis can be found in DRIA Chapter 2.3.4.2. Averaging the M&R costs for years 0–9 yields about 67 cents per mile for vocational vehicles and short-haul tractors and about 25 cents per mile for long-haul tractors, after adjusting to 2021$. We welcome comment, including additional data, on our approach and assessment of HD ICE vehicle M&R costs.

Data on real-world M&R costs for HD ZEVs is limited due to limited HD ZEV technology adoption today. We expect the overall maintenance costs to be lower for ZEVs compared to a comparable ICE vehicles for several reasons. First, an electric powertrain has fewer moving parts that accrue wear or need regular adjustments. Second, ZEVs do not require fluids such as engine oil or diesel exhaust fluid (DEF), nor do they require exhaust filters to reduce

[479] Sharpe, B., Basma, H. ''A meta-study of purchase costs for zero-emission trucks''. International Council on Clean Transportation. February 17, 2022. Available online: *https://theicct.org/wp-content/uploads/2022/02/purchase-cost-ze-trucks-feb22-1.pdf.*

[480] Burnham, A., Gohlke, D., Rush, L., Stephens, T., Zhou, Y., Delucchi, M.A., Birky, A., Hunter, C., Lin, Z., Ou, S., Xie, F., Proctor, C., Wiryadinata, S., Liu, N., Boloor, M. ''Comprehensive Total Cost of Ownership Quantification for Vehicles with Different Size Classes and Powertrains''. Argonne National Laboratory. April 1, 2021. Available at *https://publications.anl.gov/anlpubs/2021/05/167399.pdf.*

[481] For diesel-fueled ICE vehicles, we also estimated the cost of the diesel exhaust fluid (DEF) required for the selective catalytic reduction aftertreatment system. See DRIA Chapter 2.3.4.1 for DEF costs.

[482] Burnham, A., Gohlke, D., Rush, L., Stephens, T., Zhou, Y., Delucchi, M.A., Birky, A., Hunter, C., Lin, Z., Ou, S., Xie, F., Proctor, C., Wiryadinata, S., Liu, N., Boloor, M. ''Comprehensive Total Cost of Ownership Quantification for Vehicles with Different Size Classes and Powertrains''. Argonne National Laboratory. Chapter 3.5.5. April 1, 2021. Available at *https://publications.anl.gov/anlpubs/2021/05/167399.pdf.*

[483] Argonne National Lab, Vehicle & Mobility Systems Group, BEAN, found at: *https://vms.taps.anl.gov/tools/bean/* (accessed August 2022).

[484] Short haul tractors and vocational vehicles are represented by the same M&R equation because they have duty cycles and annual VMT that are similar.

particulate matter or other pollutants. Third, the per-mile rate of brake wear is expected to be lower for ZEVs due to regenerative braking systems. Several literature sources propose applying a scaling factor to diesel vehicle maintenance costs to estimate ZEV maintenance costs.[485] [486] [487] We followed this approach and applied a maintenance and repair cost scaling factor of 0.71 for BEVs and 0.75 for FCEVs to the maintenance and repair costs of diesel-fueled ICE vehicles. The scaling factors are based on an analysis from Wang et al. that estimates a future BEV heavy-duty truck would have a 29 percent reduction, and a future FCEV heavy-duty vehicle would have a 25 percent reduction, compared to a diesel-powered heavy-duty vehicle.[488] [489] We welcome comment on our approach and these projections.

In our payback analysis in HD TRUCS, we did not account for potential diesel engine rebuild costs for ICE vehicles, potential replacement battery costs for BEVs, or potential replacement fuel cell stack costs for FCEVs because our payback analysis typically covers a shorter period of time than the expected life of these components. Typical battery warranties being offered by HD BEV manufacturers range between 8 and 15 years today.[490] A BEV battery replacement may be practically necessary over the life of a vehicle if the battery deteriorates to a point where the vehicle range no longer meets the vehicle's operational needs. We believe that proper vehicle and battery maintenance and management can extend battery life. For example, manufacturers will utilize battery management system to maintain the temperature of the battery [491] as well active battery balancing to extend the life of the battery.[492] [493] Likewise, pre-conditioning has also shown to extend the life of the battery as well.[494] Furthermore, research suggests that battery life is expected to improve with new batteries over time as battery chemistry and battery charging strategies improve, such that newer MY BEVs will have longer battery life. We request comment on this approach for both ICE vehicles and ZEVs, in addition to data on battery and fuel stack replacement costs, engine rebuild costs, and expected component lifetime periods.

ii. Fuel, Electricity, and Hydrogen Costs

The annual fuel cost for operating a diesel-fueled ICE vehicle is a function of its yearly fuel consumption and the cost of diesel fuel. The yearly fuel consumption is described in DRIA Chapter 2.3.4.3. We used the DOE Energy Information Administration's (EIA) Annual Energy Outlook (AEO) 2022 transportation sector reference case projection for diesel fuel for on-road use for diesel prices.[495] This value includes Federal and State taxes but excludes county and local taxes. The average annual fuel cost is averaged over a 10-year period.

The annual electricity cost for operating a HD electric vehicle is a function of the electricity price, daily energy consumption of the vehicle, and number of operating days in a year. In HD TRUCS, we used the DOE EIA AEO 2022 reference case commercial electricity end-use rate projection.[496] We selected this value instead of the transportation end use prices in AEO because those are similar to the prices for the residential sector, which implies they may be more relevant to light-duty vehicle charging than commercial truck charging.

For the purposes of the HD TRUCS analysis, rather than focusing on depot hydrogen fueling infrastructure costs that would be incurred upfront, we included infrastructure costs in our per-kilogram retail price of hydrogen. The retail price of hydrogen is the total price of hydrogen when it becomes available to the end user, including the costs of production, distribution, storage, and dispensing at a fueling station. This price per kilogram of hydrogen includes the amortization of the station capital costs. This approach is consistent with the method we use in HD TRUCS for ICE vehicles, where the equivalent diesel fuel costs are included in the diesel fuel price instead of accounting for the costs of fuel stations separately.

We acknowledge that this market is still emerging and that hydrogen fuel providers will likely pursue a diverse range of business models. For example, some businesses may sell hydrogen to fleets through a negotiated contract rather than at a flat market rate on a given day. Others may offer to absorb the infrastructure development risk for the consumer, in exchange for the ability to sell excess hydrogen to other customers and more quickly amortize the cost of building a fueling station. FCEV manufacturers may offer a ''turnkey'' solution to fleets, where they provide a vehicle with fuel as a package deal. These uncertainties are not reflected in our hydrogen price estimates presented in the DRIA.

As discussed in DRIA Chapter 1.3.2 and 1.8, large incentives are in place to reduce the price of hydrogen production, particularly from electrolytic sources. In June 2021, DOE launched a Hydrogen Shot goal to reduce the cost of renewable hydrogen

[485] Burnham, A., Gohlke, D., Rush, L., Stephens, T., Zhou, Y., Delucchi, M.A., Birky, A., Hunter, C., Lin, Z., Ou, S., Xie, F., Proctor, C., Wiryadinata, S., Liu, N., Boloor, M. ''Comprehensive Total Cost of Ownership Quantification for Vehicles with Different Size Classes and Powertrains''. Argonne National Laboratory. April 1, 2021. Available online: *https://publications.anl.gov/anlpubs/2021/05/167399.pdf.*

[486] Hunter, Chad, Michael Penev, Evan Reznicek, Jason Lustbader, Alicia Birkby, and Chen Zhang. ''Spatial and Temporal Analysis of the Total Cost of Ownership for Class 8 Tractors and Class 4 Parcel Delivery Trucks''. National Renewable Energy Lab. September 2021. Available online: *https://www.nrel.gov/docs/fy21osti/71796.pdf.*

[487] Burke, Andrew, Marshall Miller, Anish Sinha, et. al. ''Evaluation of the Economics of Battery-Electric and Fuel Cell Trucks and Buses: Methods, Issues, and Results''. August 1, 2022. Available online: *https://escholarship.org/uc/item/1g89p8dn.*

[488] Wang, G., Miller, M., and Fulton, L.'' Estimating Maintenance and Repair Costs for Battery Electric and Fuel Cell Heavy Duty Trucks, 2022. Available online: *https://escholarship.org/content/qt36c08395/qt36c08395_noSplash_589098e470b036b3010eae00f3b7b618.pdf?t=r6zwjb.*

[489] Burnham, A., Gohlke, D., Rush, L., Stephens, T., Zhou, Y., Delucchi, M.A., Birky, A., Hunter, C., Lin, Z., Ou, S., Xie, F., Proctor, C., Wiryadinata, S., Liu, N., Boloor, M. ''Comprehensive Total Cost of Ownership Quantification for Vehicles with Different Size Classes and Powertrains''. Argonne National Laboratory. April 1, 2021. Available online: *https://publications.anl.gov/anlpubs/2021/05/167399.pdf.*

[490] Type C BEV school bus battery warranty range five to fifteen years according to *https://www.nyapt.org/resources/Documents/WRI_ESB-Buyers-Guide_US-Market_2022.pdf.* The Freightliner electric walk-in van includes an eight year battery warranty according to *https://www.electricwalkinvan.com/wp-content/uploads/2022/05/MT50e-specifications-2022.pdf.*

[491] Basma, Hussein, Charbel Mansour, Marc Haddad, Maroun Nemer, Pascal Stabat. ''Comprehensive energy modeling methodology for battery electric buses''. Energy: Volume 207, 15 September 2020, 118241. Available online: *https://www.sciencedirect.com/science/article/pii/S0360544220313487.*

[492] Bae, SH., Park, J.W., Lee, S.H. ''Optimal SOC Reference Based Active Cell Balancing on a Common Energy Bus of Battery'' Available online: *http://koreascience.or.kr/article/JAKO201709641401357.pdf.*

[493] Azad, F.S., Ahasan Habib, A.K.M., Rahman, A., Ahmed I. ''Active cell balancing of Li-Ion batteries using single capacitor and single LC series resonant circuit.'' *https://beei.org/index.php/EEI/article/viewFile/1944/1491.*

[494] ''How to Improve EV Battery Performance in Cold Weather'' Accessed on March 31, 2023. *https://www.worktruckonline.com/10176367/how-to-improve-ev-battery-performance-in-cold-weather.*

[495] U.S. Energy Information Administration. Annual Energy Outlook 2022. Last accessed on 9/28/2022 at *https://www.eia.gov/outlooks/aeo/data/browser/#/?id=3-AEO2022&cases=ref2022~highmacro~lowmacro~highprice~lowprice~highogs~lowogs~hirencst~lorencst~aeo2019ref&sourcekey=0.*

[496] U.S. Department of Energy, Energy Information Administration. Annual Energy Outlook 2022, Table 8: Electricity Supply, Disposition, Prices, and Emissions. September 21, 2022. Available online: *https://www.eia.gov/outlooks/aeo/data/browser/#/?id=8-AEO2022&cases=ref2022&sourcekey=0.*

production by 80 percent to $1 per kilogram in one decade.[497] The BIL and IRA included funding for several hydrogen programs to accelerate progress towards the Hydrogen Shot and jumpstart the hydrogen market in the U.S.

For example, the BIL requires development of a National Clean Hydrogen Strategy and Roadmap. In September 2022, DOE released a draft of a holistic plan that shows how low-GHG hydrogen can help reduce emissions throughout the country by about 10 percent by 2050 relative to 2005 levels.[498] DRIA Chapter 2.5.3.1 further discusses DOE's National Clean Hydrogen Strategy and Roadmap.

Recent analysis from ANL using BEAN includes a hydrogen price of $4.37 per gallon diesel equivalent (gde) in 2030,[499] which equates to roughly $3.92 per kg hydrogen.[500] [501] This analysis was published after the IRA was passed, and reflects a lower H2 price in 2030 than was in the previous year's analysis.[502] This price is at the low end of the range published in DOE's ''Pathways to Commercial Liftoff'' report on Clean Hydrogen (''Liftoff Report''), which projects that heavy-duty road transport can expect to pay a retail price of between $4 and $5 per kg of hydrogen in 2030 if advances in distribution and storage are commercialized.[503] This price incorporates BIL and IRA incentives for hydrogen.[504] Other DOE estimates prior to the IRA ranged from $6-$7 per kg in 2030, inclusive of production, delivery, and dispensing, with the range representing uncertainty in the assumed rate of technological progress.[505] [506] [507]

Other available estimates explore clean hydrogen production costs alone. For example, Rhodium Group found a hydrogen producer price of $0.39–1.92 per kg, including the IRA hydrogen production tax credit and assuming the use of utility-scale solar to produce hydrogen.[508] McKinsey projected green hydrogen costs of roughly $1.30–2.30 per kg in 2030, produced using alkaline electrolyzers. Their analysis did not mention the IRA. It showed lower costs for blue and grey hydrogen in 2030 before green hydrogen out-competes both by around 2040.[509] An ICCT estimate of average hydrogen production costs in 2030 is closer to $3.10 per kg, but their analysis did not consider IRA impacts.[510]

According to the Hydrogen Council, increasing the scale and rate of use of hydrogen across sectors could substantially reduce the costs of local distribution. As trucking capacity increases and the use, size, and density of refueling stations increases, equipment manufacturing costs could decline. For example, they suggest that 2020 distribution costs of about $5–6 per kg could decline by approximately 80 percent to get to $1–1.50 per kg in 2030.[511] A 2018 DOE document details similar opportunities to reach $2 per kg in distribution and dispensing costs. In addition to learning and economies of scale associated with scaled use, they suggest that potential research and development advancements related to the efficiency and reliability of components could help meet related DOE price targets.[512]

As further explained in DRIA Chapter 2.5.3.1, for use in HD TRUCS, we projected the future hydrogen prices shown in Table II–18 for 2027–2030 and beyond. These values are based on ANL BEAN values and are in line with price projections in DOE's Liftoff Report that consider the impacts of BIL and IRA. We converted the $/kg estimates for 2025 and 2030 included in BEAN to dollar per kg by using the conversion factor of 1 gallon of diesel is equivalent to 1.116 kg of hydrogen, based on its lower heating value. We rounded up to the nearest $0.50 increment given the uncertainty of projections, and then interpolated for 2027 to 2029. Prices for 2030 and beyond are held constant in BEAN and in HD TRUCS.

[497] Satyapal, Sunita. ''2022 AMR Plenary Session''. U.S. Department of Energy, Hydrogen and Fuel Cell Technologies Office. June 6, 2022. Available online: *https://www.energy.gov/sites/default/files/2022-06/hfto-amr-plenary-satyapal-2022-1.pdf.*

[498] U.S. Department of Energy. ''DOE National Clean Hydrogen Strategy and Roadmap''. Draft September 2022. Available online: *https://www.hydrogen.energy.gov/pdfs/clean-hydrogen-strategy-roadmap.pdf.*

[499] Islam, Ehsan Sabri, Ram Vijayagopal, Aymeric Rousseau. ''A Comprehensive Simulation Study to Evaluate Future Vehicle Energy and Cost Reduction Potential'', *Report to the U.S. Department of Energy, Contract ANL/ESD–22/6,* October 2022. See Medium- and heavy-duty vehicles (techno-economic analysis with BEAN). Available online: *https://vms.taps.anl.gov/research-highlights/u-s-doe-vto-hfto-r-d-benefits/.*

[500] The conversion used was 1 gallon of diesel is equivalent to 1.116 kg of hydrogen, based on a lower heating value.

[501] Hydrogen Tools ''Energy Equivalency of Fuels (LHV)''. U.S. Department of Energy: Pacific Northwest National Laboratory. Available online: *https://h2tools.org/hyarc/hydrogen-data/energy-equivalency-fuels-lhv.*

[502] Islam, Ehsan Sabri. Ram Vijayagopal, Ayman Moawad, Namdoo Kim, Benjamin Dupont, Daniela Nieto Prada, Aymeric Rousseau, ''A Detailed Vehicle Modeling & Simulation Study Quantifying Energy Consumption and Cost Reduction of Advanced Vehicle Technologies Through 2050,'' *Report to the U.S. Department of Energy, Contract ANL/ESD–21/10,* October 2021. See previous reports and analysis: 2021. Available online: *https://vms.taps.anl.gov/research-highlights/u-s-doe-vto-hfto-r-d-benefits/.*

[503] U.S. Department of Energy. ''Pathways to Commercial Liftoff: Clean Hydrogen''. March 2023. Available online: *https://liftoff.energy.gov/wp-content/uploads/2023/03/20230320-Liftoff-Clean-H2-vPUB.pdf.*

[504] The Liftoff Report and draft National Strategy say that fuel cell trucks and buses can be one of the first new sectors to adopt hydrogen because of a higher ''willingness to pay'' for fuel (*i.e.,* a threshold price at which they can remain competitive) compared to other hard-to-decarbonize sectors like chemicals and steel.

[505] Islam, Ehsan Sabri., Ram Vijayagopal, Ayman Moawad, Namdoo Kim, Benjamin Dupont, Daniela Nieto Prada, Aymeric Rousseau, ''A Detailed Vehicle Modeling & Simulation Study Quantifying Energy Consumption and Cost Reduction of Advanced Vehicle Technologies Through 2050,'' *Report to the U.S. Department of Energy, Contract ANL/ESD–21/10,* October 2021. See previous reports and analysis: 2021. Available online: *https://vms.taps.anl.gov/research-highlights/u-s-doe-vto-hfto-r-d-benefits/.*

[506] Hunter, Chad, Michael Penev, Evan Reznicek, Jason Lustbader, Alicia Birkby, and Chen Zhang. ''Spatial and Temporal Analysis of the Total Cost of Ownership for Class 8 Tractors and Class 4 Parcel Delivery Trucks''. National Renewable Energy Lab. September 2021. Available online: *https://www.nrel.gov/docs/fy21osti/71796.pdf.*

[507] Ledna et al. ''Decarbonizing Medium- & Heavy-Duty On-Road Vehicles: Zero-Emission Vehicles Cost Analysis''. U.S. Department of Energy, National Renewable Energy Laboratory. March 2022. Available online: *https://www.nrel.gov/docs/fy22osti/82081.pdf.*

[508] Larsen, John et al. ''Assessing the Climate and Clean Energy Provisions in the Inflation Reduction Act''. Rhodium Group. August 12, 2022. Available online: *https://rhg.com/research/climate-clean-energy-inflation-reduction-act/.*

[509] Heid, Bernd et al. ''Five charts on hydrogen's role in a net-zero future''. McKinsey Sustainability. October 25, 2022. Available online: *https://www.mckinsey.com/capabilities/sustainability/our-insights/five-charts-on-hydrogens-role-in-a-net-zero-future.*

[510] Zhou, Yuanrong, et al. ''Current and future cost of e-kerosene in the United States and Europe''. Working Paper 2022–14: The International Council on Clean Transportation. March 2022. Available online: *https://theicct.org/wp-content/uploads/2022/02/fuels-us-europe-current-future-cost-ekerosene-us-europe-mar22.pdf.*

[511] Hydrogen Council. ''Path to hydrogen competitiveness: A cost perspective''. January 20, 2020. Available online: *https://hydrogencouncil.com/wp-content/uploads/2020/01/Path-to-Hydrogen-Competitiveness_Full-Study-1.pdf.*

[512] Rustagi, Neha et al. Record 18003: ''Current Status of Hydrogen Delivery and Dispensing Costs and Pathways to Future Cost Reductions''. U.S. Department of Energy. December 17, 2018. Available online: *https://www.hydrogen.energy.gov/pdfs/18003_current_status_hydrogen_delivery_dispensing_costs.pdf.*

TABLE II–18—PRICE OF HYDROGEN FOR CYS 2027–2030+

[2021$]

	2027	2028	2029	2030 and beyond
$/kg H2	6.10	5.40	4.70	4.00

We request comment on our approach and assessment of future fuel, electricity, and hydrogen prices for the transportation sector.

6. Payback

After assessing the suitability of the technology and costs associated with ZEVs, a payback calculation was performed on each of the 101 HD TRUCS vehicles for the BEV technology and FCEV technology that we were considering for the technology packages for each use case for each MY in the MY 2027–2032 timeframe. The payback period was calculated by determining the number of years that it would take for the annual operational savings of a ZEV to offset the incremental upfront purchase price of a BEV or FCEV (after accounting for the IRA section 13502 battery tax credit and IRA section 13403 vehicle tax credit as described in DRIA Chapters 2.4.3.1 and 2.4.3.5, respectively) and charging infrastructure costs (for BEVs) when compared to purchasing a comparable ICE vehicle. The ICE vehicle and ZEV costs calculated include the retail price equivalent (RPE) multiplier of 1.42 to include both direct and indirect manufacturing costs, as discussed further in DRIA Chapter 3. The operating costs include the diesel, hydrogen or electricity costs, DEF costs, and the maintenance and repair costs. The payback results are shown in Table 2–75 and Table 2–76 for BEVs for MY 2027 and MY 2032, and in Table 2–77 for FCEVs for MY 2032 of DRIA Chapter 2.

F. Proposed Standards

Similar to the approach we used to support the feasibility of the HD GHG Phase 2 vehicle CO_2 emission standards, we developed technology packages that, on average, would meet each of the proposed standards for each regulatory subcategory of vocational vehicles and tractors after considering the various factors described in this section, including technology costs for manufacturers and costs to purchasers. We applied these technology packages to nationwide production volumes to support the proposed Phase 3 GHG vehicle standards. The technology packages utilize the averaging portion of the longstanding ABT program, and we project manufacturers would produce a mix of HD vehicles that utilize ICE-powered vehicle technologies and ZEV technologies, with specific adoption rates for each regulatory subcategory of vocational vehicles and tractors for each MY. Note that we have analyzed a technology pathway to support the feasibility and appropriateness of each proposed level of stringency for each proposed standard, but manufacturers would be able to use a combination of HD engine or vehicle GHG-reducing technologies, including zero-emission and ICE technologies, to meet the standards.

The proposed standards are shown in Table II–19 and Table II–20 for vocational vehicles and Table II–21and Table II–22 for tractors. We request comment and data on our proposal as well as comment and data supporting more or less stringent HD vehicle GHG standards than those proposed, as specified in Section II.H. We also request comment on setting additional new HD vehicle GHG standards in MYs 2033 through 2035 that are more progressively stringent than the MY 2032 standards and that either continue the approach and trajectory of the proposed standards or utilize a different approach and trajectory that we solicited comment on in this proposal.

The approach we used to select the proposed standards, described in this Section II, does not specifically include accounting for ZEV adoption rates that would result from compliance with the California ACT program. The approach we used developed ZEV technology adoption rates on a nationwide basis. EPA granted the California ACT waiver request on March 30, 2023, which did not allow sufficient time for us to consider an alternative approach for this proposal. With the granting of the California ACT waiver, we intend to consider for the final rule how vehicles sold to meet the ACT requirement in California and other states that may adopt it under CAA section 177 would impact or be accounted for in the standard setting approach described in this Section II. For example, we may adjust our reference case to reflect the ZEV levels projected from ACT in California and other states. We also may consider increasing the technology adoption rates in the technology packages and correspondingly increase the stringency of the proposed Phase 3 emission standards to account for the incremental difference in the projected ZEV adoption levels from the proposed Phase 3 emission standards and the adoption levels projected from ACT in those states. We welcome comment on how to consider this ACT in our proposed approach or in other approaches.

TABLE II–19—PROPOSED MY 2027 THROUGH 2032+ VOCATIONAL VEHICLE CO_2 EMISSION STANDARDS

[Grams/ton-mile]

Model year	Subcategory	CI light heavy	CI medium heavy	CI heavy heavy	SI light heavy	SI medium heavy
2027	Urban	294	213	232	340	252
	Multi-Purpose	257	190	193	299	223
	Regional	218	173	152	246	202
2028	Urban	275	209	228	321	248
	Multi-Purpose	238	186	189	280	219
	Regional	199	169	148	227	198
2029	Urban	255	202	225	301	241
	Multi-Purpose	218	179	186	260	212

TABLE II–19—PROPOSED MY 2027 THROUGH 2032+ VOCATIONAL VEHICLE CO_2 EMISSION STANDARDS—Continued

[Grams/ton-mile]

Model year	Subcategory	CI light heavy	CI medium heavy	CI heavy heavy	SI light heavy	SI medium heavy
	Regional	179	162	145	207	191
2030	Urban	238	195	200	284	234
	Multi-Purpose	201	172	161	243	205
	Regional	162	155	120	190	184
2031	Urban	219	188	193	265	227
	Multi-Purpose	182	165	154	224	198
	Regional	143	148	113	171	177
2032 and later	Urban	179	176	177	225	215
	Multi-Purpose	142	153	138	184	186
	Regional	103	136	97	131	165

TABLE II–20—PROPOSED MY 2027 THROUGH 2032+ OPTIONAL CUSTOM CHASSIS VOCATIONAL VEHICLE CO_2 EMISSION STANDARDS

[Grams/ton-mile]

Optional custom chassis vehicle category	MY 2027	MY 2028	MY 2029	MY 2030	MY 2031	MY 2032 and later
School Bus	190	182	176	168	163	149
Other Bus	286	269	255	237	220	189
Coach Bus	205	205	205	185	164	154
Refuse Hauler	253	241	232	221	212	191
Concrete Mixer	259	250	240	231	224	205
Motor home	226	226	226	226	226	226
Mixed-use vehicle	316	316	316	316	316	316
Emergency vehicle	319	319	319	319	319	319

TABLE II–21—PROPOSED MY 2027 THROUGH MY 2032+ TRACTOR CO_2 EMISSION STANDARDS

[Grams/ton-mile]

Model year	Roof height	Class 7 all cab styles	Class 8 day cab	Class 8 sleeper cab
2027	Low Roof	86.6	66.1	64.1
	Mid Roof	93.1	70.2	69.6
	High Roof	90.0	68.1	64.3
2028	Low Roof	84.7	64.6	64.1
	Mid Roof	91.0	68.6	69.6
	High Roof	88.0	66.6	64.3
2029	Low Roof	81.8	62.4	64.1
	Mid Roof	87.9	66.3	69.6
	High Roof	85.0	64.3	64.3
2030	Low Roof	77.0	58.7	57.7
	Mid Roof	82.7	62.4	62.6
	High Roof	80.0	60.6	57.9
2031	Low Roof	67.3	51.4	51.3
	Mid Roof	72.4	54.6	55.7
	High Roof	70.0	53.0	51.4
2032 and Later	Low Roof	63.5	48.4	48.1
	Mid Roof	68.2	51.5	52.2
	High Roof	66.0	50.0	48.2

TABLE II–22—PROPOSED MY 2027 THROUGH MY 2032+ HEAVY-HAUL TRACTOR CO_2 EMISSION STANDARDS

[Grams/ton-mile]

Model year	CO_2 emission standards
2027	48.3
2028	48.3
2029	48.3
2030	43.0

TABLE II–22—PROPOSED MY 2027 THROUGH MY 2032+ HEAVY-HAUL TRACTOR CO_2 EMISSION STANDARDS—Continued

[Grams/ton-mile]

Model year	CO_2 emission standards
2031	42.5
2032 and Later	41.1

We are proposing new CO_2 emission standards using the regulatory subcategories we adopted in HD GHG Phase 2, as discussed in Section II.C. As we discuss later in this subsection, the fraction of ZEVs and fraction of ICE vehicles in the technology packages varies across the 101 HD TRUCS vehicle types and thus in the regulatory subcategories. We recognize there may be different regulatory structures that could be used to reduce GHG emissions from the HD vehicles.

During the development of this proposed action, EPA has heard requests from several stakeholders that EPA consider establishing CO_2 standards for specific vehicle applications (*e.g.,* school buses, urban buses, pick-up and delivery vehicles, drayage trucks, etc.), as a complement to CO_2 emission standards that utilize the existing HD GHG Phase 2 program structure. There are several reasons stakeholders have explained for asking EPA to consider this approach. One reason is to target specific applications which may be the most suited for more stringent CO_2 standards at a more rapid pace than a broader regulatory subcategory. For example, a pick-up and delivery application may be more suitable for faster adoption of BEV technology than the broader subcategory of medium heavy-duty vocational vehicles. This approach could further support the industry and marketplace focusing resources on specific applications in the near term in response to more stringent EPA standards, rather than potentially spreading those resources across a broader range of products. Another reason some stakeholders suggested EPA consider an application-specific approach would be to accelerate the deployment of ZEVs that are concentrated in frontline communities to reduce air pollution more quickly in those communities.

We note the current HD GHG Phase 2 program structure includes standards at broad vehicle subcategory levels (*e.g.,* light heavy-duty vocational vehicles, medium heavy-duty vocational vehicles, etc.) as well as optional CO_2 emission standards for seven specific custom chassis applications (*e.g.,* emergency vehicles, motor homes, cement mixers, school buses). It is important to note the suggestions from stakeholders for EPA to establish application-specific standards for some heavy-duty vehicles to accelerate emission reductions in the Phase 3 program are much different than the reasons EPA established the HD GHG Phase 2 optional custom chassis standards. EPA established the optional custom chassis program for a number of reasons, including: a recognition there are manufacturers who produce specialized heavy-duty vocational vehicles where some of the technologies EPA used for the primary program standards would be unsuited for use, concern that the primary program drive cycles are either unrepresentative or unsuitable for certain specialized heavy-duty vocational vehicles, concern that some manufacturers of these specialized vocational vehicles have limited product offerings such that the primary program's emissions averaging is not of practical value as a compliance flexibility, and also concern regarding the appropriateness of the primary program's vocational vehicle standards as applied to certain specialized/custom vocational vehicles (See 81 FR 73531 and 81 FR 73686, October 25, 2016).

Potential challenges EPA recognizes with an application-specific, more stringent CO_2 standard approach include determining what criteria EPA would use to establish application-specific standards, how such standards would fit in the overall Phase 3 program structure, and the difficulty in defining some applications. For example, a drayage truck in general can be any Class 8 tractor (both sleeper cab and day cab) that is used to move shipping containers to and from ports from other locations, including rail yards, shipping terminals, or other destinations. A drayage tractor is not a unique application nor do these tractors contain unique design features to differentiate them from other tractors—nearly any tractor can be used for drayage operation. Nevertheless, in consideration of potentially targeting specific applications most suited for more stringent CO_2 standards at a more rapid pace than a broader regulatory subcategory, EPA requests comment on a standards structure for Phase 3 which would establish unique, mandatory, application-specific standards for some subset of heavy-duty vehicle applications. EPA requests comment on what data, what program structure, what applications, and what criteria EPA should consider for designing application-specific standards. EPA also requests comment on how the application-specific CO_2 standards would interact with the broader Phase 3 program structure EPA has included in this proposal, including the CO_2 emissions averaging, banking, and trading program. For example, if EPA were to separate these applications and apply more stringent standards, EPA requests comment on whether emission credits should be allowed to be averaged across the primary Phase 3 program and the application specific standards, and if yes, what limits if any should apply to those standards. Under this example, EPA may consider that allowing credits to flow into an application-specific category could undermine the reasons for establishing such a category (to accelerate the application of technology and accelerate emission reductions), while allowing credits generated within an application specific category to flow into the primary program may provide incentive for even greater reductions from the application-specific category.

To support that the proposed standards are achievable through the technology pathway projected in the technology packages, the proposed CO_2 standards for each subcategory were determined in two steps giving consideration to costs, lead time, and other factors, as described in this section and Section II.G. First, we determined the technology packages that include ZEVs and ICE vehicles with GHG-reducing technologies for each of the vocational vehicle and tractor subcategories as discussed in Section II.F.1. Then we determined the numeric level of the proposed standards as discussed in Sections II.F.2 and II.F.3.

1. Technology Adoption Rates in the Technology Packages

We based the proposed standards on technology packages that include both ICE vehicle and ZEV technologies. In our analysis, the ICE vehicles include a suite of technologies that represent a vehicle that meets the existing MY 2027 Phase 2 CO_2 emission standards. These technologies exist today and continue to evolve to improve the efficiency of the engine, transmission, drivetrain, aerodynamics, and tire rolling resistance in HD vehicles and therefore reduce their CO_2 emissions. There also may be opportunity for further adoption of these Phase 2 ICE technologies beyond the adoption rates used in the HD GHG Phase 2 rule. In addition, the heavy-duty industry continues to develop CO_2-reducing technologies such as hybrid powertrains and H2–ICE powered vehicles.

In the transportation sector, new technology adoption rates often follow an S-shape. As discussed in the preamble to the HD GHG Phase 2 final rule, the adoption rates for a specific technology are initially slow, followed by a rapid adoption period, then leveling off as the market saturates, and not always at 100 percent.[513] For this proposal, we developed a method to project adoption rates of BEVs and FCEVs in the HD vehicle market after considering methods in the literature. Our adoption function, and methods considered and explored in the formulation of the method used in this proposal, are described in DRIA Chapter 2.7.9. As stated there, given information currently available and our experience with the HD vehicle industry, when purchasing a new vehicle, we believe that the payback period is the most

[513] 81 FR 73558, Oct 25, 2016.

relevant metric to determine adoption rates in the HD vehicle industry.

The ZEV adoption rate schedule, shown in Table II–23, shows that when the payback is immediate, we project up to 80 percent of a manufacturer's fleet to be ZEV, with diminishing adoption as the payback period increases.[514] The schedule was used to assign ZEV adoption rates to each of the 101 HD TRUCS vehicle types based on its payback period for MYs 2027 and 2032.

We phased in the proposed standards gradually between MYs 2027 and 2032 to address potential lead time concerns associated with feasibility for manufacturers to deploy ZEV technologies that include consideration of time necessary to ramp up battery production, including the need to increase the availability of critical raw materials and expand battery production facilities, as discussed in Section II.D.2.ii. We also phased in the proposed standards recognizing that it will take time for installation of EVSE by the BEV purchasers. We project BEV adoption as early as MY 2027, and we project adoption of FCEVs in the technology packages starting in MY 2030 for select applications that travel longer distances and/or carry heavier loads (*i.e.,* coach buses, heavy-haul tractors, sleeper cab tractors, and day cab tractors). There has been only limited development of FCEVs for the HD market to date, therefore our assessment is that it would be appropriate to provide manufacturers with additional lead time to design, develop, and manufacture FCEV models, but that it would be feasible by MY 2030. With substantial Federal investment in low-GHG hydrogen production (see DRIA Chapter 1.8.2), we anticipate that the price of hydrogen fuel could drop enough by 2030 to make HD FCEVs cost-competitive with comparable ICE vehicles for some duty cycles. We also note that the hydrogen infrastructure is expected to need additional time to further develop, as discussed in greater detail in DRIA Chapter 1.8, but we expect the refueling needs can be met by MY 2030. We also recognize the impact regulations can have on technology and recharging/refueling infrastructure development and deployment. Thus we request comment and data on our proposed adoption rate, including schedule and methods. We also request comment and data to support other adoption rate schedules; see also Section II.H.

TABLE II–23—ADOPTION RATE SCHEDULE IN HD TRUCS

Payback (yr)	MY 2027 adoption rates for BEVs (%)	MY 2032 adoption rates for BEVs and FCEVs (%)
<0	80	80
0–1	55	55
1–2	32	45
2–4	18	35
4–7	13	25
7–10	10	20
10–15	5	15
>15	0	5

We applied an additional constraint within HD TRUCS that limited the maximum penetration rate to 80 percent for any given vehicle type. This conservative limit was developed after consideration of the actual needs of the purchasers related to two primary areas of our analysis. First, this 80 percent volume limit takes into account that we sized the batteries, power electronics, e-motors, and infrastructure for each vehicle type based on the 90th percentile of the average VMT. We utilize this technical assessment approach because we do not expect heavy-duty OEMs to design ZEV models for the 100th percentile VMT daily use case for vehicle applications, as this could significantly increase the ZEV powertrain size, weight, and costs for a ZEV application for all users, when only a relatively small part of the market would need such capabilities. Therefore, the ZEVs we analyzed and have used for the feasibility and cost projections for this proposal are likely not appropriate for 100 percent of the vehicle applications in the real-world. Our second consideration for including an 80 percent volume limit for ZEVs is that we recognize there is a wide variety of real-world operation even for the same type of vehicle. For example, some owners may not have the ability to install charging infrastructure at their facility, or some vehicles may need to be operational 24 hours a day. Under our proposed standards, ICE vehicles would continue to be available to address these specific vehicle applications. We request comment, data, and analysis on both of these considerations and our use of an 80 percent volume limit. Our request for comment includes a request for data to inform an assessment of the distribution of daily miles traveled and the distribution of the number of hours available daily to charge for each of the vehicle types that we could use to update a constraint like this in the final rulemaking analysis.

After the technology assessment, as described in Section II.D.4 and DRIA Chapter 2, and payback analysis, as described in Section II.E.6 and DRIA Chapter 2.8.2, EPA determined the ICE vehicle and ZEV adoption rates for each regulatory subcategory. We first determined the ZEV adoption rates projected for each of the 101 vehicle types for MYs 2027 and 2032, which can be found in DRIA Chapter 2.8.3.1. We then aggregated the projected ZEV adoption rates for the specific vehicle types into their respective regulatory subcategories relative to the vehicle's sales weighting, as described in DRIA Chapter 2.9.1. The resulting projected ZEV adoption rates (shown in Table II–24) and projected ICE vehicle adoption rates that achieve a level of CO_2 emissions performance equal to the existing MY 2027 emission standards (shown in Table II–21) were built into our technology packages. We request comment and data on our projected adoption rates in the technology packages as well as data supporting higher or lower adoption rates than the projected levels. We also request comment on projecting adoption rates out through MY 2035.

TABLE II–24—PROJECTED ZEV ADOPTION RATES FOR MYS 2027–2032 TECHNOLOGY PACKAGES

Regulatory subcategory	MY 2027 (%)	MY 2028 (%)	MY 2029 (%)	MY 2030 (%)	MY 2031 (%)	MY 2032 (%)
LHD Vocational	22	28	34	39	45	57
MHD Vocational	19	21	24	27	30	35
HHD Vocational	16	18	19	30	33	40
MHD All Cab and HHD Day Cab Tractors	10	12	15	20	30	34
Sleeper Cab Tractors	0	0	0	10	20	25
Heavy Haul Tractors	0	0	0	11	12	15

[514] See DRIA Chapter 2.7.9 for additional information on the development of the adoption rate schedule for the technology packages for the proposed standards.

TABLE II–24—PROJECTED ZEV ADOPTION RATES FOR MYS 2027–2032 TECHNOLOGY PACKAGES—Continued

Regulatory subcategory	MY 2027 (%)	MY 2028 (%)	MY 2029 (%)	MY 2030 (%)	MY 2031 (%)	MY 2032 (%)
Optional Custom Chassis: School Bus	30	33	35	38	40	45
Optional Custom Chassis: Other Bus	0	6	11	17	23	34
Optional Custom Chassis: Coach Bus[515]	0	0	0	10	20	25
Optional Custom Chassis: Refuse Hauler	15	19	22	26	29	36
Optional Custom Chassis: Concrete Mixer	18	21	24	27	29	35
Optional Custom Chassis: Emergency Vehicles	0	0	0	0	0	0
Optional Custom Chassis: Recreational Vehicles	0	0	0	0	0	0
Optional Custom Chassis: Mixed Use	0	0	0	0	0	0

TABLE II–25—PROJECTED ADOPTION RATES FOR MYS 2027–2032 ICE VEHICLES WITH CO_2-REDUCING TECHNOLOGIES IN THE TECHNOLOGY PACKAGES

Regulatory subcategory	MY 2027 (%)	MY 2028 (%)	MY 2029 (%)	MY 2030 (%)	MY 2031 (%)	MY 2032 (%)
LHD Vocational	78	72	66	61	55	43
MHD Vocational	81	79	76	73	70	65
HHD Vocational	84	82	81	70	67	60
MHD All Cab and HHD Day Cab Tractors	90	88	85	80	70	66
Sleeper Cab Tractors	100	100	100	90	80	75
Heavy Haul Tractors	100	100	100	89	88	85
Optional Custom Chassis: School Bus	70	67	65	62	60	55
Optional Custom Chassis: Other Bus	100	94	89	83	77	66
Optional Custom Chassis: Coach Bus[516]	100	100	100	90	80	75
Optional Custom Chassis: Refuse Hauler	85	81	78	74	71	64
Optional Custom Chassis: Concrete Mixer	82	79	76	73	71	65
Optional Custom Chassis: Emergency Vehicles	100	100	100	100	100	100
Optional Custom Chassis: Recreational Vehicles	100	100	100	100	100	100
Optional Custom Chassis: Mixed Use	100	100	100	100	100	100

2. Calculation of the Proposed Tractor Standards

The proposed CO_2 emission standards for the tractor subcategories are calculated by determining the CO_2 emissions from a technology package that consists of both ICE-powered vehicles and ZEVs. The projected fraction of ZEVs that emit zero grams CO_2/ton-mile at the tailpipe are shown in Table II–24. The remaining fraction of vehicles in the technology package are ICE-powered vehicles that include the technologies listed in Table II–1 (reflecting the GEM inputs for the individual technologies that make up the technology packages that meets the existing MY 2027 CO_2 tractor emission standards). Thus, in the technology packages, the ICE-powered vehicles emit at the applicable existing MY 2027 CO_2 emission standards, as shown in Table II–26. We request comment on ICE vehicle technologies that could support more stringent standards than those proposed.

The proposed CO_2 emission standards for each model year are calculated by multiplying the fraction of ICE-powered vehicles in each technology package by the applicable existing MY 2027 CO_2 emission standards. The proposed standards are presented in Section II.F.

TABLE II–26—EXISTING MY 2027 AND LATER TRACTOR CO_2 EMISSION STANDARDS

[Grams/ton-mile]

	Class 7 All cab styles	Class 8 Day cab	Class 8 Sleeper cab	Heavy-haul
Low Roof	96.2	73.4	64.1	48.3
Mid Roof	103.4	78.0	69.6	
High Roof	100.0	75.7	64.3	

3. Calculation of the Proposed Standards for Vocational Vehicles

The proposed CO_2 emission standards for the vocational vehicles regulatory subcategories are calculated by determining the CO_2 emissions from a technology package that consists of both ICE-powered vehicles and ZEVs. The projected fraction of ZEVs that emit zero grams CO_2/ton-mile at the tailpipe are shown in Table II–24. The remaining fraction of vehicles in the technology package are ICE-powered vehicles that include the technologies listed in Table II–2 (reflecting the GEM inputs for the individual technologies that make up the technology packages that meets the existing MY 2027 CO_2 vocational vehicles emission standards). We request comment on ICE vehicle technologies that could support more stringent standards than those proposed.

[515] We are proposing to use the same adoption rates projected for sleeper cab tractors, which are also projected to be FCEVs in MYs 2030–2032.

[516] We are proposing to use the same adoption rates projected for sleeper cab tractors, which are also projected to be FCEVs in MYs 2030–2032.

As discussed in Section II.C, vocational vehicle CO_2 emission standards are subdivided by weight class, SI-powered or CI-powered vehicles, and by operation. There are a total of 15 different vocational vehicle standards in the primary program for each model year, in addition to the optional custom chassis standards. The existing MY 2027 vocational vehicle emission standards are shown in Table II–27 (which, like tractors, are what the ICE-powered vehicles emit at in the proposed technology packages). The HD GHG Phase 2 structure enables the technologies that perform best during urban driving or the technologies that perform best at highway driving to each be properly recognized over the appropriate drive cycles. The HD GHG Phase 2 structure was developed recognizing that there is not a single package of engine, transmission, and driveline technologies that is suitable for all ICE-powered vocational vehicle applications. In this proposal, we are continuing the current approach of deeming tailpipe emissions of regulated GHG pollutants (including CO_2) to be zero from electric vehicles and hydrogen fuel cell vehicles.[517] Therefore, the need to recognize the variety in vocational vehicle CO_2 emissions may no longer be necessary for ZEVs because ZEVs are deemed to have zero CO_2 emissions. Similarly, the existing SI and CI distinction within vocational vehicle regulatory subcategory structure is not optimal for vocational ZEVs because they cannot be technically described as either SI-powered or CI-powered.

TABLE II–27—EXISTING MY 2027 AND LATER VOCATIONAL VEHICLE CO_2 EMISSION STANDARDS

[Grams/ton-mile]

	CI light heavy	CI medium heavy	CI heavy heavy	SI light heavy	SI medium heavy
Urban	367	258	269	413	297
Multi-Purpose	330	235	230	372	268
Regional	291	218	189	319	247
Optional Custom Chassis: School Bus	271				
Optional Custom Chassis: Other Bus	286				
Optional Custom Chassis: Coach Bus	205				
Optional Custom Chassis: Refuse Hauler	298				
Optional Custom Chassis: Concrete Mixer	316				
Optional Custom Chassis: Motor Home	226				
Optional Custom Chassis: Mixed-Use Vehicle	316				
Optional Custom Chassis: Emergency Vehicle	319				

Also discussed in Section II.C, the vehicle ABT program allows credits to exchange with all vehicles within a weight class. ABT CO_2 emission credits are determined using the equation in 40 CFR 1037.705. The credits are calculated based on the difference between the applicable standard for the vehicle and the vehicle's family emission limit multiplied by the vehicle's regulatory payload and useful life. For example, as shown in Table II–28, using the existing light heavy-duty vocational vehicle MY 2027 CO_2 emission standards, the amount of credit a ZEV would earn varies between 124 Mg and 177 Mg, depending on the regulatory subcategory it would be certified to. We recognize that in many cases it may not be clear to the manufacturer whether to certify the vocational ZEV to a SI or CI regulatory subcategory, *i.e.* for the manufacturer to know whether the ZEV was purchased in lieu of a comparable CI-powered or SI-powered vehicle. Furthermore, as just discussed, because ZEVs have zero CO_2vehicle exhaust emissions the programmatic basis for requiring the manufacturer to differentiate the ZEVs by operation to appropriately account for the variety of driveline configurations would not exist, though the amount of credit the ZEV would earn would depend on the regulatory subcategory selected for certification. In short, we recognize the difficulties in, and consequences of, determining which of the regulatory subcategories to which a ZEV should be certified under the existing HD GHG Phase 2 emission standards' structure for vocational vehicles. To address this concern, we are proposing a two-step approach. First, we propose to revise the ABT credit calculation regulations; this change would begin in MY 2027. Second, we derived the proposed MY 2027 and later standards accounting for the proposed changes to the ABT credit calculations. Note that BEVs, FCEVs, and H2–ICE vehicles would still be able to be certified to the vocational vehicle urban, multi-purpose, or regional standards or to the applicable optional custom chassis standards.

[517] See 40 CFR 1037.150(f) for our proposed interim provision that CO_2 emissions would be deemed to be zero, with no CO_2-related testing, for BEVs, FCEVs, and vehicles powered by H2–ICE that solely use hydrogen fuel.

TABLE II—28 EXAMPLE CO_2 EMISSION CREDIT CALCULATIONS FOR LIGHT HEAVY-DUTY (LHD) BEV/FCEVS BY REGULATORY SUBCATEGORY BASED OFF THE EXISTING MY 2027 STANDARDS

	SI LHD urban	SI LHD multi-purpose	SI LHD regional	CI LHD urban	CI LHD multi-purpose	CI LHD regional
Existing MY 2027 Standard (gCO_2/ton-mile)	413	372	319	367	330	291
CO_2 credit per BEV or FCEV (Mg)	177	159	136	157	141	124

EPA proposes to revise the definition of the variable ''Std'' in 40 CFR 1037.705 to establish a common reference emission standard for vocational vehicles with tailpipe CO_2 emissions deemed to be zero (*i.e.,* BEVs, FCEVs, and vehicles with engines fueled with pure hydrogen).[518] Beginning in MY 2027, manufacturers would use the applicable Compression-Ignition Multi-Purpose (CI MP) standard for their vehicle's corresponding weight class when calculating ABT emission credits for vocational vehicles with tailpipe CO_2 emissions deemed to be zero.[519] We selected the CI MP standard because it is the regulatory subcategory with the highest production volume in MY 2021. We also recognize a need to balance two different timing considerations concerning the potential impacts of this proposed change. First, prior to the effective date of this proposed change, there is a potential for manufacturers producing BEVs, FCEVs, and certain H2–ICE vehicles to generate larger credits than they would after this change, depending on the vocational vehicle subcategory to which a vehicle is certified. Second, we recognize that manufacturers develop their emissions compliance plans several years in advance to manage their R&D and manufacturing investments. After taking these into account, we propose that this regulation revision become effective beginning in MY 2027 to provide manufacturers with sufficient time to adjust their production plans, if necessary. We request comment on this proposed revision.

Taking the proposed change to the ZEV ABT credit calculation into account, if we calculated the proposed standards by multiplying the fraction of ICE-powered vehicles in the technology package (by model year) by the applicable existing MY 2027 CO_2 emission standards, like we did for tractors, then this would lead to a scenario where it would take different levels of ZEV adoption rates to meet the proposed standards in each regulatory subcategory than we included in our assessment. Therefore, we used an alternate approach that maintains the same level of ZEV adoption rates in each regulatory subcategory within a weight class, taking the proposed change to the ZEV ABT credit calculation into account. The equation for calculating the proposed MY 2032 vocational vehicle standards is shown in Equation II–1. This equation is used to calculate the proposed standards for each vocational vehicle regulatory subcategory, using the existing MY 2027 CI MP standard for each corresponding weight class (LH, MH, HH). Equation II–2 through Equation II–4 show how the proposed Equation II–1 would be used for each regulatory subcategory for an example model year (MY 2032). The existing MY 2027 standards can be found in Table II–27, and the projected ZEV adoption rates by model year are in Table II–24. The same equations were used for the proposed MY 2027 through 2031 standards but replacing the MY 2032 Standards and ZEV adoption rates with values for the specific model year. The results of the calculations for the MY 2032 LHD vocational vehicles are shown in Table II–29. The calculations for the other model years and vocational vehicle subcategories are shown in DRIA Chapter 2.9.

Equation II–1: Proposed Vocational Vehicle Standard Calculation

$$\text{MY 2032 Std}_{\text{RegSubcat}} = \text{Existing 2027 Std}_{\text{RegSubcat}} - (\text{MY 2027 Existing CI MP Std}_{\text{RegSubcat}} * \text{MY 2032 ZEV\%})$$

Equation II–2: Proposed Vocational Vehicle Standard Calculation Light Heavy-Duty Regulatory Subcategories for MY 2032

$$\text{MY 2032 Std}_{\text{RegSubcat}} = \text{Existing 2027 Std}_{\text{RegSubcat}} - (330\ \text{g/mi} * 57\%)$$

Equation II–3: Proposed Vocational Vehicle Standard Calculation Medium Heavy-Duty Regulatory Subcategories for MY 2032

$$\text{MY 2032 Std}_{\text{RegSubcat}} = \text{Existing 2027 Std}_{\text{RegSubcat}} - (235\ \text{g/mi} * 35\%)$$

Equation II–4: Proposed Vocational Vehicle Standard Calculation Heavy Heavy-Duty Regulatory Subcategories for MY 2032

$$\text{MY 2032 Std}_{\text{RegSubcat}} = \text{Existing 2027 Std}_{\text{RegSubcat}} - (230\ \text{g/mi} * 40\%)$$

TABLE II–29—CALCULATIONS OF THE PROPOSED MY 2032 CO_2 EMISSION STANDARDS FOR LIGHT HEAVY-DUTY (LHD) VOCATIONAL VEHICLES

	SI LHD urban	SI LHD multi-purpose	SI LHD regional	CI LHD urban	CI LHD multi-purpose	CI LHD regional
Existing MY 2027 Standard (gCO_2/ton-mile)	413	372	319	367	330	291
ZEV Adoption Rate in Technology Package	57%	57%	57%	57%	57%	57%
Proposed CO_2 Emission Standard (gCO_2/ton-mile)	225	184	131	179	142	103

The calculations for the other model years and vocational vehicle subcategories are shown in DRIA Chapter 2.9. We welcome comment on this approach to taking the proposed change to the ZEV ABT credit

[518] See the proposed updates to 40 CFR 1037.150(f).

[519] See 40 CFR 1037.105 for the compression-ignition multi-purpose CO_2 standards.

calculation into account in setting vocational vehicle standards. We also request comment alternatively on using the same approach for vocational vehicles as we are proposing for tractors (see Section II.F.2).

After considering the potential concerns with ZEVs fitting into the existing HD GHG Phase 2 vocational vehicle regulatory subcategories structure, we are proposing to maintain the existing HD GHG Phase 2 vocational vehicle regulatory subcategories with the proposed changes noted in this section. We request comment on possible alternative vocational vehicle regulatory subcategory structures, such as reducing the number of vocational vehicle subcategories to only include the Multi-Purpose standards in each weight class, and/or maintaining Urban, Multipurpose, and Regional but combining SI and CI into a standard for each weight class.

The HD GHG Phase 2 program includes optional custom chassis emission standards for eight specific vehicle types. Those vehicle types may either meet the primary vocational vehicle program standards or, at the vehicle manufacturer's option, they may comply with these optional standards. The existing optional custom chassis standards are numerically less stringent than the primary HD GHG Phase 2 vocational vehicle standards, but the ABT program is more restrictive for vehicles certified to these optional standards. Banking and trading of credits is not permitted, with the exception that small businesses that may use traded credits to comply. Averaging is only allowed within each subcategory for vehicles certified to these optional standards. If a manufacturer wishes to generate tradeable credits from the production of these vehicles, they may certify them to the primary vocational vehicle standards.

In this action, we are proposing to establish more stringent standards for several, but not all, of these optional custom chassis subcategories. We are proposing revised MY 2027 emission standards and new MY 2028 through MY 2032 and later emission standards for the school bus, other bus, coach bus, refuse hauler, and concrete mixer optional custom chassis regulatory subcategories. We are not proposing any changes to the existing ABT program restrictions for the optional custom chassis regulatory subcategories. Because vehicles certified to the optional custom chassis standards would continue to have restricted credit use and can only be used for averaging within a specific custom chassis regulatory subcategory, we do not have the same potential credit concern as we do for the primary vocational vehicle standards. Therefore, we determined the proposed optional custom chassis emission standards by multiplying the fraction of ICE-powered vehicles in the technology package (by model year) by the applicable existing MY 2027 CO_2 emission standards, like we did for determining the proposed tractor emission standards.

We are not proposing new standards for motor homes certified to the optional custom chassis regulatory subcategory because of the projected impact of the weight of batteries in BEVs in the MYs 2027–2032, as described in DRIA Chapter 2.8.1. Furthermore, we also are not proposing new standards for emergency vehicles certified to the optional custom chassis regulatory subcategory due to our assessment that these vehicles have unpredictable operational requirements and may have limited access to recharging facilities while handling emergency situations in the MYs 2027–2032 timeframe. Finally, we are not proposing new standards for mixed-use vehicle optional custom chassis regulatory subcategory because these vehicles are designed to work inherently in an off-road environment (such as hazardous material equipment or off-road drill equipment) or be designed to operate at low speeds such that it is unsuitable for normal highway operation and therefore may have limited access to on-site depot or public charging facilities in the MYs 2027–2032 timeframe.[520] We do not have concerns that manufacturers could inappropriately circumvent the proposed vocational vehicle standards or proposed optional custom chassis standards because vocational vehicles are built to serve a purpose. For example, a manufacturer cannot certify a box truck to the emergency vehicle custom chassis standards. We request comment on specific considerations and impacts the proposed standards would have on vehicles certified to these optional custom chassis standards. We also request comment and data regarding the potential for more stringent GHG standards for the motor homes, emergency vehicles, or mixed-use vehicles optional custom chassis regulatory subcategories in this time frame.

[520] Mixed-use vehicles must meet the criteria as described in 40 CFR 1037.105(h)(1), 1037.631(a)(1), and 1037.631(a)(2).

4. Summary of Costs To Meet the Proposed Emission Standards

We based the proposed standards on technology packages that include both ICE vehicle and ZEV technologies. In our analysis, the ICE vehicles include a suite of technologies that represent a vehicle that meets the existing MY 2027 Phase 2 CO_2 emission standards. We accounted for these technology costs as part of the HD GHG Phase 2 final rule. Therefore, our technology costs for the ICE vehicles are considered to be $0 because we did not add additional CO_2-reducing technologies to the ICE vehicles beyond those in the baseline vehicle. The incremental cost of a heavy-duty ZEV is the marginal cost of ZEV powertrain components compared to ICE powertrain components on a comparable ICE vehicle. This includes the removal of the associated costs of ICE-specific components from the baseline vehicle and the addition of the ZEV components and associated costs. DRIA Chapter 2.3.2 and 2.4.3 includes the ICE powertrain and BEV powertrain cost estimates for each of the 101 HD vehicle types. DRIA Chapter 2.5.2 includes the FCEV powertrain cost projections for the coach buses, heavy-haul tractors, sleeper cab tractors, and day cab tractors.

i. Manufacturer Costs

Table II–30 and Table II–31 show the ZEV technology costs for manufacturers relative to the reference case described in Section V.A.1, including the direct manufacturing costs that reflect learning effects, the indirect costs, and the IRA section 13502 Advanced Manufacturing Production Credit, on average aggregated by regulatory group for MYs 2027 and 2032, respectively.[521] The incremental ZEV adoption rate reflects the difference between the ZEV adoption rates in the technology packages that support our proposed standards and the reference case. As shown in Table II–30 and Table II–31, we project that some vocational vehicle types will achieve technology cost parity between comparable ICE vehicles and ZEVs for manufacturers by MY 2032. These vehicles in our analysis include school buses and single unit trucks (which include vehicles such as delivery trucks). Our analysis is consistent with other studies. For example, an EDF/Roush study found that by MY 2027, BEV transit buses, school buses, delivery vans, and refuse haulers would each cost less upfront

[521] Indirect costs are described in detail in Section IV.B.2.

than a comparable ICE vehicle.[522] ICCT similarly found that ''although zero-emission trucks are more expensive in the near-term than their diesel equivalents, electric trucks will be less expensive than diesel in the 2025–2030 time frame, due to declining costs of batteries and electric motors as well as increasing diesel truck costs due to emission standards compliance.''[523] These studies were developed prior to passage of the IRA, and therefore we would expect the cost comparisons to be even more favorable after considering the IRA provisions. For example, the Rocky Mountain Institute found that because of the IRA, the TCO of electric trucks will be lower than the TCO of comparable diesel trucks about five years faster than without the IRA. They expect cost parity as soon as 2023 for urban and regional duty cycles that travel up to 250 miles and 2027 for long-hauls that travel over 250 miles.[524]

TABLE II–30—MANUFACTURER COSTS TO MEET THE PROPOSED MY 2027 STANDARDS RELATIVE TO THE REFERENCE CASE

[2021$]

Regulatory group	Incremental ZEV adoption rate in technology package (%)	Per-ZEV manufacturer RPE on average	Fleet-average per-vehicle manufacturer RPE
LHD Vocational	18	$1,750	$323
MHD Vocational	15	15,816	2,411
HHD Vocational	12	−505	−62
Day Cab Tractors	8	64,121	5,187
Sleeper Cab Tractors	0	N/A	0

TABLE II–31—MANUFACTURER COSTS TO MEET THE PROPOSED MY 2032 STANDARDS RELATIVE TO THE REFERENCE CASE

[2021$]

Regulatory group	Incremental ZEV adoption rate in technology package (%)	Per-ZEV manufacturer RPE on average	Fleet-average per-vehicle manufacturer RPE
LHD Vocational	45	−$9,515	−$4,326
MHD Vocational	24	1,358	326
HHD Vocational	28	8,146	2,300
Day Cab Tractors	30	26,364	8,013
Sleeper Cab Tractors	21	54,712	11,445

i. Purchaser Costs

We also evaluated the costs of the proposed standards for purchasers on average by regulatory group, as shown in Table II–32 and Table II–33. Our assessment of the upfront purchaser costs include the incremental cost of a ZEV relative to a comparable ICE vehicle after accounting for the two IRA tax credits (IRA section 13502, ''Advanced Manufacturing Production Credit,'' and IRA section 13403, ''Qualified Commercial Clean Vehicles'') and the associated EVSE costs, if applicable. We also assessed the incremental annual operating savings of a ZEV relative to a comparable ICE vehicle. The payback periods shown reflect the number of years it would take for the annual operating savings to offset the increase in total upfront costs for the purchaser.

TABLE II–32—MY 2027 PURCHASER PER-ZEV UPFRONT COSTS, OPERATING COSTS, AND PAYBACK PERIOD

[2021$]

Regulatory group	Adoption rate in technology package (%)	Incremental per-ZEV RPE cost on average	EVSE costs Per-ZEV on average	Total incremental upfront per-ZEV costs on average	Annual incremental operating costs on average	Payback period (year) on average
LHD Vocational	22	−$1,733	$10,562	$8,828	−$4,474	3
MHD Vocational	19	482	14,229	14,711	−5,194	3

[522] Nair, Vishnu; Sawyer Stone; Gary Rogers; Sajit Pillai; Roush Industries, Inc. ''Technical Review: Medium and Heavy Duty Electrification Costs for MY 2027–2030.'' February 2022. Page 18. Last accessed on February 9, 2023 at *https://blogs.edf.org/climate411/files/2022/02/EDF-MDHD-Electrification-v1.6_20220209.pdf.*

[523] Hall, Dale and Nic Lutsey. ''Estimating the Infrastructure Needs and Costs for the Launch of Zero-Emission Trucks.'' February 2019. Page 4. Last accessed on February 9, 2023 at *https://theicct.org/wp-content/uploads/2021/06/ICCT_EV_HDVs_Infrastructure_20190809.pdf.*

[524] Kahn, Ari, et al. ''The Inflation Reduction Act Will Help Electrify Heavy-Duty Trucking''. Rocky Mountain Institute. August 25, 2022. Available online: *https://rmi.org/inflation-reduction-act-will-help-electrify-heavy-duty-trucking/.*

TABLE II–32—MY 2027 PURCHASER PER-ZEV UPFRONT COSTS, OPERATING COSTS, AND PAYBACK PERIOD—Continued

[2021$]

Regulatory group	Adoption rate in technology package (%)	Incremental per-ZEV RPE cost on average	EVSE costs Per-ZEV on average	Total incremental upfront per-ZEV costs on average	Annual incremental operating costs on average	Payback period (year) on average
HHD Vocational	16	−9,531	19,756	10,225	−4,783	3
Day Cab Tractors	10	24,121	37,682	61,803	−7,275	8
Sleeper Cab Tractors	0	N/A	N/A	N/A	N/A	N/A

Note: The average costs represent the average across the regulatory group, for example the first row represents the average across all Light Heavy-Duty vocational vehicles.

TABLE II–33—MY 2032 PURCHASER PER-ZEV UPFRONT COSTS, OPERATING COSTS, AND PAYBACK PERIOD

[2021$]

Regulatory group	Adoption rate in technology package (%)	Incremental per-ZEV RPE cost on average	EVSE costs Per-ZEV on average	Total incremental upfront per-ZEV costs on average	Annual incremental operating costs on average	Payback period (year) on average
LHD Vocational	57	−$9,608	$10,552	$944	−$4,043	1
MHD Vocational	35	−2,907	14,312	11,405	−5,397	3
HHD Vocational	40	−8,528	17,233	8,705	−7,436	2
Day Cab Tractors	34	582	16,753	17,335	−6,791	3
Sleeper Cab Tractors	25	14,712	0	14,712	−2,290	7

As shown in Table II–33, under our proposal we estimate that the average upfront cost per vehicle to purchase a new MY 2032 vocational ZEV and associated EVSE compared to a comparable ICE vehicle (after accounting for two IRA tax credits, IRA section 13502, ''Advanced Manufacturing Production Credit,'' and IRA section 13403, ''Qualified Commercial Clean Vehicles''), would be offset by operational costs (*i.e.,* savings that come from the lower costs to operate, maintain, and repair ZEV technologies), such that we expect the upfront cost increase would be recouped due to operating savings in one to three years, on average for vocational vehicles. For a new MY 2032 day cab tractor ZEV and associated EVSE, under our proposal we estimate the average incremental upfront cost per vehicle would be recovered in three years, on average. Similarly, for sleeper cab tractors, we estimate that the initial cost increase would be recouped in seven years. We discuss this in more detail in DRIA Chapter 2.

The average per-vehicle purchaser costs shown in Table II–32 for MY 2027 are higher than the MY 2032 per-vehicle costs. The reduction in costs over time are reflective of technology learning, as discussed in Section IV.B. It is worth noting that though the upfront costs of a BEV day cab tractor, for example, are higher when one considers both the vehicle and the EVSE, purchasers would still recoup these upfront costs within eight years of ownership on average. Also of note, our proposed standards in MY 2027 have a lower adoption rate of 10 percent for these day cab tractors, in recognition of the higher cost in MY 2027 than in MY 2032. The upfront vehicle cost increase projected at $24,000 represents a less than a 25 percent increase when compared to the average price of $100,000 for a new day cab tractor. Purchasers also would have the option to consider alternatives to purchasing an EVSE at the time of purchasing a vehicle. For example, depending on the location of the vehicle, heavy-duty public charging may be a better solution than depot charging. The purchaser could instead of spending over $37,000 upfront on average for EVSE, they could instead spread the cost over time through public charging where the EVSE costs would be built into the electricity cost.

5. Lead Time Assessment

Two of the significant aspects of the IRA are the tax credit available for the manufacturing of batteries and the tax credit available for the purchase of HD zero-emission vehicles, where the IRA provisions' qualifications are met. The tax credits significantly reduce, and in many cases erase, the incremental cost of purchasing a HD ZEV when compared to the cost of purchasing a comparable ICE vehicle. Therefore, as explained in our payback analysis, we expect the IRA will incentivize the demand and purchaser acceptance for HD ZEVs. However, demand and purchaser acceptance are only two of the factors we consider when evaluating the feasibility of HD ZEV technologies in the MY 2027 through MY 2032 timeframe. As we propose standards for MYs 2027 through 2032, which are between four and nine years from now, we considered the lead time required for manufacturers to design, develop, and produce the ZEV and ICE vehicle technologies in the technology packages, in addition to lead time considerations for the charging and hydrogen refueling infrastructure. We welcome comment on our assessment of lead time in these areas.

Manufacturers require time to design, develop, and build new vehicles. Based on discussions with heavy-duty manufacturers, depending on the amount of content that is new on a vehicle, it could take two to four years or more years to design, develop and prove the safety and reliability of a new HD vehicle. A typical design process includes the design and building of prototype or demonstration vehicles that are evaluated over several months or years in real world operation. The manufacturers need to accumulate miles and experience a wide variety of environmental conditions on these

prototype vehicles to demonstrate the product's durability and reliability. Then manufacturers would work to commercialize the vehicle and in turn build it in mass production. We also considered that manufacturers are likely limited in terms of the financial resources, human resources, and testing facilities to redesign all of their vehicles at the same time. Typically, manufacturers would focus on the applications with the best business case because these would be where the customers would be most willing to purchase, therefore the proposed standards phase in over a period of time starting in MY 2027 through MY 2032. For HD BEVs, we have considered that BEV technology has been demonstrated to be technically feasible in heavy-duty transportation and that manufacturers will learn from the research and development work that has gone into developing the significant number of LD and HD electric vehicle models that are on the road today, as noted in Section II.D.2 and DRIA Chapter 1.5.5, and our proposed standards are supported by technology packages with increasing BEV adoption rates beginning in MY 2027 (see also our discussion in this subsection regarding our consideration of adequate time for infrastructure development for HD BEVs). For HD FCEVS, as discussed in Section II.D.3 and II.D.4, along with DRIA Chapter 1.7.5, fuel cell technology in other sectors has been in existence for decades, has been demonstrated to be technically feasible in heavy-duty transportation, and there are a number of HD FCEV models that are commercially available today with more expected to become available by 2024. However, we included this technology for our proposed standards starting in MY 2030 in part to take into consideration additional lead time to allow manufacturers to design, develop, and manufacture HD FCEV models (see also our discussion in this subsection regarding our consideration of adequate time for infrastructure development for HD FCEVs).

We discuss in Sections II.D.1 and II.F.1 the need for ICE vehicles to continue to install CO_2-reducing technologies, such as advanced aerodynamics, efficient powertrains, and lower rolling resistance tires. In our technology assessment for this proposal, we included the technology packages we considered in setting the existing Phase 2 MY 2027 CO_2 emission standards. Each of these technologies exists today and continues to be developed by manufacturers. As noted in 2016 when we issued the HD GHG Phase 2 final rule, at that time we provided over ten years of lead time to the manufacturers to continue the development and deployment of these technologies. Our current assessment is that these ICE vehicle technologies continue to be feasible in the MY 2027 and later timeframe.

As a new vehicle is being designed and developed, we considered that manufacturers will also need time to significantly increase HD ZEV production volumes from today's volumes. In particular, manufacturers will need to build new or modify existing manufacturing production lines to assemble the new products that include ZEV powertrains. We also considered that manufacturers will require time to source new components, such as heavy-duty battery packs, motors, fuel cell stacks, and other ZEV components, including the sourcing of the critical materials, as discussed in Section II.D.2.ii. As described in Section II.D.5, we anticipate that manufacturers will not develop vehicles to cover all types of HD vehicles at once but will focus on those with the most favorable business case first, increase the adoption of those vehicles over time, and then develop other applications. We believe our approach described in Section II.D.5 shows the adoption rates for the applications we have considered would be achievable in the MY 2027 and later timeframe. We welcome comment on the manufacturer lead time requirements for HD ZEVs.

Purchasers of BEVs will also need to consider how they will charge their vehicles. Our assessment of the availability of public charging infrastructure, EVSE technology, and costs associated with depot charging are included in Section II.E.2 of this preamble, DRIA Chapter 1 and DRIA Chapter 2. As noted in DRIA Chapter 2, we anticipate that many first-time BEV owners may opt to purchase and install EVSE at or near the time of vehicle purchase and we therefore account for these capital costs upfront. In terms of EVSE for HD BEVs, this equipment is available today for purchase. However, it takes time for individual or fleet owners to develop charging site plans for their facility, obtain permits, purchase the EVSE, and have it installed. For the depots that may be charging a greater number of vehicles or with high-power DCFC ports, an upgrade to the electricity distribution system may be required. As noted in DRIA Chapter 1, we expect significant increases in HD charging infrastructure due to a combination of public and private investments. This includes Federal funding available through the BIL [525] and the IRA.[526] As discussed in DRIA Chapter 1.6.2.2, states, OEMs, utilities, EVSE providers and others are also investing in and supporting the deployment of charging infrastructure. For example, Daimler Trucks North America, Volvo Trucks, Navistar, and PACCAR are a few of the HD manufacturers investing in EVSE, sometimes packaging the sale of EVSE with the vehicle.[527] [528] [529] [530] Because of these projected increases and the funding available through the BIL and IRA, and as we are proposing more stringent standards that begin in MY 2027, our assessment supports that there is sufficient time for the infrastructure, especially for depot charging, to gradually increase over the remainder of this decade to levels that support the stringency of the proposed standards for the timeframe they would apply. We request comment on time considerations for all levels of HD charging infrastructure, including Level 2 up to 350 kW DCFC systems.

Purchasers of FCEVs will need to consider how they will obtain hydrogen to refuel the vehicles. As discussed in DRIA Chapter 1.8, there are currently 54 public retail hydrogen fueling stations in the United States, primarily for light-duty vehicles in California according to DOE's Alternative Fuels Data Center. When including private and planned stations in a search, there are over 130 refueling station locations nationwide.[531] There are also numerous nationally designated hydrogen-ready or hydrogen-pending Alternative Fueling Corridors. Corridor-ready designations

[525] Infrastructure Investment and Jobs Act, Public Law 117–58, 135 Stat. 429 (2021), available at *https://www.congress.gov/117/plaws/publ58/PLAW-117publ58.pdf*.

[526] Inflation Reduction Act, Public Law 117–169, 136 Stat. 1818 (2022).

[527] Daimler Truck North America. ''Daimler Trucks North America, Portland General Electric open first-of-its-kind heavy-duty electric truck charging site''. April 21, 2021. Available online: *https://northamerica.daimlertruck.com/PressDetail/daimler-trucks-north-america-portland-general-2021-04-21*.

[528] Volvo Trucks USA. ''Volvo Trucks Simplifies EV Charger Procurement with Vendor Direct Shipping Program''. September 29, 2022. Available online: *https://www.volvotrucks.us/news-and-stories/press-releases/2022/september/volvo-trucks-simplifies-ev-charger-procurement-with-vendor-direct-shipping-program*.

[529] Navistar. ''Navistar and In-Charge Energy Now Offer Carbon-Neurtral Electric Vehicle Charging''. Available online: *https://news.navistar.com/2021-10-25-Navistar-and-In-Charge-Energy-Now-Offer-Carbon-Neutral-Electric-Vehicle-Charging*.

[530] Paccar Parts. ''Electric Vehicle Chargers''. Available online: *https://www.paccarparts.com/technology/ev-chargers/*.

[531] U.S. Department of Energy, Alternative Fuels Data Center. ''Hydrogen Fueling Station Locations''. Last accessed on January 27, 2023. Available online: *https://afdc.energy.gov/fuels/hydrogen_locations.html#/analyze?fuel=HY*.

have public hydrogen stations no greater than 100 miles apart and no greater than five miles off the highway. Corridor-pending designations have public hydrogen stations separated by more than 100 miles but no greater than five miles off the highway.[532] [533] In addition, DOE's draft Clean Hydrogen Strategy and Roadmap suggests a regional ''clean hydrogen hub'' approach to infrastructure. Under provisions of the BIL, DOE is investing $8 billion through 2026 to support the development of at least four hubs that can demonstrate the production, processing, delivery, storage, and end use of clean hydrogen.

DOE released a Liftoff Report on clean hydrogen to establish a common fact base moving forward for dialogue and coordinated action across the full technology value chain (*e.g.,* from upstream production to downstream end uses). The report considers the impact of hub funding and tax credits under BIL and IRA, including the hydrogen production tax credit (PTC). It identifies three phases of rapid market growth: near-term expansion (~2023–2026), industrial scaling (~2027–2034), and long-term growth (~2035+). The report acknowledges that there are both opportunities and challenges for sectors with few decarbonization alternatives like heavy-duty transportation end uses, including long-haul trucks. During the timeframe of this rule (*i.e.,* through 2032), the Liftoff Report supports a scenario where low-GHG hydrogen will be emerging for long-haul trucks.[534] We project that hydrogen consumption from FCEVs in this proposal would be a small proportion of total low-GHG hydrogen expected to be produced through 2030 in the United States.

To meet more immediate needs, end users may expect to rely on hydrogen deliveries from central production facilities. After evaluating the existing and future hydrogen refueling infrastructure,[535] we considered FCEVs only in the MY 2030 and later timeframe to better ensure we have provided adequate time for infrastructure development and because we expect that refueling needs can be met by MY 2030, as discussed in Section II.D.4 and in DRIA Chapter 2.1. We request comment on lead time considerations related to the development of HD hydrogen fueling infrastructure.

Giving consideration to these factors, our analysis supports that there is sufficient lead time to meet the proposed standards, which manufacturers may comply with through application of BEV technologies, FCEV technologies, or further improvements to ICE vehicles, including H2–ICE powered vehicles. However, we also considered and are requesting comment on an alternative standards reflecting a slower phase-in of HD ZEV adoption rates, and are also seeking comment on more stringent standards reflecting a more aggressive phase-in of HD ZEV adoption rates, as described in Section II.H.

Additionally, while we believe there is sufficient time for the charging and refueling infrastructure to develop for the reasons explained in this section, EPA recognizes that such infrastructure for BEVs and FCEVs is important for the success of the increasing development and adoption of these vehicle technologies. EPA carefully considered that there are significant efforts already underway to develop and expand heavy-duty electric charging and hydrogen refueling infrastructure both at the local, State and Federal government level as well as from private industry, as discussed in DRIA Chapters 1 and 2 and this section. Those are important early actions that, as we just explained, will support the increase in ZEV charging and refueling infrastructure needed for the future growth of ZEV technology of the magnitude EPA is projecting in this proposal's technology packages. EPA has heard from some representatives from the heavy-duty vehicle manufacturing industry both optimism regarding the heavy-duty industry's ability to produce ZEV technologies in future years at high volume, but also concern that a slow growth in ZEV refueling infrastructure can slow the growth of heavy-duty ZEV adoption, and that this may present challenges for vehicle manufacturers' ability to comply with future EPA GHG standards. EPA has a vested interest in monitoring industry's performance in complying with mobile source emission standards, including the highway heavy-duty industry. EPA monitors industry's performance through a range of approaches, including regular meetings with individual companies and regulatory requirements for data submission as part of the annual certification process. EPA also provides transparency to the public through actions such as publishing industry compliance reports (such as has been done during the heavy-duty GHG Phase 1 program).[536] EPA requests comment on what, if any, additional information and data EPA should consider collecting and monitoring during the implementation of the Phase 3 standards; we also request comment on whether there are additional stakeholders EPA should work with during implementation of the Phase 3 standards and what measures EPA should include to help ensure success of the Phase 3 program, including with respect to the important issues of refueling and charging infrastructure for ZEVs.

G. EPA's Basis That the Proposed Standards Are Feasible and Appropriate Under the Clean Air Act

1. Overview

As discussed in Section II.A of this preamble, there is a critical need for further GHG reductions to address the adverse impacts of air pollution from HD vehicles on public health and welfare. With continued advances in internal combustion emissions controls and vehicle zero emission technologies coming into the mainstream as key vehicle emissions controls, EPA believes substantial further emissions reductions are feasible and appropriate under the Clean Air Act.

The Clean Air Act authorizes EPA to establish emissions standards for motor vehicles to regulate emissions of air pollutants that contribute to air pollution which, in the Administrator's judgment, may reasonably be anticipated to endanger public health or welfare. Heavy-duty vehicles are significant contributors to the U.S. GHG emissions inventories, and additional reductions in GHGs from vehicles are needed to avoid the worst consequences of climate change as discussed in Section II.A.

[532] U.S. Department of Transportation, Federal Highway Administration. ''Alternative Fuel Corridors: Hydrogen''. Available online: *https://hepgis.fhwa.dot.gov/fhwagis/ViewMap.aspx?map=Highway+Information|Hydrogen+(HY-Round+1,2,3,4,5+and+6)#.*

[533] U.S. Department of Transportation, Federal Highway Administration. ''Alternative Fuel Corridors; Frequently Asked Questions FAST Act Section 1413—Alternative Fuel Corridor Designations Updated December 2020 to Support Round 5''. Available online: *https://www.fhwa.dot.gov/environment/alternative_fuel_corridors/resources/faq/.*

[534] U.S. Department of Energy. ''Pathways to Commercial Liftoff: Clean Hydrogen''. March 2023. Available online: *https://liftoff.energy.gov/wp-content/uploads/2023/03/20230320-Liftoff-Clean-H2-vPUB.pdf.*

[535] U.S. Department of Energy. ''Pathways to Commercial Liftoff: Clean Hydrogen''. March 2023. Available online: *https://liftoff.energy.gov/wp-content/uploads/2023/03/20230320-Liftoff-Clean-H2-vPUB.pdf.*

[536] See EPA Reports EPA–420–R–21–001B covering Model Years 2014–2018, and EPA report EPA–420–R–22–028B covering Model Years 2014–2020, available online at *https://www.epa.gov/compliance-and-fuel-economy-data/epa-heavy-duty-vehicle-and-engine-greenhouse-gas-emissions.*

This proposed rule also considers the large potential impact that the Inflation Reduction Act (IRA) will have on facilitating production and adoption of ZEV technologies. The IRA provides powerful incentives in reducing the cost to manufacture and purchase ZEVs, as well as reducing the cost of charging infrastructure, that will help facilitate increased market penetration of ZEV technology in the time frame considered in this rulemaking. Thus, it is an important element of EPA's cost and feasibility assessment, and EPA has considered the impacts of the IRA in our assessment of the appropriate proposed standards.

As we did in HD GHG Phase 1 and Phase 2 rulemakings, in this Phase 3 proposal we considered the following factors: the impacts of potential standards on emissions reductions of GHG emissions; technical feasibility and technology effectiveness; the lead time necessary to implement the technologies; costs to manufacturers; costs to purchasers including operating savings; reduction of non-GHG emissions; the impacts of standards on oil conservation and energy security; impacts of standards on the truck industry; other energy impacts; as well as other relevant factors such as impacts on safety.[537] See Section II.G.5 for further discussion of how we balanced the factors we considered for the proposed Phase 3 standards.

2. Consideration of Technological Feasibility, Compliance Costs and Lead Time

The technological readiness of the heavy-duty industry to meet the proposed standards for model years 2027–2032 and beyond is best understood in the context of over a decade of heavy-duty vehicle emissions reduction programs in which the HD industry has introduced emissions reducing technologies in a wide lineup of ever more efficient and cost-competitive vehicle applications. Electrification technologies have seen particularly rapid development over the last several years such that early HD ZEV models are in use today for some applications and and are expected to expand to many more applications, as discussed DRIA Chapters 1.5 and 2, and as a result the number of ZEVs projected in the proposal and across all the alternatives considered here is much higher than in any of EPA's prior rulemaking analyses.

As discussed in DRIA Chapter 1.5.5 and Section I, the ZEV technology necessary to achieve significantly more stringent standards has already been developed and deployed. Additionally, manufacturers have announced plans to rapidly increase their investments in ZEV technologies over the next decade. In addition, the IRA and the BIL provide many monetary incentives for the production and purchase of ZEVs in the heavy-duty market, as well as incentives for electric vehicle charging infrastructure. Furthermore, there have been multiple actions by states to accelerate the adoption of heavy-duty ZEVs, such as (1) a multi-state Memorandum of Understanding for the support of heavy-duty ZEV adoption;[538] and (2) the State of California's ACT program, which has also been adopted by other states and includes a manufacturer requirement for zero-emission truck sales.[539] Together with the range of ICE technologies that have been already demonstrated over the past decade, BEVs and FCEVs with no tailpipe emissions (and 0 g CO_2/ton-mile certification values) are capable of supporting rates of annual stringency increases that are much greater than were typical in earlier GHG rulemakings.

In setting standards for a future model year, EPA considers the extent deployment of advanced technologies would be available and warranted in light of the benefits to public health and welfare in GHG emission reductions, and potential constraints, such as cost of compliance, lead time, raw material availability, component supplies, redesign cycles, charging and refueling infrastructure, and purchasers' willingness to purchase (including payback). The extent of these potential constraints has diminished significantly in light of increased and further projected investment by manufacturers, increased and further projected acceptance by purchasers, and significant support from Congress to address such areas as upfront purchase price, charging infrastructure, critical mineral supplies, and domestic supply chain manufacturing. In response to the increased stringency of the proposed standards, manufacturers would be expected to adopt advanced technologies, such as increased electrification, at an increasing pace across more of their vehicles. To evaluate the feasibility of BEVs and FCEVs in our technology packages that support the proposed standards, EPA developed a tool called HD TRUCS, to evaluate the design features needed to meet the energy and power demands of various HD vehicle types when using ZEV technologies. The overarching design and functionality of HD TRUCS is premised on ensuring each of the 101 ZEV types could perform the same work as a comparable ICE vehicle counterpart. Within the HD TRUCS modeling that EPA conducted to support this proposal, we have imposed constraints to reflect the rate at which a manufacturer can deploy ZEV technologies that include consideration of time necessary to ramp up battery production, including the need to increase the availability of critical raw materials and expand battery production facilities, as discussed in Section II.D.2.ii.

Constraints on the technology adoption limits in our compliance modeling as well as other aspects of our lead time assessment are described in Section II.F. Overall, given the number and breadth of current low or zero emission vehicles and the constraints we have made to limit the rate of development for new HD vehicles, our assessment shows that there is sufficient lead time for the industry to more broadly deploy existing technologies and successfully comply with the proposed standards.

Our analysis projects that for the industry overall, nearly 50 percent of new vocational vehicles and 25 to 35 percent of new tractors in MY 2032 would be ZEVs. EPA believes that this is an achievable level based on our technical assessment for this proposal that includes consideration of the feasibility and lead time required for ZEVs and appropriate consideration of the cost of compliance for manufacturers. Our assessment of the appropriateness of the level of ZEVs in our analysis is also informed by public announcements by manufacturers about their plans to transition fleets to electrified vehicles, as described in Section I.A.2 of this preamble. More detail about our technical assessment, and our assessment of the production feasibility of ZEVs is provided in Section II.D and II.E of this Preamble and Chapters 1 and 2 of the DRIA. At the same time, we note that the proposed standards are performance-based and do not mandate any specific technology for any manufacturer or any vehicles. Moreover, the overall industry does not necessarily need to reach this level of ZEVs in order to comply—this

[537] 81 FR 73512 (October 25, 2016) and 76 FR 57129 (September 15, 2011).

[538] NESCAUM MOU, available at *https://www.nescaum.org/documents/mhdv-zev-mou-20220329.pdf*.

[539] EPA granted the ACT rule waiver requested by California under CAA section 209(b) on March 30, 2023. The ACT had been adopted by five states under CAA section 177: Oregon, Washington, New York, New Jersey, and Massachusetts. Oregon and Washington adopted ACT as-is, whereas New York, New Jersey, and Massachusetts adopted ACT on a one-year delay.

is one of many possible compliance pathways that manufacturers could choose to take under the performance-based standards. For example, manufacturers that choose to increase their sales of hybrid vehicle technologies or apply more advanced technology to non-hybrid ICE vehicles would require a smaller number of ZEVs than we have projected in our assessment to comply with the proposed standards.

In considering feasibility of the proposed standards, EPA also considers the impact of available compliance flexibilities on manufacturers' compliance options. Manufacturers widely utilize the program's established averaging, banking and trading (ABT) provisions which provide a variety of flexible paths to plan compliance. We have discussed this dynamic in past rules, and we anticipate that this same dynamic will support compliance with this rulemaking. The GHG credit program was designed to recognize that manufacturers typically have a multi-year redesign cycle and not every vehicle will be redesigned every year to add emissions-reducing technology. Moreover, when technology is added, it will generally not achieve emissions reductions corresponding exactly to a single year-over-year change in stringency of the standards. Instead, in any given model year, some vehicles will be ''credit generators,'' over-performing compared to their respective CO_2 emission standards in that model year, while other vehicles will be ''debit generators'' and under-performing against their standards. As the proposed standards reach increasingly lower numerical levels, some vehicle designs that had generated credits against their CO_2 emission standard in earlier model years may instead generate debits in later model years. In MY 2032 when the proposed standards reach the lowest level, it is possible that only BEVs, FCEVs, and H2–ICE vehicles are generating positive credits, and all ICE vehicles generate varying levels of deficits. Even in this case, the application of ICE technologies can remain an important part of a manufacturer's compliance strategy by reducing the amount of debits generated by these vehicles. A greater application of ICE technologies (*e.g.,* hybrids) can enable compliance with fewer ZEVs than if less ICE technology was adopted, and therefore enable the tailoring of a compliance strategy to the manufacturer's specific market and product offerings. Together, a manufacturer's mix of credit-generating and debit-generating vehicles contribute to its sales-weighted average performance, compared to its standard, for that year.

Just as the averaging approach in the HD vehicle GHG program allows manufacturers to design a compliance strategy relying on the sale of both credit-generating vehicles and debit-generating vehicles in a single year, the credit banking and trading provisions of the program allow manufacturers to design a compliance strategy relying on overcompliance and undercompliance in different years, or even by different manufacturers. Credit banking allows credits to carry-over for up to five years and allows manufacturers up to three years to address any credit deficits. Credit trading is a compliance flexibility provision that allows one vehicle manufacturer to purchase credits from another, though trading of GHG credits has not occurred with HD GHG credits.

The proposed performance-based standards with ABT provisions give manufacturers a degree of flexibility in the design of specific vehicles and their fleet offerings, while allowing industry overall to meet the standards and thus achieve the health and environmental benefits projected for this rulemaking. EPA has considered the averaging portion of the ABT program in the feasibility assessments for previous rulemakings and continues that practice here. We also continue to acknowledge that the other provisions in ABT that provide manufacturers additional flexibility also support the feasibility of the proposed standards. By averaging across vehicles in the vehicle averaging sets and by allowing for credit banking across years, manufacturers have the flexibility to adopt emissions-reducing technologies in the manner that best suits their particular market and business circumstances. EPA's annual Heavy-Duty Vehicle and Engine Greenhouse Gas Emissions Compliance Report illustrates how different manufacturers have chosen to make use of the GHG program's various credit features.[540] It is clear that manufacturers are widely utilizing several of the credit programs available, and we expect that manufacturers will continue to take advantage of the compliance flexibilities and crediting programs to their fullest extent, thereby providing them with additional tools in finding the lowest cost compliance solutions in light of the proposed standards.

In addition to technological feasibility and lead time, EPA has considered the cost for the heavy-duty industry to comply with the proposed standards. See Section II.F.4 and Chapter 2 of the DRIA for our analysis of compliance costs for manufacturers. We estimate that the MY 2032 fleet average per-vehicle cost to manufacturers by regulatory group would range between a cost savings for LHD vocational vehicles to $2,300 for HHD vocational vehicles and between $8,000 and $11,400 per tractor. EPA notes the projected costs per vehicle for this proposal are similar to the fleet average per-vehicle costs projected for the HD GHG Phase 2 rule that we considered to be reasonable. The Phase 2 tractor standards were projected to cost between $10,200 and $13,700 per vehicle (81 FR 73621). The Phase 2 vocational vehicle standards were projected to cost between $1,486 and $5,670 per vehicle (81 FR 73718). Furthermore, the estimated MY 2032 costs to manufacturers represent less than about ten percent of the average price of a new heavy-duty tractor today (conservatively estimated at $100,000 in 2022).[541] For this proposal, EPA finds that the expected vehicle compliance costs are reasonable in light of the emissions reductions in air pollutants and the resulting benefits for public health and welfare.

3. Consideration of Emissions of GHGs

An essential factor that EPA considered in determining the appropriate level of the proposed standards is the reductions in GHG emissions and associated public health and welfare impacts.[542]

The proposed GHG standards would achieve significant reductions in GHG emissions. The proposed standards would achieve approximately 1.8 billion metric tons in net CO_2 cumulative emission reductions from calendar years 2027 through 2055 (see Section V of the preamble and Chapter 4 of the DRIA). As discussed in Section VI of this

[540] ''The Final Phase 1 EPA Heavy-Duty Vehicle and Engine Greenhouse Gas Emissions Compliance Report (Model Years 2014–20),'' EPA–420–R–22–028. November 2022. Last accessed on February 9, 2023 at *https://www.epa.gov/compliance-and-fuel-economy-data/epa-heavy-duty-vehicle-and-engine-greenhouse-gas-emissions.*

[541] Note that these values are averages across all vehicles and there will be differences for each individual vehicle.

[542] As further explained in Section II.G.4, we note that we also expect the proposed GHG emission standards would lead to an increase in HD ZEVs, which would also result in reductions of vehicle emissions of non-GHG pollutants that contribute to ambient concentrations of ozone, particulate matter ($PM_{2.5}$), NO_2, CO, and air toxics. EPA did not select the proposed GHG emission standards based on non-GHG reductions of vehicle emissions; nonetheless, the GHG and non-GHG reductions of vehicle emissions of the proposed program reinforce our view that the proposed standards represent an appropriate weighing of the statutory factors and other relevant considerations.

preamble, these GHG emission reductions would make an important contribution to efforts to limit climate change and its anticipated impacts.

The proposed CO_2 emission standards would reduce adverse impacts associated with climate change and would yield significant benefits, including those we can monetize and those we are unable to fully monetize due to data and modeling limitations. The program would result in significant social benefits including $87 billion in climate benefits (with the average SC–GHGs at a 3 percent discount rate). A more detailed description and breakdown of these benefits can be found in Section VII of the preamble and Chapter 7 of the DRIA.

As discussed in Section VII, we monetize benefits of the proposed CO_2 standards and evaluate other costs in part to better enable a comparison of costs and benefits pursuant to E.O. 12866, but we recognize that there are benefits we are unable to fully quantify. EPA's consistent practice has been to set standards to achieve improved air quality consistent with CAA section 202, and not to rely on cost-benefit calculations, with their uncertainties and limitations, in identifying the appropriate standards. Nonetheless, our conclusion that the estimated benefits considerably exceed the estimated costs of the proposed program reinforces our view that the proposed standards represent an appropriate weighing of the statutory factors and other relevant considerations.

4. Consideration of Impacts on Purchasers, Non-GHG Emissions, Energy, Safety and Other Factors

Another factor that EPA considered in determining the proposed standards is the impact of the proposed HD CO_2 standards on purchasers, consistent with the approach we used in HD GHG Phase 1 and Phase 2. In this proposal, we considered willingness to purchase (such as practicability, payback, and costs for vehicle purchasers including EVSE) in determining the appropriate level of the proposed standards. Businesses that operate HD vehicles are under competitive pressure to reduce operating costs, which should encourage purchasers to identify and rapidly adopt vehicle technologies that provide a positive total cost of ownership. Outlays for labor and fuel generally constitute the two largest shares of HD vehicle operating costs, depending on the price of fuel, distance traveled, type of HD vehicle, and commodity transported (if any), so businesses that operate HDVs face strong incentives to reduce these costs.[543] [544] However, as noted in DRIA Chapter 6.2, there are a number of other considerations that may impact a purchaser's willingness to adopt new technologies. Within HD TRUCS, we considered the impact on purchasers through our evaluation of payback periods. The payback period is the number of years that it would take for the annual operational savings of a ZEV to offset the incremental upfront purchase price of a BEV or FCEV (after accounting for the IRA section 13502 battery tax credit and IRA section 13403 vehicle tax credit) and charging infrastructure costs (for BEVs) when compared to purchasing a comparable ICE vehicle. The average per-vehicle costs to a purchaser by regulatory group for a MY 2032 heavy-duty vehicle, including associated EVSE and after considering the IRA battery-manufacturer and vehicle-purchaser tax credits, are projected to range between $900 and $11,000 for vocational vehicles and $14,700 and $17,300 for tractors. As noted in Section II.F.4.ii, EPA concludes that the proposed standards would be beneficial for purchasers because the lower operating costs during the operational life of the vehicle would offset the increase in vehicle technology costs. For example, purchasers of MY 2032 vocational vehicles and day cab tractors on average by regulatory group would recoup the upfront costs through operating savings within the first three years of ownership. Furthermore, the purchasers would benefit from annual operating cost savings for each year after the payback occurs. EPA finds that these average costs to purchasers are reasonable considering the operating savings which more than offsets these costs, as was also the case with the HD GHG Phase 2 rule. See 81 FR 73482.

We also considered the practicability and suitability of the proposed standards as we applied an additional constraint within HD TRUCS that limited the maximum ZEV adoption rate to 80 percent for any given vehicle type. This conservative limit was developed after consideration of the actual needs of the purchasers, as discussed in Section II.F.1.

Within our analysis, to support the practicability and suitability of the proposed standards we also considered the lead time necessary for purchasers to install depot charging and the lead time necessary for development of hydrogen infrastructure that would be required for the use of these technologies. As further explained in DRIA Chapter 1.6 and Sections II.E.2 and II.F.5, our assessment supports that depot charging can be installed in time for the purchase and use of the volume of MY 2027 BEVs we project could be used to comply with the proposed standards. With respect to hydrogen infrastructure, as further explained in DRIA Chapter 1.8 and Section II.F.5, we recognize that this may take longer to develop, and therefore included a constraint for FCEVs such that we did not propose new standards for long-haul vehicles until MY 2030, when we expect refueling needs can be met for the volume of FCEVs we project could be used to comply with the proposed standards. Furthermore, we also assessed the impact of future HD BEVs on the grid, as discussed in Section II.E.2. Our assessment is that grid reliability is not expected to be adversely affected by the modest increase in electricity demand associated with HD BEV charging and thus was not considered to be a constraining consideration.

EPA considers our analysis of the impact of the proposed CO_2 emission standards on vehicle and upstream emissions for non-GHG pollutants as supportive of the proposed standards. The proposed standards would decrease vehicle emissions of non-GHG pollutants that contribute to ambient concentrations of ozone, particulate matter ($PM_{2.5}$), NO_2, CO, and air toxics. By 2055, when considering downstream vehicle, EGU, and refinery emissions, we estimate a net decrease in emissions from all pollutants modeled (*i.e.,* NO_X, $PM_{2.5}$, VOC, and SO_2) (see Section V of the preamble and Chapter 4 of the DRIA for more detail).

As also explained in Section II.G.3, and as discussed in Section VII, we monetize benefits of the proposed standards and evaluate other costs in part to better enable a comparison of costs and benefits pursuant to E.O. 12866, but we recognize that there are benefits we are unable to fully quantify. EPA's consistent practice has been to set standards to achieve improved air quality consistent with CAA section 202, and not to rely on cost-benefit calculations, with their uncertainties and limitations, in identifying the appropriate standards.

EPA also evaluated the impacts of the proposed HD GHG standards on energy, in terms of oil conservation and energy security through reductions in fuel consumption. This proposal is projected to reduce U.S. oil imports 4.3 billion gallons through 2055 (see Section VI.F).

[543] American Transportation Research Institute, *An Analysis of the Operational Costs of Trucking,* September 2013. Docket ID: EPA–HQ–OAR–2014–0827–0512.

[544] Transport Canada, Operating Cost of Trucks, 2005. Docket ID: EPA–HQ–OAR–2014–0827–0070.

We estimate the benefits due to reductions in energy security externalities caused by U.S. petroleum consumption and imports would be approximately $12 billion under the proposed program. EPA considers this proposal to be beneficial from an energy security perspective and thus this factor was considered to be a supportive and not constraining consideration.

EPA estimates that the present value of monetized net benefits to society would be approximately $320 billion through the year 2055 (annualized net benefits of $17 billion through 2055), more than 5 times the cost in vehicle technology and associated electric vehicle supply equipment (EVSE) combined. Regarding social costs, EPA estimates that the cost of vehicle technology (not including the vehicle or battery tax credits) and EVSE would be approximately $9 billion and $47 billion respectively, and that the HD industry would save approximately $250 billion in operating costs (*e.g.,* savings that come from less liquid fuel used, lower maintenance and repair costs for ZEV technologies as compared to ICE technologies, etc.). The program would result in significant social benefits including $87 billion in climate benefits (with the average SC–GHGs at a 3 percent discount rate). Between $15 and $29 billion of the estimated total benefits through 2055 are attributable to reduced emissions of non-GHG pollutants, primarily those that contribute to ambient concentrations of $PM_{2.5}$. Finally, the benefits due to reductions in energy security externalities caused by U.S. petroleum consumption and imports would be approximately $12 billion under the proposed program. A more detailed description and breakdown of these benefits can be found in Section VIII of the preamble and Chapter 7 of the DRIA. Our conclusion that the estimated benefits considerably exceed the estimated costs of the proposed program reinforces our view that the proposed standards represent an appropriate weighing of the statutory factors and other relevant considerations.

Section 202(a)(4)(A) of the CAA specifically prohibits the use of an emission control device, system or element of design that will cause or contribute to an unreasonable risk to public health, welfare, or safety. EPA has a history of considering the safety implications of its emission standards, including the HD Phase 1 and Phase 2 rule. We highlight the numerous industry standards and safety protocols that exist today for heavy-duty BEVs and FCEVs that provide guidance on the safe design of these vehicles in Section II.D and DRIA Chapter 1 and thus this factor was considered to be a supportive and not constraining consideration.

5. Selection of Proposed Standards Under CAA 202(a)

Under section 202(a), EPA has a statutory obligation to set standards to reduce emissions of air pollutants from classes of motor vehicles that the Administrator has found contribute to air pollution that may be expected to endanger public health and welfare. In setting such standards, the Administrator must provide adequate lead time for the development and application of technology to meet the standards, taking into consideration the cost of compliance. EPA's proposed standards properly implement this statutory provision, as discussed in this Section II.G. In setting standards for a future model year, EPA considers the extent deployment of advanced technologies would be available and warranted in light of the benefits to public health and welfare in GHG emission reductions, and potential constraints, such as cost of compliance, lead time, raw material availability, component supplies, redesign cycles, charging and refueling infrastructure, and purchasers' willingness to purchase (including payback). The extent of these potential constraints has diminished significantly in light of increased and further projected investment by manufacturers, increased and further projected acceptance by purchasers, and significant support from Congress to address such areas as upfront purchase price, charging infrastructure, critical mineral supplies, and domestic supply chain manufacturing. The proposed standards would achieve significant and important reductions in GHG emissions that endanger public health and welfare. Furthermore, as discussed throughout this preamble, the emission reduction technologies needed to meet the proposed standards have already been developed and are feasible and available for manufacturers to utilize in their fleets at reasonable cost in the timeframe of these proposed standards, even after considering key elements including battery manufacturing capacity and critical materials availability.

As discussed throughout this preamble, the emission reduction technologies needed to meet the proposed standards are feasible and available for manufacturers to utilize in HD vehicles in the timeframe of these proposed standards. The proposed emission standards are based on one potential technology path (represented in multiple technology packages for the various HD vehicle regulatory subcategories per MY) that includes adoption rates for both ICE vehicle technologies and zero-emission vehicle technologies that EPA regards as feasible and appropriate under CAA section 202(a) for the reasons given in this Section II.G, and as further discussed throughout Section II and DRIA Chapter 2. For the reasons described in that analysis, EPA believes these technologies can be developed and applied in HD vehicles and adopted at the projected rates for these proposed standards within the lead time provided, as discussed in Section II.F.6 and in DRIA Chapter 2.

EPA also gave appropriate consideration of cost of compliance in the selection of the proposed standards as described in this Section II.G, and as further discussed in Section II.F and DRIA Chapter 2. The MY 2027 through MY 2031 emission standards were developed using less aggressive application rates and, therefore, are projected to have lower technology package costs than the proposed MY 2032 standards. Additionally, as described in this Section II.G and as further discussed in Section II.F and DRIA Chapter 2, we considered impacts on vehicle purchasers and willingness to purchase (including practicability, payback, and costs to vehicle purchasers) in applying constraints in our analysis and selecting the proposed standards.[545] For example, in MY 2032, we estimated that the incremental cost to purchase a ZEV would be recovered in the form of operational savings during the first one to three years of ownership, on average by regulatory group, for the vocational vehicles; approximately three years, on average by regulatory group, for short-haul tractors; and seven years, on average by regulatory group, for long-haul tractors, as shown in the payback analysis included in Section II.F.4. The length of ownership of new tractors varies. One study found that first ownership is customarily four to seven years for For-Hire companies and seven to 12 years for Private fleets.[546] Another survey

[545] Although EPA sometimes describes purchaser response (including purchaser costs) as part of our analysis of feasibility, we emphasize that purchaser response is not a statutorily enumerated factor under section 202(a)(1)–(2). Rather EPA has considered purchaser response in exercising our discretion under the statute, and based on the record before us, the agency views purchaser response as a material aspect of the real-world feasibility of the proposed standards.

[546] Roeth, Mike, et al. ''Barriers to Increased Adoption of Fuel Efficiency Technologies in Freight Trucking,'' Page 24. July 2013. International Council for Clean Transportation. Available at *https://theicct.org/sites/default/files/publications/*

found that the average trade-in cycle for tractors was 8.7 years.[547] Therefore, we find that these tractor technologies on average by regulatory group pay for themselves within the customary ownership timeframe for the initial owner. As we discussed in the HD GHG Phase 2 rulemaking, vocational vehicles generally accumulate far fewer annual miles than tractors and would lead owners of these vehicles to keep them for longer periods of time.[548] To the extent vocational vehicle owners may be similar to owners of tractors in terms of business profiles, they are more likely to resemble private fleets or owner-operators than for-hire fleets. Regardless, the technologies would also pay for themselves on average by regulatory group within the ownership timeframe for vocational vehicles as well.

Moreover, the additional flexibilities beyond averaging already available under EPA's existing regulations, including banking and trading provisions in the ABT program—which, for example, in effect enable manufacturers to spread the compliance requirement for any particular model year across multiple model years—further support EPA's conclusion that the proposed standards provide sufficient time for the development and application of technology, giving appropriate consideration to cost.

The Administrator has significant discretion to weigh various factors under CAA section 202, and, as with the HD GHG Phase 1 and Phase 2 rules, the Administrator notes that the purpose of adopting standards under that provision of the Clean Air Act is to address air pollution that may reasonably be anticipated to endanger public health and welfare and that reducing air pollution has traditionally been the focus of such standards. Taking into consideration the importance of reducing GHG emissions and the primary purpose of CAA section 202 to reduce the threat posed to human health and the environment by air pollution, the Administrator finds it is appropriate to propose standards that, when implemented, would result in meaningful reductions of HD vehicle GHG emissions both near term and over the longer term, and to select such standards taking into consideration the enumerated statutory factors of technological feasibility and cost of compliance within the available lead time, as well as the discretionary factor of impacts on purchasers and willingness to purchase. In identifying the proposed standards, EPA's goal was to maximize emissions reductions given our assessment of technological feasibility and accounting for cost of compliance, lead time, and impacts on purchasers and willingness to purchase. The Administrator concludes that this approach is consistent with the text and purpose of CAA section 202.

There have been very significant developments in the adoption of ZEVs since EPA promulgated the HD GHG Phase 2 rule. One of the most significant developments for U.S. heavy-duty manufacturers and purchasers is the adoption of the IRA, which takes a comprehensive approach to addressing many of the potential barriers to wider adoption of heavy-duty ZEVs in the United States. As noted in Section I, the IRA provides tens of billions of dollars in tax credits and direct Federal funding to reduce the upfront cost of purchasing ZEVs, to increase the number of charging stations across the country, to reduce the cost of manufacturing batteries, and to promote domestic source of critical minerals and other important elements of the ZEV supply chain. By addressing all of these potential obstacles to wider ZEV adoption in a coordinated, well-financed, strategy, Congress significantly advanced the potential for ZEV adoption in the near term.

In developing this estimate, EPA considered a variety of constraints which have to date limited ZEV adoption and/or could limit it in the future, including: cost to manufacturers and purchasers; availability of raw materials, batteries, and other necessary supply chain elements; adequate electricity supply and distribution; and availability of hydrogen. EPA has consulted with analysts from other agencies, including the Federal Energy Regulatory Commission, DOE, DOT, and the Joint Office for Energy and Transportation, extensively reviewed published literature and other data, and, as discussed thoroughly in this preamble and the accompanying DRIA, has incorporated limitations into our modeling to address these potential constraints, as appropriate.

As discussed in Section II.G.4, there are additional considerations that support, but were not used to select, the proposed standards. These include the non-GHG emission and energy impacts, energy security, safety, and net benefits. EPA estimates that the present value of monetized net benefits to society would be approximately $320 billion through the year 2055 (annualized net benefits of $17 billion through 2055),[549] more than five times the cost in vehicle technology and associated electric vehicle supply equipment (EVSE) combined (see preamble Section VII and Chapter 8 of the DRIA). We recognize the these estimates do not reflect unquantified benefits, and the Administrator has not relied on these estimates in identifying the appropriate standards under CAA section 202. Nonetheless, our conclusion that the estimated benefits considerably exceed the estimated costs of the proposed program reinforces our view that the proposed standards represent an appropriate weighing of the statutory factors and other relevant considerations.

In addition to our proposed standards, we also considered and are seeking comment on a range of alternatives above and below the proposed standards, as specified and discussed in Section II.H and Section IX. Our approach and goal in selecting standards were generally the same for the range of alternative standards as they were for the proposed standards, while also recognizing that there are uncertainties in our projections and aiming to identify where additional information that may become available during the course of the rulemaking may support standards within that range as feasible and reasonable. EPA anticipates that the appropriate choice of final standards within this range will reflect the Administrator's judgments about the uncertainties in EPA's analyses as well as consideration of public comment and updated information where available. We considered an alternative with a slower phase-in with less stringent CO_2 emission standards; however, we did not select this level for the proposed standards because our assessment in this proposal is that feasible and appropriate standards are available that provide for greater GHG emission reductions than would be provided by this slower phase-in alternative. We also considered a more stringent alternative with emission standards similar to those required by the CA ACT program. At this time, we consider the proposed standards as the appropriate balancing of the factors. However, if our analysis for the final rule of relevant existing information, public comments, or new information that becomes available between the proposal and the final rule supports a set of standards within the range of alternatives we are requesting comment on, we may promulgate final CO_2 emission standards different from

ICCT-NACFE-CSS_Barriers_Report_Final_20130722.pdf.

[547] American Transportation Research Institute. ''An Analysis of the Operational Costs of Trucking: 2021 Update.'' November 2021. Page 14.

[548] 81 FR 73719 (October 25, 2016).

[549] Using 3 percent discount rate and climate benefits calculated with the average SC–GHGs at a 3 percent discount rate.

those proposed if we determine that those emission standards are feasible and appropriate. For example, we could finalize different standards based on different ZEV adoption rates than described for the proposed standards based on different considerations within the inputs of HD TRUCS or other approaches that we have requested comment on in this proposal (*e.g.* payback schedules, consideration of technology development lead time, ZEV refueling infrastructure growth, consideration of the need for and level of emissions reductions which can be achieved through the standards to protect public health, etc.).

In summary, after consideration of the very significant reductions in GHG emissions, given the technical feasibility of the proposed standards and the moderate costs per vehicle in the available lead time, and taking into account a number of other factors such as the savings to purchasers in operating costs over the lifetime of the vehicle, safety, the benefits for energy security, and the significantly greater quantified benefits compared to quantified costs, EPA believes that the proposed standards are appropriate under EPA's section 202(a) authority.

H. Potential Alternatives

EPA developed and considered an alternative level of proposed stringency for this rule which we are seeking comment on. The results of the analysis of this alternative are included in Section IX of the preamble. We also request comment, including supporting data and analysis, if there are certain market segments, such as heavy-haul vocational trucks or long-haul tractors which may require significant energy content for their intended use, that it may be appropriate to set standards less stringent than the alternative for the specific corresponding regulatory subcategories in order to provide additional lead time to develop and introduce ZEV or other low emissions technology for those specific vehicle applications. As described in more detail throughout this preamble, we also are seeking comment on setting GHG standards that would reflect values less stringent than the lower stringency alternative for certain market segments, values in between the proposed standards and the alternative standards, values in between the proposed standards and those that would reflect ZEV adoption levels used in California's ACT, values that would reflect the level of ZEV adoption in the ACT program, and values beyond those that would reflect ZEV adoption levels in ACT such as the 50- to 60-percent ZEV adoption range represented by the publicly stated goals of several major OEMs for 2030.[550] [551] [552] [553] [554] For all of these scenarios we are requesting comment on, EPA anticipates that the same approach explained in Section II and DRIA Chapter 2 would generally be followed, including for estimating costs, though the rationale for the different ZEV adoption rates may be based on different considerations within the inputs of HD TRUCS or other approaches that we have requested comment on in this proposal (*e.g.* payback schedules, consideration of technology development lead time, ZEV refueling infrastructure growth, etc.). As explained in this Section I.D of the preamble, EPA has significant discretion in choosing an appropriate balance among factors in setting standards under CAA section 202(a)(1)–(2). If our analysis for the final rule of relevant existing information, public comments, or new information that becomes available between the proposal and final rule supports a slower or a more accelerated implementation of the proposed standards, we may promulgate final CO_2 emission standards different from those proposed (within the range between the less stringent alternative and the most stringent standards we request comment on in this section) if we determine that those emission standards are feasible and appropriate.

While our assessment in this proposal is that the proposed standards provide adequate lead time, in order to ensure fulsome comment on all of dynamics involved in the market responding to the proposed standards, we also considered an alternative with less stringent standards and a more gradual phase-in. As discussed in Section II.F.6, we considered while developing the proposed standards that manufacturers would need time to ramp up ZEV production from the numbers of ZEVs produced today to the higher adoption rates we project in the proposed standards that begin between four and eight years from now. Manufacturers would need to conduct research and develop electrified configurations for a diverse set of applications. They would also need time to conduct durability assessments because downtime is very critical in the heavy-duty market. Furthermore, manufacturers would require time to make new capital investments for the manufacturing of heavy-duty battery cells and packs, motors, and other EV components, along with changing over the vehicle assembly lines to incorporate an electrified powertrain. In addition, the purchasers of HD BEVs would need time to design and install charging infrastructure at their facilities or determine their hydrogen refueling logistics for FCEVs. Therefore, we developed and considered an alternative that reflects a more gradual phase-in of ZEV adoption rates to account for this uncertainty. The ZEV adoption rates associated with level of stringency of the proposed CO_2 emission standards shown in Section II.F.4 and the alternative CO_2 emission standards shown in Section IX.A.1 are shown in Table II–34. We are not proposing this alternative set of standards because, as already described, our assessment is that feasible and appropriate standards are available that provide for greater emission reductions than provided under this alternative. We request comment on whether our assessment that there is adequate lead time provided in the proposed standards is correct or if a more gradual phase in like the one described in this alternative would be more appropriate.

[550] California Air Resources Board, Final Regulation Order—Advanced Clean Trucks Regulation. Filed March 15, 2021. Available at: *https://ww2.arb.ca.gov/sites/default/files/barcu/regact/2019/act2019/fro2.pdf.*

[551] Scania, 'Scania's Electrification Roadmap,' Scania Group, November 24, 2021, *https://www.scania.com/group/en/home/newsroom/news/2021/Scanias-electrification-roadmap.html.*

[552] AB Volvo, 'Volvo Trucks Launches Electric Truck with Longer Range,' Volvo Group, January 14, 2022, *https://www.volvogroup.com/en/news-and-media/news/2022/jan/news-4158927.html.*

[553] Deborah Lockridge, 'What Does Daimler Truck Spin-off Mean for North America?,' Trucking Info (November 11, 2021). *https://www.truckinginfo.com/10155922/what-does-daimler-truck-spin-off-mean-for-north-america.*

[554] Navistar presentation at the Advanced Clean Transportation (ACT) Expo, Long Beach, CA (May 9–11, 2022).

TABLE II–34—COMPARISON OF ZEV TECHNOLOGY ADOPTION RATES IN THE TECHNOLOGY PACKAGES CONSIDERED FOR THE PROPOSED STANDARDS AND ALTERNATIVE CONSIDERED

	MY 2027 (%)	MY 2028 (%)	MY 2029 (%)	MY 2030 (%)	MY 2031 (%)	MY 2032 and later (%)
Proposal						
Vocational	20	25	30	35	40	50
Short-Haul Tractors	10	12	15	20	30	35
Long-Haul Tractors	0	0	0	10	20	25
Alternative						
Vocational	14	20	25	30	35	40
Short-Haul Tractors	5	8	10	15	20	25
Long-Haul Tractors	0	0	0	10	15	20

In consideration of the environmental impacts of HD vehicles and the need for significant emission reductions, as well as the views expressed by stakeholders in comments on the HD2027 NPRM such as environmental justice communities, environmental nonprofit organizations, and state and local organizations for rapid and aggressive reductions in GHG emissions,[555] [556] [557] [558] we are also requesting comment on a more stringent set of GHG standards starting in MYs 2027 through 2032 than the proposed standards and requesting that commenters provide supporting information regarding whether such standards are feasible, appropriate, and consistent with our CAA section 202 authority for a national program. We specifically are seeking comment on values that would reflect the level of ZEV adoption used in California's ACT program (as shown in Table II–35), values in between the proposed standards and those that would reflect ZEV adoption levels in ACT, and values beyond those that would reflect ZEV adoption levels in ACT, such as the 50–60 percent ZEV adoption range represented by the publicly stated goals of several major OEMs for 2030.[559] [560] [561] [562] [563] Under any of these more stringent set of standards that we are requesting comment on, we estimate that the individual per-vehicle ZEV technology and operating costs reflecting these higher level of ZEV technology adoption rates would be the same as the individual per-vehicle ZEV costs of the proposed standards, as described in DRIA Chapter 2.8.2 because the costs were calculated as the incremental cost between a ZEV and a comparable ICE vehicle. Also under a scenario with more stringent standards, the total costs across the fleet would be higher but the total emission reductions would be greater. The MYs 2027 through 2032 and beyond emission standards reflecting the ZEV adoptions levels in California's ACT that we are requesting comment on can be found in a memo to the docket.[564]

TABLE II–35—COMPARISON OF ZEV TECHNOLOGY ADOPTION RATES BETWEEN THE PROPOSED STANDARDS AND CALIFORNIA ACT

	MY 2027 (%)	MY 2028 (%)	MY 2029 (%)	MY 2030 (%)	MY 2031 (%)	MY 2032 and later (%)
Proposed						
Vocational	20	25	30	35	40	50
Short-Haul Tractors	10	12	15	20	30	35
Long-Haul Tractors	0	0	0	10	20	25
CARB ACT						
Vocational	20	30	40	50	55	60
Tractors	15	20	25	30	35	40

[555] ACEEE Comments to the HD2027 NPRM. See Docket Entry EPA–HQ–OAR–2019–0055–2852–A1. Referencing Catherine Ledna et al., 'Decarbonizing Medium-& Heavy-Duty On-Road Vehicles: Zero-Emission Vehicles Cost Analysis' (NREL, March 2022), *https://www.nrel.gov/docs/fy22osti/82081.pdf*.

[556] EDF Comments to the HD2027 NPRM. See Docket Entry EPA–HQ–OAR–2019–0055–1265–A1, pp.16–17.

[557] ICCT Comments to the HD2027 NPRM. See Docket Entry EPA–HQ–OAR–2019–0055–1211–A1, p. 6.

[558] Moving Forward Network Comments to the HD2027 NPRM. See Docket Entry EPA–HQ–OAR–2019–0055–1277–A1, pp. 19–20.

[559] California Air Resources Board, Final Regulation Order—Advanced Clean Trucks Regulation. Filed March 15, 2021. Available at: *https://ww2.arb.ca.gov/sites/default/files/barcu/regact/2019/act2019/fro2.pdf*.

[560] Scania, 'Scania's Electrification Roadmap,' Scania Group, November 24, 2021, *https://www.scania.com/group/en/home/newsroom/news/2021/Scanias-electrification-roadmap.html*.

[561] AB Volvo, 'Volvo Trucks Launches Electric Truck with Longer Range,' Volvo Group, January 14, 2022, *https://www.volvogroup.com/en/news-and-media/news/2022/jan/news-4158927.html*.

[562] Deborah Lockridge, 'What Does Daimler Truck Spin-off Mean for North America?,' Trucking Info (November 11, 2021). *https://www.truckinginfo.com/10155922/what-does-daimler-truck-spin-off-mean-for-north-america*.

[563] Navistar presentation at the Advanced Clean Transportation (ACT) Expo, Long Beach, CA (May 9–11, 2022).

[564] U.S. EPA. "Memo to Docket: Potential Federal Heavy-Duty GHG Emission Standards Reflecting Technology Packages Including California's ACT Levels of ZEV Adoption." March 2023. Docket EPA–HQ–OAR–2022–0985.

I. Small Businesses

EPA is proposing to make no changes to (*i.e.,* maintain the existing) MY 2027 and later GHG vehicle emission standards for any heavy-duty manufacturers that meet the ''small business'' size criteria set by the Small Business Administration.[565] In other words, these manufacturers would not be subject to the proposed revised MY 2027 and new MYs 2028 through 2032 and later HD vehicle CO_2 emission standards but would remain subject to the HD vehicle CO_2 emission standards previous set in HD GHG Phase 2.[566] Additionally, we are proposing that qualifying small business manufacturers could continue to average within their averaging sets for each 2027 and later model year to achieve the applicable standards; however, we are proposing to restrict banking, trading, and the use of advanced technology credit multipliers for credits generated against the Phase 2 standards for qualifying manufacturers that utilize this small business interim provision.

We are also proposing that vehicle manufacturers that qualify as a small business may choose not to utilized the proposed interim provision and voluntarily certify their vehicles to the Phase 3 standards without ABT participation restrictions if they certify all their vehicle families within a given averaging set to the Phase 3 standards for the given MY. In other words, small businesses that opt into the Phase 3 program for a given MY for all their vehicle families within a given averaging set would be eligible for the full ABT program for those vehicle families for that MY, including advanced technology credit multipliers. While we are proposing not to apply the proposed new standards for vehicles produced by small businesses, we propose that some small business manufacturers would be subject to some other new requirements we are proposing in this rule related to ZEVs, such as the battery durability monitor and warranty provisions proposed in 40 CFR 1037.115(f) and described in Section III.B.

EPA may consider new GHG emission standards to apply for vehicles produced by small business vehicle manufacturers as part of a future regulatory action. At this time, we believe the proposed new standards, which were developed based on technology packages using increasing adoption of ZEVs, may create a disproportionate burden on small business vehicle manufacturers. As described in DRIA Chapter 9, we have identified a small number of manufacturers that would appear to qualify as small businesses under the heavy-duty vehicle manufacturer category. The majority of these small businesses currently only produce ZEVs, while one company currently produces ICE vehicles.

Since there would only be a small emissions benefit from applying the proposed standards to the relatively low production volume of ICE vehicles produced by small businesses, we believe that maintaining the existing HD vehicle CO_2 standards for these companies at this time would have a negligible impact on the overall GHG emission reductions that the program would otherwise achieve. We request comment on our assessment that the emission impact of this approach for small businesses would be small considering the number and type of vehicle manufacturers described in DRIA Chapter 9.

III. Compliance Provisions, Flexibilities, and Test Procedures

In this proposed rule, we are retaining the general compliance structure of existing 40 CFR part 1037 with some revisions described in this section. Vehicle manufacturers would continue to demonstrate that they meet emission standards using emission modeling and EPA's Greenhouse gas Emissions Model (GEM) and would use fuel-mapping or powertrain test information from procedures established and revised in previous rulemakings.[567]

The existing HD GHG Phase 2 program provides flexibilities, primarily through the HD GHG ABT program, that facilitate compliance with the emission standards. In addition to the general ABT provisions, the current HD GHG Phase 2 program also includes advanced technology credit (including for BEVs and FCEVs) and innovative technology credit provisions. As described in Section II of this preamble, the proposed revisions to the existing MY 2027 Phase 2 GHG emission standards and new proposed standards for MYs 2028 through 2032 are premised on utilization of a variety of technologies, including technologies that are considered advanced technologies in the existing HD GHG Phase 2 ABT program. As also explained in Section II, we consider averaging in supporting the feasibility of the proposed Phase 3 GHG standards in this rule. Averaging and other aspects of the ABT program would also continue to help provide additional flexibility for manufacturers to make necessary technological improvements and reduce the overall cost of the program, without compromising overall environmental objectives.

We are not proposing any changes to and are not reopening the use of credits from MY 2027 and earlier in MY 2027 and later. In other words, credits earned in HD GHG Phase 2 would be allowed to carry over into Phase 3, subject to the existing credit life limitation of five years, as described in 40 CFR 1037.740(c). Similarly, we are not proposing any revisions to and are not reopening the allowance that provides manufacturers three years to resolve credit deficits, as detailed in 40 CFR 1037.745.

In Section III.A, we describe the general ABT program and how we expect manufacturers to apply ABT to meet the proposed standards. In Section III.A, we propose a revision to the definition of ''U.S.-directed production volume'' to clarify consideration in this rulemaking of nationwide production volumes, including those that may in the future be certified to different state emission standards.[568] This proposed revision is intended to address a potential interaction between the existing definition of U.S.-directed production volume and the ACT regulation for HD vehicles.[569] Section III.A.2 includes proposed updates to advanced technology credit provisions after considering comments received on the HD2027 NPRM (87 FR 17592, March 28, 2022). In Section III.A.3, we request comment on other flexibilities, including how credits could be used across averaging sets. In Section III.B,

[565] See our proposed updates to the definition of ''small business'' in 40 CFR 1037.801.

[566] See Section XI.C for our regulatory flexibility assessment of the potential burden on small businesses. See also Section III.C.2 for a description of the proposed revisions to 40 CFR 1037.150(c) that clarify the standards and proposed restrictions on participation in the ABT program for MYs 2027 and later that we are proposing would apply for qualifying small business vehicle manufacturers that utilize the proposed interim provision.

[567] See the HD GHG Phase 2 rule (81 FR 73478, October 25, 2016), the Heavy-Duty Engine and Vehicle Technical Amendment rule (86 FR 34308, June 29, 2021), and the HD2027 rule (88 FR 4296, January 24, 2023). In this rulemaking, EPA is not reopening any portion of our heavy-duty compliance provisions, flexibilities, and testing procedures, including those in 40 CFR parts 1037, 1036, and 1065, other than those specifically identified in this document as the subject of our proposal or a solicitation for comment. For example, while EPA is proposing to revise discrete elements of the HD ABT program, EPA is not reopening the general availability of ABT.

[568] The proposed definition update includes corresponding proposed clarifications throughout the HD engine and vehicle regulations of 40 CFR parts 1036 and 1037, respectively.

[569] EPA granted the ACT rule waiver requested by California under CAA section 209(b) on March 30, 2023.

we propose durability monitoring requirements for BEVs and PHEVs, clarify existing warranty requirements for PHEVs, and propose warranty requirements for BEVs and FCEVs. Finally, in Section III.C, we propose additional clarifying and editorial amendments to the HD highway engine provisions of 40 CFR part 1036, the HD vehicle provisions of 40 CFR part 1037 and the test procedures for HD engines in 40 CFR part 1065.

A. Proposed Revisions to the ABT Program

As noted in the introduction to this section, we are generally retaining the HD GHG Phase 2 ABT program that allows for emission credits to be averaged, banked, or traded within each of the averaging sets specified in 40 CFR 1037.740(a). To generate credits, a vehicle manufacturer must reduce CO_2 emission levels below the level of the standard for one or more vehicle families. The manufacturer can use those credits to offset higher emission levels from vehicles in the same averaging set such that the averaging set meets the standards on ''average'', ''bank'' the credits for later use, or ''trade'' the credits to another manufacturer. The credits are calculated based on the production volume of the vehicles in the averaging set and their respective emission levels relative to the standard. To incentivize the research and development of the new technologies, the current HD vehicle ABT program also includes credit multipliers for certain advanced technologies. In this Section III.A, we describe proposed changes to two aspects of the ABT program: the applicable production volume for use in calculating ABT credits and credit multipliers for advanced technologies. We also request comment on other potential flexibilities we could consider adopting in this rule.

1. U.S-Directed Production Volume

As described in Section II, the proposed Phase 3 GHG vehicle standards include consideration of nationwide production volumes. Correspondingly, we are proposing that the GHG ABT program for compliance with those standards would be applicable to the same production volumes considered in setting the standards. In Section II, we also request comment on how to account for ZEV adoption rates that would result from compliance with the California ACT program in setting the proposed GHG standards.[570] The existing HD GHG Phase 2 vehicle program has certain provisions (based off the regulatory definition of ''U.S.-directed production volume'') that would exclude production volumes that are certified to different state emission standards, including exclusion from participation in ABT. To address this potential interaction between the existing definition of U.S.-directed production volume and the ACT regulation for HD vehicles, we propose a revision to the definition of ''U.S.-directed production volume.'' The proposed revision would clarify that in this rulemaking we consider nationwide production volumes, including those that may in the future be certified to different state emission standards, within the proposed Phase 3 standards described in Section II and within the ABT GHG vehicle program.

The exclusion of engines and vehicles certified to different state standards in the existing definitions have not impacted the HD GHG program under parts 1036 and 1037 to-date because California has adopted GHG emission standards for HD engines and vehicles that align with the Federal HD GHG Phase 1 and Phase 2 standards.[571] [572] As discussed in Section I, the ACT regulation requires manufacturers to produce and sell increasing numbers of zero-emission medium- and heavy-duty highway vehicles. Given the distinct difference between what is required under the ACT compared to the existing Phase 2 vehicle program and the HD vehicle GHG standards proposed under this rulemaking, we are considering the impact of the ACT on the HD GHG vehicle program. To that end, we are proposing that the revision to this definition revision apply starting with MY 2024 to provide consistent treatment of any production volumes certified to ACT. We request comment on the MY 2024 start and whether other options should be considered for transitioning to this new definition.

The existing definition of ''U.S.-directed production volume'' for HD vehicles explicitly does not include vehicles certified to state emission standards that are different than the emission standards in 40 CFR part 1037.[573] The term U.S.-directed production volume is key in how the existing regulations direct manufacturers to calculate credits in the HD vehicle ABT GHG program, in 40 CFR part 1037, subpart H. In the existing regulations, vehicle production volumes that are excluded from that term's definition cannot generate credits. EPA first excluded such production volumes from participation in HD ABT in a 1990 rulemaking on NO_X emissions from HD engines. In the preamble to that rulemaking, which established NO_X and PM banking and trading and expanded the averaging program for HD engines, EPA explained that HDEs certified under the California emission control program are excluded from this program.[574] We further explained that HDEs certified under the California emission control program may not generate credits for use by Federal engines (49-state) or use credits generated by Federal engines.[575] In addition, we explained that while fifty-state engines participating in the Federal banking, trading or averaging programs may be sold in California if their FELs are lower than the applicable emission standard, California engines may not generate credits for the Federal program.[576]

In 2001, in a rulemaking that established criteria pollutant emission standards phasing in to MY 2010 and later for HD engines and vehicles, EPA adopted a definition for ''U.S.-directed production.'' The adopted definition included similar regulatory language to our existing part 1037 definition.[577] Regarding compliance with the MY 2007–2009 emission standards phase-in requirements, which were based on percentage of production volumes meeting the MY 2010 and later standards, EPA again noted our intent to exclude production volumes certified to different state standards. We explained that we were clarifying that this phase-in excludes California complete heavy-

[570] EPA granted the ACT rule waiver requested by California under CAA section 209(b) on March 30, 2023.

[571] California Air Resources Board. ''Final Regulation Order for Phase 1 Greenhouse Gas Regulations.'' December 5, 2014, available at *https://ww2.arb.ca.gov/sites/default/files/barcu/regact/2013/hdghg2013/hdghgfrot13.pdf*.

[572] California Air Resources Board. ''Final Regulation Order for Phase 2 Greenhouse Gas Regulations and Tractor-Trailer GHG Regulations.'' April 1, 2019, available at *https://ww2.arb.ca.gov/sites/default/files/barcu/regact/2018/phase2/finalatta.pdf?_ga=2.122416523.1825165293.1663635303-1124543041.1635770745*.

[573] An equivalent definition of ''U.S-directed production volume'' can be found at 40 CFR 1036.801 for HD engines.

[574] 55 FR 30592, July 26, 1990.

[575] 55 FR 30592, July 26, 1990.

[576] 55 FR 30592, July 26, 1990.

[577] 66 FR 5002, 5159, January 18, 2001 (amending 40 CFR 86.004–2 to add a definition for ''*U.S.-directed* production'' where ''U.S.-directed production means the engines and/or vehicles (as applicable) produced by a manufacturer for which the manufacturer has reasonable assurance that sale was or will be made to ultimate purchasers in the United States, excluding engines and/or vehicles that are certified to state emission standards different than the emission standards in [40 CFR part 86].'').

duty vehicles, which are already required to be certified to the California emission standards.[578] We further explained that the phase-in also excludes vehicles sold in any state that has adopted California emission standards for complete heavy-duty vehicles.[579] We also explained that it would be inappropriate to allow manufacturers to ''double-count'' the vehicles by allowing them to count those vehicles both as part of their compliance with this phase-in and for compliance with California requirements.[580] In addition, we noted that we would handle HD engines similarly if California were to adopt different emission standards than those being established by this rule.[581]

In the HD GHG Phase 1 rule, EPA adopted the existing definitions of U.S.-directed production volume in 40 CFR 1036.801 and 1037.801, which were unchanged in HD GHG Phase 2 and currently apply for HD engines and vehicles.[582]

We are proposing a revision to the definition of ''U.S.-directed production volume'' in 40 CFR 1037.801 such that it represents the total nationwide production volumes, including vehicles certified to state emission standards that are different than the emission standards of 40 CFR part 1037. As described in Section II, the proposed standards are feasible and appropriate based on nationwide adoption rates of technology packages that include adoption of ZEV technologies. Manufacturers may be motivated to produce ZEVs by this rule and in response to other initiatives and we want to support any U.S. adoption of these technologies by allowing manufacturers to account for their nationwide production volumes to comply with the proposed standards. We recognize that the existing definition of ''U.S.-directed production volume'' may cause challenges to manufacturer plans, including long-term compliance planning, due to the uncertainty surrounding whether additional states may adopt more stringent standards in the future.

Given that EPA granted the ACT rule waiver requested by California under CAA section 209(b) on March 30, 2023, the existing definition of U.S.-directed production volume excludes all vehicles (ICE vehicles and ZEVs) certified to meet the ACT program in California and any other states that adopt the ACT.[583] In this scenario, the ZEV production volumes destined for California and other states would correspond to a large portion of the nationwide production on which the proposed EPA standards are based, and it would be challenging for vehicle manufacturers to comply with the proposed standards if they could not account for those ZEVs. As described in Section II, we request comment on how to account for ZEV adoption rates that would result from compliance with the California ACT program in setting the proposed GHG standards. If we were to finalize standards that account for the ACT program, we expect to similarly base the final standards on nationwide production volumes that would continue to rely on our proposal to revise the current definition of U.S.-directed production volume to include nationwide production.

We are proposing this revision consistent with our intended approach of considering such production volumes in setting the stringency of the Phase 3 standards in this rulemaking, as well as allowing inclusion of such production volumes in demonstrating compliance with the standards through participation in the HD vehicle ABT GHG program. We believe this approach would address both the potential ''double counting'' issue EPA previously articulated in past HD rulemakings and the potential difficulties surrounding manufacturers' long-term compliance planning (due to the uncertainty surrounding whether additional states may adopt the California ACT program in the future) we recognize in the context of this rulemaking. Our proposed revision would also align with the approach in the LD GHG program.

In addition to this proposed revision to the definition of ''U.S.-directed production volume'', we are proposing additional conforming amendments throughout 40 CFR part 1037 to streamline references to the revised definition; see Section III.E.3 for further discussion on one of those proposed revisions.[584]

2. Advanced Technology Credits for CO_2 Emissions

In HD GHG Phase 1, we provided advanced technology credits for hybrid powertrains, Rankine cycle waste heat recovery systems on engines, all-electric vehicles, and fuel cell electric vehicles to promote the implementation of advanced technologies that were not included in our technical basis of the feasibility of the Phase 1 emission standards (see 40 CFR 86.1819–14(k)(7), 1036.150(h), and 1037.150(p)). The HD GHG Phase 2 CO_2 emission standards that followed Phase 1 were premised on the use of mild hybrid powertrains in vocational vehicles and waste heat recovery systems in a subset of the engines and tractors, and we removed mild hybrid powertrains and waste heat recovery systems as options for advanced technology credits. At the time of the HD GHG Phase 2 final rule, we believed the HD GHG Phase 2 standards themselves provided sufficient incentive to develop those specific technologies. However, none of the HD GHG Phase 2 standards were based on projected utilization of the other even more-advanced Phase 1 advanced credit technologies (*e.g.,* plug-in hybrid electric vehicles, all-electric vehicles, and fuel cell electric vehicles). For HD GHG Phase 2, EPA promulgated advanced technology credit multipliers through MY 2027, as shown in Table III–1 (see also 40 CFR 1037.150(p)).

TABLE III–1—ADVANCED TECHNOLOGY MULTIPLIERS IN EXISTING HD GHG PHASE 2 FOR MYS 2021 THROUGH 2027

Technology	Multiplier
Plug-in hybrid electric vehicles	3.5
All-electric vehicles	4.5
Fuel cell electric vehicles	5.5

As stated in the HD GHG Phase 2 rulemaking, our intention with these multipliers was to create a meaningful incentive for those manufacturers considering developing and applying these qualifying advanced technologies into their vehicles. The multipliers under the existing program are consistent with values recommended by CARB in their HD GHG Phase 2 comments.[585] CARB's values were based on a cost analysis that compared the costs of these advanced technologies to costs of other GHG-reducing

[578] 66 FR at 5043, January 18, 2001.

[579] 66 FR at 5043, January 18, 2001.

[580] 66 FR at 5043, January 18, 2001.

[581] 66 FR at 5043, January 18, 2001.

[582] 76 FR 57397 and 57431, September 15, 2011; 81 FR 74043 and 74123, October 25, 2016.

[583] As of September 2022, the following states have adopted California's ACT program: Massachusetts, New York, New Jersey, Washington, and Oregon.

[584] As discussed in Section III.C.3, we are also proposing a similar update to the heavy-duty highway engine definition of ''U.S.-directed production volume'' in 40 CFR 1036.801, with additional proposed updates where it is necessary to continue to exclude production volumes certified to different standards (*i.e.,* the ABT program for highway heavy-duty engines).

[585] Letter from Michael Carter, CARB, to Gina McCarthy, Administrator, EPA and Mark Rosekind, Administrator, NHTSA, June 16, 2016. EPA Docket ID EPA–HQ–OAR–2014–0827_attachment 2.

technologies. CARB's cost analysis showed that multipliers in the range we ultimately promulgated as part of the HD GHG Phase 2 final rule would make these advanced technologies more competitive with the other GHG-reducing technologies and could allow manufacturers to more easily generate a viable business case to develop these advanced technologies for HD vehicles and bring them to market at a competitive price.

In establishing the multipliers in the HD GHG Phase 2 final rule, we also considered the tendency of the HD sector to lag behind the light-duty sector in the adoption of a number of advanced technologies. There are many possible reasons for this, such as:

- HD vehicles are more expensive than light-duty vehicles, which makes it a greater monetary risk for purchasers to invest in new technologies.
- These vehicles are primarily work vehicles, which makes predictable reliability and versatility important.
- Sales volumes are much lower for HD vehicles, especially for specialized vehicles.

At the time of the HD GHG Phase 2 rulemaking, we concluded that as a result of factors such as these, and the fact that adoption rates for the aforementioned advanced technologies in HD vehicles were essentially non-existent in 2016, it seemed unlikely that market adoption of these advanced technologies would grow significantly within the next decade without additional incentives.

As we stated in the HD GHG Phase 2 final rule preamble, our determination that it was appropriate to provide large multipliers for these advanced technologies, at least in the short term, was because these advanced technologies have the potential to lead to very large reductions in GHG emissions and fuel consumption, and advance technology development substantially in the long term. However, because the credit multipliers are so large, we also stated that they should not necessarily be made available indefinitely. Therefore, they were included in the HD GHG Phase 2 final rule as an interim program continuing only through MY 2027.

The HD GHG Phase 2 CO_2 emission credits for HD vehicles are calculated according to the existing regulations at 40 CFR 1037.705. For BEVs and FCEVs, the family emission level (FEL) value for CO_2 emissions is deemed to be 0 grams per ton-mile.[586] Under those existing regulations, the CO_2 emission credits for HD BEVs built between MY 2021 and MY 2027 would be multiplied by 4.5 (or the values shown in Table III–1 for the other technologies) and, for discussion purposes, can be visualized as split into two shares.[587] The first share of credits would come from the reduction in CO_2 emissions realized by the environment from a BEV that is not emitting from the tailpipe, represented by the first 1.0 portion of the multiplier. Therefore, each BEV or FCEV produced receives emission credits equivalent to the level of the standard, even before taking into account the effect of a multiplier. The second share of credits does not represent CO_2 emission reductions realized in the real world but rather, as just explained, was established by EPA to help incentivize a nascent market: in this example, the emission credits for BEVs built between MY 2021 and 2027 receive an advanced technology credit multiplier of 4.5, *i.e.,* an additional 3.5 multiple of the standard.

The HD GHG Phase 2 advanced technology credit multipliers represent a tradeoff between incentivizing new advanced technologies that could have significant benefits well beyond what is required under the standards and providing credits that do not reflect real world reductions in emissions, which could allow higher emissions from credit-using engines and vehicles. At low adoption levels, we believe the balance between the benefits of encouraging additional electrification as compared to any negative emissions impacts of multipliers would be appropriate and would justify maintaining the current advanced technology multipliers. At the time we finalized the HD GHG Phase 2 program in 2016, we balanced these factors based on our estimate that there would be very little market penetration of ZEVs in the heavy-duty market in the MY 2021 to MY 2027 timeframe, during which the advanced technology credit multipliers would be in effect. Additionally, the primary technology packages in our technical basis of the feasibility of the HD GHG Phase 2 standards did not include any ZEVs.

In our assessment conducted during the development of HD GHG Phase 2, we found only one manufacturer had certified HD BEVs through MY 2016, and we projected ''limited adoption of all-electric vehicles into the market'' for MYs 2021 through 2027.[588] However, as discussed in Section II, we are now in a transitional period where manufacturers are actively increasing their PHEV, BEV, and FCEV HD vehicle offerings and are being further supported through the IRA tax credits, and we expect this growth to continue through the remaining timeframe for the HD GHG Phase 2 program and into the proposed Phase 3 program timeframe.

i. Advanced Technology Credits in the HD2027 NPRM

We requested comment in the HD2027 NPRM on three approaches that would reduce the number of incentive credits produced by battery electric vehicles in the MY 2024 through MY 2027 timeframe. The three approaches considered in the HD2027 NPRM (87 FR 17605–17606) are summarized as follows:

- *Approach 1:* The MY 2024 through MY 2027 ZEVs certified in California to meet the ACT program would not receive the advanced technology credit multipliers that currently exist.
- *Approach 2:* The advanced technology credits generated by a manufacturer would be capped on an annual basis. Advanced technology credits generated for EVs on an annual basis that are under a cap would remain unchanged. Above the cap, the multipliers would effectively be a value of 1.0; in other words, after a manufacturer reaches their cap in any model year, the multipliers would no longer be available and would have no additional effect on credit calculations. This advanced technology credit cap approach would limit the credits generated by a manufacturer's use of the advanced technology credit multipliers for battery electric vehicles to the following levels of CO_2 per manufacturer per model year beginning in MY 2024 and extending through MY 2027:
  - Light Heavy-Duty Vehicle Averaging Set: 42,000 Mg CO_2.
  - Medium Heavy-Duty Vehicle Averaging Set: 75,000 Mg CO_2.
  - Heavy Heavy-Duty Vehicle Averaging Set: 325,000 Mg CO_2.
- *Approach 3:* Phase-out the magnitude of the credit multipliers from MY 2024 through MY 2027.

EPA received a number of comments on the HD2027 NPRM in response to our request for comment on potential approaches to modify the existing Advanced Technology Credit multipliers. The entire set of comments may be found in Section 28 of EPA's Response to Comments Document for the HD2027 final rule.[589]

Several commenters supported Approach 1, sometimes along with

[586] 40 CFR 1037.150(f).

[587] 40 CFR 1037.705.

[588] 81 FR 75300 (October 25, 2016).

[589] U.S. EPA, ''Control of Air Pollution from New Motor Vehicles: Heavy-Duty Engine and Vehicle Standards—Response to Comments.'' Section 28. Docket EPA–HQ–OAR–2019–0055.

Approach 3. A common theme in these comments was that the incentive provided by the credit multipliers is not warranted for ZEVs that will already be produced due to state requirements. Some commenters also stated that the credit multipliers should not apply to any state that adopts ACT and should not be limited to California. Another commenter suggested an alternate approach whereby credit multipliers would not be provided for the vehicle segments targeted in the HD2027 NPRM for early adoption, such as some vocational vehicles and short-haul tractors, but remain available for other vehicle segments.

Other commenters raised concerns with Approach 1. For example, some commenters stated that the states' adoption of the ACT rule is unpredictable and may have a negative impact on manufacturer and supplier development plans. Another commenter raised a concern that eliminating the credit multipliers for ZEVs sold in California could impact manufacturers unequally and have a greater negative impact on manufacturers with more ZEV sales in California. One commenter suggested that this approach would create a disincentive for additional states to adopt ACT. Another commenter recommended that if EPA selects this approach, then EPA should consider allowing credit multipliers for ZEVs sold in California that exceed the ACT sales requirements. Finally, another commenter raised concerns about the implementation of this approach because it is difficult for manufacturers to account for sales by state in the heavy-duty market.

No commenters expressed support for Approach 2, and some commenters raised potential concerns with this approach. For example, a commenter stated this approach creates a disincentive to produce ZEVs above the annual cap and would negatively impact manufacturers that sell a greater number of ZEVs by making a smaller percentage of their fleet eligible for the credit multipliers. One commenter questioned whether a cap approach, while an incentive to small manufacturers and low volume ZEV producers, would incentivize additional sales beyond what is required by the states that adopt ACT under CAA section 177.

Many commenters supported a phase out or elimination of the credit multipliers, similar to Approach 3. A theme among many of the commenters was to phase out the credit multiplier as soon as practicable, with some commenters suggesting the phase out begin as early as MY 2024. On the other hand, two commenters suggested an annual decrease in the value of the credit multipliers to prevent a potential pre-buy situation. Common themes expressed by the commenters supporting an elimination of phase-out of the credit multipliers included stating that the credit multipliers are no longer necessary because of state requirements and that the credit multipliers reduce the overall effectiveness of the HD GHG regulatory program. One concern raised by a commenter is that the existing credit multipliers would slow the progression of CO_2-reducing technologies for HD vehicles that are powered by ICE. Some commenters suggested removing the credit multipliers for all of the existing technologies qualifying for advanced technology credits, including PHEVs, BEVs, and FCEVs.

Some of the commenters opposed any changes to the existing credit multipliers. Some commenters indicated that the credit multipliers are necessary to justify the research and development of these new and higher-cost technologies into new markets. They also noted that the credit multipliers provide a role in the overall suite of incentives for ZEVs and infrastructure in the HD market. Two commenters suggested extending the credit multipliers beyond MY 2027 to allow the HD ZEV market to further mature.

ii. Proposed Changes to the Advanced Technology Credit Multipliers

While we did anticipate some growth in electrification would occur due to the credit incentives in the HD GHG Phase 2 final rule when we finalized the rule, we did not expect the level of innovation since observed, the IRA or BIL incentives, or that California would adopt the ACT rule at the same time these advanced technology multipliers were in effect. Based on this new information, we believe the existing advanced technology multiplier credit levels may no longer be appropriate for maintaining the balance between encouraging manufacturers to continue to invest in new advanced technologies over the long term and potential emissions increases in the short term. We believe that, if left as is, the multiplier credits could allow for backsliding of emission reductions expected from ICE vehicles for some manufacturers in the near term (*i.e.,* the generation of excess credits which could delay the introduction of technology in the near or mid-term) as sales of advanced technology vehicles which can generate the incentive credit continue to increase.

After considering the comments received on the HD2027 NPRM and the proposed HD vehicle Phase 3 GHG standards and program described in Section II and this Section III, we propose to phase-out the advanced technology credit multipliers for HD plug-in hybrid and battery electric vehicles after MY 2026, one year earlier than what is currently in the regulations. We weighed several considerations in proposing this one year earlier phase-out. We do not foresee a need for any advanced technology credits for these technologies to extend past MY 2026. We recognize the need to continue to incentivize the development of BEVs in the near-term model years, prior to MY 2027. However, our analysis of the feasibility of PHEVs and BEVs described in Section II indicates there is sufficient incentive for those technologies for the model years we are proposing HD vehicle Phase 3 GHG emission standards (MYs 2027 through 2032). We note that we did not rely on credits generated from credit multipliers in developing the proposed HD vehicle Phase 3 emission standards, however this flexibility further supports the feasibility of the proposed Phase 3 emission standards.

As explained earlier in this subsection, we recognize that a portion of the credits that result from an advanced technology multiplier do not represent CO_2 emission reductions realized in the real world and thus should be carefully balanced amongst the other considerations. We considered that we are proposing to revise the existing regulatory definition of ''U.S.-directed production volume,'' as discussed in Section II, such that vehicle production volumes sold in California or Section 177 states that adopt ACT would be included in the ABT credit calculations and continuing to allow these multipliers could create a large bank of credits with the potential to delay the real world benefits of the proposed program. We also took into consideration that the IRA and other new incentives are available that could help reduce the role of the multipliers. Finally, we recognize that some manufacturers' long-term product plans for PHEV or BEV technologies may have extended to model years closer to MY 2027 when the HD GHG Phase 2 standards were at their most stringent levels. We are proposing a MY 2026 phase-out for PHEV and BEV credit multipliers, in part, because it is expected to have a lesser impact on current manufacturer product plans. We request comment on our proposed MY

2026 phase-out date or whether we should consider other approaches to account for ACT or incentive programs.

We propose to revise existing 40 CFR 1037.150(p) to reflect the proposed phase-out of advanced technology credit multipliers for BEVs and PHEVs and clarify the applicable standards for calculating credits. We propose parallel edits to existing 40 CFR 1037.615(a) to clarify when the advanced technology credit calculations described in that section would apply. We are not proposing any changes to the existing advanced technology multipliers for fuel cell electric vehicles, which continue to apply through MY 2027. We believe it is still appropriate to incentivize fuel cell technology, because it has been slower to develop in the HD market, as discussed in Section II.D, but request comment on this approach for FCEVs. Additionally, we are retaining and are not reopening the existing off-cycle provisions of 40 CFR 1037.610 that allow manufacturers to request approval for other ''innovative'' technologies not reflected in GEM.

3. Other Potential HD CO_2 Emission Credit Flexibilities

We recognize that the proposed HD GHG Phase 3 standards would require significant investments from manufacturers to reduce GHG emissions from HD vehicles. We request comment on the potential need for additional flexibilities to assist manufacturers in the implementation of Phase 3.

Specifically, we request comment on providing the flexibility for manufacturers to use advanced technology credits across averaging sets, subject to a cap. In HD GHG Phase 1, the advanced technology credits earned a multiplier of 1.5 and they could be applied to any heavy-duty engine or vehicle averaging set.[590] To prevent market distortions, we capped the amount of advanced credits that could be brought into any service class in any model year of the Phase 1 program at 60,000 Mg. In HD GHG Phase 2, we adopted larger advanced technology multipliers, and we discontinued the allowance for advanced technology credits to be used across averaging sets. The primary reason for the averaging set restriction was to reduce the risk of market distortions if we allowed the use of the credits across averaging sets combined with the larger credit multipliers.[591] As discussed in Section III.A.2, we are proposing to phase-out the advanced technology credit multipliers for HD plug-in hybrid and battery electric vehicles after MY 2026, one year earlier than what is currently in the regulations, and under the existing regulations the fuel cell electric vehicle advanced technology multipliers end after MY 2027.

We recognize the proposed Phase 3 standards would require the increasing use of CO_2 emission reducing technologies. During this proposed Phase 3 standards transition, we are considering whether additional flexibilities in the Phase 3 program emissions credit ABT program design may be warranted, similar to the Phase 1 provision which allowed credits generated from advanced technologies to be transferred across averaging sets. We request comment on including a similar flexibility for the Phase 3 program. For example, we may consider an interim provision that would allow vehicle CO_2 credits generated by PHEVs, BEVs, and FCEVs to be used across vehicle averaging sets or possibly across engine averaging sets as specified in 40 CFR part 1036. If we were to adopt such an allowance, we would expect this flexibility to begin with MY 2027 and end after the last year the new Phase 3 standards phase-in, which as proposed is after MY 2032. We also would expect to restrict the number of credits (*i.e.,* the quantity of CO_2 megagrams) that could be transferred from one averaging set to another in a given model year, considering the level of the standards and our goal to prevent market distortions, and we request comment on what an appropriate restriction should be. We also may set different credits transfer cap values per averaging set that vary across the various averaging sets. We request comment on the model years and credit volume limitations we should consider for such an allowance for PHEV, BEV, and FCEV generated CO_2 credits. We also request comment on extending this flexibility with some restrictions to the PHEV, BEV, and FCEV generated CO_2 credits from chassis-certified Class 2b and Class 3 vehicles. More specifically, we request comment on allowing PHEV, BEV, and FCEV generated CO_2 credits in the chassis-certified Class 2b and Class 3 vehicle category (under the part 86, subpart S ABT program for MYs 2027–2032) to be used in the HD Phase 3 light heavy-duty and medium heavy-duty vehicle averaging sets (under the part 1037 ABT program for MYs 2027–2032) in a single direction of movement (*i.e.,* not into the heavy heavy-duty averaging set, and not allowing HD Phase 3 credits from light heavy-duty and medium heavy-duty averaging sets to be transferred into the chassis-certified Class 2b and Class 3 vehicle category), and similarly request comment on what appropriate restrictions to MYs and credit volume limitations should be included if adopted.

We also request comment on considerations of a program similar to CARB's credit program included in their ACT rule. As briefly described in DRIA Chapter 1.3.3, CARB would apply vehicle class-specific ''weight class modifiers'' (*i.e.,* credit multipliers) for credits generated by ZEVs and near zero-emission vehicles to further incentivize adoption electrification of the larger vehicle classes.[592]

B. Battery Durability Monitoring and Warranty Requirements

This section describes our proposal to adopt battery durability monitoring requirements for BEVs and PHEVs and to clarify how warranty applies for several advanced technologies. Our proposal is motivated by three factors: BEV, PHEV, and FCEV are playing an increasing role in vehicle manufacturers' compliance strategies to control GHG emissions from HD vehicles; BEV, PHEV, and FCEV durability and reliability are important to achieving the GHG emissions reductions projected by this proposed program; and that GHG emissions credit calculations are based on mileage over a vehicle's full useful life.

1. Battery and Plug-In Hybrid Electric Vehicle Durability Monitoring Requirements

EPA's HD vehicle GHG emission standards apply for the regulatory useful life of the HD vehicle, consistent with CAA section 202(a)(1) (''Such standards shall be applicable to such vehicles and engines for their useful life''). Accordingly, EPA has historically required manufacturers to demonstrate the durability of their emission control systems on vehicles, including under our CAA section 206 authority. Without durability demonstration requirements, EPA would not be able to assess whether vehicles originally manufactured in compliance with relevant emissions standards would remain compliant over the course of their useful life. Recognizing that BEVs, PHEVs, and FCEVs are playing an increasing role in manufacturers' compliance strategies, and that emission credit calculations are based on mileage over a vehicle's useful life, the same logic applies to BEV, PHEV, and FCEV

[590] 40 CFR 1036.740(c) and 1037.740(b).

[591] 81 FR 73498 (October 25, 2016).

[592] California Air Resources Board, Final Regulation Order—Advanced Clean Trucks Regulation. Section 1963.2. Filed March 15, 2021. Available at: *https://ww2.arb.ca.gov/sites/default/files/barcu/regact/2019/act2019/fro2.pdf.*

durability. Under 40 CFR part 1037, subpart H, credits are calculated by determining the family emission limit (FEL) each vehicle achieves beyond the standard and multiplying that by the production volume and a useful life mileage attributed to each vehicle subfamily.[593] Having a useful life mileage figure for each vehicle subfamily is integral to calculating the credits attributable to that vehicle, whether those credits are used for calculating compliance through averaging, or for banking or trading. Compliance with standards through averaging depends on all vehicles in the regulatory subcategory, or averaging set, achieving their certified level of emission performance throughout their useful life. As explained in Section II and this Section III, EPA also anticipates most if not all manufacturers would include the averaging of credits generated by BEVs and FCEVs as part of their compliance strategies for the proposed standards, thus this is a particular concern given that the calculation of credits for averaging (as well as banking and trading) depend on the battery and emission performance being maintained for the full useful life of the vehicle. Thus, without durability requirements applicable to such vehicles guaranteeing certain performance over the entire useful life of the vehicles, EPA is mindful that there would not be a guarantee that a manufacturer's overall compliance with emission standards would continue throughout that useful life. Similarly, EPA is concerned that we would not have assurance that the proposed standards would achieve the emission reductions projected by this proposed program. Therefore, EPA is proposing new battery durability monitoring for HD BEVs and PHEVs as a first key step towards this end, beginning with MY 2027.

As implemented by light-duty vehicle manufacturers in current BEVs and PHEVs, lithium-ion battery technology has been shown to be effective and durable for use and we expect that this will also be the case for HD BEVs and PHEVs. It is also well known that the energy capacity of a battery will naturally degrade to some degree with time and usage, resulting in a reduction in driving range as the vehicle ages. The degree of this energy capacity and range reduction effectively becomes an issue of durability if it negatively affects how the vehicle can be used, or how many miles it is likely to be driven during its useful life.

Vehicle and engine manufacturers are currently required to account for potential battery degradation in both hybrid and plug-in hybrid vehicles that could result in an increase in CO_2 emissions (see, *e.g.,* existing 40 CFR 1037.241(c) and 1036.241(c)).[594] In addition, engine manufacturers are required to demonstrate compliance with criteria pollutant standards using fully aged emission control components that represent expected degradation during useful life (see, *e.g.,* 40 CFR 1036.235(a)(2) and 1036.240). EPA is applying this well-established approach to the durability of BEV and PHEV batteries by proposing to require battery durability monitoring.

The proposed requirements are similar to the battery durability monitor regulation framework developed by the United Nations Economic Commission for Europe (UN ECE) and adopted in 2022 as Global Technical Regulation (GTR) No. 22. The proposed durability monitoring regulations would require manufacturers of BEVs and PHEVs to develop and implement an on-board state-of-certified-energy (SOCE) monitor that can be read by the vehicle user. We are not proposing durability monitoring requirements for FCEVs at this time because the technology is currently still emerging in heavy-duty vehicle applications and we are still learning what the appropriate metric might be for quantifying FCEV performance.

The importance of battery durability in the context of zero-emission and hybrid vehicles, such as BEVs and PHEVs, is well documented and has been cited by several authorities in recent years. In their 2021 report, the National Academies of Science (NAS) identified battery durability as an important issue with the rise of electrification. Among the findings outlined in that report, NAS noted that: ''battery capacity degradation is considered a barrier for market penetration of BEVs,'' and that ''[knowledge of] real-world battery lifetime could have implications on R&D priorities, warranty provision, consumer confidence and acceptance, and role of electrification in fuel economy policy.'' NAS also noted that ''life prediction guides battery sizing, warranty, and resale value [and repurposing and recycling]'', and discussed at length the complexities of state of health (SOH) estimation, life-cycle prediction, and testing for battery degradation.[595]

Several rulemaking bodies have also recognized the importance of battery durability in a world with rapidly increasing numbers of zero-emission vehicles. In 2015, the United Nations Economic Commission for Europe began studying the need for a GTR governing battery durability in light-duty vehicles. In 2021, it finalized United Nations GTR No. 22, ''In-Vehicle Battery Durability for Electrified Vehicles,'' [596] which provides a regulatory structure for contracting parties to set standards for battery durability in light-duty BEVs and PHEVs. In 2022, the United Nations Economic Commission for Europe began studying the need for a GTR governing battery durability in heavy-duty vehicles. EPA representatives chaired the informal working group that developed the GTR and worked closely with global regulatory agencies and industry partners to complete its development in a form that could be adopted in various regions of the world, including potentially the United States. The European Commission and other contracting parties have also recognized the importance of durability provisions and are working to adopt the GTR standards in their local regulatory structures. In addition, the California Air Resources Board, as part of the Zero-Emission Powertrains (ZEP) Certification program, has also included battery durability and warranty requirements as part of a suite of customer assurance provisions designed to ensure that zero-emission vehicles maintain similar standards for usability, useful life, and maintenance as for ICE vehicles.[597]

EPA concurs with the emerging consensus that battery durability is an important issue. The ability of a zero-emission vehicle to achieve the expected emission reductions during its lifetime depends in part on the ability of the battery to maintain sufficient

[593] The useful life values for the HD vehicle standards are located in 40 CFR 1037.105(e) and 1037.106(e).

[594] As discussed in Section III.C.3.vi, we are proposing to remove 40 CFR 1037.241(b), which if finalized, 40 CFR 1037.241(c) will be moved to 40 CFR 1037.241(b).

[595] National Academies of Sciences, Engineering, and Medicine 2021. ''Assessment of Technologies for Improving Light-Duty Vehicle Fuel Economy 2025–2035''. Washington, DC: The National Academies Press. *https://doi.org/10.17226/26092, p. 5–113 to 5–115.*

[596] United Nations Economic Commission for Europe, Addendum 22: United Nations Global Technical Regulation No. 22, United Nations Global Technical Regulation on In-vehicle Battery Durability for Electrified Vehicles, April 14, 2022. Available at: *https://unece.org/sites/default/files/2022-04/ECE_TRANS_180a22e.pdf.*

[597] California Air Resources Board. ''Attachment C: California Standards and Test Procedures for New 2021 and Subsequent Model Heavy-Duty Zero-Emissions Powertrains'', available at: *https://ww2.arb.ca.gov/sites/default/files/barcu/regact/2019/zepcert/froattc.pdf* (last accessed September 20, 2021) (see Section D for details of CARB rated energy capacity test procedure requirements).

driving range, capacity, power, and general operability for a period of use comparable to that expected of a comparable ICE vehicle. Durable and reliable electrified vehicles are therefore critical to ensuring that projected emissions reductions are achieved by this proposed program.

Because vehicle manufacturers can use electrification as an emissions control technology to comply with EPA standards as well as generate credits for use in averaging, and also banking and trading, EPA believes that it is appropriate to set requirements to ensure that electrified vehicles certifying to EPA standards are durable and capable of providing the anticipated emissions reductions, including those that they are credited under our provisions. For example, in order for the environmental emission reductions that are credited to BEVs and PHEVs to be fully realized under this proposed rule's structure, it is important that their potential to achieve a similar mileage during their lifetime be comparable to that assumed for ICE vehicles in the same vehicle service class. In addition, under the EPA GHG program, BEVs and PHEVs generate credits that can be traded among manufacturers and used to offset debits generated by vehicles using other technologies that do not themselves meet the proposed standards. In either case, if credits generated by zero-emission vehicles are to offset debits created by other vehicles on an equivalent basis, it is thus important that they should be capable of achieving a similar mileage, and this depends, in part, on the life of the battery. Further, if BEVs and PHEVs were less durable than comparable ICE vehicles, this could result in increased use of ICE vehicles. In particular, and especially for vehicles with shorter driving ranges, loss of a large portion of the original driving range capability as the vehicle ages could reduce the ability for zero-emission miles to displace greater-than-zero-emission miles traveled, as well as undermine purchaser confidence in this emerging but highly effective technology.

We proposed a specific durability testing requirement in the HD2027 NPRM and received comment on that proposal, including comment stating that the requirements could result in increases in the battery capacity beyond what was needed to meet the job of the customer. Due to these concerns and because we are still evaluating the range of durability metrics that could be used for quantifying HD BEV performance, EPA is not proposing specific durability testing requirements in this rule. However, EPA is including in this proposal a requirement for a battery durability monitor that would be applicable to HD BEVs and PHEVs. The battery durability monitor proposal would require manufacturers to provide a customer-facing battery state-of-health (SOH) monitor for all heavy-duty BEVs and PHEVs. We are proposing a new 40 CFR 1037.115(f) that would require manufacturers to install a customer-accessible SOH monitor which estimates, monitors, and communicates the vehicle's state of certified energy (SOCE) as it is defined in GTR No. 22.[598] Specifically, manufacturers would implement onboard algorithms to estimate the current state of health of the battery, in terms of the state of its usable battery energy (UBE) expressed as a percentage of the original UBE when the vehicle was new.

For HD PHEVs, we are proposing that manufacturers would use the existing powertrain test procedures defined in 40 CFR 1036.545 to determine UBE.[599] The powertrain test procedures requires that PHEVs be tested in charge depleting and charge sustaining modes using a range of vehicle configurations. For the determination of UBE, we are proposing that the PHEV manufacturer would select the most representative vehicle configuration.

For HD BEVs, we are proposing that manufacturers develop their own test procedures for determining UBE. This is due to the range of HD BEV architectures, and the limited test facilities for conducting powertrain testing of BEVs with e-axles. With the SOCE being a relative measure of battery health and not absolute UBE, we believe that leaving the test procedure up to the manufacturer will still provide a meaningful measure of the health of the battery. We also believe that requiring the SOH to be customer-accessible will provide assurance that the SOH monitor is relatively accurate while also providing more time for EPA to work with manufacturers to develop a standardized test procedure for determining UBE for HD BEVs.

We proposed a specified test procedure to determine UBE in the HD2027 NPRM and received comment on that proposal, including comment requesting changes to the proposed test procedure, which EPA considered in developing this proposal's approach. EPA requests comment both on this rule's proposed approach and on an alternative approach of EPA defining a test procedure to determine UBE, such as the test procedure EPA proposed in the HD2027 NPRM, CARB zero-emission powertrain certification, and the test procedures being considered by the UN ECE EVE IWG.[600] Regarding our request for comment on the HD2027 NPRM test procedure, we note that one of the main concerns with the test procedure in submitted comments on the HD2027 NPRM was that commenters stated the powertrain test cell required for powertrains with e-axles were not widely available, and we believe there has been some indication that this is changing; we request comment on this issue. Regarding our request for comment on the test procedures being considered by the UN ECE EVE IWG, we note that some of these test procedures don't rely on chassis or powertrain dynamometers, like the charge-discharge test procedure, and request comment on this issue.

Many of the organizations and authorities that have examined the issue of battery durability, including the UN Economic Commission for Europe, the European Commission, and the California Air Resources Board, have recognized that monitoring driving range as an indicator of battery durability performance (instead of or in addition to UBE) may be an attractive option because driving range is a metric that is more directly experienced and understood by the consumer. While we are not proposing to require that heavy-duty BEVs and PHEVs implement a state-of-certified-range (SOCR) monitor, we are requesting comment on whether we should require the SOCR monitor defined in GTR No. 22.

2. Battery and Fuel Cell Electric Vehicle Component Warranty

EPA is proposing new warranty requirements for BEV and FCEV batteries and associated emission-related electric powertrain components (*e.g.,* fuel-cell stack, electric motors, and inverters) and is proposing to clarify how existing warranty requirements apply for PHEVs.[601] The proposed warranty requirements build on existing emissions control warranty provisions by establishing specific new requirements tailored to the emission control-related role of the high-voltage

[598] We are proposing to incorporate by reference the UN Economic Commission for Europe document as described in Section XI.I.

[599] We are proposing to move the existing powertrain procedure from its current location in 40 CFR 1037.550 to the heavy-duty highway engine provisions as a new 40 CFR 1036.545. See Section III.C.3 for more information.

[600] Memorandum to Docket EPA–HQ–OAR–2022–0985: ''Draft Test Procedures for Determining UBE''. James Sanchez. February 1, 2023.

[601] Note, EPA is not reopening the existing emission-related warranty periods for HD engines and vehicles in parts 1036 and 1037.

battery and fuel-cell stack in durability and performance of BEVs and FCEVs.

As described in the previous section, the National Academies of Science (NAS) in their 2021 report [602] identified battery warranty along with battery durability as an important issue with the rise of electrification. The proposed vehicle warranty requirements for battery and other emission-related electric powertrain components of HD BEVs and FCEVs would be similar to those that EPA has the authority to require and has historically applied to emission control-related components for HD vehicles, including HD ICE vehicles, under EPA's HD vehicle regulations, and would similarly implement and be under the authority of CAA section 207.[603] EPA believes that this practice of ensuring a minimum level of warranty protection should be extended to the high-voltage battery and other emission-related electric powertrain components of HD BEV, PHEV, and FCEV for multiple reasons. Recognizing that BEVs, PHEVs, and FCEVs are playing an increasing role in manufacturers' compliance strategies, the high-voltage battery and the powertrain components that depend on it are emission control devices critical to the operation and emission performance of HD vehicles, as they play a critical role in reducing the vehicles' emissions and allowing BEVs and FCEVs to have zero tailpipe emissions. As explained in Section II and this Section III, EPA also anticipates most if not all manufacturers would include the averaging of credits generated by BEVs and FCEVs as part of their compliance strategies for the proposed standards, thus this is a particular concern given that the calculation of credits for averaging (as well as banking and trading) depend on the battery and emission performance being maintained for the full useful life of the vehicle. Additionally, warranty provisions are a strong complement to the proposed battery durability monitoring requirements. We believe a component under warranty is more likely to be properly maintained and repaired or replaced if it fails, which could help ensure that credits granted for BEV and FCEV production volumes represent real emission reductions achieved over the life of the vehicle. Finally, we expect manufacturers provide warranties at the existing 40 CFR 1037.120 levels for the BEVs they currently produce, and the proposed requirements to certify to offering those warranty periods and document them in the owner's manual would provide additional assurance for owners that all BEVs have the same minimum warranty period.[604]

For heavy-duty vehicles, EPA is proposing that manufacturers identify BEV and FCEV batteries and associated electric powertrain components as component(s) covered under emission-related warranty in the vehicle's application for certification. We propose those components would be covered by the existing regulations' emissions warranty periods [605] of 5 years or 50,000 miles for Light HDV and 5 years or 100,000 miles for Medium HDV and Heavy HDV (see proposed revisions to 40 CFR 1037.120).

We are not proposing new battery warranty requirements for PHEVs as ''hybrid system components'' are covered under the existing regulations in 40 CFR part 1036 and 40 CFR part 1037. In the HD2027 rule, we finalized as proposed that when a manufacturer's certified configuration includes hybrid system components (*e.g.,* batteries, electric motors, and inverters), those components are considered emission-related components, which would be covered under the warranty requirements (see, *e.g.,* 88 FR 4363, January 24, 2023). We are proposing revisions to 40 CFR 1036.120(c) to clarify that the warranty requirements of 40 CFR part 1036 apply to hybrid system components for any hybrid manufacturers certifying to the part 1036 engine standards. In 40 CFR 1037.120(c), we are also proposing a clarifying revision to remove the sentence stating that the emission-related warranty does not need to cover components whose failure would not increase a vehicle's emissions of any regulated pollutant while extending the existing statement that warranty covers other emission-related components in a manufacturer's application for certification to specifically include any other components whose failure would increase a vehicle's CO_2 emissions.

C. Additional Proposed Revisions to the Regulations

In this subsection, we discuss proposed revisions to 40 CFR parts 1036, 1037, 1065.

1. Updates for Cross-Sector Issues

This section includes proposed updates that would make the same or similar changes in related portions of the CFR or across multiple standard-setting parts for individual industry sectors.

i. LLC Cycle Smoothing and Accessory Load

EPA finalized a new LLC duty-cycle in the HD2027 rule that included a procedure for smoothing the nonidle nonmotoring points immediately before and after idle segments within the duty-cycle.[606] It was brought to our attention that the smoothing procedure in 40 CFR 1036.514(c)(3) allows smoothing based on the idle accessory torque but says nothing about how to address the contribution of curb idle transmission torque (CITT), while 40 CFR 1065.610(d)(3)(v) through (viii) requires smoothing based on CITT and says nothing about how to address idle accessory torque. This could create confusion and difficulties for common cases where CITT is required in addition to the 40 CFR 1036.514 idle accessory torques. 40 CFR 1036.514(c)(3), as currently written, would only apply if the transmission was in neutral, because it only allows you to account for the accessory load and not CITT, which was not EPA's intent. To illustrate the concern, for example, a MHD engine could have an LLC idle accessory load of 23.5 foot-pounds, which is 19 percent of a typical automatic transmission CITT of 124 foot-pounds. To resolve this potential issue, we are proposing to remove the smoothing instructions in 40 CFR 1036.514 and incorporate them into 40 CFR 1065.610.

The original intent of the 40 CFR 1065.610 duty-cycle generation procedure was to avoid discontinuities in the reference torque values. It was written with the assumption that idle load in neutral was zero, meaning the vehicle or machine idle accessory load was zero. When we introduced the required LLC idle accessory load in 40 CFR 1036.514, we failed to realize that amendments would be needed to 40 CFR 1065.610(d)(3) to clarify how to handle the accessory load in the denormalization process. The engine mapping section 40 CFR 1065.510 is another area of concern as it does not address the possibility of droop in the idle governor, which would result in different idle speeds when the transmission is in drive versus neutral. This results in an additional

[602] National Academies of Sciences, Engineering, and Medicine 2021. ''Assessment of Technologies for Improving Light-Duty Vehicle Fuel Economy 2025–2035''. Washington, DC: The National Academies Press. *https://doi.org/10.17226/26092.*

[603] See Section I.D. of this preamble for further discussion of EPA's authority under CAA section 207.

[604] The Freightliner eCascadia includes a powertrain warranty of 5 yr/150K or 300K miles (depending on battery pack size). DDCTEC 16046—eCascadia Spec Sheet_6.0.pdf.

[605] EPA promulgated the existing HD vehicle warranty periods in 40 CFR part 1037 under our CAA section 207 authority.

[606] 88 FR 4296 (January 24, 2023).

complication as the required idle accessory torque will be different in drive versus neutral to keep the accessory power at the level specified in Table 1 to 40 CFR 1036.514(c)(4).

40 CFR 1065.610(d)(4) is a related paragraph that allows a different deviation for an optional declared minimum torque that applies to variable- and constant-speed engines and both idle and nonidle nonmotoring points in the cycle. Its scope of application is wider than 40 CFR 1065.610(d)(3). 40 CFR 1065.610(d)(4) applies to all nonidle nonmotoring points in the cycle, not just the ones immediately preceding or following an idle segment and using it instead of (d)(3) would not get the intended constant idle accessory power loads or the intended smoothing.

There is also an existing historical conflict between 40 CFR 1065.510(f)(4) and 1065.610(d)(4). 40 CFR 1065.510(f)(4) requires that manufacturers declare non-zero idle, or minimum torques, but 40 CFR 1065.610(d)(4), permissible deviations, make their use in cycle generation optional. This results in an inconsistency between the two sections as 40 CFR 1065.510(f)(4) requires these parameters to be declared, but 40 CFR 1065.610(d)(4) does not require them to be used.

Additionally, there is a historical conflict in 40 CFR 1065.610(d)(3)(v). This paragraph, as written, includes zero percent speed and, if the paragraph is executed in the order listed, it would include idle points that were changed to neutral in the previous step for neutral while stationary transmissions. This conflict would change the torque values of those idle-in-neutral points back to the warm-idle-in-drive torque and the speed would be left unaltered at the idle-in-neutral speed. This was clearly not the intent of this paragraph, yet we note that this conflict spans back all the way to when these procedures were located in 40 CFR 86.1333–90.

The smoothing of idle points also raises the need for smoothing of the few occurances of non-idle points in the duty-cycles where the vehicle may be moving, the torque converter may not be stalled, and the warm-idle-in-drive torque may not be appropriate. This would result in the smoothing of consecutive points around nonidle nonmotoring points with normalized speed at or below zero percent and reference torque from zero to the warm-idle-in-drive torque value where the reference torque is set to the warm-idle-in-drive torque value.

To address all of these concerns, we are proposing to make changes to 40 CFR 1065.510, 1065.512, and 1065.610. Note, other proposed changes to these subsections not specifically mentioned here are edits to fix citations to relocated or new paragraphs and to improve the clarity of the test procedures. The proposed changes to 40 CFR 1065.610 include basing the smoothing of points preceding an idle segment and following an idle segment on the warm-idle-in-drive torque value (sum of CITT and idle accessory torque). Exceptions to this are for manual transmissions and for the first 24 seconds of initial idle segments for automatic transmissions. Here the warm-idle-in-neutral torque value (idle accessory torque) is used. We are proposing to include manual transmissions in the required deviations for reference torque determination for variable-speed engines in 40 CFR 1065.610(d)(3) for completeness. The proposed amendments to 40 CFR 1065.610(d)(3) include the option to skip these deviations for a manual transmission where optional declared idle torque and the optional declared power are not declared (idle torque is zero). This provides labs that have not yet implemented these required deviations the option to not implement them if they only need to run tests with manual transmissions with zero idle torque. We also proposed the addition of manual transmissions to 40 CFR 1065.512(b)(2) where these required deviations in 40 CFR 1065.610 are cited.

We are also proposing changes to 40 CFR 1065.510(b) and (f) to address the effect of droop in the idle governor and how to determine idle speed when idle torque is a function of idle speed (where a component is specified as power or CITT is specified as a function of speed and the idle speeds need to be determined for each setpoint of the idle governor). We are also proposing the addition of an option to declare the warm idle speed(s) equal to the idle speed setpoint for electronically governed variable-speed engines with an isochronous low-speed governor. Recent updates to the mapping test procedure in 40 CFR 1065.510 regarding running the map at the minimum user-adjustable idle speed setpoint and using the map for any test assumed that one could declare the warm idle speed(s) equal to the idle speed setpoint for electronically governed variable-speed engines.[607] We are proposing changes to make it clear that this option is allowed, which would help simplify the mapping process.

To resolve the conflict between 40 CFR 1065.510(f)(4) and 1065.610(d)(4), we are proposing to move the requirement to declare torques to 40 CFR 1065.510(f)(5), which would make it optional and consistent with 40 CFR 1065.610(d)(4).

To resolve the conflict in 40 CFR 1065.610(c)(3)(v), which we are proposing to reorganize as 40 CFR 1065.610(c)(3)(vii), we are proposing to restrict the applicability of the paragraph from ''all points'' to ''all nonidle nonmotoring points.'' To address the smoothing of consecutive nonidle nonmotoring points that immediately follow and precede any smoothed idle points we are proposing to change their reference torques to the warm-idle-in-drive torque value by adding a new 40 CFR 1065.610(c)(3)(xi).

We are also proposing revisions to 40 CFR 1036.514 to reorganize and clarify the process for cycle denormalization of speed and torque where accessory load is included and to add more specific transmission shift points for greater than 200 seconds idle segments for LLC engine and hybrid powertrain testing. Shifting the transmission to neutral during very long idle segments is more representative of in-use operation than leaving it in drive, so we are proposing more specific shift points instead of a range to reduce lab-to-lab variability. The proposal would require setting the reference speed and torque values to the warm-idle-in-drive values for the first three seconds and the last three seconds of the idle segment for an engine test, requiring keeping the transmission in drive for the first 3 seconds of the idle segment, shifting the transmission from drive to park or neutral immediately after the third second in the idle segment, and shifting the transmission into drive again three seconds before the end of the idle segment.

ii. Calculating Greenhouse Gas Emission Rates

We are proposing to revise 40 CFR 1036.550(b)(2) and 40 CFR 1054.501(b)(7) to clarify that when determining the test fuel's carbon mass fraction, W_C, the fuel properties that must be measured are α (hydrogen) and β (oxygen). These paragraphs, as currently written, imply that you cannot use the default fuel properties in 40 CFR 1065.655 for α, β, γ (sulfur), and δ (nitrogen). The fuel property determination in 40 CFR 1065.655(e) makes it clear that if you measure fuel properties and the default γ and δ values for your fuel type are zero in Table 2 to 40 CFR 1065.655, you do not need to measure those properties. The sulfur (γ) and nitrogen (δ) content of these highly refined gasoline and diesel fuels are not enough to affect the W_C determination

[607] 88 FR 4296 (January 24, 2023).

and the original intent was to not require their measurement. We are proposing this change to ensure there is no confusion on the requirement. We are also proposing to update 40 CFR 1036.550(b)(2) and 40 CFR 1054.501(b)(7) so that they reference 40 CFR 1065.655(e), which includes the default fuel property table whose number had been previously changed and we did not make the corresponding update in 40 CFR 1036.550(b)(2) and 40 CFR 1054.501(b)(7).

iii. ABT Reporting

We are proposing to allow manufacturers to correct previously submitted vehicle and engine GHG ABT reports, where a mathematical or other error in the GEM-based or fleet calculations used for compliance was discovered after the 270-day final report submission deadline. In the Phase 1 program, EPA chose the 270-day deadline for submitting a final GHG ABT report to coincide with existing criteria pollutant report requirements that manufacturers follow for heavy-duty engines.[608] The 270-day deadline was based on our interest in manufacturers maintaining good quality assurance/quality control (QA/QC) processes in generating ABT reports. We continue to believe that aligning the ABT report deadlines for criteria and GHG pollutants can provide consistency within a manufacturer's certification and compliance processes, but further consideration of the inherent differences and complexities in how credits are calculated and accounted for in the two programs led us to consider a time window beyond 270 days for allowing corrections to the GHG report. Certifying an engine or vehicle fleet with attribute-based features (Phase 1) or GEM (Phase 2) involves a greater risk of error compared to EPA's engine or vehicle test-based programs for criteria pollutants, where direct measurement of criteria pollutant emissions at time of certification is well established. Whether an indirect, physics-based model for quantifying GHG emissions such as GEM, or a unique technology-, attribute-, or engine production volume-based credit accounting system, unintentional errors, if not detected prior to submitting the final GHG ABT report and not realized until the accounting process for the following model year was initiated, could negatively affect a manufacturer's credit balance. For example, the loss of these credits could result in a manufacturer purchasing credits or making unplanned investments in additional technologies to make up for the credits lost due to the report error.

Under the proposed revisions to 40 CFR 1036.730(f) and 1037.730(f), EPA would consider requests to correct previously submitted MY 2021 or later ABT reports only when notified of the error within a time period of 24 months from the September 30 final report deadline. For requests to correct reports for MY 2020 or earlier, we are proposing an interim deadline of October 1, 2024 (see proposed new 40 CFR 1036.150(aa) and 1037.150(y)). We believe that corrections to ABT reports, where justified, will have no impact on emissions compliance as the actual performance of a manufacturer's fleet was better than what was reported in error, and correcting the report simply adjusts the credit balance for the model year in question to the appropriate value, such that those credits can then be used in future model years.

This proposed narrowly focused allowance for correcting accounting, typographical, or GEM-based errors after a manufacturer submits the 270-day final report (see proposed revisions in 40 CFR 1037.730) is intended to address the disproportionate financial impact of an unintentional error in the complex modeling and accounting processes that manufacturers use to determine compliance and credit balances for a given model year. We are proposing a 10 percent discount to these credit corrections to the final report, which will reduce the value of the credits that are restored upon approval of the request. The 10 percent discount is intended to balance the goal of encouraging accuracy in ABT reports and use of robust QA/QC processes against the considerations for allowing manufacturers the ability to correct unforeseen errors.

iv. Migration of 40 CFR 1037.550 to 40 CFR 1036.545

We are proposing to migrate the powertrain test procedure in 40 CFR 1037.550 to 40 CFR 1036.545. Over the course of the development of this test procedure, its use expanded to include certification of engines to the criteria pollutant standards in 40 CFR part 1036 (including test procedures in 40 CFR 1036.510, 1036.512, and 1036.514) and the procedure can be used in place of the engine GHG testing procedures (40 CFR 1036.535 and 1036.540) for hybrid engines and hybrid powertrains. We are proposing to migrate the test procedure to 40 CFR 1036.545 as-is, with the following exceptions. We are proposing to add a new figure that provides an overview of the steps involved in carrying out testing under this section. We are proposing to clarify that if the test setup has multiple locations where torque is measured and speed is controlled, the manufacturer would be required to sum the measured torque and validate that the speed control meets the requirements defined in the proposed 40 CFR 1036.545(m). Positive cycle work, $W_{[cycle]}$, would then be determined by integrating the sum of the power measured at each location in the proposed 40 CFR 1036.545(o)(7). We are also proposing to clarify that manufacturers may test the powertrain with a chassis dynamometer as long as they measure speed and torque at the powertrain's output shaft or wheel hubs. We are also proposing to replace all references to 40 CFR 1037.550 throughout 40 CFR part 1036 and part 1037 with new references to 40 CFR 1036.545. For test setups where speed and torque are measured at multiple locations, determine W[cycle] by integrating the sum of the power measured at each location.

v. Median Calculation for Test Fuel Properties in 40 CFR 1036.550

40 CFR 1036.550 currently requires the use of the median value of measurements from multiple labs for the emission test fuel's carbon-mass-specific net energy content and carbon mass fraction for manufacturers to determine the corrected CO_2 emission rate using equation 40 CFR 1036.550–1. The current procedure does not provide a method for determining the median value. We are proposing to add a new calculation for the median value in the statistics calculation procedures of 40 CFR 1065.602 as a new paragraph (m). We also propose to reference the new paragraph (m) in 40 CFR 1036.550(a)(1)(i) and (a)(2)(i) for carbon-mass-specific net energy content and carbon mass fraction, respectively. This proposed new calculation procedure would ensure that labs are using the same method to calculate the median value. This proposed calculation is a standard statistical method for determining median and it would require order ranking the data in increasing order from smallest value to largest.

Determining the median from data sets containing an even number of data points would require dividing the number of data points by two to determine the rank of one of the data points whose value would be used to determine the median. This data point would then be added to the next highest ranked data point and the sum would be divided by two to determine the median.

[608] See the HD GHG Phase 1 rule (76 FR 57284, September 15, 2011).

Determining the median from data sets containing an odd number of data points would be determined by adding one to the number of data points and dividing the sum by two to determine the rank of the data point whose value would be the median.

2. Updates to 40 CFR Part 1036 Heavy-Duty Highway Engine Provisions

i. Manufacturer Run Heavy Duty In-Use Testing

We are proposing a clarification to 40 CFR 1036.405(d) regarding the starting point for the 18-month window manufacturers have to complete an in-use test order. Under the current provision, the clock for the 18-month window starts after EPA has received the manufacturer's proposed plan for recruiting, screening, and selecting vehicles. There is concern that manufacturers could delay testing by unnecessarily prolonging the selection process. To alleviate this concern and keep the testing timeline within the originally intended 18-month window, we are proposing to start the clock on the 18-month window when EPA issues the order for the manufacturer to test a particular engine family.

In the HD2027 final rule, we adopted a new 40 CFR 1036.420 that includes the pass criteria for individual engines tested under the manufacturer run in-use testing program. Table 1 to 40 CFR 1036.420 contains the accuracy margins for each criteria pollutant. We are proposing to correct an inadvertent error in the final rule's amendatory text for the regulations that effects the accuracy margin for carbon monoxide (CO), which is listed in Table 1 as 0.025 g/hp-hr. The HD2027 preamble is clear that the CO accuracy margin that we finalized was intended to be 0.25 g/hp-hr and we are proposing to correct Table 1 to reflect the value in the preamble.[609]

ii. Low Load Cycle (LLC)—Cycle Statistics

We are proposing to update 40 CFR 1036.514 to address the ability of gaseous fueled non-hybrid engines with single point fuel injection to pass cycle statistics to validate the LLC duty cycle. We referenced, in error in 40 CFR 1036.514(e), the alternate cycle statistics for gaseous fueled engines with single point fuel injection in the cycle average fuel map section in 40 CFR 1036.540(d)(3) instead of adding LLC specific cycle statistics in 40 CFR 1036.514(e). We are proposing the addition of a new Table 1 in 40 CFR 1036.514(b) to provide cycle statistics that are identical to those used by the California Air Resources Board for the LLC and to remove the reference to 40 CFR 1036.540(d)(3) in 40 CFR 1036.514(e).

iii. Low Load Cycle (LLC)—Background Sampling

We are proposing to remove the provision in 40 CFR 1036.514(d) that allows periodic background sampling into the bag over the course of multiple test intervals during the LLC because the allowance to do this is convered in 40 CFR 1065.140(b)(2). The LLC consists of a very long test interval and the intent of the provision was to address emission bag sampling systems that do not have enough dynamic range to sample background constantly over the entire duration of the LLC. 40 CFR 1065.140(b)(2) affords many flexibilities regarding the measurement of background concentrations, including sampling over multiple test intervals as long as it does not affect your ability to demonstrate compliance with the applicable emission standards.

iv. U.S.-Directed Production Volume

In the recent HD2027 rule, we amended the heavy-duty highway engine provision in 40 CFR 1036.205 and several other sections to replace ''U.S.-directed production volume'' with the more general term ''nationwide'' where we intended manufacturers report total nationwide production volumes, including production volumes that meet different state standards.

In this rule, for the reasons explained in Section III.A.1, we are proposing a broader change to the definition of ''U.S.-directed production volume'' for vehicles in 40 CFR 1037.801 to include production volumes for vehicles certified to different standards. We are proposing to adopt the same updated definition of ''U.S.-directed production volume'' in 40 CFR 1036.801 to maintain consistency between the engine and vehicle regulations' definitions, and are proposing to reinstate the term ''U.S.-directed production volume'' where we currently use ''nationwide'' in 40 CFR part 1036 to avoid having two terms with the same meaning.[610]

Since certain existing part 1036 requirements use the existing term and definition to exclude production volumes certified to different state standards (*i.e.,* the NO_X ABT program for HD engines), we are proposing corresponding clarifying updates throughout 40 CFR part 1036 to ensure no change to those existing exclusions in tandem with the proposed change to the definition of the term ''U.S.-directed production volume.'' For example, we are also proposing to update 40 CFR 1036.705(c) to establish this paragraph as the reference for specifying the engines that are excluded from the production volume used to calculate emission credits for HD highway engines, and we propose that a new 40 CFR 1036.705(c)(4) be the location where we exclude engines certified to different state emission standards for the HD engine program.[611] The proposed changes also include replacing several instances of ''U.S.-directed production volume'' with a more general ''production volume'' where the text clearly is connected to ABT or a more specific reference to the production volume specified in 40 CFR 1036.705(c).[612]

v. Correction to NO_X ABT FEL Cap

We are proposing to amend 40 CFR 1036.104(c)(2) to remove paragraph (iii) which corresponds to a FEL cap of 70 mg/hp-hr for MY 2031 and later Heavy HDE that we proposed in HD2027 but did not intend to include in the final amendatory text. In the final rule for the HD2027 rule, we did not intend to include in the final amendatory text paragraph (iii) alongside the final FEL cap of 50 mg/hp-hr for MY 2031 and later which applies to all HD engine service classes including Heavy HDE in paragraph (ii) described by EPA in the preamble and supporting rule record. We are proposing to correct this error and remove paragraph (iii). This correction will not impact the stringency of the final NO_X standards because even without correction paragraph (ii) controls.[613]

vi. Rated Power and Continuous Rated Power Coefficient of Variance in 40 CFR 1036.520

We are proposing to correct an error and include a revision to a provision we intended to include in HD2027, regarding determining power and vehicle speed values for powertrain

[609] See HD2027 final rule preamble (88 FR 4353, January 24, 2023) (''PEMS measurement allowance values in 40 CFR 86.1912 are 0.01 g/hp-hr for HC, 0.25 g/hp-hr for CO, 0.15 g/hp-hr for NO_X, and 0.006 g/hp-hr for PM. We are maintaining the same values for HC, CO, and PM in this rulemaking.'').

[610] See proposed revisions in 40 CFR 1036.205(v), 1036.250(a), 1036.405(a), 1036.605(e), 1036.725(b), and 1036.730(b).

[611] The proposed revision would also move the statement to keep records relating to those production volumes from its current location in 40 CFR 1036.705(c) to 40 CFR 1036.735 with the other ABT recordkeeping requirements.

[612] See proposed revisions in 40 CFR 1036.150(d) and (k), 1036.725(b), and 1036.730(b).

[613] EPA is not reopening the final HD2027 standards or any other portion of that rule besides those specifically identified in this document as subject to new proposed revisions.

testing. In 40 CFR 1036.520, paragraphs (h) and (i) describe how to determine rated power and continuous rated power, respectively, from the 5 Hz data in paragraph (g) averaged from the 100 Hz data collected during the test. We inadvertently left out the coefficient of variance (COV) limits of 2 percent that are needed for making the rated and continuous rated power determinations in the HD2027 final 40 CFR 1036.520(h) and (i), which were intended to be based on the COVs calculated in 40 CFR 1036.520(g) and we correctly included in the HD2027 final 40 CFR 1036.520(g). We are proposing to add the 2 percent COV limit into 40 CFR 1036.520(h) and (i). We are also proposing to correct a paragraph reference error in 40 CFR 1036.520(h). The paragraph references the data collected in paragraph (f)(2) of the section. The data collection takes place in paragraph (d)(2) of the section.

vii. Selection of Drive Axle Ratio and Tire Radius for Hybrid Engine and Hybrid Powertrain Testing

We are proposing to combine and modify the drive axle ratio and tire radius selection paragraphs in 40 CFR 1036.510(b)(2)(vii) and (viii). When testing hybrid engines and hybrid powertrains a series of vehicle parameters must be selected. The paragraphs for selecting drive axle ratio and tire radius are separate from each other, however the selection of the drive axle ratio must be done in conjunction with the tire radius as not all tire sizes are offered with a given drive axle ratio. We are proposing to combine these paragraphs into one to eliminate any possible confusion on the selection of these two parameters.

The maximum vehicle speed for SET testing of hybrid engines and powertrains is determined based on the vehicle parameters and maximum achievable speed for the configuration in 40 CFR 1036.510. This is not the case for the FTP vehicle speed which reaches a maximum of 60 miles per hour. It has been brought to our attention that there are some vehicle configurations that cannot achieve the FTP maximum speed of 60 mile per hour. To resolve this, we are proposing changes to 40 CFR 1036.510(b)(2)(vii) instructing the manufacturer to select a representative combination of drive axle ratio and tire size that ensure a vehicle speed of no less than 60 miles per hour. We are also proposing to include, as a reminder, that manufacturers may request approval for selected drive axle ratio and tire radius consistent with the provisions of 40 CFR 1036.210. We are also proposing to add a provision for manufacturers to follow the provisions of 40 CFR 1066.425(b)(5) if the hybrid powertrain or hybrid engine is used exclusively in vehicles which are not capable of reaching 60 mi/hr. This would allow the manufacturer to seek approval of an alternate test cycle and cycle-validation criteria for powertrains where the representative tire radius and axle ratio do not allow the vehicle to achieve the maximum speeds of the specified test cycle.

viii. Determining Power and Vehicle Speed Values for Powertrain Testing

We are proposing to revise 40 CFR 1036.520(d)(2) to address the possibility of clutch slip when performing the full load acceleration with maximum driver demand at 6.0 percent road grade where the initial vehicle speed is 0 mi/hr. The proposed revision would allow hybrid engines and hybrid powertrains to modify the road grade in the first 30 seconds or increase the initial speed from 0 miles per hour to 5 miles per hour to mitigate clutch slip. This road grade alteration or change in initial speed should reduce the extreme force on the clutch when accelerating at 6.0 percent grade.

We are proposing to revise 40 CFR 1036.520(d)(3) to address situations where the powertrain does not reach maximum power in the highest gear 30 seconds after the grade setpoint has reached 0.0 percent. To address this we are proposing to replace the 30 second time limit with a speed change stability limit of 0.02 m/s^2 which would trigger the end of the test.

ix. Request for Comment on Determining Vehicle Mass in 40 CFR 1036.510

As engines and powertrains evolve with time, changes to vehicle mass may be needed to maintain equivalent cycle work between the powertrain and engine test procedures. We request comment on updating equation 40 CFR 1036.510–1 to better reflect the relationship of vehicle mass and rated power. With the increase in rated power of heavy-duty engines, at least one manufacturer has raised to EPA that there is some concern that equation 40 CFR 1036.510–1 might need updating to better reflect the relationship of vehicle mass and rated power. If you provide comment that the equation should be updated, we request that you provide data to justify the change and show that the change would provide comparable values of cycle work and power versus time, for both the engine and powertrain versions of the duty cycles. For the engine duty cycles (*e.g.,* FTP and SET), the cycle work of the duty cycle is a function of the engine torque curve. For the powertrain duty cycles (*e.g.,* vehicle FTP and vehicle SET), the cycle work of the duty cycle is a function of the rated power of the powertrain.

x. Test Procedure for Engines Recovering Kinetic Energy for Electric Heaters

We are proposing a clarification in the existing definition for hybrid in 40 CFR 1036.801 to add a sentence stating that systems recovering kinetic energy to power an electric heater for the aftertreatment would not qualify as a hybrid engine or hybrid powertrain. Under the existing hybrid definition, systems that recover kinetic energy, such as regenerative braking, would be considered ''hybrid components'' and manufacturers would be required to use the powertrain test procedures to account for the electric heater or use the engine test procedures and forfeit the emission reductions from heating the aftertreatment system. With the proposed clarification to the hybrid definition, engines that use regenerative braking only to power an electric heater for aftertreatment devices would not be considered hybrid engines and, therefore, would not be required to use the powertrain test procedures; instead, those engines could use the test procedures for engines without hybrid components.

We are proposing to supplement the new definitions with direction for testing these systems in 40 CFR 1036.501. In a proposed new 40 CFR 1036.501(g), we would clarify that an electric heater for aftertreatment can be installed and functioning when creating fuel maps using 40 CFR 1036.505(b), and measuring emissions over the duty cycles specified in 40 CFR 1036.510(b), 40 CFR 1036.512(b), and 40 CFR 1036.514(b). This proposed allowance would be limited to hybrid engines where the system recovers less than 10 percent of the total positive work over each applicable transient cycle and the recovered energy is exclusively used to power an electric heater in the aftertreatment. Since the small amount of recovered energy is stored thermally and can't be used to move the vehicle, we believe that the engine test procedures are just as representative of real-world operation as the powertrain test procedures. We request comment on using a different limit than 10 percent of the total positive work over the transient cycle for this flexibility. The proposed limit of 10 percent is based on the amount of negative work versus positive work typical of conventional engines over the transient cycle. After evaluating a range of HDE, we have observed that the negative work from

the transient FTP cycle during engine motoring is less than 10 percent of the positive work of the transient FTP cycle.[614] In the same paragraph (g), we also propose that manufacturers have the option to use the powertrain test procedures for these systems, which would not have the same restrictions we are proposing for the amount of recovered energy.

xi. Updates to 40 CFR Part 1036 Definitions

We propose new and updated definitions in 40 CFR 1036.801 in support of several proposed requirements in Section II or this Section III. We propose to add a reference to two new definitions proposed in 40 CFR part 1065: Carbon-containing fuel and ''neat''. The proposed definition of carbon-containing fuel will help identify the applicable test procedures for engines using fuels that do not contain carbon and would not produce CO_2. The proposed definition of ''neat'' would indicate that a fuel is not mixed or diluted with other fuels, which would help distinguish between fuels that contain no carbon, such as hydrogen, and fuels that that contain carbon through mixing, such as hydrogen where a diesel pilot is used for combustion. We also propose to update the definition for U.S.-directed production volume to be equivalent to nationwide production.

We propose to consolidate the definitions of hybrid, hybrid engine, and hybrid powertrain into a single definition of ''hybrid'' with subparagraphs distinguishing hybrid engines and powertrains. The proposed definition of hybrid retains most of the existing definition, except that we propose to remove the unnecessary ''electrical'' qualifier from batteries and propose to add a statement relating to recovering energy to power an electric heater in the aftertreatment (see Section III.C.2.x). The revised definitions for hybrid engines and powertrains, which are proposed as subparagraphs under ''hybrid'', are more complementary of each other with less redundancy. As noted in Section III.C.2.x, we propose to update the definitions of hybrid engine and hybrid powertrain to exclude systems recovering kinetic energy for electric heaters.

We propose several editorial revisions to definitions as well. We propose to update the definition of mild hybrid such that it is *relating* to a hybrid engine or hybrid powertrain. We propose to revise the existing definition of small manufacturer to clarify that the employee and revenue limits include the totals from *all* affiliated companies and added a reference to the definition of affiliated companies in 40 CFR 1068.30.

xii. Miscellaneous Corrections and Clarifications in 40 CFR Part 1036

We are proposing to update 40 CFR 1036.150(j) to clarify that the alternate standards apply for model year 2023 and earlier loose engines, which is consistent with existing 40 CFR 86.1819–14(k)(8).

We propose to update the provision describing how to determine deterioration factors for exhaust emission standards in 40 CFR 1036.245 so it would also apply for hybrid powertrains.

xiii. Off-Cycle Test Procedure for Engines That Use Fuels Other Than Carbon-Containing Fuel

We are proposing a new paragraph 40 CFR 1036.530(j) for engines that use fuels other than carbon-containing fuel. The off-cycle test procedures in 40 CFR 1036.530 use CO_2 as a surrogate for engine power. This approach works for engines that are fueled with carbon-containing fuel, since power correlates to fuel mass rate and for carbon-containing fuels, fuel mass rate is proportional to the CO_2 mass rate of the exhaust. For fuels other than carbon-containing fuels, the fuel mass rate is not proportional to the CO_2 mass rate of the exhaust. To address this issue, we are proposing, for fuels other than carbon-containing fuels, to use engine power directly instead of relying on CO_2 mass rate to determine engine power. For field testing where engine torque and speed is not directly measured, engine broadcasted speed and torque can be used as described in 40 CFR 1065.915(d)(5).

xiv. Onboard Diagnostic and Inducement Amendments

EPA is proposing to make changes to specific aspects of paragraphs within 40 CFR 1036.110 and 1036.111 to add clarifications and correct minor errors in the OBD and inducement provisions adopted in the HD2027 final rule.[615] Specifically, EPA is proposing the following:

- *40 CFR 1036.110(b)(6):* Proposing to correct a reference to the CARB regulation to be consistent with our intent as described in the preamble of the final rule (see 88 FR 4372) to not require manufacturer self-testing and reporting requirements in 13 CCR 1971.1(l)(4).
- *40 CFR 1036.110(b)(9):* Proposing to clarify that the list of data parameters readable by a generic scan tool is limited to components that are subject to existing OBD monitoring requirements (*e.g.,* through comprehensive component requirements in 13 CCR 1971.1(g)(3)). For example, if parking brake status was not included in an engine's OBD certificate, it would not be a required data parameter.
- *40 CFR 1036.110(b)(11):* Proposing to add a reference to 13 CCR 1971.5. The final rule referenced 13 CCR 1971.1 to point to OBD testing deadlines; however, there are additional OBD testing deadlines specified in 1971.5.
- *40 CFR 1036.110(c)(1) and 40 CFR 1036.125(h)(8)(iii):* Proposing to correct terminology within these provisions by referring to inducements related to ''DEF level'' instead of ''DEF quantity,'' to make the intent clearer that the system must use the level of DEF in the DEF tank for purposes of evaluating the specified inducement triggering condition. We separately refer to the quantity of DEF injection for managing the functioning of the SCR catalyst, which is unrelated to the level of DEF in the DEF tank.
- *40 CFR 1036.111:* Proposing to edit for clarity, to eliminate confusion with onboard diagnostic terminology. More specifically, proposing edits to adjust inducement-related terminology to refer to ''inducement triggering conditions'' instead of ''fault conditions.'' Inducement algorithms are executed through OBD algorithms, but the inducement triggers are separate from OBD fault conditions related to the malfunction indicator light.
- *40 CFR 1036.111(a)(2):* Proposing to clarify how to determine the speed category when there is less than 30 hours of accumulated data. The regulation as adopted sets the inducement schedule based on average vehicle speed over the preceding 30 hours of non-idle operation. That instruction will cover most circumstances; however, there is no specific instruction for an inducement triggering condition that occurs before the vehicle accumulates 30 hours of non-idle operation. As described in the final rule, we depend on 30 hours of non-idle operation to establish which inducement schedule is appropriate for a vehicle. We are also aware that a newly purchased vehicle would have

[614] Memorandum to Docket EPA–HQ–OAR–2022–0985: ''Analysis of Motoring and Positive Cycle Work for Current Heavy-Duty Engines''. James Sanchez. April 4, 2023.

[615] EPA is not reopening any aspect of our OBD and inducement provisions other than those proposed clarifications and corrections specifically identified in this section.

accumulated several hours of very low-speed operation before being placed into service. We are therefore proposing to specify that engines should not be designed to assess the speed category for inducement triggering conditions until the vehicle has accumulated 30 hours of non-idle operation. We are proposing that manufacturers should program engines with a setting categorizing them as high-speed vehicles until they accumulate 30 hours of data to avoid applying an inappropriate speed schedule.

• *40 CFR 1036.111(d)(1), Table 2:* Proposing to correct a typographical error for the middle set of columns that should read ''Medium-speed'' instead of repeating ''Low-speed.'' The table was correctly published in the preamble to the final rule (see 88 FR 4378). We are proposing to add an inadvertently omitted notation in the table to identify the placement of a footnote to the table.

xv. Engine Data and Information To Support Vehicle Certification

We are proposing to update 40 CFR 1036.505 to clarify that when certifying vehicles with GEM, for any fuel type not identified in Table 1 of 40 CFR 1036.550, the manufacturer would identify the fuel type as diesel fuel for engines subject to compression-ignition standards, and would identify the fuel type as gasoline for engines subject to spark-ignition standards. This proposed change to 40 CFR 1036.505, is intended to clarify what was originally intended for fuels that are not specified in Table 1 of 40 CFR 1036.550. This proposed clarification would address the potential situation where, if a fuel is input into GEM other than the fuel types identified in Table 1 of 40 CFR 1036.550, GEM will output an error.

3. Updates to 40 CFR Part 1037 Heavy-Duty Motor Vehicle Provisions

i. Standards for Qualifying Small Businesses

As noted in Section II.I, we are proposing that qualifying small manufacturers would continue to be subject to the existing MY 2027 and later standards. We are proposing to revise 40 CFR 1037.150(c) to specify the standards that apply for qualifying small business vehicle manufacturers in light of this proposal to adopt new standards for those model years. Specifically, we are renumbering the current paragraphs to apply through MY 2026 and adding new paragraphs that would apply for MY 2027 and later, including three tables that show the small business CO_2 emission standards for vocational vehicles, custom chassis vocational vehicles, and tractors. The proposed updates also include the proposed limitations on generating credits for averaging only (no banking, trading, or use of credit multipliers) unless the small manufacturer certifies to the Phase 3 standards.

ii. Vehicles With Engines Using Fuels Other Than Carbon-Containing Fuels

In the HD2027 final rule, we adopted revisions to 40 CFR 1037.150(f) to include fuel cell electric vehicles, in addition to battery electric vehicles, in the provision that deems tailpipe emissions of regulated GHG pollutants as zero and does not require CO_2-related emission testing. As discussed in Section II.D.1, hydrogen-fueled internal combustion engines are a newer technology under development and since hydrogen has no carbon, H2 ICEs fueled with neat hydrogen would produce zero HC, CO, and CO_2 engine-out emissions. Therefore, we are proposing to include vehicles using engines fueled with neat hydrogen in 40 CFR 1037.150(f) so that their CO_2 tailpipe emissions are deemed to be zero and manufacturers are not required to perform any engine testing for CO_2 emissions. This proposed revision would not change the requirements for H2 ICE engines, including those fueled with neat hydrogen, to meet the N_2O GHG standards or the criteria pollutant emission standards in 40 CFR part 1036. We request comment on this proposed revision to include H2 ICE in 40 CFR 1037.150(f).

Additionally, we are proposing to revise 40 CFR 1037.150(f) to replace ''electric vehicles'' with ''battery electric vehicles'', and ''hydrogen fuel cell vehicles'' with ''fuel cell electric vehicles'', consistent with proposed revisions to those definitions (see Section III.C.3.xiii).

iii. ABT Calculations

We are proposing clarifying revisions to the definitions of two variables of the emission credit calculation for ABT in 40 CFR 1037.705. As noted in Section II.C, we propose to update the emission standard variable (variable ''Std'') to establish a common reference emission standard when calculating ABT emission credits for vocational vehicles with tailpipe CO_2 emissions deemed to be zero (*i.e.,* BEVs, FCEVs, and vehicles with engines fueled with pure hydrogen), which would be the CI Multi-Purpose vehicle regulatory subcategory standard for the applicable weight class. We also propose to revise the ''Volume'' variable to replace the term ''U.S.-directed production volume'' with a reference to the paragraph (c) where we are also proposing updates consistent with the proposed revision to the definition of U.S.-directed production volume. With the proposed revision to paragraph (c), we intend for 40 CFR 1037.705(c) to replace ''U.S.-directed production volume'' as the primary reference for the appropriate production volume to apply with respect to the ABT program and propose to generally replace throughout part 1037.

iv. U.S.-Directed Production Volume

The CAA requires that every HD engine and vehicle be covered by a certificate of conformity indicating compliance with the applicable EPA regulations.[616] In the existing 40 CFR 1037.205, which describes requirements for the application for certification, we currently use the term U.S.-directed production volume and are now proposing that manufacturers should, instead, be reporting total nationwide production volumes that include any production volumes certified to different state standards.

In the recent HD2027 rule, we amended the corresponding heavy-duty highway engine provision in 40 CFR 1036.205 to replace ''U.S.-directed production volume'' with the more general term ''nationwide'', noting that manufacturers were already reporting the intended total nationwide production, including production that meets different state standards. In this rule, for the reasons explained in Section III.A.1, we are proposing a broader change to the definition of ''U.S.-directed production volume'' and the proposed new definition would not require us to change the term used in 1037.205 to ensure manufacturers report nationwide production volumes.[617] We are proposing revisions to the introductory paragraph of 40 CFR 1037.705(c), consistent with the proposed revisions to the corresponding HD engine provisions, to establish this paragraph as the reference for which engines are excluded from the production volume used to calculate emission credits for HD highway (see Section III.C.2.iv). Similarly, the proposed changes include replacing several instances of ''U.S.-directed production volume'' with a more general ''production volume'' where the

[616] CAA sections 203 and 206, 42 U.S.C. 7522 and 7525.

[617] As noted in Section III.C.2.iv, we are proposing to adopt the same updated definition of ''U.S.-directed production volume'' in 40 CFR 1036.801, with additional corresponding proposed updates to not revise existing exclusions of production volumes certified to different standards (*i.e.,* the NO_X ABT program for HD engines).

text clearly is connected to ABT or a more specific reference to the production volume specified in 40 CFR 1037.705(c).[618]

v. Revisions to Hybrid Powertrain Testing and Axle Efficiency Testing

We are proposing to add a new figure to 40 CFR 1037.550 to give an overview on how to carry out hybrid powertrain testing in that section. We are proposing in the axle efficiency test in 40 CFR 1037.560(e)(2) to allow the use of an alternate lower gear oil temperature range on a test point by test point basis in addition to the current alternate that requires the use of the same lower temperature range for all test points within the test matrix. This would provide more representative test results as not all test points within a matrix for a given axle test will result in gear oil temperatures within the same range.

vi. Removal of Trailer Provisions

As part of the HD GHG Phase 2 rulemaking, we set standards for certain types of trailers used in combination with tractors (see 81 FR 73639, October 25, 2016). We are proposing to remove the regulatory provisions related to trailers in 40 CFR part 1037 to carry out a decision by the U.S. Court of Appeals for the D.C. Circuit, which vacated the portions of the HD GHG Phase 2 final rule that apply to trailers.[619] The proposed revisions include removal of specific sections and paragraphs describing trailer provisions and related references throughout the part. Additionally, we are proposing new regulatory text for an existing test procedure that currently refers to a trailer test procedure. The existing 40 CFR 1037.527 describes a procedure for manufacturers to measure aerodynamic performance of their vocational vehicles by referring to the A to B testing methodology for trailers in 40 CFR 1037.525. We are proposing to copy the regulatory text describing A to B testing from the trailer procedure into 40 CFR 1037.527 (such that it replaces the cross-referencing regulatory text).

vii. Removal of 40 CFR 1037.205(q)

We are proposing to correct an inadvertent error and remove the existing 40 CFR 1037.205(q). This paragraph contains requirements we proposed in HD2027 but did not finalize and thus did not intend to include in the final rule's amendatory instructions, regarding information for battery electric vehicles and fuel cell electric vehicles to show they meet the standards of 40 CFR part 1037.

viii. Adding Full Cylinder Deactivation to 40 CFR 1037.520(j)(1)

We are proposing to credit vehicles with engines that include full cylinder deactivation during coasting at 1.5 percent. We believe this is appropriate since the same 1.5 percent credit is currently provided for tractors and vocational vehicles with neutral coasting, and both technologies reduce CO_2 emissions by reducing the engine braking during vehicle coasting.[620] Cylinder deactivation can reduce engine braking by closing both the intake and exhaust valves when there is no operator demand to reduce the pumping losses of the engine when motoring. Because of this, only vehicles with engines where both exhaust and intake valves are closed when the vehicle is coasting would qualify for the 1.5 percent credit.

ix. Removal of Chassis Testing Option Under 40 CFR 1037.510 and Reference Update

We are proposing to remove the chassis dynamometer testing option for testing over the duty cycles as described in 40 CFR 1037.510(a). The chassis dynamometer testing was available as an option for Phase 1 testing in 40 CFR 1037.615. We are proposing to remove it to avoid confusion as the chassis dynamometer testing option is only allowed when performing off-cycle testing following 40 CFR 1037.610 and is not allowed for creating the cycle average fuel map for input into GEM. Note that manufacturers may continue to test vehicles on a chassis dynamometer to quantify off-cycle credits under 40 CFR 1037.610.

We are also proposing to correct paragraph reference errors in 40 CFR 1037.510(a)(2)(iii) and (iv). These paragraphs reference the warmup procedure in 40 CFR 1036.520(c)(1). The warmup procedure is actually located in 40 CFR 1036.520(d).

x. Utility Factor Clarification for Testing Engines With a Hybrid Power Takeoff Shaft

We are proposing to clarify the variable description for the utility factor fraction UF_{RCD} in 40 CFR 1037.540(f)(3)(ii). The current description references the use of an ''approved utility factor curve''. The original intent was to use the power take off utility factors that reside in Appendix E to 40 CFR part 1036 to generate a utility factor curve to determine UF_{RCD}. We are proposing to clarify this by replacing ''approved utility factor curve'' with a reference to the utility factors in Appendix E.

xi. Heavy-Duty Vehicles at or Below 14,000 Pounds GVWR

The standards proposed in this rule would apply for all heavy-duty vehicles above 14,000 pounds GVWR, except as noted in existing 40 CFR 1037.150(l). We are not proposing changes to the option for manufacturers to voluntarily certify incomplete vehicles at or below 14,000 pounds GVWR to 40 CFR part 1037 instead of certifying under 40 CFR part 86, subpart S; the proposed standards in this rule would also apply for those incomplete heavy-duty vehicles. We propose to remove 40 CFR 1037.104, which currently states that HD vehicles subject to 40 CR part 86, subpart S, are not subject to the 40 CFR 1037 standards; instead, we propose that manufacturers refer to 40 CFR 1037.5 for excluded vehicles.[621]

In a parallel rulemaking to set new emission standards for light-duty and medium-duty vehicles under 40 CFR part 86, subpart S, we intend to propose a requirement for those vehicles at or below 14,000 pounds GVWR with a high tow rating to have installed engines that have been certified to the engine-based criteria emission standards in 40 CFR part 1036. This would apply for both complete vehicles and incomplete vehicles with Gross Combined Weight Rating above 22,000 pounds. Some of those vehicles would continue to meet GHG standards under 40 CFR 86.1819 instead of meeting the engine-based GHG standards in 40 CFR part 1036 and the vehicle-based GHG standards in 40 CFR part 1037. In particular, under the parallel proposed rule, manufacturers of incomplete vehicles at or below 14,000 pounds GVWR with a high tow rating would continue to have the option of either meeting the greenhouse gas standards under 40 CFR parts 1036 and 1037, or instead meeting the greenhouse gas standards with chassis-based measurement procedures under 40 CFR part 86, subpart S.

xii. Updates to Optional Standards for Tractors at or Above 120,000 Pounds

In HD GHG Phase 2 and in a subsequent rulemaking, we adopted optional heavy Class 8 tractor CO_2 emission standards for tractors with a GCWR above 120,000 pounds (see 40

[618] See proposed revisions in 40 CFR 1037.150(c) and 1037.730(b).

[619] *Truck Trailer Manufacturers Association* v. *EPA,* 17 F.4th 1198 (D.C. Cir. 2021).

[620] See the HD GHG Phase 2 rule (81 FR 73598, October 25, 2016), for more information on how 1.5 percent was determined for neutral coasting.

[621] This proposed change includes removing the reference to 40 CFR 1037.104 in 40 CFR1037.1.

CFR 1037.670).[622] We did this because most manufacturers tend to rely on U.S. certificates as their evidence of conformity for products sold into Canada to reduce compliance burden. Therefore, in Phase 2 we adopted provisions that allow the manufacturers the option to meet standards that reflect the appropriate technology improvements, along with the powertrain requirements that go along with higher GCWR. While these heavy Class 8 tractor standards are optional for tractors sold into the U.S. market, Canada adopted these as mandatory requirements as part of their regulatory development and consultation process. We propose to sunset the optional standards after MY 2026.[623]

xiii. Updates to 40 CFR Part 1037 Definitions

We are proposing several updates to the definitions in 40 CFR 1037.801. As noted in Section III.C.3.vi, we are proposing to remove the trailer provisions, which include removing the following definitions: Box van, container chassis, flatbed trailer, standard tractor, and tank trailer. We also propose to revise several definitions to remove references to trailers or trailer-specific sections, including definitions for: Class, heavy-duty vehicle, low rolling resistance tire, manufacturer, model year, Phase 1, Phase 2, preliminary approval, small manufacturer, standard payload, tire rolling resistance, trailer, and vehicle.

We also propose new and updated definitions in support of several proposed requirements in Section II or this Section III. We propose to replace the existing definition of ''electric vehicle'' with more specific definitions for the different vehicle technologies and energy sources that could be used to power these vehicles. Specifically, we propose new definitions for battery electric vehicle, fuel cell electric vehicle, and plug-in hybrid electric vehicle. We also propose to replace the existing definition of ''hybrid engine or hybrid powertrain'' with a definition of ''hybrid'' that refers to a revised definition in 40 CFR part 1036.[624] We also propose to update U.S.-directed production volume to be equivalent to nationwide production.

We propose several editorial revisions to definitions as well. We propose to revise the definition of vehicle to remove the text of existing paragraph (2)(iii) and move the main phrase of that removed paragraph (*i.e.,* ''when it is first sold as a vehicle'') to the description of ''complete vehicle'' to further clarify that aspect of the existing definition. We propose to revise the existing definition of small manufacturer, in addition to the proposed revisions removing reference to trailers, to clarify that the employee and revenue limits include the totals from *all* affiliated companies and added a reference to the definition of affiliated companies in 40 CFR 1068.30.

xiv. Miscellaneous Corrections and Clarifications in 40 CFR Part 1037

We are proposing to revise several references to 40 CFR part 86 revisions. Throughout 40 CFR part 1037, we are proposing to replace references to 40 CFR 86.1816 or 86.1819 with a more general reference to the standards of part 86, subpart S. We propose these revisions to reduce the need to update references to specific part 86 sections if new standards are added to a different section in a future rule. We are not proposing to revise any references to specific part 86 paragraphs (*e.g.,* 40 CFR 86.1819–14(j)).

We propose to move the duplicative statements in 40 CFR 1036.105(c) and 1037.106(c) regarding CH_4 and N_2O standards from their current locations to 40 CFR 1037.101(a)(2)(i) where we currently describe the standards that apply in part 1037. We also propose to update 40 CFR 1037.101(a)(2)(i) to more accurately state that only CO_2 standards are described in 40 CFR 1037.105 and 1037.106, by removing reference to CH_4 and N_2O in that sentence. We propose to update the section title for 40 CFR 1037.102 to include the term ''Criteria'' and the list of components (*i.e.,* NO_X, HC, PM, and CO) covered by the section to be consistent with the naming convention used in 40 CFR part 1036.

4. Updates to 40 CFR Part 1065 Engine Testing Procedures

i. Engine Testing and Certification With Fuels Other Than Carbon-Containing Fuels

Alternative fuels and fuels other than carbon-containing fuels are part of the fuel pathway for sustainable biofuel, e-fuel, and clean hydrogen development under the U.S. National Blueprint for Transportation Decarbonization.[625] This blueprint anticipates a mix of battery electric, sustainable fuel, and hydrogen use to achieve a net zero carbon emissions level by 2050 for the heavy-duty sector. EPA is proposing updates to 40 CFR part 1065 to facilitate certification of engines using fuels other than carbon-containing fuels for all sectors that use engine testing to show compliance with the standards. This includes a new definition of ''carbon-containing fuel'' in 40 CFR 1065.1001, and the proposed addition of a new chemical balance procedure in section 40 CFR 1065.656 that would be used in place of the carbon-based chemical balance procedure in 40 CFR 1065.655 when an engine is certified for operation using fuels other than carbon-containing fuels (*e.g.,* hydrogen or ammonia).[626] Since these fuels do not contain carbon, the current carbon-based chemical balance cannot be used as it is designed based on comparisons of the amount of carbon in the fuel to the amount measured post combustion in the exhaust. The chemical balance for fuels other than carbon-containing fuels looks at the amount of hydrogen in the fuel versus what is measured in the exhaust. The proposed amendments also facilitate certification of an engine on a mix of carbon-containing fuels and fuels other than carbon-containing fuels.

The proposed addition of the certification option for fuels other than carbon-containing fuels relies on inputs requiring hydrogen, ammonia, and water concentration measurement from the exhaust. Therefore, we are proposing the addition of new sections in 40 CFR part 1065 and proposing revisions to some existing sections to support the procedure in 40 CFR 1065.656. We are proposing a new 40 CFR 1065.255 to provide specifications for hydrogen measurement devices, a new 40 CFR 1065.257 to provide specifications for water measurement using a Fourier Transform Infrared (FTIR) analyzer, and a new 40 CFR 1065.277 to provide specifications for ammonia measurement devices. These additions also require a proposed new 40 CFR 1065.357 to address CO_2 interference when measuring water using an FTIR analyzer, a proposed new 40 CFR 1065.377 to address H_2O interference and any other interference species as deemed by the instrument manufacturer or using good engineering judgment when measuring NH_3 using an FTIR or laser infrared analyzers, and the

[622] 81 FR 73582 (October 25, 2016) and 86 FR 34338 (June 29, 2021).

[623] This proposed sunset would remove the standards listed in the rightmost column of existing Table 1 of § 1037.670; we note that the column is intended for model years 2027 and later standards, but is mistakenly labeled ''Model years 2026 and later''.

[624] See Section III.C.2.xii for a description of the updated definition of hyrid.

[625] The U.S. National Blueprint for Transportation Decarbonization: A Joint Strategy to Transform Transportation. DOE/EE–2674. January 2023. Available at: *https://www.energy.gov/sites/default/files/2023-01/the-us-national-blueprint-for-transportation-decarbonization.pdf*.

[626] We are also proposing a definition for ''carbon-containing fuel'' in 40 CFR 1036.801 that references the proposed new 40 CFR part 1065 definition.

proposed addition of calibration gases for these new analyzer types to 40 CFR 1065.750. We are also proposing to add drift check requirements to 40 CFR 1065.550(b) to address drift correction of the H_2, O_2, H_2O, and NH_3 measurements needed in the 40 CFR 1065.656 procedure. This also includes the proposed addition of drift check requirements in 40 CFR 1065.935(g)(5)(ii) for testing with PEMS. We are also proposing to add a new 40 CFR 1065.750(a)(6) to address the uncertainty of the water concentrations generated to perform the linearity verification of the water FTIR analyzer in 40 CFR 1065.257. We are proposing two options to generate a humid gas stream. The first is via a heated bubbler where dry gas is passed through the bubbler at a controlled water temperature to generate a gas with the desired water content. The second is a device that injects heated liquid water into a gas stream. We are proposing linearity verification of the humidity generator once a year to an uncertainty of ± 3 percent;[627] however, we are not proposing to require that the calibration of the humidity generator should be NIST traceable and request comment on whether that calibration should be NIST traceable. We are proposing a requirement for a leak check after the humidity generator is assembled, as these devices are typically disassembled and stored when not in use and subsequent assembly prior to use could lead to leaks in the system. We are proposing to include calculations to determine the uncertainty of the humidity generator from measurements of dewpoint and absolute pressure. We are proposing a new definition for ''carbon-containing fuel'' and ''lean-burn'' in 40 CFR 1065.1001 to further support the addition of the certification option for engines using fuels other than carbon-containing fuels. We request comment on these proposed changes and their ability to allow certification of engines using fuels other than carbon-containing fuels.

We also request comment on whether we should add specifications for alternative test fuels, like methanol, and fuels other than carbon-containing fuels like hydrogen and ammonia, to 40 CFR part 1065, subpart H. Currently, 40 CFR 1065.701(c) allows the use of test fuels that we do not specify in 40 CFR part 1065, subpart H, with our approval. If a comment is submitted that fuel specifications should be included for these alternate test fuels, we request that the comment include specifications for the fuels the comment specifies should be included.

ii. Engine Speed Derate for Exhaust Flow Limitation

We are proposing a change to 40 CFR 1065.512(b)(1) to address the appearance of three options for generating new reference duty-cycle points for the engine to follow. The option in the existing 40 CFR 1065.512(b)(1)(i) isn't actually an option and instead gives direction on how to operate the dynamometer (torque control mode). Under our proposed revision, this sentence would be retained and moved into a new 40 CFR 1065.512(b)(1)(i) that contains some existing text split off from the current 40 CFR 1065.512(b)(1). The two remaining options in the current 40 CFR 1065.512(b)(1)(ii) and (iii) would be redesignated as 40 CFR 1065.512(b)(1)(i)(A) and (B). The proposed restructuring of 40 CFR 1065.512(b)(1) and its subparagraphs address the proposed edits described in the following paragraph.

We are proposing a change to 40 CFR 1065.512(b)(1) to address cycle validation issues where an engine with power derate intended to limit exhaust mass flowrate might include controls that reduce engine speed under cold-start conditions, resulting in reduced exhaust flow that assists other aftertreatment thermal management technologies (*e.g.* electric heater). In this case, normalized speeds would generate reference speeds above this engine speed derate, which would adversely affect cycle validation. To address this, the proposed changes would provide two options. The first option is if the engine control module (ECM) broadcasts the engine derate speed that is below the denormalized speed, the broadcast speed would then be used as the reference speed for duty-cycle validation. The second option is if an ECM broadcast signal is not available, the engine would be operated over one or more practice cycles to determine the engine derate speed as a function of cycle time. Under this option, any cycle reference speed that is greater than the engine derate speed would be replaced with the engine derate speed.

iii. Accelerated Aftertreatment Aging

We recently finalized a new accelerated aftertreatment aging procedure for use in deterioration factor determination in 40 CFR 1065.1131 through 1065.1145. We request comment on the need for potential changes to the procedure based on experience that manufacturers and test labs have gained since the procedure was finalized.

iv. Nonmethane Cutter Water Interference Correction

We recently finalized options and requirements for gaseous fueled engines to allow a correction for the effect of water on the nonmethane cutter (NMC) performance, as gaseous fueled engines produce much higher water content in the exhaust than gasoline or diesel fuels, impacting the final measured emission result.[628] The correction is done by adjusting the methane and ethane response factors used for the Total Hydrocarbon (THC) Flame Ionization Detector (FID) and the combine methane response factor and penetration fraction and combined ethane response factor and penetration fraction of the NMC FID. These response factors and penetration fractions are then used to determine NMHC and methane concentrations based on the molar water concentration in the raw or diluted exhaust. EPA is aware that test labs that have attempted to implement this correction have reported that this new option is lacking clarity with respect to the implementation of these corrections from both a procedural and emission calculation perspective. Test labs and manufacturers have also requested the option to use the water correction for all fuels, not just gaseous fuels. Test labs and manufacturers have also stated that in their view, as written, 40 CFR 1065.360(d)(12) indicates that the water correction for the methane response factor on the THC FID is required; we note that was not our intent and are thus proposing to clarify that provision.

In addition to general edits that improve the consistency of terminology and the rearrangement of some paragraphs to improve the flow of the procedure, we are proposing the following changes to 40 CFR 1065.360, 1065.365, and 1065.660 to address the concerns raised regarding implementation and use of the NMC performance corrections. In 40 CFR 1065.360 and 1065.365, we are proposing to allow the optional use of the water correction for the applicable response factors and penetration fractions for engines operated on any fuel, as the use of the correction improves the quality of the emission measurement even though the effect is less pronounced for liquid fuels. In 40 CFR 1065.360, we are proposing revisions to clarify that determination of the FID methane response factor as a

[627] The proposed verification schedule in 40 CFR 1065.750(a)(6) says: ''Calibrate the humidity generator upon initial installation, within 370 days before verifying the H_2O measurement of the FTIR, and after major maintenance.''.

[628] 86 FR 34543 (June 29, 2021).

function of molar water concentration is optional for all fuels. In 40 CFR 1065.365, we are proposing to remove the recommendation of a methane penetration fraction of greater than 0.85 for the NMC FID because the procedure will account for the effect of the penetration fraction regardless of the level of NMC methane penetration. We are also proposing a corresponding change in relation to another change proposed in this rule, such that the requirements for linearity performance of the humidity generator would meet the proposed uncertainty requirements in 40 CFR 1065.750(a)(6) that we are proposing to address the accuracy of humidity generators used in the calibration of the FTIRs used for water measurement. In 40 CFR 1065.660, we are proposing to modify equations 1065.660–2 and 1065.660–9 by adding the variable for the methane response factor and penetration fraction for the NMC FID back into the equations, which we previously removed for simplification because the value was set to a constant of one. This modification would have no effect on the outcome of the calculations in the event that the effect of water on the NMC performance is not being accounted for because the procedure directs that the methane response factor and penetration fraction for the NMC FID are set to one. In the event that the effect of water is being accounted for, these modified equations would make it easier to understand the requirements of the procedure.

v. ISO 8178 Exceptions in 40 CFR 1065.601

40 CFR 1065.601(c)(1) allows the use of ISO 8178 mass-based emission calculations instead of the calculations specified in 40 CFR part 1065 subpart G with two exceptions. We are proposing to update the section reference to the exception in 40 CFR 1065.601(c)(1)(i) for NO_X humidity and temperature correction from ISO 8178–1 Section 14.4 to ISO 8178–4 Section 9.1.6 to address updates made to ISO 8178 over the last 20 years that changed the location of this correction. We are also proposing to remove the exception for the use of the particulate correction factor for humidity in ISO 8178–1 Section 15.1 because this correction factor no longer exists in ISO 8178.

vi. Work System Boundary in 40 CFR 1065.210

Figure 1 in 40 CFR 1065.210 provides diagrams for the work inputs, outputs, and system boundaries for engines. We are proposing to update the diagram for liquid cooled engines in Figure 1 to paragraph (a) of 40 CFR 1065.210 to include electric heaters that use work from an external power source. We are also proposing to update 40 CFR 1065.210(a) to include an example of an engine exhaust electrical heater and direction on how to simulate the efficiency of the electrical generator, to account for the work of the electrical heater. We are proposing an efficiency of 67 percent, as this is the value used in 40 CFR 86.1869–12(b)(4)(xiii) as the baseline alternator efficiency when determining off-cycle improvements of high efficiency alternators. We request comment on the proposed value of 67 percent and request that commenters provide data if you comment that a value different than 67 percent should be used.

IV. Proposed Program Costs

In this section, we present the costs we estimate would be incurred by manufacturers and purchasers of HD vehicles impacted by the proposed standards. We also present the social costs of the proposed standards. Our analyses characterize the costs of the technology package described in section II.E of the preamble; however, as we note there, manufacturers may elect to comply using a different combination of HD vehicle and engine technologies than what we have identified. We break the costs into the following categories and subcategories:

(1) Technology Package Costs, which are the sum of direct manufacturing costs (DMC) and indirect costs. This may also be called the ''package RPE.'' This includes:

a. DMC, which include the costs of materials and labor to produce a product or piece of technology.

b. Indirect costs, which include research and development (R&D), warranty, corporate operations (such as salaries, pensions, health care costs, dealer support, and marketing), and profits.[629] We estimate indirect costs using retail price equivalent (RPE) markups.

(2) Manufacturer Costs, or ''manufacturer RPE,'' which is the package RPE less any applicable battery tax credits. This includes:

a. Package RPE. Traditionally, the package RPE is the manufacturer RPE in EPA cost analyses.

b. Battery tax credit from IRA section 13502, ''Advanced Manufacturing Production Credit,'' which serve to reduce manufacturer costs. The battery tax credit is described further in Sections I and II of this preamble and Chapters 1 and 2 of the DRIA.

(3) Purchaser Costs, which are the sum of purchaser upfront vehicle costs and operating costs. This includes:

a. Manufacturer RPE. In other words, the purchaser incurs the manufacturer's package costs less any applicable battery tax credits. We refer to this as the ''manufacturer RPE'' in relation to the manufacturer and, at times, the ''purchaser RPE'' in relation to the purchaser. These two terms are equivalent in this analysis.

b. Vehicle tax credit from IRA section 13403, ''Qualified Commercial Clean Vehicles,'' which serve to reduce purchaser costs. The vehicle tax credit is described further in Sections I and II of this preamble and Chapters 1 and 2 of the DRIA.

c. Electric Vehicle Supply Equipment (EVSE) costs, which are the costs associated with charging equipment. Our EVSE cost estimates include indirect costs so are sometimes referred to as ''EVSE RPE.''

d. Purchaser upfront vehicle costs, which include the manufacturer (also referred to as purchaser) RPE plus EVSE costs less any applicable vehicle tax credits.

e. Operating costs, which include fuel costs, electricity costs, costs for diesel exhaust fluid (DEF), and maintenance and repair costs.

(4) Social Costs, which are the sum of package RPE, EVSE RPE, and operating costs and computed on at a fleet level on an annual basis. This includes:

a. Package RPE which excludes applicable tax credits.

b. EVSE RPE.

c. Operating costs which include pre-tax fuel costs, DEF costs and maintenance and repair costs.

d. Note that fuel taxes and battery and vehicle tax credits are not included in the social costs. Taxes and tax credits are transfers as opposed to social costs.

We describe these costs and present our cost estimates in the text that follows. All costs are presented in 2021 dollars, unless noted otherwise. We used the MOVES scenarios discussed in DRIA Chapter 4, the reference and proposed cases,[630] to compute technology costs and operating costs as well as social costs on an annual basis. Our costs and tax credits estimated on a per vehicle basis do not change between the reference and proposal cases, but the estimated vehicle populations that would be ICE vehicles, BEVs or FCEVs do change between the reference and proposal cases. We expect an increase in BEV and FCEV sales and a decrease in ICE vehicle sales in the proposal compared to the reference case and these changes in vehicle populations are the determining factor

[629] Technology costs represent costs that manufacturers are expected to attempt to recapture via new vehicle sales. As such, profits are included in the indirect cost calculation. Clearly, profits are not a ''cost'' of compliance—EPA is not imposing new regulations to force manufacturers to make a profit. However, profits are necessary for manufacturers in the heavy-duty industry, a competitive for-profit industry, to sustain their operations. As such, manufacturers are expected to make a profit on the compliant vehicles they sell, and we include those profits in estimating technology costs.

[630] As discussed in DRIA Chapter 4.2.2, the reference case is a no-action scenario that represents emissions in the U.S. without the proposed rulemaking and the proposed case represents emissions in the U.S. with the proposed GHG standards.

for total cost differences between the reference and proposal cases.

But first we discuss the relevant IRA tax credits and how we have considered them in our estimates. Note that the analysis that follows sometimes presents undiscounted costs and sometimes presents discounted costs. We discount future costs and benefits to properly characterize their value in the present or, as directed by the Office of Management and Budget in Advisory Circular A–4, in the year costs and benefits begin. Also in Circular A–4, OMB directs use of both 3 and 7 percent discount rates as we have done with some exceptions.[631] We request comment, including data, on all aspects of the cost analysis. In particular, we request comment on our assessment of the IRA tax credits (see Sections IV.C.2 and IV.D.2) and operating costs (see Section IV.D.5). We also request comment, including data, on alternative approaches to estimating cost that may help inform our cost estimates for the final rulemaking.

A. IRA Tax Credits

Our cost analysis quantitatively includes consideration of two IRA tax credits, specifically the battery tax credit and the vehicle tax credit discussed in Sections I.C.2 and II.E.4 of the preamble and Chapters 1.3.2, 2.4.3, and 3.1 of the DRIA. We note that a detailed discussion of how these tax credits were considered in our consideration of costs in our technology packages may be found in Section II.E of the preamble and Chapter 2.4.3 of the DRIA. The battery tax credits are expected to reduce manufacturer costs, and in turn purchaser costs, as discussed in Section IV.C The vehicle tax credits are expected to reduce purchaser costs, as discussed in Section IV.D.2. For the cost analysis discussed in this Section IV, both the battery tax credit and vehicle tax credit were estimated for MYs 2027 through 2032 and then aggregated for each MOVES source type and regulatory class.

We request comment on our assessment of the impact of the IRA tax credits.

B. Technology Package Costs

Technology package costs include estimated technology costs associated with compliance with the proposed MY 2027 and later CO_2 emission standards (see Chapter 3 of the DRIA). Individual technology piece costs are presented in Chapter 2 and 3 of the DRIA. In general, for the first MY of each proposed emission standard, the per vehicle individual technology piece costs consist of the DMC estimated for each vehicle in the model year of the proposed standards and are used as a starting point in estimating both the technology package costs and total incremental costs. Following each year of when costs are first incurred, we have applied a learning effect to represent the cost reductions expected to occur via the ''learning by doing'' phenomenon.[632] The ''learning by doing'' phenomenon is the process by which doing something over and over results in learning how to do that thing more efficiently which, in turn, leads to reduced resource usage, *i.e.,* cost savings. This provides a year-over-year cost for each technology as applied to new vehicle production, which is then used to calculate total technology package costs of the proposed standards.

This technology package cost calculation approach presumes that the expected technologies would be purchased by the vehicle original equipment manufacturers (OEMs) from their suppliers. So, while the DMC estimates for the OEM in Section IV.B.1 include the indirect costs and profits incurred by the supplier, the indirect cost markups we apply in Section IV.B.2 cover the indirect costs incurred by OEMs to incorporate the new technologies into their vehicles and profit margins for the OEM typical of the heavy-duty vehicle industry. To address these OEM indirect costs, we then applied industry standard ''retail price equivalent'' (RPE) markup factors to the DMC to estimate indirect costs associated with the new technology. These factors represent an average price, or retail price equivalent (RPE), for products assuming all products recapture costs in the same way. We recognize that this is rarely the case since manufacturers typically price certain products higher than average and others lower than average (*i.e.,* they cross-subsidize). For that reason, the RPE should not be considered a price but instead should be considered more like the average cross-subsidy needed to recapture both costs and profits to support ongoing business operations. Both the learning effects applied to direct costs and the application of markup factors to estimate indirect costs are consistent with the cost estimation approaches used in EPA's past HD GHG regulatory programs.[633] The sum of the DMC and indirect costs represents our estimate of technology ''package costs'' or ''package RPE'' per vehicle year-over-year. These per vehicle technology package costs are multiplied by estimated sales for the proposed and reference scenarios. Then the total technology package-related costs for manufacturers (total package costs or total package RPE) associated with the proposed HD vehicle CO_2 standards is the difference between the proposed and reference scenarios.

1. Direct Manufacturing Costs

To produce a unit of output, manufacturers incur direct and indirect manufacturing costs. DMC include cost of materials and labor costs. Indirect manufacturing costs are discussed in the following section, IV.A.2. The DMCs presented here include the incremental technology piece costs associated with compliance with the proposed standards as compared to the technology piece costs associated with the comparable baseline vehicle.[634] We based the proposed standards on technology packages that include both ICE vehicle and ZEV technologies. In our analysis, the ICE vehicles include a suite of technologies that represent a vehicle that meets the existing MY 2027 Phase 2 CO_2 emission standards. Therefore, our direct manufacturing costs for the ICE vehicles are considered to be $0 because we did not add additional CO_2-reducing technologies to the ICE vehicles beyond those in the baseline vehicle. The DMC of the BEVs or FCEVs are the technology piece costs of replacing an ICE powertrain with a BEV or FCEV powertrain for a comparable vehicle.

Throughout this discussion, when we refer to reference case costs we are referring to our cost estimate of the no-action case (impacts absent this proposed rule) which include costs associated with replacing a comparable ICE powertrain with a BEV or FCEV powertrain for ZEV adoption rates in the reference case.

We have estimated the DMC by starting with the cost of the baseline vehicle, removing the cost of the ICE powertrain, and adding the cost of a BEV or FCEV powertrain, as presented in Chapter 2 and 3 of the DRIA. In other words, net incremental costs reflect adding the total costs of components added to the powertrain to make it a BEV or FCEV, as well as removing the

[631] See Advisory Circular A–4, Office of Management and Budget, September 17, 2003.

[632] ''Cost Reduction through Learning in Manufacturing Industries and in the Manufacture of Mobile Sources, Final Report and Peer Review Report,'' EPA–420–R–16–018, November 2016.

[633] See the 2011 heavy-duty greenhouse gas rule (76 FR 57106, September 15, 2011); the 2016 heavy-duty greenhouse gas rule (81 FR 73478, October 25, 2016).

[634] Baseline vehicles are ICE vehicles meeting the Phase 2 standards discussed in DRIA chapter 2.2.2 and the Low NO_X standards discussed in DRIA chapter 2.3.2.

total costs of components removed from a comparable ICE vehicle to make it a BEV or FCEV.

Chapter 4 of the DRIA contains a description of the MOVES vehicle source types and regulatory classes. In short, we estimate costs in MOVES for vehicle source types that have both regulatory class populations and associated emission inventories. Also, throughout this section, LHD refers to light heavy-duty vehicles, MHD refers to medium heavy-duty vehicles, and HHD refers to heavy heavy-duty vehicles.

The direct costs are then adjusted to account for learning effects on BEV, FCEV and ICE vehicle powertrains on an annual basis going forward beginning with the first year of the analysis, *e.g.* MY 2027, for the proposed and reference scenarios. Overall, we anticipate the number of ICE powertrains (including engines and transmissions) manufactured each year will decrease as more ZEVs enter the market. This scenario may lead to an increase in component costs for ICE powertrains. On the other hand, with the inclusion of new hardware costs projected to meet the HD2027 emission standards, we would expect learning effects would reduce the incremental cost of these technologies. Chapter 3 of the DRIA includes a detailed description of the approach used to apply learning effects in this analysis and we request data and information to refine our learning effects. The resultant DMC per vehicle and how those costs decrease over time on a fleet level are presented in Section IV.E.1 of this preamble. We request comment on this approach, including methods for accounting for the projected future ICE costs.

2. Indirect Manufacturing Costs

Indirect manufacturing costs are all the costs associated with producing the unit of output that are not direct manufacturing costs—for example, they may be related to research and development (R&D), warranty, corporate operations (such as salaries, pensions, health care costs, dealer support, and marketing) and profits. An example of a R&D cost for this proposal includes the engineering resources required to develop a battery state of health monitor as described in Section III.B.1. An example of a warranty cost is the future cost covered by the manufacturer to repair defective BEV or FCEV components and meet the warranty requirements proposed in Section III.B.2. Indirect costs are generally recovered by allocating a share of the indirect costs to each unit of goods sold. Although direct costs can be allocated to each unit of goods sold, it is more challenging to account for indirect costs allocated to a unit of goods sold. To ensure that regulatory analyses capture the changes in indirect costs, markup factors (which relate total indirect costs to total direct costs) have been developed and used by EPA and other stakeholders. These factors are often referred to as retail price equivalent (RPE) multipliers and are typically applied to direct costs to estimate indirect costs. RPE multipliers provide, at an aggregate level, the proportionate share of revenues relative shares of revenue where:

Revenue = Direct Costs + Indirect Costs

Revenue/Direct Costs = 1 + Indirect Costs/ Direct Costs = RPE multiplier

Resulting in:

Indirect Costs = Direct Costs × (RPE − 1)

If the relationship between revenues and direct costs (*i.e.,* RPE multiplier) can be shown to equal an average value over time, then an estimate of direct costs can be multiplied by that average value to estimate revenues, or total costs. Further, that difference between estimated revenues, or total costs, and estimated direct costs can be taken as the indirect costs. Cost analysts and regulatory agencies have frequently used these multipliers to predict the resultant impact on costs associated with manufacturers' responses to regulatory requirements and we are using that approach in this analysis.

The proposed cost analysis estimates indirect costs by applying the RPE markup factor used in past EPA rulemakings (such as those setting GHG standards for heavy-duty vehicles and engines).[635] The markup factors are based on company filings with the Securities and Exchange Commission for several engine and engine/vehicle manufacturers in the heavy-duty industry.[636] The RPE factors for the HD vehicle industry as a whole are shown in Table IV–1. Also shown in Table IV–1 are the RPE factors for light-duty vehicle manufacturers.[637]

TABLE IV–1—RETAIL PRICE EQUIVALENT FACTORS IN THE HEAVY-DUTY AND LIGHT-DUTY INDUSTRIES

Cost contributor	HD truck industry[638]	LD vehicle industry
Direct manufacturing cost	1.00	1.00
Warranty	0.03	0.03
R&D	0.05	0.05
Other (admin, retirement, health, etc.)	0.29	0.36
Profit (cost of capital)	0.05	0.06
RPE	1.42	1.50

For this analysis, EPA based indirect cost estimates for diesel and compressed natural gas (CNG) regulatory classes on the HD Truck Industry RPE value shown in Table IV–1. We are using an RPE of 1.42 to compute the indirect costs associated with the replacement of a diesel-fueled or CNG-fueled powertrain with a BEV or FCEV powertrain. For this analysis, EPA based indirect cost estimates for gasoline regulatory classes on the LD Vehicle RPE value shown in Table IV–1. We are using an RPE of 1.5 to compute the indirect costs associated with the replacement of a gasoline-fueled powertrain with a BEV or FCEV powertrain. The heavy-duty vehicle industry is becoming more vertically integrated and the direct and indirect manufacturing costs we are analyzing are those that reflect the technology packages costs OEMs would try to recover at the end purchaser, or retail, level. For that reason, we believe the two respective vehicle industry RPE values represent the most appropriate factors for this analysis. We request data

[635] 76 FR 57106; 81 FR 73478.

[636] Heavy Duty Truck Retail Price Equivalent and Indirect Cost Multipliers, Draft Report, July 2010.

[637] Rogozhin,A., et al., Using indirect cost multipliers to estimate the total cost of adding new technology in the automobile industry. International Journal of Production Economics (2009), doi:10.1016/j.ijpe.2009.11.031.

[638] Note that the report used the term ''HD Truck'' while EPA generally uses the term ''HD vehicle;'' they are equivalent when referring to this report.

to inform RPE factors for the heavy-duty industry.

3. Vehicle Technology Package RPE

Table IV–2 presents the total fleet-wide incremental technology costs estimated for the proposal relative to the reference case for the projected adoption of ZEVs in our technology package relative to the reference case on an annual basis. As previously explained in this section, the costs shown in Table IV–2 reflect marginal direct and indirect manufacturing costs of the technology package for the proposed CO_2 standards as compared to the baseline vehicle.

It is important to note that these are costs and not prices. We do not attempt to estimate how manufacturers would price their products in the technology package costs. Manufacturers may pass costs along to purchasers via price increases that reflect actual incremental costs to manufacture a ZEV when compared to a comparable ICE vehicle. However, manufacturers may also price products higher or lower than what would be necessary to account for the incremental cost difference. For instance, a manufacturer may price certain products higher than necessary and price others lower with the higher-priced products effectively subsidizing the lower-priced products. This pricing strategy may be true in any market and is not limited to the heavy-duty vehicle industry. It may be used for a variety of reasons, not solely as a response to regulatory programs.

TABLE IV–2—TOTAL FLEET-WIDE INCREMENTAL TECHNOLOGY COSTS FOR ZEVS, FOR THE PROPOSED OPTION RELATIVE TO THE REFERENCE CASE MILLIONS OF 2021 DOLLARS [a]

Calendar year	Vehicle package RPE
2027	$2,000
2028	1,800
2029	1,700
2030	2,000
2031	2,300
2032	2,000
2033	1,500
2034	1,300
2035	1,000
2036	750
2037	620
2038	410
2039	220
2040	140
2041	−40
2042	−200
2043	−360
2044	−410
2045	−550
2046	−690
2047	−820
2048	−850
2049	−970
2050	−1,100
2051	−1,100
2052	−1,200
2053	−1,300
2054	−1,400
2055	−1,500
PV, 3%	9,000
PV, 7%	10,000

[a] Values rounded to two significant digits; negative values denote lower costs, i.e., savings in expenditures.

C. Manufacturer Costs

1. Relationship to Technology Package RPE

The manufacturer costs in EPA's past HD GHG rulemaking cost analyses on an average-per-vehicle basis was only the average-per-vehicle technology package RPE described in Section II.F.5.i. However, in the cost analysis for this proposal, we are also taking into account the IRA battery tax credit in our estimates of manufacturer costs (also referred to in this section as manufacturer's RPE), as we expect the battery tax credit to reduce manufacturer costs, and in turn purchaser costs.

2. Battery Tax Credit

Table IV–3 shows the annual estimated fleet-wide battery tax credits from IRA section 13502, ''Advanced Manufacturing Production Credit,'' for the proposal relative to the reference case in 2021 dollars. These estimates were based on the detailed discussion in DRIA Chapter 2 of how we considered battery tax credits. Both BEVs and FCEVs include a battery in the powertrain system that may meet the IRA battery tax credit requirements if the applicable criteria are met. The battery tax credits begin to phase down starting in CY 2030 and expire after CY 2032.

TABLE IV–3—BATTERY TAX CREDIT IN MILLIONS OF 2021 DOLLARS FOR THE PROPOSED OPTION RELATIVE TO THE REFERENCE CASE [a]

Calendar year	Battery tax credits
2027	$340
2028	560
2029	880
2030	890
2031	650
2032	380
2033 and later	0
PV, 3%	3,300
PV, 7%	2,900

[a] Values rounded to two significant digits.

3. Manufacturer RPE

The manufacturer RPE for BEVs is calculated by subtracting the battery tax credit in Table IV–3 from the corresponding technology package RPE from Table IV–2 and the resultant manufacturer RPE is shown in Table IV–4. Table IV–4 reflects learning effects on vehicle package RPE and battery tax credits from CY 2027 through 2055. The sum of the vehicle package RPE and battery tax credits for each year is shown in the manufacturer RPE column. The difference in manufacturer RPE between the proposal and reference case is presented in Table IV–4.

TABLE IV–4—TOTAL VEHICLE PACKAGE RPE, BATTERY TAX CREDITS, AND MANUFACTURER RPE (INCLUDING BATTERY TAX CREDITS) FOR THE PROPOSED OPTION RELATIVE TO THE REFERENCE CASE, ALL REGULATORY CLASSES AND ALL FUELS, MILLIONS OF 2021 DOLLARS [a]

Calendar year	Vehicle package RPE	Battery tax credits	Manufacturer RPE
2027	$2,000	−$340	$1,600
2028	1,800	−560	1,200
2029	1,700	−880	820
2030	2,000	−890	1,100

TABLE IV–4—TOTAL VEHICLE PACKAGE RPE, BATTERY TAX CREDITS, AND MANUFACTURER RPE (INCLUDING BATTERY TAX CREDITS) FOR THE PROPOSED OPTION RELATIVE TO THE REFERENCE CASE, ALL REGULATORY CLASSES AND ALL FUELS, MILLIONS OF 2021 DOLLARS [a]—Continued

Calendar year	Vehicle package RPE	Battery tax credits	Manufacturer RPE
2031	2,300	−650	1,700
2032	2,000	−380	1,700
2033	1,500	0	1,500
2034	1,300	0	1,300
2035	1,000	0	1,000
2036	750	0	750
2037	620	0	620
2038	410	0	410
2039	220	0	220
2040	140	0	140
2041	−40	0	−40
2042	−200	0	−200
2043	−360	0	−360
2044	−410	0	−410
2045	−550	0	−550
2046	−690	0	−690
2047	−820	0	−820
2048	−850	0	−850
2049	−970	0	−970
2050	−1,100	0	−1,100
2051	−1,100	0	−1,100
2052	−1,200	0	−1,200
2053	−1,300	0	−1,300
2054	−1,400	0	−1,400
2055	−1,500	0	−1,500
PV, 3%	9,000	−3,300	5,700
PV, 7%	10,000	−2,900	7,100

[a] Values rounded to two significant digits; negative values denote lower costs, i.e., savings in expenditures.

D. Purchaser Costs

1. Purchaser RPE

The purchaser RPE is the estimated upfront vehicle cost paid by the purchaser prior to considering the IRA vehicle tax credits. Note, as explained in Section IV.C, we do consider the IRA battery tax credit in estimating the manufacturer RPE, which in this analysis we then consider to be equivalent to the purchaser RPE because we assume full pass-through of the IRA battery tax credit from the manufacturer to the purchaser. In other words, in this analysis, the manufacturer RPE and purchaser RPE are equivalent terms. The purchaser RPEs reflect the same values as the corresponding manufacturer RPEs presented in Section IV.C.3.

2. Vehicle Purchase Tax Credit

Table IV–5 shows the annual estimated vehicle tax credit for BEV and FCEV vehicles from IRA section 13403, ''Qualified Commercial Clean Vehicles,'' for the proposal relative to the reference case, in 2021 dollars. These estimates were based on the detailed discussion in DRIA Chapter 2 of how we considered vehicle tax credits. The vehicle tax credits carry through to MY 2032 with the value diminishing over time as vehicle costs decrease due to the learning effect as shown in DRIA Chapter 2. Beginning in CY 2033, the tax credit program expires.

TABLE IV–5—VEHICLE TAX CREDIT IN MILLIONS 2021 DOLLARS FOR THE PROPOSED OPTION RELATIVE TO THE REFERENCE CASE [a]

Calendar year	Tax credit
2027	$810
2028	670
2029	630
2030	1,100
2031	1,600
2032	1,900
2033 and later	0
PV, 3%	5,900
PV, 7%	5,000

[a] Values rounded to two significant digits.

3. Electric Vehicle Supply Equipment Costs

EVSE and associated costs are described in Chapter 2.6 of the DRIA. EVSE is needed for charging of BEVs and is not needed for FCEVs.[639] The EVSE cost estimates are assumed to include both direct and indirect costs and are sometimes referred to in this proposal as EVSE RPE costs. For these EVSE cost estimates, we assume that up to two vehicles can share one DCFC port if there is sufficient dwell time for both vehicles to meet their daily charging needs.[640] While fleet owners may also choose to share Level 2 chargers across vehicles, we are conservatively assigning one Level 2 charger per vehicle. As discussed in the DRIA, we assume that EVSE costs are incurred by purchasers, *i.e.* heavy-duty vehicle purchasers/owners. Some purchasers may be eligible for a Federal tax credit for charging equipment.[641] See DRIA

[639] As discussed in DRIA Chapter 2.5, rather than focusing on depot hydrogen fueling infrastructure costs that would be incurred upfront, we included FCEV infrastructure costs in our per-kilogram retail price of hydrogen. Retail price of hydrogen is the total price of hydrogen when it becomes available to the end user, including the costs of production, distribution, storage, and dispensing at a fueling station. This approach is consistent with the method we use in HD TRUCS for comparable ICE vehicles, where the equivalent diesel fuel costs are included in the diesel fuel price instead of accounting for the costs of fuel stations separately.

[640] We note that for some of the vehicle types we evaluated, more than two vehicles could share a DCFC port and still meet their daily electricity consumption needs. However, we are choosing to limit DCFC sharing to two vehicles per EVSE port pending market developments and more robust dwell time estimates.

[641] IRA Section 13404, ''Alternative Fuel Refueling Property Credit,'' modifies an existing Federal tax credit available for alternative fuel refueling property, including EV charging equipment, and extends the tax credit through

Chapter 1.3.2 for a discussion of this tax credit and DRIA Chapter 2.6.5.2 for a description of how we considered it in our cost analysis. We analyzed EVSE costs in 2021 dollars on a fleet-wide basis for this analysis. The annual costs associated with EVSE in the proposal relative to the reference case are shown in Table IV–6.

We request comment on our estimated EVSE costs as well as our proposal to add EVSE costs to each vehicle's purchaser RPE costs in estimating purchaser costs.

TABLE IV–6—EVSE COSTS FOR THE PROPOSED OPTION RELATIVE TO THE REFERENCE CASE, MILLIONS 2021 DOLLARS [a]

Calendar year	EVSE costs
2027	$1,300
2028	1,600
2029	1,900
2030	2,000
2031	2,200
2032	2,600
2033	2,600
2034	2,600
2035	2,500
2036	2,500
2037	2,500
2038	2,500
2039	2,600
2040	2,600
2041	2,600
2042	2,600
2043	2,700
2044	2,700
2045	2,700
2046	2,700
2047	2,700
2048	2,700
2049	2,800
2050	2,800
2051	2,800
2052	2,900
2053	2,900
2054	2,900
2055	2,900
PV, 3%	47,000
PV, 7%	29,000

[a] Values rounded to two significant digits.

4. Purchaser Upfront Vehicle Costs

The expected upfront incremental costs to the purchaser include the purchaser RPE discussed in Section IV.D.1 less the vehicle tax credit discussed in Section IV.D.2 plus the EVSE RPE in IV.D.3. Table IV–7 shows the estimated incremental upfront purchaser costs for BEVs and FCEVs by calendar year for the proposed option relative to the reference case. Note that EVSE costs are associated with BEVs only; FCEVs do not have any associated EVSE costs.

TABLE IV–7—INCREMENTAL PURCHASER UPFRONT COSTS FOR THE PROPOSED OPTION RELATIVE TO THE REFERENCE CASE FOR IN MILLIONS 2021 DOLLARS [a]

Calendar year	Purchaser RPE	Vehicle purchase tax credit	EVSE costs	Total upfront purchaser cost
2027	$1,600	−$810	$1,300	$2,200
2028	1,200	−670	1,600	2,100
2029	820	−630	1,900	2,100
2030	1,100	−1,100	2,000	2,100
2031	1,700	−1,600	2,200	2,300
2032	1,700	−1,900	2,600	2,400
2033	1,500	0	2,600	4,100
2034	1,300	0	2,600	3,800
2035	1,000	0	2,500	3,500
2036	750	0	2,500	3,200
2037	620	0	2,500	3,100
2038	410	0	2,500	3,000
2039	220	0	2,600	2,800
2040	140	0	2,600	2,700
2041	−40	0	2,600	2,600
2042	−200	0	2,600	2,400
2043	−360	0	2,700	2,300
2044	−410	0	2,700	2,300
2045	−550	0	2,700	2,100
2046	−690	0	2,700	2,000
2047	−820	0	2,700	1,900
2048	−850	0	2,700	1,900
2049	−970	0	2,800	1,800
2050	−1,100	0	2,800	1,700
2051	−1,100	0	2,800	1,700
2052	−1,200	0	2,900	1,700
2053	−1,300	0	2,900	1,600
2054	−1,400	0	2,900	1,500
2055	−1,500	0	2,900	1,400
PV, 3%	5,700	−5,900	47,000	47,000
PV, 7%	7,100	−5,000	29,000	31,000

[a] Values rounded to two significant digits; negative values denote lower costs, *i.e.,* savings in expenditures.

2032. Beginning in 2023, this provision provides a tax credit of up to 30 percent of the cost of the qualified alternative fuel refueling property (*e.g.* HD BEV charger), up to 100,000, when located in low-income or non-urban area census tracts and certain other other requirements are met.

5. Operating Costs

We have estimated three types of operating costs associated with the proposed HD Phase 3 CO_2 emission standards and our potential projected technology pathway to comply with those proposed standards that includes BEV or FCEV powertrains. These three types of operating costs include decreased fuel costs of BEVs compared to comparable ICE vehicles, avoided diesel exhaust fluid (DEF) consumption by BEVs and FCEVs compared to comparable diesel-fueled ICE vehicles, and reduced maintenance and repair costs of BEVs and FCEVs as compared to comparable ICE vehicles. To estimate each of these costs, the results of MOVES runs, as discussed in DRIA Chapter 4, were used to estimate costs associated with fuel consumption, DEF consumption, and VMT. We have estimated the net effect on fuel costs, DEF costs, and maintenance and repair costs. We describe our approach in this Section IV.D.5.

Additional details on our methodology and estimates of operating costs per mile impacts are included in DRIA Chapter 3.4. Chapter 4 of the DRIA contains a description of the MOVES vehicle source types and regulatory classes. In short, we estimate costs in MOVES for vehicle source types that have both regulatory class populations and associated emission inventories. Also, throughout this section, LHD refers to light heavy-duty vehicles, MHD refers to medium heavy-duty vehicles, and HHD refers to heavy heavy-duty vehicles.

i. Costs Associated With Fuel Usage

To determine the total costs associated with fuel usage for MY 2027 vehicles, the fuel usage for each MOVES source type and regulatory class was multiplied by the fuel price from the AEO 2022 reference case for diesel, gasoline, and CNG prices over the first 28 years of the lifetime of the vehicle.[642] Fuel costs per gallon and kWh are discussed in DRIA Chapter 2. We used retail fuel prices since we expect that retail fuel prices are the prices paid by owners of these ICE vehicles. For electric vehicle costs, the electricity price from the AEO 2022 reference case for commercial electricity end-use prices in cents per kWh was multiplied by the fuel usage in kWh.[643] For hydrogen vehicle fuel costs, a value of $6.10/kg starting in 2027 and linearly decreasing to $4/kg in 2030 and held constant until 2055, as discussed in DRIA Chapter 2.5.3.1, was multiplied by fuel usage in kg. To calculate the average cost per mile of fuel usage for each scenario, MOVES source type and regulatory class, the fuel cost was divided by the VMT for each of the MY 2027 vehicles over the 28-year period. The estimates of fuel cost per mile for MY 2027 vehicles under the proposal are shown in Table IV–8 with 3 percent discounting and Table IV–9 with 7 percent discounting. Values shown as a dash (''-''), in Table IV–8 and Table IV–9 represent cases where a given MOVES source type and regulatory class did not use a specific fuel type for MY 2027 vehicles.[644]

TABLE IV–8—RETAIL FUEL COST PER MILE FOR MY 2027 VEHICLES DURING THE FIRST 28 YEARS FOR EACH MOVES SOURCE TYPE AND REGULATORY CLASS BY FUEL TYPE [a]

[Cents/Mile in 2021 dollars, 3% discounting]

MOVES source type	Regulatory class	Diesel	Gasoline	Electricity	CNG	Hydrogen
Other Buses	LHD45	-	37.2	23.9	-	-
	MHD67	31.3	-	29.5	-	-
	HHD8	32.4	-	30.6	40.1	-
Transit Bus	LHD45	-	37.1	14.7	-	-
	MHD67	31.5	-	18.0	-	-
	Urban Bus	32.8	-	18.4	40.1	-
School Bus	LHD45	-	27.5	10.1	-	-
	MHD67	24.4	30.4	13.1	-	-
	HHD8	25.7	-	13.8	32.5	-
Refuse Truck	MHD67	33.9	43.0	22.2	-	-
	HHD8	35.3	-	23.2	44.1	-
Single Unit Short-haul Truck	LHD45	16.7	25.7	9.0	-	-
	MHD67	25.3	32.5	13.7	-	-
	HHD8	30.4	-	16.4	38.5	-
Single Unit Long-haul Truck	LHD45	15.7	24.4	14.9	-	23.2
	MHD67	23.7	30.4	22.6	-	35.1
	HHD8	28.5	-	27.1	36.4	42.2
Combination Short-haul Truck	MHD67	34.5	-	24.8	-	-
	HHD8	36.0	-	25.9	42.9	-
Combination Long-haul Truck	MHD67	33.0	-	-	-	47.6
	HHD8	33.6	-	-	39.4	48.5

[a] Values rounded to the nearest tenth of a cent; dashes (''-'') represent cases where there are no vehicles powered by that specific fuel type in our MOVES runs for each specific source type and regulatory class of MY 2027 vehicles.

[642] Reference Case Projection Tables, U.S. Energy Information Administration. Annual Energy Outlook 2022.

[643] U.S. Energy Information Administration. Annual Energy Outlook 2022.

[644] For example, there were no vehicles in our MOVES runs for the transit bus source type in the LHD45 regulatory class that where diesel-fueled, so the value in the table is represented as a dash (''-'').

TABLE IV–9—RETAIL FUEL COST PER MILE FOR MODEL YEAR 2027 VEHICLES DURING THE FIRST 28 YEARS FOR EACH MOVES SOURCE TYPE AND REGULATORY CLASS BY FUEL TYPE [a]

[Cents/mile in 2021 dollars, 7% discounting]

MOVES source type	Regulatory class	Diesel	Gasoline	Electricity	CNG	Hydrogen
Other Buses	LHD45	-	26.3	16.9	-	-
	MHD67	22.1	-	20.9	-	-
	HHD8	22.9	-	21.7	28.3	-
Transit Bus	LHD45	-	26.5	10.6	-	-
	MHD67	22.6	-	12.9	-	-
	Urban Bus	23.5	-	13.2	28.6	-
School Bus	LHD45	-	19.4	7.2	-	-
	MHD67	17.3	21.4	9.3	-	-
	HHD8	18.2	-	9.8	22.9	-
Refuse Truck	MHD67	24.9	31.4	16.3	-	-
	HHD8	25.9	-	17.0	32.2	-
Single Unit Short-haul Truck	LHD45	12.8	19.6	6.9	-	-
	MHD67	19.4	24.8	10.5	-	-
	HHD8	23.3	-	12.6	29.3	-
Single Unit Long-haul Truck	LHD45	12.2	18.9	11.6	-	18.3
	MHD67	18.4	23.6	17.5	-	27.8
	HHD8	22.1	-	21.0	28.2	33.3
Combination Short-haul Truck	MHD67	27.0	-	19.4	-	-
	HHD8	28.2	-	20.2	33.5	-
Combination Long-haul Truck	MHD67	24.8	-	-	-	36.4
	HHD8	25.3	-	-	29.6	37.1

[a] Values rounded to the nearest tenth of a cent; dashes ("-") represent cases where there are no vehicles powered by that specific fuel type in our MOVES runs for each specific source type and regulatory class of MY 2027 vehicles.

ii. Costs Associated With Diesel Exhaust Fluid

DEF consumption costs in heavy-duty vehicles were estimated in the HD2027 final rule.[645] We are applying the same methodology in this analysis to estimate the total costs of DEF under the proposed HD Phase 3 CO_2 standards. An example of total cost estimates of DEF for MY 2027 vehicles is provided in Table IV–10 and Table IV–11 for 3 percent and 7 percent discounting, respectively. To determine the total costs associated with DEF usage for MY 2027 vehicles, the DEF usage for each MOVES source type and regulatory class was multiplied by the DEF price over the first 28 years of the lifetime of the vehicle.[646] To calculate the average cost of DEF per mile for each MOVES Source Type and regulatory class, the total DEF cost was divided by the total VMT for each of the MY 2027 vehicles over the 28-year period. The DEF cost was computed for the reference case and proposed standard. The estimates on DEF cost per mile for the reference and proposed cases are shown in Table IV–10 for 3 percent discounting and Table IV–11 for 7 percent discounting. Several source types and regulatory classes contain no diesel-fueled ICE vehicles and therefore no DEF consumption costs. These cases are represented as zeros in Table IV–10 and Table IV–11. Table IV–10 and Table IV–11 show a reduction or no change in DEF costs per mile, which is to be expected due to an increased number of BEVs and FCEVs modeled for the proposed case compared to the reference case.

TABLE IV–10—DEF COST PER MILE FOR MODEL YEAR 2027 VEHICLES DURING THE FIRST 28 YEARS FOR EACH MOVES SOURCE TYPE AND REGULATORY CLASS ACROSS ALL FUEL TYPES [a]

[Cents/Mile in 2021 dollars, 3% discounting]

MOVES source type	Regulatory class	Cost in reference	Cost in proposal	Proposal change from reference
Other Buses	LHD45	0.00	0.00	0.00
	MHD67	1.89	1.61	−0.29
	HHD8	1.72	1.72	0.00
Transit Bus	LHD45	0.00	0.00	0.00
	MHD67	1.90	1.85	−0.05
	Urban Bus	1.74	1.74	0.00
School Bus	LHD45	0.00	0.00	0.00
	MHD67	1.37	0.96	−0.40
	HHD8	1.32	1.11	−0.20
Refuse Truck	MHD67	2.03	2.03	0.00
	HHD8	1.86	1.58	−0.28
Single Unit Short-haul Truck	LHD45	0.52	0.44	−0.08
	MHD67	1.24	1.07	−0.18
	HHD8	1.70	1.40	−0.30

[645] 88 FR 4296, January 24, 2023.

[646] This analysis uses the DEF prices presented in the NCP Technical Support Document (see "Nonconformance Penalties for On-highway Heavy-duty Diesel Engines: Technical Support Document," EPA–420–R–12–014) with growth beyond 2042 projected at the same 1.3 percent rate as noted in the NCP TSD. Note that the DEF prices used update the NCP TSD's 2011 prices to 2021 dollars.

TABLE IV–10—DEF COST PER MILE FOR MODEL YEAR 2027 VEHICLES DURING THE FIRST 28 YEARS FOR EACH MOVES SOURCE TYPE AND REGULATORY CLASS ACROSS ALL FUEL TYPES [a]—Continued

[Cents/Mile in 2021 dollars, 3% discounting]

MOVES source type	Regulatory class	Cost in reference	Cost in proposal	Proposal change from reference
Single Unit Long-haul Truck	LHD45	0.48	0.41	−0.07
	MHD67	1.16	1.05	−0.12
	HHD8	1.59	1.43	−0.16
Combination Short-haul Truck	MHD67	2.08	1.92	−0.16
	HHD8	2.17	1.98	−0.18
Combination Long-haul Truck	MHD67	2.00	2.00	0.00
	HHD8	2.04	2.04	0.00

[a] Values rounded to the nearest hundredth of a cent; Negative values denote lower costs, *i.e.,* savings in expenditures.

TABLE IV–11—DEF COST PER MILE FOR MODEL YEAR 2027 VEHICLES DURING THE FIRST 28 YEARS FOR EACH MOVES SOURCE TYPE AND REGULATORY CLASS ACROSS ALL FUEL TYPES [a]

[Cents/mile in 2021 dollars, 7% discounting]

MOVES source type	Regulatory class	Cost in reference	Cost in proposal	Proposal change from reference
Other Buses	LHD45	0.00	0.00	0.00
	MHD67	1.32	1.12	−0.20
	HHD8	1.20	1.20	0.00
Transit Bus	LHD45	0.00	0.00	0.00
	MHD67	1.34	1.31	−0.04
	Urban Bus	1.23	1.23	0.00
School Bus	LHD45	0.00	0.00	0.00
	MHD67	0.95	0.67	−0.28
	HHD8	0.92	0.78	−0.14
Refuse Truck	MHD67	1.47	1.47	0.00
	HHD8	1.35	1.15	−0.20
Single Unit Short-haul Truck	LHD45	0.39	0.33	−0.06
	MHD67	0.94	0.81	−0.13
	HHD8	1.29	1.06	−0.23
Single Unit Long-haul Truck	LHD45	0.37	0.32	−0.06
	MHD67	0.90	0.81	−0.09
	HHD8	1.22	1.10	−0.12
Combination Short-haul Truck	MHD67	1.62	1.49	−0.12
	HHD8	1.68	1.54	−0.14
Combination Long-haul Truck	MHD67	1.50	1.50	0.00
	HHD8	1.52	1.52	0.00

[a] Values rounded to the nearest hundredth of a cent; negative values denote lower costs, *i.e.,* savings in expenditures.

iii. Costs Associated With Maintenance and Repair

We assessed the estimated maintenance and repair costs of HD BEVs and FCEVs and compared these estimates with estimated maintenance and repair costs for comparable HD ICE vehicles. The results of our analysis show that maintenance and repair costs associated with HD BEVs and FCEVs are estimated to be lower than maintenance and repair costs associated with comparable ICE vehicles. The methodology for how we calculated maintenance and repair costs were estimated is discussed in Chapter 2 and 3 of the DRIA.

For the estimate of maintenance and repair costs for diesel-fueled ICE vehicles, we relied on the research compiled by Burnham et al., 2021, in Chapter 3.5.5 of ''Comprehensive Total Cost of Ownership Quantification for Vehicles with Different Size Classes and Powertrains'' and used equations found in the BEAN model.[647] [648] Burnham et al. used data from Utilimarc and ATRI to estimate maintenance and repair costs per mile for multiple heavy-duty vehicle categories over time. We selected the box truck curve to represent vocational vehicles and short-haul tractors, and the semi-tractor curve to represent long-haul tractors. We assumed that gasoline and CNG vehicles had the same maintenance and repair costs curves as diesel vehicles.

For BEVs and FCEVs, as discussed in Chapter 2 of the DRIA, the per-mile rate of brake wear is expected to be lower when compared to comparable ICE vehicles. Several literature sources propose multiplying diesel vehicle maintenance costs by a factor to estimate BEV and FCEV maintenance costs. We followed this approach and used a factor of 0.71 for BEVs and 0.75 for FCEV, based on the research in Wang et al., 2022.[649] Details of the

[647] Burnham, A., Gohlke, D., Rush, L., Stephens, T., Zhou, Y., Delucchi, M.A., Birky, A., Hunter, C., Lin, Z., Ou, S., Xie, F., Proctor, C., Wiryadinata, S., Liu, N., Boloor, M. ''Comprehensive Total Cost of Ownership Quantification for Vehicles with Different Size Classes and Powertrains''. Argonne National Laboratory. Chapter 3.5.5. April 1, 2021. Available at *https://publications.anl.gov/anlpubs/2021/05/167399.pdf.*

[648] Argonne National Lab, Vehicle & Mobility Systems Group, BEAN, found at: *https://vms.taps.anl.gov/tools/bean/* (accessed August 2022).

[649] Wang, G., Miller, M., and Fulton, L.'' Estimating Maintenance and Repair Costs for Battery Electric and Fuel Cell Heavy Duty Trucks,

maintenance and repair on a cost per mile basis are discussed in Chapter 3 of the DRIA.

The impacts of maintenance and repairs for MY 2027 vehicles in each MOVES source type associated with the reference and proposed cases are shown in Table IV–12 and Table IV–13 for 3- and 7-percent discount rates, respectively. The proposed case shows either no change [650] or reductions in maintenance and repair costs when compared to the reference case.

TABLE IV–12—MAINTENANCE AND REPAIR PER MILE FOR MODEL YEAR 2027 VEHICLES DURING THE FIRST 28 YEARS FOR EACH MOVES SOURCE TYPE, FOR ALL VEHICLE TYPES [a]

[Cents/mile in 2021 dollars, 3% discounting]

MOVES source type	Cost in reference	Cost in proposal	Proposal change from reference
Other Buses	80.0	74.8	−5.2
Transit Bus	78.4	75.6	−2.8
School Bus	80.1	73.9	−6.2
Refuse Truck	75.4	72.8	−2.6
Single Unit Short-haul Truck	69.2	66.2	−3.1
Single Unit Long-haul Truck	67.0	64.4	−2.5
Combination Short-haul Truck	66.1	64.6	−1.6
Combination Long-haul Truck	25.9	25.9	0.0

[a] Values rounded to the nearest tenth of a cent; negative values denote lower costs, *i.e.,* savings in expenditures.

TABLE IV–13—MAINTENANCE AND REPAIR PER MILE FOR MODEL YEAR 2027 VEHICLES DURING THE FIRST 28 YEARS FOR EACH MOVES SOURCE TYPE, FOR ALL VEHICLE TYPES [a]

[Cents/mile in 2021 dollars, 7% discounting]

MOVES source type	Cost in reference	Cost in proposal	Proposal change from reference
Other Buses	48.8	45.6	−3.2
Transit Bus	48.5	46.8	−1.7
School Bus	48.8	45.0	−3.8
Refuse Truck	48.8	47.1	−1.7
Single Unit Short-haul Truck	47.5	45.4	−2.1
Single Unit Long-haul Truck	46.8	45.1	−1.8
Combination Short-haul Truck	47.1	46.0	−1.1
Combination Long-haul Truck	17.5	17.5	0.0

[a] Values rounded to the nearest tenth of a cent; negative values denote lower costs, *i.e.,* savings in expenditures.

6. Payback

A payback period is the point in time at which savings from reduced operating expenses surpass increased upfront costs, typically estimated in years. The payback period for a new vehicle purchase is an important metric for many HD vehicle purchasers. In general, there is greater willingness to pay for new technology if that new technology ''pays back'' within an acceptable period of time. A payback period is calculated in DRIA Chapter 2.8.2 using HD TRUCS for specific use cases. Briefly, the incremental upfront costs for ZEV vehicles are estimated in contrast to comparable ICE vehicles. In these incremental upfront purchaser costs for ZEVs, IRA battery and vehicle tax credits were taken into consideration. Then the expected operating costs differences between ZEV and ICE vehicles are computed over time on an annual basis. When the operating costs savings offset the incremental upfront differences between ZEV and ICE vehicles, a breakeven point is met. The amount of time from purchase to the breakeven point is defined as the payback period. Payback periods are computed for specific vehicle types in DRIA Chapter 2.8.2. See preamble Section II.E.6 for further discussion on payback for the technology packages for the proposed standards. The calculations do not represent specific vehicle classes or specific use cases. However, the payback periods do provide a general sense, on average, of payback periods at a national level.

E. Social Costs

To compute the social costs of the proposal, we added the estimated total vehicle technology package RPE from Section IV.B.3, total operating costs from Section IV.D.5, and total EVSE RPE from Section IV.D.3. We note that the fuel costs in this subsection's social cost analysis are estimated pre-tax rather than what the purchaser would pay (*i.e.,* the retail fuel price). All of the costs are computed for the MOVES reference and proposed cases and cost impacts are presented as the difference between the proposed and reference case. Additionally, neither the battery tax credit nor the vehicle tax credit is included in the social costs analysis discussed in this subsection.

1. Total Vehicle Technology Package RPE

Table IV–14 reflects learning effects on DMC and indirect costs from 2027 through 2055. The sum of the DMC and indirect manufacturing cost for each year is shown in the ''Total Technology

2022. Available online: *https://escholarship.org/content/qt36c08395/qt36c08395_noSplash_589098e470b036b3010eae00f3b7b618.pdf?t=r6zwjb.*

[650] There are no changes to vehicle populations for MY 2027 between the proposal and reference cases for the MOVES source type Combination Long-haul Truck, which is why the maintenance and repair cost per mile shows no change between the proposal and reference case.

Package Costs'' column and reflects the difference in total cost between the proposed and reference case in the specific calendar year.

TABLE IV–14—TOTAL TECHNOLOGY COST IMPACTS OF THE PROPOSED OPTION RELATIVE TO THE REFERENCE CASE, ALL REGULATORY CLASSES AND ALL FUELS, MILLIONS OF 2021 DOLLARS [a]

Calendar year	Direct manufacturing costs	Indirect costs	Total technology package costs
2027	$1,400	$590	$2,000
2028	1,200	520	1,800
2029	1,200	500	1,700
2030	1,400	590	2,000
2031	1,600	680	2,300
2032	1,400	600	2,000
2033	1,100	440	1,500
2034	900	380	1,300
2035	710	300	1,000
2036	530	220	750
2037	440	180	620
2038	290	120	410
2039	160	66	220
2040	95	40	140
2041	−29	−12	−40
2042	−140	−60	−200
2043	−250	−110	−360
2044	−290	−120	−410
2045	−390	−160	−550
2046	−490	−200	−690
2047	−580	−240	−820
2048	−600	−250	−850
2049	−680	−290	−970
2050	−760	−320	−1,100
2051	−770	−320	−1,100
2052	−850	−360	−1,200
2053	−930	−390	−1,300
2054	−1,000	−420	−1,400
2055	−1,100	−450	−1,500
PV, 3%	6,300	2,700	9,000
PV, 7%	7,100	3,000	10,000

[a] Values show 2 significant digits; negative values denote lower costs, *i.e.,* savings in expenditures.

2. Total EVSE RPE

Building on the analysis presented in Section IV.D.3 that discusses EVSE RPE cost per vehicle, the annual EVSE RPE was estimated by multiplying EVSE RPE on a per vehicle basis by the modeled number of BEV sales in MOVES. Table IV–15 shows the undiscounted annual EVSE RPE cost for the proposal relative to the reference case. The number of EVSE are expected to increase over time for the proposal relative to the reference case. This is due to the expected increase in BEVs requiring EVSE. Thus, the proposal shows increased EVSE cost over time.

TABLE IV–15—TOTAL EVSE RPE COST IMPACTS OF THE PROPOSED OPTION RELATIVE TO THE REFERENCE CASE, ALL REGULATORY CLASSES AND ALL FUELS, MILLIONS OF 2021 DOLLARS [a]

Calendar year	Total EVSE RPE cost impacts
2027	$1,300
2028	1,600
2029	1,900
2030	2,000
2031	2,200
2032	2,600
2033	2,600
2034	2,600
2035	2,500
2036	2,500
2037	2,500
2038	2,500
2039	2,600
2040	2,600
2041	2,600
2042	2,600
2043	2,700
2044	2,700
2045	2,700

TABLE IV–15—TOTAL EVSE RPE COST IMPACTS OF THE PROPOSED OPTION RELATIVE TO THE REFERENCE CASE, ALL REGULATORY CLASSES AND ALL FUELS, MILLIONS OF 2021 DOLLARS [a]—Continued

Calendar year	Total EVSE RPE cost impacts
2046	2,700
2047	2,700
2048	2,700
2049	2,800
2050	2,800
2051	2,800
2052	2,900
2053	2,900
2054	2,900
2055	2,900
PV, 3%	47,000
PV, 7%	29,000

3. Total Operating Costs

Annual fuel costs across the national fleet for each fuel type were computed for the proposal and reference cases by multiplying the amount of fuel

consumed for each vehicle modeled in MOVES by the cost of each fuel type. Table IV–16 shows the undiscounted annual fuel savings for the proposal relative to the reference case for each fuel type. Using projected fuel prices from AEO and the estimated hydrogen prices as discussed in Section IV.D.5.i, the total, national fleet-wide cost of electricity and hydrogen consumption increase over time while the costs for diesel, gasoline, and CNG consumption decrease over time, as shown on an annual basis in Table IV–17. This is due to the expected increase in BEVs and FCEVs resulting in fewer diesel, gasoline, and CNG vehicles in the proposed case compared to the reference case. The net effect of the proposal shows increased operating cost savings over time.

TABLE IV–16—ANNUAL UNDISCOUNTED PRE-TAX FUEL COSTS FOR THE PROPOSAL RELATIVE TO THE REFERENCE CASE, MILLIONS OF 2021 DOLLARS [a]

Calendar year	Diesel	Gasoline	CNG	Electricity	Hydrogen	Sum
2027	−$370	−$160	−$4	$390	$0	−$150
2028	−810	−360	−8	840	0	−340
2029	−1,300	−590	−12	1,400	0	−580
2030	−2,300	−870	−24	1,900	520	−710
2031	−3,800	−1,200	−39	2,500	1,700	−710
2032	−5,600	−1,600	−59	3,200	3,300	−710
2033	−7,400	−2,100	−78	3,900	4,900	−680
2034	−9,100	−2,500	−97	4,600	6,500	−630
2035	−11,000	−2,900	−120	5,200	8,100	−610
2036	−12,000	−3,300	−130	5,700	9,600	−640
2037	−14,000	−3,800	−150	6,200	11,000	−710
2038	−15,000	−4,200	−170	6,600	12,000	−810
2039	−17,000	−4,600	−190	7,100	14,000	−780
2040	−18,000	−5,000	−220	7,500	15,000	−940
2041	−19,000	−5,400	−240	7,800	16,000	−1,100
2042	−20,000	−5,800	−260	8,200	17,000	−1,100
2043	−21,000	−6,200	−290	8,500	18,000	−1,400
2044	−22,000	−6,600	−320	8,700	19,000	−1,900
2045	−23,000	−7,000	−350	8,900	19,000	−2,200
2046	−24,000	−7,400	−380	9,200	20,000	−2,600
2047	−24,000	−7,800	−410	9,300	20,000	−2,800
2048	−25,000	−8,000	−440	9,500	21,000	−2,900
2049	−25,000	−8,400	−480	9,700	21,000	−3,000
2050	−25,000	−8,700	−520	9,800	21,000	−3,200
2051	−26,000	−9,100	−570	10,000	22,000	−3,400
2052	−26,000	−9,400	−610	10,000	22,000	−3,600
2053	−26,000	−9,700	−670	10,000	22,000	−3,800
2054	−26,000	−10,000	−720	10,000	23,000	−4,000
2055	−26,000	−10,000	−780	10,000	23,000	−4,300

[a] Values rounded to two significant digits; negative values denote lower costs, *i.e.,* savings in expenditures.

Annual DEF costs for diesel vehicles were computed for the proposal and reference cases by multiplying the modeled amount of DEF consumed by the cost DEF. Table IV–17 shows the annual savings associated with less DEF consumption in the proposal relative to the reference case; note that non-diesel vehicles are shown for completeness with no savings since those vehicles do not consume DEF.

TABLE IV–17—ANNUAL UNDISCOUNTED DEF COSTS FOR THE PROPOSAL RELATIVE TO THE REFERENCE CASE, MILLIONS OF 2021 DOLLARS [a]

Calendar year	Diesel	Gasoline, CNG, electric, hydrogen vehicles	Sum
2027	−$27	$0	−$27
2028	−58	0	−58
2029	−97	0	−97
2030	−160	0	−160
2031	−270	0	−270
2032	−410	0	−410
2033	−540	0	−540
2034	−680	0	−680
2035	−810	0	−810
2036	−930	0	−930
2037	−1,100	0	−1,100
2038	−1,200	0	−1,200
2039	−1,300	0	−1,300
2040	−1,400	0	−1,400
2041	−1,500	0	−1,500

TABLE IV–17—ANNUAL UNDISCOUNTED DEF COSTS FOR THE PROPOSAL RELATIVE TO THE REFERENCE CASE, MILLIONS OF 2021 DOLLARS [a]—Continued

Calendar year	Diesel	Gasoline, CNG, electric, hydrogen vehicles	Sum
2042	−1,600	0	−1,600
2043	−1,700	0	−1,700
2044	−1,700	0	−1,700
2045	−1,800	0	−1,800
2046	−1,900	0	−1,900
2047	−1,900	0	−1,900
2048	−2,000	0	−2,000
2049	−2,000	0	−2,000
2050	−2,100	0	−2,100
2051	−2,100	0	−2,100
2052	−2,200	0	−2,200
2053	−2,200	0	−2,200
2054	−2,300	0	−2,300
2055	−2,300	0	−2,300

[a] Values rounded to two significant digits; negative values denote lower costs, *i.e.,* savings in expenditures.

Annual maintenance and repair costs were computed on an annual basis for all vehicles modeled in MOVES based on the total annual VMT, vehicle type and vehicle age as discussed in Section 5 and DRIA Chapter 2 and 3. Table IV–18 presents the maintenance and repair costs associated with the proposal. The maintenance and repair costs are attributable to changes in new BEV, FCEV, and ICE vehicle sales and populations. EPA has not projected any changes to the maintenance and repair costs on a per mile basis for each vehicle powertrain type between the proposal and reference case, but as more HD ZEVs enter the HD fleet, the total maintenance and repair costs for the fleet of those vehicles correspondingly increases. The opposite is true for diesel, gasoline, and CNG vehicles as there become fewer of these vehicles in the fleet such that the total maintenance and repair costs for the fleet of those vehicles decreases as more HD ZEVs enter the HD fleet.

TABLE IV–18—ANNUAL UNDISCOUNTED MAINTENANCE & REPAIR COSTS FOR THE PROPOSAL RELATIVE TO THE REFERENCE CASE, MILLIONS OF 2021 DOLLARS [a]

Calendar year	Diesel	Gasoline	CNG	Electricity	Hydrogen	Sum
2027	−$370	−$150	−$3	$380	$0	−$150
2028	−940	−400	−7	950	0	−390
2029	−1,700	−740	−12	1,800	0	−720
2030	−2,900	−1,200	−22	2,800	140	−1,200
2031	−4,700	−1,800	−36	4,100	530	−1,900
2032	−7,000	−2,600	−56	5,700	1,100	−2,700
2033	−9,600	−3,400	−78	7,500	1,900	−3,700
2034	−12,000	−4,400	−100	9,500	2,700	−4,800
2035	−15,000	−5,500	−130	11,000	3,700	−5,900
2036	−19,000	−6,700	−160	14,000	4,800	−7,100
2037	−22,000	−7,900	−190	16,000	5,800	−8,400
2038	−25,000	−9,100	−220	18,000	6,900	−9,600
2039	−28,000	−10,000	−260	20,000	8,100	−11,000
2040	−31,000	−12,000	−300	22,000	9,200	−12,000
2041	−34,000	−13,000	−330	24,000	10,000	−13,000
2042	−37,000	−14,000	−380	26,000	11,000	−14,000
2043	−39,000	−15,000	−420	27,000	12,000	−15,000
2044	−41,000	−17,000	−460	29,000	13,000	−16,000
2045	−43,000	−18,000	−510	31,000	14,000	−17,000
2046	−45,000	−19,000	−560	32,000	15,000	−18,000
2047	−47,000	−20,000	−620	34,000	15,000	−19,000
2048	−48,000	−21,000	−670	35,000	16,000	−19,000
2049	−49,000	−22,000	−740	36,000	16,000	−20,000
2050	−51,000	−24,000	−800	38,000	17,000	−21,000
2051	−52,000	−25,000	−880	39,000	17,000	−22,000
2052	−53,000	−26,000	−960	40,000	17,000	−22,000
2053	−54,000	−27,000	−1,000	42,000	18,000	−23,000
2054	−55,000	−28,000	−1,100	43,000	18,000	−24,000
2055	−56,000	−30,000	−1,200	44,000	19,000	−24,000

[a] Values rounded to two significant digits; negative values denote lower costs, *i.e.,* savings in expenditures.

4. Total Social Costs

Adding together the cost elements outlined in Sections IV.E.1, IV.E.2, and IV.E.30, we estimated the total social costs associated with the proposed CO_2 standards; these total social costs associated with the proposal relative to the reference case are shown in Table IV–19. Table IV–19 presents costs in 2021 dollars in undiscounted annual values along with net present values at both 3- and 7-percent discount rates with values discounted to the 2027 calendar year. Additionally, neither the battery tax credit nor the vehicle tax credit is included in the social costs analysis discussed in this subsection.

As shown in Table IV–19, starting in 2033, our analysis demonstrates that total program costs under the proposal scenario are lower than the total program costs under the reference case without the standard.

TABLE IV–19—TOTAL TECHNOLOGY PACKAGE, OPERATING COST, AND EVSE COST IMPACTS OF THE PROPOSED OPTION RELATIVE TO THE REFERENCE CASE, ALL REGULATORY CLASSES AND ALL FUELS, MILLIONS OF 2021 DOLLARS [a]

Calendar year	Total technology package costs	Total operating costs	Total EVSE costs	Sum
2027	$2,000	−$330	$1,300	$3,000
2028	1,800	−790	1,600	2,500
2029	1,700	−1,400	1,900	2,200
2030	2,000	−2,100	2,000	1,900
2031	2,300	−2,800	2,200	1,700
2032	2,000	−3,800	2,600	860
2033	1,500	−4,900	2,600	−820
2034	1,300	−6,100	2,600	−2,200
2035	1,000	−7,400	2,500	−3,800
2036	750	−8,700	2,500	−5,500
2037	620	−10,000	2,500	−7,000
2038	410	−12,000	2,500	−8,700
2039	220	−13,000	2,600	−10,000
2040	140	−14,000	2,600	−12,000
2041	−40	−16,000	2,600	−13,000
2042	−200	−17,000	2,600	−15,000
2043	−360	−18,000	2,700	−16,000
2044	−410	−20,000	2,700	−18,000
2045	−550	−21,000	2,700	−19,000
2046	−690	−22,000	2,700	−20,000
2047	−820	−23,000	2,700	−22,000
2048	−850	−24,000	2,700	−22,000
2049	−970	−25,000	2,800	−23,000
2050	−1,100	−26,000	2,800	−24,000
2051	−1,100	−27,000	2,800	−25,000
2052	−1,200	−28,000	2,900	−26,000
2053	−1,300	−29,000	2,900	−27,000
2054	−1,400	−30,000	2,900	−28,000
2055	−1,500	−31,000	2,900	−29,000
PV, 3%	9,000	−250,000	47,000	−190,000
PV, 7%	10,000	−120,000	29,000	−85,000
Annualized, 3%	470	−13,000	2,500	−10,000
Annualized, 7%	820	−10,000	2,300	−6,900

[a] Values rounded to two significant digits; negative values denote lower costs, *i.e.,* savings in expenditures.

V. Estimated Emission Impacts From the Proposed Program

We expect the proposed CO_2 standards would result in downstream emission reductions of GHGs from heavy-duty vehicles. Downstream emissions processes are those that come directly from a vehicle, such as tailpipe exhaust, crankcase exhaust, evaporative emissions, and refueling emissions. While we are not proposing standards to address criteria pollutants or air toxics, we expect the proposed standards would also result in reductions of downstream emissions of both criteria pollutants and air toxics. We expect these anticipated emission reductions would be achieved through increased adoption of heavy-duty battery electric vehicles (BEVs) and fuel cell electric vehicles (FCEVs) and by additional improvements to ICE vehicles. The emissions modeling that we present in this section characterizes the emissions impacts of the technology package described in Section II of the preamble. As we note there, manufacturers may elect to comply using a different combination of HD vehicle and engine technologies than we modeled.

To estimate the downstream emission reductions from the proposed standards, we used an updated version of EPA's Motor Vehicle Emission Simulator (MOVES) model, MOVES3.R3. This version already included the impacts of the HD GHG Phase 2 program, and also includes several changes related specifically to heavy-duty vehicle emissions (*e.g.,* updates to incorporate the HD2027 final rule) and activity (*e.g.,* updates to vehicle population and miles traveled) as well as new capabilities to model heavy-duty vehicles with electric powertrains.[651] These model updates are summarized in Chapter 4.2 of the DRIA and described in detail in the technical reports that are available in the docket for this proposed rulemaking.

With the increased adoption of heavy-duty BEVs and FCEVs (together referred to as ZEVs), we expect the proposed standards to impact upstream emissions of GHGs and other pollutants. Upstream emissions sources are those that occur

[651] Memo to Docket. ''EPA's Motor Vehicle Emission Simulator (MOVES) model, MOVES3.R3.'' Docket EPA–HQ–OAR–2022–0985.

before tailpipe emissions from vehicles, such as from electricity generation for charging BEVs, the production of hydrogen used to fuel FCEVs, and emissions generated during petroleum-based fuel production and distribution. We estimated the impacts of the proposed standards on emissions from electricity generation units (EGUs). We also estimated the impacts on refinery emissions of non-GHGs for calendar year 2055.[652] We did not estimate the impacts on emissions related to crude production or extraction or the transportation of crude or refined fuels.

To estimate upstream EGU emission impacts from the proposed standards, we used the Integrated Planning Model (IPM). IPM is a linear programming model that accounts for variables and information such as energy demand, planned EGU retirements, and planned rules to forecast EGU-level energy production and configurations. The IPM runs we performed to estimate EGU emissions were based on preliminary reference and control scenarios, and the IPM run for the control scenario did not account for the IRA. Therefore, we developed a methodology, using output of three IPM runs, to estimate the increase in EGU emissions from the proposal and alternative, adjusted for the IRA. The first represents the EGU inventory absent both the proposal and the Inflation Reduction Act (IRA),[653] the second represents the inventory absent the proposal but includes the IRA,[654] and the third includes impacts from a preliminary version of the proposal we developed earlier in the regulatory development process but not the IRA. Together, they help us estimate the impact of the proposed standards on EGU emissions, accounting for the IRA. More details on IPM and the specific version used in this proposal can be found in the Chapter 4.3.3 of the DRIA.

To estimate upstream refinery impacts from the proposed standards, we adjusted an existing refinery inventory that included $PM_{2.5}$, NO_X, SO_2 and VOC emissions for the year 2055. The adjustment factors are based on liquid fuel demand projections for the reference, proposal, and alternative cases. In this analysis, we assumed refinery activity decreases with decreased demand for liquid fuel from heavy-duty vehicles. More details on the refinery impacts estimated for this proposal can be found in Chapters 4.3.3 and 4.6 of the DRIA.

A. Model Inputs

1. MOVES Inputs

In the analysis to support this proposal, we evaluated the proposed standards relative to a reference case using MOVES. MOVES defines vehicles using a combination of source type and regulatory class, where source type roughly defines a vehicle's vocation or usage pattern, and regulatory class defines a vehicle's weight class. Table V–1 defines MOVES medium- and heavy-duty source types.

TABLE V–1—MOVES SOURCE TYPE DEFINITIONS

sourceTypeID	Source type description
31	Passenger Truck.
32	Light Commercial Truck.
41	Other Bus.
42	Transit Bus.
43	School Bus.
51	Refuse Truck.
52	Single Unit Short-haul Truck.
53	Single Unit Long-haul Truck.
54	Motor Home.
61	Combination Short-haul Truck.
62	Combination Long-haul Truck.

In modeling the heavy-duty ZEV populations in the reference case, a scenario that represents the United States without the proposed rulemaking, we considered several different factors related to purchaser acceptance of new technologies as discussed in DRIA Chapter 2, along with three factors described in Section I.C. First, the market has evolved such that early HD ZEV models are in use today for some applications and HD ZEVs are expected to expand to many more applications, as discussed in Section II.D and DRIA Chapters 1.5 and 2. Additionally, manufacturers have announced plans to rapidly increase their investments in ZEV technologies over the next decade. Second, the IRA and the BIL provide many monetary incentives for the production and purchase of ZEVs in the heavy-duty market, as well as incentives for electric vehicle charging infrastructure. Third, there have been multiple actions by states to accelerate the adoption of heavy-duty ZEVs, such as (1) a multi-state Memorandum of Understanding for the support of heavy-duty ZEV adoption;[655] and (2) the State of California's ACT program, which has also been adopted by other states and includes a manufacturer requirement for zero-emission truck sales.[656] [657]

We also reviewed the literature to evaluate future HD ZEV projections from others. We found that the literature had varied projections for HD ZEV adoption absent this proposed rulemaking. For instance, the International Council for Clean Transportation (ICCT) conducted an analysis in early 2022, before IRA, and projected a variety of scenarios. They specifically projected eight percent HD ZEV sales in 2030 when only considering current policies and 11 percent in 2030 when considering the multi-state MOUs.[658] The National Renewable Energy Laboratory (NREL) conducted an analysis in early 2022, also prior to the IRA, that projected 42 percent HD ZEV sales by 2030 and 98 percent sales by 2040, along with 100 percent of bus sales being ZEVs by 2030.[659] The NREL analysis assumed economics alone drive adoption (*i.e.,* total cost of ownership), and therefore they did not consider non-financial factors such ZEV product research and development timelines, ZEV manufacturing time lines, the availability of ZEV models, manufacturing or infrastructure constraints, driver preferences, and

[652] As discussed in Chapter 4.3.3.3 of the DRIA, our methodology for estimating refinery emissions is limited to one analysis year (2055) and only certain non-GHG pollutants (NO_X, $PM_{2.5}$, VOC, and SO_2).

[653] All inputs, outputs, and full documentation of EPA's IPM v6 Summer 2022 Reference Case and the associated NEEDS version is available on the power sector modeling website (*https://www.epa.gov/power-sector-modeling/documentation-pre-ira-2022-reference-case*).

[654] We expect IRA incentives, particularly sections 45X, 45Y, and 48E of the Internal Revenue Code (*i.e.,* Title 26) added by sections 13502 (Advanced Manufacturing Production Credit), 13701 (Clean Electricity Production Credit), and 13702 (Clean Electricity Investment Credit), respectively, to contribute significantly to increases in renewables in the future power generation mix.

[655] NESCAUM MOU, available at *https://www.nescaum.org/documents/mhdv-zev-mou-20220329.pdf.*

[656] EPA granted the ACT rule waiver requested by California under CAA section 209(b) on March 30, 2023. When we developed the reference case, the ACT had been adopted by five states under CAA section 177: Oregon, Washington, New York, New Jersey, and Massachusetts. Oregon and Washington adopted ACT as-is, whereas New York, New Jersey, and Massachusetts adopted ACT on a one-year delay.

[657] In December 2022, Vermont also adopted ACT under CAA section 177 effective beginning with MY 2026. Due to the timing of Vermont's adoption of ACT relative to the timing of the analysis conducted for this proposal, Vermont's adoption of ACT is not included in the analysis for our proposal; however, Vermont's adoption of ACT provides additional support for the ZEV levels in our reference case. See *https://dec.vermont.gov/sites/dec/files/aqc/laws-regs/documents/Chapter_40_LEV_ZEV_rule_adoped.pdf.*

[658] Buysee, Claire, et al. ''Racing to Zero: The Ambition We Need for Zero-Emission Heavy-Duty Vehicles in the United States.'' April 2022. Available online: *https://theicct.org/racing-to-zero-hdv-us-apr22/* ICCT.

[659] Ledna, Catherine, et al. ''Decarbonizing Medium- & Heavy-Duty On-Road Vehicles: Zero-Emission Vehicles Cost Analysis.'' March 2022. Slide 25. Available online: *https://www.nrel.gov/docs/fy22osti/82081.pdf.*

other factors. ACT Research also conducted an analysis prior to IRA and projected HD ZEV sales of 24 pecent in 2024, 26 percent in 2030, and 34 percent in 2031.[660] EDF and ERM conducted a follow-up analysis of their HD ZEV sales projections after the IRA passed in 2022.[661] They project several scenarios which range between 11 and 42 percent HD ZEV sales in 2029 when including long-haul tractors. The EDF/ERM analysis found that IRA will help accelerate ZEV adoption due to the purchasing incentives, which drives HD ZEVs to reach cost parity at least five years sooner than without the IRA incentives. The ACT Research, ICCT, and EDF/ERM projections, similar to the 2022 NREL study, also did not consider several important real-world factors which would in general be expected to slow down or reduce ZEV sales.

To estimate the adoption of HD ZEVs in the reference case for this proposal, we analyzed a national level of ZEV sales based on volumes expected from the ACT rule in California and other states that have adopted ACT.[662] [663] We used those volumes as the numeric basis for the number of ZEVs in the MY 2024 and later timeframe. EPA granted the ACT rule waiver requested by California under CAA section 209(b) on March 30, 2023, and we expect the market, at a national level, had already been responding to the ACT requirements, in addition to the market forces discussed earlier. It is, therefore, reasonable to use the ZEV sales volume that could be expected from ACT in the reference case as an overall projection for where the national ZEV sales volumes may be in the absence of this EPA action. Table V–2 shows the national adoption of heavy-duty ZEVs we modeled in the reference case. Additional details regarding the modeling of the reference case can be found in Chapter 4.3 of the DRIA.

TABLE V–2—NATIONAL HEAVY-DUTY ZEV ADOPTION IN THE REFERENCE CASE

Model year	Class 4–8 vocational vehicle group [a] source types 41–54 (percent)	Class 7–8 tractors group source types 61, 62 (percent)
2024	1.1	0.3
2025	2.0	0.7
2026	2.4	1.0
2027	3.4	1.4
2028	5.1	1.9
2029	7.1	2.5
2030	9.1	3.0
2031	10.5	3.5
2032	11.4	4.1
2033	12.4	4.3
2034	13.4	4.3
2035	14.4	4.3
2036 and beyond	14.8	4.3

[a] The ACT program includes ZEV adoption rates for a Class 2b–3 Vocational Vehicle Group, which we also included in our reference case modeling. However, we did not model the proposal as increasing ZEV adoption in this vehicle category so they are not presented here. Class 2b–3 Vocational Vehicle Group ZEV adoption rates can be found in Appendix 4A of the DRIA.

We note that our reference case projection of ZEV adoption in this proposal is conservative when compared to the studies from NREL, ICCT, ACT Research, and EDF/ERM. Therefore, we may be projecting emission reductions due to the proposed standards that are greater than could be expected using a reference case that reflects higher levels of ZEV adoption in the HD market absent our rule. At the same time, our use of this reference case would also be conservative in terms of costs of compliance, which would be overestimated if the market would acheive higher levels of ZEV adoption in the absence of our proposed standards. We may revisit our reference case in the final rule analysis. For example, given that EPA granted the California Air Resources Board's request for a waiver for the ACT Regulation on March 30, 2023, which was not in a time frame for EPA to consider for this proposal an alternative approach for the reference case, we may make revisions for the final rule to explicitly reflect the waiver decision. In addition, while the approach we have used to quantify the national ZEV volumes in the reference case considers the impacts of the IRA and the BIL, it does not explicitly model them. Therefore, we invite stakeholders to comment and provide additional information on our approach to modeling the reference case. Commenters may also provide input on other data or modeling approaches that EPA should consider when estimating the reference case in the final rulemaking, including but not limited to the reports summarized in this section. We invite stakeholders to comment and provide additional information on our approach to modeling the reference case. Commenters may also provide input on other data or modeling approaches that EPA should consider when estimating the reference case in the final rulemaking, including but not limited to the reports summarized in this section.

For the purposes of the modeling analysis, we assume the proposed CO_2 emission standards would be met by technology packages that reflect both ICE vehicles and an increased level of ZEV adoption. The technology packages we are using for the ICE vehicles are built into the MOVES versions we are using for the analysis. Future HD ZEV populations in MOVES for the proposal and alternative scenarios were estimated using HD TRUCS based on the technology assessment for BEVs and FCEVs discussed in DRIA Chapter 2. Table V–3 shows the ZEV adoption rates by vehicle type used in modeling the control case for the proposal in MOVES. ZEV adoption rates for the alternative are discussed in Section IX. Further discussion of the ZEV adoption rates we modeled can be found in DRIA Chapter 4.3.

[660] Lockridge, Deborah. ''ACT: Third of Class 4–8 Vehicles to be Battery-Electric in 10 Years.'' June 2021. Available online: *https://www.truckinginfo.com/10144947/act-third-of-class-4-8-vehicles-to-be-battery-electric-in-10-years.*

[661] Robo, Ellen and Dave Seamonds. Technical Memo to Environmental Defense Fund: Investment Reduction Act Supplemental Assessment: Analysis of Alternative Medium- and Heavy-Duty Zero-Emission Vehicle Business-As-Usual Scenarios. ERM. August 19, 2022. Page 9. Available online: *https://www.erm.com/contentassets/154d08e0d0674752925cd82c66b3e2b1/edf-zev-baseline-technical-memo-addendum.pdf.*

[662] California Air Resources Board, Final Regulation Order—Advanced Clean Trucks Regulation. Filed March 15, 2021. Available at: *https://ww2.arb.ca.gov/sites/default/files/barcu/regact/2019/act2019/fro2.pdf.* Final Advanced Clean Truck Amendments, Oregon adopted ACT on 11/17/2021: *https://www.oregon.gov/deq/rulemaking/Pages/ctr2021.aspx.* Washington adopted ACT on 11/29/2021: *https://ecology.wa.gov/Regulations-Permits/Laws-rules-rulemaking/Rulemaking/WAC-173-423-400.* New York adopted ACT on 12/29/2021: *https://www.dec.ny.gov/regulations/26402.html.* New Jersey adopted ACT on 12/20/2021: *https://www.nj.gov/dep/rules/adoptions.html.* Massachusetts adopted ACT on 12/30/2021: *https://www.mass.gov/regulations/310-CMR-700-air-pollution-control#proposed-amendments-public-comment.*

[663] In December 2022, Vermont also adopted ACT under CAA section 177 effective beginning with MY 2026. Due to the timing of Vermont's adoption of ACT relative to the timing of the analysis conducted for this proposal, Vermont's adoption of ACT is not included in the analysis for our proposal; however, Vermont's adoption of ACT provides additional support for the ZEV levels in our reference case. See *https://dec.vermont.gov/sites/dec/files/aqc/laws-regs/documents/Chapter_40_LEV_ZEV_rule_adopted.pdf.*

TABLE V–3—HD ZEV ADOPTION RATES IN THE CONTROL CASE USED TO MODEL THE PROPOSED STANDARDS

Model year	Vocational source types 41–54 (percent)	Short-haul tractors source type 61 (percent)	Long-haul tractors [a] source Type 62 (percent)
MY 2027	20	10	0.3
MY 2028	25	12	0.7
MY 2029	30	15	1.0
MY 2030	35	20	10
MY 2031	40	30	20
MY 2032 and later	50	35	25

[a] For sleeper cab tractors, which are represented by long-haul tractors (source type 62) in MOVES, we are not proposing revisions to MY 2027 standards or new standards for MYs 2028 or 2029. ZEV adoption for this source type in these model years was set to be equal to the reference case.

2. IPM Inputs

We used IPM to estimate the EGU emissions associated with the additional energy demand from increased HD ZEV adoption. We do not have IPM output from runs directly corresponding to the reference case and proposal, so we approximated the EGU emission impacts of the proposal based on IPM runs that did not specifically model that scenario. The details of this methodology, including its simplifying assumptions and limitations, can be found in Chapter 4.3.3 of the draft RIA.

To account for the upstream emissions from the production of hydrogen used to fuel FCEVs, we made a simplifying assumption that all hydrogen used for FCEVs is produced via grid electrolysis of water and can therefore be entirely represented as additional demand to EGUs and modeled using IPM.[664] We developed a scaling factor to account for the amount of hydrogen that would need to be produced to meet the FCEV energy demand calculated by MOVES. More details on the derivation of the scaling factors can be found in Chapter 4.3 of the draft RIA. We invite stakeholders to comment and provide additional information on our approach to modeling the emissions impact of hydrogen production. Commenters may also provide input on other data or modeling approaches that EPA should consider when estimating emissions from hydrogen production in the final rulemaking.

B. Estimated Emission Impacts From the Proposed Standards

This NPRM includes proposed CO_2 emission standards for MYs 2027 through 2032. Because we anticipate an increase in the use of heavy-duty ZEVs to meet the proposed emission standards, and ZEVs do not produce any tailpipe emissions, we expect downstream GHG emissions reductions as well as reductions in emissions of criteria pollutants and air toxics. As described in Section V.A, we modeled the proposed standards in MOVES3.R3 by increasing the adoption of heavy-duty BEVs and FCEVs relative to the reference case, which means the primary driving factor behind the projected emission reductions is the displacement of ICE vehicles with ZEVs. The downstream emissions are presented in Section V.B.1.

We also expect the increased adoption of HD ZEVs to increase emissions from EGUs and decrease emissions from refineries. Section V.B.2 presents these upstream emissions impacts, Section V.B.3 presents the net emission impacts of the proposed standards, and the downstream and upstream impacts of the alternative are discussed in Section IX.

Because all our modeling is done for a full national domain, all emissions impacts cover the full national inventory. Emissions impacts in other domains, such as particular regions or localities in the United States, are likely to differ from the impacts presented here.

1. Estimated Impacts on Downstream Emissions

Our estimates of the downstream emission reductions of GHGs that would result from the proposed standards, relative to the reference case emission inventory without the proposed standards, are presented in Table V–4 for calendar years 2035, 2045, and 2055. Total GHG emissions, or CO_2 equivalent (CO_2e), are calculated by summing all GHG emissions multiplied by their 100-year Global Warming Potentials (GWP).[665]

TABLE V–4—ANNUAL DOWNSTREAM HEAVY-DUTY GHG EMISSION REDUCTIONS FROM THE PROPOSED STANDARDS IN CALENDAR YEARS (CY) 2035, 2045, AND 2055

Pollutant	100-year GWP	CY 2035 reductions		CY 2045 reductions		CY 2055 reductions	
		Million metric tons	Percent	Million metric tons	Percent	Million metric tons	Percent
Carbon Dioxide (CO_2)	1	51	13	102	26	125	30

[664] Hydrogen in the U.S. today is primarily produced via steam methane reforming (SMR) largely as part of petroleum refining and ammonia production. Given the BIL and the IRA provisions that meaningfully incentivize reducing the emissions and carbon intensity of hydrogen production, as well as new transportation and other demand drivers and potential future regulation, it is anticipated there will be a shift in how hydrogen is produced. Considering this and because electrolysis is a key mature technology for hydrogen production, our analysis includes the simplifying assumption that increased levels of hydrogen to fuel FCEVs will be produced using grid electrolysis. We recognize that the relative emissions impact of hydrogen production via SMR versus grid electrolysis depends on how electricity is produced, which varies significantly by region across the country. We also recognize that electrolysis powered by electricity from the grid on average in the U.S. may overestimate the upstream emissions impacts that are attributable to HD FCEVs in our analysis. See DRIA Chapter 4.3.3 for additional discussion.

[665] The GWP values used by MOVES are values used in the 2007 IPCC Fourth Assessment Report (AR4). The Intergovernmental Panel on Climate Change, *Climate Change 2007: Impacts, Adaptation and Vulnerability. https://www.ipcc.ch/site/assets/uploads/2018/03/ar4_wg2_full_report.pdf.*

TABLE V–4—ANNUAL DOWNSTREAM HEAVY-DUTY GHG EMISSION REDUCTIONS FROM THE PROPOSED STANDARDS IN CALENDAR YEARS (CY) 2035, 2045, AND 2055—Continued

Pollutant	100-year GWP	CY 2035 reductions		CY 2045 reductions		CY 2055 reductions	
		Million metric tons	Percent	Million metric tons	Percent	Million metric tons	Percent
Methane (CH_4)	25	0.004	8	0.015	24	0.032	31
Nitrous Oxide (N_2O)	298	0.007	12	0.013	24	0.015	28
CO_2 Equivalent (CO_2e)		53	13	106	26	130	30

In 2055, we estimate that the proposal would reduce downstream emissions of CO_2 by 30 percent, methane by 31 percent, and nitrous oxide by 28 percent, resulting in a reduction of 30 percent for total CO_2 equivalent emissions. Table V–4 also shows that most of the GHG emission reductions would be from CO_2, which would represent approximately 96 percent of all heavy-duty GHG emission reductions from the proposed standards.

The warming impacts of GHGs are cumulative. Table V–5 presents the cumulative GHG reductions that would result from the proposed standards in 2055, in billion metric tons (BMT).

TABLE V–5—CUMULATIVE 2027–2055 DOWNSTREAM HEAVY-DUTY GHG EMISSION REDUCTIONS FROM THE PROPOSED STANDARDS

Pollutant	Reduction in BMT	Percent reduction
Carbon Dioxide (CO_2)	2.2	18
Methane (CH_4)	0.00035	17
Nitrous Oxide (N_2O)	0.00028	17
CO_2 Equivalent (CO_2e)	2.3	18

Cumulative emission reductions increase over time from 2027 through 2055, as more HD ZEVs meeting the proposed standards enter the fleet. This is discussed in more detail in Chapter 4.4.3 of the draft RIA.

We expect the proposed CO_2 emission standards will lead to an increase in HD ZEVs, which will result in reductions of non-GHG pollutants. Table V–6 presents our estimates of the downstream emission reductions of criteria pollutants and air toxics from heavy-duty vehicles that would result from the proposed standards in calendar years 2035, 2045, and 2055.

TABLE V–6—ANNUAL DOWNSTREAM HEAVY-DUTY EMISSION REDUCTIONS FROM THE PROPOSED STANDARDS IN CALENDAR YEARS (CY) 2035, 2045, AND 2055 FOR CRITERIA POLLUTANTS AND AIR TOXICS

Pollutant	CY 2035 reductions		CY 2045 reductions		CY 2055 reductions	
	U.S. Tons	Percent	U.S. Tons	Percent	U.S. Tons	Percent
Nitrogen Oxides (NO_X)	16,232	4	56,191	21	70,838	28
Primary Exhaust $PM_{2.5}$	271	6	690	30	967	39
Volatile Organic Compounds (VOC)	6,016	11	14,219	28	20,775	37
Sulfur Dioxide (SO_2)	204	13	414	27	518	31
Carbon Monoxide (CO)	98,889	11	244,649	28	349,704	35
1,3-Butadiene	19	22	48	46	68	51
Acetaldehyde	123	11	298	30	454	35
Benzene	109	17	281	41	410	49
Formaldehyde	83	8	217	27	361	33
Naphthalenea	6	10	16	38	21	45
Ethylbenzene	70	11	175	30	266	41

[a] Naphthalene includes both gas and particle phase emissions.

In 2055, we estimate the proposal would reduce heavy-duty vehicle emissions of NO_X by 28 percent, $PM_{2.5}$ by 39 percent, VOC by 37 percent, and SO_2 by 31 percent. Reductions in air toxics range from 33 percent for formaldehyde to 51 percent for 1,3-butadiene.

Chapter 4.4 of the draft RIA contains more details on downstream emission reductions by vehicle type, fuel type, and emission process, as well as year-over-year impacts from 2027 through 2055.

2. Estimated Impacts on Upstream Emissions

Our estimates of the additional CO_2 emissions from EGUs due to the proposed standards, relative to the reference case, are presented in Table V–7 for calendar years 2035, 2045, and 2055, in million metric tons (MMT).

TABLE V–7—ANNUAL CO_2 EMISSION INCREASES FROM EGUS FROM THE PROPOSED STANDARDS IN CALENDAR YEARS (CY) 2035, 2045, AND 2055

Pollutant	Additional EGU emissions (mmt)		
	CY 2035	CY 2045	CY 2055
Carbon Dioxide (CO_2)	20	16	11

In 2055, we estimate the proposal would increase EGU emissions of CO_2 by 11 million metric tons, compared to 20 million metric tons in 2035. The EGU impacts decrease over time because of changes in the projected power generation mix as electricity generation uses less fossil fuels. This is discussed in more detail in Chapter 4.5 of the DRIA. In total, we estimate the proposal will lead, cumulatively, to 0.4 BMT of additional CO_2 emissions from EGUs from 2027 to 2055.

Table V–8 shows the estimated impact of the proposed standards on EGU emissions for some criteria pollutants.

TABLE V–8—ANNUAL CRITERIA POLLUTANT EMISSION INCREASES FROM EGUS FROM THE PROPOSED STANDARDS IN CALENDAR YEARS (CYS) 2035, 2045, AND 2055

Pollutant	Additional EGU emissions (U.S. tons)		
	CY 2035	CY 2045	CY 2055
Nitrogen Oxides (NO_X)	2,821	2,226	787
Primary $PM_{2.5}$	1,216	1,043	751
Volatile Organic Compounds (VOC)	629	772	754
Sulfur Dioxide (SO_2)	9,937	2,552	912

Chapter 4.5 of the DRIA contains more detail and discussion of the impacts of the proposed CO_2 emission standards on EGU emissions, including year-over-year impacts from 2027 through 2055.

In addition to EGU emissions impacts, we also estimated impacts on select criteria pollutant emissions from refineries for calendar year 2055. This analysis assumes that the reduction in demand for liquid fuels would lead to reduced activity and emissions at refineries. The results are presented in Table V–9. Additional detail on the refinery analysis is available in Chapters 4.3.3 and 4.5 of the DRIA.

TABLE V–9—CRITERIA POLLUTANT EMISSION REDUCTIONS FROM REFINERIES FROM THE PROPOSED STANDARDS IN 2055

Pollutant	CY 2055 refinery emission reductions (U.S. tons)
NO_X	1,785
$PM_{2.5}$	436
VOC	1,227
SO_2	642

3. Estimated Impacts on Combined Downstream and Upstream Emissions

While we present a net emissions impact of the proposed CO_2 emission standards, it is important to note that some upstream emission sources are not included in the analysis. Although we expect the proposed CO_2 standards to reduce demand for refined fuels, we did not quantify emissions changes associated with producing or extracting crude or transporting crude or refined fuels. Also, because our analysis of refinery emissions only included select criteria pollutants, refinery emission impacts are not included in GHG emission impacts. Therefore, this analysis likely underestimates the net emissions reductions that may result from the proposal. As discussed in Section II.G, EPA considered these net impacts as supportive of the proposed standards.

Table V–10 shows a summary of our modeled downstream, upstream, and net CO_2 emission impacts of the proposed standards relative to the reference case (*i.e.,* the emissions inventory without the proposed standards), in million metric tons, for calendar years 2035, 2045, and 2055.

TABLE V–10—ANNUAL NET IMPACTS[a] ON CO_2 EMISSIONS FROM THE PROPOSED CO_2 EMISSION STANDARDS IN CALENDAR YEARS (CYS) 2035, 2045, AND 2055

Pollutant	CY 2035 impacts (MMT)			CY 2045 impacts (MMT)			CY 2055 impacts (MMT)		
	Downstream	EGU	Net	Downstream	EGU	Net	Downstream	EGU	Net
CO_2	−51	20	−31	−102	16	−86	−125	11	−114

[a] We present emissions reductions as negative numbers and emission increases as positive numbers.

In 2055, we estimate the proposal would result in a net decrease of 114 million metric tons in CO_2 emissions. The net decreases become larger between 2035 and 2055 as the HD fleet turns over and the power grid uses less fossil fuels.

The warming impacts of GHGs are cumulative. In Table V–11, we present the cumulative net CO_2 emissions impact that we expect would result from

the proposed standards, accounting for downstream emission reductions and EGU emission increases. Overall, we estimate the proposal would result in a net reduction of 1.8 billion metric tons of CO_2 emissions from 2027 to 2055.

TABLE V–11—CUMULATIVE 2027–2055 NET CO_2 EMISSION IMPACTS [a] (IN BMT) REFLECTING THE PROPOSED CO_2 EMISSION STANDARDS

Pollutant	Downstream	EGU	Net
Carbon Dioxide (CO_2)	−2.2	0.4	−1.8

[a] We present emissions reductions as negative numbers and emission increases as positive numbers.

Table V–12 contains a summary of the modeled net impacts of the proposed CO_2 emission standards on criteria pollutant emissions considering downstream and EGUs, relative to the reference case (*i.e.,* without the proposed standards), for calendar years 2035 and 2045. Table V–13 contains a similar summary for calendar year 2055 that includes estimates of net impacts of refinery, EGU, and downstream emissions.

TABLE V–12—ANNUAL NET IMPACTS [a] ON CRITERIA POLLUTANT EMISSIONS FROM THE PROPOSED CO_2 EMISSION STANDARDS IN CALENDAR YEARS (CYS) 2035 AND 2045

Pollutant	CY 2035 impacts (U.S. tons)			CY 2045 impacts (U.S. tons)		
	Downstream	EGU	Net	Downstream	EGU	Net
NO_X	−16,232	2,821	−13,411	−56,191	2,226	−53,966
$PM_{2.5}$	−271	1,216	945	−690	1,043	352
VOC	−6,016	629	−5,387	−14,219	772	−13,447
SO_2	−204	9,937	9,732	−414	2,552	2,138

[a] We present emissions reductions as negative numbers and emission increases as positive numbers.

TABLE V–13—NET IMPACTS [a] ON CRITERIA POLLUTANT EMISSIONS FROM THE PROPOSED CO_2 EMISSION STANDARDS IN CY 2055

Pollutant	CY 2055 impacts (U.S. tons)			
	Downstream	EGU	Refinery	Net
NO_X	−70,838	787	−1,785	−71,836
$PM_{2.5}$	−967	751	−436	−652
VOC	−20,775	754	−1,227	−21,248
SO_2	−518	912	−642	−248

[a] We present emissions reductions as negative numbers and emission increases as positive numbers.

By 2055, when considering downstream, EGU, and refinery emissions, we estimate a net decrease in emissions from all pollutants that we modeled for all emissions sources (*i.e.,* NO_X, $PM_{2.5}$, VOC, and SO_2). In earlier years, when considering only downstream and EGU emissions, we estimate net decreases of NO_X and VOC emissions, but net increases of $PM_{2.5}$ and SO_2 emissions. These increases become smaller over time.

Overall, we estimate that the proposal will lead to net reductions in emissions of most pollutants because downstream emission reductions tend to outpace EGU emission increases. We estimate that reductions will start small and increase from 2027 through 2055. It is possible there are increases in emissions of $PM_{2.5}$ and SO_2 in the nearer term as the electricity generation mix still relies on a relatively higher proportion of fossil fuels. While we do not have refinery emission impacts estimated for all calendar years, it is possible that refinery emission reductions combined with downstream emission reductions also outpace EGU emission increases. In 2055, for example, we estimate that refinery and downstream emission reductions exceed EGU emission increases of SO_2.

VI. Climate, Health, Air Quality, Environmental Justice, and Economic Impacts

In this section, we discuss the impacts of the NPRM on climate change, health and environmental effects, environmental justice, and oil and electricity consumption. We also discuss our approaches to analyzing the impact of this proposal on the heavy-duty vehicle market and employment.

A. Climate Change Impacts

Extensive information on climate change impacts is available in the scientific assessments that are briefly described in this section, as well as in the technical and scientific information supporting them. One of those documents is the EPA's 2009 Endangerment and Cause or Contribute Findings for GHGs Under section 202(a) of the CAA (74 FR 66496; December 15, 2009).[666] In the 2009 Endangerment Findings, the Administrator found under section 202(a) of the CAA that elevated atmospheric concentrations of six key well-mixed GHGs—CO_2, CH_4, N_2O, hydrofluorocarbons (HFCs), perfluorocarbons (PFCs), and sulfur hexafluoride (SF_6)—''may reasonably be anticipated to endanger the public health and welfare of current and future generations'' (74 FR 66523; December 15, 2009), and the science and observed changes have confirmed and strengthened the understanding and concerns regarding the climate risks considered in the Finding. The 2009 Endangerment Findings, together with

[666] In describing these 2009 Findings in this proposal, the EPA is neither reopening nor revisiting them.

the extensive scientific and technical evidence in the supporting record, documented that climate change caused by human emissions of GHGs threatens the public health of the U.S. population.

The most recent information demonstrates that the climate is continuing to change in response to the human-induced buildup of GHGs in the atmosphere. Recent scientific assessments show that atmospheric concentrations of GHGs have risen to a level that has no precedent in human history and that they continue to climb, primarily because of both historic and current anthropogenic emissions, and that these elevated concentrations endanger our health by affecting our food and water sources, the air we breathe, the weather we experience, and our interactions with the natural and built environments.

Global average temperature has increased by about 1.1 degrees Celsius (°C) (2.0 degrees Fahrenheit (°F)) in the 2011–2020 decade relative to 1850–1900.[667] The IPCC determined with medium confidence that this past decade was warmer than any multi-century period in at least the past 100,000 years.[668] Global average sea level has risen by about 8 inches (about 21 centimeters (cm)) from 1901 to 2018, with the rate from 2006 to 2018 (0.15 inches/year or 3.7 millimeters (mm)/year) almost twice the rate over the 1971 to 2006 period, and three times the rate of the 1901 to 2018 period.[669] The rate of sea level rise during the 20th Century was higher than in any other century in at least the last 2,800 years.[670] The CO_2 being absorbed by the ocean has resulted in changes in ocean chemistry due to acidification of a magnitude not seen in 65 million years,[671] putting many marine species—particularly calcifying species—at risk. Human-induced climate change has led to heatwaves and heavy precipitation becoming more frequent and more intense, along with increases in agricultural and ecological droughts[672] in many regions.[673] The NCA4 found that it is very likely (greater than 90 percent likelihood) that by mid-century, the Arctic Ocean will be almost entirely free of sea ice by late summer for the first time in about 2 million years.[674] Coral reefs will be at risk for almost complete (99 percent) losses with 1 °C (1.8 °F) of additional warming from today (2 °C or 3.6 °F since preindustrial). At this temperature, between 8 and 18 percent of animal, plant, and insect species could lose over half of the geographic area with suitable climate for their survival, and 7 to 10 percent of rangeland livestock would be projected to be lost.[675] The IPCC similarly found that climate change has caused substantial damages and increasingly irreversible losses in terrestrial, freshwater, and coastal and open ocean marine ecosystems.[676]

Scientific assessments also demonstrate that even modest additional amounts of warming may lead to a climate different from anything humans have ever experienced. Every additional increment of temperature comes with consequences. For example, the half-degree of warming from 1.5 to 2 °C (0.9 °F of warming from 2.7 °F to 3.6 °F) above preindustrial temperatures is projected on a global scale to expose 420 million more people to frequent extreme heatwaves, and 62 million more people to frequent exceptional heatwaves (where heatwaves are defined based on a heat wave magnitude index which takes into account duration and intensity—using this index, the 2003 French heat wave that led to almost 15,000 deaths would be classified as an ''extreme heatwave'' and the 2010 Russian heatwave which led to thousands of deaths and extensive wildfires would be classified as ''exceptional''). Every additional degree will intensify extreme precipitation events by about 7 percent. The peak winds of the most intense tropical cyclones (hurricanes) are projected to increase with warming. In addition to a higher intensity, the IPCC found that precipitation and frequency of rapid intensification of these storms has already increased, while the movement speed has decreased, and elevated sea levels have increased coastal flooding, all of which make these tropical cyclones more damaging.[677]

The NCA4 recognized that climate change can increase risks to national security, both through direct impacts on military infrastructure, but also by affecting factors such as food and water availability that can exacerbate conflict outside U.S. borders. Droughts, floods, storm surges, wildfires, and other extreme events stress nations and people through loss of life, displacement of populations, and impacts on livelihoods.[678] Risks to food security would increase from ''medium'' to ''high'' for several lower income regions in the Sahel, southern Africa, the Mediterranean, central Europe, and the Amazon. In addition to food security issues, this temperature increase would have implications for human health in terms of increasing ozone pollution, heatwaves, and vector-borne diseases (for example, expanding the range of the mosquitoes which carry dengue fever, chikungunya, yellow fever, and the Zika virus; or the ticks that carry Lyme disease or Rocky Mountain Spotted Fever).[679]

The NCA4 also evaluated a number of impacts specific to the United States. Severe drought and outbreaks of insects like the mountain pine beetle have killed hundreds of millions of trees in the western United States. Wildfires have burned more than 3.7 million acres in 14 of the 17 years between 2000 and 2016, and Federal wildfire suppression costs were about a billion dollars annually.[680] The National Interagency Fire Center has documented U.S. wildfires since 1983; the 10 years with the largest acreage burned have all occurred since 2004.[681] Wildfire smoke degrades air quality, increasing health

[667] IPCC, 2021: Summary for Policymakers. In: Climate Change 2021: The Physical Science Basis. Contribution of Working Group I to the Sixth Assessment Report of the Intergovernmental Panel on Climate Change [Masson-Delmotte, V., P. Zhai, A. Pirani, S.L. Connors, C. Pe´an, S. Berger, N. Caud, Y. Chen, L. Goldfarb, M.I. Gomis, M. Huang, K. Leitzell, E. Lonnoy, J.B.R. Matthews, T.K. Maycock, T. Waterfield, O. Yelekçi, R. Yu and B. Zhou (eds.)]. Cambridge University Press.

[668] *Ibid.*

[669] *Ibid.*

[670] USGCRP, 2018: Impacts, Risks, and Adaptation in the United States: Fourth National Climate Assessment, Volume II [Reidmiller, D.R., C.W. Avery, D.R. Easterling, K.E. Kunkel, K.L.M. Lewis, T.K. Maycock, and B.C. Stewart (eds.)]. U.S. Global Change Research Program, Washington, DC, USA, 1515 pp. doi: 10.7930/NCA4.2018.

[671] IPCC, 2018: Global Warming of 1.5 °C. An IPCC Special Report on the impacts of global warming of 1.5 °C above pre-industrial levels and related global greenhouse gas emission pathways, in the context of strengthening the global response to the threat of climate change, sustainable development, and efforts to eradicate poverty [Masson-Delmotte, V., P. Zhai, H.-O. Portner, D. Roberts, J. Skea, P.R. Shukla, A. Pirani, W. Moufouma-Okia, C. Pe´an, R. Pidcock, S. Connors, J.B.R. Matthews, Y. Chen, X. Zhou, M.I. Gomis, E. Lonnoy, T. Maycock, M. Tignor, and T. Waterfield (eds.)].

[672] These are drought measures based on soil moisture.

[673] IPCC, 2021.

[674] USGCRP, 2021.

[675] IPCC, 2018.

[676] IPCC, 2022: Summary for Policymakers [H.-O. Pörtner, D.C. Roberts, E.S. Poloczanska, K. Mintenbeck, M. Tignor, A. Alegría, M. Craig, S. Langsdorf, S. Löschke, V. Möller, A. Okem (eds.)]. In: Climate Change 2022: Impacts, Adaptation and Vulnerability. Contribution of Working Group II to the Sixth Assessment Report of the Intergovernmental Panel on Climate Change [H.-O. Pörtner, D.C. Roberts, M. Tignor, E.S. Poloczanska, K. Mintenbeck, A. Alegría, M. Craig, S. Langsdorf, S. Löschke, V. Möller, A. Okem, B. Rama (eds.)]. Cambridge University Press, Cambridge, UK and New York, NY, USA, pp. 3–33, doi:10.1017/9781009325844.001.

[677] IPCC, 2021.

[678] USGCRP, 2018.

[679] IPCC, 2018.

[680] USGCRP, 2018.

[681] NIFC (National Interagency Fire Center). 2022. Total wildland fires and acres (1983–2020). Accessed November 2022. *https://www.nifc.gov/sites/default/files/document-media/TotalFires.pdf.*

risks. More frequent and severe wildfires due to climate change would further diminish air quality, increase incidences of respiratory illness, impair visibility, and disrupt outdoor activities, sometimes thousands of miles from the location of the fire.[682]

While GHGs collectively are not the only factor that controls climate, it is illustrative that 3 million years ago (the last time CO_2 concentrations were this high) Greenland was not yet completely covered by ice and still supported forests, while 23 million years ago (the last time concentrations were above 450 ppm) the West Antarctic ice sheet was not yet developed, indicating the possibility that high GHG concentrations could lead to a world that looks very different from today and from the conditions in which human civilization has developed. If the Greenland and Antarctic ice sheets were to melt substantially, sea levels would rise dramatically—the IPCC estimated that during the next 2,000 years, sea level will rise by 7 to 10 feet even if warming is limited to 1.5 °C (2.7 °F), from 7 to 20 feet if limited to 2 °C (3.6 °F), and by 60 to 70 feet if warming is allowed to reach 5 °C (9 °F) above preindustrial levels.[683] For context, almost all of the city of Miami is less than 25 feet above sea level, and the NCA4 stated that 13 million Americans would be at risk of migration due to 6 feet of sea level rise. Meanwhile, sea level rise has amplified coastal flooding and erosion impacts, requiring the installation of costly pump stations, flooding streets, and increasing storm surge damages. Tens of billions of dollars of U.S. real estate could be below sea level by 2050 under some scenarios. Increased frequency and duration of drought will reduce agricultural productivity in some regions, accelerate depletion of water supplies for irrigation, and expand the distribution and incidence of pests and diseases for crops and livestock.

Transportation is the largest U.S. source of GHG emissions, representing 27 percent of total GHG emissions. Within the transportation sector, heavy-duty vehicles are the second largest contributor to GHG emissions and are responsible for 25 percent of GHG emissions in the sector. The reduction in GHG emissions from the standards in this proposal, quantified in Section V of this preamble, would contribute toward the goal of holding the increase in the global average temperature to well below 2 °C above pre-industrial levels, and subsequently reduce the probability of severe climate change-related impacts including heat waves, drought, sea level rise, extreme climate and weather events, coastal flooding, and wildfires.[684] Section VI.D.1 of this preamble discusses impacts of GHG emissions on individuals living in socially and economically vulnerable communities. While EPA did not conduct modeling to specifically quantify changes in climate impacts resulting from this rule in terms of avoided temperature change or sea-level rise, we did quantify climate benefits by monetizing the emission reductions through the application of the social cost of greenhouse gases (SC–GHGs), as described in Section VII.A of this preamble.

B. Health and Environmental Effects Associated With Exposure to Non-GHG Pollutants

The non-GHG emissions that would be impacted by the proposed rule contribute, directly or via secondary formation, to concentrations of pollutants in the air which affect human and environmental health. These pollutants include particulate matter, ozone, nitrogen oxides, sulfur oxides, carbon monoxide and air toxics.

1. Background on Criteria and Air Toxics Pollutants Impacted by This Proposal

i. Particulate Matter

Particulate matter (PM) is a complex mixture of solid particles and liquid droplets distributed among numerous atmospheric gases which interact with solid and liquid phases. Particles in the atmosphere range in size from less than 0.01 to more than 10 micrometers (μm) in diameter.[685] Atmospheric particles can be grouped into several classes according to their aerodynamic diameter and physical sizes. Generally, the three broad classes of particles include ultrafine particles (UFPs, generally considered as particles with a diameter less than or equal to 0.1 μm [typically based on physical size, thermal diffusivity, or electrical mobility]), ''fine'' particles ($PM_{2.5}$; particles with a nominal mean aerodynamic diameter less than or equal to 2.5 μm), and ''thoracic'' particles (PM_{10}; particles with a nominal mean aerodynamic diameter less than or equal to 10 μm). Particles that fall within the size range between $PM_{2.5}$ and PM_{10}, are referred to as ''thoracic coarse particles'' ($PM_{10-2.5}$, particles with a nominal mean aerodynamic diameter greater than 2.5 μm and less than or equal to 10 μm). EPA currently has NAAQS for $PM_{2.5}$ and PM_{10}.[686]

Most particles are found in the lower troposphere, where they can have residence times ranging from a few hours to weeks. Particles are removed from the atmosphere by wet deposition, such as when they are carried by rain or snow, or by dry deposition, when particles settle out of suspension due to gravity. Atmospheric lifetimes are generally longest for $PM_{2.5}$, which often remains in the atmosphere for days to weeks before being removed by wet or dry deposition.[687] In contrast, atmospheric lifetimes for UFP and $PM_{10-2.5}$ are shorter. Within hours, UFP can undergo coagulation and condensation that lead to formation of larger particles in the accumulation mode or can be removed from the atmosphere by evaporation, deposition, or reactions with other atmospheric components. $PM_{10-2.5}$ are also generally removed from the atmosphere within hours, through wet or dry deposition.[688]

Particulate matter consists of both primary and secondary particles. Primary particles are emitted directly from sources, such as combustion-related activities (*e.g.,* industrial activities, motor vehicle operation, biomass burning), while secondary particles are formed through atmospheric chemical reactions of gaseous precursors (*e.g.,* sulfur oxides (SO_X), nitrogen oxides (NO_X) and volatile organic compounds (VOCs)).

ii. Ozone

Ground-level ozone pollution forms in areas with high concentrations of ambient NO_X and VOCs when solar radiation is strong. Major U.S. sources of NO_X are highway and nonroad motor vehicles, engines, power plants and other industrial sources, with natural sources, such as soil, vegetation, and lightning, serving as smaller sources.

[682] USGCRP, 2018.

[683] IPCC, 2021.

[684] Paris Agreement FCCC/CP/2015/10/Add.1 *https://unfccc.int/documents/9097.*

[685] U.S. EPA. Policy Assessment (PA) for the Review of the National Ambient Air Quality Standards for Particulate Matter (Final Report, 2020). U.S. Environmental Protection Agency, Washington, DC, EPA/452/R–20/002, 2020.

[686] Regulatory definitions of PM size fractions, and information on reference and equivalent methods for measuring PM in ambient air, are provided in 40 CFR parts 50, 53, and 58. With regard to NAAQS which provide protection against health and welfare effects, the 24-hour PM_{10} standard provides protection against effects associated with short-term exposure to thoracic coarse particles (*i.e.,* $PM_{10-2.5}$).

[687] U.S. EPA. Integrated Science Assessment (ISA) for Particulate Matter (Final Report, 2019). U.S. Environmental Protection Agency, Washington, DC, EPA/600/R–19/188, 2019. Table 2–1.

[688] U.S. EPA. Integrated Science Assessment (ISA) for Particulate Matter (Final Report, 2019). U.S. Environmental Protection Agency, Washington, DC, EPA/600/R–19/188, 2019. Table 2–1.

Vegetation is the dominant source of VOCs in the United States. Volatile consumer and commercial products, such as propellants and solvents, highway and nonroad vehicles, engines, fires, and industrial sources also contribute to the atmospheric burden of VOCs at ground-level.

The processes underlying ozone formation, transport, and accumulation are complex. Ground-level ozone is produced and destroyed by an interwoven network of free radical reactions involving the hydroxyl radical (OH), NO, NO_2, and complex reaction intermediates derived from VOCs. Many of these reactions are sensitive to temperature and available sunlight. High ozone events most often occur when ambient temperatures and sunlight intensities remain high for several days under stagnant conditions. Ozone and its precursors can also be transported hundreds of miles downwind, which can lead to elevated ozone levels in areas with otherwise low VOC or NO_X emissions. As an air mass moves and is exposed to changing ambient concentrations of NO_X and VOCs, the ozone photochemical regime (relative sensitivity of ozone formation to NO_X and VOC emissions) can change.

When ambient VOC concentrations are high, comparatively small amounts of NO_X catalyze rapid ozone formation. Without available NO_X, ground-level ozone production is severely limited, and VOC reductions would have little impact on ozone concentrations. Photochemistry under these conditions is said to be ''NO_X-limited.'' When NO_X levels are sufficiently high, faster NO_2 oxidation consumes more radicals, dampening ozone production. Under these ''VOC-limited'' conditions (also referred to as '' NO_X-saturated'' conditions), VOC reductions are effective in reducing ozone, and NO_X can react directly with ozone, resulting in suppressed ozone concentrations near NO_X emission sources. Under these NO_X-saturated conditions, NO_X reductions can increase local ozone under certain circumstances, but overall ozone production (considering downwind formation) decreases and, even in VOC-limited areas, NO_X reductions are not expected to increase ozone levels if the NO_X reductions are sufficiently large—large enough for photochemistry to become NO_X-limited.

iii. Nitrogen Oxides

Oxides of nitrogen (NO_X) refers to nitric oxide (NO) and nitrogen dioxide (NO_2). Most NO_2 is formed in the air through the oxidation of nitric oxide (NO) emitted when fuel is burned at a high temperature. NO_X is a major contributor to secondary $PM_{2.5}$ formation, and NO_X along with VOCs are the two major precursors of ozone.

iv. Sulfur Oxides

Sulfur dioxide (SO_2), a member of the sulfur oxide (SO_X) family of gases, is formed from burning fuels containing sulfur (*e.g.,* coal or oil), extracting gasoline from oil, or extracting metals from ore. SO_2 and its gas phase oxidation products can dissolve in water droplets and further oxidize to form sulfuric acid which reacts with ammonia to form sulfates, which are important components of ambient PM.

v. Carbon Monoxide

Carbon monoxide (CO) is a colorless, odorless gas emitted from combustion processes. Nationally, particularly in urban areas, the majority of CO emissions to ambient air come from mobile sources.[689]

vi. Diesel Exhaust

Diesel exhaust is a complex mixture composed of particulate matter, carbon dioxide, oxygen, nitrogen, water vapor, carbon monoxide, nitrogen compounds, sulfur compounds and numerous low-molecular-weight hydrocarbons. A number of these gaseous hydrocarbon components are individually known to be toxic, including aldehydes, benzene and 1,3-butadiene. The diesel particulate matter present in diesel exhaust consists mostly of fine particles (less than 2.5 μm), of which a significant fraction is ultrafine particles (less than 0.1 μm). These particles have a large surface area which makes them an excellent medium for adsorbing organics, and their small size makes them highly respirable. Many of the organic compounds present in the gases and on the particles, such as polycyclic organic matter, are individually known to have mutagenic and carcinogenic properties.

Diesel exhaust varies significantly in chemical composition and particle sizes between different engine types (heavy-duty, light-duty), engine operating conditions (idle, acceleration, deceleration), and fuel formulations (high/low sulfur fuel). Also, there are emissions differences between on-road and nonroad engines because the nonroad engines are generally of older technology. After being emitted in the engine exhaust, diesel exhaust undergoes dilution as well as chemical and physical changes in the atmosphere. The lifetimes of the components present in diesel exhaust range from seconds to days.

vii. Air Toxics

The most recent available data indicate that millions of Americans live in areas where air toxics pose potential health concerns.[690] [691] The levels of air toxics to which people are exposed vary depending on where people live and work and the kinds of activities in which they engage, as discussed in detail in EPA's 2007 Mobile Source Air Toxics Rule.[692] According to EPA's Air Toxics Screening Assessment (AirToxScreen) for 2018, mobile sources were responsible for 40 percent of outdoor anthropogenic toxic emissions and were the largest contributor to national average cancer and noncancer risk from directly emitted pollutants.[693] [694] Mobile sources are also significant contributors to precursor emissions which react to form air toxics.[695] Formaldehyde is the largest contributor to cancer risk of all 71 pollutants quantitatively assessed in the 2018 AirToxScreen. Mobile sources were responsible for 26 percent of primary anthropogenic emissions of this pollutant in 2018 and are significant contributors to formaldehyde precursor emissions. Benzene is also a large contributor to cancer risk, and mobile sources account for about 60 percent of average exposure to ambient concentrations.

[689] U.S. EPA, (2010). Integrated Science Assessment for Carbon Monoxide (Final Report). U.S. Environmental Protection Agency, Washington, DC, EPA/600/R–09/019F, 2010. *http://cfpub.epa.gov/ncea/cfm/recordisplay.cfm?deid=218686*. See Section 2.1.

[690] Air toxics are pollutants known to cause or suspected of causing cancer or other serious health effects. Air toxics are also known as toxic air pollutants or hazardous air pollutants. *https://www.epa.gov/AirToxScreen/airtoxscreen-glossary-terms#air-toxics*.

[691] U.S. EPA (2022) Technical Support Document EPA Air Toxics Screening Assessment. 2017AirToxScreen TSD. *https://www.epa.gov/system/files/documents/2022-03/airtoxscreen_2017tsd.pdf*.

[692] U.S. Environmental Protection Agency (2007). Control of Hazardous Air Pollutants from Mobile Sources; Final Rule. 72 FR 8434, February 26, 2007.

[693] U.S. EPA. (2022) 2018 Air Toxics Screening Assessment. *https://www.epa.gov/AirToxScreen/2018-airtoxscreen-assessment-results*.

[694] AirToxScreen also includes estimates of risk attributable to background concentrations, which includes contributions from long-range transport, persistent air toxics, and natural sources; as well as secondary concentrations, where toxics are formed via secondary formation. Mobile sources substantially contribute to long-range transport and secondarily formed air toxics.

[695] Rich Cook, Sharon Phillips, Madeleine Strum, Alison Eyth & James Thurman (2020): Contribution of mobile sources to secondary formation of carbonyl compounds, Journal of the Air & Waste Management Association, DOI: 10.1080/10962247.2020.1813839.

2. Health Effects Associated With Exposure to Non-GHG Pollutants

Emissions sources impacted by this proposal emit pollutants that contribute to ambient concentrations of non-GHG pollutants. This section of the preamble discusses the health effects associated with exposure to these pollutants.

Additionally, because children have increased vulnerability and susceptibility for adverse health effects related to air pollution exposures, EPA's findings regarding adverse effects for children related to exposure to pollutants that are impacted by this rule are noted in this section. The increased vulnerability and susceptibility of children to air pollution exposures may arise because infants and children generally breathe more relative to their size than adults, and consequently they may be exposed to relatively higher amounts of air pollution.[696] Children also tend to breathe through their mouths more than adults, and their nasal passages are less effective at removing pollutants, which leads to greater lung deposition of some pollutants such as PM.[697] [698] Furthermore, air pollutants may pose health risks specific to children because children's bodies are still developing.[699] For example, during periods of rapid growth such as fetal development, infancy and puberty, their developing systems and organs may be more easily harmed.[700] [701] EPA produces the report titled ''America's Children and the Environment,'' which presents national trends on air pollution and other contaminants and environmental health of children.[702]

i. Particulate Matter

Scientific evidence spanning animal toxicological, controlled human exposure, and epidemiologic studies shows that exposure to ambient PM is associated with a broad range of health effects. These health effects are discussed in detail in the Integrated Science Assessment for Particulate Matter, which was finalized in December 2019 (2019 PM ISA), with a more targeted evaluation of studies published since the literature cutoff date of the 2019 PM ISA in the Supplement to the Integrated Science Assessment for PM (Supplement).[703] [704] The PM ISA characterizes the causal nature of relationships between PM exposure and broad health categories (*e.g.,* cardiovascular effects, respiratory effects, etc.) using a weight-of-evidence approach.[705] Within this characterization, the PM ISA summarizes the health effects evidence for short-term (*i.e.,* hours up to one month) and long-term (*i.e.,* one month to years) exposures to $PM_{2.5}$, $PM_{10-2.5}$, and ultrafine particles and concludes that exposures to ambient $PM_{2.5}$ are associated with a number of adverse health effects. The discussion in this Section VI.B.2.i highlights the PM ISA's conclusions and summarizes additional information from the Supplement where appropriate, pertaining to the health effects evidence for both short- and long-term PM exposures. Further discussion of PM-related health effects can also be found in the 2022 Policy Assessment for the review of the PM NAAQS.[706]

EPA has concluded that recent evidence in combination with evidence evaluated in the 2009 PM ISA supports a ''causal relationship'' between both long- and short-term exposures to $PM_{2.5}$ and premature mortality and cardiovascular effects and a ''likely to be causal relationship'' between long- and short-term $PM_{2.5}$ exposures and respiratory effects.[707] Additionally, recent experimental and epidemiologic studies provide evidence supporting a ''likely to be causal relationship'' between long-term $PM_{2.5}$ exposure and nervous system effects and between long-term $PM_{2.5}$ exposure and cancer. Because of remaining uncertainties and limitations in the evidence base, EPA determined a ''suggestive of, but not sufficient to infer, a causal relationship'' for long-term $PM_{2.5}$ exposure and reproductive and developmental effects (*i.e.,* male/female reproduction and fertility; pregnancy and birth outcomes), long- and short-term exposures and metabolic effects, and short-term exposure and nervous system effects.

As discussed extensively in the 2019 PM ISA and the Supplement, recent studies continue to support a ''causal relationship'' between short- and long-term $PM_{2.5}$ exposures and mortality.[708] [709] For short-term $PM_{2.5}$ exposure, multi-city studies, in combination with single- and multi-city studies evaluated in the 2009 PM ISA, provide evidence of consistent, positive associations across studies conducted in different geographic locations, populations with different demographic characteristics, and studies using different exposure assignment techniques. Additionally, the consistent and coherent evidence across scientific disciplines for cardiovascular morbidity, particularly ischemic events and heart failure, and to a lesser degree for respiratory morbidity, including exacerbations of chronic obstructive pulmonary disease (COPD) and asthma,

[696] EPA (2009) Metabolically-derived ventilation rates: A revised approach based upon oxygen consumption rates. Washington, DC: Office of Research and Development. EPA/600/R–06/129F. *http://cfpub.epa.gov/ncea/cfm/recordisplay.cfm?deid=202543*.

[697] U.S. EPA Integrated Science Assessment for Particulate Matter (Final Report, 2019). U.S. Environmental Protection Agency, Washington, DC, EPA/600/R–19/188, 2019. Chapter 4 ''Overall Conclusions'' p. 4–1.

[698] Foos, B.; Marty, M.; Schwartz, J.; Bennet, W.; Moya, J.; Jarabek, A.M.; Salmon, A.G. (2008) Focusing on children's inhalation dosimetry and health effects for risk assessment: An introduction. J Toxicol Environ Health 71A: 149–165.

[699] Children's environmental health includes conception, infancy, early childhood and through adolescence until 21 years of age as described in the EPA Memorandum: Issuance of EPA's 2021 Policy on Children's Health. October 5, 2021. Available at *https://www.epa.gov/system/files/documents/2021-10/2021-policy-on-childrens-health.pdf*.

[700] EPA (2006) A Framework for Assessing Health Risks of Environmental Exposures to Children. EPA, Washington, DC, EPA/600/R–05/093F, 2006.

[701] U.S. Environmental Protection Agency. (2005). Supplemental guidance for assessing susceptibility from early-life exposure to carcinogens. Washington, DC: Risk Assessment Forum. EPA/630/R–03/003F. *https://www3.epa.gov/airtoxics/childrens_supplement_final.pdf*.

[702] U.S. EPA. America's Children and the Environment. Available at: *https://www.epa.gov/americaschildrenenvironment*.

[703] U.S. EPA. Integrated Science Assessment (ISA) for Particulate Matter (Final Report, 2019). U.S. Environmental Protection Agency, Washington, DC, EPA/600/R–19/188, 2019.

[704] U.S. EPA. Supplement to the 2019 Integrated Science Assessment for Particulate Matter (Final Report, 2022). U.S. Environmental Protection Agency, Washington, DC, EPA/635/R–22/028, 2022.

[705] The causal framework draws upon the assessment and integration of evidence from across scientific disciplines, spanning atmospheric chemistry, exposure, dosimetry and health effects studies (*i.e.,* epidemiologic, controlled human exposure, and animal toxicological studies), and assess the related uncertainties and limitations that ultimately influence our understanding of the evidence. This framework employs a five-level hierarchy that classifies the overall weight-of-evidence with respect to the causal nature of relationships between criteria pollutant exposures and health and welfare effects using the following categorizations: causal relationship; likely to be causal relationship; suggestive of, but not sufficient to infer, a causal relationship; inadequate to infer the presence or absence of a causal relationship; and not likely to be a causal relationship (U.S. EPA. (2019). Integrated Science Assessment for Particulate Matter (Final Report). U.S. Environmental Protection Agency, Washington, DC, EPA/600/R–19/188, Section P. 3.2.3).

[706] U.S. EPA. Policy Assessment (PA) for the Reconsideration of the National Ambient Air Quality Standards for Particulate Matter (Final Report, 2022). U.S. Environmental Protection Agency, Washington, DC, EPA–452/R–22–004, 2022.

[707] U.S. EPA. (2009). Integrated Science Assessment for Particulate Matter (Final Report). U.S. Environmental Protection Agency, Washington, DC, EPA/600/R–08/139F.

[708] U.S. EPA. Integrated Science Assessment (ISA) for Particulate Matter (Final Report, 2019). U.S. Environmental Protection Agency, Washington, DC, EPA/600/R–19/188, 2019.

[709] U.S. EPA. Supplement to the 2019 Integrated Science Assessment for Particulate Matter (Final Report, 2022). U.S. Environmental Protection Agency, Washington, DC, EPA/635/R–22/028, 2022.

provide biological plausibility for cause-specific mortality and ultimately total mortality. Recent epidemiologic studies evaluated in the Supplement, including studies that employed alternative methods for confounder control, provide additional support to the evidence base that contributed to the 2019 PM ISA conclusion for short-term $PM_{2.5}$ exposure and mortality.

The 2019 PM ISA concluded a ''causal relationship'' between long-term $PM_{2.5}$ exposure and mortality. In addition to reanalyses and extensions of the American Cancer Society (ACS) and Harvard Six Cities (HSC) cohorts, multiple new cohort studies conducted in the United States and Canada consisting of people employed in a specific job (*e.g.,* teacher, nurse), and that apply different exposure assignment techniques, provide evidence of positive associations between long-term $PM_{2.5}$ exposure and mortality. Biological plausibility for mortality due to long-term $PM_{2.5}$ exposure is provided by the coherence of effects across scientific disciplines for cardiovascular morbidity, particularly for coronary heart disease, stroke, and atherosclerosis, and for respiratory morbidity, particularly for the development of COPD. Additionally, recent studies provide evidence indicating that as long-term $PM_{2.5}$ concentrations decrease there is an increase in life expectancy. Recent cohort studies evaluated in the Supplement, as well as epidemiologic studies that conducted accountability analyses or employed alternative methods for confounder controls, support and extend the evidence base that contributed to the 2019 PM ISA conclusion for long-term $PM_{2.5}$ exposure and mortality.

A large body of studies examining both short- and long-term $PM_{2.5}$ exposure and cardiovascular effects builds on the evidence base evaluated in the 2009 PM ISA. The strongest evidence for cardiovascular effects in response to short-term $PM_{2.5}$ exposures is for ischemic heart disease and heart failure. The evidence for short-term $PM_{2.5}$ exposure and cardiovascular effects is coherent across scientific disciplines and supports a continuum of effects ranging from subtle changes in indicators of cardiovascular health to serious clinical events, such as increased emergency department visits and hospital admissions due to cardiovascular disease and cardiovascular mortality. For long-term $PM_{2.5}$ exposure, there is strong and consistent epidemiologic evidence of a relationship with cardiovascular mortality. This evidence is supported by epidemiologic and animal toxicological studies demonstrating a range of cardiovascular effects including coronary heart disease, stroke, impaired heart function, and subclinical markers (*e.g.,* coronary artery calcification, atherosclerotic plaque progression), which collectively provide coherence and biological plausibility. Recent epidemiologic studies evaluated in the Supplement, as well as studies that conducted accountability analyses or employed alternative methods for confounder control, support and extend the evidence base that contributed to the 2019 PM ISA conclusion for both short- and long-term $PM_{2.5}$ exposure and cardiovascular effects.

Studies evaluated in the 2019 PM ISA continue to provide evidence of a ''likely to be causal relationship'' between both short- and long-term $PM_{2.5}$ exposure and respiratory effects. Epidemiologic studies provide consistent evidence of a relationship between short-term $PM_{2.5}$ exposure and asthma exacerbation in children and COPD exacerbation in adults as indicated by increases in emergency department visits and hospital admissions, which is supported by animal toxicological studies indicating worsening allergic airways disease and subclinical effects related to COPD. Epidemiologic studies also provide evidence of a relationship between short-term $PM_{2.5}$ exposure and respiratory mortality. However, there is inconsistent evidence of respiratory effects, specifically lung function declines and pulmonary inflammation, in controlled human exposure studies. With respect to long term $PM_{2.5}$ exposure, epidemiologic studies conducted in the United States and abroad provide evidence of a relationship with respiratory effects, including consistent changes in lung function and lung function growth rate, increased asthma incidence, asthma prevalence, and wheeze in children; acceleration of lung function decline in adults; and respiratory mortality. The epidemiologic evidence is supported by animal toxicological studies, which provide coherence and biological plausibility for a range of effects including impaired lung development, decrements in lung function growth, and asthma development.

Since the 2009 PM ISA, a growing body of scientific evidence examined the relationship between long-term $PM_{2.5}$ exposure and nervous system effects, resulting for the first time in a causality determination for this health effects category of a ''likely to be causal relationship.'' The strongest evidence for effects on the nervous system comes from epidemiologic studies that consistently report cognitive decrements and reductions in brain volume in adults. The effects observed in epidemiologic studies in adults are supported by animal toxicological studies demonstrating effects on the brain of adult animals including inflammation, morphologic changes, and neurodegeneration of specific regions of the brain. There is more limited evidence for neurodevelopmental effects in children, with some studies reporting positive associations with autism spectrum disorder and others providing limited evidence of an association with cognitive function. While there is some evidence from animal toxicological studies indicating effects on the brain (*i.e.,* inflammatory and morphological changes) to support a biologically plausible pathway for neurodevelopmental effects, epidemiologic studies are limited due to their lack of control for potential confounding by copollutants, the small number of studies conducted, and uncertainty regarding critical exposure windows.

Building off the decades of research demonstrating mutagenicity, DNA damage, and other endpoints related to genotoxicity due to whole PM exposures, recent experimental and epidemiologic studies focusing specifically on $PM_{2.5}$ provide evidence of a relationship between long-term $PM_{2.5}$ exposure and cancer. Epidemiologic studies examining long-term $PM_{2.5}$ exposure and lung cancer incidence and mortality provide evidence of generally positive associations in cohort studies spanning different populations, locations, and exposure assignment techniques. Additionally, there is evidence of positive associations with lung cancer incidence and mortality in analyses limited to never smokers. The epidemiologic evidence is supported by both experimental and epidemiologic evidence of genotoxicity, epigenetic effects, carcinogenic potential, and that $PM_{2.5}$ exhibits several characteristics of carcinogens, which collectively provides biological plausibility for cancer development and resulted in the conclusion of a ''likely to be causal relationship.''

For the additional health effects categories evaluated for $PM_{2.5}$ in the 2019 PM ISA, experimental and epidemiologic studies provide limited and/or inconsistent evidence of a relationship with $PM_{2.5}$ exposure. As a result, the 2019 PM ISA concluded that the evidence is ''suggestive of, but not sufficient to infer a causal relationship''

for short-term $PM_{2.5}$ exposure and metabolic effects and nervous system effects and for long-term $PM_{2.5}$ exposures and metabolic effects as well as reproductive and developmental effects.

In addition to evaluating the health effects attributed to short- and long-term exposure to $PM_{2.5}$, the 2019 PM ISA also conducted an extensive evaluation as to whether specific components or sources of $PM_{2.5}$ are more strongly related with health effects than $PM_{2.5}$ mass. An evaluation of those studies resulted in the 2019 PM ISA concluding that ''many $PM_{2.5}$ components and sources are associated with many health effects, and the evidence does not indicate that any one source or component is consistently more strongly related to health effects than $PM_{2.5}$ mass.'' [710]

For both $PM_{10\text{-}2.5}$ and UFPs, for all health effects categories evaluated, the 2019 PM ISA concluded that the evidence was ''suggestive of, but not sufficient to infer, a causal relationship'' or ''inadequate to determine the presence or absence of a causal relationship.'' For $PM_{10\text{-}2.5}$, although a Federal Reference Method (FRM) was instituted in 2011 to measure $PM_{10\text{-}2.5}$ concentrations nationally, the causality determinations reflect that the same uncertainty identified in the 2009 PM ISA with respect to the method used to estimate $PM_{10\text{-}2.5}$ concentrations in epidemiologic studies persists. Specifically, across epidemiologic studies, different approaches are used to estimate $PM_{10\text{-}2.5}$ concentrations (*e.g.,* direct measurement of $PM_{10\text{-}2.5}$, difference between PM_{10} and $PM_{2.5}$ concentrations), and it remains unclear how well correlated $PM_{10\text{-}2.5}$ concentrations are both spatially and temporally across the different methods used.

For UFPs, which have often been defined as particles less than 0.1 μm, the uncertainty in the evidence for the health effect categories evaluated across experimental and epidemiologic studies reflects the inconsistency in the exposure metric used (*i.e.,* particle number concentration, surface area concentration, mass concentration) as well as the size fractions examined. In epidemiologic studies the size fraction examined can vary depending on the monitor used and exposure metric, with some studies examining number count over the entire particle size range, while experimental studies that use a particle concentrator often examine particles up to 0.3 μm. Additionally, due to the lack of a monitoring network, there is limited information on the spatial and temporal variability of UFPs within the United States, as well as population exposures to UFPs, which adds uncertainty to epidemiologic study results.

The 2019 PM ISA cites extensive evidence indicating that ''both the general population as well as specific populations and life stages are at risk for $PM_{2.5}$-related health effects.'' [711] For example, in support of its ''causal'' and ''likely to be causal'' determinations, the ISA cites substantial evidence for (1) PM-related mortality and cardiovascular effects in older adults; (2) PM-related cardiovascular effects in people with pre-existing cardiovascular disease; (3) PM-related respiratory effects in people with pre-existing respiratory disease, particularly asthma exacerbations in children; and (4) PM-related impairments in lung function growth and asthma development in children. The ISA additionally notes that stratified analyses (*i.e.,* analyses that directly compare PM-related health effects across groups) provide strong evidence for racial and ethnic differences in $PM_{2.5}$ exposures and in the risk of $PM_{2.5}$-related health effects, specifically within Hispanic and non-Hispanic Black populations, with some evidence of increased risk for populations of low socioeconomic status. Recent studies evaluated in the Supplement support the conclusion of the 2019 PM ISA with respect to disparities in both $PM_{2.5}$ exposure and health risk by race and ethnicity and provide additional support for disparities for populations of lower socioeconomic status.[712] Additionally, evidence spanning epidemiologic studies that conducted stratified analyses, experimental studies focusing on animal models of disease or individuals with pre-existing disease, dosimetry studies, as well as studies focusing on differential exposure suggest that populations with pre-existing cardiovascular or respiratory disease, populations that are overweight or obese, populations that have particular genetic variants, and current/former smokers could be at increased risk for adverse $PM_{2.5}$-related health effects. The 2022 Policy Assessment for the review of the PM NAAQS also highlights that factors that may contribute to increased risk of $PM_{2.5}$-related health effects include lifestage (children and older adults), pre-existing diseases (cardiovascular disease and respiratory disease), race/ethnicity, and socioeconomic status.[713]

ii. Ozone

This section provides a summary of the health effects associated with exposure to ambient concentrations of ozone.[714] The information in this section is based on the information and conclusions in the April 2020 Integrated Science Assessment for Ozone (Ozone ISA).[715] The Ozone ISA concludes that human exposures to ambient concentrations of ozone are associated with a number of adverse health effects and characterizes the weight of evidence for these health effects.[716] The discussion in this Section VI.B.2.ii highlights the Ozone ISA's conclusions pertaining to health effects associated with both short-term and long-term periods of exposure to ozone.

For short-term exposure to ozone, the Ozone ISA concludes that respiratory effects, including lung function decrements, pulmonary inflammation, exacerbation of asthma, respiratory-related hospital admissions, and mortality, are causally associated with ozone exposure. It also concludes that metabolic effects, including metabolic syndrome (*i.e.,* changes in insulin or glucose levels, cholesterol levels, obesity and blood pressure) and complications due to diabetes are likely to be causally associated with short-term exposure to ozone and that evidence is suggestive of a causal relationship between cardiovascular effects, central nervous system effects

[710] U.S. EPA. Integrated Science Assessment (ISA) for Particulate Matter (Final Report, 2019). U.S. Environmental Protection Agency, Washington, DC, EPA/600/R–19/188, 2019.

[711] U.S. EPA. Integrated Science Assessment (ISA) for Particulate Matter (Final Report, 2019). U.S. Environmental Protection Agency, Washington, DC, EPA/600/R–19/188, 2019.

[712] U.S. EPA. Supplement to the 2019 Integrated Science Assessment for Particulate Matter (Final Report, 2022). U.S. Environmental Protection Agency, Washington, DC, EPA/635/R–22/028, 2022.

[713] U.S. EPA. Policy Assessment (PA) for the Reconsideration of the National Ambient Air Quality Standards for Particulate Matter (Final Report, 2022). U.S. Environmental Protection Agency, Washington, DC, EPA–452/R–22–004, 2022, p. 3–53.

[714] Human exposure to ozone varies over time due to changes in ambient ozone concentration and because people move between locations which have notably different ozone concentrations. Also, the amount of ozone delivered to the lung is influenced not only by the ambient concentrations but also by the breathing route and rate.

[715] U.S. EPA. Integrated Science Assessment (ISA) for Ozone and Related Photochemical Oxidants (Final Report). U.S. Environmental Protection Agency, Washington, DC, EPA/600/R–20/012, 2020.

[716] The ISA evaluates evidence and draws conclusions on the causal relationship between relevant pollutant exposures and health effects, assigning one of five ''weight of evidence'' determinations: causal relationship, likely to be a causal relationship, suggestive of a causal relationship, inadequate to infer a causal relationship, and not likely to be a causal relationship. For more information on these levels of evidence, please refer to Table II in the Preamble of the ISA.

and total mortality and short-term exposure to ozone.

For long-term exposure to ozone, the Ozone ISA concludes that respiratory effects, including new onset asthma, pulmonary inflammation and injury, are likely to be causally related with ozone exposure. The Ozone ISA characterizes the evidence as suggestive of a causal relationship for associations between long-term ozone exposure and cardiovascular effects, metabolic effects, reproductive and developmental effects, central nervous system effects and total mortality. The evidence is inadequate to infer a causal relationship between chronic ozone exposure and increased risk of cancer.

Finally, interindividual variation in human responses to ozone exposure can result in some groups being at increased risk for detrimental effects in response to exposure. In addition, some groups are at increased risk of exposure due to their activities, such as outdoor workers and children. The Ozone ISA identified several groups that are at increased risk for ozone-related health effects. These groups are people with asthma, children and older adults, individuals with reduced intake of certain nutrients (*i.e.,* Vitamins C and E), outdoor workers, and individuals having certain genetic variants related to oxidative metabolism or inflammation. Ozone exposure during childhood can have lasting effects through adulthood. Such effects include altered function of the respiratory and immune systems. Children absorb higher doses (normalized to lung surface area) of ambient ozone, compared to adults, due to their increased time spent outdoors, higher ventilation rates relative to body size, and a tendency to breathe a greater fraction of air through the mouth. Children also have a higher asthma prevalence compared to adults. Recent epidemiologic studies provide generally consistent evidence that long-term ozone exposure is associated with the development of asthma in children. Studies comparing age groups reported higher magnitude associations for short-term ozone exposure and respiratory hospital admissions and emergency room visits among children than among adults. Panel studies also provide support for experimental studies with consistent associations between short-term ozone exposure and lung function and pulmonary inflammation in healthy children. Additional children's vulnerability and susceptibility factors are listed in Section XI.G of the Preamble.

iii. Nitrogen Oxides

The most recent review of the health effects of oxides of nitrogen completed by EPA can be found in the 2016 Integrated Science Assessment for Oxides of Nitrogen—Health Criteria (Oxides of Nitrogen ISA).[717] The primary source of NO_2 is motor vehicle emissions, and ambient NO_2 concentrations tend to be highly correlated with other traffic-related pollutants. Thus, a key issue in characterizing the causality of NO_2-health effect relationships consists of evaluating the extent to which studies supported an effect of NO_2 that is independent of other traffic-related pollutants. EPA concluded that the findings for asthma exacerbation integrated from epidemiologic and controlled human exposure studies provided evidence that is sufficient to infer a causal relationship between respiratory effects and short-term NO_2 exposure. The strongest evidence supporting an independent effect of NO_2 exposure comes from controlled human exposure studies demonstrating increased airway responsiveness in individuals with asthma following ambient-relevant NO_2 exposures. The coherence of this evidence with epidemiologic findings for asthma hospital admissions and ED visits as well as lung function decrements and increased pulmonary inflammation in children with asthma describe a plausible pathway by which NO_2 exposure can cause an asthma exacerbation. The 2016 ISA for Oxides of Nitrogen also concluded that there is likely to be a causal relationship between long-term NO_2 exposure and respiratory effects. This conclusion is based on new epidemiologic evidence for associations of NO_2 with asthma development in children combined with biological plausibility from experimental studies.

In evaluating a broader range of health effects, the 2016 ISA for Oxides of Nitrogen concluded that evidence is ''suggestive of, but not sufficient to infer, a causal relationship'' between short-term NO_2 exposure and cardiovascular effects and mortality and between long-term NO_2 exposure and cardiovascular effects and diabetes, birth outcomes, and cancer. In addition, the scientific evidence is inadequate (insufficient consistency of epidemiologic and toxicological evidence) to infer a causal relationship for long-term NO_2 exposure with fertility, reproduction, and pregnancy, as well as with postnatal development. A key uncertainty in understanding the relationship between these non-respiratory health effects and short- or long-term exposure to NO_2 is co-pollutant confounding, particularly by other roadway pollutants. The available evidence for non-respiratory health effects does not adequately address whether NO_2 has an independent effect or whether it primarily represents effects related to other or a mixture of traffic-related pollutants.

The 2016 ISA for Oxides of Nitrogen concluded that people with asthma, children, and older adults are at increased risk for NO_2-related health effects. In these groups and lifestages, NO_2 is consistently related to larger effects on outcomes related to asthma exacerbation, for which there is confidence in the relationship with NO_2 exposure.

iv. Sulfur Oxides

This section provides an overview of the health effects associated with SO_2. Additional information on the health effects of SO_2 can be found in the 2017 Integrated Science Assessment for Sulfur Oxides—Health Criteria (SO_X ISA).[718] Following an extensive evaluation of health evidence from animal toxicological, controlled human exposure, and epidemiologic studies, the EPA has concluded that there is a causal relationship between respiratory health effects and short-term exposure to SO_2. The immediate effect of SO_2 on the respiratory system in humans is bronchoconstriction. People with asthma are more sensitive to the effects of SO_2, likely resulting from preexisting inflammation associated with this disease. In addition to those with asthma (both children and adults), there is suggestive evidence that all children and older adults may be at increased risk of SO_2-related health effects. In free-breathing laboratory studies involving controlled human exposures to SO_2, respiratory effects have consistently been observed following 5–10 min exposures at SO_2 concentrations ≥400 ppb in people with asthma engaged in moderate to heavy levels of exercise, with respiratory effects occurring at concentrations as low as 200 ppb in some individuals with asthma. A clear concentration-response relationship has been demonstrated in these studies following exposures to SO_2 at concentrations between 200 and 1000

[717] U.S. EPA. Integrated Science Assessment for Oxides of Nitrogen—Health Criteria (2016 Final Report). U.S. Environmental Protection Agency, Washington, DC, EPA/600/R–15/068, 2016.

[718] U.S. EPA. Integrated Science Assessment (ISA) for Sulfur Oxides—Health Criteria (Final Report, Dec 2017). U.S. Environmental Protection Agency, Washington, DC, EPA/600/R–17/451, 2017.

ppb, both in terms of increasing severity of respiratory symptoms and decrements in lung function, as well as the percentage of individuals with asthma adversely affected. Epidemiologic studies have reported positive associations between short-term ambient SO_2 concentrations and hospital admissions and emergency department visits for asthma and for all respiratory causes, particularly among children and older adults (≥65 years). The studies provide supportive evidence for the causal relationship.

For long-term SO_2 exposure and respiratory effects, the EPA has concluded that the evidence is suggestive of a causal relationship. This conclusion is based on new epidemiologic evidence for positive associations between long-term SO_2 exposure and increases in asthma incidence among children, together with animal toxicological evidence that provides a pathophysiologic basis for the development of asthma. However, uncertainty remains regarding the influence of other pollutants on the observed associations with SO_2 because these epidemiologic studies have not examined the potential for co-pollutant confounding.

Consistent associations between short-term exposure to SO_2 and mortality have been observed in epidemiologic studies, with larger effect estimates reported for respiratory mortality than for cardiovascular mortality. While this finding is consistent with the demonstrated effects of SO_2 on respiratory morbidity, uncertainty remains with respect to the interpretation of these observed mortality associations due to potential confounding by various copollutants. Therefore, the EPA has concluded that the overall evidence is suggestive of a causal relationship between short-term exposure to SO_2 and mortality.

v. Carbon Monoxide

Information on the health effects of carbon monoxide (CO) can be found in the January 2010 Integrated Science Assessment for Carbon Monoxide (CO ISA).[719] The CO ISA presents conclusions regarding the presence of causal relationships between CO exposure and categories of adverse health effects.[720] This section provides a summary of the health effects associated with exposure to ambient concentrations of CO, along with the CO ISA conclusions.[721]

Controlled human exposure studies of subjects with coronary artery disease show a decrease in the time to onset of exercise-induced angina (chest pain) and electrocardiogram changes following CO exposure. In addition, epidemiologic studies observed associations between short-term CO exposure and cardiovascular morbidity, particularly increased emergency room visits and hospital admissions for coronary heart disease (including ischemic heart disease, myocardial infarction, and angina). Some epidemiologic evidence is also available for increased hospital admissions and emergency room visits for congestive heart failure and cardiovascular disease as a whole. The CO ISA concludes that a causal relationship is likely to exist between short-term exposures to CO and cardiovascular morbidity. It also concludes that available data are inadequate to conclude that a causal relationship exists between long-term exposures to CO and cardiovascular morbidity.

Animal studies show various neurological effects with in-utero CO exposure. Controlled human exposure studies report central nervous system and behavioral effects following low-level CO exposures, although the findings have not been consistent across all studies. The CO ISA concludes that the evidence is suggestive of a causal relationship with both short- and long-term exposure to CO and central nervous system effects.

A number of studies cited in the CO ISA have evaluated the role of CO exposure in birth outcomes such as preterm birth or cardiac birth defects. There is limited epidemiologic evidence of a CO-induced effect on preterm births and birth defects, with weak evidence for a decrease in birth weight. Animal toxicological studies have found perinatal CO exposure to affect birth weight, as well as other developmental outcomes. The CO ISA concludes that the evidence is suggestive of a causal relationship between long-term exposures to CO and developmental effects and birth outcomes.

Epidemiologic studies provide evidence of associations between short-term CO concentrations and respiratory morbidity such as changes in pulmonary function, respiratory symptoms, and hospital admissions. A limited number of epidemiologic studies considered copollutants such as ozone, SO_2, and PM in two-pollutant models and found that CO risk estimates were generally robust, although this limited evidence makes it difficult to disentangle effects attributed to CO itself from those of the larger complex air pollution mixture. Controlled human exposure studies have not extensively evaluated the effect of CO on respiratory morbidity. Animal studies at levels of 50–100 ppm CO show preliminary evidence of altered pulmonary vascular remodeling and oxidative injury. The CO ISA concludes that the evidence is suggestive of a causal relationship between short-term CO exposure and respiratory morbidity, and inadequate to conclude that a causal relationship exists between long-term exposure and respiratory morbidity.

Finally, the CO ISA concludes that the epidemiologic evidence is suggestive of a causal relationship between short-term concentrations of CO and mortality. Epidemiologic evidence suggests an association exists between short-term exposure to CO and mortality, but limited evidence is available to evaluate cause-specific mortality outcomes associated with CO exposure. In addition, the attenuation of CO risk estimates which was often observed in co-pollutant models contributes to the uncertainty as to whether CO is acting alone or as an indicator for other combustion-related pollutants. The CO ISA also concludes that there is not likely to be a causal relationship between relevant long-term exposures to CO and mortality.

vi. Diesel Exhaust

In EPA's 2002 Diesel Health Assessment Document (Diesel HAD), exposure to diesel exhaust was classified as likely to be carcinogenic to humans by inhalation from environmental exposures, in accordance with the revised draft 1996/1999 EPA cancer guidelines.[722] [723] A number of

[719] U.S. EPA, (2010). Integrated Science Assessment for Carbon Monoxide (Final Report). U.S. Environmental Protection Agency, Washington, DC, EPA/600/R–09/019F, 2010.

[720] The ISA evaluates the health evidence associated with different health effects, assigning one of five ''weight of evidence'' determinations: causal relationship, likely to be a causal relationship, suggestive of a causal relationship, inadequate to infer a causal relationship, and not likely to be a causal relationship. For definitions of these levels of evidence, please refer to Section 1.6 of the ISA.

[721] Personal exposure includes contributions from many sources, and in many different environments. Total personal exposure to CO includes both ambient and non-ambient components; and both components may contribute to adverse health effects.

[722] U.S. EPA. (1999). Guidelines for Carcinogen Risk Assessment. Review Draft. NCEA–F–0644, July. Washington, DC: U.S. EPA. Retrieved on March 19, 2009 from *http://cfpub.epa.gov/ncea/cfm/recordisplay.cfm?deid=54932*.

[723] U.S. EPA (2002). Health Assessment Document for Diesel Engine Exhaust. EPA/600/8–90/057F Office of research and Development, Washington DC. Retrieved on March 17, 2009 from *http://cfpub.epa.gov/ncea/cfm/recordisplay.cfm?deid=29060*. pp. 1–1 1–2.

other agencies (National Institute for Occupational Safety and Health, the International Agency for Research on Cancer, the World Health Organization, California EPA, and the U.S. Department of Health and Human Services) made similar hazard classifications prior to 2002. EPA also concluded in the 2002 Diesel HAD that it was not possible to calculate a cancer unit risk for diesel exhaust due to limitations in the exposure data for the occupational groups or the absence of a dose-response relationship.

In the absence of a cancer unit risk, the Diesel HAD sought to provide additional insight into the significance of the diesel exhaust cancer hazard by estimating possible ranges of risk that might be present in the population. An exploratory analysis was used to characterize a range of possible lung cancer risk. The outcome was that environmental risks of cancer from long-term diesel exhaust exposures could plausibly range from as low as 10^{-5} to as high as 10^{-3}. Because of uncertainties, the analysis acknowledged that the risks could be lower than 10^{-5}, and a zero risk from diesel exhaust exposure could not be ruled out.

Noncancer health effects of acute and chronic exposure to diesel exhaust emissions are also of concern to EPA. EPA derived a diesel exhaust reference concentration (RfC) from consideration of four well-conducted chronic rat inhalation studies showing adverse pulmonary effects. The RfC is 5 $\mu g/m^3$ for diesel exhaust measured as diesel particulate matter. This RfC does not consider allergenic effects such as those associated with asthma or immunologic or the potential for cardiac effects. There was emerging evidence in 2002, discussed in the Diesel HAD, that exposure to diesel exhaust can exacerbate these effects, but the exposure-response data were lacking at that time to derive an RfC based on these then-emerging considerations. The Diesel HAD states, ''With [diesel particulate matter] being a ubiquitous component of ambient PM, there is an uncertainty about the adequacy of the existing [diesel exhaust] noncancer database to identify all of the pertinent [diesel exhaust]-caused noncancer health hazards.'' The Diesel HAD also notes ''that acute exposure to [diesel exhaust] has been associated with irritation of the eye, nose, and throat, respiratory symptoms (cough and phlegm), and neurophysiological symptoms such as headache, lightheadedness, nausea, vomiting, and numbness or tingling of the extremities.'' The Diesel HAD notes that the cancer and noncancer hazard conclusions applied to the general use of diesel engines then on the market and as cleaner engines replace a substantial number of existing ones, the applicability of the conclusions would need to be reevaluated.

It is important to note that the Diesel HAD also briefly summarizes health effects associated with ambient PM and discusses EPA's then-annual $PM_{2.5}$ NAAQS of 15 $\mu g/m^3$.[724] There is a large and extensive body of human data showing a wide spectrum of adverse health effects associated with exposure to ambient PM, of which diesel exhaust is an important component. The $PM_{2.5}$ NAAQS is designed to provide protection from the noncancer health effects and premature mortality attributed to exposure to $PM_{2.5}$. The contribution of diesel PM to total ambient PM varies in different regions of the country and, also, within a region, from one area to another. The contribution can be high in near-roadway environments, for example, or in other locations where diesel engine use is concentrated.

Since 2002, several new studies have been published which continue to report increased lung cancer risk associated with occupational exposure to diesel exhaust from older engines. Of particular note since 2011 are three new epidemiology studies that have examined lung cancer in occupational populations, including truck drivers, underground nonmetal miners, and other diesel motor-related occupations. These studies reported increased risk of lung cancer related to exposure to diesel exhaust, with evidence of positive exposure-response relationships to varying degrees.[725] [726] [727] These newer studies (along with others that have appeared in the scientific literature) add to the evidence EPA evaluated in the 2002 Diesel HAD and further reinforce the concern that diesel exhaust exposure likely poses a lung cancer hazard. The findings from these newer studies do not necessarily apply to newer technology diesel engines (*i.e.,* heavy-duty highway engines from 2007 and later model years) since the newer engines have large reductions in the emission constituents compared to older technology diesel engines.

In light of the growing body of scientific literature evaluating the health effects of exposure to diesel exhaust, in June 2012 the World Health Organization's International Agency for Research on Cancer (IARC), a recognized international authority on the carcinogenic potential of chemicals and other agents, evaluated the full range of cancer-related health effects data for diesel engine exhaust. IARC concluded that diesel exhaust should be regarded as ''carcinogenic to humans.'' [728] This designation was an update from its 1988 evaluation that considered the evidence to be indicative of a ''probable human carcinogen.''

vii. Air Toxics

Heavy-duty engine emissions contribute to ambient levels of air toxics that are known or suspected human or animal carcinogens or that have noncancer health effects. These compounds include, but are not limited to, acetaldehyde, acrolein, benzene, 1,3-butadiene, ethylbenzene, formaldehyde, and naphthalene, which were all identified as national or regional health effects drivers or contributors in the 2018 AirToxScreen Assessment.[729] [730]

a. Acetaldehyde

Acetaldehyde is classified in EPA's IRIS database as a probable human carcinogen, based on nasal tumors in rats, and is considered toxic by the inhalation, oral, and intravenous routes.[731] The inhalation unit risk estimate (URE) in IRIS for acetaldehyde is 2.2 × 10–6 per μg/m3.[732]

[724] See Section VI.B.i for discussion of the current $PM_{2.5}$ NAAQS standard, and *https://www.epa.gov/pm-pollution/national-ambient-air-quality-standards-naaqs-pm.*

[725] Garshick, Eric, Francine Laden, Jaime E. Hart, Mary E. Davis, Ellen A. Eisen, and Thomas J. Smith. 2012. Lung cancer and elemental carbon exposure in trucking industry workers. Environmental Health Perspectives 120(9): 1301–1306.

[726] Silverman, D.T., Samanic, C.M., Lubin, J.H., Blair, A.E., Stewart, P.A., Vermeulen, R., & Attfield, M.D. (2012). The diesel exhaust in miners study: a nested case–control study of lung cancer and diesel exhaust. Journal of the National Cancer Institute.

[727] Olsson, Ann C., et al. ''Exposure to diesel motor exhaust and lung cancer risk in a pooled analysis from case-control studies in Europe and Canada.'' American journal of respiratory and critical care medicine 183.7 (2011): 941–948.

[728] IARC [International Agency for Research on Cancer]. (2013). Diesel and gasoline engine exhausts and some nitroarenes. IARC Monographs Volume 105. Online at *http://monographs.iarc.fr/ENG/Monographs/vol105/index.php.*

[729] U.S. EPA (2022) Technical Support Document EPA Air Toxics Screening Assessment. 2017AirToxScreen TSD. *https://www.epa.gov/system/files/documents/2022-03/airtoxscreen_2017tsd.pdf.*

[730] U.S. EPA (2022) 2018 AirToxScreen Risk Drivers. *https://www.epa.gov/AirToxScreen/airtoxscreen-risk-drivers.*

[731] U.S. EPA (1991). Integrated Risk Information System File of Acetaldehyde. Research and Development, National Center for Environmental Assessment, Washington, DC. This material is available electronically at *https://cfpub.epa.gov/ncea/iris2/chemicalLanding.cfm?substance_nmbr=290.*

[732] U.S. EPA (1991). Integrated Risk Information System File of Acetaldehyde. This material is available electronically at *https://cfpub.epa.gov/ncea/iris2/chemicalLanding.cfm?substance_nmbr=290.*

Acetaldehyde is reasonably anticipated to be a human carcinogen by the NTP in the 14th Report on Carcinogens and is classified as possibly carcinogenic to humans (Group 2B) by the IARC.[733] [734]

The primary noncancer effects of exposure to acetaldehyde vapors include irritation of the eyes, skin, and respiratory tract.[735] In short-term (4 week) rat studies, degeneration of olfactory epithelium was observed at various concentration levels of acetaldehyde exposure.[736] [737] Data from these studies were used by EPA to develop an inhalation reference concentration of 9 μg/m^3. Some asthmatics have been shown to be a sensitive subpopulation to decrements in functional expiratory volume (FEV1 test) and bronchoconstriction upon acetaldehyde inhalation.[738] Children, especially those with diagnosed asthma, may be more likely to show impaired pulmonary function and symptoms of asthma than are adults following exposure to acetaldehyde.[739]

b. Acrolein

EPA most recently evaluated the toxicological and health effects literature related to acrolein in 2003 and concluded that the human carcinogenic potential of acrolein could not be determined because the available data were inadequate. No information was available on the carcinogenic effects of acrolein in humans, and the animal data provided inadequate evidence of carcinogenicity.[740] In 2021, the IARC classified acrolein as probably carcinogenic to humans.[741]

Lesions to the lungs and upper respiratory tract of rats, rabbits, and hamsters have been observed after subchronic exposure to acrolein.[742] The agency has developed an RfC for acrolein of 0.02 μg/m3 and an RfD of 0.5 μg/kg-day.[743]

Acrolein is extremely acrid and irritating to humans when inhaled, with acute exposure resulting in upper respiratory tract irritation, mucus hypersecretion and congestion. The intense irritancy of this carbonyl has been demonstrated during controlled tests in human subjects, who suffer intolerable eye and nasal mucosal sensory reactions within minutes of exposure.[744] These data and additional studies regarding acute effects of human exposure to acrolein are summarized in EPA's 2003 IRIS Human Health Assessment for acrolein.[745] Studies in humans indicate that levels as low as 0.09 ppm (0.21 mg/m^3) for five minutes may elicit subjective complaints of eye irritation with increasing concentrations leading to more extensive eye, nose and respiratory symptoms. Acute exposures in animal studies report bronchial hyper-responsiveness. Based on animal data (more pronounced respiratory irritancy in mice with allergic airway disease in comparison to non-diseased mice[746]) and demonstration of similar effects in humans (*e.g.,* reduction in respiratory rate), individuals with compromised respiratory function (*e.g.,* emphysema, asthma) are expected to be at increased risk of developing adverse responses to strong respiratory irritants such as acrolein. EPA does not currently have an acute reference concentration for acrolein. The available health effect reference values for acrolein have been summarized by EPA and include an ATSDR MRL for acute exposure to acrolein of 7 μg/m^3 for 1–14 days exposure and Reference Exposure Level (REL) values from the California Office of Environmental Health Hazard Assessment (OEHHA) for one-hour and 8-hour exposures of 2.5 μg/m^3 and 0.7 μg/m^3, respectively.[747]

c. Benzene

EPA's Integrated Risk Information System (IRIS) database lists benzene as a known human carcinogen (causing leukemia) by all routes of exposure and concludes that exposure is associated with additional health effects, including genetic changes in both humans and animals and increased proliferation of bone marrow cells in mice.[748] [749] [750] EPA states in its IRIS database that data indicate a causal relationship between benzene exposure and acute lymphocytic leukemia and suggest a relationship between benzene exposure and chronic non-lymphocytic leukemia and chronic lymphocytic leukemia. EPA's IRIS documentation for benzene also lists a range of 2.2×10^{-6} to 7.8×10^{-6} per μg/m^3 as the unit risk estimate (URE) for benzene.[751] [752] The

[733] NTP (National Toxicology Program). 2016. Report on Carcinogens, Fourteenth Edition.; Research Triangle Park, NC: U.S. Department of Health and Human Services, Public Health Service. *https://ntp.niehs.nih.gov/go/roc14.*

[734] International Agency for Research on Cancer (IARC). (1999). Re-evaluation of some organic chemicals, hydrazine, and hydrogen peroxide. IARC Monographs on the Evaluation of Carcinogenic Risk of Chemical to Humans, Vol 71. Lyon, France.

[735] U.S. EPA (1991). Integrated Risk Information System File of Acetaldehyde. This material is available electronically at *https://cfpub.epa.gov/ncea/iris2/chemicalLanding.cfm?substance_nmbr=290.*

[736] U.S. EPA. (2003). Integrated Risk Information System File of Acrolein. Research and Development, National Center for Environmental Assessment, Washington, DC. This material is available electronically at *https://cfpub.epa.gov/ncea/iris2/chemicalLanding.cfm?substance_nmbr=364.*

[737] Appleman, L.M., R.A. Woutersen, and V.J. Feron. (1982). Inhalation toxicity of acetaldehyde in rats. I. Acute and subacute studies. Toxicology. 23: 293–297.

[738] Myou, S.; Fujimura, M.; Nishi K.; Ohka, T.; and Matsuda, T. (1993). Aerosolized acetaldehyde induces histamine-mediated bronchoconstriction in asthmatics. Am. Rev. Respir.Dis.148(4 Pt 1): 940–943.

[739] California OEHHA, 2014. TSD for Noncancer RELs: Appendix D. Individual, Acute, 8-Hour, and Chronic Reference Exposure Level Summaries. December 2008 (updated July 2014). *https://oehha.ca.gov/media/downloads/crnr/appendixd1final.pdf.*

[740] U.S. EPA. (2003). Integrated Risk Information System File of Acrolein. Research and Development, National Center for Environmental Assessment, Washington, DC. This material is available at *https://iris.epa.gov/ChemicalLanding/&substance_nmbr=364.*

[741] International Agency for Research on Cancer (IARC). (2021). Monographs on the Identification of Carcinogenic Hazards to humans, Volume 128. Acrolein, Crotonaldehyde, and Arecoline, World Health Organization, Lyon, France.

[742] U.S. EPA. (2003). Integrated Risk Information System File of Acrolein. Office of Research and Development, National Center for Environmental Assessment, Washington, DC. This material is available at *http://www.epa.gov/iris/subst/0364.htm.*

[743] U.S. EPA. (2003). Integrated Risk Information System File of Acrolein. Office of Research and Development, National Center for Environmental Assessment, Washington, DC. This material is available at *https://iris.epa.gov/ChemicalLanding/&substance_nmbr=364.*

[744] U.S. EPA. (2003). Toxicological review of acrolein in support of summary information on Integrated Risk Information System (IRIS) National Center for Environmental Assessment, Washington, DC. EPA/635/R–03/003. p. 10. Available online at: *https://iris.epa.gov/static/pdfs/0364tr.pdf.*

[745] U.S. EPA. (2003). Toxicological review of acrolein in support of summary information on Integrated Risk Information System (IRIS) National Center for Environmental Assessment, Washington, DC. EPA/635/R–03/003. Available online at: *https://iris.epa.gov/static/pdfs/0364tr.pdf.*

[746] Morris JB, Symanowicz PT, Olsen JE, et al. (2003). Immediate sensory nerve-mediated respiratory responses to irritants in healthy and allergic airway-diseased mice. J Appl Physiol 94(4):1563–1571.

[747] U.S. EPA. (2009). Graphical Arrays of Chemical-Specific Health Effect Reference Values for Inhalation Exposures (Final Report). U.S. Environmental Protection Agency, Washington, DC, EPA/600/R–09/061, 2009. *http://cfpub.epa.gov/ncea/cfm/recordisplay.cfm?deid=211003.*

[748] U.S. EPA. (2000). Integrated Risk Information System File for Benzene. This material is available electronically at: *https://cfpub.epa.gov/ncea/iris2/chemicalLanding.cfm?substance_nmbr=276.*

[749] International Agency for Research on Cancer. (1982). IARC monographs on the evaluation of carcinogenic risk of chemicals to humans, Volume 29, Some industrial chemicals and dyestuffs, International Agency for Research on Cancer, World Health Organization, Lyon, France 1982.

[750] Irons, R.D.; Stillman, W.S.; Colagiovanni, D.B.; Henry, V.A. (1992). Synergistic action of the benzene metabolite hydroquinone on myelopoietic stimulating activity of granulocyte/macrophage colony-stimulating factor in vitro, Proc. Natl. Acad. Sci. 89:3691–3695.

[751] A unit risk estimate is defined as the increase in the lifetime risk of cancer of an individual who is exposed for a lifetime to 1 μg/m^3 benzene in air.

[752] U.S. EPA. (2000). Integrated Risk Information System File for Benzene. This material is available electronically at: *https://cfpub.epa.gov/ncea/iris2/chemicalLanding.cfm?substance_nmbr=276.*

International Agency for Research on Cancer (IARC) has determined that benzene is a human carcinogen, and the U.S. Department of Health and Human Services (DHHS) has characterized benzene as a known human carcinogen.[753] [754]

A number of adverse noncancer health effects, including blood disorders such as preleukemia and aplastic anemia, have also been associated with long-term exposure to benzene.[755] [756] The most sensitive noncancer effect observed in humans, based on current data, is the depression of the absolute lymphocyte count in blood.[757] [758] EPA's inhalation reference concentration (RfC) for benzene is 30 μg/m^3. The RfC is based on suppressed absolute lymphocyte counts seen in humans under occupational exposure conditions. In addition, studies sponsored by the Health Effects Institute (HEI) provide evidence that biochemical responses occur at lower levels of benzene exposure than previously known.[759] [760] [761] [762] EPA's IRIS program has not yet evaluated these new data. EPA does not currently have an acute reference concentration for benzene. The Agency for Toxic Substances and Disease Registry (ATSDR) Minimal Risk Level (MRL) for acute inhalation exposure to benzene is 29 μg/m^3 for 1–14 days exposure.[763] [764]

There is limited information from two studies regarding an increased risk of adverse effects to children whose parents have been occupationally exposed to benzene.[765] [766] Data from animal studies have shown benzene exposures result in damage to the hematopoietic (blood cell formation) system during development.[767] [768] [769] Also, key changes related to the development of childhood leukemia occur in the developing fetus.[770] Several studies have reported that genetic changes related to eventual leukemia development occur before birth. For example, there is one study of genetic changes in twins who developed T cell leukemia at nine years of age.[771]

d. 1,3-Butadiene

EPA has characterized 1,3-butadiene as carcinogenic to humans by inhalation.[772] [773] The IARC has determined that 1,3-butadiene is a human carcinogen, and the U.S. DHHS has characterized 1,3-butadiene as a known human carcinogen.[774] [775] [776] [777] There are numerous studies consistently demonstrating that 1,3-butadiene is metabolized into genotoxic metabolites by experimental animals and humans. The specific mechanisms of 1,3-butadiene-induced carcinogenesis are unknown; however, the scientific evidence strongly suggests that the carcinogenic effects are mediated by genotoxic metabolites. Animal data suggest that females may be more sensitive than males for cancer effects associated with 1,3-butadiene exposure; there are insufficient data in humans from which to draw conclusions about sensitive subpopulations. The URE for 1,3-butadiene is 3×10^{-5} per μg/m^3.[778] 1,3-butadiene also causes a variety of reproductive and developmental effects in mice; no human data on these effects are available. The most sensitive effect was ovarian atrophy observed in a lifetime bioassay of female mice.[779] Based on this critical effect and the benchmark concentration methodology, an RfC for chronic health effects was

[753] International Agency for Research on Cancer (IARC, 2018. Monographs on the evaluation of carcinogenic risks to humans, volume 120. World Health Organization—Lyon, France. *http://publications.iarc.fr/Book-And-Report-Series/Iarc-Monographs-On-The-Identification-Of-Carcinogenic-Hazards-To-Humans/Benzene-2018*.

[754] NTP (National Toxicology Program). 2016. Report on Carcinogens, Fourteenth Edition.; Research Triangle Park, NC: U.S. Department of Health and Human Services, Public Health Service. *https://ntp.niehs.nih.gov/go/roc14*.

[755] Aksoy, M. (1989). Hematotoxicity and carcinogenicity of benzene. Environ. Health Perspect. 82: 193–197. EPA–HQ–OAR–2011–0135.

[756] Goldstein, B.D. (1988). Benzene toxicity. Occupational medicine. State of the Art Reviews. 3: 541–554.

[757] Rothman, N., G.L. Li, M. Dosemeci, W.E. Bechtold, G.E. Marti, Y.Z. Wang, M. Linet, L.Q. Xi, W. Lu, M.T. Smith, N. Titenko-Holland, L.P. Zhang, W. Blot, S.N. Yin, and R.B. Hayes. (1996). Hematotoxicity among Chinese workers heavily exposed to benzene. Am. J. Ind. Med. 29: 236–246.

[758] U.S. EPA (2002). Toxicological Review of Benzene (Noncancer Effects). Environmental Protection Agency, Integrated Risk Information System (IRIS), Research and Development, National Center for Environmental Assessment, Washington DC. This material is available electronically at *https://cfpub.epa.gov/ncea/iris/iris_documents/documents/toxreviews/0276tr.pdf*.

[759] Qu, O.; Shore, R.; Li, G.; Jin, X.; Chen, C.L.; Cohen, B.; Melikian, A.; Eastmond, D.; Rappaport, S.; Li, H.; Rupa, D.; Suramaya, R.; Songnian, W.; Huifant, Y.; Meng, M.; Winnik, M.; Kwok, E.; Li, Y.; Mu, R.; Xu, B.; Zhang, X.; Li, K. (2003). HEI Report 115, Validation & Evaluation of Biomarkers in Workers Exposed to Benzene in China.

[760] Qu, Q., R. Shore, G. Li, X. Jin, L.C. Chen, B. Cohen, et al. (2002). Hematological changes among Chinese workers with a broad range of benzene exposures. Am. J. Industr. Med. 42: 275–285.

[761] Lan, Qing, Zhang, L., Li, G., Vermeulen, R., et al. (2004). Hematotoxically in Workers Exposed to Low Levels of Benzene. Science 306: 1774–1776.

[762] Turtletaub, K.W. and Mani, C. (2003). Benzene metabolism in rodents at doses relevant to human exposure from Urban Air. Research Reports Health Effect Inst. Report No.113.

[763] U.S. Agency for Toxic Substances and Disease Registry (ATSDR). (2007). Toxicological profile for benzene. Atlanta, GA: U.S. Department of Health and Human Services, Public Health Service. *http://www.atsdr.cdc.gov/ToxProfiles/tp3.pdf*.

[764] A minimal risk level (MRL) is defined as an estimate of the daily human exposure to a hazardous substance that is likely to be without appreciable risk of adverse noncancer health effects over a specified duration of exposure.

[765] Corti, M; Snyder, CA. (1996) Influences of gender, development, pregnancy and ethanol consumption on the hematotoxicity of inhaled 10 ppm benzene. Arch Toxicol 70:209–217.

[766] McKinney P.A.; Alexander, F.E.; Cartwright, R.A.; et al. (1991) Parental occupations of children with leukemia in west Cumbria, north Humberside, and Gateshead. Br Med J 302:681–686.

[767] Keller, KA; Snyder, CA. (1986) Mice exposed in utero to low concentrations of benzene exhibit enduring changes in their colony forming hematopoietic cells. Toxicology 42:171–181.

[768] Keller, KA; Snyder, CA. (1988) Mice exposed in utero to 20 ppm benzene exhibit altered numbers of recognizable hematopoietic cells up to seven weeks after exposure. Fundam Appl Toxicol 10:224–232.

[769] Corti, M; Snyder, CA. (1996) Influences of gender, development, pregnancy and ethanol consumption on the hematotoxicity of inhaled 10 ppm benzene. Arch Toxicol 70:209–217.

[770] U.S. EPA. (2002). Toxicological Review of Benzene (Noncancer Effects). National Center for Environmental Assessment, Washington, DC. Report No. EPA/635/R–02/001F. *https://cfpub.epa.gov/ncea/iris/iris_documents/documents/toxreviews/0276tr.pdf*.

[771] Ford, AM; Pombo-de-Oliveira, MS; McCarthy, KP; MacLean, JM; Carrico, KC; Vincent, RF; Greaves, M. (1997) Monoclonal origin of concordant T-cell malignancy in identical twins. Blood 89:281–285.

[772] U.S. EPA. (2002). Health Assessment of 1,3-Butadiene. Office of Research and Development, National Center for Environmental Assessment, Washington Office, Washington, DC. Report No. EPA600–P–98–001F. This document is available electronically at *https://cfpub.epa.gov/ncea/iris_drafts/recordisplay.cfm?deid=54499*.

[773] U.S. EPA. (2002) ''Full IRIS Summary for 1,3-butadiene (CASRN 106–99–0)'' Environmental Protection Agency, Integrated Risk Information System (IRIS), Research and Development, National Center for Environmental Assessment, Washington, DC *https://cfpub.epa.gov/ncea/iris2/chemicalLanding.cfm?substance_nmbr=139*.

[774] International Agency for Research on Cancer (IARC). (1999). Monographs on the evaluation of carcinogenic risk of chemicals to humans, Volume 71, Re-evaluation of some organic chemicals, hydrazine and hydrogen peroxide, World Health Organization, Lyon, France.

[775] International Agency for Research on Cancer (IARC). (2008). Monographs on the evaluation of carcinogenic risk of chemicals to humans, 1,3-Butadiene, Ethylene Oxide and Vinyl Halides (Vinyl Fluoride, Vinyl Chloride and Vinyl Bromide) Volume 97, World Health Organization, Lyon, France.

[776] NTP (National Toxicology Program). 2016. Report on Carcinogens, Fourteenth Edition.; Research Triangle Park, NC: U.S. Department of Health and Human Services, Public Health Service. *https://ntp.niehs.nih.gov/go/roc14*.

[777] International Agency for Research on Cancer (IARC). (2012). Monographs on the evaluation of carcinogenic risk of chemicals to humans, Volume 100F chemical agents and related occupations, World Health Organization, Lyon, France.

[778] U.S. EPA. (2002). ''Full IRIS Summary for 1,3-butadiene (CASRN 106–99–0)'' Environmental Protection Agency, Integrated Risk Information System (IRIS), Research and Development, National Center for Environmental Assessment, Washington, DC *https://cfpub.epa.gov/ncea/iris2/chemicalLanding.cfm?substance_nmbr=139*.

[779] Bevan, C.; Stadler, J.C.; Elliot, G.S.; et al. (1996). Subchronic toxicity of 4-vinylcyclohexene in rats and mice by inhalation. Fundam. Appl. Toxicol. 32:1–10.

calculated at 0.9 ppb (approximately 2 μg/m^3).

e. Ethylbenzene

EPA's inhalation RfC for ethylbenzene is 1 mg/m3. This conclusion on a weight of evidence determination and RfC is contained in the 1991 IRIS file for ethylbenzene.[780] The RfC is based on developmental effects. A study in rabbits found reductions in live rabbit kits per litter at 1000 ppm. In addition, a study on rats found an increased incidence of supernumerary and rudimentary ribs at 1000 ppm and elevated incidence of extra ribs at 100 ppm. In 1988, EPA concluded that data were inadequate to give a weight of evidence characterization for carcinogenic effects. EPA released an IRIS Assessment Plan for Ethylbenzene in 2017,[781] and EPA will be releasing the Systematic Review Protocol for ethylbenzene in 2023.[782]

California EPA completed a cancer risk assessment for ethylbenzene in 2007 and developed an inhalation unit risk estimate of 2.5×10^{-6}.[783] This value was based on incidence of kidney cancer in male rats. California EPA also developed a chronic inhalation noncancer reference exposure level (REL) of 2000 μg/m^3, based on nephrotoxicity and body weight reduction in rats, liver cellular alterations, necrosis in mice, and hyperplasia of the pituitary gland in mice.[784]

ATSDR developed a chronic inhalation Minimal Risk Level (MRL) for ethylbenzene of 0.06 ppm based on renal effects and an acute MRL of 5 ppm based on auditory effects.

f. Formaldehyde

In 1991, EPA concluded that formaldehyde is a Class B1 probable human carcinogen based on limited evidence in humans and sufficient evidence in animals.[785] An inhalation URE for cancer and a reference dose for oral noncancer effects were developed by EPA and posted on the IRIS database. Since that time, the NTP and IARC have concluded that formaldehyde is a known human carcinogen.[786] [787] [788]

The conclusions by IARC and NTP reflect the results of epidemiologic research published since 1991 in combination with previous animal, human and mechanistic evidence. Research conducted by the National Cancer Institute reported an increased risk of nasopharyngeal cancer and specific lymphohematopoietic malignancies among workers exposed to formaldehyde.[789] [790] [791] A National Institute of Occupational Safety and Health study of garment workers also reported increased risk of death due to leukemia among workers exposed to formaldehyde.[792] Extended follow-up of a cohort of British chemical workers did not report evidence of an increase in nasopharyngeal or lymphohematopoietic cancers, but a continuing statistically significant excess in lung cancers was reported.[793] Finally, a study of embalmers reported formaldehyde exposures to be associated with an increased risk of myeloid leukemia but not brain cancer.[794]

Health effects of formaldehyde in addition to cancer were reviewed by the Agency for Toxics Substances and Disease Registry in 1999, supplemented in 2010, and by the World Health Organization.[795] [796] [797] These organizations reviewed the scientific literature concerning health effects linked to formaldehyde exposure to evaluate hazards and dose response relationships and defined exposure concentrations for minimal risk levels (MRLs). The health endpoints reviewed included sensory irritation of eyes and respiratory tract, reduced pulmonary function, nasal histopathology, and immune system effects. In addition, research on reproductive and developmental effects and neurological effects was discussed along with several studies that suggest that formaldehyde may increase the risk of asthma—particularly in the young.

In June 2010, EPA released a draft Toxicological Review of Formaldehyde—Inhalation Assessment through the IRIS program for peer review by the National Research Council (NRC) and public comment.[798] That draft assessment reviewed more recent research from animal and human studies on cancer and other health effects. The NRC released their review report in April 2011.[799] EPA's draft assessment, which addresses NRC recommendations, was suspended in 2018.[800] The draft assessment was unsuspended in March 2021, and an external review draft was released in

[780] U.S. EPA. (1991). Integrated Risk Information System File for Ethylbenzene. This material is available electronically at: *https://iris.epa.gov/ChemicalLanding/&substance_nmbr=51*.

[781] U.S. EPA (2017). IRIS Assessment Plan for Ethylbenzene. EPA/635/R–17/332. This document is available electronically at: *https://cfpub.epa.gov/ncea/iris_drafts/recordisplay.cfm?deid=337468*.

[782] U.S. EPA (2022). IRIS Program Outlook. June, 2022. This material is available electronically at: *https://www.epa.gov/system/files/documents/2022-06/IRIS%20Program%20Outlook_June22.pdf*.

[783] California OEHHA, 2007. Adoption of a Unit Risk Value for Ethylbenzene. This material is available electronically at: *https://oehha.ca.gov/air/report-hot-spots/adoption-unit-risk-value-ethylbenzene*.

[784] California OEHHA, 2008. Technical Supporting Document for Noncancer RELs, Appendix D3. This material is available electronically at: *https://oehha.ca.gov/media/downloads/crnr/appendixd3final.pdf*.

[785] EPA. Integrated Risk Information System. Formaldehyde (CASRN 50–00–0) *https://cfpub.epa.gov/ncea/iris2/chemicalLanding.cfm?substance_nmbr=419*.

[786] NTP (National Toxicology Program). 2016. Report on Carcinogens, Fourteenth Edition.; Research Triangle Park, NC: U.S. Department of Health and Human Services, Public Health Service. *https://ntp.niehs.nih.gov/go/roc14*.

[787] IARC Monographs on the Evaluation of Carcinogenic Risks to Humans Volume 88 (2006): Formaldehyde, 2-Butoxyethanol and 1-tert-Butoxypropan-2-ol.

[788] IARC Monographs on the Evaluation of Carcinogenic Risks to Humans Volume 100F (2012): Formaldehyde.

[789] Hauptmann, M.; Lubin, J. H.; Stewart, P. A.; Hayes, R. B.; Blair, A. 2003. Mortality from lymphohematopoetic malignancies among workers in formaldehyde industries. Journal of the National Cancer Institute 95: 1615–1623.

[790] Hauptmann, M.; Lubin, J. H.; Stewart, P. A.; Hayes, R. B.; Blair, A. 2004. Mortality from solid cancers among workers in formaldehyde industries. American Journal of Epidemiology 159: 1117–1130.

[791] Beane Freeman, L. E.; Blair, A.; Lubin, J. H.; Stewart, P. A.; Hayes, R. B.; Hoover, R. N.; Hauptmann, M. 2009. Mortality from lymphohematopoietic malignancies among workers in formaldehyde industries: The National Cancer Institute cohort. J. National Cancer Inst. 101: 751–761.

[792] Pinkerton, L. E. 2004. Mortality among a cohort of garment workers exposed to formaldehyde: an update. Occup. Environ. Med. 61: 193–200.

[793] Coggon, D, EC Harris, J Poole, KT Palmer. 2003. Extended follow-up of a cohort of British chemical workers exposed to formaldehyde. J National Cancer Inst. 95:1608–1615.

[794] Hauptmann, M.; Stewart P. A.; Lubin J. H.; Beane Freeman, L. E.; Hornung, R. W.; Herrick, R. F.; Hoover, R. N.; Fraumeni, J. F.; Hayes, R. B. 2009. Mortality from lymphohematopoietic malignancies and brain cancer among embalmers exposed to formaldehyde. Journal of the National Cancer Institute 101:1696–1708.

[795] ATSDR. 1999. Toxicological Profile for Formaldehyde, U.S. Department of Health and Human Services (HHS), July 1999.

[796] ATSDR. 2010. Addendum to the Toxicological Profile for Formaldehyde. U.S. Department of Health and Human Services (HHS), October 2010.

[797] IPCS. 2002. Concise International Chemical Assessment Document 40. Formaldehyde. World Health Organization.

[798] EPA (U.S. Environmental Protection Agency). 2010. Toxicological Review of Formaldehyde (CAS No. 50–00–0)—Inhalation Assessment: In Support of Summary Information on the Integrated Risk Information System (IRIS). External Review Draft. EPA/635/R–10/002A. U.S. Environmental Protection Agency, Washington DC [online]. Available: *http://cfpub.epa.gov/ncea/iris_drafts/recordisplay.cfm?deid=223614*.

[799] NRC (National Research Council). 2011. Review of the Environmental Protection Agency's Draft IRIS Assessment of Formaldehyde. Washington DC: National Academies Press. *http://books.nap.edu/openbook.php?record_id=13142*.

[800] U.S. EPA (2018). See *https://cfpub.epa.gov/ncea/iris2/chemicalLanding.cfm?substance_nmbr=419*.

April 2022.[801] This draft assessment is now undergoing review by the National Academy of Sciences.[802]

g. Naphthalene

Naphthalene is found in small quantities in gasoline and diesel fuels. Naphthalene emissions have been measured in larger quantities in both gasoline and diesel exhaust compared with evaporative emissions from mobile sources, indicating it is primarily a product of combustion.

Acute (short-term) exposure of humans to naphthalene by inhalation, ingestion, or dermal contact is associated with hemolytic anemia and damage to the liver and the nervous system.[803] Chronic (long term) exposure of workers and rodents to naphthalene has been reported to cause cataracts and retinal damage.[804] Children, especially neonates, appear to be more susceptible to acute naphthalene poisoning based on the number of reports of lethal cases in children and infants (hypothesized to be due to immature naphthalene detoxification pathways).[805] EPA released an external review draft of a reassessment of the inhalation carcinogenicity of naphthalene based on a number of recent animal carcinogenicity studies.[806] The draft reassessment completed external peer review.[807] Based on external peer review comments received, EPA is developing a revised draft assessment that considers inhalation and oral routes of exposure, as well as cancer and noncancer effects.[808] The external review draft does not represent official agency opinion and was released solely for the purposes of external peer review and public comment. The NTP listed naphthalene as ''reasonably anticipated to be a human carcinogen'' in 2004 on the basis of bioassays reporting clear evidence of carcinogenicity in rats and some evidence of carcinogenicity in mice.[809] California EPA has released a new risk assessment for naphthalene, and the IARC has reevaluated naphthalene and re-classified it as Group 2B: possibly carcinogenic to humans.[810]

Naphthalene also causes a number of non-cancer effects in animals following chronic and less-than-chronic exposure, including abnormal cell changes and growth in respiratory and nasal tissues.[811] The current EPA IRIS assessment includes noncancer data on hyperplasia and metaplasia in nasal tissue that form the basis of the inhalation RfC of 3 μg/m3.[812] The ATSDR MRL for acute and intermediate duration oral exposure to naphthalene is 0.6 mg/kg/day based on maternal toxicity in a developmental toxicology study in rats.[813] ATSDR also derived an ad hoc reference value of 6 × 10–2 mg/m3 for acute (≤24-hour) inhalation exposure to naphthalene in a Letter Health Consultation dated March 24, 2014 to address a potential exposure concern in Illinois.[814] The ATSDR acute inhalation reference value was based on a qualitative identification of an exposure level interpreted not to cause pulmonary lesions in mice. More recently, EPA developed acute RfCs for 1-, 8-, and 24-hour exposure scenarios; the ≤24-hour reference value is 2 × 10×2 mg/m3.[815] EPA's acute RfCs are based on a systematic review of the literature, benchmark dose modeling of naphthalene-induced nasal lesions in rats, and application of a PBPK (physiologically based pharmacokinetic) model.

viii. Exposure and Health Effects Associated With Traffic

Locations in close proximity to major roadways generally have elevated concentrations of many air pollutants emitted from motor vehicles. Hundreds of studies have been published in peer-reviewed journals, concluding that concentrations of CO, CO_2, NO, NO_2, benzene, aldehydes, particulate matter, black carbon, and many other compounds are elevated in ambient air within approximately 300–600 meters (about 1,000–2,000 feet) of major roadways. The highest concentrations of most pollutants emitted directly by motor vehicles are found at locations within 50 meters (about 165 feet) of the edge of a roadway's traffic lanes.

A large-scale review of air quality measurements in the vicinity of major roadways between 1978 and 2008 concluded that the pollutants with the steepest concentration gradients in vicinities of roadways were CO, ultrafine particles, metals, elemental carbon (EC), NO, NO_X, and several VOCs.[816] These pollutants showed a large reduction in concentrations within 100 meters downwind of the roadway. Pollutants that showed more gradual reductions with distance from roadways included benzene, NO2, $PM_{2.5}$, and PM_{10}. In reviewing the literature, Karner et al., (2010) reported that results varied based on the method of statistical analysis used to determine the gradient

[801] U.S. EPA. IRIS Toxicological Review of Formaldehyde-Inhalation (Interagency Science Consultation Draft, 2021). U.S. Environmental Protection Agency, Washington, DC, EPA/635/R–21/286, 2021.

[802] For additional information, see: *https://www.nationalacademies.org/our-work/review-of-epas-2021-draft-formaldehyde-assessment.*

[803] U.S. EPA. 1998. Toxicological Review of Naphthalene (Reassessment of the Inhalation Cancer Risk), Environmental Protection Agency, Integrated Risk Information System, Research and Development, National Center for Environmental Assessment, Washington, DC. This material is available electronically at *https://cfpub.epa.gov/ncea/iris_drafts/recordisplay.cfm?deid=56434.*

[804] U.S. EPA. 1998. Toxicological Review of Naphthalene (Reassessment of the Inhalation Cancer Risk), Environmental Protection Agency, Integrated Risk Information System, Research and Development, National Center for Environmental Assessment, Washington, DC. This material is available electronically at *https://cfpub.epa.gov/ncea/iris_drafts/recordisplay.cfm?deid=56434.*

[805] U.S. EPA. (1998). Toxicological Review of Naphthalene (Reassessment of the Inhalation Cancer Risk), Environmental Protection Agency, Integrated Risk Information System, Research and Development, National Center for Environmental Assessment, Washington, DC. This material is available electronically at *https://cfpub.epa.gov/ncea/iris_drafts/recordisplay.cfm?deid=56434.*

[806] U.S. EPA. (1998). Toxicological Review of Naphthalene (Reassessment of the Inhalation Cancer Risk), Environmental Protection Agency, Integrated Risk Information System, Research and Development, National Center for Environmental Assessment, Washington, DC. This material is available electronically at *https://cfpub.epa.gov/ncea/iris_drafts/recordisplay.cfm?deid=56434.*

[807] Oak Ridge Institute for Science and Education. (2004). External Peer Review for the IRIS Reassessment of the Inhalation Carcinogenicity of Naphthalene. August 2004. *http://cfpub.epa.gov/ncea/cfm/recordisplay.cfm?deid=84403.*

[808] U.S. EPA. (2018) See: *https://cfpub.epa.gov/ncea/iris2/chemicalLanding.cfm?substance_nmbr=436.*

[809] NTP (National Toxicology Program). 2016. Report on Carcinogens, Fourteenth Edition.; Research Triangle Park, NC: U.S. Department of Health and Human Services, Public Health Service. *https://ntp.niehs.nih.gov/go/roc14.*

[810] International Agency for Research on Cancer (IARC). (2002). Monographs on the Evaluation of the Carcinogenic Risk of Chemicals for Humans. Vol. 82. Lyon, France.

[811] U. S. EPA. (1998). Toxicological Review of Naphthalene, Environmental Protection Agency, Integrated Risk Information System, Research and Development, National Center for Environmental Assessment, Washington, DC. This material is available electronically at *https://cfpub.epa.gov/ncea/iris_drafts/recordisplay.cfm?deid=56434.*

[812] U.S. EPA. (1998). Toxicological Review of Naphthalene. Environmental Protection Agency, Integrated Risk Information System (IRIS), Research and Development, National Center for Environmental Assessment, Washington, DC *https://cfpub.epa.gov/ncea/iris_drafts/recordisplay.cfm?deid=56434.*

[813] ATSDR. Toxicological Profile for Naphthalene, 1-Methylnaphthalene, and 2-Methylnaphthalene (2005). *https://www.atsdr.cdc.gov/ToxProfiles/tp67-p.pdf.*

[814] ATSDR. Letter Health Consultation, Radiac Abrasives, Inc., Chicago, Illinois (2014). *https://www.atsdr.cdc.gov/HAC/pha/RadiacAbrasives/Radiac%20Abrasives,%20Inc.%20_%20LHC%20(Final)%20_%2003–24-2014%20(2)_508.pdf.*

[815] U. S. EPA. Derivation of an acute reference concentration for inhalation exposure to naphthalene. Report No. EPA/600/R–21/292. *https://cfpub.epa.gov/ncea/risk/recordisplay.cfm?deid=355035.*

[816] Karner, A.A.; Eisinger, D.S.; Niemeier, D.A. (2010). Near-roadway air quality: synthesizing the findings from real-world data. Environ Sci Technol 44: 5334–5344.

in pollutant concentration. More recent studies continue to show significant concentration gradients of traffic-related air pollution around major roads.[817 818 819 820 821; 822 823 824] There is evidence that EPA's regulations for vehicles have lowered the near-road concentrations and gradients.[825] Starting in 2010, EPA required through the NAAQS process that air quality monitors be placed near high-traffic roadways for determining concentrations of CO, NO2, and $PM_{2.5}$ (in addition to those existing monitors located in neighborhoods and other locations farther away from pollution sources). The monitoring data for NO2 indicate that in urban areas, monitors near roadways often report the highest concentrations of NO2.[826] More recent studies of traffic-related air pollutants continue to report sharp gradients around roadways, particularly within several hundred meters.[827 828]

For pollutants with relatively high background concentrations relative to near-road concentrations, detecting concentration gradients can be difficult. For example, many carbonyls have high background concentrations as a result of photochemical breakdown of precursors from many different organic compounds. However, several studies have measured carbonyls in multiple weather conditions and found higher concentrations of many carbonyls downwind of roadways.[829 830] These findings suggest a substantial roadway source of these carbonyls.

In the past 30 years, many studies have been published with results reporting that populations who live, work, or go to school near high-traffic roadways experience higher rates of numerous adverse health effects, compared to populations far away from major roads.[831] In addition, numerous studies have found adverse health effects associated with spending time in traffic, such as commuting or walking along high-traffic roadways, including studies among children.[832 833 834 835] The health outcomes with the strongest evidence linking them with traffic-associated air pollutants are respiratory effects, particularly in asthmatic children, and cardiovascular effects.

Numerous reviews of this body of health literature have been published. In a 2022 final report, an expert panel of the Health Effects Institute (HEI) employed a systematic review focusing on selected health endpoints related to exposure to traffic-related air pollution.[836] The HEI panel concluded that there was a high level of confidence in evidence between long-term exposure to traffic-related air pollution and health effects in adults, including all-cause, circulatory, and ischemic heart disease mortality.[837] The panel also found that there is a moderate-to-high level of confidence in evidence of associations with asthma onset and acute respiratory infections in children and lung cancer and asthma onset in adults. This report follows on an earlier expert review published by HEI in 2010, where it found strongest evidence for asthma-related traffic impacts. Other literature reviews have been published with conclusions generally similar to the HEI panels'.[838 839 840 841] Additionally, in

[817] McDonald, B.C.; McBride, Z.C.; Martin, E.W.; Harley, R.A. (2014) High-resolution mapping of motor vehicle carbon dioxide emissions. J. Geophys. Res.Atmos.,119, 5283–5298, doi:10.1002/2013JD021219.

[818] Kimbrough, S.; Baldauf, R.W.; Hagler, G.S.W.; Shores, R.C.; Mitchell, W.; Whitaker, D.A.; Croghan, C.W.; Vallero, D.A. (2013) Long-term continuous measurement of near-road air pollution in Las Vegas: seasonal variability in traffic emissions impact on air quality. Air Qual Atmos Health 6: 295–305. DOI 10.1007/s11869–012–0171-x.

[819] Kimbrough, S.; Palma, T.; Baldauf, R.W. (2014) Analysis of mobile source air toxics (MSATs)—Near-road VOC and carbonyl concentrations. Journal of the Air &Waste Management Association, 64:3, 349–359, DOI: 10.1080/10962247.2013.863814.

[820] Kimbrough, S.; Owen, R.C.; Snyder, M.; Richmond-Bryant, J. (2017) NO to NO_2 Conversion Rate Analysis and Implications for Dispersion Model Chemistry Methods using Las Vegas, Nevada Near-Road Field Measurements. Atmos Environ 165: 23–24.

[821] Hilker, N.; Wang, J.W.; Jong, C–H.; Healy, R.M.; Sofowote, U.; Debosz, J.; Su, Y.; Noble, M.; Munoz, A.; Doerkson, G.; White, L.; Audette, C.; Herod, D.; Brook, J.R.; Evans, G.J. (2019) Traffic-related air pollution near roadways: discerning local impacts from background. Atmos. Meas. Tech., 12, 5247–5261. *https://doi.org/10.5194/amt-12-5247-2019*.

[822] Grivas, G.; Stavroulas, I.; Liakakou, E.; Kaskaoutis, D.G.; Bougiatioti, A.; Paraskevopoulou, D.; Gerasopoulos, E.; Mihalopoulos, N. (2019) Measuring the spatial variability of black carbon in Athens during wintertime. Air Quality, Atmosphere & Health (2019) 12:1405–1417. *https://doi.org/10.1007/s11869-019-00756-y*.

[823] Apte, J.S.; Messier, K.P.; Gani, S.; Brauer, M.; Kirchstetter, T.W.; Lunden, M.M.; Marshall, J.D.; Portier, C.J.; Vermeulen, R.C.H.; Hamburg, S.P. (2017) High-Resolution Air Pollution Mapping with Google Street View Cars: Exploiting Big Data. Environ Sci Technol 51: 6999–7008. *https://doi.org/10.1021/acs.est.7b00891*.

[824] Dabek-Zlotorzynska, E.; Celo, V.; Ding, L.; Herod, D.; Jeong, C–H.; Evans, G.; Hilker, N. (2019) Characteristics and sources of $PM_{2.5}$ and reactive gases near roadways in two metropolitan areas in Canada. Atmos Environ 218: 116980. *https://doi.org/10.1016/j.atmosenv.2019.116980*.

[825] Sarnat, J.A.; Russell, A.; Liang, D.; Moutinho, J.L; Golan, R.; Weber, R.; Gao, D.; Sarnat, S.; Chang, H.H.; Greenwald, R.; Yu, T. (2018) Developing Multipollutant Exposure Indicators of Traffic Pollution: The Dorm Room Inhalation to Vehicle Emissions (DRIVE) Study. Health Effects Institute Research Report Number 196. [Online at: *https://www.healtheffects.org/publication/developing-multipollutant-exposure-indicators-traffic-pollution-dorm-room-inhalation*].

[826] Gantt, B; Owen, R.C.; Watkins, N. (2021) Characterizing nitrogen oxides and fine particulate matter near major highways in the United States using the National Near-road Monitoring Network. Environ Sci Technol 55: 2831–2838. [Online at *https://doi.org/10.1021/acs.est.0c05851*].

[827] Apte, J.S.; Messier, K.P.; Gani, S.; Brauer, M.; Kirchstetter, T.W.; Lunden, M.M.; Marshall, J.D.; Portier, C.J.; Vermeulen, R.C.H.; Hamburg, S.P. (2017) High-Resolution Air Pollution Mapping with Google Street View Cars: Exploiting Big Data. Environ Sci Technol 51: 6999–7008. *https://doi.org/10.1021/acs.est.7b00891*.

[828] Gu, P.; Li, H.Z.; Ye, Q.; et al. (2018) Intercity variability of particulate matter is driven by carbonaceous sources and correlated with land-use variables. Environ Sci Technol 52: 52: 11545–11554. [Online at *http://dx.doi.org/10.1021/acs.est.8b03833*].

[829] Liu, W.; Zhang, J.; Kwon, J.l; et l. (2006). Concentrations and source characteristics of airborne carbonyl compounds measured outside urban residences. J Air Waste Manage Assoc 56: 1196–1204.

[830] Cahill, T.M.; Charles, M.J.; Seaman, V.Y. (2010). Development and application of a sensitive method to determine concentrations of acrolein and other carbonyls in ambient air. Health Effects Institute Research Report 149. Available at *https://www.healtheffects.org/system/files/Cahill149.pdf*.

[831] In the widely used PubMed database of health publications, between January 1, 1990 and December 31, 2021, 1,979 publications contained the keywords ''traffic, pollution, epidemiology,'' with approximately half the studies published after 2015.

[832] Laden, F.; Hart, J.E.; Smith, T.J.; Davis, M.E.; Garshick, E. (2007) Cause-specific mortality in the unionized U.S. trucking industry. Environmental Health Perspect 115:1192–1196.

[833] Peters, A.; von Klot, S.; Heier, M.; Trentinaglia, I.; Hörmann, A.; Wichmann, H.E.; Löwel, H. (2004) Exposure to traffic and the onset of myocardial infarction. New England J Med 351: 1721–1730.

[834] Zanobetti, A.; Stone, P.H.; Spelzer, F.E.; Schwartz, J.D.; Coull, B.A.; Suh, H.H.; Nearling, B.D.; Mittleman, M.A.; Verrier, R.L.; Gold, D.R. (2009) T-wave alternans, air pollution and traffic in high-risk subjects. Am J Cardiol 104: 665–670.

[835] Adar, S.; Adamkiewicz, G.; Gold, D.R.; Schwartz, J.; Coull, B.A.; Suh, H. (2007) Ambient and microenvironmental particles and exhaled nitric oxide before and after a group bus trip. Environ Health Perspect 115: 507–512.

[836] HEI Panel on the Health Effects of Long-Term Exposure to Traffic-Related Air Pollution (2022) Systematic review and meta-analysis of selected health effects of long-term exposure to traffic-related air pollution. Health Effects Institute Special Report 23. [Online at *https://www.healtheffects.org/publication/systematic-review-and-meta-analysis-selected-health-effects-long-term-exposure-traffic*] This more recent review focused on health outcomes related to birth effects, respiratory effects, cardiometabolic effects, and mortality.

[837] Boogaard, H.; Patton. A.P.; Atkinson, R.W.; Brook, J.R.; Chang, H.H.; Crouse, D.L.; Fussell, J.C.; Hoek, G.; Hoffman, B.; Kappeler, R.; Kutlar Joss, M.; Ondras, M.; Sagiv, S.K.; Somoli, E.; Shaikh, R.; Szpiro, A.A.; Van Vliet E.D.S.; Vinneau, D.; Weuve, J.; Lurmann, F.W.; Forastiere, F. (2022) Long-term exposure to traffic-related air pollution and selected health outcomes: a systematic review and meta-analysis. Environ Intl 164: 107262. [Online at *https://doi.org/10.1016/j.envint.2022.107262*].

[838] Boothe, V.L.; Shendell, D.G. (2008). Potential health effects associated with residential proximity to freeways and primary roads: review of scientific literature, 1999–2006. J Environ Health 70: 33–41.

[839] Salam, M.T.; Islam, T.; Gilliland, F.D. (2008). Recent evidence for adverse effects of residential proximity to traffic sources on asthma. Curr Opin Pulm Med 14: 3–8.

Continued

2014, researchers from the U.S. Centers for Disease Control and Prevention (CDC) published a systematic review and meta-analysis of studies evaluating the risk of childhood leukemia associated with traffic exposure and reported positive associations between ''postnatal'' proximity to traffic and leukemia risks, but no such association for ''prenatal'' exposures.[842] The U.S. Department of Health and Human Services' National Toxicology Program published a monograph including a systematic review of traffic-related air pollution and its impacts on hypertensive disorders of pregnancy. The National Toxicology Program concluded that exposure to traffic-related air pollution is ''presumed to be a hazard to pregnant women'' for developing hypertensive disorders of pregnancy.[843]

Health outcomes with few publications suggest the possibility of other effects still lacking sufficient evidence to draw definitive conclusions. Among these outcomes with a small number of positive studies are neurological impacts (*e.g.,* autism and reduced cognitive function) and reproductive outcomes (*e.g.,* preterm birth, low birth weight).[844 845 846 847 848]

In addition to health outcomes, particularly cardiopulmonary effects, conclusions of numerous studies suggest mechanisms by which traffic-related air pollution affects health. For example, numerous studies indicate that near-roadway exposures may increase systemic inflammation, affecting organ systems, including blood vessels and lungs.[849 850 851 852] Additionally, long-term exposures in near-road environments have been associated with inflammation-associated conditions, such as atherosclerosis and asthma.[853 854 855]

Several studies suggest that some factors may increase susceptibility to the effects of traffic-associated air pollution. Several studies have found stronger respiratory associations in children experiencing chronic social stress, such as in violent neighborhoods or in homes with high family stress.[856 857 858]

The risks associated with residence, workplace, or schools near major roads are of potentially high public health significance due to the large population in such locations. Every two years from 1997 to 2009 and in 2011, the U.S. Census Bureau's American Housing Survey (AHS) conducted a survey that includes whether housing units are within 300 feet of an ''airport, railroad, or highway with four or more lanes.''[859] The 2013 AHS was the last AHS that included that question. The 2013 survey reports that 17.3 million housing units, or 13 percent of all housing units in the United States, were in such areas. Assuming that populations and housing units are in the same locations, this corresponds to a population of more than 41 million U.S. residents in close proximity to high-traffic roadways or other transportation sources. According to the Central Intelligence Agency's World Factbook, based on data collected between 2012–2014, the United States had 6,586,610 km of roadways, 293,564 km of railways, and 13,513 airports. As such, highways represent the overwhelming majority of transportation facilities described by this factor in the AHS.

EPA also conducted a study to estimate the number of people living near truck freight routes in the United States.[860] Based on a population analysis using the U.S. Department of Transportation's (USDOT) Freight Analysis Framework 4 (FAF4) and population data from the 2010 decennial census, an estimated 72 million people live within 200 meters (about 650 feet) of these freight routes.[861 862] In addition, as described in Section VI.D.2, relative to the rest of the population, people of color and those with lower incomes are more likely to live near FAF4 truck routes. They are also more likely to live in metropolitan areas. The EPA's Exposure Factor Handbook also indicates that, on average, Americans spend more than an hour traveling each day, bringing nearly all residents into a high-exposure microenvironment for part of the day.

[840] Sun, X.; Zhang, S.; Ma, X. (2014) No association between traffic density and risk of childhood leukemia: a meta-analysis. Asia Pac J Cancer Prev 15: 5229–5232.

[841] Raaschou-Nielsen, O.; Reynolds, P. (2006). Air pollution and childhood cancer: a review of the epidemiological literature. Int J Cancer 118: 2920–9.

[842] Boothe, VL.; Boehmer, T.K.; Wendel, A.M.; Yip, F.Y. (2014) Residential traffic exposure and childhood leukemia: a systematic review and meta-analysis. Am J Prev Med 46: 413–422.

[843] National Toxicology Program (2019) NTP Monograph on the Systematic Review of Traffic-related Air Pollution and Hypertensive Disorders of Pregnancy. NTP Monograph 7. *https://ntp.niehs.nih.gov/ntp/ohat/trap/mgraph/trap_final_508.pdf.*

[844] Volk, H.E.; Hertz-Picciotto, I.; Delwiche, L.; et al. (2011). Residential proximity to freeways and autism in the CHARGE study. Environ Health Perspect 119: 873–877.

[845] Franco-Suglia, S.; Gryparis, A.; Wright, R.O.; et al. (2007). Association of black carbon with cognition among children in a prospective birth cohort study. Am J Epidemiol. *https://doi.org/10.1093/aje/kwm308.*

[846] Power, M.C.; Weisskopf, M.G.; Alexeef, SE; et al. (2011). Traffic-related air pollution and cognitive function in a cohort of older men. Environ Health Perspect 2011: 682–687.

[847] Wu, J.; Wilhelm, M.; Chung, J.; et al. (2011). Comparing exposure assessment methods for traffic-related air pollution in and adverse pregnancy outcome study. Environ Res 111: 685–6692.

[848] Stenson, C.; Wheeler, A.J.; Carver, A.; et al. (2021) The impact of traffic-related air pollution on child and adolescent academic performance: a systematic review. Environ Intl 155: 106696 [Online at *https://doi.org/10.1016/j.envint.2021.106696*].

[849] Riediker, M. (2007). Cardiovascular effects of fine particulate matter components in highway patrol officers. Inhal Toxicol 19: 99–105. doi: 10.1080/08958370701495238.

[850] Alexeef, SE; Coull, B.A.; Gryparis, A.; et al. (2011). Medium-term exposure to traffic-related air pollution and markers of inflammation and endothelial function. Environ Health Perspect 119: 481–486. doi:10.1289/ehp.1002560.

[851] Eckel. S.P.; Berhane, K.; Salam, M.T.; et al. (2011). Residential Traffic-related pollution exposure and exhaled nitric oxide in the Children's Health Study. Environ Health Perspect. doi:10.1289/ehp.1103516.

[852] Zhang, J.; McCreanor, J.E.; Cullinan, P.; et al. (2009). Health effects of real-world exposure diesel exhaust in persons with asthma. Res Rep Health Effects Inst 138. [Online at *http://www.healtheffects.org*].

[853] Adar, S.D.; Klein, R.; Klein, E.K.; et al. (2010). Air pollution and the microvasculature: a cross-sectional assessment of in vivo retinal images in the population-based Multi-Ethnic Study of Atherosclerosis. PLoS Med 7(11): E1000372. *https://doi.org/10.1371/journal.pmed.1000372.*

[854] Kan, H.; Heiss, G.; Rose, K.M.; et al. (2008). Prospective analysis of traffic exposure as a risk factor for incident coronary heart disease: The Atherosclerosis Risk in Communities (ARIC) study. Environ Health Perspect 116: 1463–1468. *https://doi.org/10.1289/ehp.11290.*

[855] McConnell, R.; Islam, T.; Shankardass, K.; et al. (2010). Childhood incident asthma and traffic-related air pollution at home and school. Environ Health Perspect 1021–1026.

[856] Islam, T.; Urban, R.; Gauderman, W.J.; et al. (2011). Parental stress increases the detrimental effect of traffic exposure on children's lung function. Am J Respir Crit Care Med.

[857] Clougherty, J.E.; Levy, J.I.; Kubzansky, L.D.; et al. (2007). Synergistic effects of traffic-related air pollution and exposure to violence on urban asthma etiology. Environ Health Perspect 115: 1140–1146.

[858] Chen, E.; Schrier, H.M.; Strunk, R.C.; et al. (2008). Chronic traffic-related air pollution and stress interact to predict biologic and clinical outcomes in asthma. Environ Health Perspect 116: 970–5.

[859] The variable was known as ''ETRANS'' in the questions about the neighborhood.

[860] U.S. EPA (2021). Estimation of Population Size and Demographic Characteristics among People Living Near Truck Routes in the Conterminous United States. Memorandum to the Docket.

[861] FAF4 is a model from the USDOT's Bureau of Transportation Statistics (BTS) and Federal Highway Administration (FHWA), which provides data associated with freight movement in the U.S. It includes data from the 2012 Commodity Flow Survey (CFS), the Census Bureau on international trade, as well as data associated with construction, agriculture, utilities, warehouses, and other industries. FAF4 estimates the modal choices for moving goods by trucks, trains, boats, and other types of freight modes. It includes traffic assignments, including truck flows on a network of truck routes. *https://ops.fhwa.dot.gov/freight/freight_analysis/faf/.*

[862] The same analysis estimated the population living within 100 meters of a FAF4 truck route is 41 million.

[863] [864] While near-roadway studies focus on residents near roads or others spending considerable time near major roads, the duration of commuting results in another important contributor to overall exposure to traffic-related air pollution. Studies of health that address time spent in transit have found evidence of elevated risk of cardiac impacts. [865] [866] [867] Studies have also found that school bus emissions can increase student exposures to diesel-related air pollutants, and that programs that reduce school bus emissions may improve health and reduce school absenteeism. [868] [869] [870] [871]

As described in Section VI.D.2, we estimate that about 10 million students attend schools within 200 meters of major roads. Research into the impact of traffic-related air pollution on school performance is tentative. A review of this literature found some evidence that children exposed to higher levels of traffic-related air pollution show poorer academic performance than those exposed to lower levels of traffic-related air pollution.[872] [873] However, this evidence was judged to be weak due to limitations in the assessment methods.

3. Welfare Effects Associated With Exposure to Non-GHG Pollutants

This section discusses the environmental effects associated with non-GHG pollutants affected by this rule, specifically particulate matter, ozone, NO_X, SO_X, and air toxics.

i. Visibility

Visibility can be defined as the degree to which the atmosphere is transparent to visible light.[874] Visibility impairment is caused by light scattering and absorption by suspended particles and gases. It is dominated by contributions from suspended particles except under pristine conditions. Visibility is important because it has direct significance to people's enjoyment of daily activities in all parts of the country. Individuals value good visibility for the well-being it provides them directly, where they live and work, and in places where they enjoy recreational opportunities. Visibility is also highly valued in significant natural areas, such as national parks and wilderness areas, and special emphasis is given to protecting visibility in these areas. For more information on visibility see the final 2019 p.m. ISA.[875]

EPA is working to address visibility impairment. Reductions in air pollution from implementation of various programs associated with the Clean Air Act Amendments of 1990 provisions have resulted in substantial improvements in visibility and will continue to do so in the future. Nationally, because trends in haze are closely associated with trends in particulate sulfate and nitrate due to the relationship between their concentration and light extinction, visibility trends have improved as emissions of SO_2 and NO_X have decreased over time due to air pollution regulations such as the Acid Rain Program.[876] However, in the western part of the country, changes in total light extinction were smaller, and the contribution of particulate organic matter to atmospheric light extinction was increasing due to increasing wildfire emissions.[877]

In the Clean Air Act Amendments of 1977, Congress recognized visibility's value to society by establishing a national goal to protect national parks and wilderness areas from visibility impairment caused by manmade pollution.[878] In 1999, EPA finalized the regional haze program to protect the visibility in Mandatory Class I Federal areas.[879] There are 156 national parks, forests and wilderness areas categorized as Mandatory Class I Federal areas.[880] These areas are defined in CAA section 162 as those national parks exceeding 6,000 acres, wilderness areas and memorial parks exceeding 5,000 acres, and all international parks which were in existence on August 7, 1977.

EPA has also concluded that $PM_{2.5}$ causes adverse effects on visibility in other areas that are not targeted by the Regional Haze Rule, such as urban areas, depending on $PM_{2.5}$ concentrations and other factors such as dry chemical composition and relative humidity (*i.e.,* an indicator of the water composition of the particles). The secondary (welfare-based) PM NAAQS provide protection against visibility effects. In recent PM NAAQS reviews, EPA evaluated a target level of protection for visibility impairment that is expected to be met through attainment of the existing secondary PM standards.[881]

ii. Ozone Effects on Ecosystems

The welfare effects of ozone include effects on ecosystems, which can be observed across a variety of scales, *i.e.,* subcellular, cellular, leaf, whole plant, population and ecosystem. Ozone effects that begin at small spatial scales, such as the leaf of an individual plant, when they occur at sufficient magnitudes (or to a sufficient degree) can result in effects being propagated

[863] EPA. (2011) Exposure Factors Handbook: 2011 Edition. Chapter 16. Online at *https://www.epa.gov/expobox/about-exposure-factors-handbook.*

[864] It is not yet possible to estimate the long-term impact of growth in telework associated with the COVID–19 pandemic on travel behavior. There were notable changes during the pandemic. For example, according to the 2021 American Time Use Survey, a greater fraction of workers did at least part of their work at home (38%) as compared with the 2019 survey (24%). [Online at *https://www.bls.gov/news.release/atus.nr0.htm.*]

[865] Riediker, M.; Cascio, W.E.; Griggs, T.R.; et al. (2004) Particulate matter exposure in cars is associated with cardiovascular effects in healthy young men. Am J Respir Crit Care Med 169. [Online at *https://doi.org/10.1164/rccm.200310-1463OC.*]

[866] Peters, A.; von Klot, S.; Heier, M.; et al. (2004) Exposure to traffic and the onset of myocardial infarction. New Engl J Med 1721–1730. [Online at *https://doi.org/10.1056/NEJMoa040203.*]

[867] Adar, S.D.; Gold, D.R.; Coull, B.A.; (2007) Focused exposure to airborne traffic particles and heart rate variability in the elderly. Epidemiology 18: 95–103 [Online at 351: *https://doi.org/10.1097/01.ede.0000249409.81050.46.*]

[868] Sabin, L.; Behrentz, E.; Winer, A.M.; et al. Characterizing the range of children's air pollutant exposure during school bus commutes. J Expo Anal Environ Epidemiol 15: 377–387. [Online at *https://doi.org/10.1038/sj.jea.7500414.*]

[869] Li, C.; N, Q.; Ryan, P.H.; School bus pollution and changes in the air quality at schools: a case study. J Environ Monit 11: 1037–1042. [*https://doi.org/10.1039/b819458k.*]

[870] Austin, W.; Heutel, G.; Kreisman, D. (2019) School bus emissions, student health and academic performance. Econ Edu Rev 70: 108–12.

[871] Adar, S.D.; D.Souza, J.; Sheppard, L.; et al. (2015) Adopting clean fuels and technologies on school buses. Pollution and health impacts in children. Am J Respir Crit Care Med 191. [Online at *http://doi.org/10.1164/rccm.201410-1924OC.*]

[872] Stenson, C.; Wheeler, A.J.; Carver, A.; et al. (2021) The impact of traffic-related air pollution on child and adolescent academic performance: a systematic review. Environ Intl 155: 106696. [Online at *https://doi.org/10.1016/j.envint.2021.106696.*]

[873] Gartland, N; Aljofi, H.E.; Dienes, K.; Munford, L.A.; Theakston, A.L.; van Tongeren, M. (2022) The effects of traffic air pollution in and around schools on executive function and academic performance in children: a rapid review. Int J Environ Res Public Health 10: 749. [Online at *https://www.ncbi.nlm.nih.gov/pmc/articles/PMC8776123.*]

[874] National Research Council, (1993). Protecting Visibility in National Parks and Wilderness Areas. National Academy of Sciences Committee on Haze in National Parks and Wilderness Areas. National Academy Press, Washington, DC. This book can be viewed on the National Academy Press website at *https://www.nap.edu/catalog/2097/protecting-visibility-in-national-parks-and-wilderness-areas.*

[875] U.S. EPA. Integrated Science Assessment (ISA) for Particulate Matter (Final Report, 2019). U.S. Environmental Protection Agency, Washington, DC, EPA/600/R–19/188, 2019.

[876] U.S. EPA. Integrated Science Assessment (ISA) for Particulate Matter (Final Report, 2019). U.S. Environmental Protection Agency, Washington, DC, EPA/600/R–19/188, 2019.

[877] Hand, JL; Prenni, AJ; Copeland, S; Schichtel, BA; Malm, WC. (2020). Thirty years of the Clean Air Act Amendments: Impacts on haze in remote regions of the United States (1990–2018). Atmos Environ 243: 117865.

[878] See CAA Section 169(a).

[879] 64 FR 35714, July 1, 1999.

[880] 62 FR 38680–38681, July 18, 1997.

[881] On June 10, 2021, EPA announced that it will reconsider the decision to retain the PM NAAQS. *https://www.epa.gov/pm-pollution/national-ambient-air-quality-standards-naaqs-pm.*

along a continuum to higher and higher levels of biological organization. For example, effects at the individual plant level, such as altered rates of leaf gas exchange, growth and reproduction, can, when widespread, result in broad changes in ecosystems, such as productivity, carbon storage, water cycling, nutrient cycling, and community composition.

Ozone can produce both acute and chronic injury in sensitive plant species depending on the concentration level and the duration of the exposure.[882] In those sensitive species,[883] effects from repeated exposure to ozone throughout the growing season of the plant can tend to accumulate, so even relatively low concentrations experienced for a longer duration have the potential to create chronic stress on vegetation.[884] [885] Ozone damage to sensitive plant species includes impaired photosynthesis and visible injury to leaves. The impairment of photosynthesis, the process by which the plant makes carbohydrates (its source of energy and food), can lead to reduced crop yields, timber production, and plant productivity and growth. Impaired photosynthesis can also lead to a reduction in root growth and carbohydrate storage below ground, resulting in other, more subtle plant and ecosystems impacts.[886] These latter impacts include increased susceptibility of plants to insect attack, disease, harsh weather, interspecies competition and overall decreased plant vigor. The adverse effects of ozone on areas with sensitive species could potentially lead to species shifts and loss from the affected ecosystems,[887] resulting in a loss or reduction in associated ecosystem goods and services. Additionally, visible ozone injury to leaves can result in a loss of aesthetic value in areas of special scenic significance like national parks and wilderness areas and reduced use of sensitive ornamentals in landscaping.[888] In addition to ozone effects on vegetation, newer evidence suggests that ozone affects interactions between plants and insects by altering chemical signals (*e.g.,* floral scents) that plants use to communicate to other community members, such as attraction of pollinators.

The Ozone ISA presents more detailed information on how ozone affects vegetation and ecosystems.[889] The Ozone ISA reports causal and likely causal relationships between ozone exposure and a number of welfare effects and characterizes the weight of evidence for different effects associated with ozone.[890] The ISA concludes that visible foliar injury effects on vegetation, reduced vegetation growth, reduced plant reproduction, reduced productivity in terrestrial ecosystems, reduced yield and quality of agricultural crops, alteration of below-ground biogeochemical cycles, and altered terrestrial community composition are causally associated with exposure to ozone. It also concludes that increased tree mortality, altered herbivore growth and reproduction, altered plant-insect signaling, reduced carbon sequestration in terrestrial ecosystems, and alteration of terrestrial ecosystem water cycling are likely to be causally associated with exposure to ozone.

iii. Deposition

The Integrated Science Assessment for Oxides of Nitrogen, Oxides of Sulfur, and Particulate Matter—Ecological Criteria documents the ecological effects of the deposition of these criteria air pollutants.[891] It is clear from the body of evidence that oxides of nitrogen, oxides of sulfur, and particulate matter contribute to total nitrogen (N) and sulfur (S) deposition. In turn, N and S deposition cause either nutrient enrichment or acidification depending on the sensitivity of the landscape or the species in question. Both enrichment and acidification are characterized by an alteration of the biogeochemistry and the physiology of organisms, resulting in harmful declines in biodiversity in terrestrial, freshwater, wetland, and estuarine ecosystems in the U.S. Decreases in biodiversity mean that some species become relatively less abundant and may be locally extirpated. In addition to the loss of unique living species, the decline in total biodiversity can be harmful because biodiversity is an important determinant of the stability of ecosystems and their ability to provide socially valuable ecosystem services.

Terrestrial, wetland, freshwater, and estuarine ecosystems in the United States are affected by N enrichment/eutrophication caused by N deposition. These effects have been consistently documented across the United States for hundreds of species. In aquatic systems increased nitrogen can alter species assemblages and cause eutrophication. In terrestrial systems nitrogen loading can lead to loss of nitrogen-sensitive lichen species, decreased biodiversity of grasslands, meadows and other sensitive habitats, and increased potential for invasive species.

The sensitivity of terrestrial and aquatic ecosystems to acidification from nitrogen and sulfur deposition is predominantly governed by geology. Prolonged exposure to excess nitrogen and sulfur deposition in sensitive areas acidifies lakes, rivers, and soils. Increased acidity in surface waters creates inhospitable conditions for biota and affects the abundance and biodiversity of fishes, zooplankton and macroinvertebrates and ecosystem function. Over time, acidifying deposition also removes essential nutrients from forest soils, depleting the capacity of soils to neutralize future acid loadings and negatively affecting forest sustainability. Major effects in forests include a decline in sensitive tree species, such as red spruce (Picea rubens) and sugar maple (Acer saccharum).

Building materials including metals, stones, cements, and paints undergo natural weathering processes from exposure to environmental elements (*e.g.,* wind, moisture, temperature fluctuations, sunlight, etc.). Pollution can worsen and accelerate these effects. Deposition of PM is associated with both physical damage (materials damage effects) and impaired aesthetic qualities (soiling effects). Wet and dry deposition of PM can physically affect materials, adding to the effects of natural weathering processes, by potentially promoting or accelerating the corrosion of metals, by degrading paints and by deteriorating building materials such as

[882] 73 FR 16486, March 27, 2008.

[883] 73 FR 16491, March 27, 2008. Only a small percentage of all the plant species growing within the U.S. (over 43,000 species have been catalogued in the USDA PLANTS database) have been studied with respect to ozone sensitivity.

[884] U.S. EPA. Integrated Science Assessment (ISA) for Ozone and Related Photochemical Oxidants (Final Report). U.S. Environmental Protection Agency, Washington, DC, EPA/600/R–20/012, 2020.

[885] The concentration at which ozone levels overwhelm a plant's ability to detoxify or compensate for oxidant exposure varies. Thus, whether a plant is classified as sensitive or tolerant depends in part on the exposure levels being considered.

[886] 73 FR 16492, March 27, 2008.

[887] 73 FR 16493–16494, March 27, 2008. Ozone impacts could be occurring in areas where plant species sensitive to ozone have not yet been studied or identified.

[888] 73 FR 16490–16497, March 27, 2008.

[889] U.S. EPA. Integrated Science Assessment (ISA) for Ozone and Related Photochemical Oxidants (Final Report). U.S. Environmental Protection Agency, Washington, DC, EPA/600/R–20/012, 2020.

[890] The Ozone ISA evaluates the evidence associated with different ozone related health and welfare effects, assigning one of five ''weight of evidence'' determinations: causal relationship, likely to be a causal relationship, suggestive of a causal relationship, inadequate to infer a causal relationship, and not likely to be a causal relationship. For more information on these levels of evidence, please refer to Table II of the ISA.

[891] U.S. EPA. Integrated Science Assessment (ISA) for Oxides of Nitrogen, Oxides of Sulfur and Particulate Matter Ecological Criteria (Final Report). U.S. Environmental Protection Agency, Washington, DC, EPA/600/R–20/278, 2020.

stone, concrete and marble.[892] The effects of PM are exacerbated by the presence of acidic gases and can be additive or synergistic due to the complex mixture of pollutants in the air and surface characteristics of the material. Acidic deposition has been shown to have an effect on materials including zinc/galvanized steel and other metal, carbonate stone (as monuments and building facings), and surface coatings (paints).[893] The effects on historic buildings and outdoor works of art are of particular concern because of the uniqueness and irreplaceability of many of these objects. In addition to aesthetic and functional effects on metals, stone and glass, altered energy efficiency of photovoltaic panels by PM deposition is also becoming an important consideration for impacts of air pollutants on materials.

iv. Welfare Effects Associated With Air Toxics

Emissions from producing, transporting, and combusting fuel contribute to ambient levels of pollutants that contribute to adverse effects on vegetation. VOCs, some of which are considered air toxics, have long been suspected to play a role in vegetation damage.[894] In laboratory experiments, a wide range of tolerance to VOCs has been observed.[895] Decreases in harvested seed pod weight have been reported for the more sensitive plants, and some studies have reported effects on seed germination, flowering, and fruit ripening. Effects of individual VOCs or their role in conjunction with other stressors (*e.g.,* acidification, drought, temperature extremes) have not been well studied. In a recent study of a mixture of VOCs including ethanol and toluene on herbaceous plants, significant effects on seed production, leaf water content, and photosynthetic efficiency were reported for some plant species.[896]

Research suggests an adverse impact of vehicle exhaust on plants, which has in some cases been attributed to aromatic compounds and in other cases to NO_X.[897] [898] [899] The impacts of VOCs on plant reproduction may have long-term implications for biodiversity and survival of native species near major roadways. Most of the studies of the impacts of VOCs on vegetation have focused on short-term exposure, and few studies have focused on long-term effects of VOCs on vegetation and the potential for metabolites of these compounds to affect herbivores or insects.

C. Air Quality Impacts of Non-GHG Pollutants

Section V of the preamble presents projections of the changes in criteria pollutant and air toxics emissions due to the proposed standards. However, the atmospheric chemistry related to ambient concentrations of $PM_{2.5}$, ozone and air toxics is very complex, and evaluating air quality impacts of this proposed rule based solely on emissions changes is difficult. Photochemical air quality modeling is necessary to accurately project levels of most criteria and air toxic pollutants, including ozone and PM. Air quality models use mathematical and numerical techniques to simulate the physical and chemical processes that affect air pollutants as they disperse and react in the atmosphere. Based on inputs of meteorological data and source information, these models are designed to characterize primary pollutants that are emitted directly into the atmosphere and secondary pollutants that are formed through complex chemical reactions within the atmosphere. Photochemical air quality models have become widely recognized and routinely utilized tools in regulatory analysis for assessing the impacts of control strategies. Because of the length of time needed to prepare the necessary emissions inventories, in addition to the processing time associated with the modeling itself, we do not have air quality modeling results available for this proposed rule.

D. Environmental Justice

EPA's 2016 ''Technical Guidance for Assessing Environmental Justice in Regulatory Analysis'' provides recommendations on conducting the highest quality analysis feasible, recognizing that data limitations, time and resource constraints, and analytic challenges will vary by media and regulatory context.[900] When assessing the potential for disproportionately high and adverse health or environmental impacts of regulatory actions on populations with potential EJ concerns, the EPA strives to answer three broad questions: (1) Is there evidence of potential environmental justice (EJ) concerns in the baseline (the state of the world absent the regulatory action)? Assessing the baseline will allow the EPA to determine whether pre-existing disparities are associated with the pollutant(s) under consideration (*e.g.,* if the effects of the pollutant(s) are more concentrated in some population groups); (2) Is there evidence of potential EJ concerns for the regulatory option(s) under consideration? Specifically, how are the pollutant(s) and its effects distributed for the regulatory options under consideration?; and (3) Do the regulatory option(s) under consideration exacerbate or mitigate EJ concerns relative to the baseline? It is not always possible to quantitatively assess these questions.

In this section, we discuss the EJ impacts of the proposed CO_2 emission standards from the anticipated reduction of GHGs (Section VI.D.1). EPA did not consider any potential disproportionate impacts of vehicle emissions in selecting the proposed CO_2 emission standards, but we view mitigation of disproportionate impacts of vehicle GHG emissions as one element of protecting public health consistent with CAA section 202. We also discuss potential additional EJ impacts from the non-GHG (criteria pollutants and air toxics) emissions changes we estimate would result from compliance with the proposed CO_2 emission standards (Section VI.D.2). EPA requests comment on the EJ impact analysis presented in this proposal.

1. GHG Impacts

In 2009, under the *Endangerment and Cause or Contribute Findings for Greenhouse Gases Under Section 202(a) of the Clean Air Act* (''Endangerment Finding''), the Administrator considered

[892] U.S. EPA. Integrated Science Assessment (ISA) for Particulate Matter (Final Report, 2019). U.S. Environmental Protection Agency, Washington, DC, EPA/600/R–19/188, 2019.

[893] Irving, P.M., e.d. 1991. Acid Deposition: State of Science and Technology, Volume III, Terrestrial, Materials, Health, and Visibility Effects, The U.S. National Acid Precipitation Assessment Program, Chapter 24, page 24–76.

[894] U.S. EPA. (1991). Effects of organic chemicals in the atmosphere on terrestrial plants. EPA/600/3–91/001.

[895] Cape JN, ID Leith, J Binnie, J Content, M Donkin, M Skewes, DN Price AR Brown, AD Sharpe. (2003). Effects of VOCs on herbaceous plants in an open-top chamber experiment. Environ. Pollut. 124:341–343.

[896] Cape JN, ID Leith, J Binnie, J Content, M Donkin, M Skewes, DN Price AR Brown, AD Sharpe. (2003). Effects of VOCs on herbaceous plants in an open-top chamber experiment. Environ. Pollut. 124:341–343.

[897] Viskari E–L. (2000). Epicuticular wax of Norway spruce needles as indicator of traffic pollutant deposition. Water, Air, and Soil Pollut. 121:327–337.

[898] Ugrekhelidze D, F Korte, G Kvesitadze. (1997). Uptake and transformation of benzene and toluene by plant leaves. Ecotox. Environ. Safety 37:24–29.

[899] Kammerbauer H, H Selinger, R Rommelt, A Ziegler-Jons, D Knoppik, B Hock. (1987). Toxic components of motor vehicle emissions for the spruce Picea abies. Environ. Pollut. 48:235–243.

[900] ''Technical Guidance for Assessing Environmental Justice in Regulatory Analysis.'' Epa.gov, Environmental Protection Agency, *https://www.epa.gov/sites/production/files/2016-06/documents/ejtg_5_6_16_v5.1.pdf.* (June 2016).

how climate change threatens the health and welfare of the U.S. population. As part of that consideration, she also considered risks to people of color and low-income individuals and communities, finding that certain parts of the U.S. population may be especially vulnerable based on their characteristics or circumstances. These groups include economically and socially disadvantaged communities; individuals at vulnerable life stages, such as the elderly, the very young, and pregnant or nursing women; those already in poor health or with comorbidities; the disabled; those experiencing homelessness, mental illness, or substance abuse; and Indigenous or other populations dependent on one or limited resources for subsistence due to factors including but not limited to geography, access, and mobility.

Scientific assessment reports produced over the past decade by the U.S. Global Change Research Program (USGCRP), [901] [902] the Intergovernmental Panel on Climate Change IPCC), [903] [904] [905] [906] and the National Academies of Science, Engineering, and Medicine [907] [908] add more evidence that the impacts of climate change raise potential environmental justice concerns. These reports conclude that poorer or predominantly non-White communities can be especially vulnerable to climate change impacts because they tend to have limited adaptive capacities, are more dependent on climate-sensitive resources such as local water and food supplies, or have less access to social and information resources. Some communities of color, specifically populations defined jointly by ethnic/racial characteristics and geographic location, may be uniquely vulnerable to climate change health impacts in the United States. In particular, the 2016 scientific assessment on the *Impacts of Climate Change on Human Health*[909] found with high confidence that vulnerabilities are place- and time-specific, life stages and ages are linked to immediate and future health impacts, and social determinants of health are linked to greater extent and severity of climate change-related health impacts. The GHG emission reductions from this proposal would contribute to efforts to reduce the probability of severe impacts related to climate change.

i. Effects on Specific Populations of Concern

Individuals living in socially and economically vulnerable communities, such as those living at or below the poverty line or who are experiencing homelessness or social isolation, are at greater risk of health effects from climate change. This is also true with respect to people at vulnerable life stages, specifically women who are pre- and perinatal or are nursing; *in utero* fetuses; children at all stages of development; and the elderly. Per the Fourth National Climate Assessment (NCA4), ''Climate change affects human health by altering exposures to heat waves, floods, droughts, and other extreme events; vector-, food- and waterborne infectious diseases; changes in the quality and safety of air, food, and water; and stresses to mental health and well-being.'' [910] Many health conditions such as cardiopulmonary or respiratory illness and other health impacts are associated with and exacerbated by an increase in GHGs and climate change outcomes, which is problematic as these diseases occur at higher rates within vulnerable communities. Importantly, negative public health outcomes include those that are physical in nature, as well as mental, emotional, social, and economic.

To this end, the scientific assessment literature, including the aforementioned reports, demonstrates that there are myriad ways in which these populations may be affected at the individual and community levels. Individuals face differential exposure to criteria pollutants, in part due to the proximities of highways, trains, factories, and other major sources of pollutant-emitting sources to less-affluent residential areas. Outdoor workers, such as construction or utility crews and agricultural laborers, who frequently are comprised of already at-risk groups, are exposed to poor air quality and extreme temperatures without relief. Furthermore, people in communities with EJ concerns face greater housing, clean water, and food insecurity and bear disproportionate economic impacts and health burdens associated with climate change effects. They have less or limited access to healthcare and affordable, adequate

[901] USGCRP, 2018: *Impacts, Risks, and Adaptation in the United States: Fourth National Climate Assessment, Volume II* [Reidmiller, D.R., C.W. Avery, D.R. Easterling, K.E. Kunkel, K.L.M. Lewis, T.K. Maycock, and B.C. Stewart (eds.)]. U.S. Global Change Research Program, Washington, DC, USA, 1515 pp. doi: 10.7930/NCA4.2018.

[902] USGCRP, 2016: The Impacts of Climate Change on Human Health in the United States: A Scientific Assessment. Crimmins, A., J. Balbus, J.L. Gamble, C.B. Beard, J.E. Bell, D. Dodgen, R.J. Eisen, N. Fann, M.D. Hawkins, S.C. Herring, L. Jantarasami, D.M. Mills, S. Saha, M.C. Sarofim, J. Trtanj, and L. Ziska, Eds. U.S. Global Change Research Program, Washington, DC, 312 pp. *http://dx.doi.org/10.7930/J0R49NQX.*

[903] Oppenheimer, M., M. Campos, R.Warren, J. Birkmann, G. Luber, B. O'Neill, and K. Takahashi, 2014: Emergent risks and key vulnerabilities. In: Climate Change 2014: Impacts, Adaptation, and Vulnerability. Part A: Global and Sectoral Aspects. Contribution of Working Group II to the Fifth Assessment Report of the Intergovernmental Panel on Climate Change [Field, C.B., V.R. Barros, D.J. Dokken, K.J. Mach, M.D. Mastrandrea, T.E. Bilir, M. Chatterjee, K.L. Ebi, Y.O. Estrada, R.C. Genova, B. Girma, E.S. Kissel, A.N. Levy, S. MacCracken, P.R. Mastrandrea, and L.L.White (eds.)]. Cambridge University Press, Cambridge, United Kingdom and New York, NY, USA, pp. 1039–1099.

[904] Porter, J.R., L. Xie, A.J. Challinor, K. Cochrane, S.M. Howden, M.M. Iqbal, D.B. Lobell, and M.I. Travasso, 2014: Food security and food production systems. In: Climate Change 2014: Impacts, Adaptation, and Vulnerability. Part A: Global and Sectoral Aspects. Contribution of Working Group II to the Fifth Assessment Report of the Intergovernmental Panel on Climate Change [Field, C.B., V.R. Barros, D.J. Dokken, K.J. Mach, M.D. Mastrandrea, T.E. Bilir, M. Chatterjee, K.L. Ebi, Y.O. Estrada, R.C. Genova, B. Girma, E.S. Kissel, A.N. Levy, S. MacCracken, P.R. Mastrandrea, and L.L.White (eds.)]. Cambridge University Press, Cambridge, United Kingdom and New York, NY, USA, pp. 485–533.

[905] Smith, K.R., A.Woodward, D. Campbell-Lendrum, D.D. Chadee, Y. Honda, Q. Liu, J.M. Olwoch, B. Revich, and R. Sauerborn, 2014: Human health: impacts, adaptation, and co-benefits. In: Climate Change 2014: Impacts, Adaptation, and Vulnerability. Part A: Global and Sectoral Aspects. Contribution of Working Group II to the Fifth Assessment Report of the Intergovernmental Panel on Climate Change [Field, C.B., V.R. Barros, D.J. Dokken, K.J. Mach, M.D. Mastrandrea, T.E. Bilir, M. Chatterjee, K.L. Ebi, Y.O. Estrada, R.C. Genova, B. Girma, E.S. Kissel,A.N. Levy, S. MacCracken, P.R. Mastrandrea, and L.L.White (eds.)]. Cambridge University Press, Cambridge, United Kingdom and New York, NY, USA, pp. 709–754.

[906] IPCC, 2018: Global Warming of 1.5°C.An IPCC Special Report on the impacts of global warming of 1.5°C above pre-industrial levels and related global greenhouse gas emission pathways, in the context of strengthening the global response to the threat of climate change, sustainable development, and efforts to eradicate poverty [Masson-Delmotte, V., P. Zhai, H.-O. Pörtner, D. Roberts, J. Skea, P.R. Shukla, A. Pirani, W. Moufouma-Okia, C. Péan, R. Pidcock, S. Connors, J.B.R. Matthews, Y. Chen, X. Zhou, M.I. Gomis, E. Lonnoy, T. Maycock, M. Tignor, and T. Waterfield (eds.)]. In Press.

[907] National Research Council. 2011. America's Climate Choices. Washington, DC: The National Academies Press. *https://doi.org/10.17226/12781.*

[908] National Academies of Sciences, Engineering, and Medicine. 2017. Communities in Action: Pathways to Health Equity. Washington, DC: The National Academies Press. *https://doi.org/10.17226/24624.*

[909] USGCRP, 2016: The Impacts of Climate Change on Human Health in the United States: A Scientific Assessment. Crimmins, A., J. Balbus, J.L. Gamble, C.B. Beard, J.E. Bell, D. Dodgen, R.J. Eisen, N. Fann, M.D. Hawkins, S.C. Herring, L. Jantarasami, D.M. Mills, S. Saha, M.C. Sarofim, J. Trtanj, and L. Ziska, Eds. U.S. Global Change Research Program, Washington, DC, 312 pp. *http://dx.doi.org/10.7930/J0R49NQX.*

[910] Ebi, K.L., J.M. Balbus, G. Luber, A. Bole, A. Crimmins, G. Glass, S. Saha, M.M. Shimamoto, J. Trtanj, and J.L. White-Newsome, 2018: Human Health. In Impacts, Risks, and Adaptation in the United States: Fourth National Climate Assessment, Volume II [Reidmiller, D.R., C.W. Avery, D.R. Easterling, K.E. Kunkel, K.L.M. Lewis, T.K. Maycock, and B.C. Stewart (eds.)]. U.S. Global Change Research Program, Washington, DC, USA, pp. 539–571. doi: 10.7930/NCA4.2018.CH14.

health or homeowner insurance. Finally, resiliency and adaptation are more difficult for economically vulnerable communities; they have less liquidity, individually and collectively, to move or to make the types of infrastructure or policy changes to limit or reduce the hazards they face. They frequently are less able to self-advocate for resources that would otherwise aid in building resilience and hazard reduction and mitigation.

The assessment literature cited in EPA's 2009 and 2016 Endangerment and Cause or Contribute Findings, as well as *Impacts of Climate Change on Human Health,* also concluded that certain populations and life stages, including children, are most vulnerable to climate-related health effects.[911] The assessment literature produced from 2016 to the present strengthens these conclusions by providing more detailed findings regarding related vulnerabilities and the projected impacts youth may experience. These assessments—including the NCA4 and *The Impacts of Climate Change on Human Health in the United States* (2016)—describe how children's unique physiological and developmental factors contribute to making them particularly vulnerable to climate change. Impacts to children are expected from heat waves, air pollution, infectious and waterborne illnesses, and mental health effects resulting from extreme weather events. In addition, children are among those especially susceptible to allergens, as well as health effects associated with heat waves, storms, and floods. Additional health concerns may arise in low-income households, especially those with children, if climate change reduces food availability and increases prices, leading to food insecurity within households.

The Impacts of Climate Change on Human Health[912] also found that some communities of color, low-income groups, people with limited English proficiency, and certain immigrant groups (especially those who are undocumented) live with many of the factors that contribute to their vulnerability to the health impacts of climate change. While difficult to isolate from related socioeconomic factors, race appears to be an important factor in vulnerability to climate-related stress, with elevated risks for mortality from high temperatures reported for Black or African American individuals compared to White individuals after controlling for factors such as air conditioning use. Moreover, people of color are disproportionately exposed to air pollution based on where they live, and disproportionately vulnerable due to higher baseline prevalence of underlying diseases such as asthma, so climate exacerbations of air pollution are expected to have disproportionate effects on these communities.

Native American Tribal communities possess unique vulnerabilities to climate change, particularly those impacted by degradation of natural and cultural resources within established reservation boundaries and threats to traditional subsistence lifestyles. Tribal communities whose health, economic well-being, and cultural traditions depend upon the natural environment will likely be affected by the degradation of ecosystem goods and services associated with climate change. The IPCC indicates that losses of customs and historical knowledge may cause communities to be less resilient or adaptable.[913] The NCA4 noted that while Indigenous peoples are diverse and will be impacted by the climate changes universal to all Americans, there are several ways in which climate change uniquely threatens Indigenous peoples' livelihoods and economies.[914] In addition, there can institutional barriers to their management of water, land, and other natural resources that could impede adaptive measures.

For example, Indigenous agriculture in the Southwest is already being adversely affected by changing patterns of flooding, drought, dust storms, and rising temperatures leading to increased soil erosion, irrigation water demand, and decreased crop quality and herd sizes. The Confederated Tribes of the Umatilla Indian Reservation in the Northwest have identified climate risks to salmon, elk, deer, roots, and huckleberry habitat. Housing and sanitary water supply infrastructure are vulnerable to disruption from extreme precipitation events.

NCA4 noted that Indigenous peoples often have disproportionately higher rates of asthma, cardiovascular disease, Alzheimer's, diabetes, and obesity, which can all contribute to increased vulnerability to climate-driven extreme heat and air pollution events. These factors also may be exacerbated by stressful situations, such as extreme weather events, wildfires, and other circumstances.

NCA4 and IPCC Fifth Assessment Report also highlighted several impacts specific to Alaskan Indigenous Peoples. Permafrost thaw will lead to more coastal erosion, exacerbated risks of winter travel, and damage to buildings, roads, and other infrastructure—these impacts on archaeological sites, structures, and objects will lead to a loss of cultural heritage for Alaska's Indigenous people. In terms of food security, the NCA4 discussed reductions in suitable ice conditions for hunting, warmer temperatures impairing the use of traditional ice cellars for food storage, and declining shellfish populations due to warming and acidification. While the NCA also noted that climate change provided more opportunity to hunt from boats later in the fall season or earlier in the spring, the assessment found that the net impact was an overall decrease in food security.

In addition, the U.S. Pacific Islands and the indigenous communities that live there are also uniquely vulnerable to the effects of climate change due to their remote location and geographic isolation. They rely on the land, ocean, and natural resources for their livelihoods, but they face challenges in obtaining energy and food supplies that need to be shipped in at high costs. As a result, they face higher energy costs than the rest of the nation and depend on imported fossil fuels for electricity generation and diesel. These challenges exacerbate the climate impacts that the Pacific Islands are experiencing. NCA4 notes that Indigenous peoples of the Pacific are threatened by rising sea levels, diminishing freshwater availability, and negative effects to ecosystem services that threaten these individuals' health and well-being.

2. Non-GHG Impacts

In Section V.B., in addition to GHG emissions impacts, we also discuss potential additional impacts to emissions of non-GHGs (*i.e.,* criteria and air toxic pollutants) that we estimate would result from compliance with the proposed GHG emission standards. This section VI.D.2 describes evidence that communities with EJ concerns are disproportionately impacted by the non-GHG emissions affected by this rule.

[911] 74 FR 66496, December 15, 2009; 81 FR 54422, August 15, 2016.

[912] USGCRP, 2016: The Impacts of Climate Change on Human Health in the United States: A Scientific Assessment. Crimmins, A., J. Balbus, J.L. Gamble, C.B. Beard, J.E. Bell, D. Dodgen, R.J. Eisen, N. Fann, M.D. Hawkins, S.C. Herring, L. Jantarasami, D.M. Mills, S. Saha, M.C. Sarofim, J. Trtanj, and L. Ziska, Eds. U.S. Global Change Research Program, Washington, DC, 312 pp. *http://dx.doi.org/10.7930/J0R49NQX.*

[913] Porter et al., 2014: Food security and food production systems.

[914] Jantarasami, L.C., R. Novak, R. Delgado, E. Marino, S. McNeeley, C. Narducci, J. Raymond-Yakoubian, L. Singletary, and K. Powys Whyte, 2018: Tribes and Indigenous Peoples. In Impacts, Risks, and Adaptation in the United States: Fourth National Climate Assessment, Volume II [Reidmiller, D.R., C.W. Avery, D.R. Easterling, K.E. Kunkel, K.L.M. Lewis, T.K. Maycock, and B.C. Stewart (eds.)]. U.S. Global Change Research Program, Washington, DC, USA, pp. 572–603. doi: 10.7930/NCA4.2018.CH15.

Numerous studies have found that environmental hazards such as air pollution are more prevalent in areas where people of color and low-income populations represent a higher fraction of the population compared with the general population.[915] [916] [917] Consistent with this evidence, a recent study found that most anthropogenic sources of $PM_{2.5}$, including industrial sources and light- and heavy-duty vehicle sources, disproportionately affect people of color.[918] In addition, compared to non-Hispanic Whites, some other racial groups experience greater levels of health problems during some life stages. For example, in 2018–2020, about 12 percent of non-Hispanic Black; 9 percent of non-Hispanic American Indian/Alaska Native; and 7 percent of Hispanic children were estimated to currently have asthma, compared with 6 percent of non-Hispanic White children.[919] Nationally, on average, non-Hispanic Black and Non-Hispanic American Indian or Alaska Native people also have lower than average life expectancy based on 2019 data, the latest year for which CDC estimates are available.[920]

We discuss near-roadway issues in Section VI.D.2.i and upstream sources in Section VI.D.2.ii.

i. Near-Roadway Analysis

As described in Section VI.B of this preamble, concentrations of many air pollutants are elevated near high-traffic roadways. We recently conducted an analysis of the populations within the CONUS living in close proximity to truck freight routes as identified in USDOT's FAF4.[921] FAF4 is a model from the USDOT's Bureau of Transportation Statistics (BTS) and Federal Highway Administration (FHWA), which provides data associated with freight movement in the United States [922] Relative to the rest of the population, people living near FAF4 truck routes are more likely to be people of color and have lower incomes than the general population. People living near FAF4 truck routes are also more likely to live in metropolitan areas. Even controlling for region of the country, county characteristics, population density, and household structure, race, ethnicity, and income are significant determinants of whether someone lives near a FAF4 truck route.

We additionally analyzed other national databases that allowed us to evaluate whether homes and schools were located near a major road and whether disparities in exposure may be occurring in these environments. Until 2009, the U.S. Census Bureau's American Housing Survey (AHS) included descriptive statistics of over 70,000 housing units across the nation and asked about transportation infrastructure near respondents' homes every two years.[923] [924] We also analyzed the U.S. Department of Education's Common Core of Data, which includes enrollment and location information for schools across the United States.[925]

In analyzing the 2009 AHS, we focused on whether a housing unit was located within 300 feet of a ''4-or-more lane highway, railroad, or airport'' (this distance was used in the AHS analysis).[926] We analyzed whether there were differences between households in such locations compared with those in locations farther from these transportation facilities.[927] We included other variables, such as land use category, region of country, and housing type. We found that homes with a non-White householder were 22–34 percent more likely to be located within 300 feet of these large transportation facilities than homes with White householders. Homes with a Hispanic householder were 17–33 percent more likely to be located within 300 feet of these large transportation facilities than homes with non-Hispanic householders. Households near large transportation facilities were, on average, lower in income and educational attainment and more likely to be a rental property and located in an urban area compared with households more distant from transportation facilities.

In examining schools near major roadways, we used the Common Core of Data (CCD) from the U.S. Department of Education, which includes information on all public elementary and secondary schools and school districts nationwide.[928] To determine school proximities to major roadways, we used a geographic information system (GIS) to map each school and roadways based on the U.S. Census's TIGER roadway file.[929] We estimated that about 10 million students attend schools within 200 meters of major roads, about 20 percent of the total number of public school students in the United States.[930] About 800,000 students attend public schools within 200 meters of primary roads, or about 2 percent of the total. We found that students of color were overrepresented at schools within 200 meters of primary roadways, and schools within 200 meters of primary roadways had a disproportionate population of students eligible for free or reduced-price lunches.[931] Black

[915] Rowangould, G.M. (2013) A census of the near-roadway population: public health and environmental justice considerations. Trans Res D 25: 59–67. *http://dx.doi.org/10.1016/j.trd.2013.08.003*.

[916] Marshall, J.D., Swor, K.R.; Nguyen, N.P (2014) Prioritizing environmental justice and equality: diesel emissions in Southern California. Environ Sci Technol 48: 4063–4068. *https://doi.org/10.1021/es405167f*.

[917] Marshall, J.D. (2008) Environmental inequality: air pollution exposures in California's South Coast Air Basin. Atmos Environ 21: 5499–5503. *https://doi.org/10.1016/j.atmosenv.2008.02.005*.

[918] C. W. Tessum, D. A. Paolella, S. E. Chambliss, J. S. Apte, J. D. Hill, J. D. Marshall, $PM_{2.5}$ polluters disproportionately and systemically affect people of color in the United States. Sci. Adv. 7, eabf4491 (2021).

[919] *http://www.cdc.gov/asthma/most_recent_data.htm*.

[920] Arias, E. Xu, J. (2022) United States Life Tables, 2019. National Vital Statistics Report, Volume 70, Number 19. [Online at *https://www.cdc.gov/nchs/data/nvsr/nvsr70/nvsr70-19.pdf*].

[921] U.S. EPA (2021). Estimation of Population Size and Demographic Characteristics among People Living Near Truck Routes in the Conterminous United States. Memorandum to the Docket.

[922] FAF4 includes data from the 2012 Commodity Flow Survey (CFS), the Census Bureau on international trade, as well as data associated with construction, agriculture, utilities, warehouses, and other industries. FAF4 estimates the modal choices for moving goods by trucks, trains, boats, and other types of freight modes. It includes traffic assignments, including truck flows on a network of truck routes. *https://ops.fhwa.dot.gov/freight/freight_analysis/faf/*.

[923] U.S. Department of Housing and Urban Development, & U.S. Census Bureau. (n.d.). Age of other residential buildings within 300 feet. In American Housing Survey for the United States: 2009 (pp. A–1). Retrieved from *https://www.census.gov/programs-surveys/ahs/data/2009/ahs-2009-summary-tables0/h150-09.html*.

[924] The 2013 AHS again included the ''etrans'' question about highways, airports, and railroads within half a block of the housing unit but has not maintained the question since then.

[925] *http://nces.ed.gov/ccd/*.

[926] This variable primarily represents roadway proximity. According to the Central Intelligence Agency's World Factbook, in 2010, the United States had 6,506,204 km of roadways, 224,792 km of railways, and 15,079 airports. Highways thus represent the overwhelming majority of transportation facilities described by this factor in the AHS.

[927] Bailey, C. (2011) Demographic and Social Patterns in Housing Units Near Large Highways and other Transportation Sources. Memorandum to docket.

[928] *http://nces.ed.gov/ccd/*.

[929] Pedde, M.; Bailey, C. (2011) Identification of Schools within 200 Meters of U.S. Primary and Secondary Roads. Memorandum to the docket.

[930] Here, ''major roads'' refer to those TIGER classifies as either ''Primary'' or ''Secondary.'' The Census Bureau describes primary roads as ''generally divided limited-access highways within the Federal interstate system or under state management.'' Secondary roads are ''main arteries, usually in the U.S. highway, state highway, or county highway system.''

[931] For this analysis we analyzed a 200-meter distance based on the understanding that roadways generally influence air quality within a few hundred meters from the vicinity of heavily traveled roadways or along corridors with significant trucking traffic. See U.S. EPA, 2014. Near Roadway Air Pollution and Health: Frequently Asked Questions. EPA–420–F–14–044.

students represent 22 percent of students at schools located within 200 meters of a primary road, compared to 17 percent of students in all U.S. schools. Hispanic students represent 30 percent of students at schools located within 200 meters of a primary road, compared to 22 percent of students in all U.S. schools.

We also reviewed existing scholarly literature examining the potential for disproportionate exposure among people of color and people with low socioeconomic status (SES). Numerous studies evaluating the demographics and socioeconomic status of populations or schools near roadways have found that they include a greater percentage of residents of color, as well as lower SES populations (as indicated by variables such as median household income). Locations in these studies include Los Angeles, CA; Seattle, WA; Wayne County, MI; Orange County, FL; and the State of California, and nationally.[932 933 934 935 936 937 938] Such disparities may be due to multiple factors.[939 940 941 942 943]

Additionally, people with low SES often live in neighborhoods with multiple stressors and health risk factors, including reduced health insurance coverage rates, higher smoking and drug use rates, limited access to fresh food, visible neighborhood violence, and elevated rates of obesity and some diseases such as asthma, diabetes, and ischemic heart disease. Although questions remain, several studies find stronger associations between air pollution and health in locations with such chronic neighborhood stress, suggesting that populations in these areas may be more susceptible to the effects of air pollution.[944 945 946 947]

Several publications report nationwide analyses that compare the demographic patterns of people who do or do not live near major roadways.[948 949 950 951 952 953] Three of these studies found that people living near major roadways are more likely to be people of color or of low SES.[954 955 956] They also found that the outcomes of their analyses varied between regions within the United States. However, only one such study looked at whether such conclusions were confounded by living in a location with higher population density and how demographics differ between locations nationwide.[957] In general, it found that higher density areas have higher proportions of low-income residents and people of color. In other publications assessing a city, county, or state, the results are similar.[958 959]

Two recent studies provide strong evidence that reducing emissions from heavy-duty vehicles is extremely likely to reduce the disparity in exposures to traffic-related air pollutants, both using NO_2 observations from the recently launched TROPospheric Ozone Monitoring Instrument (TROPOMI) satellite sensor as a measure of air quality, which provides the highest-resolution observations heretofore unavailable from any satellite.[960]

One study evaluated NO_2 concentrations during the COVID–19 lockdowns in 2020 and compared them to NO_2 concentrations from the same dates in 2019.[961] That study found that

[932] Marshall, J.D. (2008) Environmental inequality: air pollution exposures in California's South Coast Air Basin. Atmos Environ 42: 5499–5503. doi:10.1016/j.atmosenv.2008.02.00.

[933] Su, J.G.; Larson, T.; Gould, T.; Cohen, M.; Buzzelli, M. (2010) Transboundary air pollution and environmental justice: Vancouver and Seattle compared. GeoJournal 57: 595–608. doi:10.1007/s10708–009–9269–6.

[934] Chakraborty, J.; Zandbergen, P.A. (2007) Children at risk: measuring racial/ethnic disparities in potential exposure to air pollution at school and home. J Epidemiol Community Health 61: 1074–1079. doi:10.1136/jech.2006.054130.

[935] Green, R.S.; Smorodinsky, S.; Kim, J.J.; McLaughlin, R.; Ostro, B. (20042004) Proximity of California public schools to busy roads. Environ Health Perspect 112: 61–66. doi:10.1289/ehp.6566.

[936] Wu, Y; Batterman, S.A. (2006) Proximity of schools in Detroit, Michigan to automobile and truck traffic. J Exposure Sci & Environ Epidemiol. doi:10.1038/sj.jes.7500484.

[937] Su, J.G.; Jerrett, M.; de Nazelle, A.; Wolch, J. (2011) Does exposure to air pollution in urban parks have socioeconomic, racial, or ethnic gradients? Environ Res 111: 319–328.

[938] Jones, M.R.; Diez-Roux, A.; Hajat, A.; et al. (2014) Race/ethnicity, residential segregation, and exposure to ambient air pollution: The Multi-Ethnic Study of Atherosclerosis (MESA). Am J Public Health 104: 2130–2137. [Online at: *https://doi.org/10.2105/AJPH.2014.302135*.].

[939] Depro, B.; Timmins, C. (2008) Mobility and environmental equity: do housing choices determine exposure to air pollution? Duke University Working Paper.

[940] Rothstein, R. The Color of Law: A Forgotten History of How Our Government Segregated America. New York: Liveright, 2018.

[941] Lane, H.J.; Morello-Frosch, R.; Marshall, J.D.; Apte, J.S. (2022) Historical redlining is associated with present-day air pollution disparities in US Cities. Environ Sci & Technol Letters 9: 345–350. DOI: [Online at: *https://doi.org/10.1021/acs.estlett.1c01012*].

[942] Ware, L. (2021) Plessy's legacy: the government's role in the development and perpetuation of segregated neighborhoods. RSF: The Russel Sage Foundation Journal of the Social Sciences, 7:92–109. DOI: DOI: 10.7758/RSF.2021.7.1.06.

[943] Archer, D.N. (2020) ''White Men's Roads through Black Men's Homes'': advancing racial equity through highway reconstruction. Vanderbilt Law Rev 73: 1259.

[944] Clougherty, J.E.; Kubzansky, L.D. (2009) A framework for examining social stress and susceptibility to air pollution in respiratory health. Environ Health Perspect 117: 1351–1358. Doi:10.1289/ehp.0900612.

[945] Clougherty, J.E.; Levy, J.I.; Kubzansky, L.D.; Ryan, P.B.; Franco Suglia, S.; Jacobson Canner, M.; Wright, R.J. (2007) Synergistic effects of traffic-related air pollution and exposure to violence on urban asthma etiology. Environ Health Perspect 115: 1140–1146. doi:10.1289/ehp.9863.

[946] Finkelstein, M.M.; Jerrett, M.; DeLuca, P.; Finkelstein, N.; Verma, D.K.; Chapman, K.; Sears, M.R. (2003) Relation between income, air pollution and mortality: a cohort study. Canadian Med Assn J 169: 397–402.

[947] Shankardass, K.; McConnell, R.; Jerrett, M.; Milam, J.; Richardson, J.; Berhane, K. (2009) Parental stress increases the effect of traffic-related air pollution on childhood asthma incidence. Proc Natl Acad Sci 106: 12406–12411. doi:10.1073/pnas.0812910106.

[948] Rowangould, G.M. (2013) A census of the U.S. near-roadway population: public health and environmental justice considerations. Transportation Research Part D; 59–67.

[949] Tian, N.; Xue, J.; Barzyk. T.M. (2013) Evaluating socioeconomic and racial differences in traffic-related metrics in the United States using a GIS approach. J Exposure Sci Environ Epidemiol 23: 215–222.

[950] CDC (2013) Residential proximity to major highways—United States, 2010. Morbidity and Mortality Weekly Report 62(3): 46–50.

[951] Clark, L.P.; Millet, D.B., Marshall, J.D. (2017) Changes in transportation-related air pollution exposures by race-ethnicity and socioeconomic status: outdoor nitrogen dioxide in the United States in 2000 and 2010. Environ Health Perspect *https://doi.org/10.1289/EHP959*.

[952] Mikati, I.; Benson, A.F.; Luben, T.J.; Sacks, J.D.; Richmond-Bryant, J. (2018) Disparities in distribution of particulate matter emission sources by race and poverty status. Am J Pub Health *https://ajph.aphapublications.org/doi/abs/10.2105/AJPH.2017.304297?journalCode=ajph*.

[953] Alotaibi, R.; Bechle, M.; Marshall, J.D.; Ramani, T.; Zietsman, J.; Nieuwenhuijsen, M.J.; Khreis, H. (2019) Traffic related air pollution and the burden of childhood asthma in the continuous United States in 2000 and 2010. Environ International 127: 858–867. *https://www.sciencedirect.com/science/article/pii/S0160412018325388*.

[954] Tian, N.; Xue, J.; Barzyk. T.M. (2013) Evaluating socioeconomic and racial differences in traffic-related metrics in the United States using a GIS approach. J Exposure Sci Environ Epidemiol 23: 215–222.

[955] Rowangould, G.M. (2013) A census of the U.S. near-roadway population: public health and environmental justice considerations. Transportation Research Part D; 59–67.

[956] CDC (2013) Residential proximity to major highways—United States, 2010. Morbidity and Mortality Weekly Report 62(3): 46–50.

[957] Rowangould, G.M. (2013) A census of the U.S. near-roadway population: public health and environmental justice considerations. Transportation Research Part D; 59–67.

[958] Pratt, G.C.; Vadali, M.L.; Kvale, D.L.; Ellickson, K.M. (2015) Traffic, air pollution, minority, and socio-economic status: addressing inequities in exposure and risk. Int J Environ Res Public Health 12: 5355–5372. *http://dx.doi.org/10.3390/ijerph120505355*.

[959] Sohrabi, S.; Zietsman, J.; Khreis, H. (2020) Burden of disease assessment of ambient air pollution and premature mortality in urban areas: the role of socioeconomic status and transportation. Int J Env Res Public Health doi:10.3390/ijerph17041166.

[960] TROPospheric Ozone Monitoring Instrument (TROPOMI) is part of the Copernicus Sentinel-5 Precursor satellite.

[961] Kerr, G.H.; Goldberg, D.L.; Anenberg, S.C. (2021) COVID–19 pandemic reveals persistent disparities in nitrogen dioxide pollution. PNAS 118. [Online at *https://doi.org/10.1073/pnas.2022409118*].

average NO_2 concentrations were highest in areas with the lowest percentage of white populations, and that the areas with the greatest percentages of non-white or Hispanic populations experienced the greatest declines in NO_2 concentrations during the lockdown. These NO_2 reductions were associated with the density of highways in the local area.

In the second study, NO_2 measured from 2018–2020 was averaged by racial groups and income levels in 52 large U.S. cities.[962] Using census tract-level NO_2, the study reported average population-weighted NO_2 levels to be 28 percent higher for low-income non-White people compared with high-income white people. The study also used weekday-weekend differences and bottom-up emission estimates to estimate that diesel traffic is the dominant source of NO_2 disparities in the studied cities.

Overall, there is substantial evidence that people who live or attend school near major roadways are more likely to be of a non-White race, Hispanic, and/or have a low SES. We expect communities near roads will benefit from the reduced tailpipe emissions of PM, NO_X, SO_2, VOC, CO, and mobile source air toxics from heavy-duty vehicles in this proposal. EPA is considering how to better estimate the near-roadway air quality impacts of its regulatory actions and how those impacts are distributed across populations.

ii. Upstream Source Impacts

As described in Section V.B.2, we expect some non-GHG emissions reductions from sources related to refining petroleum fuels and increases in emissions from EGUs, both of which would lead to changes in exposure for people living in communities near these facilities. The EGU emissions increases become smaller over time because of changes in the projected power generation mix as electricity generation uses less fossil fuels; in 2055, the reductions in vehicle and refinery-related emissions of NO_X, VOC, $PM_{2.5}$, and SO_2 are larger than the EGU-related increases. Analyses of communities in close proximity to EGUs have found that a higher percentage of communities of color and low-income communities live near these sources when compared to national averages.[963] Analysis of populations near refineries also indicates there may be potential disparities in pollution-related health risk from that source.[964]

E. Economic Impacts

1. Impacts on Vehicle Sales, Fleet Turnover, Mode Shift, Class Shift and Domestic Production

In this section, we qualitatively discuss the impacts the proposed regulation may have on HD vehicle sales, including pre-buy and low-buy decisions, effects on decisions regarding the mode of transportation used to move goods, possible shifting of purchases between HD vehicle classes, and possible effects on domestic production of HD vehicles. Pre-buy occurs when a purchaser pulls ahead a planned future purchase to make the purchase prior to the implementation of an EPA regulation in anticipation that a future vehicle may have a higher upfront cost, a higher operational cost, or have reduced reliability due to the new regulation. Low-buy occurs when a vehicle that would have been purchased after the implementation of a regulation is either not purchased at all, or the purchase is delayed due to the regulation. Low-buy may occur directly as a function of pre-buy (where a vehicle was instead purchased prior to implementation of the new regulation), or due to a vehicle purchaser delaying the purchase of a vehicle due to cost or uncertainty. Pre- and low-buy are short-term effects, with research indicating that effects are seen for one year or less before and after a regulation in implemented.[965] Pre-buy and low-buy impact fleet turnover, which can result in a level of emission reduction attributable to the new emission standards that is different from the level of emission reduction EPA estimated would be achieved by the new regulation.

Additional possible, though unlikely, effects of this proposed regulation include mode shift, class shift and effects on domestic production. Mode shift would occur if goods that would normally be shipped by HD vehicle are instead shipped by another method (*e.g.,* rail, boat, air) as a result of this action. Class shift occurs when a vehicle purchaser decides to purchase a different class of vehicle than originally intended due to the new regulation. For example, a purchaser may buy a Class 8 vehicle instead of the Class 7 vehicle they may have purchased in the absence of a regulation. Domestic production could be affected if the regulation creates incentives for manufacturers to shift between domestic and foreign production.

i. Vehicle Sales and Fleet Turnover

The proposed emission standards may lead to a change in the timing of planned vehicle purchases, phenomena known as ''pre-buy'' and ''low-buy.'' Pre-buy occurs when purchasers of HD vehicles pull their planned future vehicle purchase forward to the months before a regulation is implemented compared to when they otherwise would have purchased a new vehicle in the absence of the regulation. Pre-buy may occur due to expected cost increases of post-regulation vehicles, or in order to avoid perceived cost, quality, or other changes associated with new emission standards. Another reason pre-buy might occur is due to purchaser beliefs about the availability of their vehicle type of choice in the post-regulation market. For example, if purchasers think that they might not be able to get the HD ICE vehicle they want after the proposed regulation is promulgated, they may pre-buy an ICE vehicle. Pre-buy, to the extent it might occur, could be mitigated in multiple ways, including by reducing the higher upfront cost of post-regulation vehicles, by purchasers considering the lower operational costs of post-regulation vehicles when making their purchase decision, or through the phasing in of the proposed standards. With respect to possible purchaser anxiety over being unable to purchase an ICE vehicle after promulgation of the proposed regulation, we expect that the federal vehicle and battery tax credits in the IRA, as well as purchasers' consideration of the lower operational costs of ZEVs, would mitigate possible pre-buy by reducing the perceived purchase price or lifetime operational costs difference of a new, post-rule ZEV compared to a new pre- or post-rule ICE vehicle. Additionally, pre-buy may be mitigated by educating purchasers on benefits of ZEV ownership (for example, reduced operational costs) or on charging and hydrogen refueling infrastructure technology and

[962] Demetillo, M.A.; Harkins, C.; McDonald, B.C.; et al. (2021) Space-based observational constraints on NO_2 air pollution inequality from diesel traffic in major US cities. Geophys Res Lett 48, e2021GL094333. [Online at *https://doi.org/10.1029/2021GL094333*].

[963] See 80 FR 64662, 64915–64916 (October 23, 2015).

[964] U.S. EPA (2014). Risk and Technology Review—Analysis of Socio-Economic Factors for Populations Living Near Petroleum Refineries. Office of Air Quality Planning and Standards, Research Triangle Park, North Carolina. January.

[965] See the EPA report ''Analysis of Heavy-Duty Vehicle Sales Impacts Due to New Regulation'' at *https://cfpub.epa.gov/si/si_public_pra_view.cfm?dirEntryID=349838&Lab=OTAQ* for a literature review and EPA analysis of pre-buy and low-buy due to HD regulations.

availability.[966] Our proposed standards will increase purchaser exposure to ZEVs, as well as incentivize manufacturers and dealers to educate HD vehicle purchasers on ZEVs, including the benefits of ZEVs, accelerating the reduction of purchaser risk aversion. In addition, we expect recent congessional actions to support ZEV infrastructure and supply chain, including the CHIPS Act, BIL and IRA, will reduce uncertainty related to infrastructure.[967] We note that the proposed standards do not mandate the use of a specific technology, and EPA anticipates that a compliant fleet under the proposed standards would include a diverse range of technologies, including ICE and ZEV technologies. The phasing-in of the proposed standards, which do not eliminate any specific technology from the market, would allow ample time for purchasers to make decisions about their vehicle of choice.

In addition to pre-buy, there is the possibility of ''low-buy'' occurring in response to new regulation. In a low-buy scenario, sales of HD vehicles would decrease in the months after a regulation becomes effective, compared to what would have happened in the absence of a regulation, due to purchasers either pre-buying or delaying a planned purchase. Low-buy may be directly attributable to pre-buy, where purchases originally planned for the months following the effective date of new emission standards are instead purchased in the months preceding the effective date of the new emission standards. Low-buy may also be attributable to purchasers delaying the planned purchase of a new vehicle due to the new emission standards, and may occur for reasons such as increased costs or uncertainty about the new vehicles. If pre-buy is smaller than low-buy, to the extent both might occur, this would lead to a slower fleet turnover, at least in the short term.[968] In this scenario, older HD vehicles would remain in use longer than they would have in the absence of the new emission standards. This would lead to lower emission reductions than we estimate would be achieved as a result of the proposed emission standards. Conversely, if pre-buy is larger than low-buy, short-term fleet turnover would increase; fleets would, on average, be comprised of newer model year vehicles. Though these new vehicles are expected to have lower emissions than the vehicles they are replacing, and emission reductions would be expected to be larger than under a scenario where low-buy exceeds pre-buy, emission reductions would still be lower than we estimated would be achieved as a result of the proposed emission standards. Under a situation where low-buy matches pre-buy, we would also expect lower emission reductions than estimated, and emission reductions would likely be somewhere between the two relative pre-buy/low-buy scenarios discussed in the previous paragraph. We expect low-buy, to the extent that it might occur, to be mitigated under the same circumstances described in this section for pre-buy.

Analysis of previously promulgated EPA HD emission standards indicates that where pre-buy or low-buy has been seen, the magnitude of these phenomena has been small.[969] Recent analysis conducted by EPA of pre-buy and low-buy indicates that pre-buy and low-buy effects typically occur for up to one year before or one year after a regulation becomes effective, if pre-buy or low-buy occur at all.[970] EPA contracted with ERG to complete a literature review of research estimating HD vehicle sales impacts resulting from HD regulations, and to conduct original research to estimate the existence and magnitude of pre-buy and low-buy sales impacts of previous EPA HD regulations.[971] The resulting analysis examined the effect of four HD regulations (those that became effective in 2004, 2007, 2010 and 2014) on the sales of Class 6, 7 and 8 vehicles over the twelve months before and after each standard. For the purposes of this discussion, we will call these the 2004 rule, 2007 rule, 2010 rule and 2014 rule. The 2004, 2007 and 2010 rules focused on reducing criteria pollutant emissions from HD vehicles and engines, and the 2014 rule (the HD GHG Phase 1 rule promulgated in 2014) focused on reducing GHG emissions from HD vehicles and engines.[972] The ERG report found little evidence of pre-buy or low-buy sales impacts on Class 6 and 7 vehicles for any of the rules. For Class 8 vehicles, evidence of pre-buy was found for up to eight months before promulgation of the 2010 rule, as well as for up to one month prior to promulgation of the 2014 rule. Evidence of low-buy was found after promulgation of the 2002 (up to six months), 2007 (up to 12 months) and 2010 rules (up to five months). The results of the ERG report also suggest that the range of possible results include a lower bound of zero, or no pre-buy or low-buy due to EPA rules.

While it is instructive that the ERG report found little to no pre-buy or low-buy effects due to our HD rules, EPA does not believe the approach to estimate a change in the sales of HD vehicles before and after the promulgation of a rule due to the cost of that rule (as was done in the ERG report) should be used to estimate sales effects from this proposed rule for three main reasons.[973] First, as outlined in the previous paragraph, most of the statistically significant sales effects in the ERG report were estimated using data from criteria pollutant rules (the 2002, 2004 and 2007 rules), which are not appropriate for use in estimating effects from HD GHG rules. This is because differences in how costs are incurred and benefits are accrued as a result of HD vehicle criteria pollutant regulations versus HD GHG regulations

[966] For more information on purchaser acceptance of HD ZEVs, see DRIA Chapter 6.2. For more information on the charging and hydrogen refueling infrastructure analysis in this proposed rule, see DRIA Chapter 2.6.

[967] The CHIPS Act is the Creating Helpful Incentives to Produce Semiconductors and Science Act and was signed into lay on August 9, 2022. It is designed to strengthen supply chains, domestic manufacturing and national security. More information on how all of these Acts are expected to support opportunities for growth along the supply chain can be found in the January 2023 White House publication ''Building a Clean Energy Economy: A Guidebook to the Inflation Reduction Act's Investments in Clean Energy and Climate Action.'' found online at *https://www.whitehouse.gov/wp-content/uploads/2022/12/Inflation-Reduction-Act-Guidebook.pdf.*

[968] Fleet turnover refers to the pace at which new vehicles are purchased and older vehicles are retired. A slower fleet turnover means older vehicles are kept on the road longer, and the fleet is older on average. A faster fleet turnover means that the fleet is younger, on average.

[969] For example, Lam and Bausell (YEAR), Rittenhouse and Zaragoza-Watkins (YEAR), and an unpublished report by Harrison and LeBel (2008). For EPA's summary on these studies, see the EPA peer review cited in the footnote below, or the recently published EPA Heavy-Duty 2027 rule at Docket ID EPA–HQ–2019–0555.

[970] ''Analysis of Heavy-Duty Vehicle Sales Impacts Due to New Regulation.'' At *https://cfpub.epa.gov/si/si_public_pra_view.cfm?dirEntryID=349838&Lab=OTAQ.*

[971] ''Analysis of Heavy-Duty Vehicle Sales Impacts Due to New Regulation.'' At *https://cfpub.epa.gov/si/si_public_pra_view.cfm?dirEntryID=349838&Lab=OTAQ.*

[972] The 2004 rule, 'Final Rule for Control of Emission of Air Pollution From Highway Heavy-Duty Engines', was finalized in 1997. The 2007 and 2010 rules were finalized as phase-ins in the 'Final Rule for Control of Emissions of Air Pollution from 2004 and Later Model Year Heavy-Duty Highway Engines and Vehicles; Revision of Light-Duty On-Board Diagnostics Requirements' in 2000. The 2014 GHG rule, 'Final Rule for Phase 1 Greenhouse House Emissions Standards and Fuel Efficiency Standards for Medium- and Heavy-Duty Engines and Vehicles,' was finalized in 2011. These rules can be found on the EPA website *https://www.epa.gov/regulations-emissions-vehicles-and-engines/regulations-emissions-commercial-trucks-and-buses-heavy.*

[973] See the RIA for the HD 2027 rule for an example of how we might estimate potential impacts of a HD regulation on vehicle sales, including pre-buy and low-buy using the approach introduced in the ERG report. 87 FR 17590. March 28, 2022.

may lead to differences in how HD vehicle buyers react to a particular regulation. For example, the 2014 rule [974] led to reductions in GHG emissions and had lower associated technology costs compared to the criteria pollutant rules, and compliance with the GHG regulation was associated with fuel savings. We also expect fuel savings effects in this proposal, as described in Section IV. Second, the pre-buy and low-buy sales effects were estimated as a function of the average change in cost of a HD vehicle for each vehicle class due to the specific rule under consideration (for example, the 2007 rule or 2014 rule). However, unlike criteria pollutant rules, there were multiple pathways to compliance with 2014 rule, and therefore uncertainty in the price change due to the rule, which led to uncertainty in the results estimated using these price changes. Third, the approach outlined in the ERG report was estimated only using HD ICE vehicle data (*i.e.,* cost of compliance due to adding technology to a HD ICE engine). The research and methodology in the ERG report did not include any data from the production, sale, or purchase of HD ZEVs. For these reasons, we are not using the method in the ERG report to estimate sales effects due to this rule. We request comment on data or methods to estimate the possible effects of this regulation on the sale of HD ICE vehicles and HD ZEV sales, including potential impacts associated with pre-buy and low-buy.

This proposed rulemaking would be expected to lead to reductions in emissions across the HD vehicle fleet (Section V of this preamble), though such reductions are expected to happen gradually as the HD fleet turns over. This is because the fraction of the total HD vehicle fleet that is new ZEVs would initially be a small portion of the entire HD market. As more HD ZEVs are sold, and as older HD ICE vehicles are retired, greater emission reductions are expected to occur. The emission reductions attributable to each HD segment that would be affected by this proposed rule would depend on many factors, including the individual increase in ZEV adoption in each market segment over time, as well as relative usage, measured in VMT, for a HD ZEV when compared to a similar HD ICE vehicle. For example, if ZEV uptake occurs faster than predicted, emission reductions would happen faster than estimated. If, assuming no change in total fleet VMT, the VMT attributed to a HD ZEV is less than that of the HD ICE vehicle it is displacing, emission reductions would happen slower than estimated. In addition, if pre-buy or low-buy occurs as a result of this proposed rulemaking, emission reductions would be smaller than anticipated. This is because, under pre-buy conditions, the pre-bought vehicles will not be subject to the tighter emission standards, and are less likely to be ZEVs; however, the pre-bought new vehicles are likely to be less polluting than the older HD vehicles they are replacing due to more stringent HD emission standards for new engines and vehicles (if it is a replacement purchase). Under low-buy, we would expect older, more polluting, HD vehicles would remain in use longer than they otherwise would in the absence of new regulation. We expect pre-buy and low-buy to be very small, if they occur at all. For more information on sales impacts, see Chapter 6.1.1 of the DRIA. We request comment on data and methods to estimate possible effects of the proposed emission standards on fleet turnover and to estimate the VMT of HD ZEVs in comparison to HD ICE vehicles.

ii. Mode Shift

Another potential, though unlikely, effect of this proposed regulation may be mode shift. Mode shift would occur if goods that would normally be shipped by HD vehicle are instead shipped by another method (*e.g.,* rail, boat, air) as a result of this action. Whether shippers switch to a different mode of transportation for freight depends not only on the cost per mile of the shipment (*i.e.,* freight rate), but also the value of the shipment, the speed of transport needed for shipment (for example, for non-durable goods), and the availability of supporting infrastructure (*e.g.,* rail lines, highways, waterways). Shifting from HD vehicles to other modes of transportation may occur if the cost of shipping goods by HD vehicles increases relative to other modes of transport, and it is feasible to switch the shipment from truck to another mode of transport. Chapter 3.3 of the DRIA and Section IV.D of this preamble discuss the estimated decrease in operational costs of this proposed rule, mainly due to the increase in the share of ZEVs in the on-road HD fleet. Because the effects of this proposed action are expected to reduce operational costs for trucks, we do not think mode shift would be a likely outcome of this proposed regulation.[975] We are asking for comment on data and methods to estimate possible effects of the proposed emission standards on mode shift. For more information on mode shift, see Chapter 6.1.2 of the DRIA.

iii. Class Shift

Class shift is also a possible effect of this proposed rule. Class shift would occur if purchasers shift their purchases from one class of vehicle to another class of vehicle due to differences in cost among vehicle types. We expect that class shifting, if it does occur, would be limited. The proposed emission standards are projected to lead to an increase in the incremental cost per vehicle for many classes of vehicles across both vocational vehicles and tractor categories before accounting for the IRA vehicle and battery tax credits. After accounting for these credits, our estimates show that this upfront increase in cost is reduced, and in fact, we estimate that some vocational vehicles and tractor ZEVs have lower or equivalent upfront costs compared to comparable ICE vehicles. For more information, see Preamble Section IV.D or DRIA Chapter 3.4. Furthermore, the upfront costs for vocational vehicles and tractors would be offset by operational cost savings.

Another reason EPA believes class shift would be limited, if it occurs, is that HD vehicles are typically configured and purchased to perform a specific function. For example, a concrete mixer is purchased to transport concrete, or a combination tractor is purchased to move freight with the use of a trailer. In addition, a purchaser in need of a specific vocational vehicle, such as a bus, box truck or street sweeper, would not be able to shift the purchase to a vehicle with a less stringent emission standard (such as the optional custom chassis standards for emergency vehicles, recreational vehicles, or mixed use (nonroad) type vehicles) and still meet their needs. The purchaser makes decisions based on many attributes of the vehicle, including the gross vehicle weight rating or gross combined weight rating of the vehicle, which in part determines the amount of freight or equipment that can be carried. Due to this, it may not be feasible for purchasers to switch to other vehicle classes. If a limited amount of shifting were to occur, we would expect negligible emission impacts (compared

[974] 'Final Rule for Phase 1 Greenhouse House Emissions Standards and Fuel Efficiency Standards for Medium- and Heavy-Duty Engines and Vehicles' can be found at *https://www.epa.gov/regulations-emissions-vehicles-and-engines/final-rule-phase-1-greenhouse-gas-emissions-standards.*

[975] If manufacturers comply by adding technology to ICE vehicles, we would also expect to see reduced operational costs through reduced fuel consumption.

to those emission reductions estimated to occur as a result of the proposed emission standards) because the vehicle classes that would be feasibly 'switched' are all subject to this proposed rule. We request comment on data or methods to estimate the effect the proposed emission standards might have on class shifting.

iv. Domestic Production

The proposed emission standards are not expected to provide incentives for manufacturers to shift between domestic and foreign production. This is because the emission standards apply to vehicles sold in the United States regardless of where such vehicles are produced. If foreign manufacturers already have increased expertise in satisfying the requirements of the emission standards, there may be some initial incentive for foreign production. However, given increasing global interest in reducing vehicle emissions, specifically through the use of ZEVs, as domestic manufacturers produce vehicles with reduced emissions, including ZEVs, the opportunity for domestic manufacturers to sell in other markets might increase. To the extent that the proposed emission standards might lead to application and use of technologies that other countries may seek now or in the future, developing this capacity for domestic producers now may provide some additional ability to serve those markets.

As discussed in Preamble Section 1.C, and DRIA Chapter 1, the IRA contains tax credit incentives that are impacted by the location of production and may encourage domestic production of ZEV vehicles or components. A portion of these tax incentives are included in our cost analysis for the proposed rule, as describe in Section IV, and DRIA Chapter 3. We request comment on whether our standards would impact the domestic production of HD vehicle components.

2. Purchaser Acceptance

We expect this proposed rule to lead to an increase in the adoption of HD BEVs and FCEVs for most HD vehicle types beginning in MY 2027 (see Section II of this preamble or DRIA Chapter 2 for details). Businesses that operate HD vehicles are under competitive pressure to reduce operating costs, which should encourage purchasers to identify and rapidly adopt new vehicle technologies that reduce operating costs. As outlays for labor and fuel generally constitute the two largest shares of HD vehicle operating costs, depending on the price of fuel, distance traveled, type of HD vehicle, and commodity transported (if any), businesses that operate HDVs face strong incentives to reduce these costs.[976] [977] As explained in Section IV and Chapter 3 of the DRIA, though HD ZEVs in general have higher upfront costs than comparable ICE vehicles, our costs analysis shows that the incremental upfront cost difference between a ZEV and a comparable ICE vehicle would be partially or fully offset by a combination of the federal vehicle tax credit and battery tax credit for HD ZEVs that are available through MY 2032 and operational savings.[978] For the vehicle types for which we propose new CO_2 emission standards, we expect that the ZEVs will have a lower total cost of ownership when compared to a comparable ICE vehicle (even after considering the upfront cost of purchasing the associated EVSE for a BEV), due to the expected cost savings in fuel, maintenance, and repair over the life of the HD ZEV when compared to comparable ICE vehicle. See Section IV of this preamble and Chapter 3 of the DRIA for more information on the estimated costs of this proposed rule.

In DRIA Chapter 6.2, we discuss the possibility that an ''energy efficiency gap'' or ''energy paradox'' has existed, where available technologies that would reduce the total cost of ownership for the vehicle (when evaluated over their expected lifetimes using conventional discount rates) have not been widely adopted, or the adoption is relatively slow, despite their potential to repay buyers' initial investments rapidly. We recognize that there are factors that may impact adoption of HD ZEVs, including uncertainty related to the technology and supporting infrastructure, as well as incentives created by this proposed rule for manufacturers to develop ZEV technology and educate purchasers.

We expect that adoption rates of HD ZEVs will be impacted by buyers taking advantage of existing incentives, specifically the IRA vehicle tax credit and battery tax credit, as well as the extent to which buyers consider the cost savings of purchasing a ZEV over a HD ICE vehicle in their purchase decision, mainly observed through operational cost savings. We expect purchasing decisions would also be affected by purchasers' impressions of charging infrastructure support and availability, perceptions of the comparisons of quality and durability of the different HD powertrains, and resale value of the vehicle.

The availability of existing incentives, specifically the Federal purchaser and battery manufacturing tax credits in the IRA, is expected to lead to lower upfront costs for purchasers of HD ZEVs than would otherwise occur.[979] We expect this will result in a higher ZEV adoption rate than would otherwise exist absent such incentives. In addition, as purchasers consider more of the operational cost savings of a ZEV over a comparable ICE vehicle in their purchase decision, the smaller the impact of the higher upfront costs for purchasers of a ZEV compared to an ICE vehicle has on that decision, and purchasers are more likely to purchase a ZEV. We note that ZEVs may not be purchased at the rates estimated in the analysis for this proposed rule. They may be smaller if purchasers do not consider the full, or even a portion of, value of operational cost savings, which may happen due to uncertainty, *e.g.,* uncertainty about future fuel prices. Additionally, this may occur if a principal-agent problem exists, causing split incentives.[980] A principal-agent problem would exist if truck operators (agents) and truck purchasers who are not also operators (principals) value operational cost savings differently (split incentives), which could lead to differences in purchase decisions between truck operators and truck purchasers. For example, a HD vehicle purchaser may not be directly responsible for the future fuel costs of the vehicle they purchase, or the person who would be responsible for those fuel costs may not be involved in the purchase decision. In this case, truck operators may place a higher value on the potential savings in operational costs over the lifetime of a vehicle and give less weight to the increase in upfront cost that may be associated with a ZEV purchase, whereas a truck purchaser may weigh higher upfront costs more heavily than possible operational cost savings. Such potential split incentives, or market failures, could lead to lower ZEV adoption rates than we are estimating in this proposal, which may reduce the non-GHG environmental benefits of the proposed emission standards due to lower non-

[976] American Transportation Research Institute, *An Analysis of the Operational Costs of Trucking*, September 2013. Docket ID: EPA–HQ–OAR–2014–0827–0512.

[977] Transport Canada, Operating Cost of Trucks, 2005. Docket ID: EPA–HQ–OAR–2014–0827–0070.

[978] For more information on the Federal tax credits, see Section I.C.

[979] Note that the incentives exist in the baseline and under the scenario with our proposed standards.

[980] A principal-agent problem happens when there is a conflict in priorities (split incentives) between a ''principal,'' or the owner of an asset, and an ''agent,'' or the the person to whom control of the asset has been delegated, such as a manager or HD vehicle operator.

GHG emission reductions than estimated in this proposal. Other examples of this might include if a purchaser values charging or fueling infrastructure, either the cost of installation or the availability, differently than the operator. The direction of the effect in this case would depend on who was responsible for the cost of the infrastructure installation, or who places more value on the availability of widespread infrastructure.

Uncertainty about ZEV technology, charging infrastructure technology and availability for BEVs, or hydrogen refueling infrastructure for FCEVs, may affect ZEV adoption rates. As ZEVs become increasingly more affordable and ubiquitous, we expect uncertainty related to these technologies will diminish over time. As uncertainty related to these technologies decreases, it may lead to higher rates of ZEV adoption that estimated. In addition, ZEVs may be purchased at higher rates than estimated in the analysis if, for example, ZEV costs decrease faster than expected, or due to increasing commitments from fleet owners or operators to purchase ZEVs.

We expect that the Federal vehicle and battery tax credits in the IRA, as well as purchasers' consideration of the lower operational costs of ZEVs, would mitigate any possible pre-buy by reducing the perceived purchase price or lifetime operational costs difference of a new, post-rule ZEV compared to a new pre- or post-rule ICE vehicle. We expect this would increase purchaser willingness to purchase a new ZEV. When purchasers are educated on charging or refueling infrastructure technology and availability, both as it stands at the time of possible purchase, as well as plans for future availability, uncertainty related to operating a new ZEV decreases.

EPA recognizes that there is uncertainty related to ZEVs that may impact the adoption of this technology even though it reduces operating costs. Markets for both new and used HD vehicles may face these problems, although it is difficult to assess empirically the degree to which they do. We expect the proposed Phase 3 standards, if finalized, will help overcome such barriers by incentivizing the development of ZEV technologies and the education of HD vehicle purchasers on ZEV benefits and infrastructure.

We request comment and data on acceptance of HD ZEVs.

3. VMT Rebound

Historically, the ''rebound effect'' has been interpreted as more intensive vehicle use, resulting in an increase in liquid fuel in response to increased ICE vehicle fuel efficiency. Although much of this possible vehicle use increase is likely to take the form of an increase in the number of miles vehicles are driven, it can also take the form of an increase in the loaded operating weight of a vehicle or altering routes and schedules in response to improved fuel efficiency. More intensive use of those HD ICE vehicles consumes fuel and generates emissions, which reduces the fuel savings and avoided emissions that would otherwise be expected to result from increasing fuel efficiency of HD ICE vehicles.

Unlike the LD vehicle rebound effect, there is little published literature on the HD vehicle rebound effect, and all of it focuses on the rebound effect due to increased ICE fuel efficiency. Winebrake et al. (2015) suggests that vocational trucks and tractor trailers have a rebound effect of essentially zero. Leard et al. (2015) estimate that tractor trailers have a rebound effect of 30 percent, while vocational vehicles have a 10 percent rebound rate.[981] Patwary et al. (2021) estimated that the average rebound effect of the U.S. road freight sector is between about 7 to 9 percent, although their study indicated that rebound has increased over time.[982] This is slightly smaller than the value found by Leard et al. (2015) for the similar sector of tractors. We do not have data that operational cost savings of switching from an ICE vehicle to a ZEV will affect the VMT driven of that vehicle, nor do we have data on how changing fuel prices might affect VMT of ZEVs over time. Given the increasing penetration of ZEVs in the HD fleet, and the estimated increase over the time frame of this proposed rule, we do not believe the rebound estimates in literature cited here are appropriate for use in our analysis. Therefore, we are not estimating any VMT rebound due to this rule. We request comment on the VMT response of HD ICE vehicles and HD ZEVs due to this rule, including the response of increasing efficiency within ICE vehicles, as well as the response to switching from an ICE vehicle to a ZEV. We request comment and data on the rebound assumptions for HD ICE vehicles and HD ZEVs.

4. Employment Impacts

Economic theories of labor demand indicate that employers affected by environmental regulation may change their demand for different types of labor in different ways, increasing demand for some types, decreasing demand for other types, or not changing it at all for still other types. A variety of conditions can affect employment impacts of environmental regulation, including baseline labor market conditions and employer and worker characteristics such as industry and region. A growing body of literature has examined employment effects of environmental regulation. Morgenstern et al. decompose the labor consequences in a regulated industry facing increased abatement costs.[983] This study identifies three separate components of labor demand effects. First, there is a demand effect caused by higher production costs, which in turn, results in increased market prices. Increased market prices reduce consumption (and production), thereby reducing demand for labor within the regulated industry. Second, there is a cost effect. As production costs increase, manufacturing plants use more of all inputs, including labor, to produce the same level of output. Third, there is a factor-shift effect, which occurs when post-regulation production technologies may have different labor intensities than pre-regulation production technologies.[984]

Due to a lack of data, we are not able to estimate employment effects from this proposed rule. The overall effect of the proposed rule on employment in the heavy-duty vehicle manufacturing sector depends on the relative magnitude of factor-shift, cost, and demand effects, as well as possible differences in employment related to HD ICE and ZEV manufacturing. As markets shift to HD ZEVs, employment needs will shift as well. In Chapter 6.4.2 of the DRIA, we show that the amount of labor per million dollars in sales in motor vehicle manufacturing sectors has generally declined over time, indicating that fewer people have been needed to produce the same value of goods. For example, in 1997, motor vehicle body and trailer manufacturing employed

[981] Leard, B., Linn, J., McConnell, V., and Raich, W. (2015). Fuel Costs, Economic Activity, and the Rebound Effect for Heavy-Duty Trucks. Resources For the Future Discussion Paper, 14–43.

[982] Patwary, A. L., Yu, T. E., English, B.C., Hughes, D. W., and Cho, S. H. (2021). Estimating the rebound effect of the US road freight transport. Transportation Research Record, 2675(6), 165–174.

[983] Morgenstern, R.D.; Pizer, W.A.; and Shih, J.-S. ''Jobs Versus the Environment: An Industry-Level Perspective.'' Journal of Environmental Economics and Management 43: 412–436. 2002.

[984] Additional literature using similar frameworks include Berman and Bui (2001) and Deschênes (2018). For more information on this literature, see the Chapter 10 of the RIA for the HD2027 rule, found at Docket ID EPA–HQ–OAR–2019–0055.

almost 3.4 employees per million dollars in sales. This fell to almost 2.7 in 2021. In the electrical equipment manufacturing sector, which is involved in the production of EVs, employment has increased from almost 2.3 to almost 2.7 per million dollars from 2007 to 2021. The International Union, United Automobile, Aerospace and Agricultural Implement Workers of America (UAW) states that re-training programs will be needed to support auto workers in a market with an increasing share of electric vehicles in order to prepare workers that might be displaced by the shift to the new technology.[985] Volkswagen states that labor requirements for ICE vehicles are about 70 percent higher than their electric counterpart, but these changes in employment intensities in the manufacturing of the vehicles can be offset by shifting to the production of new components, for example batteries or battery cells.[986] Climate Nexus indicates that transitioning to electric vehicles will lead to a net increase in jobs, a claim that is partially supported by the rising investment in batteries, vehicle manufacturing and charging stations.[987] Though most of these statements are specifically referring to light-duty vehicles, they hold true for the HD market as well. The expected investment mentioned by Climate Nexus is also supported by recent Federal investment which will allow for increased investment along the vehicle supply chain, including domestic battery manufacturing, charging infrastructure, and vehicle manufacturing, both in the LD and HD markets.[988] This investment includes the BIL, the CHIPS Act,[989] and the IRA, which are expected to create domestic employment opportunities along the full automotive sector supply chain, from components and equipment manufacturing and processing to final assembly, as well as incentivize the development of reliable EV battery supply chains.[990] For example, the IRA is expected to impact domestic employment through conditions on eligibility for purchase incentives and battery manufacturing incentives. These conditions include contingencies for domestic assembly, domestic critical materials production, and domestic battery manufacturing. The BlueGreen Alliance and the Political Economy Research Institute estimate that IRA will create over 9 million jobs over the next decade, with about 400,000 of those jobs being attributed directly to the battery and fuel cell vehicle provisions in the act.[991] In addition, the IRA is expected to lead to increased demand in ZEVs through tax credits for purchasers of ZEVs.

The factor-shift effect on employment reflects potential employment changes due to changes in labor intensity of production resulting from compliance activities. The proposed standards do not mandate the use of a specific technology, and EPA anticipates that a compliant fleet under the proposed standards would include a diverse range of technologies including ICE and ZEV technologies. In our assessment that supports the appropriateness and feasibility of the proposed standards, we developed a technology pathway that could be used to meet each of the standards, which project the increased ZEV adoption rates. ZEVs and ICE vehicles require different inputs and have different costs of production, though there are some common parts as well. There is little research on the relative labor intensity needs of producing a HD ICE vehicle versus producing an equivalent HD ZEV. Though there are some news articles and research from the light-duty motor vehicle market, they do not provide a clear indication of the relationship between employment needs for ZEVs and ICE vehicles. Some studies find that LD BEVs are less complex, requiring fewer person-hours to assemble than an equivalent ICE vehicle.[992] Others find that there is not a significant difference in the employment needed to produce ICE vehicles when compared to ZEVs.[993] We do not have data on employment differences in traditional ICE manufacturing sectors and ZEV manufacturing sectors, especially for expected effects in the future, nor do we have data on the employment needed for the level of battery production we anticipate will be required to meet future HD ZEV demand. We request comment on data concerning the potential employment impacts of HD component and vehicle manufacturing of ZEVs, including batteries.

The demand effect reflects potential employment changes due to changes in new HD vehicle sales. If HD ICE vehicle sales decrease, fewer people would be needed to assemble trucks and the components used to manufacture them. On the other hand, if HD ZEV sales increase, more people would be needed to assemble HD ZEVs and their components, including batteries. Additional, short-term, effects might be seen if pre-buy or low-buy were to occur. If pre-buy occurs, HD vehicle sales may increase temporarily, leading to temporary increases in employment in the related manufacturing sectors. If low-buy occurs, there may be temporary decreases in employment in the manufacturing sectors related to HD vehicles.

The cost effect reflects the potential impact on employment due to increased costs from adopting technologies needed for vehicles to meet the new emission standards. In the HD ICE vehicle manufacturing sector, if firms invest in lower emitting HD ICE vehicles, we would expect labor to be used to implement those technologies. We do not expect the rule to require compliance activities in the production of ZEVs, as these vehicles, by definition, emit zero emissions. In addition, though the proposed standards do not mandate the use of a specific technology, and EPA anticipates that a compliant fleet

[985] More information on UAW's comments can be found in the white paper ''Making EVs work for American workers'' found at *https://uaw.org/wp-content/uploads/2019/07/190416-EV-White-Paper-REVISED-January-2020-Final.pdf*.

[986] Herrmann, F., Beinhauer, W., Borrmann, D., Hertwig, M., Mack, J., Potinecke, T., Praeg, C., Rally, P. 2020. Effects of Electric Mobility and Digitlaisation on the Quality and Quantity of Employment at Volkswagen. Fraunhofer Institute for Industrial Engineering IAO. Study on behalf of the Sustainability Council of the Volkswagen Group. *https://www.volkswagenag.com/presence/stories/2020/12/frauenhofer-studie/6095_EMDI_VW_Summary_um.pdf*.

[987] See the report from Climate Nexus at *https://climatenexus.org/climate-issues/energy/ev-job-impacts/*.

[988] See Preamble Section I for information on the BIL and IRA provisions relevant to vehicle electrification, and the associated infrastructure.

[989] The CHIPS Act is the Creating Helpful Incentives to Produce Semiconductors and Science Act and was signed into lay on August 9, 2022. It is designed to strengthen supply chains, domestic manufacturing and national security. More information can be found at *https://www.whitehouse.gov/briefing-room/statements-releases/2022/08/09/fact-sheet-chips-and-science-act-will-lower-costs-create-jobs-strengthen-supply-chains-and-counter-china/*.

[990] More information on how these acts are expected to aid employment growth and create opportunities for growth along the supply chain can be found in the January, 2023 White House publication ''Building a Clean Energy Economy: A Guidebook to the Inflation Reduction Act's Investments in Clean Energy and Climate Action.'' found online at *https://www.whitehouse.gov/wp-content/uploads/2022/12/Inflation-Reduction-Act-Guidebook.pdf*.

[991] Political Economy Research Institute. (2022). *Job Creation Estimates Through Proposed Inflation Reduction Act*. University of Massachusetts Amherst. Retrieved from *https://www.bluegreenalliance.org/site/9-million-good-jobs-from-climate-action-the-inflation-reduction-act*.

[992] Barret, J. and Bivens, J. (2021). The stakes for workers in how policymakers manage the coming shift to all-electric vehicles. Economic Policy Institute. *https://www.epi.org/publication/ev-policy-workers*.

[993] Kupper, D., Kuhlmann, K., Tominaga, K., Arora, A., Schlageter, J.. (2020). Shifting Gears in Auto Manufacturing. *https://www.bcg.com/publications/2020/transformative-impact-of-electric-vehicles-on-auto-manufacturing*.

under the proposed standards would include a diverse range of technologies including ICE and ZEV technologies, in our assessment that supports the appropriateness and feasibility of the proposed standards, we developed a technology pathway that could be used to meet each of the standards, which project increased ZEV adoption rates. Therefore, we expect little cost effect on employment due to this rule.

We request comment on data and methods that could be used to estimate the potential effects of this action on employment in HD vehicle manufacturing sectors, and on how increasing electrification in the HD market in general, might impact employment in HD manufacturing sectors, both for ICE powertrains as well as electrified powertrains. We request comment on data and methods to estimate possible effects of the proposed emission standards on employment in the HD ICE and ZEVs manufacturing markets.

As the share of ZEVs in the HD market increases, there may also be effects on employment in the associated BEV charging and hydrogen refueling infrastructure industries. These impacts may occur in several ways, including through greater demand for charging and fueling infrastructure to support more ZEVs, leading to more private and public charging and fueling facilities being constructed, or through greater use of existing facilities, which can lead to increased maintenance needs for those facilities. We request comment on data and methods that could be used to estimate the effect of this action on the HD BEV vehicle charging infrastructure industry.

Because of the diversity of the HD vehicle market, we expect that entities from a wide range of transportation sectors would purchase vehicles subject to the proposed emission standards. HD vehicles are typically commercial in nature, and typically provide an ''intermediate good,'' meaning that such vehicles are used to provide a commercial service (transporting goods, municipal service vehicles, etc.), rather than serving as final consumer goods themselves (as most light-duty vehicles do). As a result, the purchase price of a new HD vehicle likely impacts the price of the service provided by that vehicle. If lifetime operational cost savings, or purchase incentives (as might be available for a new ZEV), are not accounted for in the prices for services provided by the new vehicles, this may result in higher prices for the services provided by these vehicles compared to the same services provided by a pre-regulation vehicle, and potentially reduce demand for the services such vehicles provide. In turn, there may be less employment in the sectors providing such services. On the other hand, if these cost savings are passed on to consumers through lower prices for services provided, it may lead to an increase in demand for those services, and therefore may lead to an increase in employment in those sectors providing those services. We expect that the actual effects on demand for the services provided by these vehicles and related employment would depend on cost pass-through, as well as responsiveness of demand to increases in transportation cost, should such increases occur.[994]

This action may also produce employment effects in other sectors, for example, in firms providing fuel. While reduced fuel consumption represents cost savings for purchasers of fuel, it could also represent a loss in value of output for the petroleum refining industry, which could result in reduced employment in that sector. Because the petroleum refining industry is material-intensive, and EPA estimates the reduction in fuel consumption will be mainly met by reductions in oil imports (see Section VI.F), the employment effect is not expected to be large.

This proposed action could also provide some positive impacts on driver employment in the heavy-duty trucking industry. As discussed in Section IV, the reduction in fuel costs from purchasing a ZEV instead of an ICE vehicle would be expected to not only reduce operational costs for ZEV owners and operators, compared to an ICE vehicle, but may also provide additional incentives to purchase a HD ZEV over a HD ICE vehicle. For example, in comments submitted as part of the recent HD 2027 proposal, the Zero Emission Transportation Association stated that driver satisfaction due to ''a smoother ride with minimal vibrations, less noise pollution, and a high-tech driving experience free from the fumes of diesel exhaust'' has the possibility of decreasing truck driver shortages and increasing driver retention.

F. Oil Imports and Electricity and Hydrogen Consumption

The proposed standards would reduce not only GHG emissions but also liquid fuel consumption (*i.e.,* oil consumption) while simultaneously increasing electricity and hydrogen consumption. Reducing liquid fuel consumption is a significant means of reducing GHG emissions from the transportation sector. As discussed in Section V and DRIA Chapter 4, we used an updated version of EPA's MOVES model to estimate the impact of the proposed standards on heavy-duty vehicle emissions, fuel consumption, and electricity consumption. In Chapter 6.5 of the DRIA, we present fossil fuel—diesel, gasoline, CNG—consumption impacts. Table 6–1 in Chapter 6 of the DRIA shows the estimated reduction in U.S. oil imports under the proposed standards relative to the reference case scenario. This proposal is projected to reduce U.S. oil imports 4.3 billion gallons through 2055. The oil import reductions are the result of reduced consumption (*i.e.,* reduced liquid fuel demand) of both diesel fuel and gasoline and our estimate that 86.4 percent of reduced liquid fuel demand results in reduced imports.[995] DRIA Table 6–1 also includes the projected increase in electricity and hydrogen consumption due to the proposed rule.

VII. Benefits of the Proposed Program

A. Social Cost of GHGs

EPA estimated the climate benefits for the proposed standards using measures of the social cost of three GHGs: Carbon, Methane, and Nitrous oxide. The social cost of each gas (*i.e.,* the social cost of carbon (SC-CO_2), methane (SC-CH_4), and nitrous oxide (SC-N_2O)) is the monetary value of the net harm to society associated with a marginal increase in emissions in a given year, or the benefit of avoiding such an increase. Collectively, these values are referenced as the ''social cost of greenhouse gases'' (SC-GHG). In principle, SC-GHG includes the value of all climate change impacts, including (but not limited to) changes in net agricultural productivity, human health effects, property damage from increased flood risk and natural disasters, disruption of energy systems, risk of conflict, environmental migration, and the value of ecosystem services. The SC-GHG, therefore, reflects the societal value of reducing emissions of the gas in question by one metric ton and is the theoretically appropriate value to use in conducting benefit-cost analyses of policies that affect GHG emissions. EPA and other Federal agencies began regularly incorporating SC-GHG estimates in their benefit-cost analyses conducted under Executive

[994] Cost pass-through refers to the amount of increase in up-front cost incurred by the HD vehicle owner that is then passed on to their customers in the form of higher prices for services provided by the HD vehicle owner.

[995] To estimate the 86.4 percent import reduction factor, we look at changes in U.S. crude oil imports/exports and net refined petroleum products in the AEO 2022 Reference Case, Table 11. Petroleum and Other Liquids Supply and Disposition, in comparison to the Low Economic Growth Case from the AEO 2022. See the spreadsheet, ''Low vs Reference case impact on Imports 2022 AEO.xlsx''.

Order (E.O.) 12866 [996] since 2008, following a Ninth Circuit Court of Appeals remand of a rule for failing to monetize the benefits of reducing CO_2 emissions in a rulemaking process.

We estimate the global social benefits of CO_2, CH_4, and N_2O emission reductions expected from the proposed rule using the SC-GHG estimates presented in the February 2021 Technical Support Document (TSD): Social Cost of Carbon, Methane, and Nitrous Oxide Interim Estimates under E.O. 13990 (IWG 2021). These SC-GHG estimates are interim values developed under E.O. 13990 for use in benefit-cost analyses until updated estimates of the impacts of climate change can be developed based on the best available climate science and economics. We have evaluated the SC-GHG estimates in the TSD and have determined that these estimates are appropriate for use in estimating the global social benefits of CO_2, CH4, and N2O emission reductions expected from this proposed rule. After considering the TSD, and the issues and studies discussed therein, EPA finds that these estimates, while likely an underestimate, are the best currently available SC-GHG estimates. These SC-GHG estimates were developed over many years using a transparent process, peer-reviewed methodologies, the best science available at the time of that process, and with input from the public. As discussed in Chapter 7 of the DRIA, these interim SC-GHG estimates have a number of limitations, including that the models used to produce them do not include all of the important physical, ecological, and economic impacts of climate change recognized in the climate-change literature and that several modeling input assumptions are outdated. As discussed in the February 2021 TSD, the Interagency Working Group on the Social Cost of Greenhouse Gases (IWG) finds that, taken together, the limitations suggest that these SC-GHG estimates likely underestimate the damages from GHG emissions. The IWG is currently working on a comprehensive update of the SC-GHG estimates (under E.O. 13990) taking into consideration recommendations from the National Academies of Sciences, Engineering and Medicine, recent scientific literature, public comments received on the February 2021 TSD and other input from experts and diverse stakeholder groups. The EPA is participating in the IWG's work. In addition, while that process continues, EPA is continuously reviewing developments in the scientific literature on the SC-GHG, including more robust methodologies for estimating damages from emissions, and looking for opportunities to further improve SC-GHG estimation going forward. Most recently, EPA has developed a draft updated SC-GHG methodology within a sensitivity analysis in the regulatory impact analysis of EPA's November 2022 supplemental proposal for oil and gas standards that is currently undergoing external peer review and a public comment process. See Chapter 7 of the DRIA for more discussion of this effort.

We monetize benefits of the proposed standards and evaluate other costs in part to better enable a comparison of costs and benefits pursuant to E.O. 12866, but we recognize that there are benefits that we are currently unable to fully quantify. EPA's consistent practice has been to set standards to achieve improved air quality consistent with CAA section 202 and not to rely on cost-benefit calculations, with their uncertainties and limitations, in identifying the appropriate standards. Nonetheless, our conclusion that the estimated benefits considerably exceed the estimated costs of the proposed program reinforces our view that the proposed standards represent an appropriate weighing of the statutory factors and other relevant considerations.

Table VII–1 presents the estimated annual, undiscounted climate benefits of reduced GHG emissions, and consequently the annual quantified benefits (*i.e.,* total GHG benefits), for each of the four interim social cost of GHG (SC-GHG) values estimated by the interagency working group for the stream of years beginning with the first year of rule implementation, 2027, through 2055 for the proposed program. Also shown are the present values (PV) and equivalent annualized values (EAV) associated with each of the four interim SC-GHG values. As discussed in the DRIA Chapter 7, there are some limitations to the SC-GHG analysis, including the incomplete way in which the integrated assessment models capture catastrophic and non-catastrophic impacts, their incomplete treatment of adaptation and technological change, uncertainty in the extrapolation of damages to high temperatures, and assumptions regarding risk aversion. Our analysis includes CO_2 emission increases from EGUs that would result from our proposal (see Section V) but we have not quantified upstream emissions impacts associated with liquid fuel refining.

TABLE VII–1—CLIMATE BENEFITS FROM REDUCTION IN GHG EMISSIONS ASSOCIATED WITH THE PROPOSAL

[Millions of 2021 Dollars]

Calendar Year	Proposal			
	5% Average	3% Average	2.5% Average	3% 95th Percentile
2027	$33	$110	$160	$320
2028	74	240	350	710
2029	120	400	580	1,200
2030	190	610	880	1,800
2031	290	900	1,300	2,700
2032	410	1,300	1,800	3,800
2033	530	1,600	2,300	4,900
2034	660	2,000	2,800	6,000
2035	780	2,300	3,300	7,100
2036	940	2,800	4,000	8,500
2037	1,100	3,300	4,700	9,900

[996] Benefit-cost analyses have been an integral part of executive branch rulemaking for decades. Presidents since the 1970s have issued executive orders requiring agencies to conduct analysis of the economic consequences of regulations as part of the rulemaking development process. E.O. 12866, released in 1993 and still in effect today, requires that for all regulatory actions that are significant under 3(f)(1), an agency provide an assessment of the potential costs and benefits of the regulatory action, and that this assessment include a quantification of benefits and costs to the extent feasible.''

TABLE VII–1—CLIMATE BENEFITS FROM REDUCTION IN GHG EMISSIONS ASSOCIATED WITH THE PROPOSAL—Continued

[Millions of 2021 Dollars]

Calendar Year	Proposal			
	5% Average	3% Average	2.5% Average	3% 95th Percentile
2038	1,300	3,800	5,400	12,000
2039	1,500	4,300	6,100	13,000
2040	1,700	4,900	6,900	15,000
2041	1,900	5,400	7,600	16,000
2042	2,100	5,900	8,300	18,000
2043	2,300	6,500	9,000	20,000
2044	2,500	7,000	9,800	21,000
2045	2,700	7,500	10,000	23,000
2046	2,900	8,000	11,000	24,000
2047	3,100	8,400	12,000	26,000
2048	3,300	8,800	12,000	27,000
2049	3,500	9,200	13,000	28,000
2050	3,700	9,700	13,000	30,000
2051	3,800	10,000	14,000	30,000
2052	4,000	10,000	14,000	31,000
2053	4,100	11,000	15,000	32,000
2054	4,300	11,000	15,000	32,000
2055	4,400	11,000	15,000	33,000
Present Value	22,000	87,000	130,000	260,000
Equivalent Annualized Value	1,400	4,600	6,500	14,000

Note: Climate benefits include changes in vehicle GHGs and EGU CO_2 emissions, but do not include changes in other EGU GHGs or refinery GHGs.

B. Criteria Pollutant Health Benefits

This section discusses the economic benefits from reductions in adverse health impacts resulting from non-GHG emission reductions that can be expected to occur as a result of the proposed CO_2 emission standards. GHG emissions are predominantly the byproduct of fossil fuel combustion processes that also produce criteria and hazardous air pollutant emissions. The heavy-duty vehicles that are subject to the proposed CO_2 emission standards are also significant sources of mobile source air pollution such as directly-emitted PM, NO_X, VOCs, CO, SO_2 and air toxics. We expect the proposed CO_2 emission standards would lead to an increase in HD ZEVs and a decrease in HD ICE vehicles, which would result in reductions of these non-GHG pollutants (see Section V). Zero-emission technologies would also affect emissions from upstream sources that occur during, for example, electricity generation and from the refining and distribution of liquid fuel (see Section V). This proposal's benefits analysis includes added emissions due to increased electricity generation but does not include emissions reductions from reduced petroleum refining.

Changes in ambient concentrations of ozone, $PM_{2.5}$, and air toxics that would result from the proposed CO_2 emission standards are expected to affect human health by reducing premature deaths and other serious human health effects, and they are also expected to result in other important improvements in public health and welfare (see Section VI). Children, especially, benefit from reduced exposures to criteria and toxic pollutants because they tend to be more sensitive to the effects of these respiratory pollutants. Ozone and particulate matter have been associated with increased incidence of asthma and other respiratory effects in children, and particulate matter has been associated with a decrease in lung maturation.

When feasible, EPA conducts full-scale photochemical air quality modeling to demonstrate how its national mobile source regulatory actions affect ambient concentrations of regional pollutants throughout the United States. The estimation of the human health impacts of a regulatory action requires national-scale photochemical air quality modeling to conduct a full-scale assessment of $PM_{2.5}$ and ozone-related health benefits. Air quality modeling and associated analyses are not available for this document.

For the analysis of the proposed CO_2 emission standards (and analysis of the alternative standards in Section IX), we instead use a reduced-form ''benefit-per-ton'' (BPT) approach to estimate the monetized $PM_{2.5}$-related health benefits of this proposal. The BPT approach estimates the monetized economic value of $PM_{2.5}$-related emission reductions (such as direct PM, (NO_X, and SO_2) due to implementation of the proposed program. Similar to the SC-GHG approach for monetizing reductions in GHGs, the BPT approach estimates monetized health benefits of avoiding one ton of $PM_{2.5}$-related emissions from a particular source sector. The value of health benefits from reductions (or increases) in $PM_{2.5}$ emissions associated with this proposal were estimated by multiplying $PM_{2.5}$-related BPT values by the corresponding annual reduction in tons of directly-emitted $PM_{2.5}$ and $PM_{2.5}$ precursor emissions (NO_X and SO_2). As explained in Chapter 7.2 in the DRIA, the $PM_{2.5}$ BPT values represent the monetized value of human health benefits, including reductions in both premature mortality and nonfatal illnesses.

The mobile sector BPT estimates used in this proposal were published in 2019, but were recently updated using the suite of premature mortality and morbidity studies in use by EPA for the 2023 p.m. NAAQS Reconsideration Proposal.[997] [998] The EGU BPT estimates used in this proposal were also recently updated.[999] The health benefits

[997] Wolfe, P.; Davidson, K.; Fulcher, C.; Fann, N.; Zawacki, M.; Baker, K.R. 2019. Monetized Health Benefits Attributable to Mobile Source Emission Reductions across the United States in 2025. Sci. Total Environ. 650, 2490–2498. Available at: *https://doi.org/10.1016/J.SCITOTENV.2018.09.273*.

[998] U.S. Environmental Protection Agency (U.S. EPA). 2023. PM NAAQS Reconsideration Proposal RIA. EPA–HQ–OAR–2019–0587. January.

[999] U.S. Environmental Protection Agency (U.S. EPA). 2023. Technical Support Document: Estimating the Benefit per Ton of Reducing

Technical Support Document (Benefits TSD) that accompanied the PM NAAQS Reconsideration Proposal details the approach used to estimate the $PM_{2.5}$-related benefits reflected in the mobile source BPTs.[1000] For more detailed information about the benefits analysis conducted for this proposal, including the BPT unit values used in this analysis, please refer to Chapter 7 of the DRIA.

A chief limitation to using $PM_{2.5}$-related BPT values is that they do not reflect benefits associated with reducing ambient concentrations of ozone. The $PM_{2.5}$-related BPT values also do not capture the benefits associated with reductions in direct exposure to NO_2 and mobile source air toxics, nor do they account for improved ecosystem effects or visibility. The estimated benefits of this proposal would be larger if we were able to monetize these unquantified benefits at this time.

Table VII–2 presents the annual, undiscounted $PM_{2.5}$-related health benefits estimated for the stream of years beginning with the first year of rule implementation, 2027, through calendar year 2055 for the proposed standards. Benefits are presented by **Source:** Onroad heavy-duty vehicles and EGUs. Because premature mortality typically constitutes the vast majority of monetized benefits in a $PM_{2.5}$ benefits assessment, we present benefits based on risk estimates reported from two different long-term exposure studies using different cohorts to account for uncertainty in the benefits associated with avoiding PM-related premature deaths.[1001] [1002] Although annual benefits presented in the table are not discounted for the purposes of present value or annualized value calculations, annual benefits do reflect the use of 3-percent and 7-percent discount rates to account for avoided health outcomes that are expected to accrue over more than a single year (the ''cessation lag'' between the change in PM exposures and the total realization of changes in health effects). Table VII–2 also displays the present and annualized values of estimated benefits that occur from 2027 to 2055, discounted using both 3-percent and 7-percent discount rates and reported in 2021 dollars. We estimate that the present value of benefits for the proposed program is $15 to $29 billion at a 3-percent discount rate and $5.8 to $11 billion at a 7-percent discount rate (2021 dollars).

TABLE VII–2—YEAR-OVER-YEAR MONETIZED $PM_{2.5}$-RELATED HEALTH BENEFITS OF THE PROPOSED PROGRAM

[Millions, 2021$]

	Onroad heavy-duty vehicles		EGUs		Total benefits	
	3% Discount rate	7% Discount rate	3% Discount rate	7% Discount rate	3% Discount rate	7% Discount rate
2027	$23–49	$21–44	$(17)–(35)	$(15)–(32)	$6.4–13	$5.7–12
2028	51–110	46–97	(37)–(76)	(33)–(69)	15–31	13–28
2029	87–180	78–160	(61)–(130)	(55)–(110)	26–53	23–48
2030	140–290	130–260	(120)–(260)	(110)–(230)	16–33	14–30
2031	220–460	200–410	(240)–(500)	(220)–(450)	(22)–(45)	(20)–(40)
2032	330–670	290–610	(400)–(820)	(360)–(730)	(70)–(140)	(64)–(130)
2033	440–900	400–810	(560)–(1100)	(500)–(1000)	(120)–(240)	(110)–(210)
2034	560–1,100	500–1,000	(720)–(1500)	(650)–(1300)	(160)–(330)	(150)–(300)
2035	690–1,400	620–1,200	(890)–(1800)	(800)–(1600)	(210)–(410)	(190)–(370)
2036	820–1,700	740–1,500	(930)–(1900)	(840)–(1700)	(110)–(220)	(100)–(200)
2037	970–1,900	870–1,700	(930)–(1900)	(840)–(1700)	31–62	27–57
2038	1,100–2,200	1,000–2,000	(890)–(1800)	(800)–(1600)	220–440	200–400
2039	1,300–2,500	1,100–2,200	(810)–(1600)	(730)–(1500)	440–880	400–790
2040	1,400–2,800	1,300–2,500	(700)–(1400)	(630)–(1200)	700–1,400	630–1,300
2041	1,500–3,000	1,400–2,700	(660)–(1300)	(590)–(1200)	870–1,700	780–1,500
2042	1,700–3,300	1,500–2,900	(610)–(1200)	(550)–(1100)	1,000–2,100	940–1,900
2043	1,800–3,500	1,600–3,100	(540)–(1100)	(490)–(970)	1,200–2,400	1,100–2,200
2044	1,900–3,700	1,700–3,300	(470)–(930)	(420)–(830)	1,400–2,800	1,300–2,500
2045	2,000–3,900	1,800–3,500	(380)–(760)	(340)–(680)	1,600–3,100	1,400–2,800
2046	2,100–4,100	1,900–3,700	(350)–(690)	(310)–(620)	1,700–3,400	1,600–3,100
2047	2,200–4,300	2,000–3,800	(310)–(620)	(280)–(550)	1,900–3,600	1,700–3,300
2048	2,300–4,400	2,000–4,000	(270)–(540)	(240)–(480)	2,000–3,900	1,800–3,500
2049	2,300–4,600	2,100–4,100	(230)–(450)	(200)–(410)	2,100–4,100	1,900–3,700
2050	2,400–4,700	2,200–4,300	(180)–(370)	(170)–(330)	2,300–4,400	2,000–3,900
2051	2,500–4,900	2,300–4,400	(190)–(370)	(170)–(330)	2,300–4,500	2,100–4,100
2052	2,600–5,100	2,400–4,600	(190)–(380)	(170)–(340)	2,400–4,700	2,200–4,200
2053	2,700–5,200	2,400–4,700	(190)–(380)	(170)–(340)	2,500–4,800	2,300–4,400
2054	2,800–5,400	2,500–4,800	(190)–(390)	(170)–(350)	2,600–5,000	2,300–4,500
2055	2,900–5,500	2,600–5,000	(200)–(390)	(180)–(350)	2,700–5,200	2,400–4,600
Present Value	23,000–46,000	10,000–20,000	(8,200)–(17,000)	(4,600)–(9,300)	15,000–29,000	5,800–11,000

Directly-Emitted $PM_{2.5}$, $PM_{2.5}$ Precursors and Ozone Precursors from 21 Sectors. January.

[1000] U.S. Environmental Protection Agency (U.S. EPA). 2023. Estimating $PM_{2.5}$- and Ozone-Attributable Health Benefits. Technical Support Document (TSD) for the PM NAAQS Reconsideration Proposal RIA. EPA–HQ–OAR–2019–0587. January.

[1001] Wu, X, Braun, D, Schwartz, J, Kioumourtzoglou, M and Dominici, F (2020). Evaluating the impact of long-term exposure to fine particulate matter on mortality among the elderly. Science advances 6(29): eaba5692.

[1002] Pope III, CA, Lefler, JS, Ezzati, M, Higbee, JD, Marshall, JD, Kim, S–Y, Bechle, M, Gilliat, KS, Vernon, SE and Robinson, AL (2019). Mortality risk and fine particulate air pollution in a large, representative cohort of US adults. Environmental health perspectives 127(7): 077007.

TABLE VII–2—YEAR-OVER-YEAR MONETIZED $PM_{2.5}$-RELATED HEALTH BENEFITS OF THE PROPOSED PROGRAM—Continued

[Millions, 2021$]

	Onroad heavy-duty vehicles		EGUs		Total benefits	
	3% Discount rate	7% Discount rate	3% Discount rate	7% Discount rate	3% Discount rate	7% Discount rate
Equivalent Annualized Value ...	1,200–2,400	840–1,700	(430)–(860)	(380)–(760)	780–1,500	470–910

Notes: The range of benefits in this table reflect the range of premature mortality estimates derived from the Medicare study (Wu et al., 2020) and the NHIS study (Pope et al., 2019). All benefits estimates are rounded to two significant figures. Annual benefit values presented here are not discounted. Negative values in parentheses are health disbenefits related to increases in estimated emissions. The present value of benefits is the total aggregated value of the series of discounted annual benefits that occur between 2027–2055 (in 2021 dollars) using either a 3% or 7% discount rate. The benefits associated with the standards presented here do not include health benefits associated with reduced criteria pollutant emissions from refineries. The benefits in this table also do not include the full complement of health and environmental benefits that, if quantified and monetized, would increase the total monetized benefits.

This analysis includes many data sources that are each subject to uncertainty, including projected emission inventories, air quality data from models, population data, population estimates, health effect estimates from epidemiology studies, economic data, and assumptions regarding the future state of the world (*i.e.,* regulations, technology, and human behavior). When compounded, even small uncertainties can greatly influence the size of the total quantified benefits. There are also inherent limitations associated with using the BPT approach. Despite these uncertainties, we believe the criteria pollutant benefits presented here are our best estimate of benefits absent air quality modeling and we have confidence in the BPT approach and the appropriateness of relying on BPT health estimates for this rulemaking. Please refer to DRIA Chapter 7 for more information on the uncertainty associated with the benefits presented here.

C. Energy Security

The proposed CO_2 emission standards are designed to require reductions in GHG emissions from HD vehicles in the 2027–2032 and beyond timeframe and, thereby, reduce liquid fuel consumption. We expect the standards will be met through a combination of zero-emission technologies and improvements in ICE vehicle technologies, which would, in turn, reduce the demand for liquid fuels and enable the United States to reduce petroleum imports. A reduction of U.S. petroleum imports reduces both financial and strategic risks caused by potential sudden disruptions in the supply of imported petroleum to the United States, thus increasing U.S. energy security.

Energy security is broadly defined as the uninterrupted availability of energy sources at affordable prices.[1003] Energy independence and energy security are distinct but related concepts. The goal of U.S. energy independence is the elimination of all U.S. imports of petroleum and other foreign sources of energy, but more broadly it is the elimination of U.S. sensitivity to the variations in the price and supply of foreign sources of energy.[1004] See Chapter 7 of the DRIA for a more detailed assessment of energy security and energy independence impacts of this proposed rule and Section II.D.2.ii for a discussion on battery critical materials and supply.

In order to understand the energy security implications of reducing U.S. oil imports, EPA has worked with Oak Ridge National Laboratory (ORNL), which has developed approaches for evaluating the social costs and energy security implications of oil use. When conducting this analysis, ORNL estimates the risk of reductions in U.S. economic output and disruption to the U.S. economy caused by sudden disruptions in world oil supply and associated price shocks (*i.e.,* labeled the avoided macroeconomic disruption/adjustment costs). These risks are quantified as ''macroeconomic oil security premiums,'' *i.e.,* the extra costs of oil use besides its market price.

For this proposed rule, EPA is using macroeconomic oil security premiums estimated using ORNL's methodology, which incorporates updated oil price projections and energy market and economic trends from the U.S. Department of Energy's Energy Information Administration's (EIA) Annual Energy Outlook (AEO) 2022. EPA and ORNL have worked together to revise the macroeconomic oil security premiums based upon recent energy security literature. We do not consider military cost impacts as a result of reductions in U.S. oil imports from this proposed rule due to methodological issues in quantifying these impacts.

To calculate the oil security benefits of this proposed rule, EPA is using the ORNL macroeconomic oil security premium methodology with: (1) Estimated oil savings calculated by EPA and (2) An oil import reduction factor of 86.4 percent, which shows how much U.S. oil imports are reduced from changes in U.S. oil consumption. In Table VII–3, EPA presents the macroeconomic oil security premiums and the energy security benefits for the proposed HDV standards for the years from 2027–2055.

[1003] International Energy Agency. ''Energy security: Ensuring the uninterrupted availability of energy sources at an affordable price''. Last updated December 2, 2019.

[1004] Greene, D. 2010. Measuring energy security: Can the United States achieve oil independence? Energy Policy 38, pp. 1614–1621.

TABLE VII–3—MACROECONOMIC OIL SECURITY PREMIUMS (2021$/BARREL) AND ENERGY SECURITY BENEFITS WITH THE PROPOSAL

[In millions of 2021$]

Calendar year	Macroeconomic oil security premiums (range)	Energy security benefits
2027	$3.57 ($0.79–$6.65)	$15
2028	$3.65 ($0.80–$6.79)	33
2029	$3.72 ($0.80–$6.92)	55
2030	$3.79 ($0.81–$7.06)	91
2031	$3.87 ($0.85–$7.22)	140
2032	$3.96 ($0.89–$7.38)	210
2033	$4.04 ($0.92–$7.53)	280
2034	$4.13 ($0.96–$7.69)	350
2035	$4.21 ($1.00–$7.85)	420
2036	$4.29 ($1.03–$7.98)	490
2037	$4.36 ($1.06–$8.11)	560
2038	$4.44 ($1.10–$8.24)	620
2039	$4.51 ($1.13–$8.37)	690
2040	$4.59 ($1.16–$8.50)	750
2041	$4.65 ($1.19–$8.62)	800
2042	$4.71 ($1.21–$8.73)	850
2043	$4.76 ($1.24–$8.85)	900
2044	$4.82 ($1.26–$8.96)	940
2045	$4.88 ($1.29–$9.08)	990
2046	$4.94 ($1.32–$9.18)	1,000
2047	$5.00 ($1.35–$9.28)	1,100
2048	$5.06 ($1.37–$9.37)	1,100
2049	$5.12 ($1.40–$9.46)	1,100
2050	$5.18 ($1.43–$9.56)	1,200
2051	$5.18 ($1.43–$9.56)	1,200
2052	$5.18 ($1.43–$9.56)	1,200
2053	$5.18 ($1.43–$9.56)	1,200
2054	$5.18 ($1.43–$9.56)	1,300
2055	$5.18 ($1.43–$9.56)	1,300
PV, 3%		12,000
PV, 7%		6,000
EAV, 3%		620
EAV, 7%		490

VIII. Comparison of Benefits and Costs

This section compares the estimated range of benefits associated with reductions of GHGs, monetized health benefits from reductions in $PM_{2.5}$, energy security benefits, fuel savings, and vehicle-related operating savings to total costs associated with the proposal and the alternative. Estimated costs are detailed and presented in Section IV of this preamble. Those costs include costs for both the new technology in our technology package and the operating costs associated with that new technology. Importantly, as detailed in Section IV of this preamble, the vehicle costs presented here exclude both the IRA battery tax credit and vehicle tax credit while the fuel savings exclude fuel taxes; as such, these costs, along with other operating costs, represent the social costs and/or savings associated with the proposed standards. Benefits from the reduction of GHG emissions and criteria pollutant emissions, and energy security benefits associated with reductions of imported oil, are presented in Section VII.

A. Methods

EPA presents three different benefit-cost comparisons for the proposal and the alternative:

1. A future-year snapshot comparison of annual benefits and costs in the year 2055, chosen to approximate the annual health benefits that would occur in a year when the program would be fully implemented and when most of the regulated fleet would have turned over. Benefits, costs, and net benefits are presented in year 2021 dollars and are not discounted. However, 3-percent and 7-percent discount rates were applied to account for avoided health outcomes that are expected to accrue over more than a single year (the ''cessation lag'' between the change in PM exposures and the total realization of changes in health effects).

2. The present value (PV) of the stream of benefits, costs, and net benefits calculated for the years 2027 through 2055, discounted back to the first year of implementation of the proposed rule (2027) using both 3-percent and 7-percent discount rates, and presented in year 2021 dollars. Note that year-over-year costs are presented in Section IV and year-over-year benefits may be found in Section VII.

3. The equivalent annualized value (EAV) of benefits, costs, and net benefits representing a flow of constant annual values that, had they occurred in each year from 2027 through 2055, would yield an equivalent present value to those estimated in method 2 (using either a 3-percent or 7-percent discount rate). Each EAV represents a typical benefit, cost, or net benefit for each year of the analysis and is presented in year 2021 dollars.

B. Results

Table VIII–1 shows the undiscounted annual monetized vehicle-related technology package RPE costs of the proposal and alternative in calendar year 2055. The table also shows the PV and EAV of those costs for the calendar years 2027 through 2055 using both 3-percent and 7-percent discount rates. The table includes an estimate of the vehicle technology package RPE costs and the costs associated with EVSE.

Note that all costs, savings, and benefits estimates presented in the tables that follow are rounded to two significant figures; numbers may not sum due to independent rounding.

TABLE VIII–1—VEHICLE-RELATED TECHNOLOGY COSTS ASSOCIATED WITH THE PROPOSAL AND ALTERNATIVE

[Millions of 2021 dollars]

	Proposal			Alternative		
	Vehicle technology package RPE	EVSE RPE	Sum	Vehicle technology package RPE	EVSE RPE	Sum
2055	−$1,500	$2,900	$1,400	−$1,200	$2,100	$880
PV, 3%	9,000	47,000	56,000	4,000	33,000	37,000
PV, 7%	10,000	29,000	39,000	5,400	20,000	25,000
EAV, 3%	470	2,500	2,900	210	1,700	1,900
EAV, 7%	820	2,300	3,200	440	1,600	2,100

Table VIII–2 shows the undiscounted annual monetized vehicle-related operating savings of the proposal and alternative in calendar year 2055. The table also shows the PV and EAV of those savings for calendar years 2027 through 2055 using both 3-percent and 7-percent discount rates. The savings in diesel exhaust fluid (DEF) consumption arise from the electrification of the HD fleet and the corresponding decrease in diesel engine equipped vehicles which require DEF to maintain compliance with NO_X emission standards. The maintenance and repair savings are substantial due again to electrification of the HD fleet, with HD BEVs and FCEVs projected to require 71 percent and 75 percent, respectively, of the maintenance and repair costs required of HD vehicles equipped with internal combustion engines.

TABLE VIII–2—VEHICLE-RELATED OPERATING SAVINGS ASSOCIATED WITH THE PROPOSAL AND ALTERNATIVE

[Millions of 2021 dollars *]

	Proposal				Alternative			
	Pre-tax fuel savings	DEF savings	Maintenance & repair savings	Sum of savings	Pre-tax fuel savings	DEF savings	Maintenance & repair savings	Sum of savings
2055	$4,300	$2,300	$24,000	$31,000	$2,800	$1,700	$17,000	$22,000
PV, 3%	28,000	22,000	200,000	250,000	18,000	15,000	140,000	180,000
PV, 7%	14,000	11,000	99,000	120,000	8,900	7,900	71,000	87,000
EAV, 3%	1,400	1,100	10,000	13,000	920	810	7,400	9,100
EAV, 7%	1,100	900	8,100	10,000	720	640	5,800	7,100

* Fuel savings are net of savings in diesel, gasoline, and CNG consumption with increased electricity and hydrogen consumption; DEF savings accrue only to diesel vehicles; maintenance and repair savings include impacts associated with all fuels.

Table VIII–3 shows the undiscounted annual monetized energy security benefits of the proposal and alternative in calendar year 2055. The table also shows the PV and EAV of those benefits for calendar years 2027 through 2055 using both 3-percent and 7-percent discount rates.

TABLE VIII–3—ENERGY SECURITY BENEFITS ASSOCIATED WITH THE PROPOSAL AND ALTERNATIVE

[Millions of 2021 dollars]

	Proposal	Alternative
2055	$1,300	$910
PV, 3%	12,000	8,500
PV, 7%	6,000	4,300
EAV, 3%	620	440
EAV, 7%	490	350

Table VIII–4 shows the benefits of reduced GHG emissions, and consequently the annual quantified benefits (*i.e.,* total GHG benefits), for each of the four interim social cost of GHG (SC–GHG) values estimated by the Interagency Working Group (IWG). As discussed in DRIA Chapter 7, there are some limitations to the SC–GHG analysis, including the incomplete way in which the integrated assessment models capture catastrophic and non-catastrophic impacts, their incomplete treatment of adaptation and technological change, uncertainty in the extrapolation of damages to high temperatures, and assumptions regarding risk aversion. These climate benefits include benefits associated with reduced vehicle GHGs and increased EGU CO_2 emissions, but do not include any impacts associated with petroleum extraction, petroleum transportation, or liquid fuel refining.

Table VIII–5 shows the undiscounted annual monetized $PM_{2.5}$-related health benefits of the proposal and alternative in calendar year 2055. The table also shows the PV and EAV of those benefits for calendar years 2027 through 2055 using both 3-percent and 7-percent discount rates. The range of benefits in this table reflect the two premature mortality estimates derived from the Medicare study (Wu et al., 2020) and the NHIS study (Pope et al., 2019).[1005] [1006]

[1005] Wu, X, Braun, D, Schwartz, J, Kioumourtzoglou, M and Dominici, F (2020). Evaluating the impact of long-term exposure to fine particulate matter on mortality among the elderly. Science advances 6(29): eaba5692.

[1006] Pope III, CA, Lefler, JS, Ezzati, M, Higbee, JD, Marshall, JD, Kim, S–Y, Bechle, M, Gilliat, KS, Vernon, SE and Robinson, AL (2019). Mortality risk and fine particulate air pollution in a large, representative cohort of U.S. adults. Environmental health perspectives 127(7): 077007.

TABLE VIII–4—CLIMATE BENEFITS FROM REDUCTION IN GHG EMISSIONS ASSOCIATED WITH THE PROPOSAL AND ALTERNATIVE

[Millions of 2021 dollars]

	Proposal				Alternative			
	5% Average	3% Average	2.5% Average	3% 95th Percentile	5% Average	3% Average	2.5% Average	3% 95th Percentile
2055	$4,400	$11,000	$15,000	$33,000	$3,200	$8,000	$11,000	$24,000
PV	22,000	87,000	130,000	260,000	16,000	62,000	96,000	190,000
EAV	1,400	4,600	6,500	14,000	1,000	3,300	4,700	9,900

Notes: Climate benefits are based on changes (reductions) in CO_2, CH_4, and N_2O emissions and are calculated using four different estimates of the social cost of carbon (SC-CO_2), the social cost of methane (SC-CH_4), and the social cost of nitrous oxide (SC-N_2O) (model average at 2.5-percent, 3-percent, and 5-percent discount rates; 95th percentile at 3-percent discount rate). The 95th perncentile estimate was included to provide information on potentially higher-than-expected economic impacts from climate change, conditional on the 3 percent estimate of the discount rate. We emphasize the importance and value of considering the benefits calculated using all four SC-CO_2, SC-CH_4, and SC-N_2O estimates. As discussed in the Technical Support Document: Social Cost of Carbon, Methane, and Nitrous Oxide Interim Estimates under Executive Order 13990 (IWG 2021), a consideration of climate benefits calculated using discount rates below 3 percent, including 2 percent and lower, are also warranted when discounting intergenerational impacts.

The same discount rate used to discount the value of damages from future emissions (SC-GHGs at 5, 3, 2.5 percent) is used to calculate the present value of SC-GHGs for internal consistency. Annual benefits shown are undiscounted values.

TABLE VIII–5—$PM_{2.5}$-RELATED EMISSION REDUCTION BENEFITS ASSOCIATED WITH THE PROPOSAL AND ALTERNATIVE

[Millions of 2021 dollars]

	Proposal		Alternative	
	3%	7%	3%	7%
2055	$2,700–$5,200	$2,400–$4,600	$1,900–$3,700	$1,700–$3,300
PV	15,000–29,000	5,800–11,000	11,000–21,000	4,200–8,200
EAV	780–1,500	470–910	570–1,100	340–670

Notes: The range of benefits in this table reflects the range of premature mortality estimates derived from the Medicare study (Wu et al., 2020) and the NHIS study (Pope III et al., 2019). All benefits estimates are rounded to two significant figures. The present value of benefits is the total aggregated value of the series of discounted annual benefits that occur between 2027–2055 (in 2021 dollars) using either a 3-percent or 7-percent discount rate. The benefits associated with the standards presented here do not include health benefits associated with reduced criteria pollutant emissions from refineries. The benefits in this table also do not include the full complement of health and environmental benefits that, if quantified and monetized, would increase the total monetized benefits.

Table VIII–6 shows the undiscounted annual net benefits of the proposal and alternative in calendar year 2055 using each of the four social cost of GHG valuations. The table also shows the PV and EAV of the net benefits for calendar years 2027 through 2055 using both 3-percent and 7-percent discount rates. For presentational simplicity, we use the mid-point of the range of $PM_{2.5}$ benefits in the annual 2055 net benefit calculation. For the calculation of PV and EAV net benefits, we use the high-end estimate of $PM_{2.5}$ benefits assuming a 3-percent discount rate and the low-end estimate of benefits assuming a 7-percent discount rate in the corresponding 3- and 7-percent PV and EAV estimates. These choices do not fundamentally alter the net benefit calculations since differences between the chosen $PM_{2.5}$ benefit estimates are not reflected when net benefits are rounded to two significant figures. These net benefits include benefits associated with reduced vehicle GHGs and increased EGU CO_2 emissions, but do not include any impacts associated with petroleum extraction, petroleum transportation or liquid fuel refining.

TABLE VIII–6—NET BENEFITS ASSOCIATED WITH THE PROPOSAL AND ALTERNATIVE

[Millions of 2021 dollars]

	Proposal Average				Alternative			
	5% Average	3% Average	2.5% Average	3% 95th Percentile	5% Average	3% Average	2.5% Average	3% 95th percentile
2055	$39,000	$46,000	$50,000	$68,000	$28,000	$33,000	$36,000	$49,000
PV, 3%	260,000	320,000	370,000	500,000	180,000	230,000	260,000	360,000
PV, 7%	120,000	180,000	230,000	360,000	86,000	130,000	170,000	260,000
EAV, 3%	14,000	17,000	19,000	26,000	9,800	12,000	13,000	19,000
EAV, 7%	9,300	12,000	14,000	22,000	6,800	9,000	10,000	16,000

Notes: Climate benefits are based on changes (reductions) in CO_2, CH_4, and N_2O emissions and are calculated using four different estimates of the social cost of carbon (SC-CO_2), the social cost of methane (SC-CH_4), and the social cost of nitrous oxide (SC-N_2O) (model average at 2.5-percent, 3-percent, and 5-percent discount rates; 95th percentile at 3-percent discount rate). The 95th perncentile estimate was included to provide information on potentially higher-than-expected economic impacts from climate change, conditional on the 3 percent estimate of the discount rate. We emphasize the importance and value of considering the benefits calculated using all four SC-CO_2, SC-CH_4, and SC-N_2O estimates. As discussed in the Technical Support Document: Social Cost of Carbon, Methane, and Nitrous Oxide Interim Estimates under Executive Order 13990 (IWG 2021), a consideration of climate benefits calculated using discount rates below 3 percent, including 2 percent and lower, are also warranted when discounting intergenerational impacts. The same discount rate used to discount the value of damages from future emissions (SC-GHG at 5, 3, 2.5 percent) is used to calculate present value of SC-GHGs for internal consistency, while all other costs and benefits are discounted at either 3 percent or 7 percent. Annual costs and benefits in 2055 are undiscounted values. Note that the benefits attributable to reductions in non-GHG pollutants associated with the standards included here do not include the full complement of health and environmental effects that, if quantified and monetized, would increase the total monetized benefits. Instead, the non-GHG pollutant benefits are based on benefit-per-ton values that reflect only human health impacts associated with reductions in $PM_{2.5}$ exposure. For the purposes of presentational clarity in the calculation of net benefits, $PM_{2.5}$-related benefits are averaged across the range of alternative estimates for 2055. For PV and EAV estimated with a 3% discount rate, we calculate net benefits using $PM_{2.5}$-related benefits based on the Pope III et al., 2019 study of premature mortality. For PV and EAV estimated with a 7% discount rate, net benefits reflect $PM_{2.5}$-related benefits based on the Wu et al., 2020 study.

We summarize the vehicle costs, operational savings, and benefits of the proposal, as shown in Table VIII–7. Table VIII–7 presents the proposal's costs from Table VIII–1, operating savings from Table VIII–2, benefits from Table VIII–3 through Table VIII–5, and net benefits from Table VIII–6 in a single table.

TABLE VIII–7—SUMMARY OF VEHICLE COSTS, OPERATING SAVINGS, AND BENEFITS OF THE PROPOSAL

[Billions of 2021 dollars]

	CY 2055	PV, 3%	PV, 7%	EAV, 3%	EAV, 7%
Vehicle Technology Package RPE	−$1.5	$9	$10	$0.47	$0.82
EVSE RPE	2.9	47	29	2.5	2.3
Sum of Vehicle Costs	1.40	56	39	2.9	3.2
Pre-tax Fuel Savings	4	28	14	1.4	1.1
Diesel Exhaust Fluid Savings	2.3	22	11	1.1	0.9
Repair & Maintenance Savings	24	200	99	10	8
Sum of Operating Savings	31	250	120	13	10
Energy Security Benefits	1.3	12	6.0	0.62	0.49
Climate Benefits: [a]					
5% Average	4.4	22	22	1.4	1.4
3% Average	11	87	87	4.6	4.6
2.5% Average	15	130	130	6.5	6.5
3% 95th Percentile	33	260	260	14	14
Criteria Air Pollutant Benefits: [b]					
$PM_{2.5}$ Health Benefits—Wu et al., 2020	2.4–2.7	15	5.8	0.78	0.47
$PM_{2.5}$ Health Benefits—Pope III et al., 2019	4.6–5.2	29	11.0	1.5	0.91
Net Benefits: [a c]					
With Climate 5% Average	39	260	120	14	9.3
With Climate 3% Average	46	320	180	17	12
With Climate 2.5% Average	50	370	230	19	14
With Climate 3% 95th Percentile	68	500	360	26	22

[a] The same discount rate used to discount the value of damages from future emissions (SC-GHG at 5, 3, 2.5 percent) is used to calculate present and equivalent annualized values of SC-GHGs for internal consistency, while all other costs and benefits are discounted at either 3% or 7%.

[b] $PM_{2.5}$-related health benefits are presented based on two different long-term exposure studies of mortality risk: a Medicare study (Wu et al., 2020) and a National Health Interview Survey study (Pope III et al., 2019). The benefits associated with the standards presented here do not include health benefits associated with reduced criteria pollutant emissions from refineries. The benefits in this table also do not include the full complement of health and environmental benefits that, if quantified and monetized, would increase the total monetized benefits. The range of benefits in CY2055 are estimated using either a 3% or 7% discount rate to account for avoided health outcomes that are expected to accrue over more than a single year.

[c] For criteria pollutant benefits included in the calculation of net benefits, $PM_{2.5}$-related benefits are averaged across the range of estimates in CY2055. For presentational clarity, the present and equivalent annualized value of net benefits for a 3% discount rate reflect benefits based on the Pope III et al. study while the present and equivalent annualized value of net benefits for a 7% discount rate reflect benefits based on the Wu et al. study.

We have also estimated the total transfers associated with the proposed CO_2 emission standards, as shown in Table VIII–8. The transfers consist of the IRA battery tax credit and vehicle tax credit and fuel taxes. None of these are included in the prior tables (*i.e.,* Table VIII–1, Table VIII–2, and Table VIII–6) in this section's comparison of benefits and costs.

TABLE VIII–8—TRANSFERS ASSOCIATED WITH THE PROPOSAL AND THE ALTERNATIVE

[Millions of 2021 dollars]

	Proposal				Alternative			
	Battery tax credits	Vehicle tax credits	Fuel taxes	Sum	Battery tax credits	Vehicle tax credits	Fuel taxes	Sum
2055	$0	$0	$6,600	$6,600	$0	$0	$4,700	$4,700
PV, 3%	3,300	5,900	69,000	79,000	2,300	3,900	50,000	56,000
PV, 7%	2,900	5,000	37,000	44,000	2,000	3,400	26,000	31,000
EAV, 3%	170	310	3,600	4,100	120	210	2,600	2,900
EAV, 7%	240	410	3,000	3,600	160	270	2,100	2,600

IX. Analysis of Alternative CO_2 Emission Standards

As discussed throughout this preamble, in developing this proposal, EPA considered and is requesting comment on a regulatory alternative that would establish less stringent CO_2 emission standards and, thus, would result in fewer GHG emission reductions than the CO_2 emission standards we are proposing. This section presents estimates of technology costs, CO_2 emission reductions, fuel savings, and other impacts associated with the alternative. We request comment on this analysis for the alternative set of CO_2 standards. See Section II.H for our request for comment regarding the alternative set of standards than those proposed.

We also are seeking comment on a more stringent set of emission standards that would be based on higher ZEV adoption rates on a national level around the same levels as the adoption rates included in the California ACT rule, as described in Section II.H.

A. Comparison of Proposal and Alternative

The alternative represents a slower phase-in option for program implementation, which represents differences in timing, costs, and benefits of a HD vehicle CO_2 emissions program. Specifically, the alternative has both a less aggressive phase-in of CO_2 emissions standards from MYs 2027 through 2031 and a less stringent standard for MYs 2032 and beyond. The alternative was modeled using the same methodologies used to model the proposal, as described in Chapters 3 and 4 of the DRIA.

1. Slower Phase-In Alternative

EPA developed and considered an alternative with a more gradual phase-in of CO_2 emission standards for MYs 2027 through MY 2031 and a less stringent final standard in MY 2032, as discussed in Section II.H. The ZEV adoption rates associated with level of stringency for MYs 2027 through 2032 under the slower phase-in alternative are shown in Table IX–1. The slower phase-in alternative ZEV adoption rates by regulatory subcategory and by MY are shown in DRIA Chapter 2.9.5. The slower phase-in alternative standards, presented in Table IX–2 through Table IX–5, are calculated using the same method as the proposed standards, as described in Preamble Sections II.F.2 and II.F.3, using the alternative ZEV adoption rates by regulatory subcategory.

TABLE IX–1—ZEV TECHNOLOGY ADOPTION RATES IN THE TECHNOLOGY PACKAGES CONSIDERED FOR THE ALTERNATIVE

	MY 2027 (%)	MY 2028 (%)	MY 2029 (%)	MY 2030 (%)	MY 2031 (%)	MY 2032 and later (%)
Vocational	14	20	25	30	35	40
Short-Haul Tractors	5	8	10	15	20	25
Long-Haul Tractors	0	0	0	10	15	20

TABLE IX–2—ALTERNATIVE MY 2027 THROUGH 2032+ VOCATIONAL VEHICLE CO_2 EMISSION STANDARDS

[Grams/ton-mile]

Model year	Subcategory	CI light heavy	CI medium heavy	CI heavy heavy	SI light heavy	SI medium heavy
2027	Urban	318	227	244	364	266
	Multi-Purpose	281	204	205	323	237
	Regional	242	187	164	270	216
2028	Urban	294	218	239	340	257
	Multi-Purpose	257	195	200	299	228
	Regional	218	178	159	246	207
2029	Urban	275	211	235	321	250
	Multi-Purpose	238	188	196	280	221
	Regional	199	171	155	227	200
2030	Urban	255	206	212	301	245
	Multi-Purpose	218	183	173	260	216
	Regional	179	166	132	207	195
2031	Urban	235	199	205	281	238
	Multi-Purpose	198	176	166	240	209
	Regional	159	159	125	187	188
2032 and later	Urban	215	192	195	261	231
	Multi-Purpose	178	169	156	220	202
	Regional	139	152	115	167	181

TABLE IX–3—ALTERNATIVE MY 2027 THROUGH 2032+ OPTIONAL CUSTOM CHASSIS VOCATIONAL VEHICLE CO_2 EMISSION STANDARDS

[Grams/ton-mile]

Optional custom chassis vehicle category	MY 2027	MY 2028	MY 2029	MY 2030	MY 2031	MY 2032 and later
School Bus	214	203	195	190	182	173
Other Bus	286	269	252	237	223	206
Coach Bus	205	205	205	185	174	164
Refuse Hauler	265	253	241	232	221	212
Concrete Mixer	275	265	256	246	237	228
Motor home	226	226	226	226	226	226
Mixed-use vehicle	316	316	316	316	316	316
Emergency vehicle	319	319	319	319	319	319

TABLE IX–4—ALTERNATIVE MY 2027 THROUGH MY 2032+ TRACTOR CO_2 EMISSION STANDARDS

[Grams/ton-mile]

Model year	Roof height	Class 7 all cab styles	Class 8 day cab	Class 8 sleeper cab
	Low Roof	91.4	69.7	64.1
	Mid Roof	98.2	74.1	69.6
	High Roof	95.0	71.9	64.3
2028	Low Roof	88.5	67.5	64.1
	Mid Roof	95.1	71.8	69.6
	High Roof	92.0	69.6	64.3
2029	Low Roof	86.6	66.1	64.1
	Mid Roof	93.1	70.2	69.6
	High Roof	90.0	68.1	64.3
2030	Low Roof	81.8	62.4	57.7
	Mid Roof	87.9	66.3	62.6
	High Roof	85.0	64.3	57.9
2031	Low Roof	77.0	58.7	54.5
	Mid Roof	82.7	62.4	59.2
	High Roof	80.0	60.6	54.7
2032 and Later	Low Roof	72.2	55.1	51.3
	Mid Roof	77.6	58.5	55.7
	High Roof	75.0	56.8	51.4

TABLE IX–5—ALTERNATIVE MY 2027 THROUGH MY 2032+ HEAVY-HAUL TRACTOR CO_2 EMISSION STANDARDS

[Grams/ton-mile]

Model Year	CO_2 Emission standards (grams/ton-mile)
2027	48.3
2028	48.3
2029	48.3
2030	44.0
2031	43.0
2032 and Later	42.5

Based on our current analysis for each of the vocational vehicle and tractor subcategories, there appear to be technically feasible emission standards available that provide for greater CO_2 emission reductions through the proposed standards than through the slower phase-in alternative. As explained in section II.H, the proposed standards are therefore appropriate. Consequently, at this time, EPA does not believe that the slower phase-in alternative would be appropriate.

2. Proposed CO_2 Emission Standards

Details regarding MOVES modeling of these proposed standards are included in Section IV of this preamble and Chapter 4 of the DRIA. The ZEV adoption rates in the technology packages associated with the proposed level of stringency for MYs 2027 through 2032 under the proposal are shown in Table IX–6.

TABLE IX–6—ZEV TECHNOLOGY ADOPTION RATES IN THE TECHNOLOGY PACKAGES CONSIDERED FOR THE PROPOSED STANDARDS

	MY 2027 (%)	MY 2028 (%)	MY 2029 (%)	MY 2030 (%)	MY 2031 (%)	MY 2032 and later
Vocational	20	25	30	35	40	50
Short-Haul Tractors	10	12	15	20	30	35
Long-Haul Tractors	0	0	0	10	20	25

The bases for each of the proposed CO_2 emission standards by model year and industry segment are discussed more fully earlier in this preamble Section II and in Chapter 2 of the DRIA. Section II of this preamble include explanation of how EPA arrived at the proposed CO_2 emission standards, including discussion of the technologies upon which the CO_2 emission standards are based and why the standards are reasonable in light of these technologies, based on all of the information available to us at the time of this proposal.

B. Emission Inventory Comparison of Proposal and Slower Phase-In Alternative

Both the proposal and alternative were modeled in MOVES3.R3 by increasing ZEV adoption in HD vehicles, which means we model the alternative as displacing fewer HD ICE vehicles than the proposal. In general, this means the alternative has both lower downstream emission reductions and lower upstream EGU emission increases when compared to the proposal. Chapter 4.7 of the DRIA contains more discussion on the emission impacts of the alternative.

1. Downstream Emission Comparison

Our estimates of the downstream emission reductions of GHGs that would result from the alternative, relative to the reference case, are presented in Table IX–7 for calendar years 2035, 2045, and 2055. Total GHG emissions, or CO_2 equivalent (CO_2e), are calculated by summing all GHG emissions multiplied by their 100-year Global Warming Potential (GWP).

TABLE IX–7—ANNUAL DOWNSTREAM HEAVY-DUTY GHG EMISSION REDUCTIONS FROM THE ALTERNATIVE IN CALENDAR YEARS (CY) 2035, 2045, AND 2055

Pollutant	100-year GWP	CY 2035 reductions		CY 2045 reductions		CY 2055 reductions	
		Million metric tons	Percent (%)	Million metric tons	Percent (%)	Million metric tons	Percent (%)
Carbon Dioxide (CO_2)	1	36	9	73	19	90	22
Methane (CH_4)	25	0.003	5	0.011	17	0.022	22
Nitrous Oxide (N_2O)	298	0.005	9	0.009	17	0.011	20
CO_2 Equivalent (CO_2e)		38	9	76	19	94	22

Our estimated GHG emission reductions for the alternative are lower than for the proposal (see Section V of the preamble). In 2055, we estimate that the alternative would reduce emissions of CO_2 by 22 percent (the proposal's estimate is 30 percent), methane by 22 percent (the proposal's estimate is 31 percent), and N_2O by 20 percent (the proposal's estimate is 28 percent). The resulting total GHG reduction, in CO_2e, is 22 percent for the alternative versus 30 percent for the proposal.

The warming impacts of GHGs are cumulative. Table IX–8 presents the cumulative GHG reductions that would result from the proposed standards and the alternative in 2055, in billion metric tons (BMT).

TABLE IX–8—CUMULATIVE 2027–2055 DOWNSTREAM HEAVY-DUTY GHG EMISSION REDUCTIONS FROM THE PROPOSED STANDARDS AND THE ALTERNATIVE

Pollutant	Proposal GHG reductions		Alternative GHG reductions	
	BMT	Percent (%)	BMT	Percent (%)
Carbon Dioxide (CO_2)	2.2	18	1.6	13
Methane (CH_4)	0.00035	17	0.00025	12
Nitrous Oxide (N_2O)	0.00028	17	0.0002	12
CO_2 Equivalent (CO_2e)	2.3	18	1.6	13

Consistent with Table IX–7, the cumulative GHG emission reductions are smaller for the alternative than the proposal.

We anticipate an increase in the use of zero-emission technologies to meet the CO_2 emission standards for both the proposal and the alternative. Therefore, we also expect downstream emission reductions for criteria pollutants and air toxics would result from the alternative, as presented in Table IX–9.

TABLE IX–9—ANNUAL DOWNSTREAM HD CRITERIA POLLUTANT AND AIR TOXIC EMISSION REDUCTIONS FROM THE ALTERNATIVE IN CALENDAR YEARS (CYS) 2035, 2045, AND 2055

Pollutant	CY 2035 reductions		CY 2045 reductions		CY 2055 reductions	
	U.S. tons	Percent (%)	U.S. tons	Percent (%)	U.S. tons	Percent (%)
Nitrogen Oxides (NO_X)	11,471	3	40,460	15	51,027	20
Primary Exhaust $PM_{2.5}$	199	5	501	22	701	28
Volatile Organic Compounds (VOC)	4,438	8	10,366	21	15,139	27
Sulfur Dioxide (SO_2)	147	10	298	19	373	23
Carbon Monoxide (CO)	70,292	8	176,283	20	252,482	25
1,3-Butadiene	14	17	35	34	50	38
Acetaldehyde	91	8	216	22	326	26
Benzene	82	13	208	30	302	36
Formaldehyde	61	6	157	20	258	24
Naphthalene [a]	5	7	11	28	16	33
Ethylbenzene	52	9	128	22	195	30

[a] Naphthalene includes both gas and particle phase emissions.

Once again, the emission reductions in criteria pollutants and air toxics that would result from the alternative are smaller than those that would result from the proposal. For example, in 2055, we estimate the alternative would reduce NO_X emissions by 20 percent, $PM_{2.5}$ emissions by 28 percent, and VOC emissions by 27 percent. This is compared to the proposal's reductions of NO_X by 28 percent, $PM_{2.5}$ by 39 percent, and VOC by 37 percent for the proposal. Reductions in emissions for air toxics from the alternative range from 24 percent for formaldehyde (the proposal's estimate is 33 percent) to 38 percent for 1,3-butadiene (the proposal's estimate is 51 percent).

2. Upstream Emission Comparison

Our estimates of the additional CO_2 emissions from EGUs due to the proposed standards, relative to the reference case, are presented in Table IX–10 for calendar years 2035, 2045, and 2055.

TABLE IX–10—ANNUAL UPSTREAM EGU CO_2 EMISSION INCREASES FROM THE ALTERNATIVE IN CALENDAR YEARS (CYS) 2035, 2045, AND 2055

Pollutant	Additional EGU emissions (million metric tons)		
	CY 2035	CY 2045	CY 2055
Carbon Dioxide (CO_2)	15	12	8

In 2055, we estimate the alternative would increase EGU emissions of CO_2 by 8 million metric tons, compared to 11 million metric tons from the proposal. The EGU impacts decrease over time because of projected changes in the power generation mix.

In Table IX–11, we present the cumulative CO_2 increases from EGUs that we expect would result from the proposal and alternative, measured in billion metric tons (BMT).

TABLE IX–11—CUMULATIVE 2027–2055 EGU CO_2 EMISSION INCREASES REFLECTING THE PROPOSED AND ALTERNATIVE GHG STANDARDS

Pollutant	EGU CO_2 emissions increase (BMT)	
	Proposal	Alternative
Carbon Dioxide (CO_2)	0.4	0.3

We estimate the alternative would result in 0.3 billion metric tons of increased CO_2 emissions from EGUs, compared to 0.4 billion metric tons from the proposal.

Table IX–12 contains our estimates of EGU emission increases from the alternative for some criteria pollutants. In general, we expect the EGU emissions increases from the alternative to be 20 to 30 percent smaller than for the proposal.

TABLE IX–12—ANNUAL CRITERIA POLLUTANT EMISSION INCREASES FROM EGUS FROM THE ALTERNATIVE IN CALENDAR YEARS (CYS) 2035, 2045, AND 2055

Pollutant	Additional EGU emissions (U.S. tons)		
	CY 2035	CY 2045	CY 2055
Nitrogen Oxides (NO_X)	2,054	1,625	575
Primary $PM_{2.5}$	885	761	549
Volatile Organic Compounds (VOC)	458	563	551
Sulfur Dioxide (SO_2)	7,235	1,863	666

In addition to downstream and EGU emissions impacts, we also estimated impacts on select criteria pollutant emissions from refineries for calendar year 2055. This analysis assumes that the reduction in demand for liquid fuels would lead to reduced activity and emissions at refineries. The results are presented in Table IX–13. Additional detail on the refinery analysis is available in Chapter 4.3.3 of the DRIA.

TABLE IX–13—CRITERIA POLLUTANT EMISSION REDUCTIONS FROM REFINERIES FROM THE PROPOSAL AND ALTERNATIVE IN 2055

Pollutant	CY 2055 refinery emission reductions (U.S. tons)	
	Proposal	Alternative
NO_X	1,785	1,298

TABLE IX–13—CRITERIA POLLUTANT EMISSION REDUCTIONS FROM REFINERIES FROM THE PROPOSAL AND ALTERNATIVE IN 2055—Continued

Pollutant	CY 2055 refinery emission reductions (U.S. tons)	
	Proposal	Alternative
$PM_{2.5}$	436	318
VOC	1,227	894
SO_2	642	468

Like the downstream emission reductions and the EGU emission increases, the refinery emission impacts of the alternative are 20 to 30 percent smaller than the proposal.

3. Comparison of Net Emissions Impacts

While we present a net emissions impact of the alternative CO_2 emission standards, it is important to note that some upstream emission sources are not included in the analysis. Although we expect the alternative to reduce demand for refined fuels, we did not quantify emissions changes associated with producing or extracting crude or transporting crude or refined fuels. Also, because our analysis of refinery emissions only included select criteria pollutants, refinery emission impacts are therefore included in net criteria emission impacts for 2055 but not net CO_2 emission impacts. Therefore, this analysis likely underestimates the net emissions reductions that may result from the alternative.

Table IX–14 shows a summary of our modeled downstream, upstream, and net CO_2 emission impacts of the alternative relative to the reference case, in million metric tons, for calendar years 2035, 2045, and 2055.

TABLE IX–14—ANNUAL NET CO_2 EMISSION IMPACTS [a] FROM THE ALTERNATIVE IN CALENDAR YEARS (CYS) 2035, 2045, AND 2055

Pollutant	CY 2035 impacts (MMT)			CY 2045 impacts (MMT)			CY 2055 impacts (MMT)		
	Downstream	EGU	Net	Downstream	EGU	Net	Downstream	EGU	Net
CO_2	−36	15	−22	−73	12	−62	−90	8	−82

[a] We present emissions reductions as negative numbers and emission increases as positive numbers.

In 2055, we estimate the alternative would result in a net decrease of 82 million metric tons of CO_2 emissions. The net reduction for the proposal is 114 million metric tons. The net decreases become larger between 2035 and 2055 as we project the HD fleet to turn over and the power grid to use less fossil fuels.

In Table IX–15, we present the cumulative net CO_2 emissions impact that we expect would result from the proposed standards and the alternative, in billion metric tons (BMT). Overall, we expect downstream reduction in CO_2 emissions to be far larger than upstream increases from EGUs, and we expect the alternative would result in a net reduction of 1.3 billion metric tons from CYs 2027 to 2055. This is about 28 percent less than the 1.8 billion metric tons of cumulative CO_2 emissions reductions we expect from the proposal.

TABLE IX–15—CUMULATIVE 2027–2055 EGU CO_2 EMISSION IMPACTS [a] (IN BMT) OF THE ALTERNATIVE

Pollutant	Proposal			Alterative		
	Downstream	EGU	Net	Downstream	EGU	Net
Carbon Dioxide (CO_2)	−2.2	0.4	1.8	−1.6	0.3	1.3

[a] We present emissions reductions as negative numbers and emission increases as positive numbers.

Table IX–16 contains a summary of the modeled net impacts of the alternative CO_2 emission standards on criteria pollutant emissions considering downstream and EGUs, relative to the reference case for calendar years 2035 and 2045. Table IX–17 contains a similar summary for calendar year 2055 that includes estimates of net impacts of refinery, EGU, and downstream emissions.

TABLE IX–16—ANNUAL NET IMPACTS [a] ON CRITERIA POLLUTANT EMISSIONS FROM THE ALTERNATIVE IN CALENDAR YEARS (CYS) 2035 AND 2045

Pollutant	CY 2035 impacts (U.S. tons)			CY 2045 impacts (U.S. tons)		
	Downstream	EGU	Net	Downstream	EGU	Net
NO_X	−11,471	2,054	−9,417	−40,460	1,625	−38,836
$PM_{2.5}$	−199	885	687	−501	761	260
VOC	−4,438	458	−3,980	−10,366	563	−9,802
SO_2	−147	7,235	7,088	−298	1,863	1,565

[a] We present emissions reductions as negative numbers and emission increases as positive numbers.

TABLE IX–17—NET IMPACTS [a] ON CRITERIA POLLUTANT EMISSIONS FROM THE ALTERNATIVE IN CY 2055

Pollutant	CY 2055 impacts (U.S. tons)			
	Downstream	EGU	Refinery	Net
NO_X	−51,027	575	−1,298	−51,750
$PM_{2.5}$	−701	549	−318	−471
VOC	−15,139	551	−894	−15,482
SO_2	−373	666	−468	−175

[a] We present emissions reductions as negative numbers and emission increases as positive numbers.

By 2055, when considering downstream, EGU, and refinery emissions, we estimate a net decrease in emissions from all pollutants modeled (*i.e.,* NO_X, $PM_{2.5}$, VOC, and SO_2). In earlier years, when considering only downstream and EGU emissions, we estimate net decreases of NO_X and VOC emissions, but net increases of $PM_{2.5}$ and SO_2 emissions. These increases become smaller over time. All net emission impacts for the alternative, whether they are positive or negative, are smaller in magnitude than for the proposal.

C. Program Costs Comparison of Proposal and Alternative

Using the cost elements outlined in Sections IV.B, IV.C, and IV.D, we have estimated the costs associated with the proposal and alternative relative to the reference case, as shown in Table IX–18. Costs are presented in more detail in Chapter 3 of the DRIA. As noted earlier, costs are presented in 2021 dollars in undiscounted annual values along with net present values at both 3- and 7-percent discount rates with values discounted to the 2027 calendar year.

As shown in Table IX–18, our analysis shows that the proposal scenario would have the lowest cost.

TABLE IX–18—TOTAL TECHNOLOGY, OPERATING COST AND EVSE COST IMPACTS OF THE PROPOSED OPTION RELATIVE TO THE REFERENCE CASE AND THE ALTERNATIVE OPTION RELATIVE TO THE REFERENCE CASE, ALL REGULATORY CLASSES AND ALL FUELS,

[Millions of 2021 dollars] [a]

Calendar year	Proposal				Alternative			
	Total technology costs	Total operating costs	Total EVSE costs	Total program cost	Total technology costs	Total operating costs	Total EVSE costs	Total program cost
2027	$2,000	−$330	$1,300	$3,000	$920	−$180	$710	$1,400
2028	1,800	−790	1,600	2,500	1,100	−490	1,100	1,600
2029	1,700	−1,400	1,900	2,200	1,000	−920	1,300	1,400
2030	2,000	−2,100	2,000	1,900	1,400	−1,400	1,500	1,400
2031	2,300	−2,800	2,200	1,700	1,400	−2,000	1,700	1,100
2032	2,000	−3,800	2,600	860	1,400	−2,700	1,900	510
2033	1,500	−4,900	2,600	−820	960	−3,500	1,800	−710
2034	1,300	−6,100	2,600	−2,200	810	−4,300	1,800	−1,700
2035	1,000	−7,400	2,500	−3,800	620	−5,200	1,700	−2,900
2036	750	−8,700	2,500	−5,500	440	−6,200	1,700	−4,000
2037	620	−10,000	2,500	−7,000	350	−7,200	1,700	−5,100
2038	410	−12,000	2,500	−8,700	200	−8,200	1,700	−6,300
2039	220	−13,000	2,600	−10,000	70	−9,100	1,800	−7,300
2040	140	−14,000	2,600	−12,000	9	−10,000	1,800	−8,400
2041	−40	−16,000	2,600	−13,000	−120	−11,000	1,800	−9,400
2042	−200	−17,000	2,600	−15,000	−230	−12,000	1,800	−10,000
2043	−360	−18,000	2,700	−16,000	−340	−13,000	1,800	−12,000
2044	−410	−20,000	2,700	−18,000	−370	−14,000	1,900	−13,000
2045	−550	−21,000	2,700	−19,000	−480	−15,000	1,900	−13,000
2046	−690	−22,000	2,700	−20,000	−570	−16,000	1,900	−14,000
2047	−820	−23,000	2,700	−22,000	−670	−17,000	1,900	−15,000
2048	−850	−24,000	2,700	−22,000	−680	−17,000	1,900	−16,000
2049	−970	−25,000	2,800	−23,000	−770	−18,000	1,900	−17,000
2050	−1,100	−26,000	2,800	−24,000	−850	−18,000	1,900	−17,000
2051	−1,100	−27,000	2,800	−25,000	−860	−19,000	2,000	−18,000
2052	−1,200	−28,000	2,900	−26,000	−940	−20,000	2,000	−19,000
2053	−1,300	−29,000	2,900	−27,000	−1,000	−21,000	2,000	−20,000
2054	−1,400	−30,000	2,900	−28,000	−1,100	−21,000	2,000	−20,000
2055	−1,500	−31,000	2,900	−29,000	−1,200	−22,000	2,100	−21,000
PV, 3%	9,000	−250,000	47,000	−190,000	4,000	−180,000	33,000	−140,000
PV, 7%	10,000	−120,000	29,000	−85,000	5,400	−87,000	20,000	−62,000
EAV, 3%	470	−13,000	2,500	−10,000	210	−9,100	1,700	−7,200
EAV, 7%	820	−10,000	2,300	−6,900	440	−7,100	1,600	−5,100

[a] Values show 2 significant digits; negative cost values denote savings; calendar year values are undiscounted, present values are discounted to 2027. Program Cost is the sum of Total Tech Cost, Total Operating Cost, and total EVSE costs.

D. Benefits

1. Social Cost of GHGs

Our estimates of the climate benefits from the GHG emissions reductions associated with the alternative are similar to those discussed for the proposal in Section VII of this preamble. Table IX–19 presents the estimated annual, undiscounted climate benefits (*i.e.,* total GHG benefits), and consequently the annual quantified benefits (*i.e.,* total GHG benefits), for each of the four interim social cost of GHG (SC–GHG) values estimated by the Interagency Working Group on Social Cost of Greenhouse Gases [1007] for the years beginning with the first year of rule implementation, 2027, through 2055 for the proposed program. Also shown are the present values and equivalent annualized values associated with each of the four interim SC–GHG values. For more detailed information about the climate benefits analysis conducted for the proposed and alternative programs, please refer to Section 7.1 of the draft RIA. Our analysis includes CO_2 emission increases from EGUs (see Section V and Section IX.B); however, it does not include upstream emissions impacts associated with liquid fuel refining.

[1007] Interagency Working Group on Social Cost of Greenhouse Gases (IWG). 2021. Technical Support Document: Social Cost of Carbon, Methane, and Nitrous Oxide Interim Estimates under Executive Order 13990. February. United States Government. Available at: *https://www.whitehouse.gov/briefing-room/blog/2021/02/26/a-return-to-science-evidence-based-estimates-of-the-benefits-of-reducing-climate-pollution/.*

TABLE IX–19—CLIMATE BENEFITS FROM REDUCTION IN GHG EMISSIONS ASSOCIATED WITH THE PROPOSAL AND ALTERNATIVE, MILLIONS OF 2021 DOLLARS

Calendar year	Proposal				Alternative			
	Total technology costs	Total operating costs	Total EVSE costs	Total program cost	Total technology costs	Total operating costs	Total EVSE costs	Total program cost
5% Average	3% Average	2.5% Average	3% 95th Percentile	5% Average	3% Average	2.5% Average	3% 95th Percentile	
2027	33	$110	$160	$320	$17	$57	$83	$170
2028	74	240	350	710	45	140	210	430
2029	120	400	580	1,200	80	250	370	760
2030	190	610	880	1,800	130	420	610	1,300
2031	290	900	1,300	2,700	200	630	910	1,900
2032	410	1,300	1,800	3,800	290	890	1,300	2,700
2033	530	1,600	2,300	4,900	380	1,200	1,700	3,500
2034	660	2,000	2,800	6,000	470	1,400	2,000	4,300
2035	780	2,300	3,300	7,100	550	1,700	2,400	5,000
2036	940	2,800	4,000	8,500	670	2,000	2,800	6,000
2037	1,100	3,300	4,700	9,900	790	2,300	3,300	7,100
2038	1,300	3,800	5,400	12,000	920	2,700	3,800	8,200
2039	1,500	4,300	6,100	13,000	1,100	3,100	4,400	9,400
2040	1,700	4,900	6,900	15,000	1,200	3,500	4,900	11,000
2041	1,900	5,400	7,600	16,000	1,400	3,900	5,400	12,000
2042	2,100	5,900	8,300	18,000	1,500	4,200	5,900	13,000
2043	2,300	6,500	9,000	20,000	1,700	4,600	6,500	14,000
2044	2,500	7,000	9,800	21,000	1,800	5,000	7,000	15,000
2045	2,700	7,500	10,000	23,000	2,000	5,400	7,500	16,000
2046	2,900	8,000	11,000	24,000	2,100	5,700	7,900	17,000
2047	3,100	8,400	12,000	26,000	2,200	6,000	8,300	18,000
2048	3,300	8,800	12,000	27,000	2,300	6,300	8,700	19,000
2049	3,500	9,200	13,000	28,000	2,500	6,600	9,100	20,000
2050	3,700	9,700	13,000	30,000	2,600	7,000	9,600	21,000
2051	3,800	10,000	14,000	30,000	2,700	7,200	9,900	22,000
2052	4,000	10,000	14,000	31,000	2,900	7,400	10,000	22,000
2053	4,100	11,000	15,000	32,000	3,000	7,600	10,000	23,000
2054	4,300	11,000	15,000	32,000	3,100	7,800	11,000	23,000
2055	4,400	11,000	15,000	33,000	3,200	8,000	11,000	24,000
PV	22,000	87,000	130,000	260,000	16,000	62,000	96,000	190,000
EAV	1,400	4,600	6,500	14,000	1,000	3,300	4,700	9,900

2. Criteria Pollutant Reductions

Table IX–20 presents the total annual, undiscounted $PM_{2.5}$-related health benefits estimated for the stream of years beginning with the first year of rule implementation, 2027, through calendar year 2055 for the proposed and alternative programs. The range of benefits in Table IX–20 reflects the range of premature mortality estimates based on risk estimates reported from two different long-term exposure studies using different cohorts to account for uncertainty in the benefits associated with avoiding PM-related premature deaths.[1008] [1009] Although annual benefits presented in the table are not discounted for the purposes of present value or annualized value calculations, annual benefits do reflect the use of 3-percent and 7-percent discount rates to account for avoided health outcomes that are expected to accrue over more than a single year (the ''cessation lag'' between the change in PM exposures and the total realization of changes in health effects). The table also displays the present and annualized value of estimated benefits that occur from 2027 to 2055, discounted using both 3-percent and 7-percent discount rates and reported in 2021 dollars. We estimate that the present value of benefits for the alternative program is $11 to $21 billion at a 3 percent discount rate and $4.2 to $8.2 billion at a 7 percent discount rate (2021 dollars), which is less than that of the proposed program. For more detailed information about the benefits analysis conducted for the proposed and alternative programs, please refer to Chapter 7 of the draft RIA.

TABLE IX—20-YEAR-OVER-YEAR MONETIZED $PM_{2.5}$-RELATED HEALTH BENEFITS ASSOCIATED WITH THE PROPOSAL AND ALTERNATIVE

[Millions of 2021 Dollars]

	Proposal		Alternative	
	3% Discount rate	7% Discount rate	3% Discount rate	7% Discount rate
2027	$6.4–13	$5.7–12	$4.7–9.6	$4.2–8.7
2028	15–31	13–28	12–25	11–22
2029	26–53	23–48	22–44	19–40
2030	16–33	14–30	12–24	11–21
2031	(22)–(45)	(20)–(40)	(6.8)–(18)	(6.2)–(16)

[1008] Wu, X, Braun, D, Schwartz, J, Kioumourtzoglou, M and Dominici, F (2020). Evaluating the impact of long-term exposure to fine particulate matter on mortality among the elderly. Science advances 6(29): eaba5692.

[1009] Pope III, CA, Lefler, JS, Ezzati, M, Higbee, JD, Marshall, JD, Kim, S–Y, Bechle, M, Gilliat, KS, Vernon, SE and Robinson, AL (2019). Mortality risk and fine particulate air pollution in a large, representative cohort of US adults. Environmental health perspectives 127(7): 077007.

TABLE IX—20-YEAR-OVER-YEAR MONETIZED $PM_{2.5}$-RELATED HEALTH BENEFITS ASSOCIATED WITH THE PROPOSAL AND ALTERNATIVE—Continued

[Millions of 2021 Dollars]

	Proposal		Alternative	
	3% Discount rate	7% Discount rate	3% Discount rate	7% Discount rate
2032	(70)–(140)	(64)–(130)	(37)–(82)	(34)–(74)
2033	(120)–(240)	(110)–(210)	(67)–(150)	(61)–(130)
2034	(160)–(330)	(150)–(300)	(97)–(210)	(88)–(190)
2035	(210)–(410)	(190)–(370)	(120)–(260)	(110)–(240)
2036	(110)–(220)	(100)–(200)	(57)–(130)	(53)–(110)
2037	31–62	27–57	42–76	37–67
2038	220–440	200–400	180–340	160–310
2039	440–880	400–790	340–660	300–590
2040	700–1,400	630–1,300	520–1,000	470–920
2041	870–1,700	780–1,500	630–1,200	570–1,100
2042	1,000–2,100	940–1,900	750–1,500	680–1,300
2043	1,200–2,400	1,100–2,200	880–1,700	790–1,600
2044	1,400–2,800	1,300–2,500	1,000–2,000	920–1,800
2045	1,600–3,100	1,400–2,800	1,200–2,300	1,000–2,000
2046	1,700–3,400	1,600–3,100	1,300–2,400	1,100–2,200
2047	1,900–3,600	1,700–3,300	1,300–2,600	1,200–2,400
2048	2,000–3,900	1,800–3,500	1,400–2,800	1,300–2,500
2049	2,100–4,100	1,900–3,700	1,500–3,000	1,400–2,700
2050	2,300–4,400	2,000–3,900	1,600–3,100	1,500–2,800
2051	2,300–4,500	2,100–4,100	1,700–3,300	1,500–2,900
2052	2,400–4,700	2,200–4,200	1,800–3,400	1,600–3,000
2053	2,500–4,800	2,300–4,400	1,800–3,500	1,600–3,100
2054	2,600–5,000	2,300–4,500	1,900–3,600	1,700–3,200
2055	2,700–5,200	2,400–4,600	1,900–3,700	1,700–3,300
PV	15,000–29,000	5,800–11,000	11,000–21,000	4,200–8,200
EAV	780–1,500	470–910	570–1,100	340–670

Notes: The range of benefits in this table reflect the range of premature mortality estimates derived from the Medicare study (Wu et al., 2020) and the NHIS study (Pope et al., 2019). All benefits estimates are rounded to two significant figures. Annual benefit values presented here are not discounted. Negative values in parentheses are health disbenefits related to increases in estimated emissions. The present value of benefits is the total aggregated value of the series of discounted annual benefits that occur between 2027–2055 (in 2021 dollars) using either a 3% or 7% discount rate. The benefits associated with the standards presented here do not include health benefits associated with reduced criteria pollutant emissions from refineries. The benefits in this table also do not include the full complement of health and environmental benefits that, if quantified and monetized, would increase the total monetized benefits.

3. Energy Security

In Table IX–21, EPA presents the macroeconomic oil security premiums and the energy security benefits for the alternative CO_2 emission standards for the years 2027 through 2055. The oil security premiums and the energy security benefits for the proposed CO_2 emission standards can be found in Section VII.

TABLE IX—21 OIL SECURITY PREMIUMS (2021$/BARREL) AND THE ENERGY SECURITY BENEFITS (MILLIONS OF 2021$) FROM 2027–2055 FOR ALTERNATIVE GHG EMISSION STANDARDS [1010]

Calendar year	Oil security premium (range)	Benefits	
		Proposal	Alternative
2027	$3.57 ($0.79–$6.65)	$15	$8
2028	$3.65 ($0.80–$6.79)	33	20
2029	$3.72 ($0.80–$6.92)	55	35
2030	$3.79 ($0.81–$7.06)	91	63
2031	$3.87 ($0.85–$7.22)	140	100
2032	$3.96 ($0.89–$7.38)	210	150
2033	$4.04 ($0.92–$7.53)	280	200
2034	$4.13 ($0.96–$7.69)	350	250

[1010] ORNL's oil security premium methodology provides estimates through 2050. For years 2051–2055 we use the value of the 2050 oil security premium.

TABLE IX—21 OIL SECURITY PREMIUMS (2021$/BARREL) AND THE ENERGY SECURITY BENEFITS (MILLIONS OF 2021$) FROM 2027–2055 FOR ALTERNATIVE GHG EMISSION STANDARDS [1010]—Continued

Calendar year	Oil security premium (range)	Benefits	
		Proposal	Alternative
2035	$4.21 ($1.00–$7.85)	420	300
2036	$4.29 ($1.03–$7.98)	490	350
2037	$4.36 ($1.06–$8.11)	560	400
2038	$4.44 ($1.10–$8.24)	620	450
2039	$4.51 ($1.13–$8.37)	690	490
2040	$4.59 ($1.16–$8.50)	750	530
2041	$4.65 ($1.19–$8.62)	800	570
2042	$4.71 ($1.21–$8.73)	850	610
2043	$4.76 ($1.24–$8.85)	900	650
2044	$4.82 ($1.26–$8.96)	940	680
2045	$4.88 ($1.29–$9.08)	990	710
2046	$4.94 ($1.32–$9.18)	1,000	740
2047	$5.00 ($1.35–$9.28)	1,100	760
2048	$5.06 ($1.37–$9.37)	1,100	790
2049	$5.12 ($1.40–$9.46)	1,100	810
2050	$5.18 ($1.43–$9.56)	1,200	840
2051	$5.18 ($1.43–$9.56)	1,200	850
2052	$5.18 ($1.43–$9.56)	1,200	870
2053	$5.18 ($1.43–$9.56)	1,200	890
2054	$5.18 ($1.43–$9.56)	1,300	900
2055	$5.18 ($1.43–$9.56)	1,300	910
PV, 3%		12,000	8,500
PV, 7%		6,000	4,300
EAV, 3%		620	440
EAV, 7%		490	350

E. How do the proposal and alternative compare in overall benefits and costs?

Table IX–22 shows the net benefits for the proposal and alternative relative to the baseline, at 3 percent and 7 percent discount rates, respectively. Section VIII.B of this preamble and Chapter 7 of the DRIA present more detailed results. These net benefits include benefits associated with reduced vehicle GHG and non-GHG emissions and EGU CO2 emissions, but do not include any impacts associated with petroleum extraction, transportation or liquid fuel refining.

TABLE IX–22—NET BENEFITS ASSOCIATED WITH THE PROPOSAL AND ALTERNATIVE

[Millions of 2021 dollars]

	Proposal				Alternative			
	5% Average	3% Average	2.5% Average	3% 95th Percentile	5% Average	3% Average	2.5% Average	3% 95th Percentile
2055	$39,000	$46,000	$50,000	$68,000	$28,000	$33,000	$36,000	$49,000
PV, 3%	260,000	320,000	370,000	500,000	180,000	230,000	260,000	360,000
PV, 7%	120,000	180,000	230,000	360,000	86,000	130,000	170,000	260,000
EAV, 3%	14,000	17,000	19,000	26,000	9,800	12,000	13,000	19,000

TABLE IX–22—NET BENEFITS ASSOCIATED WITH THE PROPOSAL AND ALTERNATIVE—Continued

[Millions of 2021 dollars]

	Proposal				Alternative			
	5% Average	3% Average	2.5% Average	3% 95th Percentile	5% Average	3% Average	2.5% Average	3% 95th Percentile
EAV, 7%	9,300	12,000	14,000	22,000	6,800	9,000	10,000	16,000

Notes: Climate benefits are based on changes (reductions) in CO_2, CH_4, and N_2O emissions and are calculated using four different estimates of the social cost of carbon (SC–CO_2), the social cost of methane (SC–CH_4), and the social cost of nitrous oxide (SC–N_2O) (model average at 2.5 percent, 3 percent, and 5 percent discount rates; 95th percentile at 3 percent discount rate). We emphasize the importance and value of considering the benefits calculated using all four SC–CO_2, SC–CH_4, and SC–N_2O estimates. As discussed in the Technical Support Document: Social Cost of Carbon, Methane, and Nitrous Oxide Interim Estimates under Executive Order 13990 (IWG 2021), a consideration of climate benefits calculated using discount rates below 3 percent, including 2 percent and lower, are also warranted when discounting intergenerational impacts. The same discount rate used to discount the value of damages from future emissions (SC–GHG at 5, 3, 2.5 percent) is used to calculate present value of SC–GHGs for internal consistency, while all other costs and benefits are discounted at either 3 percent or 7 percent. Annual costs and benefits in 2055 shown are undiscounted values. Note that the non-GHG impacts associated with the standards included here do not include the full complement of health and environmental effects that, if quantified and monetized, would increase the total monetized benefits. Instead, the non-GHG benefits are based on benefit-per-ton values that reflect only human health impacts associated with reductions in $PM_{2.5}$ exposure. For the purposes of presentational clarity in the calculation of net benefits, $PM_{2.5}$-related benefits are averaged across the range of alternative estimates for 2055. For PV and EAV estimated with a 3 percent discount rate, we calculate net benefits using $PM_{2.5}$-related benefits based on the Pope III et al., 2019 study of premature mortality. For PV and EAV estimated with a 7 percent discount rate, net benefits reflect $PM_{2.5}$-related benefits based on the Wu et al., 2020 study.

X. Preemption of State Standards and Requirements for New Locomotives or New Engines Used in Locomotives

A. Overview

In April of 1998, EPA adopted its first-ever regulations addressing air pollutant emissions from new locomotives and new locomotive engines (including freshly built and remanufactured) under CAA section 213(a)(5), 42 U.S.C. 7547(a)(5).[1011] As part of the 1998 final rule EPA also promulgated regulations designed to codify the nonroad preemption provisions of section 209(e) of the CAA and to clarify the prohibition on certain new nonroad engines or nonroad vehicles standards by states or political subdivisions and other requirements relating to the control of emissions, including from new locomotives or new engines used in locomotives. EPA adopted a regulation that set a period equivalent in length to 133 percent of the regulatory useful life of a new locomotive or engine during which certain non-Federal requirements are preempted from applying to locomotives or engines used in locomotives.[1012] EPA also adopted regulations to implement the CAA provisions allowing California to request authorization for other non-Federal requirements on non-new locomotives and engines used in locomotives not otherwise prohibited.[1013]

CAA section 209(e)(2)(B) requires EPA to promulgate regulations implementing subsection 209(e), which addresses the prohibition of state standards regarding certain classes of nonroad engines or vehicles and potential EPA authorization of state standards for other nonroad engines or vehicles. The prohibited state standards or other requirements relating to the control of emissions include, under CAA section 209(e)(1)(B), those affecting new locomotives or new engines used in locomotives. Such state requirements cannot be authorized by EPA under section 209(b), pursuant to the final sentence of section 209(e)(1), or under section 209(e)(2). However, section 209(e)(2) requires EPA to authorize, subject to certain criteria, California's adoption and enforcement of standards and other requirements relating to control of emissions from nonroad vehicles or engines other than those referred to in paragraph 209(e)(1), which would include non-new locomotives and non-new engines used in locomotives.

EPA is concerned that our preemption regulations as adopted, particularly in extending preemption well beyond the CAA language of prohibiting the state regulation of new locomotives and new engines used in locomotives and to an extended point at which locomotives and engines are no longer new, may no longer be appropriate.[1014] Specifically, our existing regulations may have the unintended effect of both exceeding Congress' prescribed prohibition on state regulation of new locomotives and engines in section 209(e)(1) and impeding states from adopting innovative programs to reduce locomotive emissions that may be permissible under CAA section 209(e)(2). In this rule, EPA proposes to revise our locomotive preemption regulations to better align with the precise language Congress provided in section 209(e) and the Congressional directive to EPA to implement the prohibition of state regulation of new locomotives and new engines used in locomotives while ensuring that states are not impeded from adopting programs as allowed by the CAA to address the contribution of air pollutant emissions from non-new locomotives and engines to their air quality issues. In this section, EPA outlines the reasons that its previous extension of the categorical prohibition of state regulations applicable to locomotives and engines up to 133 percent of the regulatory useful life is not required by the CAA and may no longer be appropriate considering developments since the 1998 rule. We believe it is necessary to better align our regulatory text with the plain language of the CAA to provide regulatory space for state controls that do not inappropriately affect the design and manufacture of new locomotives or new engines used in locomotives.

B. Background

1. EPA's New Locomotive and Engine Standards and the Regulated Fleet [1015]

The Clean Air Act amendments of 1990 called on EPA to adopt emission

[1011] Emission Standards for Locomotives and Locomotive Engines, 63 FR 18978 (April 16, 1998), codified at 40 CFR parts 85, 89 and 92.

[1012] For purely informational purposes, EPA notes that it is not aware that its regulations addressing the scope of preemption of state regulation of other types of nonroad engines and nonroad vehicles present the concerns described here relating to locomotives. Moreover, EPA's regulations do not set an equivalent period of preemption for any other class of nonroad engines (other than locomotives). EPA has issued several authorizations of California regulations relating to other non-new nonroad standards. See 80 FR 76468 (December 9, 2015); 78 FR 58090 (September 20, 2013). This action does not reopen any aspect of EPA's preemption regulations, policies, or actions regarding any other nonroad engines or vehicles, or regarding any other topics besides those expressly described in the text of the preamble and the proposed regulations.

[1013] To avoid confusion of the term ''used'' sometimes meaning ''placed or mounted,'' we employ the term ''non-new'' to describe engines that do not meet the definition of ''new'' in section 1074.5.

[1014] EPA announced an intent to review this issue in November 2022. See *https://www.epa.gov/regulations-emissions-vehicles-and-engines/petitions-address-harmful-emissions-locomotives.*

[1015] EPA provides this discussion of the Federal locomotive requirements under the CAA for

standards for new locomotives and new locomotive engines to achieve the greatest degree of emission reduction achievable through the application of technology which EPA determines will be available for the locomotives or engines, giving appropriate consideration to the cost of applying such technology within the period of time available to manufacturers and to associated noise, energy, and safety factors. CAA section 213(a)(5), 42 U.S.C. 7547(a)(5). From the beginning, EPA's new locomotive emission control program identified two ways by which locomotives and engines would be deemed ''new'' and thus subject to the standards: EPA imposed emission standards for so-called ''freshly manufactured'' locomotives that have increasing stringency levels based on which ''Tier'' the new locomotive belongs to, and We applied emission standards for older locomotives built beginning in 1973 that would apply when those older locomotives are ''remanufactured'' (all of the power assemblies are either replaced or are inspected and requalified either all at once or within a 5-year period) according to their original Tier. This approach was necessary due to the very long service lives of locomotives. As we explained in the 1998 rule, the service life of a locomotive can extend to 40 years and beyond, during which period the engine and the locomotive undergo several extensive remanufacturing operations that EPA has determined makes the locomotive or engine ''new'' again. These remanufacturing operations generally consist of, at a minimum, the replacement of the power assemblies (*i.e.,* pistons, piston rings, cylinder liners, cylinder heads, fuel injectors, valves, etc.) with new components (or components that are in new condition) to restore the locomotive to the condition it was in when originally manufactured with respect to performance, durability, and emissions. Because they are designed to be rebuilt on a regular schedule, locomotives can remain in service as long as the main engine block remains serviceable. EPA's locomotive remanufacture program reduces emissions from these older locomotives, which are fitted with better parts and systems when they are remanufactured and become ''new'' again. However, the stringency of the remanufacture standards has been limited by the extent to which new emission control technology can be retrofit on these older designs.

Not surprisingly, recent fleet profile data shows that the in-service locomotive fleet continues to be dominated by Tier 2 and earlier locomotives subject to EPA's less stringent emission standards.[1016] According to data supporting EPA's 2020 National Emission Inventory, there are 16,787 locomotives in the Class I line-haul fleet.[1017] Of these, about 26 percent are Tier 3 or Tier 4 locomotives subject to more stringent emission standards.[1018] The other 74 percent are Tier 2 or earlier locomotives, broken down as follows: About 62 percent are remanufactured to the revised remanufacture standards adopted in 2008; 11 percent have not been remanufactured and continue to have the higher emissions of their original certification tier; and a small number, about 1 percent, are unregulated (pre-1973) locomotives. Class II and III [1019] railroads are not generally subject to remanufacturing obligations. To the extent one of these railroads purchases a locomotive that was previously certified to EPA's standards, then the railroad must ensure the locomotive continues to comply with those standards. The Class II and III line-haul fleet consists of 3,447 locomotives. Of these, about 7 percent are Tier 3 or 4 locomotives. The other 93 percent are Tier 2 or earlier, broken down as follows: About 39 percent of the locomotives are unregulated (pre-1973); 48 percent are Tier 0; and The other six percent are Tier 1 or Tier 2.

Given the large share of older locomotives in the Class I, II and III railroad fleets, and their emissions contribution to ambient concentrations of air pollution that may cause violations of national ambient air quality standards (NAAQS), states and local entities who must develop state implementation plans (SIPs) demonstrating attainment of NAAQS have expressed interest in obtaining greater emissions reductions from this sector, including possibly adopting programs to achieve greater emission reductions from non-new locomotives beyond those achieved by EPA's standards applicable to new locomotives. States and local entities have expressed particular interest in addressing emissions from non-new locomotives for areas located along high traffic rail lines and/or in communities with environmental justice concerns. However, notwithstanding Congress' provision in section 209(e)(2) for EPA to authorize such state efforts, subject to certain criteria, the agency now believes that the pre-emption regulation for locomotives adopted in the 1998 rule might preclude states (following California as described Section X.B.2) from exploring some innovative local programs.

2. EPA's Regulatory Preemption of State Control of Locomotive and Engine Emissions

As part of the 1998 locomotive rule EPA established regulations that prohibited state regulation of new locomotives and new engines used in locomotives. This is currently reflected in the regulatory text of 40 CFR 1074.12(a), and reflects Congress' command in CAA section 209(e)(1)(B). In addition, to provide certainty to state, localities, and industry regarding the period when certain state controls would be prohibited under 209(e)(1)(B), EPA also provided that such prohibition would last for a period equal to 133 percent of the useful life of a new locomotive or new engine used in a locomotive—even after the locomotive or engine was placed into service and ceased to be ''new.'' [1020] This is currently reflected at section 1074.12(b) of EPA's rule, along with several specific types of standards or other requirements that EPA then concluded are preempted. This decision to codify a prohibition period extending beyond when locomotives are new and to enumerate several preempted types of requirements was based on EPA's understanding of the nature of the locomotive industry, the regulatory landscape, and the then-existing emission control technologies considering the CAA and other relevant legal considerations.[1021]

background purposes only. In this proposal, EPA is not reopening the Federal locomotive requirements, and any comments on such will be deemed beyond the scope of the action.

[1016] 2020 National Emissions Inventory Locomotive Methodology Prepared for U.S. Environmental Protection Agency by Eastern Research Group, Inc. (May 19, 2022). *https://gaftp.epa.gov/air/nei/2020/doc/supporting_data/nonpoint/Rail/2020_NEI_Rail_062722.pdf.*

[1017] The current classification of railroads adopted by the Surface Transportation Board (STB) in 2021 is based on annual carrier operating revenue, as follows: Class I railroads, greater than $943.9 million; Class II railroads, $42.4 to $943.9 million; Class III railroads less than $42.4 million. See 49 CFR 1201 (1–1 Classification of Carriers).

[1018] EPA took action to set additional emission standards for new locomotives and engines in 2008; see final rule published at 73 FR 37096 (June 30, 2008), Control of Emissions of Air Pollution From Locomotive Engines and Marine Compression-Ignition Engines Less Than 30 Liters per Cylinder.

[1019] *Ibid.*

[1020] Proposed Rule: Emission Standards for Locomotives and Locomotive Engines, 62 FR 6366 (February 11, 1997)

[1021] These considerations included: The language of the CAA and its legislative history (62 FR 6397–6398; Summary and Analysis of Comments on the Notice of Proposed Rulemaking for Emission

Continued

In 1998, the locomotive manufacturers and remanufacturers were anticipating a need to develop emission technologies to apply to their locomotive engines with uncontrolled emissions to comply with the first three Tiers of locomotive emission standards (Tiers 0, 1, and 2). They would eventually need to apply technology to meet Tiers 3 and 4, adopted in 2008 and fully phased-in by 2015. As EPA explained in 1998, there was a risk that some state regulations could have affected the design and manufacture of new locomotives and new engines used in locomotives (including freshly manufactured and remanufactured), and additional certainty was determined to be beneficial for all interested parties.[1022] At the same time, in the 1998 rulemaking EPA explained that states may regulate the use and operation of locomotives in a manner that does not significantly affect the design or manufacture of a new (including remanufactured) locomotive or engine, potentially allowing states to control nuisances, and that California (and other states following California) may obtain an EPA authorization (waiver of Federal preemption) for standards and other requirements relating to the control of emissions from non-new locomotives and non-new engines used in locomotives, provided they did not significantly affect the design and manufacture of new locomotives or engines.[1023] This allowance is currently reflected in EPA's rules at section 1074.101 through 1074.115. However, to date California has not sought EPA authorization under section 209(e) of any program to address emissions from non-new locomotives or engines.

By defining the period of preemption to be 133 percent of the useful life of a new locomotive or engine EPA intended to preclude certain forms of potential state regulation of non-new locomotives due to the concern they could significantly impact the design and manufacture of new locomotives and new engines used in locomotives. EPA's intention to preclude some but not all forms of state regulation is clearly discussed in the 1997 NPRM,[1024] in the Summary and Analysis of Comments,[1025] and in the final 1998 rulemaking[1026] where we explained that ''The list of state controls that are explicitly preempted under today's regulation is not intended to be exclusive''[1027] and ''. . . all state requirements relating to the control of emissions from in-use locomotives and locomotive engines, including state requirements not listed as preempted [. . .], are subject to section 209(e)(2)'s waiver requirement.''[1028] This preemption language was recodified in the sections of 40 CFR part 1074, in October of 2008, as part of EPA's final rule establishing standards for the Control of Emissions from Nonroad Spark-Ignition Engines and Equipment.[1029]

C. Evaluation of Impact of Regulatory Preemption

In EPA's final 1998 action, EPA adopted regulations preempting certain state and local controls of locomotives and engines used in locomotives, which we determined to be appropriate based on our understanding of the information at the time.[1030] The intent of these regulations was to provide ''certainty with respect to when state controls would be preempted'' (62 FR 6398) and determine that ''certain categories of potential state requirements would be preempted under the proposed approach'' (62 FR 6398).

EPA's explanation for the preemptions was particularly focused on specific types of controls listed in 40 CFR 1074.12(b), which we deemed categorically preempted for locomotives and engines up to 133 percent of the regulatory useful life.[1031] For all other types of controls, the 1998 Locomotive final rulemaking stated that ''. . . all state requirements relating to the control of emissions from in-use locomotives and locomotive engines, including state requirements not listed as preempted in 40 CFR 85.1603(c)(1), are subject to section 209(e)(2)'s waiver requirement.''[1032] Further, in our response to comments regarding preemption of state regulations we explained, ''states may regulate the use and operation of locomotives in a manner that does not significantly affect the design or manufacture of a new (including remanufactured) locomotive or engine, potentially allowing states to control nuisances.''[1033] As an example, the final rule deviated from the proposal by excluding state in-use testing programs using the Federal test procedure from the list of preempted controls because EPA could not determine that it would violate 209(e)(1)(B).[1034] While these aspects of the 1998 rule make a case that there are opportunities for California to obtain authorization under CAA 209(e)(2) for eligible measures, we are concerned that the effect of our 1998 regulation has been to discourage consideration of all such opportunities.

At the same time, locomotive emission controls have developed significantly since the 1998 rule, and some of these developments call into question the factual underpinnings of EPA's prior decision to categorially preempt certain controls up to 133 percent of the regulatory useful life. It has been 15 years since EPA's 2008 rule was finalized and eight years since the first compliance year of the locomotive Tier 4 emissions standards. With the certainty provided by the long lead time prior to implementation of Tier 4 and the stability provided by a long period of unchanged standards, the emission control technologies for new diesel locomotives are now well established. In developing this proposal, we reviewed the technical basis for the types of controls in 40 CFR 1074.12(b) established in 1998 and evaluated currently available technologies and practices to investigate the extent to which our reasoning in 1998 still holds today, following more recent technological developments and the extent to which emissions control tools may be employed for existing locomotives without necessarily presenting significant effects on the

Standards for Locomotives and Locomotive Engines, 1998), p. 12; court rulings (see 62 FR 6397, *see also Allway Taxi, Inc.* v. *City of New York,* 340 F. Supp. 1120, 1124 (S.D.N.Y. 1972)); Constitutional concerns (Summary and Analysis of Comments on the Notice of Proposed Rulemaking for Emission Standards for Locomotives and Locomotive Engines, 1998, pp. 13, 17, 18); and Technical challenges of states regulating non-new locomotives and engines used in locomotives (Summary and Analysis of Comments on the Notice of Proposed Rulemaking for Emission Standards for Locomotives and Locomotive Engines, 1998, Chapter 1 Section C).

[1022] 63 FR 18979 and 18993–18994.

[1023] Summary and Analysis of Comments on the Notice of Proposed Rulemaking for Emission Standards for Locomotives and Locomotive Engines, EPA, EPA–420–R–97–101, pp. 17–18.

[1024] See 62 FR 6366, 6398, and 6399.

[1025] Summary and Analysis of Comments on the Notice of Proposed Rulemaking for Emission Standards for Locomotives and Locomotive Engines, EPA, EPA–420–R–97–101, pp. 15–19.

[1026] See 63 FR 18978.

[1027] 63 FR 18994.

[1028] *Ibid.*

[1029] Oct 8, 2008, 73 FR 59033, Control of Emissions from Nonroad Spark-Ignition Engines & Equipment.

[1030] See, 63 FR at 18993–18994, codified at 40 CFR 85.1603 Application of definitions; scope of preemption. This was later recodified at 40 CFR 1074.12; see 73 FR 59034 (Oct. 8, 2008).

[1031] Including but not limited to emission standards, mandatory fleet average standards, certification requirements, retrofit and aftermarket equipment requirements, and non-Federal in-use testing requirements.

[1032] See, 63 FR 18994.

[1033] Summary and Analysis of Comments on the Notice of Proposed Rulemaking for Emission Standards for Locomotives and Locomotive Engines, EPA, EPA–420–R–97–101, p. 18.

[1034] 63 FR 18993–18994.

design and manufacture of new locomotives and engines.

We have identified two examples of post-1998 emission controls that states would be prohibited from requiring for non-new locomotives under the language of 40 CFR 1074.12(b), but that initially appear would not significantly affect the design or manufacture of a new locomotive or locomotive engine and in fact have in some cases been voluntarily applied. Although we have not received any submission of an actual regulation addressing controls of this nature, which would need to be evaluated on its own basis under CAA section 209(e)(2), we discuss these possible measures that might not be preempted as requirements applying to new locomotives or new engines used in locomotives if evaluated on a case-by-case basis. Our evaluation suggests that the 1998 regulatory provisions categorically preempting certain controls up to 133 percent of the useful life may be overly restrictive in precluding state consideration of potential measures to reduce emissions from existing locomotives.

One example of a post-1998 control measure that we have identified as potentially not significantly affecting the design or manufacture of a new locomotive or engine is the retrofitting of an auxiliary power unit (APU) to support engine shutdown for idle reduction. In this scenario, installation of such an APU on a locomotive with an engine shutdown timer can enable the main engine to shut down while maintaining power to auxiliary functions such as air brake pressure and battery state of charge. There may be sufficient space and fluids onboard to accommodate this component without disrupting the existing equipment or the design of new remanufacturing kits. Under the terms of current 40 CFR 1074.12(b) this is an example of a requirement that may be categorically preempted because current section 1074.12(b) preempts state retrofit and aftermarket equipment requirements. Without evaluating the technical drawbacks or merits of any specific state requirement for such a retrofitting on existing locomotives, we observe that such a requirement could potentially be consistent with the statutory authorization criteria and be allowed if evaluated on its own merits under 40 CFR 1074.101 through 1074.115. As further evidence that such a retrofit requirement would not likely have an adverse effect on the design of new locomotives, this type of technology retrofit project is often pursued by locomotive operators on a voluntary basis.[1035]

A second example of a post-1998 emission control measure that may not significantly affect the design or manufacture of a new locomotive or engine is the installation of a new load control calibration strategy that better manages load on the main engine while the locomotive is in line haul service. Such technology is utilized today and may be installed on units already in service [1036] and is available as an upgrade in some certified remanufacture kits.[1037] In this scenario, a locomotive would have certain software installed that governs how the engine is used during the route, which helps save fuel and reduces emissions. Because the components involved include minimal hardware, we do not believe implementation of this measure would result in a significant effect on the design of new locomotives. Therefore, a state imposing a requirement that existing locomotives employ it would not necessarily constitute a control of new locomotive emissions. Nonetheless, under the existing regulations, such a control may be categorically preempted. Without evaluating the technical drawbacks or merits of such a state's specific action to impose such a requirement for this kind of more recent technological measure, we believe that our 1998 regulatory text may inappropriately restrict whether a state can request authorization under CAA section 209(e)(2) to impose such a requirement. Therefore, EPA believes that there are in fact reasonable examples of readily available technologies that if included as part of a state regulatory program could be considered for authorization under CAA section 209(e)(2) and our rules at 40 CFR 1074.101 through 1074.115, but that under our 1998 regulatory text in 40 CFR 1074.12(b)—adopted in advance of the development of these newer technological measures—California is currently discouraged from exploring. Any such program should be evaluated on its own terms, if submitted, rather than be assumed to significantly affect design and manufacture of new locomotives under a categorical regulatory preemption provision that did not account for more recent technological measures.

While EPA's adoption of its regulations in 1998 helped facilitate a smooth regulatory progression from uncontrolled to regulated locomotives, the more recent technological developments of pollution control measures, such as those briefly discussed in this Section X, indicate that there may be instances now where the general conclusions reached in 1998 may no longer be supportable, and instead may result in our 1998 preemption rules inappropriately reaching beyond the scope of section 209(e)(1)'s prohibition on requirements that relate to new locomotives and new engines used in locomotives. Although EPA has discussed only some examples of potential control measures that might be considered for application under a state program for existing locomotives without significantly affecting the design and manufacture of new locomotives, the very nature of rapid technological development suggests that it is not necessary or possible for EPA to prejudge, as under the current text of 40 CFR 1074.12, all potential forms of state control of existing locomotives regarding whether they should remain preempted with no possibility of authorization under CAA section 209(e)(2).

EPA further believes that the examples discussed show there is sufficient information available to more generally call into question the conclusion that all the forms of state control explicitly preempted by the current text in 40 CFR 1074.12(b) would necessarily affect how manufacturers and remanufacturers design new locomotives and new engines used in locomotives. Based on these examples, along with the fact that any request from California (for its regulatory and technological approaches) under 40 CFR 1074.101 through 1074.115 would be evaluated on a case-by-case basis, we observe that by removing the language in 40 CFR 1074.12(b) EPA would still be required to evaluate any submission from California under CAA section 209(e)(1) and (2), providing the opportunity for public comment by all interested stakeholders. EPA seeks comment on this assessment and to what extent there would be public benefit if we were to retain the current regulatory text.

While EPA can no longer say, for certain, that our conclusions in 1998 about state imposition of in-use requirements will always be true for

[1035] See, for example, Railway Age, BNSF, Hotstart partner on locomotive retrofit, November 19, 2014. *https://www.railwayage.com/freight/class-i/bnsf-hotstart-partner-on-locomotive-retrofit/* accessed January 2023.

[1036] See, for example, *https://www.nyabproducts.com/leader/* and *https://www.wabteccorp.com/digital-electronics/train-performance-and-automation/trip-optimizer*, accessed January 2023.

[1037] See, for example, Wabtec's certified remanufacture families PGETK0668T1Y and PGETK0668T0C, which are Tier 1 and Tier 0 systems, respectively, that include the Trip Optimizer software as an energy saving design.

those listed forms of standards or requirements, we are also not saying that such measures can or will be authorized under CAA section 209(e)(2) (even for the examples provided). EPA is not concluding in this document that any of these forms of standards, if submitted, would be authorized, or that these forms of standards would not contravene CAA section 209(e)(1). Rather this action to revise 40 CFR 1074.12, if finalized, would better allow California the opportunity to explore, develop, and justify in a program-specific submission for authorization why a certain form of state regulation should be allowed under CAA section 209(e)(2) and our rules at 40 CFR 1074.101 through 1074.115, and allow EPA to evaluate such a submission on a case-by-case basis evaluating its specific merits rather than being categorically preempted without the benefit of an actual administrative record regarding the specific state regulation.

The scope of this proposal includes the types of state measures preempted as well as the period of preemption. EPA's assessment that our previous general conclusions regarding what types of measures must be preempted at the outset may no longer be supportable necessarily extends to the period of preemption imposed by our regulations. The current text at 40 CFR 1074.12(b) preempts the state control of in-use locomotives for the categories of regulations listed for a period of 133 percent of useful life of a new locomotive or engine. Since we now believe it is inappropriate to prejudge that all the listed types of measures would have such an effect, we likewise cannot say that the fixed period of preemption of such measures must still apply. EPA therefore proposes to remove the specified period of preemption in 40 CFR 1074.12(b). In place of this, the EPA would include evaluation of the temporal nature of any submitted state controls as part of its evaluation of any authorization request under 40 CFR 1074.101 through 1074.115.

D. What is EPA proposing?

We believe the current preemption language may impede California's exploration of regulations of non-new locomotives and locomotive engines beyond what is required by CAA section 209(e). To address this, EPA is proposing to make several revisions in part 1074, including sections 1074.10, 1074.12, and 1074.101.

In 40 CFR 1074.10, we propose to revise subsection (b) to contain text that is currently located in section 1074.12(a), and move the current text of subsection (b) into a new subsection (c). This would solely be a housekeeping measure, as no revisions to the content of the text or current subsection 1074.12(a) are proposed.

In 40 CFR 1074.12, we are proposing to delete 40 CFR 1074.12 in its entirety. We believe the removal of the explicit period of preemption as well as the listed categories of state control measures would signal that not all state regulations are intended to be preempted and would better align the scope of the regulation with the CAA. We seek comment on these proposed revisions and whether they adequately align our regulations with the CAA, and whether they achieve the intended purpose of not impeding California from pursuing state-level standards or control measures that may be considered for authorization according to the procedures outlined in 40 CFR 1074.101 through 1074.115. We note that under the proposal, California rules addressing non-new locomotives or engines would still need to go through the authorization process at 40 CFR 1074.101 through 1074.105, which would ensure compliance with the statutory authorization criteria: California's determination that its standards will be, in the aggregate, at least as protective of public health and welfare as otherwise applicable Federal standards is not arbitrary and capricious; Any opponents of the authorization have not met their burdens to demonstrate that California does not need such standards to meet compelling and extraordinary conditions; and Any such opponents have not demonstrated that such standards and accompanying enforcement procedures are not consistent with section 209 of the CAA (including section 209(e)(1)).[1038]

EPA notes that we would still have concerns related to authorization requests that included forms of state controls that would significantly affect the design or manufacture of a new locomotive or engine. However, EPA recognizes that significant advances in technology have occurred in the intervening years since 1998, along with innovative forms of regulations. Any state authorization application received by EPA would need to demonstrate why the submitted control measure would not significantly affect the design or manufacture of a new locomotive. As required by the CAA, the EPA would evaluate any such application on a case-by-case basis to determine if the controls may be authorized under section 209(e)(2).

Note that certain categories of potential state requirements, while not expressly preempted by section 209(e)(1) or EPA's regulations implementing section 209(e)(1), may be preempted if they would create a conflict with other provisions of the Act. For example, section 203(a)(3) of the Act prohibits tampering, and certain requirements to modify engines might constitute tampering. Analysis of such possible conflicts would be incorporated into the evaluation of EPA's review of an authorization request under 40 CFR 1074.101 through 1074.115.

In 40 CFR 1074.101, we propose a minor housekeeping edit to paragraph (a) of this section, to refer to the relocated text in 1074.10(b) that is being moved out of 1074.12.

None of the proposed changes to our preemption regulations would have any impact on the regulation of new locomotives or engines used in locomotives (including freshly built and remanufactured) under 40 CFR part 1033. We are not reopening any aspect of the regulation of new locomotives or engines, and any comments on these topics will be deemed beyond the scope.

XI. Statutory and Executive Order Reviews

Additional information about these statutes and Executive Orders can be found at *http://www.epa.gov/laws-regulations/laws-and-executive-orders.*

A. Executive Order 12866: Regulatory Planning and Review and Executive Order 13563: Improving Regulation and Regulatory Review

Under section 3(f)(1) of Executive Order 12866, this action is a significant regulatory action that was submitted to the Office of Management and Budget (OMB) for review. Any changes made in response to recommendations received as part of Executive Order 12866 review have been documented in the docket. EPA prepared an analysis of the potential costs and benefits associated with this action. This analysis, the draft ''Regulatory Impact Analysis—Greenhouse Gas Emissions Standards for Heavy-Duty Vehicles-Phase 3—Notice of Proposed Rulemaking,'' is available in the docket. The analyses contained in this document are also summarized in Sections II, IV, V, VI, VII, VIII and IX of this preamble.

[1038] 40 CFR 1074.105(b). Adopted at Part 85.1603(c)(1) in 1998 and recodified in Part 1074 as part of the Control of Emissions From Nonroad Spark-Ignition Engines and Equipment, October 8, 2008, 73 FR 59033.

B. Paperwork Reduction Act (PRA)

The information collection activities in this proposed rule have been submitted for approval to the Office of Management and Budget (OMB) under the PRA. The Information Collection Request (ICR) that EPA prepared has been assigned EPA ICR Number 2734.1. You can find a copy of the Supporting Statement in the docket for this rule, and it is briefly summarized here.

This proposed rulemaking consists of targeted updates to the existing GHG emission standards for heavy-duty vehicles beginning with MY 2027 in consideration of zero-emission technology. The information collection activities for EPA's Phase 2 GHG program would not change as a result of this proposed rule, although manufacturers would experience a cost associated with reviewing the new requirements.

- *Respondents/affected entities:* Manufacturers of heavy-duty onroad vehicles.
- *Respondent's obligation to respond:* Regulated entities must respond to the collection if they wish to sell their products in the United States, as prescribed by CAA section 203(a). Participation in some programs is voluntary; but once a manufacturer has elected to participate, it must submit the required information.
- *Estimated number of respondents:* Approximately 77 heavy-duty vehicle manufacturers.
- *Frequency of response:* One-time burden associated with reviewing the new requirements for all manufacturers; for EV manufacturers, one-time burden associated with new battery health monitor provisions, warranty reporting requirements, and associated revisions to owners manuals
- *Total estimated burden:* 7,411 hours. Burden is defined at 5 CFR 1320.03(b)
- *Total estimated cost:* $1.622 million; includes an estimated $936,500 maintenance and operational costs.

An agency may not conduct or sponsor, and a person is not required to respond to, a collection of information unless it displays a currently valid OMB control number. The OMB control numbers for EPA's regulations in 40 CFR are listed in 40 CFR part 9.

Submit your comments on the Agency's need for this information, the accuracy of the provided burden estimates and any suggested methods for minimizing respondent burden to EPA using the docket identified at the beginning of this rule. You may also send your ICR-related comments to OMB's Office of Information and Regulatory Affairs using the interface at *www.reginfo.gov/public/do/PRAMain*. Find this particular information collection by selecting ''Currently under Review—Open''. Since OMB is required to make a decision concerning the ICR between 30 and 60 days after receipt, OMB must receive comments no later than June 26, 2023. The EPA will respond to any ICR-related comments in the final rule.

C. Regulatory Flexibility Act (RFA)

I certify that this action will not have a significant economic impact on a substantial number of small entities under the RFA. As explained elsewhere in this preamble, EPA is proposing to exempt small entities from the proposed revisions to EPA's Phase 2 GHG requirements for MY 2027 and the proposed additional GHG requirements for MYs 2028 through 2032 and later. Small EV manufacturers would be subject to new battery health monitor provisions and warranty provisions, which include making associated revisions to owners manuals. There are 10 small companies that would be affected by the proposal. The estimated burden is not expected to exceed 3 percent of annual revenue for any small entity, and is expected to be between 1 and 3 percent of annual revenue for only one company. We have therefore concluded that this action will have minimal impact on small entities within the regulated industries. More information concerning the small entities and our decision is presented in Chapter 9 of the draft RIA.

D. Unfunded Mandates Reform Act (UMRA)

This proposed rule contains no Federal mandates under UMRA, 2 U.S.C. 1531–1538, for State, local, or Tribal governments. The proposed rule would impose no enforceable duty on any State, local or Tribal government. This proposed rule would contain a Federal mandate under UMRA that may result in expenditures of $100 million or more for the private sector in any one year. Accordingly, the costs and benefits associated with the proposed rule are discussed in Section VIII and in the draft RIA, which are in the docket for this rule.

This action is not subject to the requirements of section 203 of UMRA because it contains no regulatory requirements that might significantly or uniquely affect small governments.

E. Executive Order 13132: Federalism

The action we are proposing for HD Phase 3 CO_2 emission standards and related regulations does not have federalism implications. The proposed HD Phase 3 CO_2 emission standards will not have substantial direct effects on the states, on the relationship between the national government and the states, or on the distribution of power and responsibilities among the various levels of government.

The action we are proposing with regard to preemption of State control of air pollutant emissions from new locomotives and new engines used in locomotives (described in Section X), however, does have federalism implications because the proposed revisions to part 1074 involve existing regulations that preempt State law under CAA section 209(e)(1). This action proposes revisions to current regulatory provisions in order to better align EPA's rules with CAA section 209(e)'s statutory requirements. Today's action proposes to remove regulatory language that extended the preemption period beyond the point at which locomotives and engines are new. In this rule, EPA proposes to revise our locomotive preemption regulations to better align with precise language Congress provided in section 209(e) and the Congressional directive to EPA to implement the prohibition of state regulation of new locomotives and new engines used in locomotives while ensuring that states are not impeded from adopting programs as allowed by the CAA to address the contribution of air pollutant emissions from non-new locomotives and engines to their air quality issues. EPA consulted with representatives of various State and local governments in developing this proposed rule. We met with representatives from the National Association of State Energy Officials, the National Association of Clean Air Agencies, the Northeast States for Coordinated Air Use Management, the Ozone Transport Commission, and the Association of Air Pollution Control Agencies in a joint meeting on April 21, 2022. We met with representatives from CARB periodically from September to December 2022, and we met with representatives from the National Association of Clean Air Agencies, the Northeast States for Coordinated Air Use Management, and the Ozone Transport Commission in a joint meeting on December 13, 2022. In the spirit of Executive Order 13132, and consistent with EPA policy to promote communications between EPA and State and local governments, EPA specifically solicits comment on this proposed rule revision from State and local officials.

F. Executive Order 13175: Consultation and Coordination With Indian Tribal Governments

This action does not have Tribal implications as specified in Executive Order 13175. Thus, Executive Order 13175 does not apply to this action.

This action does not have substantial direct effects on one or more Indian tribes, on the relationship between the Federal Government and Indian tribes, or on the distribution of power and responsibilities between the Federal Government and Indian tribes. However, EPA plans to continue engaging with Tribal stakeholders in the development of this rulemaking by offering a Tribal workshop and offering government-to-government consultation upon request.

G. Executive Order 13045: Protection of Children From Environmental Health and Safety Risks

This action is subject to Executive Order 13045 because it is a significant regulatory action under section 3(f)(1) of Executive Order 12866, and EPA believes that the environmental health risks or safety risks of the pollutants addressed by this action may have a disproportionate effect on children. The 2021 Policy on Children's Health also applies to this action.[1039] Accordingly, we have evaluated the environmental health or safety effects of air pollutants affected by the proposed program on children. The results of this evaluation are described in Section VI of the preamble and Chapter 5 of the DRIA. The protection offered by these standards may be especially important for children because childhood represents a life stage associated with increased susceptibility to air pollutant-related health effects.

This proposed rule would reduce emissions of GHGs, which would reduce the effects of climate change on children. GHGs contribute to climate change and the GHG emissions reductions resulting from implementation of this proposed rule would further improve children's health. The assessment literature cited in EPA's 2009 and 2016 Endangerment Findings concluded that certain populations and life stages, including children, the elderly, and the poor, are most vulnerable to climate-related health effects. The assessment literature since 2016 strengthens these conclusions by providing more detailed findings regarding these groups' vulnerabilities and the projected impacts they may experience. These assessments describe how children's unique physiological and developmental factors contribute to making them particularly vulnerable to climate change. Impacts to children are expected from heat waves, air pollution, infectious and waterborne illnesses, and mental health effects resulting from extreme weather events. In addition, children are among those especially susceptible to most allergic diseases, as well as health effects associated with heat waves, storms, and floods. Additional health concerns may arise in low-income households, especially those with children, if climate change reduces food availability and increases prices, leading to food insecurity within households. More detailed information on the impacts of climate change to human health and welfare is provided in Section VI.A of this preamble.

Children make up a substantial fraction of the U.S. population, and often have unique factors that contribute to their increased risk of experiencing a health effect from exposures to ambient air pollutants because of their continuous growth and development. Children are more susceptible than adults to many air pollutants because they have (1) a developing respiratory system, (2) increased ventilation rates relative to body mass compared with adults, (3) an increased proportion of oral breathing, particularly in boys, relative to adults, and (4) behaviors that increase chances for exposure. Even before birth, the developing fetus may be exposed to air pollutants through the mother that affect development and permanently harm the individual when the mother is exposed.

In addition to reducing GHGs, this proposed rule would also reduce onroad emissions of criteria pollutants and air toxics. Section V of this preamble presents the estimated onroad emissions reductions from the proposed rule. Certain motor vehicle emissions present greater risks to children. Early lifestages (*e.g.,* children) are thought to be more susceptible to tumor development than adults when exposed to carcinogenic chemicals that act through a mutagenic mode of action.[1040] Exposure at a young age to these carcinogens could lead to a higher risk of developing cancer later in life. Chapter 5.2.8 of the DRIA describes a systematic review and meta-analysis conducted by the U.S. Centers for Disease Control and Prevention that reported a positive association between proximity to traffic and the risk of leukemia in children.

The adverse effects of individual air pollutants may be more severe for children, particularly the youngest age groups, than adults. As described in Section VI.B of this preamble and Chapter 5 of the DRIA, the Integrated Science Assessments for a number of pollutants affected by this rule, including those for SO_2, NO2, PM, ozone and CO, describe children as a group with greater susceptibility. Also, Section VI.B of this preamble and Chapter 5 of the DRIA discuss a number of childhood health outcomes associated with proximity to roadways, including evidence for exacerbation of asthma symptoms and suggestive evidence for new onset asthma.

There is substantial evidence that people who live or attend school near major roadways are more likely to be people of color, Hispanic ethnicity, and/or low socioeconomic status. Within these highly exposed groups, children's exposure and susceptibility to health effects is greater than adults due to school-related and seasonal activities, behavior, and physiological factors.

Children are not expected to experience greater ambient concentrations of air pollutants than the general population. However, because of their greater susceptibility to air pollution, including the impacts of a changing climate, and their increased time spent outdoors, it is likely that the emissions reductions associated with the proposed standards would have particular benefits for children's health.

H. Executive Order 13211: Actions Concerning Regulations That Significantly Affect Energy Supply, Distribution, or Use

This action is not a ''significant energy action'' because it is not likely to have a significant adverse effect on the supply, distribution, or use of energy. EPA has outlined the energy effects in Section VI of this preamble and Chapter 5 of the draft RIA, which is available in the docket for this action and is briefly summarized here.

This action proposes to reduce CO_2 emissions from heavy-duty vehicles under revised GHG standards, which would result in significant reductions in the consumption of petroleum, would achieve energy security benefits, and would have no adverse energy effects. Because the GHG emission standards result in fuel savings, this rule encourages more efficient use of fuels. Section VI.F of this preamble describes our projected fuel savings due to the proposed standards.

[1039] U.S. Environmental Protection Agency (2021). 2021 Policy on Children's Health. Washington, DC. *https://www.epa.gov/system/files/documents/2021-10/2021-policy-on-childrens-health.pdf.*

[1040] U.S. Environmental Protection Agency. (2005). Supplemental guidance for assessing susceptibility from early-life exposure to carcinogens. Washington, DC: Risk Assessment Forum. EPA/630/R–03/003F. *https://www3.epa.gov/airtoxics/childrens_supplement_final.pdf.*

I. National Technology Transfer and Advancement Act (NTTAA) and 1 CFR Part 51

This rulemaking involves technical standards. Except for the standards discussed in this Section XI.I, the standards included in the regulatory text as incorporated by reference were all previously approved for IBR and no change is included in this action.

In accordance with the requirements of 1 CFR 51.5, we are proposing to incorporate by reference the use of standards and test methods from the United Nations. The referenced standards and test methods may be obtained from the UN Economic Commission for Europe, Information Service at Palais des Nations, CH–1211 Geneva 10, Switzerland; *unece_info@un.org*; *www.unece.org*. We are incorporating by reference the following UN Economic Commission for Europe document:

Standard or test method	Regulation	Summary
Addendum 22: United Nations Global Technical Regulation No. 22, United Nations Global Technical Regulation on In-vehicle Battery Durability for Electrified Vehicles, Adopted April 14, 2022.	40 CFR 1037.115 and 1037.810	GTR 22 establishes design protocols and procedures for measuring durability and performance for batteries used with electric vehicles and plug-in hybrid-electric vehicles.

J. Executive Order 12898: Federal Actions To Address Environmental Justice in Minority Populations and Low-Income Populations

Executive Order 12898 (59 FR 7629, February 16, 1994) directs Federal agencies, to the greatest extent practicable and permitted by law, to make environmental justice part of their mission by identifying and addressing, as appropriate, disproportionately high and adverse human health or environmental effects of their programs, policies, and activities on minority populations (people of color and/or indigenous peoples) and low-income populations.

EPA believes that the human health or environmental conditions that exist prior to this action result in or have the potential to result in disproportionate and adverse human health or environmental effects on people of color, low-income populations and/or indigenous peoples. EPA provides a summary of the evidence for potentially disproportionate and adverse effects among people of color and low-income populations in Section VI.D of the preamble for this rule.

EPA believes that this action is likely to reduce existing disproportionate and adverse effects on people of color, low-income populations and/or indigenous peoples.

Section VI.D.1 discusses the environmental justice issues associated with climate change. People of color, low-income populations and/or indigenous peoples may be especially vulnerable to the impacts of climate change. The GHG emission reductions from this proposal would contribute to efforts to reduce the probability of severe impacts related to climate change.

In addition to reducing GHGs, this proposed rule would also reduce onroad emissions of criteria pollutants and air toxics. Section V of this preamble presents the estimated impacts from the proposed rule on onroad and EGU emissions. These non-GHG emission reductions from vehicles would improve air quality for the people who reside in close proximity to major roadways and who are disproportionately represented by people of color and people with low income, as described in Section VI.D.2 of this preamble. We expect that increases in criteria and toxic pollutant emissions from EGUs and reductions in petroleum-sector emissions could lead to changes in exposure to these pollutants for people living in the communities near these facilities. Analyses of communities in close proximity to these sources (such as EGUs and refineries) have found that a higher percentage of communities of color and low-income communities live near these sources when compared to national averages.

EPA is additionally identifying and addressing environmental justice concerns by providing fair treatment and meaningful involvement with Environment Justice groups in developing this proposed action and soliciting input for this notice of proposed rulemaking.

The information supporting this Executive Order review is contained in Section VI.D of the preamble for this rule, and all supporting documents have been placed in the public docket for this action.

XII. Statutory Authority and Legal Provisions

Statutory authority for the proposed GHG standards is found in CAA section 202(a)(1)–(2), 42 U.S.C. 7521 (a)(1)–(2), which requires EPA to establish standards applicable to emissions of air pollutants from new motor vehicles and engines which cause or contribute to air pollution which may reasonably be anticipated to endanger public health or welfare. Statutory authority for this proposed rule overall is found at 42 U.S.C. 7401–7675.

List of Subjects

40 CFR Part 1036

Environmental protection, Administrative practice and procedure, Air pollution control, Confidential business information, Greenhouse gases, Incorporation by reference, Labeling, Motor vehicle pollution, Reporting and recordkeeping requirements, Warranties.

40 CFR Part 1037

Environmental protection, Administrative practice and procedure, Air pollution control, Confidential business information, Incorporation by reference, Labeling, Motor vehicle pollution, Reporting and recordkeeping requirements, Warranties.

40 CFR Part 1054

Environmental protection, Administrative practice and procedure, Air pollution control, Confidential business information, Imports, Labeling, Penalties, Reporting and recordkeeping requirements, Warranties.

40 CFR Part 1065

Environmental protection, Administrative practice and procedure, Air pollution control, Incorporation by reference, Reporting and recordkeeping requirements, Research.

40 CFR Part 1074

Environmental protection, Administrative practice and procedure, Air pollution control, Locomotives, Nonroad engines, Scope of preemption.

Michael S. Regan,

Administrator.

For the reasons set out in the preamble, we are proposing to amend title 40, chapter I of the Code of Federal Regulations as set forth below.

PART 1036—CONTROL OF EMISSIONS FROM NEW AND IN-USE HEAVY-DUTY HIGHWAY ENGINES

■ 1. The authority citation for part 1036 continues to read as follows:

Authority: 42 U.S.C. 7401–7671q.

■ 2. Amend § 1036.101 by revising the introductory text and paragraph (a)(1) to read as follows:

§ 1036.101 Overview of exhaust emission standards.

This part contains standards and other regulations applicable to the emission of the air pollutant defined as the aggregate group of six greenhouse gases: carbon dioxide, nitrous oxide, methane, hydrofluorocarbons, perfluorocarbons, and sulfur hexafluoride.

(a) * * *

(1) Criteria pollutant standards for NO_X, HC, PM, and CO apply as described in § 1036.104. These pollutants are sometimes described collectively as ''criteria pollutants'' because they are either criteria pollutants under the Clean Air Act or precursors to the criteria pollutants ozone and PM.

* * * * *

§ 1036.104— [Amended]

■ 3. Amend § 1036.104 by removing paragraph (c)(2)(iii).

■ 4. Amend § 1036.108 by revising paragraphs (a)(1)(iii) introductory text and (e) to read as follows:

§ 1036.108 Greenhouse gas emission standards—CO_2, CH_4, and N_2O.

* * * * *

(a) * * *

(1) * * *

(iii) The following Phase 2 and Phase 3 CO_2 standards apply for compression-ignition engines and all Heavy HDE (in g/hp·hr):

* * * * *

(e) Applicability for testing. The emission standards in this subpart apply as specified in this paragraph (e) to all duty-cycle testing (according to the applicable test cycles) of testable configurations, including certification, selective enforcement audits, and in-use testing. The CO_2 FCLs serve as the CO_2 emission standards for the engine family with respect to certification and confirmatory testing instead of the standards specified in paragraph (a)(1) of this section. The FELs serve as the emission standards for the engine family with respect to all other duty-cycle testing. See §§ 1036.235 and 1036.241 to determine which engine configurations within the engine family are subject to testing. Note that engine fuel maps and powertrain test results also serve as standards as described in §§ 1036.535, 1036.540, 1036.545, and 1036.630.

■ 5. Amend § 1036.110 by revising paragraphs (b)(6), (b)(9) introductory text, (b)(11)(ii) and (c)(1) to read as follows:

§ 1036.110 Diagnostic controls.

* * * * *

(b) * * *

(6) The provisions related to verification of in-use compliance in 13 CCR 1971.1(l)(4) do not apply. The provisions related to manufacturer self-testing in 13 CCR 1971.5(c) also do not apply.

* * * * *

(9) Design compression-ignition engines to make the following additional data-stream signals available on demand with a generic scan tool according to 13 CCR 1971.1(h)(4.2), if the engine is so equipped with the relevant components and OBD monitoring is required for those components:

* * * * *

(11) * * *

(ii) Send us results from any testing you performed for certifying engine families (including equivalent engine families) with the California Air Resources Board, including the results of any testing performed under 13 CCR 1971.1(l) for verification of in-use compliance and 13 CCR 1971.5(c) for manufacturer self-testing within the deadlines set out in 13 CCR 1971.1 and 1971.5.

* * * * *

(c) * * *

(1) For inducements specified in § 1036.111 and any other AECD that derates engine output related to SCR or DPF systems, indicate the fault code for the detected problem, a description of the fault code, and the current speed restriction. For inducement faults under § 1036.111, identify whether the fault condition is for DEF level, DEF quality, or tampering; for other faults, identify whether the fault condition is related to SCR or DPF systems. If there are additional derate stages, also indicate the next speed restriction and the time remaining until starting the next restriction. If the derate involves something other than restricting vehicle speed, such as a torque derate, adjust the information to correctly identify any current and pending restrictions.

* * * * *

■ 6. Amend § 1036.111 by revising paragraphs (a)(2), (b) introductory text, (d), and (e) to read as follows:

§ 1036.111 Inducements related to SCR.

* * * * *

(a) * * *

(2) The provisions of this section apply differently based on an individual vehicle's speed history. A vehicle's speed category is based on the OBD system's recorded value for average speed for the preceding 30 hours of non-idle engine operation. The vehicle speed category applies at the point that the engine first detects an inducement triggering condition identified under paragraph (b) of this section and continues to apply until the inducement triggering condition is fully resolved as specified in paragraph (e) of this section. Non-idle engine operation includes all operating conditions except those that qualify as idle based on OBD system controls as specified in 13 CCR 1971.1(h)(5.4.10). Apply speed derates based on the following categories:

TABLE 1 TO PARAGRAPH (a)(2) OF § 1036.111—VEHICLE CATEGORIES

Vehicle category [a]	Average speed (mi/hr)
Low-speed	speed <15.
Medium-speed	15< speed <25.
High-speed	speed >25.

[a] A vehicle is presumed to be a high-speed vehicle if it has not yet logged 30 hours of non-idle operation.

* * * * *

(b) Inducement triggering conditions. Create derate strategies that monitor for and trigger an inducement based on the following conditions:

* * * * *

(d) Derate schedule. Engines must follow the derate schedule described in this paragraph (d) if the engine detects an inducement triggering condition identified in paragraph (b) of this section. The derate takes the form of a maximum drive speed for the vehicle. This maximum drive speed decreases over time based on hours of non-idle engine operation without regard to engine starting.

(1) Apply speed-limiting derates according to the following schedule:

TABLE 2 TO PARAGRAPH (d)(1) OF § 1036.111—DERATE SCHEDULE FOR DETECTED INDUCEMENT TRIGGERING CONDITIONS [a]

High-speed vehicles		Medium-speed vehicles		Low-speed vehicles	
Hours of non-idle engine operation	Maximum speed (mi/hr)	Hours of non-idle engine operation	Maximum speed (mi/hr)	Hours of non-idle engine operation	Maximum speed (mi/hr)
0	65	0	55	0	45
6	60	6	50	5	40
12	55	12	45	10	35
20	50	45	40	30	25
86	45	70	35		
119	40	90	25		
144	35				
164	25				

[a]Hours start counting when the engine detects an inducement triggering condition specified in paragraph (b) of this section. For DEF supply, you may program the engine to reset the timer to three hours when the engine detects an empty DEF tank.

(2) You may design and produce engines that will be installed in motorcoaches with an alternative derate schedule that starts with a 65 mi/hr derate when an inducement triggering condition is first detected, steps down to 50 mi/hr after 80 hours, and concludes with a final derate speed of 25 mi/hr after 180 hours of non-idle operation.

(e) *Deactivating derates.* Program the engine to deactivate derates as follows:

(1) Evaluate whether the detected inducement triggering condition continues to apply. Deactivate derates if the engine confirms that the detected inducement triggering condition is resolved.

(2) Allow a generic scan tool to deactivate inducement triggering codes while the vehicle is not in motion.

(3) Treat any detected inducement triggering condition that recurs within 40 hours of engine operation as the same detected inducement triggering condition, which would restart the derate at the same point in the derate schedule that the system last deactivated the derate.

■ 7. Amend § 1036.120 by revising paragraph (c) to read as follows:

§ 1036.120 Emission-related warranty requirements.

* * * * *

(c) *Components covered.* The emission-related warranty covers all components listed in 40 CFR part 1068, appendix A, and components from any other system you develop to control emissions. Note that this includes hybrid system components when a manufacturer's certified configuration includes hybrid system components. The emission-related warranty covers any components, regardless of the company that produced them, that are the original components or the same design as components from the certified configuration.

* * * * *

■ 8. Amend § 1036.125 by revising paragraph (h)(8)(iii) to read as follows:

§ 1036.125 Maintenance instructions and allowable maintenance.

* * * * *

(h) * * *

(8) * * *

(iii) A description of the three types of SCR-related derates (DEF level, DEF quality and tampering) and that further information on the inducement cause (*e.g.,* trouble codes) is available using the OBD system.

* * * * *

■ 9. Amend § 1036.150 by:

■ a. Revising paragraph (d);

■ b. Adding paragraph (f);

■ c. Revising paragraphs (j), and (k); and

■ d. Adding paragraph (aa).

The additions and revisions read as follows:

§ 1036.150 Interim provisions.

* * * * *

(d) *Small manufacturers.* The greenhouse gas standards of this part apply on a delayed schedule for manufacturers meeting the small business criteria specified in 13 CFR 121.201. Apply the small business criteria for NAICS code 336310 for engine manufacturers with respect to gasoline-fueled engines and 333618 for engine manufacturers with respect to other engines; the employee limits apply to the total number employees together for affiliated companies. Qualifying small manufacturers are not subject to the greenhouse gas emission standards in § 1036.108 for engines with a date of manufacture on or after November 14, 2011 but before January 1, 2022. In addition, qualifying small manufacturers producing engines that run on any fuel other than gasoline, E85, or diesel fuel may delay complying with every later greenhouse gas standard under this part by one model year; however, small manufacturers may generate emission credits only by certifying all their engine families within a given averaging set to standards that apply for the current model year. Note that engines not yet subject to standards must nevertheless supply fuel maps to vehicle manufacturers as described in paragraph (n) of this section. Note also that engines produced by small manufacturers are subject to criteria pollutant standards.

162 HEI Panel on the Health Effects of Long-Term Exposure to Traffic-Related Air Pollution (2022) Systematic review and meta-analysis of selected health effects of long-term exposure to traffic-related air pollution. Health Effects Institute Special Report 23. [Online at *https://www.healtheffects.org/publication/systematic-review-and-meta-analysis-selected-health-effects-long-term-exposure-traffic*] This more recent review focused on health outcomes related to birth effects, respiratory effects, cardiometabolic effects, and mortality.

* * * * *

(f) *Testing exemption for qualifying engines.* Tailpipe CO_2, CH_4, HC, and CO emissions from engines fueled with neat hydrogen are deemed to be zero. No fuel mapping, and no testing for CO_2, CH_4, HC, or CO is required under this part for these engines.

* * * * *

(j) *Alternate standards under 40 CFR part 86.* This paragraph (j) describes alternate emission standards that apply for model year 2023 and earlier loose engines certified under 40 CFR 86.1819–14(k)(8). The standards of § 1036.108 do not apply for these engines. The standards in this paragraph (j) apply for emissions measured with the engine installed in a complete vehicle

consistent with the provisions of 40 CFR 86.1819–14(k)(8)(vi). The only requirements of this part that apply to these engines are those in this paragraph (j), §§ 1036.115 through 1036.135, 1036.535, and 1036.540.

(k) *Limited production volume allowance under ABT*. You may produce a limited number of Heavy HDE that continue to meet the standards that applied under 40 CFR 86.007–11 in model years 2027 through 2029. The maximum number of engines you may produce under this limited production allowance is 5 percent of the annual average of your actual production volume of Heavy HDE in model years 2023–2025 for calculating emission credits under § 1036.705. Engine certification under this paragraph (k) is subject to the following conditions and requirements:

* * * * *

(aa) *Correcting credit calculations*. If you notify us by October 1, 2024 that errors mistakenly decreased your balance of emission credits for 2020 or any earlier model years, you may correct the errors and recalculate the balance of emission credits after applying a 10 percent discount to the credit correction.

■ 10. Amend § 1036.205 by revising paragraph (v) to read as follows:

§ 1036.205 Requirements for an application for certification.

* * * * *

(v) Include good-faith estimates of U.S.-directed production volumes. Include a justification for the estimated production volumes if they are substantially different than actual production volumes in earlier years for similar models.

* * * * *

■ 11. Amend § 1036.240 by revising paragraph (c)(3) to read as follows:

§ 1036.240 Demonstrating compliance with criteria pollutant emission standards.

* * * * *

(c) * * *

(3) *Sawtooth and other nonlinear deterioration patterns*. The deterioration factors described in paragraphs (c)(1) and (2) of this section assume that the highest useful life emissions occur either at the end of useful life or at the low-hour test point. The provisions of this paragraph (c)(3) apply where good engineering judgment indicates that the highest useful life emissions will occur between these two points. For example, emissions may increase with service accumulation until a certain maintenance step is performed, then return to the low-hour emission levels and begin increasing again. Such a pattern may occur with battery-based hybrid engines or hybrid powertrains. Base deterioration factors for engines with such emission patterns on the difference between (or ratio of) the point at which the highest emissions occur and the low-hour test point. Note that this applies for maintenance-related deterioration only where we allow such critical emission-related maintenance.

* * * * *

■ 12. Amend § 1036.241 by revising paragraph (c)(3) to read as follows:

§ 1036.241 Demonstrating compliance with greenhouse gas emission standards.

* * * * *

(c) * * *

(3) *Sawtooth and other nonlinear deterioration patterns*. The deterioration factors described in paragraphs (c)(1) and (2) of this section assume that the highest useful life emissions occur either at the end of useful life or at the low-hour test point. The provisions of this paragraph (c)(3) apply where good engineering judgment indicates that the highest useful life emissions will occur between these two points. For example, emissions may increase with service accumulation until a certain maintenance step is performed, then return to the low-hour emission levels and begin increasing again. Such a pattern may occur with battery-based hybrid engines or hybrid powertrains. Base deterioration factors for engines with such emission patterns on the difference between (or ratio of) the point at which the highest emissions occur and the low-hour test point. Note that this applies for maintenance-related deterioration only where we allow such critical emission-related maintenance.

* * * * *

■ 13. Amend § 1036.245 by revising paragraphs (c)(3) introductory text and (c)(3)(ii) introductory text to read as follows:

§ 1036.245 Deterioration factors for exhaust emission standards.

* * * * *

(c) * * *

(3) Perform service accumulation in the laboratory by operating the engine or hybrid powertrain repeatedly over one of the following test sequences, or a different test sequence that we approve in advance:

* * * * *

(ii) Duty-cycle sequence 2 is based on operating over the LLC and the vehicle-based duty cycles from 40 CFR part 1037. Select the vehicle subcategory and vehicle configuration from § 1036.540 or § 1036.545 with the highest reference cycle work for each vehicle-based duty cycle. Operate the engine as follows for duty-cycle sequence 2:

* * * * *

■ 14. Amend § 1036.250 by revising paragraph (a) to read as follows:

§ 1036.250 Reporting and recordkeeping for certification.

(a) By September 30 following the end of the model year, send the Designated Compliance Officer a report including the total U.S.-directed production volume of engines you produced in each engine family during the model year (based on information available at the time of the report). Report the production by serial number and engine configuration. You may combine this report with reports required under subpart H of this part. We may waive the reporting requirements of this paragraph (a) for small manufacturers.

* * * * *

■ 15. Amend § 1036.301 by revising paragraph (c) to read as follows:

§ 1036.301 Measurements related to GEM inputs in a selective enforcement audit.

* * * * *

(c) If your certification includes powertrain testing as specified in 40 CFR 1036.630, these selective enforcement audit provisions apply with respect to powertrain test results as specified in 40 CFR part 1037, subpart D, and § 1036.545. We may allow manufacturers to instead perform the engine-based testing to simulate the powertrain test as specified in 40 CFR 1037.551.

* * * * *

■ 16. Amend § 1036.405 by revising paragraphs (a)(1), (a)(3) and (d) to read as follows:

§ 1036.405 Overview of the manufacturer-run field-testing program.

(a) * * *

(1) We may select up to 25 percent of your engine families in any calendar year, calculated by dividing the number of engine families you certified in the model year corresponding to the calendar year by four and rounding to the nearest whole number. We will consider only engine families with annual U.S.-directed production volumes above 1,500 units in calculating the number of engine families subject to testing each calendar year under the annual 25 percent engine family limit. If you have only three or fewer families that each exceed an annual U.S.-directed production volume of 1,500 units, we may select one engine family per calendar year for testing.

* * * * *

(3) We will not select engine families for testing under this subpart from a

given model year if your total U.S.-directed production volume was less than 100 engines.

* * * * *

(d) You must complete all the required testing and reporting under this subpart (for all ten test engines, if applicable), within 18 months after we direct you to test a particular engine family. We will typically select engine families for testing and notify you in writing by June 30 of the applicable calendar year. If you request it, we may allow additional time to send us this information.

* * * * *

■ 17. Amend § 1036.420 by revising paragraph (a) to read as follows:

§ 1036.420 Pass criteria for individual engines.

* * * * *

(a) Determine the emission standard for each regulated pollutant for each bin by adding the following accuracy margins for PEMS to the off-cycle standards in § 1036.104(a)(3):

TABLE 1 TO PARAGRAPH (a) OF § 1036.420—ACCURACY MARGINS FOR IN-USE TESTING

	NO_X	HC	PM	CO
Bin 1	0.4 g/hr			
Bin 2	5 mg/hp·hr	10 mg/hp·hr	6 mg/hp·hr	0.25 g/hp·hr.

* * * * *

■ 18. Amend § 1036.501 by adding paragraph (g) to read as follows:

§ 1036.501 General testing provisions.

* * * * *

(g) For testing engines that use regenerative braking through the crankshaft to only power an electric heater for aftertreatment devices, you may use the fuel mapping procedure in § 1036.505(b)(1) or (2) and the nonhybrid engine testing procedures in §§ 1036.510, 1036.512, and 1036.514, as long as the recovered energy is less than 10 percent of the total positive work for each applicable transient duty cycle. Otherwise, use powertrain testing procedures specified for hybrid engines or hybrid powertrains to create fuel maps and measure emissions. For engines that power an electric heater with a battery, you must meet the requirements related to charge-sustaining operation as described in 40 CFR 1066.501.

■ 19. Amend § 1036.505 by revising paragraphs (a), (b) introductory text, and (b)(3) and (4) to read as follows:

§ 1036.505 Engine data and information to support vehicle certification.

* * * * *

(a) Identify engine make, model, fuel type, combustion type, engine family name, calibration identification, and engine displacement. Also identify whether the engines meet CO_2 standards for tractors, vocational vehicles, or both. When certifying vehicles with GEM, for any fuel type not identified in Table 1 of § 1036.550, select fuel type as diesel fuel for engines subject to compression-ignition standards, and select fuel type as gasoline for engines subject to spark-ignition standards.

(b) This paragraph (b) describes four different methods to generate engine fuel maps. For engines without hybrid components and for mild hybrid engines where you do not include hybrid components in the test, generate fuel maps using either paragraph (b)(1) or (2) of this section. For other hybrid engines, generate fuel maps using paragraph (b)(3) of this section. For hybrid powertrains and nonhybrid powertrains and for vehicles where the transmission is not automatic, automated manual, manual, or dual-clutch, generate fuel maps using paragraph (b)(4) of this section.

* * * * *

(3) Determine fuel consumption at idle as described in § 1036.535(c) and (d) and determine cycle-average engine fuel maps as described in § 1036.545, including cycle-average engine fuel maps for highway cruise cycles. Set up the test to apply accessory load for all operation by primary intended service class as described in the following table:

TABLE 1 TO PARAGRAPH (b)(3) OF § 1036.505—ACCESSORY LOAD

Primary intended service class	Power representing accessory load (kW)
Light HDV	1.5
Medium HDV	2.5
Heavy HDV	3.5

(4) Generate powertrain fuel maps as described in § 1036.545 instead of fuel mapping under § 1036.535 or § 1036.540. Note that the option in § 1036.545(b)(2) is allowed only for hybrid engine testing. Disable stop-start systems and automatic engine shutdown systems when conducting powertrain fuel map testing using § 1036.545.

* * * * *

■ 20. Amend § 1036.510 by:

■ a. Revising paragraphs (b)(2) introductory text, (b)(2)(vii), and (b)(2)(viii);

■ b. Removing paragraph (b)(2)(ix);

■ c. Revising paragraphs (c)(2)(i) introductory text, (d) introductory text, and (d)(1) and (2)(ii);

■ d. Removing the period in the heading in Figure 1 to paragraph (d)(4); and

■ e. Revising paragraphs (e), (f), and (g).

The revisions read as follows:

§ 1036.510 Supplemental Emission Test.

* * * * *

(b) * * *

(2) Test hybrid engines and hybrid powertrains as described in § 1036.545, except as specified in this paragraph (b)(2). Do not compensate the duty cycle for the distance driven as described in § 1036.545(g)(4). For hybrid engines, select the transmission from Table 1 of § 1036.540, substituting ''engine'' for ''vehicle'' and ''highway cruise cycle'' for ''SET''. Disregard duty cycles in § 1036.545(j). For cycles that begin with idle, leave the transmission in neutral or park for the full initial idle segment. Place the transmission into drive no earlier than 5 seconds before the first nonzero vehicle speed setpoint. For SET testing only, place the transmission into park or neutral when the cycle reaches the final idle segment. Use the following vehicle parameters instead of those in § 1036.545 to define the vehicle model in § 1036.545(a)(3):

* * * * *

(vii) Select a combination of drive axle ratio, ka, and a tire radius, r, that represents the worst-case combination of final gear ratio, drive axle ratio, and tire size for CO_2 expected for vehicles in which the hybrid engine or hybrid powertrain will be installed. This is typically the highest axle ratio and smallest tire radius. In selecting a drive axle ratio and tire radius, if representative, ensure that the maximum vehicle speed is no less than 60 mi/hr. Manufacturers may request preliminary approval for selected drive axle ratio and tire radius consistent with the provisions of § 1036.210. If the hybrid engine or hybrid powertrain is used exclusively in vehicles which are not capable of reaching 60 mi/hr, follow the provisions of 40 CFR 1066.425(b)(5).

Note for hybrid engines the final gear ratio can change depending on the duty-cycle, which will change the selection of the drive axle ratio and tire size. For example, § 1036.520 prescribes a different top gear ratio than paragraph (b)(2) of this section.

(viii) If you are certifying a hybrid engine, use a default transmission efficiency of 0.95 and create the vehicle model along with its default transmission shift strategy as described in § 1036.545(a)(3)(ii). Use the transmission parameters defined in Table 1 of § 1036.540 to determine transmission type and gear ratio. For Light HDV and Medium HDV, use the Light HDV and Medium HDV parameters for FTP, LLC, and SET duty cycles. For Tractors and Heavy HDVs, use the Tractor and Heavy HDV transient cycle parameters for the FTP and LLC duty cycles and the Tractor and Heavy HDV highway cruise cycle parameters for the SET duty cycle.

(c) * * *

(2) * * *

(i) Determine road grade at each point based on the continuous rated power of the hybrid powertrain, $P_{\text{contrated}}$, in kW determined in § 1036.520, the vehicle speed (A, B, or C) in mi/hr for a given SET mode, $v_{\text{ref[speed]}}$, and the specified road-grade coefficients using the following equation:

* * * * *

(d) Determine criteria pollutant emissions for plug-in hybrid engines and plug-in hybrid powertrains as follows:

(1) Precondition the engine or powertrain in charge-sustaining mode. Perform testing as described in this section for hybrid engines or hybrid powertrains in charge-sustaining mode.

(2) * * *

(ii) Operate the engine or powertrain continuously over repeated SET duty cycles until you reach the end-of-test criterion defined in 40 CFR 1066.501(a)(3).

* * * * *

(e) Determine greenhouse gas pollutant emissions for plug-in hybrid engines and plug-in hybrid powertrains using the emissions results for all the SET test intervals for both charge-depleting and charge-sustaining operation from paragraph (d)(2) of this section. Calculate the utility factor-weighted composite mass of emissions from the charge-depleting and charge-sustaining test results, $e_{\text{UF[emission]comp}}$, using the following equation:

$$e_{\text{UF[emission]comp}} = \sum_{i=1}^{N}\left[e_{\text{[emission][int]CDi}} \cdot \left(UF_{\text{DCD}i} - UF_{\text{DCD}i-1}\right)\right] + \sum_{j=1}^{M}\left[e_{\text{[emission][int]CSj}}\right] \cdot \frac{\left(1 - UF_{\text{RCD}}\right)}{M}$$

Eq. 1036.510-10

Where:

i = an indexing variable that represents one test interval.

N = total number of charge-depleting test intervals.

$e_{\text{[emission][int]CDi}}$ = total mass of emissions in the charge-depleting portion of the test for each test interval, i, starting from i = 1, including the test interval(s) from the transition phase.

UF_{DCDi} = utility factor fraction at distance $_{\text{DCD}i}$ from Eq. 1036.510–11, as determined by interpolating the approved utility factor curve for each test interval, i, starting from i = 1. Let UFDCD0 = 0.

j = an indexing variable that represents one test interval.

M = total number of charge-sustaining test intervals.

$e_{\text{[emission][int]CSj}}$ = total mass of emissions in the charge-sustaining portion of the test for each test interval, j, starting from j = 1.

UF_{RCD} = utility factor fraction at the full charge-depleting distance, RCD, as determined by interpolating the approved utility factor curve. RCD is the cumulative distance driven over N charge-depleting test intervals.

$$D_{\text{CD}i} = \sum_{k=1}^{Q}\left(v_k \cdot \Delta t\right)$$

Eq. 1036.510-11

Where:

k = an indexing variable that represents one recorded velocity value.

Q = total number of measurements over the test interval.

v = vehicle velocity at each time step, k, starting from k = 1. For tests completed under this section, v is the vehicle velocity from the vehicle model in § 1036.545. Note that this should include charge-depleting test intervals that start when the engine is not yet operating.

$\Delta t = 1/f_{\text{record}}$

frecord = the record rate.

Example using the charge-depletion test in Figure 1 of § 1036.510 for the SET for CO_2 emission determination:

Q = 24000

$v1$ = 0 mi/hr

$v2$ = 0.8 mi/hr

$v3$ = 1.1 mi/hr

f_{record} = 10 Hz

Δt = 1/10 Hz = 0.1 s

$$D_{\text{CD1}} = \sum_{k=1}^{24000}\left(0 \cdot 0.1 + 0.8 \cdot 0.1 + 1.1 \cdot 0.1 + v_{24000} \cdot \Delta t\right)$$

D_{CD1} = 30.1 mi

D_{CD2} = 30.0 mi

D_{CD3} = 30.1 mi

D_{CD4} = 30.2 mi

D_{CD5} = 30.1 mi

N = 5

UF_{DCD1} = 0.11

UF_{DCD2} = 0.23

UF_{DCD3} = 0.34

UF_{DCD4} = 0.45

UF_{DCD5} = 0.53

$e_{\text{CO2SETCD1}}$ = 0 g/hp·hr

$e_{\text{CO2SETCD2}}$ = 0 g/hp·hr

$e_{\text{CO2SETCD3}}$ = 0 g/hp·hr

$e_{\text{CO2SETCD4}}$ = 0 g/hp·hr

$e_{\text{CO2SETCD5}}$ = 174.4 g/hp·hr

M = 1

e_{CO2SETCS} = 428.1 g/hp·hr

UFRCD = 0.53

$$e_{\mathrm{UFCO2comp}} = [0 \cdot (0.11 - 0) + 0 \cdot (0.23 - 0.11) + 0 \cdot (0.34 - 0.23) + 0 \cdot (0.45 - 0.34) + 174.4 \cdot (0.53 - 0.45)] + 428.1 \cdot \frac{(1 - 0.53)}{1}$$

$e_{\mathrm{UFCO2comp}}$ = 215.2 g/hp·hr

(f) Calculate and evaluate cycle statistics as specified in 40 CFR 1065.514 for nonhybrid engines and § 1036.545 for hybrid engines and hybrid powertrains.

(g) Calculate the total emission mass of each constituent, *m,* over the test interval as described in 40 CFR 1065.650. For nonhybrid engines, calculate the total work, *W,* over the test interval as described in 40 CFR 1065.650(d). For hybrid engines and hybrid powertrains, calculate total positive work over the test interval using system power, Psys. Determine Psys, using § 1036.520(f).

■ 21. Amend § 1036.512 by:

■ a. Revising paragraphs (b)(2)(v), (c), (d) introductory text, (d)(1) and (2)(ii);

■ b. Removing the period in the heading in Figure 1 to paragraph (d)(4); and

■ c. Revising paragraph (f).

The revisions read as follows:

§ 1036.512 Federal Test Procedure.

* * * * *

(b) * * *

(2) * * *

(v) For plug-in hybrid engines and plug-in hybrid powertrains, test over the FTP in both charge-sustaining and charge-depleting operation for both criteria and greenhouse gas pollutant determination.

(c) The FTP duty cycle consists of an initial run through the test interval from a cold start as described in 40 CFR part 1065, subpart F, followed by a (20 ±1) minute hot soak with no engine operation, and then a final hot start run through the same transient test interval. Engine starting is part of both the cold-start and hot-start test intervals. Calculate the total emission mass of each constituent, *m,* over each test interval as described in 40 CFR 1065.650. For nonhybrid engines, calculate the total work, *W,* over the test interval as described in 40 CFR 1065.650(d). For hybrid engines and hybrid powertrains, calculate total positive work over each test interval using system power, $P_{\mathrm{sys.}}$ Determine P_{sys} using § 1036.520(f). For powertrains with automatic transmissions, account for and include the work produced by the engine from the CITT load. Calculate the official transient emission result from the cold-start and hot-start test intervals using the following equation:

$$Official\ transient\ emission\ result = \frac{cold\ start\ emissions\ (g) + 6 \cdot hot\ start\ emissions\ (g)}{cold\ start\ work\ (hp \cdot hr) + 6 \cdot hot\ start\ work\ (hp \cdot hr)}$$

Eq. 1036.512-1

(d) Determine criteria pollutant emissions for plug-in hybrid engines and plug-in hybrid powertrains as follows:

(1) Precondition the engine or powertrain in charge-sustaining mode. Perform testing as described in this section for hybrid engines or hybrid powertrains in charge-sustaining mode.

(2) * * *

(ii) Operate the engine or powertrain over one FTP duty cycle followed by alternating repeats of a 20-minute soak and a hot start test interval until you reach the end-of-test criteria defined in 40 CFR 1066.501.

* * * * *

(f) Calculate and evaluate cycle statistics as specified in 40 CFR 1065.514 for nonhybrid engines and § 1036.545 for hybrid engines and hybrid powertrains.

■ 22. Revise § 1036.514 to read as follows:

§ 1036.514 Low Load Cycle.

(a) Measure emissions using the transient Low Load Cycle (LLC) as described in this section to determine whether engines meet the LLC emission standards in § 1036.104.

(b) The LLC duty cycle is described in paragraph (d) of appendix B of this part. The following procedures apply differently for testing nonhybrid engines, hybrid engines, and hybrid powertrains:

(1) For nonhybrid engine testing, use the following procedures:

(i) Use the normalized speed and torque values for engine testing in the LLC duty cycle described in paragraph (d) of appendix B of this part.

(ii) Denormalize speed and torque values as described in 40 CFR 1065.512 and 1065.610 with the following additional requirements:

(A) The accessory load at idle described in paragraph (c) of this section must be applied using the optional declared idle power in 40 CFR 1065.510(f)(6). Use of the optional declared idle torque in 40 CFR 1065.510(f)(5)(iii) is not allowed and must be zero.

(B) Replace paragraph 40 CFR 1065.610(d)(3)(vi) with the following:

(*1*) For all other idle segments less than or equal to 200 s in length, set the reference speed and torque values to the warm-idle-in-drive values. This is to represent the transmission operating in drive.

(*2*) For idle segments more than 200 s in length, set the reference speed and torque values to the warm-idle-in-drive values for the first three seconds and the last three seconds of the idle segment. For all other points in the idle segment set the reference speed and torque values to the warm-idle-in-neutral values. This is to represent the transmission being manually shifted from drive to neutral near the beginning of the idle segment and back to drive near the end of the idle segment.

(iii) Calculate and evaluate cycle statistics as described in 40 CFR 1065.514. For testing spark-ignition gaseous-fueled engines with fuel delivery at a single-point in the intake manifold, you may apply the statistical criteria in Table 1 in this section to validate the LLC.

TABLE 1 TO PARAGRAPH (b)(1)(III) OF § 1036.514—STATISTICAL CRITERIA FOR VALIDATING DUTY CYCLES FOR GASEOUS-FUELED SPARK-IGNITION ENGINES [a]

Parameter	Speed	Torque	Power
Slope, a_1		0.800 ≤a1 ≤1.030	0.800 ≤a1 ≤1.030.
Absolute value of intercept, $\|a^0\|$			
Standard error of the estimate, *SEE*.			≤15% of maximum mapped power.
Coefficient of determination, r^2		≥0.650	≥0.650.

[a] Statistical criteria apply as specified in 40 CFR 1065.514 unless otherwise specified.

(2) Test hybrid engines and hybrid powertrains as described in § 1036.510(b)(2), with the following exceptions:

(i) Replace $P_{contrated}$ with $P_{rated,}$ which is the peak rated power determined in § 1036.520.

(ii) Keep the transmission in drive for all idle segments 200 seconds or less. For idle segments more than 200 seconds, leave the transmission in drive for the first 3 seconds of the idle segment, place the transmission in park or neutral immediately after the 3rd second in the idle segment, and shift the transmission into drive again 3 seconds before the end of the idle segment which is defined by the first nonzero vehicle speed setpoint.

(iii) For hybrid engines, select the transmission from Table 1 of § 1036.540, substituting ''engine'' for ''vehicle''.

(iv) For hybrid engines, you may request to change the GEM-generated engine reference torque at idle to better represent curb idle transmission torque (CITT).

(v) For plug-in hybrid engines and plug-in hybrid powertrains, determine criteria pollutant and greenhouse gas emissions as described in § 1036.510(d) and (e), replacing ''SET'' with ''LLC''.

(vi) Calculate and evaluate cycle statistics as specified in § 1036.545.

(c) Apply a vehicle accessory load for each idle point in the cycle based on a constant power. Use the power values in Table 2 to paragraph (c)(3) of this section based on primary intended service class. For nonhybrid engine testing, this is in addition to any applicable CITT. Additional provisions related to vehicle accessory load apply for the following special cases:

(1) For engines with stop-start technology, account for the loss of mechanical work due to the lack of any idle accessory load during engine-off conditions by determining the total loss of mechanical work from idle accessory load during all engine-off intervals over the entire test interval and distributing that work over the engine-on intervals of the entire test interval based on a calculated average power. You may determine the engine-off time by running practice cycles or through engineering analysis.

(2) Apply vehicle accessory power loads on idle points for hybrid powertrain testing where torque is measured at the axle input shaft or wheel hubs either as a mechanical or electrical load.

(3) Table 2 follows:

TABLE 2 TO PARAGRAPH (c)(3) OF § 1036.514—ACCESSORY LOAD AT IDLE

Primary intended service class	Power representing accessory load (kW)
Light HDE	1.5
Medium HDE	2.5
Heavy HDE	3.5

(d) The test sequence consists of preconditioning the engine by running one or two FTPs with each FTP followed by (20 ±1) minutes with no engine operation and a hot start run through the LLC. You may start any preconditioning FTP with a hot engine. Perform testing as described in 40 CFR 1065.530 for a test interval that includes engine starting. Calculate the total emission mass of each constituent, m, over the test interval as described in 40 CFR 1065.650. For nonhybrid engines, calculate the total work, W, over the test interval as described in 40 CFR 1065.650(d). For hybrid engines and hybrid powertrains, calculate total positive work over the test interval using system power, Psys. Determine Psys using § 1036.520(f). For powertrains with automatic transmissions, account for and include the work produced by the engine from the CITT load.

■ 23. Amend § 1036.520 by revising the introductory text, paragraphs (b) introductory text, (d)(2) and (3), (h), and (i)(2) to read as follows:

§ 1036.520 Determining power and vehicle speed values for powertrain testing.

This section describes how to determine the system peak power and continuous rated power of hybrid and nonhybrid powertrain systems and the vehicle speed for carrying out duty-cycle testing under this part and § 1036.545.

* * * * *

(b) Set up the powertrain test according to § 1036.545, with the following exceptions:

* * * * *

(d) * * *

(2) Set maximum driver demand for a full load acceleration at 6.0% road grade with an initial vehicle speed of 0 mi/hr, continuing for 268 seconds. You may decrease the road grade in the first 30 seconds or increase initial vehicle speed up to 5 mi/hr as needed to mitigate clutch slip.

(3) Linearly ramp the grade from 6.0% down to 0.0% over 300 seconds. Stop the test after the acceleration is less than 0.02 m/s^2.

* * * * *

(h) Determine rated power, Prated, as the maximum measured power from the data collected in paragraph (d)(2) of this section where the COV determined in paragraph (g) of this section is less than 2%.

(i) * * *

(2) For hybrid powertrains, Pcontrated is the maximum measured power from the data collected in paragraph (d)(3) of this section where the COV determined in paragraph (g) of this section is less than 2%.

* * * * *

■ 24. Amend § 1036.525 by revising the introductory text to read as follows:

§ 1036.525 Clean Idle test.

Measure emissions using the procedures described in this section to determine whether engines and hybrid powertrains meet the clean idle emission standards in § 1036.104(b). For plug-in hybrid engines and plug-in hybrid powertrains, perform the test with the hybrid function disabled.

* * * * *

■ 25. Amend § 1036.530 by adding paragraph (j) to read as follows:

§ 1036.530 Test procedures for off-cycle testing.

* * * * *

(j) *Fuel other than carbon-containing.* The following procedures apply for testing engines using at least one fuel that is not a carbon-containing fuel:

(1) Use the following equation to determine $m_{CO2,norm,testinterval}$ instead of Eq. 1036.530–2:

$$m_{CO2,norm,testinterval} = \frac{W_{testinterval}}{P_{max} \cdot t_{testinterval}}$$

Eq. 1036.530-6

Where:

$W_{testinterval}$ = total positive work over the test interval as determined in 40 CFR 1065.650.

P_{max} = the highest value of rated power for all the configurations included in the engine family.

$t_{testinterval}$ = duration of the test interval. Note that the nominal value is 300 seconds.

Example:

$W_{testinterval}$ = 8.95 hp·hr

P_{max} = 406.5 hp

$t_{testinterval}$ = 300.01 s = 0.08 hr

$$m_{CO2,norm,testinterval} = \frac{8.95}{406.5 \cdot 0.08}$$

$m_{CO2,norm,testinterval}$ = 0.2722

$m_{CO2,norm,testinterval}$ = 27.22%

(2) Determine off-cycle emissions quantities as follows:

(i) For engines subject to spark-ignition standards, use the following equation instead of Eq. 1036.530–3:

$$e_{[emissions],offcycle} = \frac{m_{[emission]}}{W_{testinterval}}$$

Eq. 1036.530-7

Where:

$m_{[emission]}$ = total emission mass for a given pollutant over the test interval as determined in paragraph (d)(2) of this section.

$W_{testinterval}$ = total positive work over the test interval as determined in 40 CFR 1065.650.

Example:

m_{NOx} = 1.337 g

$W_{testinterval}$ = 38.2 hp·hr

$$e_{NOx,offcycle} = \frac{1.337}{38.2}$$

$e_{NOx,offcycle}$ = 0.035 g/hp·hr

(ii) For engines subject to compression-ignition standards, use Eq. 1036.530–4 to determine the off-cycle emission quantity for bin 1.

(iii) For engines subject to compression-ignition standards, use the following equation instead of Eq. 1036.530–5 to determine the off-cycle emission quantity for bin 2:

$$e_{[emissions],offcycle,bin2} = \frac{\sum_{i=1}^{N} m_{[emission],testinterval,i}}{\sum_{i=1}^{N} W_{testinterval,i}}$$

Eq. 1036.530-8

Where:

i = an indexing variable that represents one 300 second test interval.

N = total number of 300 second test intervals in bin 2.

$m_{[emission],testinterval,i}$ = total emission mass for a given pollutant over the test interval i in bin 2 as determined in paragraph (d)(2) of this section.

$W_{testinterval,i}$ = total positive work over the test interval i in bin 2 as determined in 40 CFR 1065.650.

Example:

N = 15439

m_{NOx1} = 0.546 g

m_{NOx2} = 0.549 g

m_{NOx3} = 0.556 g

$W_{testinterval1}$ = 8.91 hp·hr

$W_{testinterval2}$ = 8.94 hp·hr

$W_{testinterval3}$ = 8.89 hp·hr

$$e_{NOx,offcycle,bin2} = \frac{\left(0.546 + 0.549 + 0.556\ldots + m_{NOx,testinterval,15439}\right)}{\left(8.91 + 8.94 + 8.89\ldots + W_{testinterval,15439}\right)}$$

$e_{NOx,offcycle,bin2}$ = 0.026 g/hp·hr

■ 26. Amend § 1036.535 by revising paragraphs (b)(1)(ii) introductory text, (b)(1)(ii)(B), (b)(1)(iii), and (b)(10) to read as follows:

§ 1036.535 Determining steady-state engine fuel maps and fuel consumption at idle.

* * * * *

(b) * * *

(1) * * *

(ii) Select the following required torque setpoints at each of the selected speed setpoints: zero (T = 0), maximum mapped torque, Tmax mapped, and eight (or more) equally spaced points between T = 0 and Tmax mapped. Select the maximum torque setpoint at each speed to conform to the torque map as follows:

* * * * *

(B) Select T_{max} at each speed setpoint as a single torque value to represent all

the default torque setpoints above the value determined in paragraph (b)(1)(ii)(A) of this section. All of the other default torque setpoints less than T_{max} at a given speed setpoint are required torque setpoints.

(iii) You may select any additional speed and torque setpoints consistent with good engineering judgment. For example you may need to select additional points if the engine's fuel consumption is nonlinear across the torque map. Avoid creating a problem with interpolation between narrowly spaced speed and torque setpoints near T_{max}. For each additional speed setpoint, we recommend including a torque setpoint of T_{max}; however, you may select torque setpoints that properly represent in-use operation. Increments for torque setpoints between these minimum and maximum values at an additional speed setpoint must be no more than one-ninth of $T_{max,mapped}$. Note that if the test points were added for the child rating, they should still be reported in the parent fuel map. We will test with at least as many points as you. If you add test points to meet testing requirements for child ratings, include those same test points as reported values for the parent fuel map. For our testing, we will use the same normalized speed and torque test points you use, and we may select additional test points.

* * * * *

(10) Correct the measured or calculated mean fuel mass flow rate, at each of the operating points to account for mass-specific net energy content as described in paragraph (e) of this section.

* * * * *

■ 27. Amend § 1036.540 by revising paragraph (b) to read as follows:

§ 1036.540 Determining cycle-average engine fuel maps.

* * * * *

(b) *General test provisions.* The following provisions apply for testing under this section:

(1) Measure NO_X emissions for each specified sampling period in grams. You may perform these measurements using a NO_X emission-measurement system that meets the requirements of 40 CFR part 1065, subpart J. Include these measured NO_X values any time you report to us your fuel-consumption values from testing under this section. If a system malfunction prevents you from measuring NO_X emissions during a test under this section but the test otherwise gives valid results, you may consider this a valid test and omit the NO_X emission measurements; however, we may require you to repeat the test if we determine that you inappropriately voided the test with respect to NO_X emission measurement.

(2) The provisions related to carbon balance error verification in § 1036.543 apply for all testing in this section. These procedures are optional, but we will perform carbon balance error verification for all testing under this section.

(3) Correct fuel mass to a mass-specific net energy content of a reference fuel as described in paragraph (d)(13) of this section.

(4) This section uses engine parameters and variables that are consistent with 40 CFR part 1065.

* * * * *

■ 28. Revise § 1036.543 to read as follows:

§ 1036.543 Carbon balance error verification.

The optional carbon balance error verification in 40 CFR 1065.543 compares independent assessments of the flow of carbon through the system (engine plus aftertreatment). This procedure applies for each individual interval in §§ 1036.535(b), (c), and (d), 1036.540, and 1036.545.

■ 29. Add § 1036.545 to read as follows:

§ 1036.545 Powertrain testing.

This section describes the procedure to measure fuel consumption and create engine fuel maps by testing a powertrain that includes an engine coupled with a transmission, drive axle, and hybrid components or any assembly with one or more of those hardware elements. Engine fuel maps are part of demonstrating compliance with Phase 2 and Phase 3 vehicle standards under 40 CFR part 1037; the powertrain test procedure in this section is one option for generating this fuel-mapping information as described in § 1036.505. Additionally, this powertrain test procedure is one option for certifying hybrid engines and hybrid powertrains to the engine standards in §§ 1036.104 and 1036.108.

(a) *General test provisions.* The following provisions apply broadly for testing under this section:

(1) Measure NO_X emissions as described in paragraph (k) of this section. Include these measured NO_X values any time you report to us your greenhouse gas emissions or fuel consumption values from testing under this section.

(2) The procedures of 40 CFR part 1065 apply for testing in this section except as specified. This section uses engine parameters and variables that are consistent with 40 CFR part 1065.

(3) Powertrain testing depends on models to calculate certain parameters. You can use the detailed equations in this section to create your own models, or use the GEM HIL model contained within GEM Phase 2, Version 4.0 (incorporated by reference, see § 1036.810) to simulate vehicle hardware elements as follows:

(i) Create driveline and vehicle models that calculate the angular speed setpoint for the test cell dynamometer, $_{fnref,dyno,}$ based on the torque measurement location. Use the detailed equations in paragraph (f) of this section, the GEM HIL model's driveline and vehicle submodels, or a combination of the equations and the submodels. You may use the GEM HIL model's transmission submodel in paragraph (f) of this section to simulate a transmission only if testing hybrid engines.

(ii) Create a driver model or use the GEM HIL model's driver submodel to simulate a human driver modulating the throttle and brake pedals to follow the test cycle as closely as possible.

(iii) Create a cycle-interpolation model or use the GEM HIL model's cycle submodel to interpolate the duty-cycles and feed the driver model the duty-cycle reference vehicle speed for each point in the duty-cycle.

(4) The powertrain test procedure in this section is designed to simulate operation of different vehicle configurations over specific duty cycles. See paragraphs (h) and (j) of this section.

(5) For each test run, record engine speed and torque as defined in 40 CFR 1065.915(d)(5) with a minimum sampling frequency of 1 Hz. These engine speed and torque values represent a duty cycle that can be used for separate testing with an engine mounted on an engine dynamometer under 40 CFR 1037.551, such as for a selective enforcement audit as described in 40 CFR 1037.301.

(6) For hybrid powertrains with no plug-in capability, correct for the net energy change of the energy storage device as described in 40 CFR 1066.501. For plug-in hybrid electric powertrains, follow 40 CFR 1066.501 to determine End-of-Test for charge-depleting operation. You must get our approval in advance for your utility factor curve; we will approve it if you can show that you created it, using good engineering judgment, from sufficient in-use data of vehicles in the same application as the vehicles in which the plug-in hybrid electric powertrain will be installed. You may use methodologies described in SAE J2841 to develop the utility factor curve.

(7) The provisions related to carbon balance error verification in § 1036.543 apply for all testing in this section. These procedures are optional if you are only performing direct or indirect fuel-flow measurement, but we will perform carbon balance error verification for all testing under this section.

(8) Do not apply accessory loads when conducting a powertrain test to generate inputs to GEM if torque is measured at the axle input shaft or wheel hubs.

(9) If you test a powertrain over the duty cycle specified in § 1036.514, control and apply the electrical accessory loads using one of the following systems:

(i) An alternator with dynamic electrical load control.

(ii) A load bank connected directly to the powertrain's electrical system.

(10) The following instruments are required with plug-in hybrid systems to determine required voltages and currents during testing and must be installed on the powertrain to measure these values during testing:

(i) Measure the voltage and current of the battery pack directly with a DC wideband power analyzer to determine power. Measure all current entering and leaving the battery pack. Do not measure voltage upstream of this measurement point. The maximum integration period for determining amp-hours is 0.05 seconds. The power analyzer must have an accuracy for measuring current and voltage of 1% of point or 0.3% of maximum, whichever is greater. The power analyzer must not be susceptible to offset errors while measuring current.

(ii) If safety considerations do not allow for measuring voltage, you may determine the voltage directly from the powertrain ECM.

(11) The following figure provides an overview of the steps involved in carrying out testing under this section:

Figure 1 to Paragraph (a)(11) of § 1036.545—Overview of Powertrain Testing

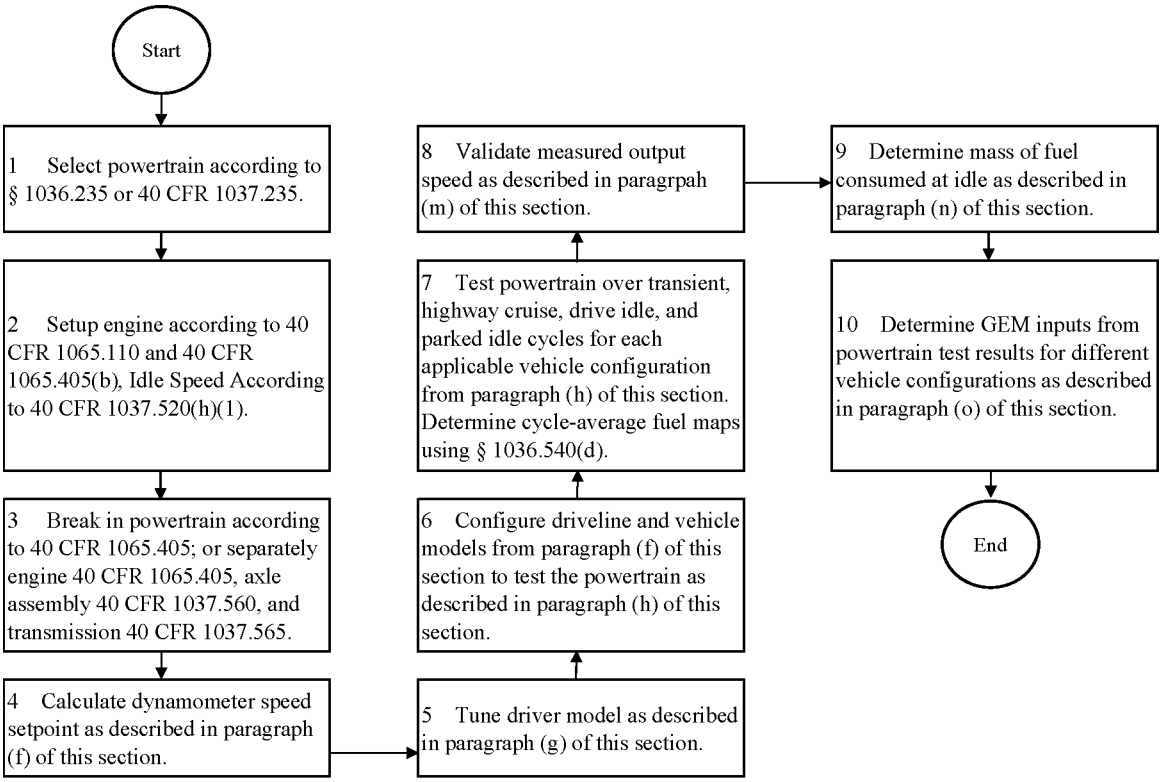

Duty Cycle Exceptions	Note
SET, FTP, LLC	1) Do not compensate the duty cycle for the distance driven in step 5 2) Disregard duty cycles in step 7. 3) For cycles that begin with idle, leave the transmission in neutral or park for the full initial idle segment. Place the transmission into drive no earlier than 5 seconds before the first nonzero vehicle speed setpoint. 4) Use the vehicle parameters in § 1036.505(b)(2)(i) to (ix) to define the vehicle model in § 1036.545(a)(3)
SET Specific	1) For SET testing only, place the transmission into park or neutral when the cycle reaches the final idle segment. 2) Select the transmission from Table 1 of § 1036.540, substituting “engine” for “vehicle” and “highway cruise cycle” for “SET”.
FTP Specific	1) Replace Pcontrated with Prated, which is the peak rated power determined in § 1036.527 2) Keep the transmission in drive for all idle segments after the initial idle segment 3) For hybrid engines, select the transmission from Table 1 of § 1036.540, substituting “engine” for “vehicle”. 4) For hybrid engines, you may request to change the engine-commanded torque at idle to better represent curb idle transmission torque (CITT)
LLC Specific	1) Replace Pcontrated with Prated, which is the peak rated power determined in § 1036.527. 2) Keep the transmission in drive for all idle segments 200 seconds or less. For idle segments more than 200 seconds, place the transmission in park or neutral at the start of the idle segment and place the transmission into drive again no earlier than 5 seconds before the first nonzero vehicle speed setpoint. 3) For hybrid engines, you may request to change the engine-commanded torque at idle to better represent curb idle transmission torque (CITT). 4) For plug-in hybrid engines and powertrains, determine criteria pollutant and greenhouse gas emissions as described in § 1036.505(d) and (e), replacing “SET” with “LLC”.

(b) *Test configuration.* Select a powertrain for testing as described in 40 CFR 1037.235 or § 1036.235 as applicable. Set up the engine according to 40 CFR 1065.110 and 40 CFR 1065.405(b). Set the engine's idle speed to idle speed defined in 40 CFR 1037.520(h)(1).

(1) The default test configuration consists of a powertrain with all components upstream of the axle. This involves connecting the powertrain's output shaft directly to the dynamometer or to a gear box with a fixed gear ratio and measuring torque at the axle input shaft. You may instead set up the dynamometer to connect at the wheel hubs and measure torque at that location. The preceding sentence may apply if your powertrain configuration requires it, such as for hybrid powertrains or if you want to represent the axle performance with powertrain test results. Alternately you may test the powertrain with a chassis dynamometer as long as you measure speed and torque at the powertrain's output shaft or wheel hubs.

(2) For testing hybrid engines, connect the engine's crankshaft directly to the dynamometer and measure torque at that location.

(c) *Powertrain temperatures during testing.* Cool the powertrain during testing so temperatures for oil, coolant, block, head, transmission, battery, and power electronics are within the manufacturer's expected ranges for normal operation. You may use electronic control module outputs to comply with this paragraph (c). You may use auxiliary coolers and fans.

(d) *Engine break in.* Break in the engine according to 40 CFR 1065.405, the axle assembly according to 40 CFR 1037.560, and the transmission according to 40 CFR 1037.565. You may instead break in the powertrain as a complete system using the engine break in procedure in 40 CFR 1065.405.

(e) *Dynamometer setup.* Set the dynamometer to operate in speed-control mode (or torque-control mode for hybrid engine testing at idle, including idle portions of transient duty cycles). Record data as described in 40 CFR 1065.202. Command and control the dynamometer speed at a minimum of 5 Hz, or 10 Hz for testing hybrid engines. Run the vehicle model to calculate the dynamometer setpoints at a rate of at least 100 Hz. If the dynamometer's command frequency is less than the vehicle model dynamometer setpoint frequency, subsample the calculated setpoints for commanding the dynamometer setpoints.

(f) *Driveline and vehicle model.* Use the GEM HIL model's driveline and vehicle submodels or the equations in this paragraph (f) to calculate the dynamometer speed setpoint, $f_{\mathrm{nref,dyno}}$, based on the torque measurement location. For all powertrains, configure GEM with the accessory load set to zero. For hybrid engines, configure GEM with the applicable accessory load as specified in §§ 1036.505 and 1036.514. For all powertrains and hybrid engines, configure GEM with the tire slip model disabled.

(1) *Driveline model with a transmission in hardware.* For testing with torque measurement at the axle input shaft or wheel hubs, calculate, fnref,dyno, using the GEM HIL model's driveline submodel or the following equation:

$$f_{\mathrm{nref}i,\mathrm{dyno}} = \frac{k_{\mathrm{a[speed]}} \cdot v_{\mathrm{ref}i}}{2 \cdot \pi \cdot r_{\mathrm{[speed]}}}$$

Eq. 1036.545-1

Where:

$k_{\mathrm{a[speed]}}$ = drive axle ratio as determined in paragraph (h) of this section. Set $k_{\mathrm{a[speed]}}$ equal to 1.0 if torque is measured at the wheel hubs.

$v_{\mathrm{ref}i}$ = simulated vehicle reference speed as calculated in paragraph (f)(3) of this section.

$r_{\mathrm{[speed]}}$ = tire radius as determined in paragraph (h) of this section.

(2) *Driveline model with a simulated transmission.* For testing with the torque measurement at the engine's crankshaft, $f_{\mathrm{nref,dyno}}$ is the dynamometer target speed from the GEM HIL model's transmission submodel. You may request our approval to change the transmission submodel, as long as the changes do not affect the gear selection logic. Before testing, initialize the transmission model with the engine's measured torque curve and the applicable steady-state fuel map from the GEM HIL model. You may request our approval to input your own steady-state fuel map. For example, this request for approval could include using a fuel map that represents the combined performance of the engine and hybrid components. Configure the torque converter to simulate neutral idle when using this procedure to generate engine fuel maps in § 1036.505 or to perform the Supplemental Emission Test (SET) testing under § 1036.510. You may change engine commanded torque at idle to better represent CITT for transient testing under § 1036.512. You may change the simulated engine inertia to match the inertia of the engine under test. We will evaluate your requests under this paragraph (f)(2) based on your demonstration that that the adjusted testing better represents in-use operation.

(i) The transmission submodel needs the following model inputs:

(A) Torque measured at the engine's crankshaft.

(B) Engine estimated torque determined from the electronic control module or by converting the instantaneous operator demand to an instantaneous torque in N·m.

(C) Dynamometer mode when idling (speed-control or torque-control).

(D) Measured engine speed when idling.

(E) Transmission output angular speed, fni,transmission, calculated as follows:

$$f_{\mathrm{n}i,\mathrm{transmission}} = \frac{k_{\mathrm{a[speed]}} \cdot v_{\mathrm{ref}i}}{2 \cdot \pi \cdot r_{\mathrm{[speed]}}}$$

Eq. 1036.545-2

Where:

$k_{\mathrm{a[speed]}}$ = drive axle ratio as determined in paragraph (h) of this section.

$v_{\mathrm{ref}i}$ = simulated vehicle reference speed as calculated in paragraph (f)(3) of this section.

$r_{\mathrm{[speed]}}$ = tire radius as determined in paragraph (h) of this section.

(ii) The transmission submodel generates the following model outputs:

(A) Dynamometer target speed.

(B) Dynamometer idle load.

(C) Transmission engine load limit.

(D) Engine speed target.

(3) *Vehicle model.* Calculate the simulated vehicle reference speed, $v_{\mathrm{ref}i}$, using the GEM HIL model's vehicle submodel or the equations in this paragraph (f)(3):

$$v_{\mathrm{ref}i} = \left(\frac{k_{\mathrm{a}} \cdot T_{i\text{-}1}}{r} \cdot (Eff_{\mathrm{axle}}) - \left(M \cdot g \cdot C_{\mathrm{rr}} \cdot \cos(\mathrm{atan}(G_{i\text{-}1})) + \frac{\rho \cdot C_{\mathrm{d}} A}{2} \cdot v_{\mathrm{ref},i\text{-}1}^{2} \right) - F_{\mathrm{brake},i\text{-}1} - F_{\mathrm{grade},i\text{-}1} \right) \cdot \frac{\Delta t_{i\text{-}1}}{M + M_{\mathrm{rotating}}} + v_{\mathrm{ref},i\text{-}1}$$

Eq. 1036.545-3

Where:

i = a time-based counter corresponding to each measurement during the sampling period.

Let $v_{\mathrm{ref1}} = 0$; start calculations at $i = 2$. A 10-minute sampling period will generally involve 60,000 measurements.

T = instantaneous measured torque at the axle input, measured at the wheel hubs, or simulated by the GEM HIL model's transmission submodel. For configurations with multiple torque measurements, for example when measuring torque at the wheel hubs, T is the sum of all torque measurements.

Eff_{axle} = axle efficiency. Use $Eff_{\mathrm{axle}} = 0.955$ for $T \geq 0$, and use $Eff_{\mathrm{axle}} = 1/0.955$ for $T < 0$. Use $Eff_{\mathrm{axle}} = 1.0$ if torque is measured at the wheel hubs.

M = vehicle mass for a vehicle class as determined in paragraph (h) of this section.

g = gravitational constant = 9.80665 m/s^2.

C_{rr} = coefficient of rolling resistance for a vehicle class as determined in paragraph (h) of this section.

G_{i-1} = the percent grade interpolated at distance, D_{i-1}, from the duty cycle in appendix D to this part corresponding to measurement (i–1).

$$D_{i\text{-}1} = \sum_{i=1}^{N} \left(v_{\mathrm{ref},i\text{-}1} \cdot \Delta t_{i\text{-}1} \right)$$

Eq. 1036.545-4

ρ = air density at reference conditions. Use ρ = 1.1845 kg/m^3.

$C_{\mathrm{d}}A$ = drag area for a vehicle class as determined in paragraph (h) of this section.

$F_{\mathrm{brake,i\text{-}1}}$ = instantaneous braking force applied by the driver model.

$$F_{\mathrm{grade},i\text{-}1} = M \cdot g \cdot \sin(\mathrm{atan}(G_{i\text{-}1}))$$

Eq. 1036.545-5

Δt = the time interval between measurements. For example, at 100 Hz, $\Delta t = 0.0100$ seconds.

M_{rotating} = inertial mass of rotating components. Let $M_{\mathrm{rotating}} = 340$ kg for vocational Light HDV or vocational Medium HDV. See paragraph (h) of this section for tractors and for vocational Heavy HDV.

(4) *Example.* The following example illustrates a calculation of $f_{\mathrm{nref,dyno}}$ using paragraph (f)(1) of this section where torque is measured at the axle input shaft. This example is for a vocational Light HDV or vocational Medium HDV with 6 speed automatic transmission at B speed (Test 4 in Table 1 to paragraph (h)(2)(ii) of this section).

$k_{aB} = 4.0$

$r_B = 0.399$ m

$T_{999} = 500.0$ N·m

$C_{rr} = 7.7$ N/kN $= 7.7 \cdot 10^{-3}$ N/N

$M = 11408$ kg

$C_dA = 5.4$ m^2

$G_{999} = 0.39$ % $= 0.0039$

$$D_{999} = \sum_{i=0}^{998}\left(19.99 \cdot 0.01 + 20.0 \cdot 0.01 + \ldots + v_{\mathrm{ref},998} \cdot \Delta t_{998}\right) = 1792 \text{ m}$$

$F_{brake,999} = 0$ N

$v_{ref,999} = 20.0$ m/s

$$F_{\mathrm{grade},999} = 11408 \cdot 9.81 \cdot \sin(\mathrm{atan}(0.0039)) = 436.5 \text{ N}$$

$\Delta t = 0.0100$ s

$M_{rotating} = 340$ kg

$$v_{\mathrm{ref1000}} = \left(\frac{4.0 \cdot 500.0}{0.399} \cdot (0.955) - \left(11408 \cdot 9.80665 \cdot 7.7 \cdot 10^{-3} \cdot cos(atan(0.0039)) + \frac{1.1845 \cdot 5.4}{2} \cdot 20.0^2\right) - 0 - 436.5\right) \cdot \frac{0.0100}{11408+340} + 20.0 v_{\mathrm{ref1000}}$$

$v_{ref1000} = 20.00189$ m/s

$$f_{\mathrm{nref1000,dyno}} = \frac{4.0 \cdot 20.00189}{2 \cdot 3.14 \cdot 0.399}$$

$f_{nref1000,dyno} = 31.93$ r/s $= 1915.8$ r/min

(g) *Driver model.* Use the GEM HIL model's driver submodel or design a driver model to simulate a human driver modulating the throttle and brake pedals. In either case, tune the model to follow the test cycle as closely as possible meeting the following specifications:

(1) The driver model must meet the following speed requirements:

(i) For operation over the highway cruise cycles, the speed requirements described in 40 CFR 1066.425(b) and (c).

(ii) For operation over the transient cycle specified in appendix A of this part, the SET as defined § 1036.510, the Federal Test Procedure (FTP) as defined in § 1036.512, and the Low Load Cycle (LLC) as defined in § 1036.514, the speed requirements described in 40 CFR 1066.425(b) and (c).

(iii) The exceptions in 40 CFR 1066.425(b)(4) apply to the highway cruise cycles, the transient cycle specified in appendix A of this part, SET, FTP, and LLC.

(iv) If the speeds do not conform to these criteria, the test is not valid and must be repeated.

(2) Send a brake signal when operator demand is zero and vehicle speed is greater than the reference vehicle speed from the test cycle. Include a delay before changing the brake signal to prevent dithering, consistent with good engineering judgment.

(3) Allow braking only if operator demand is zero.

(4) Compensate for the distance driven over the duty cycle over the course of the test. Use the following equation to perform the compensation in real time to determine your time in the cycle:

$$t_{\mathrm{cycle}i} = \sum_{i=1}^{N}\left(\left(\frac{v_{\mathrm{vehicle},i-1}}{v_{\mathrm{cycle},i-1}}\right) \cdot \Delta t_{i-1}\right)$$

Eq. 1036.545-6

Where:

$v_{vehicle}$ = measured vehicle speed.

v_{cycle} = reference speed from the test cycle. If $v_{cycle,i\text{-}1} < 1.0$ m/s, set $v_{cycle,i\text{-}1} = v_{vehicle i\text{-}1}$

(h) *Vehicle configurations to evaluate for generating fuel maps as defined in § 1036.505.* Configure the driveline and vehicle models from paragraph (f) of this section in the test cell to test the powertrain. Simulate multiple vehicle configurations that represent the range of intended vehicle applications using one of the following options:

(1) For known vehicle configurations, use at least three equally spaced axle ratios or tire sizes and three different road loads (nine configurations), or at least four equally spaced axle ratios or tire sizes and two different road loads (eight configurations). Select axle ratios to represent the full range of expected vehicle installations. Select axle ratios and tire sizes such that the ratio of

engine speed to vehicle speed covers the range of ratios of minimum and maximum engine speed to vehicle speed when the transmission is in top gear for the vehicles in which the powertrain will be installed. Note that you do not have to use the same axle ratios and tire sizes for each GEM regulatory subcategory. You may determine appropriate C_{rr}, C_dA, and mass values to cover the range of intended vehicle applications or you may use the C_{rr}, C_dA, and mass values specified in paragraph (h)(2) of this section.

(2) If vehicle configurations are not known, determine the vehicle model inputs for a set of vehicle configurations as described in § 1036.540(c)(3) with the following exceptions:

(i) In the equations of § 1036.540(c)(3)(i), $k_{topgear}$ is the actual top gear ratio of the powertrain instead of the transmission gear ratio in the highest available gear given in Table 1 in § 1036.540.

(ii) Test at least eight different vehicle configurations for powertrains that will be installed in Spark-ignition HDE, vocational Light HDV, and vocational Medium HDV using the following table instead of Table 2 in § 1036.540:

Table 1 to Paragraph (h)(2)(ii) of § 1036.545—Vehicle Configurations for Testing Spark-ignition HDE, Light HDE, and Medium HDE

Parameter	1	2	3	4	5	6	7	8
C_{rr} (N/kN)	6.2	7.7	6.2	7.7	6.2	7.7	6.2	7.7
C_dA	3.4	5.4	3.4	5.4	3.4	5.4	3.4	5.4
CI engine speed for $\frac{f_{ntire}}{v_{vehicle}}$ and k_a	f_{nrefA}	f_{nrefA}	f_{nrefB}	f_{nrefB}	f_{nrefC}	f_{nrefC}	f_{ntest}	f_{ntest}
SI engine speed for $\frac{f_{ntire}}{v_{vehicle}}$ and k_a	f_{nrefD}	f_{nrefD}	f_{nrefA}	f_{nrefA}	f_{nrefB}	f_{nrefB}	f_{nrefC}	f_{nrefC}
M (kg)	7,257	11,408	7,257	11,408	7,257	11,408	7,257	11,408
$M_{rotating}$ (kg)	340	340	340	340	340	340	340	340
Drive axle configuration[a]	4x2	4x2	4x2	4x2	4x2	4x2	4x2	4x2
GEM regulatory subcategory[a]	LHD	MHD	LHD	MHD	LHD	MHD	LHD	MHD

[a]Drive axle configuration and GEM regulatory subcategory are not used if using the equations in paragraph (f)(3) of this section.

(iii) Select and test vehicle configurations as described in § 1036.540(c)(3)(iii) for powertrains that will be installed in vocational Heavy HDV and tractors using the following tables instead of Table 3 and Table 4 in § 1036.540:

Table 2 to Paragraph (h)(2)(iii) of § 1036.545—Vehicle Configurations for Testing General Purpose Tractors and Vocational Heavy HDV

Parameter	1	2	3	4	5	6	7	8	9
C_{rr} (N/kN)	6.9	6.9	6.9	6.9	6.9	6.9	6.9	6.9	6.9
C_dA	5.4	4.7	4.0	5.4	4.7	4.0	5.4	4.7	4.0
Engine speed for $\frac{f_{ntire}}{v_{vehicle}}$ and k_a	f_{nrefD}	f_{nrefD}	f_{nrefD}	f_{nrefB}	f_{nrefB}	f_{nrefB}	f_{ntest}	f_{ntest}	f_{ntest}
M (kg)	31,978	25,515	19,051	31,978	25,515	19,051	31,978	25,515	19,051
$M_{rotating}$ (kg)	1,021	794	794	1,021	794	794	1,021	794	794
Drive axle Cconfiguration[a]	6x4	6x4	4x2	6x4	6x4	4x2	6x4	6x4	4x2
GEM regulatory subcategory[a]	C8_SC_HR	C8_DC_MR	C7_DC_MR	C8_SC_HR	C8_DC_MR	C7_DC_MR	C8_SC_HR	C8_DC_MR	C7_DC_MR
Vehicle weight reduction (pounds)	0	13,275	6,147	0	13,275	6,147	0	13,275	6,147

[a]Drive axle configuration and GEM regulatory subcategory are not used if using the equations in paragraph (f)(3) of this section.

Table 3 to Paragraph (h)(2)(iii) of § 1036.545—Vehicle Configurations for Testing Heavy HDE Installed in Heavy-Haul Tractors

Parameter	1	2	3	4	5	6
C_{rr} (N/kN)	6.9	6.9	6.9	6.9	6.9	6.9
C_dA	5.0	5.4	5.0	5.4	5.0	5.4
Engine speed for $\frac{f_{ntire}}{v_{vehicle}}$ and k_a	f_{nrefD}	f_{nrefD}	f_{nrefB}	f_{nrefB}	f_{ntest}	f_{ntest}
M (kg)	53,751	31,978	53,751	31,978	53,751	31,978
$M_{rotating}$ (kg)	1,021	1,021	1,021	1,021	1,021	1,021
Drive axle configuration[a]	6x4	6x4	6x4	6x4	6x4	6x4
GEM regulatory subcategory[a]	C8_HH	C8_SC_HR	C8_HH	C8_SC_HR	C8_HH	C8_SC_HR

[a]Drive axle configuration and GEM regulatory subcategory are not used if using the equations in paragraph (f)(3) of this section.

(3) For hybrid powertrain systems where the transmission will be simulated, use the transmission parameters defined in § 1036.540(c)(2) to determine transmission type and gear ratio. Use a fixed transmission efficiency of 0.95. The GEM HIL transmission model uses a transmission parameter file for each test that includes the transmission type, gear ratios, lockup gear, torque limit per gear from § 1036.540(c)(2), and the values from § 1036.505(b)(4) and (c).

(i) [Reserved]

(j) *Duty cycles to evaluate.* Operate the powertrain over each of the duty cycles specified in 40 CFR 1037.510(a)(2), and for each applicable vehicle configuration from paragraph (h) of this section. Determine cycle-average powertrain fuel maps by testing the powertrain using the procedures in § 1036.540(d) with the following exceptions:

(1) Understand ''engine'' to mean ''powertrain''.

(2) Warm up the powertrain as described in § 1036.520(c)(1).

(3) Within 90 seconds after concluding the warm-up, start the transition to the preconditioning cycle as described in paragraph (j)(5) of this section.

(4) For plug-in hybrid engines, precondition the battery and then complete all back-to-back tests for each vehicle configuration according to 40 CFR 1066.501 before moving to the next vehicle configuration. Figure 2 of this section provides an example of a charge-depleting test sequence where there are two test intervals that contain engine operation. Figure 2 follows:

Figure 2 to Paragraph (j)(4) of § 1036.545—Generic Duty-Cycle Cycle Charge-Depleting Test Sequence

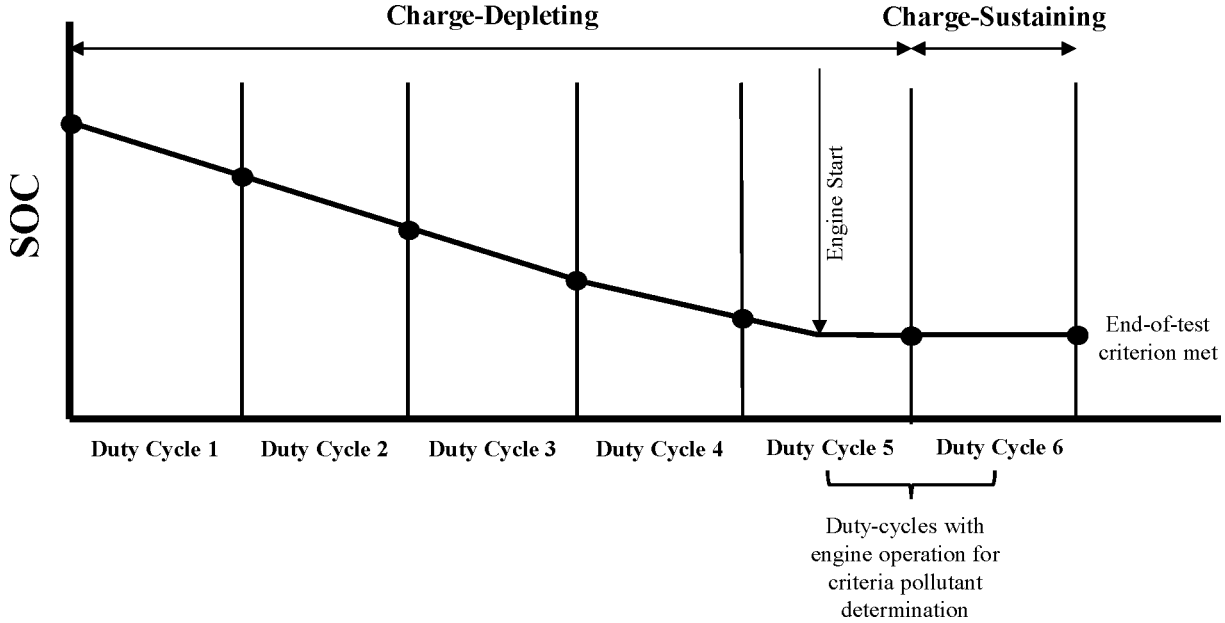

(5) If the preceding duty cycle does not end at 0 mi/hr, transition between duty cycles by decelerating at a rate of 2 mi/hr/s at 0% grade until the vehicle reaches zero speed. Shut off the powertrain. Prepare the powertrain and test cell for the next duty-cycle.

(6) Start the next duty-cycle within 60 to 180 seconds after shutting off the powertrain.

(i) To start the next duty-cycle, for hybrid powertrains, key on the vehicle and then start the duty-cycle. For conventional powertrains key on the vehicle, start the engine, wait for the engine to stabilize at idle speed, and then start the duty-cycle.

(ii) If the duty-cycle does not start at 0 mi/hr, transition to the next duty cycle by accelerating at a target rate of 1 mi/hr/s at 0% grade. Stabilize for 10 seconds at the initial duty cycle conditions and start the duty-cycle.

(7) Calculate cycle work using GEM or the speed and torque from the driveline and vehicle models from paragraph (f) of this section to determine the sequence of duty cycles.

(8) Calculate the mass of fuel consumed for idle duty cycles as described in paragraph (n) of this section.

(k) *Measuring NO_X emissions.* Measure NO_X emissions for each sampling period in grams. You may perform these measurements using a NO_X emission-measurement system that meets the requirements of 40 CFR part 1065, subpart J. If a system malfunction prevents you from measuring NO_X emissions during a test under this section but the test otherwise gives valid results, you may consider this a valid test and omit the NO_X emission measurements; however, we may require you to repeat the test if we determine that you inappropriately voided the test with respect to NO_X emission measurement.

(l) [Reserved]

(m) *Measured output speed validation.* For each test point, validate the measured output speed(s) with the corresponding reference values. For test setups where speed is measured at multiple locations, each location must meet the requirements in this paragraph (m). If the range of reference speed is less than 10 percent of the mean reference speed, you need to meet only the standard error of the estimate in Table 1 of this section. You may delete points when the vehicle is stopped. If your speed measurement is not at the location of fnref, correct your measured speed using the constant speed ratio between the two locations. Apply cycle-validation criteria for each separate transient or highway cruise cycle based on the following parameters:

TABLE 4 TO PARAGRAPH (m) OF § 1036.545—STATISTICAL CRITERIA FOR VALIDATING DUTY CYCLES

Parameter [a]	Speed control
Slope, a_1	$0.990 \leq a_1 \leq 1.010$.
Absolute value of intercept, $\lvert a_0 \rvert$.	≤2.0% of maximum f_{nref} speed.
Standard error of the estimate, *SEE*.	≤2.0% of maximum f_{nref} speed.
Coefficient of determination, r^2.	≥0.990.

[a] Determine values for specified parameters as described in 40 CFR 1065.514(e) by comparing measured and reference values for $f_{nref,dyno}$.

(n) *Fuel consumption at idle.* Record measurements using direct and/or indirect measurement of fuel flow. Determine the fuel-consumption rates at idle for the applicable duty cycles described in 40 CFR 1037.510(a)(2) as follows:

(1) *Direct fuel flow measurement.* Determine the corresponding mean values for mean idle fuel mass flow rate, $\overline{m}_{fuelidle}$, for each duty cycle, as applicable. Use of redundant direct fuel-flow measurements require our advance approval.

(2) *Indirect fuel flow measurement.* Record speed and torque and measure emissions and other inputs needed to run the chemical balance in 40 CFR 1065.655(c). Determine the corresponding mean values for each duty cycle. Use of redundant indirect fuel-flow measurements require our advance approval. Measure background concentration as described in § 1036.535(b)(4)(ii). We recommend setting the CVS flow rate as low as possible to minimize background, but without introducing errors related to insufficient mixing or other operational considerations. Note that for this testing 40 CFR 1065.140(e) does not apply, including the minimum dilution ratio of 2:1 in the primary dilution stage. Calculate the idle fuel mass flow rate for each duty cycle, $\overline{m}_{fuelidle}$, for each set of vehicle settings, as follows:

$$\bar{\dot{m}}_{\mathrm{fuelidle}} = \frac{M_{\mathrm{C}}}{w_{\mathrm{Cmeas}}} \cdot \left(\bar{\dot{n}}_{\mathrm{exh}} \cdot \frac{\bar{x}_{\mathrm{Ccombdry}}}{1 + \bar{x}_{\mathrm{H2Oexhdry}}} - \frac{\bar{\dot{m}}_{\mathrm{CO2DEF}}}{M_{\mathrm{CO2}}} \right)$$

Eq. 1036.545-7

Where:

M_C = molar mass of carbon.

w_{Cmeas} = carbon mass fraction of fuel (or mixture of test fuels) as determined in 40 CFR 1065.655(d), except that you may not use the default properties in Table 2 of 40 CFR 1065.655 to determine α, β, and w_C for liquid fuels.

$\overline{n}_{exh}$ = the mean raw exhaust molar flow rate from which you measured emissions according to 40 CFR 1065.655.

$\bar{x}_{Ccombdry}$ = the mean concentration of carbon from fuel and any injected fluids in the exhaust per mole of dry exhaust.

$\bar{x}_{H2Oexhdry}$ = the mean concentration of H_2O in exhaust per mole of dry exhaust.

$\overline{m}_{CO2DEF}$ = the mean CO_2 mass emission rate resulting from diesel exhaust fluid decomposition over the duty cycle as determined in § 1036.535(b)(9). If your engine does not use diesel exhaust fluid, or if you choose not to perform this correction, set equal to 0.

M_{CO2} = molar mass of carbon dioxide.

Example:

$M_C = 12.0107$ g/mol

$w_{Cmeas} = 0.867$

$\bar{\dot{n}}_{exh} = 25.534$ mol/s

$\bar{x}_{Ccombdry} = 2.805 \cdot 10^{-3}$ mol/mol

$\bar{x}_{H2Oexhdry} = 3.53 \cdot 10^{-2}$ mol/mol

$\bar{\dot{m}}_{CO2DEF} = 0.0726$ g/s

$M_{CO2} = 44.0095$

$$\bar{\dot{m}}_{fuelidle} = \frac{12.0107}{0.867} \cdot \left(25.534 \cdot \frac{2.805 \cdot 10^{-3}}{1 + 3.53 \cdot 10^{-2}} - \frac{0.0726}{44.0095}\right)$$

$\bar{\dot{m}}_{fuelidle} = 0.405$ g/s = 1458.6 g/hr

(o) *Create GEM inputs.* Use the results of powertrain testing to determine GEM inputs for the different simulated vehicle configurations as follows:

(1) Correct the measured or calculated fuel masses, $m_{fuel[cycle]}$, and mean idle fuel mass flow rates, $\overline{m}_{fuelidle}$, if applicable, for each test result to a mass-specific net energy content of a reference fuel as described in § 1036.535(e), replacing mean fuel with $\overline{m}_{fuelidle}$ with $m_{fuel[cycle]}$ where applicable in Eq. 1036.535–4.

(2) Declare fuel masses, $m_{fuel[cycle]}$ and $\overline{m}_{fuelidle}$. Determine $m_{fuel[cycle]}$ using the calculated fuel mass consumption values described in § 1036.540(d)(12). In addition, declare mean fuel mass flow rate for each applicable idle duty cycle, $\overline{m}_{fuelidle}$. These declared values may not be lower than any corresponding measured values determined in this section. If you use both direct and indirect measurement of fuel flow, determine the corresponding declared values as described in § 1036.535(g)(2) and (3). These declared values, which serve as emission standards, collectively represent the powertrain fuel map for certification.

(3) For engines designed for plug-in hybrid electric vehicles, the mass of fuel for each cycle, $m_{fuel[cycle]}$, is the utility factor-weighted fuel mass, $m_{fuelUF[cycle]}$. This is determined by calculating m_{fuel} for the full charge-depleting and charge-sustaining portions of the test and weighting the results, using the following equation:

$$m_{fuelUF[cycle]} = \sum_{i=1}^{N}\left[m_{fuel[cycle]CDi} \cdot (UF_{DCDi} - UF_{DCDi-1})\right] + \sum_{j=1}^{M}\left[m_{fuel[cycle]CSj}\right] \cdot \frac{(1 - UF_{RCD})}{M}$$

Eq. 1036.545-8

Where:

i = an indexing variable that represents one test interval.

N = total number of charge-depleting test intervals.

$m_{fuel[cycle]CDi}$ = total mass of fuel in the charge-depleting portion of the test for each test interval, i, starting from i = 1, including the test interval(s) from the transition phase.

UF_{DCDi} = utility factor fraction at distance D_{CDi} from Eq. 40 CFR 1037.505–9 as determined by interpolating the approved utility factor curve for each test interval, i, starting from i = 1.

Let $UF_{DCD0} = 0$

j = an indexing variable that represents one test interval.

M = total number of charge-sustaining test intervals.

$m_{fuel[cycle]CSj}$ = total mass of fuel over the charge-sustaining portion of the test for each test interval, j, starting from j = 1.

UF_{RCD} = utility factor fraction at the full charge-depleting distance, RCD, as determined by interpolating the approved utility factor curve. RCD is the cumulative distance driven over N charge-depleting test intervals.

$$D_{CDi} = \sum_{k=1}^{Q}(v_k \cdot \Delta t)$$

Eq. 1036.545-9

Where:

k = an indexing variable that represents one recorded velocity value.

Q = total number of measurements over the test interval.

v = vehicle velocity at each time step, k, starting from k = 1. For tests completed under this section, v is the vehicle velocity as determined by Eq. 1036.545–1. Note that this should include charge-depleting test intervals that start when the engine is not yet operating.

$\Delta t = 1/f_{record}$

f_{record} = the record rate.

Example for the 55 mi/hr cruise cycle:

Q = 8790

$v_1 = 55.0$ mi/hr

$v_2 = 55.0$ mi/hr

$v_3 = 55.1$ mi/hr

$f_{record} = 10$ Hz

$\Delta t = 1/10$ Hz = 0.1 s

$$D_{\mathrm{CD1}} = \sum_{k=1}^{8790} (55.0 \cdot 0.1 + 55.0 \cdot 0.1 + 55.1 \cdot 0.1 + v_{8790} \cdot \Delta t) = 13.4 \text{ mi}$$

D_{CD2} = 13.4 mi
D_{CD3} = 13.4 mi
N = 3
UF_{DCD1} = 0.05
UF_{DCD2} = 0.11
UF_{DCD3} = 0.21
$m_{fuel55cruiseCD1}$ = 0 g
$m_{fuel55cruiseCD2}$ = 0 g
$m_{fuel55cruiseCD3}$ = 1675.4 g
M = 1
$m_{fuel55cruiseCS}$ = 4884.1 g
UF_{RCD} = 0.21

$$m_{\mathrm{fuelUF55cruise}} = [0 \cdot (0.05 - 0) + 0 \cdot (0.11 - 0.05) + 1675.4 \cdot (0.21 - 0.11)] + 4884.1 \cdot \frac{(1 - 0.21)}{1}$$

$m_{fuelUF55cruise}$ = 4026.0 g

(4) For the transient cycle specified in 40 CFR 1037.510(a)(2)(i), calculate powertrain output speed per unit of vehicle speed,

$$\left[\frac{\bar{f}_{\mathrm{npowertrain}}}{\bar{v}_{\mathrm{powertrain}}}\right]_{[\mathrm{cycle}]}$$

using one of the following methods:

(i) For testing with torque measurement at the axle input shaft:

$$\left[\frac{\bar{f}_{\mathrm{npowertrain}}}{\bar{v}_{\mathrm{powertrain}}}\right]_{[\mathrm{cycle}]} = \frac{k_a}{2 \cdot \pi \cdot r_{[\mathrm{speed}]}}$$

Eq. 1036.545-10

Example:

k_a = 4.0
r_B = 0.399 m

$$\left[\frac{\bar{f}_{\mathrm{npowertrain}}}{\bar{v}_{\mathrm{powertrain}}}\right]_{\mathrm{transienttest4}} = \frac{4.0}{2 \cdot 3.14 \cdot 0.399}$$

$$\left[\frac{\bar{f}_{\mathrm{npowertrain}}}{\bar{v}_{\mathrm{powertrain}}}\right]_{\mathrm{transienttest4}} = 1.596 \text{ r/m}$$

(ii) For testing with torque measurement at the wheel hubs, use Eq. 1036.545–8 setting ka equal to 1.

(iii) For testing with torque measurement at the engine's crankshaft:

$$\left[\frac{\bar{f}_{\mathrm{npowertrain}}}{\bar{v}_{\mathrm{powertrain}}}\right]_{[\mathrm{cycle}]} = \frac{\bar{f}_{\mathrm{nengine}}}{\bar{v}_{\mathrm{ref}}}$$

Eq. 1036.545-11

Where:

$\bar{f}_{nengine}$ = average engine speed when vehicle speed is at or above 0.100 m/s.

$\bar{v}_{ref}$ = average simulated vehicle speed at or above 0.100 m/s.

Example:

$$\bar{f}_{\mathrm{nengine}} = 1870 \text{ r/min} = 31.17 \text{ r/s}$$

$$\bar{v}_{\mathrm{ref}} = 19.06 \text{ m/s}$$

$$\left[\frac{\bar{f}_{\mathrm{npowertrain}}}{\bar{v}_{\mathrm{powertrain}}}\right]_{\mathrm{transienttest4}} = \frac{31.17}{19.06}$$

$$\left[\frac{\bar{f}_{\mathrm{npowertrain}}}{\bar{v}_{\mathrm{powertrain}}}\right]_{\mathrm{transienttest4}} = 1.635 \text{ r/m}$$

(5) Calculate engine idle speed, by taking the average engine speed measured during the transient cycle test while the vehicle speed is below 0.100 m/s. (**Note:** Use all the charge-sustaining test intervals when determining engine idle speed for plug-in hybrid engines and plug-in hybrid powertrains.)

(6) For the cruise cycles specified in 40 CFR 1037.510(a)(2)(ii), calculate the average powertrain output speed, $\bar{f}_{npowertrain}$, and the average powertrain output torque (positive torque only), $\bar{T}_{powertrain}$ at vehicle speed at or above 0.100 m/s. (**Note:** Use all the charge-sustaining and charge-depleting test intervals when determining $f_{npowertrain}$ and $\bar{T}_{powertrain}$ for plug-in hybrid engines and plug-in hybrid powertrains.)

(7) Calculate positive work, $W_{[cycle]}$, as the work over the duty cycle at the axle input shaft, wheel hubs, or the engine's crankshaft, as applicable, when vehicle speed is at or above 0.100 m/s. For plug-in hybrid engines and plug-in hybrid powertrains, calculate $W_{[cycle]}$ by calculating the positive work over each of the charge-sustaining and charge-depleting test intervals and then averaging them together. For test setups where speed and torque are measured at multiple locations, determine $W_{[cycle]}$ by integrating the sum of the power measured at each location.

(8) The following tables illustrate the GEM data inputs corresponding to the different vehicle configurations for a given duty cycle:

(i) For the transient cycle:

Table 5 to Paragraph (o)(8)(i) of § 1036.545 –Example of Output Matrix for Transient Cycle Vehicle Configurations

Parameter	Configuration					
	1	2	3	4	…	*n*
$m_{\text{fuel[cycle]}}$						
$\left[\frac{\bar{f}_{\text{npowertrain}}}{\bar{v}_{\text{powertrain}}}\right]_{\text{[cycle]}}$						
$W_{\text{[cycle]}}$						
$\bar{f}_{\text{nidle}}$						

(ii) For the cruise cycles:

TABLE 6 TO PARAGRAPH (o)(8)(ii) OF § 1036.545—GENERIC EXAMPLE OF OUTPUT MATRIX FOR CRUISE CYCLE VEHICLE CONFIGURATIONS

Parameter	Configuration								
	1	2	3	4	5	6	7	. . .	*n*
$m_{\text{fuel[cycle]}}$.									
$\bar{f}_{\text{powertrain[cycle]}}$.									
$\bar{T}_{\text{powertrain[cycle]}}$.									
$W_{\text{[cycle]}}$.									

(p) *Determining useable battery energy.* Useable battery energy (UBE) is defined as the total DC discharge energy, E_{DCDtotal}, measured in DC Watt hours, over the charge-depleting portion of the test sequence determined in paragraph (p)(2) of this section for the Heavy-duty Transient Test Cycle in 40 CFR part 1037, appendix A. Select a representative vehicle configuration from paragraph (h) of this section for determination of UBE. UBE represents the total deliverable energy the battery is capable of providing while a powertrain is following a duty cycle on a dynamometer.

(1) *Measure DC discharge energy,* E_{DCD}, in watt-hours and DC discharge current per hour, C_{D}, for the charge-depleting portion of the test sequence. The measurement points must capture all the current flowing into and out of the battery pack during powertrain operation, including current associated with regenerative braking. The equation for calculating powertrain E_{DCD} is given in Eq. 1036.545–12, however, it is expected that this calculation will typically be performed internally by the power analyzer specified in paragraph (a)(10)(i) of this section. Battery voltage measurements made by the powertrain's own on-board sensors (such as those available via a diagnostic port) may be used for calculating EDCD if these measurements are equivalent to those produced by the power analyzer.

$$E_{\text{DCD}} = \sum_{i=0}^{N} V_i \cdot I_i \cdot \Delta t$$

Eq. 1036.545-12

Where:

i = an indexing variable that represents one individual measurement.

N = total number of measurements.

V = battery DC bus voltage.

I = battery current.

$\Delta t = 1/f_{\text{record}}$

f_{record} = the data recording frequency.

Example:

N = 13360

$V_1 = 454.0$

$V_2 = 454.0$

$I_1 = 0$

$I_2 = 0$

$f_{\text{record}} = 20$ Hz

$\Delta t = 1/20 = 0.05$ s

$$E_{\text{DCD}} = \sum_{i=0}^{13360} (454.0 \cdot 0 + 454.0 \cdot 0 + \cdots + V_{13360} \cdot I_{13360}) \cdot 0.05$$

E_{DCD} = 6540232.7 W·s = 1816.7 W·hr

(2) Determine a declared UBE that is at or below the corresponding value determined in paragraph (p)(1) of this section, including those from redundant measurements. This declared UBE serves as the initial UBE determined under 40 CFR 1037.115(f).

■ 30. Amend § 1036.550 by revising paragraphs (b)(1)(i), (b)(2) introductory text, and (b)(2)(i) to read as follows:

§ 1036.550 Calculating greenhouse gas emission rates.

* * * * *

(b) * * *

(1) * * *

(i) For liquid fuels, determine $E_{\text{mfuelmeas}}$ according to ASTM D4809 (incorporated by reference, see § 1036.810). Have the sample analyzed by at least three different labs and determine the final value of your test fuel's $E_{\text{mfuelmeas}}$ as the median of all the lab test results you obtained as described in 40 CFR 1065.602(m). If you have results from three different labs, we recommend you screen them to

determine if additional observations are needed. To perform this screening, determine the absolute value of the difference between each lab result and the average of the other two lab results. If the largest of these three resulting absolute value differences is greater than 0.297 MJ/kg, we recommend you obtain additional results prior to determining the final value of $E_{mfuelmeas}$.

* * * * *

(2) Determine your test fuel's carbon mass fraction, w_C, as described in 40 CFR 1065.655(d), expressed to at least three decimal places; however, you must measure fuel properties for α and β rather than using the default values specified in 40 CFR 1065.655(e).

(i) For liquid fuels, have the sample analyzed by at least three different labs and determine the final value of your test fuel's w_C as the median of all of the lab results you obtained as described in 40 CFR 1065.602(m). If you have results from three different labs, we recommend you screen them to determine if additional observations are needed. To perform this screening, determine the absolute value of the difference between each lab result and the average of the other two lab results. If the largest of these three resulting absolute value differences is greater than 1.56 percent carbon, we recommend you obtain additional results prior to determining the final value of w_C.

* * * * *

■ 31. Amend § 1036.605 by revising paragraph (e) to read as follows:

§ 1036.605 Alternate emission standards for engines used in specialty vehicles.

* * * * *

(e) In a separate application for a certificate of conformity, identify the corresponding nonroad engine family, describe the label required under section, state that you meet applicable diagnostic requirements under 40 CFR part 1039 or part 1048, and identify your projected U.S.-directed production volume.

* * * * *

■ 32. Amend § 1036.615 by revising paragraph (a) to read as follows:

§ 1036.615 Engines with Rankine cycle waste heat recovery and hybrid powertrains.

* * * * *

(a) *Pre-transmission hybrid powertrains.* Test pre-transmission hybrid powertrains with the hybrid engine procedures of 40 CFR part 1065 or with the post-transmission procedures in § 1036.545. Pre-transmission hybrid powertrains are those engine systems that include features to recover and store energy during engine motoring operation but not from the vehicle's wheels. Engines certified with pre-transmission hybrid powertrains must be certified to meet the diagnostic requirements as specified in § 1036.110 with respect to powertrain components and systems; if different manufacturers produce the engine and the hybrid powertrain, the hybrid powertrain manufacturer may separately certify its powertrain relative to diagnostic requirements.

* * * * *

■ 33. Amend § 1036.630 by revising paragraph (b) to read as follows:

§ 1036.630 Certification of engine greenhouse gas emissions for powertrain testing.

* * * * *

(b) If you choose to certify only fuel map emissions for an engine family and to not certify emissions over powertrain cycles under § 1036.545, we will not presume you are responsible for emissions over the powertrain cycles. However, where we determine that you are responsible in whole or in part for the emission exceedance in such cases, we may require that you participate in any recall of the affected vehicles. Note that this provision to limit your responsibility does not apply if you also hold the certificate of conformity for the vehicle.

* * * * *

■ 34. Amend § 1036.705 by revising paragraph (c) introductory text, redesignating paragraph (c)(4) as paragraph (c)(5), and adding a new paragraph (c)(4) to read as follows:

§ 1036.705 Generating and calculating emission credits.

* * * * *

(c) Compliance with the requirements of this subpart is determined at the end of the model year by calculating emission credits based on actual production volumes, excluding the following engines:

* * * * *

(4) Engines certified to state emission standards that are different than the emission standards in this part.

* * * * *

■ 35. Amend § 1036.725 by revising paragraph (b)(2) to read as follows:

§ 1036.725 Required information for certification.

* * * * *

(b) * * *

(2) Calculations of projected emission credits (positive or negative) based on projected production volumes as described in § 1036.705(c). We may require you to include similar calculations from your other engine families to project your net credit balances for the model year. If you project negative emission credits for a family, state the source of positive emission credits you expect to use to offset the negative emission credits.

■ 36. Amend § 1036.730 by revising paragraphs (b)(4) and (f)(1) to read as follows:

§ 1036.730 ABT reports.

* * * * *

(b) * * *

(4) The projected and actual production volumes for calculating emission credits for the model year. If you changed an FEL/FCL during the model year, identify the actual production volume associated with each FEL/FCL.

* * * * *

(f) * * *

(1) If you notify us by the deadline for submitting the final report that errors mistakenly decreased your balance of emission credits, you may correct the errors and recalculate the balance of emission credits. If you notify us that errors mistakenly decreased your balance of emission credits after the deadline for submitting the final report, you may correct the errors and recalculate the balance of emission credits after applying a 10 percent discount to the credit correction, but only if you notify us within 24 months after the deadline for submitting the final report. If you report a negative balance of emission credits, we may disallow corrections under this paragraph (f)(1).

* * * * *

■ 37. Amend § 1036.735 by revising paragraph (d) to read as follows:

§ 1036.735 Recordkeeping.

* * * * *

(d) Keep appropriate records to document production volumes of engines that generate or use emission credits under the ABT program. For example, keep available records of the engine identification number (usually the serial number) for each engine you produce that generates or uses emission credits. You may identify these numbers as a range. If you change the FEL/FCL after the start of production, identify the date you started using each FEL/FCL and the range of engine identification numbers associated with each FEL/FCL. You must also identify the purchaser and destination for each engine you produce to the extent this information is available.

* * * * *

■ 38. Amend § 1036.801 by:

■ a. Adding a definition of ''Carbon-containing fuel'' in alphabetical order.
■ b. Removing the definitions of ''Criteria pollutants'' and ''Greenhouse gas''.
■ c. Revising the definition of ''Hybrid''.
■ d. Removing the definitions of ''Hybrid engine'' and ''Hybrid powertrain''.
■ e. Revising the definition of ''Mild hybrid''.
■ f. Adding a definition of ''Neat'' in alphabetical order.
■ g. Revising the definitions of ''Small manufacturer'' and ''U.S.-directed production volume''.

The additions and revisions read as follows:

§ 1036.801 Definitions.

* * * * *

Carbon-containing fuel has the meaning given in 40 CFR 1065.1001.

* * * * *

Hybrid means relating to an engine or powertrain that includes a Rechargeable Energy Storage System. Hybrid engines store and recover energy in a way that is integral to the engine or otherwise upstream of the vehicle's transmission. Examples of hybrid engines include engines with hybrid components connected to the front end of the engine (P0), at the crankshaft before the clutch (P1), or connected between the clutch and the transmission where the clutch upstream of the hybrid feature is in addition to the transmission clutch(s) (P2). Engine-based systems that recover kinetic energy to power an electric heater in the aftertreatment are themselves not sufficient to qualify as a hybrid engine. Provisions that apply for hybrid powertrains apply equally for hybrid engines, except as specified. Note that certain provisions in this part treat hybrid powertrains intended for vehicles that include regenerative braking different than those intended for vehicles that do not include regenerative braking. The definition of hybrid includes plug-in hybrid electric powertrains.

* * * * *

Mild hybrid means relating to a hybrid engine or hybrid powertrain with regenerative braking capability where the system recovers less than 20 percent of the total braking energy over the transient cycle defined in appendix A of 40 CFR part 1037.

* * * * *

Neat has the meaning given in § 1065.1001.

* * * * *

Small manufacturer means a manufacturer meeting the criteria specified in 13 CFR 121.201. The employee and revenue limits apply to the total number of employees and total revenue together for all affiliated companies (as defined in 40 CFR 1068.30). Note that manufacturers with low production volumes may or may not be ''small manufacturers''.

* * * * *

U.S.-directed production volume means the number of engines, subject to the requirements of this part, produced by a manufacturer for which the manufacturer has a reasonable assurance that sale was or will be made to ultimate purchasers in the United States. Note that this includes engines certified to state emission standards that are different than the emission standards in this part.

* * * * *

■ 39. Amend § 1036.805 by adding an entry for ''GCWR'' to Table 5 in alphabetical order to read as follows:

§ 1036.805 Symbols, abbreviations, and acronyms.

* * * * *

(e) * * *

TABLE 5 TO PARAGRAPH (e) OF § 1036.805—OTHER ACRONYMS AND ABBREVIATIONS

Acronym	Meaning
* * * * *	
GCWR	gross combined weight rating.
* * * * *	

* * * * *

■ 40. Amend § 1036.810 by adding paragraph (e) to read as follows:

§ 1036.810 Incorporation by reference.

* * * * *

(e) U.S. EPA, Office of Air and Radiation, 2565 Plymouth Road, Ann Arbor, MI 48105; *www.epa.gov*; *complianceinfo@epa.gov*.

(1) Greenhouse gas Emissions Model (GEM) Phase 2, Version 4.0, April 2022 (''GEM Phase 2, Version 4.0''); IBR approved for § 1036.545(a).

(2) [Reserved]

■ 41. Amend § 1036.815 by revising paragraph (b) to read as follows:

§ 1036.815 Confidential information.

* * * * *

(b) Emission data or information that is publicly available cannot be treated as confidential business information as described in 40 CFR 1068.11. Data that vehicle manufacturers need for demonstrating compliance with greenhouse gas emission standards, including fuel-consumption data as described in §§ 1036.535 and 1036.545, also qualify as emission data for purposes of confidentiality determinations.

PART 1037—CONTROL OF EMISSIONS FROM NEW HEAVY-DUTY MOTOR VEHICLES

■ 42. The authority citation for part 1037 continues to read as follows:

Authority: 42 U.S.C. 7401–7671q.

■ 43. Amend § 1037.1 by revising paragraph (a) to read as follows:

§ 1037.1 Applicability.

(a) The regulations in this part 1037 apply for all new heavy-duty vehicles, except as provided in § 1037.5. This includes battery electric vehicles, fuel cell electric vehicles, and vehicles fueled by conventional and alternative fuels.

* * * * *

■ 44. Amend § 1037.5 by:
■ a. Revising paragraph (e).
■ b. Removing paragraphs (g) and (h).
■ c. Redesignating paragraph (i) as paragraph (g).

The revision reads as follows:

§ 1037.5 Excluded vehicles.

* * * * *

(e) Vehicles subject to the heavy-duty emission standards of 40 CFR part 86. See 40 CFR part 86, subpart S, for emission standards that apply for these vehicles.

* * * * *

■ 45. Amend § 1037.101 by revising paragraphs (a)(2) and (b)(2) and (3) to read as follows:

§ 1037.101 Overview of emission standards.

* * * * *

(a) * * *

(2) *Exhaust emissions of greenhouse gases.* Emission standards apply as follows for greenhouse gas emissions:

(i) CO_2 emission standards apply as described in §§ 1037.105 and 1037.106. No CH_4 or N_2O standards apply under this part. See 40 CFR part 1036 for CH_4 or N_2O standards that apply to engines used in these vehicles.

(ii) Hydrofluorocarbon standards apply as described in § 1037.115(e). These pollutants are also ''greenhouse gas pollutants'' but are treated separately from exhaust greenhouse gas pollutants listed in paragraph (a)(2)(i) of this section.

* * * * *

(b) * * *

(2) For greenhouse gas pollutants, vehicles are regulated in the following groups:

(i) Tractors above 26,000 pounds GVWR.

(ii) Vocational vehicles.

(3) The greenhouse gas emission standards apply differently depending on the vehicle service class as described in § 1037.140. In addition, standards apply differently for vehicles with spark-ignition and compression-ignition engines. References in this part 1037 to ''spark-ignition'' or ''compression-ignition'' generally relate to the application of standards under 40 CFR 1036.140. For example, a vehicle with an engine certified to spark-ignition standards under 40 CFR part 1036 is generally subject to requirements under this part 1037 that apply for spark-ignition vehicles. However, note that emission standards for Heavy HDE are considered to be compression-ignition standards for purposes of applying vehicle emission standards under this part. Also, for spark-ignition engines voluntarily certified as compression-ignition engines under 40 CFR part 1036, you must choose at certification whether your vehicles are subject to spark-ignition standards or compression-ignition standards. Heavy-duty vehicles with no installed propulsion engine, such as battery electric vehicles, are subject to compression-ignition emission standards for the purpose of calculating emission credits.

* * * * *

■ 46. Amend § 1037.102 by revising the section heading and paragraph (b) introductory text to read as follows:

§ 1037.102 Criteria exhaust emission standards—NO_X, HC, PM, and CO.

* * * * *

(b) Heavy-duty vehicles with no installed propulsion engine, such as battery electric vehicles, are subject to criteria pollutant standards under this part. The emission standards that apply are the same as the standards that apply for compression-ignition engines under 40 CFR 86.007–11 and 1036.104 for a given model year.

* * * * *

■ 47. Amend § 1037.105 by:

■ a. Revising paragraphs (a)(1) and (2) and (b)(1) and (4)

■ b. Removing and reserving paragraph (c).

■ c. Revising paragraph (h)(1).

The revisions read as follows:

§ 1037.105 CO_2 emission standards for vocational vehicles.

(a) * * *

(1) Heavy-duty vehicles at or below 14,000 pounds GVWR that are not subject to the greenhouse gas standards in 40 CFR part 86, subpart S, or that use engines certified under § 1037.150(m).

(2) Vehicles above 14,000 pounds GVWR and at or below 26,000 pounds GVWR, but not certified to the vehicle greenhouse gas standards in 40 CFR part 86, subpart S.

* * * * *

(b) * * *

(1) Model year 2027 and later vehicles are subject to CO_2 standards corresponding to the selected subcategories as shown in the following table:

TABLE 1 OF PARAGRAPH (b)(1) OF § 1037.105—PHASE 3 CO_2 STANDARDS FOR MODEL YEAR 2027 AND LATER VOCATIONAL VEHICLES

[g/ton-mile]

Model year	Subcategory	Compression-ignition engine			Spark-ignition engine	
		Light HDV	Medium HDV	Heavy HDV	Light HDV	Medium HDV
2027	Urban	294	213	232	340	252
	Multi-Purpose	257	190	193	299	223
	Regional	218	173	152	246	202
2028	Urban	275	209	228	321	248
	Multi-Purpose	238	186	189	280	219
	Regional	199	169	148	227	198
2029	Urban	255	202	225	301	241
	Multi-Purpose	218	179	186	260	212
	Regional	179	162	145	207	191
2030	Urban	238	195	200	284	234
	Multi-Purpose	201	172	161	243	205
	Regional	162	155	120	190	184
2031	Urban	219	188	193	265	227
	Multi-Purpose	182	165	154	224	198
	Regional	143	148	113	171	177
2032 and later	Urban	179	176	177	225	215
	Multi-Purpose	142	153	138	184	186
	Regional	103	136	97	131	165

* * * * *

(4) Model year 2014 through 2020 vehicles are subject to Phase 1 CO_2 standards as shown in the following table:

TABLE 4 OF PARAGRAPH (b)(4) § 1037.105—PHASE 1 CO_2 STANDARDS FOR MODEL YEAR 2014 THROUGH 2020 VOCATIONAL VEHICLES

[g/ton-mile]

Vehicle size	CO_2 standard for model years 2014–2016	CO_2 standard for model year 2017–2020
Light HDV	388	373
Medium HDV	234	225
Heavy HDV	226	222

* * * * *

(h) * * *

(1) The following alternative emission standards apply by vehicle type and model year as follows:

TABLE 5 OF PARAGRAPH (h)(1) OF § 1037.105—OPTIONAL PHASE 3 CO_2 STANDARDS FOR MODEL YEAR 2027 AND LATER CUSTOM CHASSIS VOCATIONAL VEHICLES

[g/ton-mile]

Optional custom chassis vehicle type	Model year 2027	Model year 2028	Model year 2029	Model year 2030	Model year 2031	Model year 2032 and later
School Bus	190	182	176	168	163	149
Other Bus	286	269	255	237	220	189
Coach Bus	205	205	205	185	164	154
Refuse Hauler	253	241	232	221	212	191
Concrete Mixer	259	250	240	231	224	205
Motor home	226	226	226	226	226	226
Mixed-use vehicle	316	316	316	316	316	316
Emergency vehicle	319	319	319	319	319	319

TABLE 6 OF PARAGRAPH (h)(1) OF § 1037.105—PHASE 2 CUSTOM CHASSIS STANDARDS FOR MODEL YEARS 2021 THROUGH 2026

[g/ton-mile]

Vehicle type [a]	Assigned vehicle service class	Model year 2021–2026
School bus	Medium HDV	291
Motor home	Medium HDV	228
Coach bus	Heavy HDV	210
Other bus	Heavy HDV	300
Refuse hauler	Heavy HDV	313
Concrete mixer	Heavy HDV	319
Mixed-use vehicle	Heavy HDV	319
Emergency vehicle	Heavy HDV	324

[a] Vehicle types are generally defined in § 1037.801. "Other bus" includes any bus that is not a school bus or a coach bus. A "mixed-use vehicle" is one that meets at least one of the criteria specified in § 1037.631(a)(1) or (2).

* * * * *

■ 48. Amend § 1037.106 by revising the section heading and paragraph (b), removing and reserving paragraph (c), and revising paragraphs (f)(2) introductory text and (f)(2)(i) to read as follows:

§ 1037.106 CO_2 emission standards for tractors above 26,000 pounds GVWR.

* * * * *

(b) CO_2 standards in this paragraph (b) apply based on modeling and testing as described in subpart F of this part. The provisions of § 1037.241 specify how to comply with these standards.

(1) Model year 2027 and later tractors are subject to CO_2 standards corresponding to the selected subcategories as shown in the following tables:

TABLE 1 OF PARAGRAPH (b)(1) OF § 1037.106—CO_2 EMISSION STANDARDS FOR MODEL YEAR 2027 AND LATER TRACTORS

[g/ton-mile]

Model year	Roof height	Class 7 all cab styles	Class 8 day cab	Class 8 sleeper cab	Heavy-haul
2027	Low	86.6	66.1	64.1	48.3
	Mid	93.1	70.2	69.6	
	High	90.0	68.1	64.3	
2028	Low	84.7	64.6	64.1	48.3
	Mid	91.0	68.6	69.6	
	High	88.0	66.6	64.3	
2029	Low	81.8	62.4	64.1	48.3
	Mid	87.9	66.3	69.6	
	High	85.0	64.3	64.3	
2030	Low	77.0	58.7	57.7	43.0
	Mid	82.7	62.4	62.6	
	High	80.0	60.6	57.9	
2031	Low	67.3	51.4	51.3	42.5
	Mid	72.4	54.6	55.7	
	High	70.0	53.0	51.4	
2032 and later	Low	63.5	48.4	48.1	41.1
	Mid	68.2	51.5	52.2	

TABLE 1 OF PARAGRAPH (b)(1) OF § 1037.106—CO_2 EMISSION STANDARDS FOR MODEL YEAR 2027 AND LATER TRACTORS—Continued

[g/ton-mile]

Model year	Roof height	Class 7 all cab styles	Class 8 day cab	Class 8 sleeper cab	Heavy-haul
	High	66.0	50.0	48.2	

(2) Model year 2026 and earlier tractors are subject to CO_2 standards corresponding to the selected subcategory as shown in the following table:

TABLE 2 OF PARAGRAPH (b)(2) OF § 1037.106—CO_2 STANDARDS FOR MODEL YEAR 2026 AND EARLIER TRACTORS

[g/ton-mile]

Subcategory [a]	Phase 1 standards for model years 2014–2016	Phase 1 standards for model years 2017–2020	Phase 2 standards for model years 2021–2023	Phase 2 standards for model years 2024–2026
Class 7 Low-Roof (all cab styles)	107	104	105.5	99.8
Class 7 Mid-Roof (all cab styles)	119	115	113.2	107.1
Class 7 High-Roof (all cab styles)	124	120	113.5	106.6
Class 8 Low-Roof Day Cab	81	80	80.5	76.2
Class 8 Low-Roof Sleeper Cab	68	66	72.3	68.0
Class 8 Mid-Roof Day Cab	88	86	85.4	80.9
Class 8 Mid-Roof Sleeper Cab	76	73	78.0	73.5
Class 8 High-Roof Day Cab	92	89	85.6	80.4
Class 8 High-Roof Sleeper Cab	75	72	75.7	70.7
Heavy-Haul Tractors			52.4	50.2

* * * * *

(f) * * *

(2) You may optionally certify Class 7 tractors not covered by paragraph (f)(1) of this section to the standards and useful life for Class 8 tractors. This paragraph (f)(2) applies equally for hybrid vehicles, battery electric vehicles, and fuel cell electric vehicles. Credit provisions apply as follows:

(i) If you certify all your Class 7 tractors to Class 8 standards, you may use these Heavy HDV credits without restriction.

* * * * *

§ 1037.107 [Removed]

■ 49. Remove § 1037.107.

■ 50. Amend § 1037.115 by revising paragraphs (a) and (e)(1) and adding paragraph (f) to read as follows:

§ 1037.115 Other requirements.

* * * * *

(a) *Adjustable parameters.* Vehicles that have adjustable parameters must meet all the requirements of this part for any adjustment in the practically adjustable range. We may require that you set adjustable parameters to any specification within the practically adjustable range during any testing. See 40 CFR 1068.50 for general provisions related to adjustable parameters. You must ensure safe vehicle operation throughout the practically adjustable range of each adjustable parameter, including consideration of production tolerances. Note that adjustable roof fairings are deemed not to be adjustable parameters.

* * * * *

(e) * * *

(1) This paragraph (e) is intended to address air conditioning systems for which the primary purpose is to cool the driver compartment. This would generally include all cab-complete pickups and vans. Similarly, it does not apply for self-contained air conditioning used to cool passengers or refrigeration units used to cool cargo on vocational vehicles. For purposes of this paragraph (e), a self-contained system is an enclosed unit with its own evaporator and condenser even if it draws power from the engine.

* * * * *

(f) *Battery durability monitor.* Battery electric vehicles and plug-in hybrid electric vehicles must meet monitoring requirements related to batteries serving as a Rechargeable Energy Storage System from GTR No. 22 (incorporated by reference, see § 1037.810). The requirements of this section apply starting in model year 2030. The following clarifications and adjustments to GTR No. 22 apply for vehicles subject to this section:

(1) Install a customer-accessible display that monitors, estimates, and communicates the vehicle's State of Certified Energy (SOCE) include information in the application for certification as described in § 1037.205. Monitoring requirements related to State of Certified Range (SOCR) do not apply.

(2) Accuracy requirements for SOCE in GTR No. 22 do not apply. Minimum Performance Requirements for battery durability also do not apply.

(3) For battery electric vehicles, use good engineering judgment to develop a test procedure for determining useable battery energy (UBE).

(4) For plug-hybrid electric vehicles, determine UBE as described in 40 CFR 1036.545.

■ 51. Amend § 1037.120 by:

■ a. Revising paragraph (b)(1)(iii).

■ b. Removing paragraph (b)(1)(iv).

■ c. Revising paragraph (c).

The revisions read as follows:

§ 1037.120 Emission-related warranty requirements.

* * * * *

(b) * * *

(1) * * *

(iii) 2 years or 24,000 miles for tires.

* * * * *

(c) *Components covered.* The emission-related warranty covers tires, automatic tire inflation systems, tire pressure monitoring systems, vehicle

speed limiters, idle-reduction systems, devices added to the vehicle to improve aerodynamic performance (not including standard components such as hoods or mirrors even if they have been optimized for aerodynamics), fuel cell stacks, and RESS and other components used with hybrid systems, battery electric vehicles, and fuel cell electric vehicles to the extent such emission-related components are included in your application for certification. The emission-related warranty also covers other added emission-related components to the extent they are included in your application for certification, and any other components whose failure would increase a vehicle's CO_2 emissions. The emission-related warranty covers all components whose failure would increase a vehicle's emissions of air conditioning refrigerants (for vehicles subject to air conditioning leakage standards), and it covers all components whose failure would increase a vehicle's evaporative and refueling emissions (for vehicles subject to evaporative and refueling emission standards). The emission-related warranty covers components that are part of your certified configuration even if another company produces the component.

* * * * *

■ 52. Amend § 1037.130 by revising paragraph (a) to read as follows:

§ 1037.130 Assembly instructions for secondary vehicle manufacturers.

(a) If you sell a certified incomplete vehicle to a secondary vehicle manufacturer, give the secondary vehicle manufacturer instructions for completing vehicle assembly consistent with the requirements of this part. Include all information necessary to ensure that the final vehicle assembly (including the engine) will be in its certified configuration.

* * * * *

■ 53. Amend § 1037.140 by revising paragraph (g)(5) introductory text to read as follows:

§ 1037.140 Classifying vehicles and determining vehicle parameters.

* * * * *

(g) * * *

(5) Heavy-duty vehicles with no installed propulsion engine, such as battery electric vehicles, are divided as follows:

* * * * *

■ 54. Amend § 1037.150 by:

■ a. Revising paragraphs (c), (f) and (p);

■ b. Removing paragraphs (u) through (x);

■ c. Redesignating paragraphs (y) through (bb) as paragraphs (u) through (x);

■ d. Revising newly redesignated paragraph (x); and

■ e. Adding a new paragraph (y).

The revisions and addition read as follows:

§ 1037.150 Interim provisions.

* * * * *

(c) *Small manufacturers.* The following provisions apply for small manufacturers:

(1) The following provisions apply through model year 2026:

(i) The greenhouse gas standards of §§ 1037.105 and 1037.106 are optional for small manufacturers producing vehicles with a date of manufacture before January 1, 2022. In addition, small manufacturers producing vehicles that run on any fuel other than gasoline, E85, or diesel fuel may delay complying with every later standard under this part by one model year.

(ii) Qualifying manufacturers must notify the Designated Compliance Officer each model year before introducing excluded vehicles into U.S. commerce. This notification must include a description of the manufacturer's qualification as a small business under 13 CFR 121.201. Manufacturers must label excluded vehicles with the following statement: ''THIS VEHICLE IS EXCLUDED UNDER 40 CFR 1037.150(c).''

(iii) Small manufacturers may meet Phase 1 standards instead of Phase 2 standards in the first year Phase 2 standards apply to them if they voluntarily comply with the Phase 1 standards for the full preceding year. Specifically, small manufacturers may certify their model year 2022 vehicles to the Phase 1 greenhouse gas standards of §§ 1037.105 and 1037.106 if they certify all the vehicles from their annual production volume included in emission credit calculations for the Phase 1 standards starting on or before January 1, 2021.

(2) The following provisions apply for model year 2027 and later for qualifying small manufacturers:

(i) The following standards apply for vocational vehicles instead of the standards specified in § 1037.105:

TABLE 1 OF PARAGRAPH (c)(2)(i) OF § 1037.150—SMALL MANUFACTURER CO_2 STANDARDS VOCATIONAL VEHICLES

[g/ton-mile]

Engine cycle	Vehicle size	Multi-purpose	Regional	Urban
Compression-ignition	Light HDV	330	291	367
Compression-ignition	Medium HDV	235	218	258
Compression-ignition	Heavy HDV	230	189	269
Spark-ignition	Light HDV	372	319	413
Spark-ignition	Medium HDV	268	247	297

TABLE 2 OF PARAGRAPH (c)(2)(i) OF § 1037.150—SMALL MANUFACTURER CO_2 STANDARDS FOR CUSTOM CHASSIS VOCATIONAL VEHICLES

[g/ton-mile]

Vehicle type [a]	Assigned vehicle service class	MY 2027 and later
School bus	Medium HDV	271
Motor home	Medium HDV	226
Coach bus	Heavy HDV	205
Other bus	Heavy HDV	286
Refuse hauler	Heavy HDV	298
Concrete mixer	Heavy HDV	316
Mixed-use vehicle	Heavy HDV	316

TABLE 2 OF PARAGRAPH (c)(2)(i) OF § 1037.150—SMALL MANUFACTURER CO_2 STANDARDS FOR CUSTOM CHASSIS VOCATIONAL VEHICLES—Continued

[g/ton-mile]

Vehicle type [a]	Assigned vehicle service class	MY 2027 and later
Emergency vehicle	Heavy HDV	319

[a] Vehicle types are generally defined in § 1037.801. "Other bus" includes any bus that is not a school bus or a coach bus. A "mixed-use vehicle" is one that meets at least one of the criteria specified in § 1037.631(a)(1) or (2).

(ii) The following standards apply for tractors instead of the standards specified in § 1037.106:

TABLE 3 OF PARAGRAPH (c)(2)(ii) OF § 1037.150—SMALL MANUFACTURER CO_2 STANDARDS FOR CLASS 7 AND CLASS 8 TRACTORS BY SUBCATEGORY

[g/ton-mile]

Subcategory [a]	Phase 2 standards for model year 2027 and later
Class 7 Low-Roof (all cab styles)	96.2
Class 7 Mid-Roof (all cab styles)	103.4
Class 7 High-Roof (all cab styles)	100.0
Class 8 Low-Roof Day Cab	73.4
Class 8 Low-Roof Sleeper Cab	64.1
Class 8 Mid-Roof Day Cab	78.0
Class 8 Mid-Roof Sleeper Cab	69.6
Class 8 High-Roof Day Cab	75.7
Class 8 High-Roof Sleeper Cab	64.3
Heavy-Haul Tractors	48.3

[a] Subcategory terms are defined in § 1037.801.

(iii) Small manufacturers producing vehicles that run on any fuel other than gasoline, E85, or diesel fuel may delay complying with the model year 2027 standards under this paragraph (c) by one model year.

(iv) Label qualifying vehicles with the following statement: "THIS VEHICLE MEETS PHASE 2 STANDARDS AS ALLOWED UNDER 40 CFR 1037.150(c)."

(v) Small manufacturers may bank emission credits only by certifying all their vehicle families within a given averaging set to the Phase 3 standards that apply for the current model year.

(vi) The battery durability monitor requirements of § 1037.115(f) apply for vehicles subject to standards under this paragraph (c).

(3) See paragraphs (r), (t), (u), and (w) of this section for additional allowances for small manufacturers.

* * * * *

(f) *Testing exemption for qualifying vehicles.* Tailpipe CO_2 emissions from battery electric vehicles, fuel cell electric vehicles, and vehicles with engines fueled with neat hydrogen are deemed to be zero. No CO_2-related testing is required under this part for these vehicles.

* * * * *

(p) *Credit multiplier for advanced technology.* You may calculate credits you generate from vehicles certified with advanced technology as follows:

(1) For Phase 1 vehicles, multiply the credits by 1.50, except that you may not apply this multiplier in addition to the early-credit multiplier of paragraph (a) of this section.

(2) For model year 2026 and earlier, apply multipliers of 3.5 for plug-in hybrid electric vehicles, 4.5 for battery electric vehicles, and 5.5 for fuel cell electric vehicles; calculate credits relative to the Phase 2 standard. In model year 2027, the advanced technology multiplier applies only for fuel cell electric vehicles, with credits multiplied relative to the Phase 3 standard.

* * * * *

(x) *Transition to updated GEM.* (1) Vehicle manufacturers may demonstrate compliance with Phase 2 greenhouse gas standards in model years 2021 through 2023 using GEM Phase 2, Version 3.0, Version 3.5.1, or Version 4.0 (all incorporated by reference, see § 1037.810). Manufacturers may change to a different version of GEM for model years 2022 and 2023 for a given vehicle family after initially submitting an application for certification; such a change must be documented as an amendment under § 1037.225. Manufacturers may submit an end-of-year report for model year 2021 using any of the three regulatory versions of GEM, but only for demonstrating compliance with the custom-chassis standards in § 1037.105(h); such a change must be documented in the report submitted under § 1037.730. Once a manufacturer certifies a vehicle family based on GEM Version 4.0, it may not revert back to using GEM Phase 2, Version 3.0 or Version 3.5.1 for that vehicle family in any model year.

(2) Vehicle manufacturers may certify for model years 2021 through 2023 based on fuel maps from engines or powertrains that were created using GEM Phase 2, Version 3.0, Version 3.5.1, or Version 4.0 (all incorporated by reference, see § 1037.810). Vehicle manufacturers may alternatively certify in those years based on fuel maps from powertrains that were created using GEM Phase 2, Version 3.0, GEM HIL model 3.8, or GEM Phase 2, Version 4.0 (all incorporated by reference, see

§ 1037.810). Vehicle manufacturers may continue to certify vehicles in later model years using fuel maps generated with earlier versions of GEM for model year 2024 and later vehicle families that qualify for using carryover provisions in § 1037.235(d).

(y) *Correcting credit calculations.* If you notify us by October 1, 2024 that errors mistakenly decreased your balance of emission credits for 2020 or any earlier model years, you may correct the errors and recalculate the balance of emission credits after applying a 10 percent discount to the credit correction.

■ 55. Amend § 1037.205 by revising the introductory text, paragraphs (b) introductory text, (b)(6), (e), (o), and (q) to read as follows:

§ 1037.205 What must I include in my application?

This section specifies the information that must be in your application, unless we ask you to include less information under § 1037.201(c). We may require you to provide additional information to evaluate your application. References to testing and emission-data vehicles refer to testing vehicles or components to measure any quantity that serves as an input value for modeling emission rates under § 1037.520.

* * * * *

(b) Explain how the emission control system operates. As applicable, describe in detail all system components for controlling greenhouse gas emissions, including all auxiliary emission control devices (AECDs) and all fuel-system components you will install on any production vehicle. Identify the part number of each component you describe. For this paragraph (b), treat as separate AECDs any devices that modulate or activate differently from each other. Also describe your modeling inputs as described in § 1037.520, with the following additional information if it applies for your vehicles:

* * * * *

(6) If you perform powertrain testing under 40 1036.545, report both CO_2 and NO_X emission levels corresponding to each test run.

* * * * *

(e) Describe any test equipment and procedures that you used, including any special or alternate test procedures you used (see § 1037.501). Include information describing the procedures you used to determine C_dA values as specified in §§ 1037.525 and 1037.527. Describe which type of data you are using for engine fuel maps (see 40 CFR 1036.505).

* * * * *

(o) Report calculated and modeled emission results as for ten configurations. Include modeling inputs and detailed descriptions of how they were derived. Unless we specify otherwise, include the configuration with the highest modeling result, the lowest modeling result, and the configurations with the highest projected sales.

* * * * *

(q) For battery electric vehicles and plug-in hybrid electric vehicles, describe the recharging procedures and methods for determining battery performance, such as state of charge and charging capacity. Also include the certified usable battery energy for each battery durability subfamily.

* * * * *

§ 1037.230 [Amended]

■ 56. Amend § 1037.230 by removing paragraphs (a)(3) and (d)(3).

■ 57. Amend § 1037.231 by revising paragraph (a) to read as follows:

§ 1037.231 Powertrain families.

(a) If you choose to perform powertrain testing as specified in 40 CFR 1036.545, use good engineering judgment to divide your product line into powertrain families that are expected to have similar fuel consumptions and CO_2 emission characteristics throughout the useful life. Your powertrain family is limited to a single model year.

* * * * *

■ 58. Amend § 1037.235 by revising the introductory text, paragraphs (a) and (c)(3) and removing paragraph (g)(3) to read as follows:

§ 1037.235 Testing requirements for certification.

This section describes the emission testing you must perform to show compliance with respect to the greenhouse gas emission standards in subpart B of this part, and to determine any input values from § 1037.520 that involve measured quantities.

(a) Select emission-data vehicles that represent production vehicles and components for the vehicle family consistent with the specifications in §§ 1037.205(o) and 1037.520. Where the test results will represent multiple vehicles or components with different emission performance, use good engineering judgment to select worst-case emission data vehicles or components. In the case of powertrain testing under 40 CFR 1036.545, select a test engine, test hybrid components, test axle and test transmission as applicable, by considering the whole range of vehicle models covered by the powertrain family and the mix of duty cycles specified in § 1037.510. If the powertrain has more than one transmission calibration, for example economy vs. performance, you may weight the results from the powertrain testing in 40 CFR 1036.545 by the percentage of vehicles in the family by prior model year for each configuration. This can be done, for example, through the use of survey data or based on the previous model year's sales volume. Weight the results of $M_{\text{fuel[cycle]}}$

$$\frac{f_{\text{npowertrain}}}{v_{\text{powertrain}}}$$

and $W_{\text{[cycle]}}$ from Table 2 of 40 CFR 1036.545 according to the percentage of vehicles in the family that use each transmission calibration.

* * * * *

(c) * * *

(3) Before we test one of your vehicles or components, we may set its adjustable parameters to any point within the practically adjustable ranges, if applicable.

* * * * *

■ 59. Amend § 1037.241 to read as follows:

§ 1037.241 Demonstrating compliance with exhaust emission standards for greenhouse gas pollutants.

(a) Compliance determinations for purposes of certification depend on whether or not you participate in the ABT program in subpart H of this part.

(1) If none of your vehicle families generate or use emission credits in a given model year, each of your vehicle families is considered in compliance with the CO_2 emission standards in §§ 1037.105 and 1037.106 if all vehicle configurations in the family have calculated or modeled CO_2 emission rates from § 1037.520 that are at or below the applicable standards. A vehicle family is deemed not to comply if any vehicle configuration in the family has a calculated or modeled CO_2 emission rate that is above the applicable standard.

(2) If you generate or use emission credits with one or more vehicle families in a given model year, your vehicle families within an averaging set are considered in compliance with the CO_2 emission standards in §§ 1037.105 and 1037.106 if the sum of positive and negative credits for all vehicle configurations in those vehicle families lead to a zero balance or a positive balance of credits, except as allowed by§ 1037.745. Note that the FEL is considered to be the applicable emission standard for an individual configuration.

(b) We may require you to provide an engineering analysis showing that the performance of your emission controls will not deteriorate during the useful life with proper maintenance. If we determine that your emission controls are likely to deteriorate during the useful life, we may require you to develop and apply deterioration factors consistent with good engineering judgment. For example, you may need to apply a deterioration factor to address deterioration of battery performance for a hybrid vehicle. Where the highest useful life emissions occur between the end of useful life and at the low-hour test point, base deterioration factors for the vehicles on the difference between (or ratio of) the point at which the highest emissions occur and the low-hour test point.

§ 1037.310 [Removed]

■ 60. Remove § 1037.310.

■ 61. Amend § 1037.315 by revising paragraph (a) to read as follows:

§ 1037.315 Audit procedures related to powertrain testing.

(a) For vehicles certified based on powertrain testing as specified in 40 CFR 1036.545, we may apply the selective enforcement audit requirements to the powertrain. If engine manufacturers perform the powertrain testing and include those results in their certification under 40 CFR part 1036, they are responsible for selective enforcement audits related to those results. Otherwise, the certificate holder for the vehicle is responsible for the selective enforcement audit.

* * * * *

■ 62. Amend § 1037.401 by revising paragraph (b) to read as follows:

§ 1037.401 General provisions.

* * * * *

(b) We may measure the drag area of a vehicle you produced after it has been placed into service. We may use any of the procedures as specified in §§ 1037.525 and 1037.527 for measuring drag area. Your vehicle conforms to the regulations of this part with respect to aerodynamic performance if we measure its drag area to be at or below the maximum drag area allowed for the bin to which that configuration was certified.

■ 63. Amend § 1037.501 by revising paragraphs (a) and (h) and removing paragraph (i) to read as follows:

§ 1037.501 General testing and modeling provisions.

* * * * *

(a) Except as specified in subpart B of this part, you must demonstrate that you meet emission standards using emission modeling as described in § 1037.520. This modeling depends on several measured values as described in this subpart F. You may use fuel-mapping information from the engine manufacturer as described in 40 CFR 1036.535 and 1036.540, or you may use powertrain testing as described in 40 CFR 1036.545.

* * * * *

(h) Note that declared GEM inputs for fuel maps and aerodynamic drag area typically includes compliance margins to account for testing variability; for other measured GEM inputs, the declared values are typically the measured values without adjustment.

■ 64. Amend § 1037.510 by:

■ a. Revising paragraphs (a) introductory text, (a)(2) introductory text, and (a)(2)(iii) and (iv);

■ b. In paragraph (b) in Equation 1037.510–1, in the Where entries for $\bar{v}_{moving}$ and $w_{[cycle]}$, removing the text ''table 1 to this section'' and adding, in its place, the text ''table 1 of this section''; and

■ c. Revising paragraphs (c)(3) and (d).

The revisions read as follows:

§ 1037.510 Duty-cycle exhaust testing.

* * * * *

(a) Measure emissions by testing the powertrain on a powertrain dynamometer with the applicable duty cycles. Each duty cycle consists of a series of speed commands over time—variable speeds for the transient test and constant speeds for the highway cruise tests. None of these cycles include vehicle starting or warmup.

* * * * *

(2) Perform cycle-average engine fuel mapping as described in 40 CFR 1036.540. For powertrain testing under 40 CFR 1036.545 or § 1037.555, perform testing as described in this paragraph (a)(2) to generate GEM inputs for each simulated vehicle configuration, and test runs representing different idle conditions. Perform testing as follows:

* * * * *

(iii) *Drive idle.* Perform testing at a loaded idle condition for Phase 2 vocational vehicles. For engines with an adjustable warm idle speed setpoint, test at the minimum warm idle speed and the maximum warm idle speed; otherwise simply test at the engine's warm idle speed. Warm up the powertrain as described in 40 CFR 1036.520(d). Within 60 seconds after concluding the warm-up, linearly ramp the powertrain down to zero vehicle speed over 20 seconds. Apply the brake and keep the transmission in drive (or clutch depressed for manual transmission). Stabilize the powertrain for (60±1) seconds and then sample emissions for (30±1) seconds.

(iv) *Parked idle.* Perform testing at a no-load idle condition for Phase 2 vocational vehicles. For engines with an adjustable warm idle speed setpoint, test at the minimum warm idle speed and the maximum warm idle speed; otherwise simply test at the engine's warm idle speed. Warm up the powertrain as described in 40 CFR 1036.520(d). Within 60 seconds after concluding the warm-up, linearly ramp the powertrain down to zero vehicle speed in 20 seconds. Put the transmission in park (or neutral for manual transmissions and apply the parking brake if applicable). Stabilize the powertrain for (180±1) seconds and then sample emissions for (600±1) seconds.

* * * * *

(c) * * *

(3) Table 1 follows:

TABLE 1 OF PARAGRAPH (c)(3) OF § 1037.510—WEIGHTING FACTORS FOR DUTY CYCLES

	Distance-weighted			Time-weighted [a]			Average speed during non-idle cycles (mi/hr) [b]
	Transient (percent)	55 mi/hr cruise (percent)	65 mi/hr cruise (percent)	Drive idle (percent)	Parked idle (percent)	Non-idle (percent)	
Day Cabs	19	17	64				
Sleeper Cabs	5	9	86				
Heavy-haul Tractors	19	17	64				
Vocational—Regional	20	24	56	0	25	75	38.41
Vocational—Multi-Purpose (2b–7)	54	29	17	17	25	58	23.18
Vocational—Multi-Purpose (8)	54	23	23	17	25	58	23.27
Vocational—Urban (2b–7)	92	8	0	15	25	60	16.25
Vocational—Urban (8)	90	10	0	15	25	60	16.51
Vocational with conventional powertrain (Phase 1 only)	42	21	37				

TABLE 1 OF PARAGRAPH (c)(3) OF § 1037.510—WEIGHTING FACTORS FOR DUTY CYCLES—Continued

	Distance-weighted			Time-weighted [a]			Average speed during non-idle cycles (mi/hr) [b]
	Transient (percent)	55 mi/hr cruise (percent)	65 mi/hr cruise (percent)	Drive idle (percent)	Parked idle (percent)	Non-idle (percent)	
Vocational Hybrid Vehicles (Phase 1 only) ..	75	9	16	.....	.....	.....	.....

[a] Note that these drive idle and non-idle weighting factors do not reflect additional drive idle that occurs during the transient cycle. The transient cycle does not include any parked idle.
[b] These values apply even for vehicles not following the specified speed traces.

* * * * *

(d) For highway cruise and transient testing, compare actual second-by-second vehicle speed with the speed specified in the test cycle and ensure any differences are consistent with the criteria as specified in 40 CFR 1036.545(g)(1). If the speeds do not conform to these criteria, the test is not valid and must be repeated.

* * * * *

§ 1037.515 [Removed]

■ 65. Remove § 1037.515.

■ 66. Amend § 1037.520 by revising the introductory text and paragraphs (a)(2) introductory text, (b)(3), (e)(1) and (3), (g)(4), and (j)(1) to read as follows:

§ 1037.520 Modeling CO_2 emissions to show compliance for vocational vehicles and tractors.

This section describes how to use the Greenhouse gas Emissions Model (GEM) to show compliance with the CO_2 standards of §§ 1037.105 and 1037.106 for vocational vehicles and tractors. Use GEM version 2.0.1 to demonstrate compliance with Phase 1 standards; use GEM Phase 2, Version 4.0 to demonstrate compliance with Phase 2 and Phase 3 standards (both incorporated by reference, see § 1037.810). Use good engineering judgment when demonstrating compliance using GEM.

(a) * * *

(2) For Phase 2 and Phase 3 vehicles, the GEM inputs described in paragraphs (a)(1)(i) through (v) of this section continue to apply. Note that the provisions in this part related to vehicle speed limiters and automatic engine shutdown systems are available for vocational vehicles in Phase 2 and Phase 3. The rest of this section describes additional GEM inputs for demonstrating compliance with Phase 2 and Phase 3 standards. Simplified versions of GEM apply for limited circumstances as follows:

(b) * * *

(3) For Phase 2 and Phase 3 tractors other than heavy-haul tractors, determine bin levels and C_dA inputs as follows:

(i) Determine bin levels for high-roof tractors based on aerodynamic test results as specified in § 1037.525 and summarized in the following table:

TABLE 3 TO PARAGRAPH (b)(3)(i) OF § 1037.520—BIN DETERMINATIONS FOR PHASE 2 AND PHASE 3 HIGH-ROOF TRACTORS BASED ON AERODYNAMIC TEST RESULTS

[C_dA in m^2]

Tractor type	Bin I	Bin II	Bin III	Bin IV	Bin V	Bin VI	Bin VII
Day Cabs	≥7.2	6.6–7.1	6.0–6.5	5.5–5.9	5.0–5.4	4.5–4.9	≤4.4
Sleeper Cabs	≥6.9	6.3–6.8	5.7–6.2	5.2–5.6	4.7–5.1	4.2–4.6	≤4.1

(ii) For low- and mid-roof tractors, you may either use the same bin level that applies for an equivalent high-roof tractor as shown in Table 3 of this section, or you may determine your bin level based on aerodynamic test results as described in Table 4 of this section.

TABLE 4 TO PARAGRAPH (b)(3)(ii) OF § 1037.520—BIN DETERMINATIONS FOR PHASE 2 AND PHASE 3 LOW-ROOF AND MID-ROOF TRACTORS BASED ON AERODYNAMIC TEST RESULTS

[C_dA in m^2]

Tractor type	Bin I	Bin II	Bin III	Bin IV	Bin V	Bin VI	Bin VII
Low-Roof Cabs	≥5.4	4.9–5.3	4.5–4.8	4.1–4.4	3.8–4.0	3.5–3.7	≤3.4
Mid-Roof Cabs	≥5.9	5.5–5.8	5.1–5.4	4.7–5.0	4.4–4.6	4.1–4.3	≤4.0

(iii) Determine the C_dA input according to the tractor's bin level as described in the following table:

TABLE 5 TO PARAGRAPH (b)(3)(iii) OF § 1037.520—PHASE 2 AND PHASE 3 C_dA TRACTOR INPUTS BASED ON BIN LEVEL

Tractor type	Bin I	Bin II	Bin III	Bin IV	Bin V	Bin VI	Bin VII
High-Roof Day Cabs	7.45	6.85	6.25	5.70	5.20	4.70	4.20
High-Roof Sleeper Cabs	7.15	6.55	5.95	5.40	4.90	4.40	3.90
Low-Roof Cabs	6.00	5.60	5.15	4.75	4.40	4.10	3.80
Mid-Roof Cabs	7.00	6.65	6.25	5.85	5.50	5.20	4.90

* * * * *

(e) * * *

(1) Vehicle weight reduction inputs for wheels are specified relative to dual-wide tires with conventional steel wheels. For purposes of this paragraph (e)(1), an aluminum alloy qualifies as light-weight if a dual-wide drive wheel made from this material weighs at least 21 pounds less than a comparable conventional steel wheel. The inputs are listed in Table 6 of this section. For example, a tractor or vocational vehicle with aluminum steer wheels and eight (4 × 2) dual-wide aluminum drive wheels would have an input of 210 pounds (2 × 21 + 8 × 21).

TABLE 6 TO § 1037.520—WHEEL-RELATED WEIGHT REDUCTIONS

Tire type	Material	Weight reduction—Phase 1 (pounds per wheel)	Weight reduction—Phase 2 and Phase 3 (pounds per wheel)
Wide-Base Single Drive Tire with . . .[a]	Steel Wheel	84	84
	Aluminum Wheel	139	147
	Light-Weight Aluminum Alloy Wheel	147	147
Steer Tire or Dual-wide Drive Tire with . . .	High-Strength Steel Wheel	8	8
	Aluminum Wheel	21	25
	Light-Weight Aluminum Alloy Wheel	30	25

[a] The weight reduction for wide-base tires accounts for reduced tire weight relative to dual-wide tires.

* * * * *

(3) Weight-reduction inputs for vocational-vehicle components other than wheels are specified in the following table:

TABLE 8 TO § 1037.520—NONWHEEL-RELATED WEIGHT REDUCTIONS FROM ALTERNATIVE MATERIALS FOR PHASE 2 AND PHASE 3 VOCATIONAL VEHICLES

[pounds] [a]

Component	Material	Vehicle type		
		Light HDV	Medium HDV [b]	Heavy HDV
Axle Hubs—Non-Drive	Aluminum	40		40
Axle Hubs—Non-Drive	High Strength Steel	5		5
Axle—Non-Drive	Aluminum	60		60
Axle—Non-Drive	High Strength Steel	15		15
Brake Drums—Non-Drive	Aluminum	60		60
Brake Drums—Non-Drive	High Strength Steel	42		42
Axle Hubs—Drive	Aluminum	40		80
Axle Hubs—Drive	High Strength Steel	10		20
Brake Drums—Drive	Aluminum	70		140
Brake Drums—Drive	High Strength Steel	37		74
Suspension Brackets, Hangers	Aluminum	67		100
Suspension Brackets, Hangers	High Strength Steel	20		30
Crossmember—Cab	Aluminum	10	15	15
Crossmember—Cab	High Strength Steel	2	5	5
Crossmember—Non-Suspension	Aluminum	15	15	15
Crossmember—Non-Suspension	High Strength Steel	5	5	5
Crossmember—Suspension	Aluminum	15	25	25
Crossmember—Suspension	High Strength Steel	6	6	6
Driveshaft	Aluminum	12	40	50
Driveshaft	High Strength Steel	5	10	12
Frame Rails	Aluminum	120	300	440
Frame Rails	High Strength Steel	40	40	87

[a] Weight-reduction values apply per vehicle unless otherwise noted.
[b] For Medium HDV with 6 × 4 or 6 × 2 axle configurations, use the values for Heavy HDV.

* * * * *

* * * * *

(g) * * *

(4) GEM inputs associated with powertrain testing include powertrain family, transmission calibration identifier, test data from 40 CFR 1036.545, and the powertrain test configuration (dynamometer connected to transmission output or wheel hub). You do not need to identify or provide inputs for transmission gear ratios, fuel map data, or engine torque curves, which would otherwise be required under paragraph (f) of this section.

* * * * *

(j) * * *

(1) *Intelligent controls*. Enter 2 for tractors with predictive cruise control. This includes any cruise control system that incorporates satellite-based global-positioning data for controlling operator demand. For tractors without predictive cruise control and for all vocational vehicles, enter 1.5 if they have neutral coasting or full cylinder deactivation when coasting, unless good engineering judgment indicates that a lower percentage should apply.

* * * * *

■ 67. Amend § 1037.525 by revising paragraphs (a) introductory text, (b)(1), (4), and (5), (c)(1) introductory text, and (c)(2) introductory text to read as follows:

§ 1037.525 Aerodynamic measurements for tractors.

* * * * *

(a) *General provisions*. The GEM input for a tractor's aerodynamic performance is a C_d value for Phase 1 and a C_dA value for Phase 2 and Phase 3. The input value is measured or calculated for a tractor in a specific test configuration with a trailer, such as a high-roof tractor with a box van meeting the requirements for the standard trailer.

* * * * *

(b) * * *

(1) Determine the functional relationship between your alternate method and coastdown testing. Specify this functional relationship as $F_{\text{alt-aero}}$ for a given alternate drag measurement method. The effective yaw angle, ψ_{eff}, is assumed to be zero degrees for Phase 1. For Phase 2 and Phase 3, determine Ψ_{eff} from coastdown test results using the following equation:

$$F_{\text{alt-aero}} = \frac{C_d A_{\text{coastdown}}(\psi_{\text{eff}})}{C_d A_{\text{alt}}(\psi_{\text{eff}})}$$

Eq. 1037.525-1

Where:

$C_dA_{\text{coastdown}}(\psi_{\text{eff}})$ = the average drag area measured during coastdown at an effective yaw angle, ψ_{eff}.

$C_dA_{\text{alt}}(\psi_{\text{eff}})$ = the average drag area calculated from an alternate drag measurement method at an effective yaw angle, ψ_{eff}.

* * * * *

(4) Measure the drag area using your alternate method for a Phase 2 and Phase 3 tractor used to determine $F_{\text{alt-aero}}$ with testing at yaw angles of 0°, ±1°, ±3°, ±4.5°, ±6°, and ±9° (you may include additional angles), using direction conventions described in Figure 2 of SAE J1252 (incorporated by reference, see § 1037.810). Also, determine the drag area at the coastdown effective yaw angle, $C_dA_{\text{alt}}(\psi_{\text{eff}})$, by taking the average drag area at ψ_{eff} and $-\psi_{\text{eff}}$ for your vehicle using the same alternate method.

(5) For Phase 2 and Phase 3 testing, determine separate values of $F_{\text{alt-aero}}$ for at least one high-roof day cab and one high-roof sleeper cab for model year 2021, at least two high-roof day cabs and two high-roof sleeper cabs for model year 2024, and at least three high-roof day cabs and three high-roof sleeper cabs for model year 2027. These test requirements are cumulative; for example, you may meet these requirements by testing two vehicles to support model year 2021 certification and four additional vehicles to support model year 2023 certification. For any untested tractor models, apply the value of $F_{\text{alt-aero}}$ from the tested tractor model that best represents the aerodynamic characteristics of the untested tractor model, consistent with good engineering judgment. Testing under this paragraph (b)(5) continues to be valid for later model years until you change the tractor model in a way that causes the test results to no longer represent production vehicles. You must also determine unique values of $F_{\text{alt-aero}}$ for low-roof and mid-roof tractors if you determine C_dA values based on low or mid-roof tractor testing as shown in Table 4 of § 1037.520. For Phase 1 testing, if good engineering judgment allows it, you may calculate a single, constant value of $F_{\text{alt-aero}}$ for your whole product line by dividing the coastdown drag area, $C_dA_{\text{coastdown}}$, by drag area from your alternate method, C_dA_{alt}.

* * * * *

(c) * * *

(1) Apply the following method for all Phase 2 and Phase 3 testing with an alternate method:

* * * * *

(2) Apply the following method for Phase 2 and Phase 3 coastdown testing other than coastdown testing used to establish $F_{\text{alt-aero}}$:

* * * * *

§ 1037.526 [Removed]

■ 68. Remove § 1037.526.

■ 69. Revise § 1037.527 to read as follows:

§ 1037.527 Aerodynamic measurements for vocational vehicles.

This section describes a methodology for determining vocational vehicle aerodynamic input values for as described in § 1037.520. This measurement is optional. A vocational vehicle's aerodynamic performance is based on a ΔC_dA value relative to a baseline vehicle. Determine a ΔC_dA value by performing A to B testing as follows:

(a) Determine a baseline C_dA value for a vehicle representing a production configuration without the aerodynamic improvement. Repeat this testing and measure C_dA for a vehicle with the improved aerodynamic design.

(b) Use good engineering judgment to perform paired tests that accurately demonstrate the reduction in aerodynamic drag associated with the improved design.

(c) Measure C_dA in m^2 to two decimal places. Calculate ΔC_dA by subtracting the drag area for the test vehicle from the drag area for the baseline vehicle.

■ 70. Amend § 1037.528 by:

■ a. Revising the introductory text, paragraphs (b) introductory text and (h)(5)(iv);

■ b. Removing paragraph (h)(7);

■ c. Redesignating paragraphs (h)(8) through (12) as paragraphs (h)(7) through (11); and

■ d. Revising newly redesignated paragraph (h)(10).

The revisions read as follows:

§ 1037.528 Coastdown procedures for calculating drag area (C_dA).

The coastdown procedures in this section describe how to calculate drag area, C_dA, for Phase 2 and Phase 3 tractors and vocational vehicles, subject to the provisions of §§ 1037.525 and 1037.527. These procedures are considered the reference method for tractors. Follow the provisions of Sections 1 through 9 of SAE J2263 (incorporated by reference, see § 1037.810), with the clarifications and exceptions described in this section. Several of these exceptions are from SAE J1263 (incorporated by reference, see § 1037.810). The coastdown procedures in 40 CFR 1066.310 apply instead of the provisions of this section for Phase 1 tractors.

* * * * *

(b) To determine C_dA values for a tractor, perform coastdown testing with a tractor-trailer combination using the manufacturer's tractor and a standard

trailer. Prepare the vehicles for testing as follows:

* * * * *

(h) * * *

(5) * * *

(iv) Calculate ΔF_{spin} using the following equation:

$$\Delta F_{spin} = F_{spinhi} - F_{spinlo}$$

Eq. 1037.528-10

Example:

$\Delta F_{spin} = 129.7 - 52.7$

$\Delta F_{spin} = 77.0$ N

* * * * *

(10) Calculate drag area, C_dA, in m² for each high-speed segment using the following equation, expressed to at least three decimal places:

$$C_dA = \frac{2 \cdot (F_{hi} - F_{lo,pair} - \Delta F_{spin} - \Delta F_{TRR})}{(\bar{v}^2_{air,hi} - \bar{v}^2_{air,lo,pair})} \cdot \frac{R \cdot \bar{T}}{\bar{p}_{act}}$$

Eq. 1037.528-16

Where:

F_{hi} = road load force at high speed determined from Eq. 1037.528–7.

$F_{lo,pair}$ = the average of F_{lo} values for a pair of opposite direction runs calculated as described in paragraph (h)(9) of this section.

ΔF_{spin} = the difference in drive-axle spin loss force between high-speed and low-speed coastdown segments. This is described in paragraph (h)(5) of this section for tractor testing.

ΔF_{TRR} = the difference in tire rolling resistance force between high-speed and low-speed coastdown segments as described in paragraph (h)(6) of this section.

$\bar{v}^2_{air,lo,pair}$ = the average of $\bar{v}^2_{air,lo}$ values for a pair of opposite direction runs calculated as described in paragraph (h)(9) of this section.

R = specific gas constant = 287.058 J/(kg·K).

$\bar{T}$ = mean air temperature expressed to at least one decimal Place.

$\bar{p}_{act}$ = mean absolute air pressure expressed to at least one decimal place.

Example:

F_{hi} = 4645.5 N

$F_{lo,pair}$ = 1005.0 N

ΔF_{spin} = 77.0 N

ΔF_{TRR} = 187.4 N

$\bar{v}^2_{air,hi}$ = 933.4 m²/s²

$\bar{v}^2_{air,lo,pair}$ = 43.12 m²/s²

R = 287.058 J/(kg·K)

$\bar{T}$ = 285.97 K

$\bar{p}_{act}$ = 101.727 kPa = 101727 Pa

$$C_dA = \frac{2 \cdot (4640.5 - 1005.0 - 77.0 - 187.4)}{(933.4 - 43.12)} \cdot \frac{287.058 \cdot 285.97}{101727}$$

C_dA = 6.120 m²

* * * * *

■ 71. Amend § 1037.530 by revising the introductory text, paragraphs (a) introductory text, (c), and (d) introductory text to read as follows:

§ 1037.530 Wind-tunnel procedures for calculating drag area (C_dA).

The wind-tunnel procedure specified in this section is an alternate procedure for tractors.

(a) You may measure drag areas consistent with published SAE procedures as described in this section using any wind tunnel recognized by the Subsonic Aerodynamic Testing Association, subject to the provisions of §§ 1037.525 and 1037.527. If your wind tunnel does not meet the specifications described in this section, you may ask us to approve it as an alternate method under § 1037.525(d). All wind tunnels and wind tunnel tests must meet the specifications described in SAE J1252 (incorporated by reference, see § 1037.810), with the following exceptions and additional provisions:

* * * * *

(c) To determine C_dA values for certifying tractors, perform wind-tunnel testing with a tractor-trailer combination using the manufacturer's tractor and a standard trailer. Use a moving/rolling floor if the facility has one. For Phase 1 tractors, conduct the wind tunnel tests at a zero yaw angle. For Phase 2 and Phase 3 vehicles, conduct the wind tunnel tests by measuring the drag area at yaw angles of +4.5° and −4.5° and calculating the average of those two values.

(d) In your request to use wind-tunnel testing for tractors, describe how you meet all the specifications that apply under this section, using terminology consistent with SAE J1594 (incorporated by reference, see § 1037.810). If you request our approval to use wind-tunnel testing even though you do not meet all the specifications of this section, describe how your method nevertheless qualifies as an alternate method under § 1037.525(d) and include all the following information:

* * * * *

■ 72. Amend § 1037.532 by revising the introductory text, paragraphs (a) introductory text, (b), and (c) introductory text to read as follows:

§ 1037.532 Using computational fluid dynamics to calculate drag area (CdA).

This section describes how to use commercially available computational fluid dynamics (CFD) software to determine C_dA values, subject to the provisions of §§ 1037.525 and 1037.527. This is considered to be an alternate method for tractors.

(a) For Phase 2 and Phase 3 vehicles, use SAE J2966 (incorporated by

reference, see § 1037.810), with the following clarifications and exceptions:

* * * * *

(b) For Phase 1 tractors, apply the procedures as specified in paragraphs (c) through (f) of this section. Paragraphs (c) through (f) of section apply for Phase 2 and Phase 3 vehicles only as specified in paragraph (a) of this section.

(c) To determine C_dA values for certifying a tractor, perform CFD modeling based on a tractor-trailer combination using the manufacturer's tractor and a standard trailer. Perform all CFD modeling as follows:

* * * * *

■ 73. Amend § 1037.540 by:

■ a. Revising the introductory text and paragraphs (c)(2) and (5), (d)(4), and (f) introductory text; and

■ b. In paragraph (f)(3), by removing the text ''the approved utility factor curve'' and adding, in its place, the text ''the utility factor curve in appendix E of this part''.

The revisions read as follows:

§ 1037.540 Special procedures for testing vehicles with hybrid power take-off.

This section describes optional procedures for quantifying the reduction in greenhouse gas emissions for vehicles as a result of running power take-off (PTO) devices with a hybrid energy delivery system. See 40 CFR 1036.545 for powertrain testing requirements that apply for drivetrain hybrid systems. The procedures are written to test the PTO by ensuring that the engine produces all of the energy with no net change in stored energy (charge-sustaining), and for plug-in hybrid electric vehicles, also allowing for drawing down the stored energy (charge-depleting). The full charge-sustaining test for the hybrid vehicle is from a fully charged rechargeable energy storage system (RESS) to a depleted RESS and then back to a fully charged RESS. You must include all hardware for the PTO system. You may ask us to modify the provisions of this section to allow testing hybrid vehicles that use a technology other than batteries for storing energy, consistent with good engineering judgment. For plug-in hybrid electric vehicles, use a utility factor to properly weight charge-sustaining and charge-depleting operation as described in paragraph (f)(3) of this section.

* * * * *

(c) * * *

(2) Prepare the vehicle for testing by operating it as needed to stabilize the RESS at a full state of charge (or equivalent for vehicles that use a technology other than batteries for storing energy).

* * * * *

(5) Operate the vehicle over one or both of the denormalized PTO duty cycles without turning the vehicle off, until the engine starts and then shuts down. This may require running multiple repeats of the PTO duty cycles. For systems that are not plug-in hybrid systems, the test cycle is completed once the engine shuts down. For plug-in hybrid systems, continue running until the PTO hybrid is running in a charge-sustaining mode such that the ''End of Test'' requirements defined in 40 CFR 1066.501 are met. Measure emissions as described in paragraph (b)(7) of this section. Use good engineering judgment to minimize the variability in testing between the two types of vehicles.

* * * * *

(d) * * *

(4) Divide the total PTO operating time from paragraph (d)(3) of this section by a conversion factor of 0.0144 hr/mi for Phase 1 and 0.0217 hr/mi for Phase 2 and Phase 3 to determine the equivalent distance driven. The conversion factors are based on estimates of average vehicle speed and PTO operating time as a percentage of total engine operating time; the Phase 2 and Phase 3 conversion factor is calculated from an average speed of 27.1 mi/hr and PTO operation 37% of engine operating time, as follows:

$$Factor = \frac{37\%}{(100\% - 37\%) \cdot 27.1\text{mi/hr}} = 0.0217\text{hr/mi}$$

* * * * *

(f) For Phase 2 and Phase 3, calculate the delta PTO fuel results for input into GEM during vehicle certification as follows:

* * * * *

§ 1037.550—[Removed]

■ 74. Remove § 1037.550.

■ 75. Amend § 1037.551 by revising the introductory text and paragraphs (b) and (c) to read as follows:

§ 1037.551 Engine-based simulation of powertrain testing.

40 CFR 1036.545 describes how to measure fuel consumption over specific duty cycles with an engine coupled to a transmission; 40 CFR 1036.545(a)(5) describes how to create equivalent duty cycles for repeating those same measurements with just the engine. This § 1037.551 describes how to perform this engine testing to simulate the powertrain test. These engine-based measurements may be used for selective enforcement audits as described in § 1037.301, as long as the test engine's operation represents the engine operation observed in the powertrain test. If we use this approach for confirmatory testing, when making compliance determinations, we will consider the uncertainty associated with this approach relative to full powertrain testing. Use of this approach for engine SEAs is optional for engine manufacturers.

* * * * *

(b) Operate the engine over the applicable engine duty cycles corresponding to the vehicle cycles specified in § 1037.510(a)(2) for powertrain testing over the applicable vehicle simulations described in 40 CFR 1036.545(j). Warm up the engine to prepare for the transient test or one of the highway cruise cycles by operating it one time over one of the simulations of the corresponding duty cycle. Warm up the engine to prepare for the idle test by operating it over a simulation of the 65-mi/hr highway cruise cycle for 600 seconds. Within 60 seconds after concluding the warm up cycle, start emission sampling while the engine operates over the duty cycle. You may perform any number of test runs directly in succession once the engine is warmed up. Perform cycle validation as described in 40 CFR 1065.514 for engine speed, torque, and power.

(c) Calculate the mass of fuel consumed as described in 40 CFR 1036.545(n) and (o). Correct each measured value for the test fuel's mass-specific net energy content as described in 40 CFR 1036.550. Use these corrected values to determine whether the engine's emission levels conform to the declared fuel-consumption rates from the powertrain test.

■ 76. Amend § 1037.555 by revising the introductory text to read as follows:

§ 1037.555 Special procedures for testing Phase 1 hybrid systems.

This section describes a powertrain testing procedure for simulating a chassis test with a pre-transmission or

post-transmission hybrid system to perform A to B testing of Phase 1 vehicles. These procedures may also be used to perform A to B testing with non-hybrid systems. See 40 CFR 1036.545 for Phase 2 and Phase 3 hybrid systems.

* * * * *

■ 77. Amend § 1037.560 by revising paragraph (e)(2) to read as follows:

§ 1037.560 Axle efficiency test.

* * * * *

(e) * * *

(2) Maintain gear oil temperature at (81 to 83) °C. You may alternatively specify a lower range by shifting both temperatures down by the same amount for all test points or on a test point by test point basis. We will test your axle assembly using the same temperature range you specify for your testing. You may use an external gear oil conditioning system, as long as it does not affect measured values.

* * * * *

■ 78. Amend § 1037.601 by revising paragraph (b) to read as follows:

§ 1037.601 General compliance provisions.

* * * * *

(b) Vehicles exempted from the applicable standards of 40 CFR part 86 or part 1036 other than glider vehicles are exempt from the standards of this part without request. Similarly, vehicles other than glider vehicles are exempt without request if the installed engine is exempted from the applicable standards in 40 CFR part 86 or part 1036.

* * * * *

■ 79. Amend § 1037.610 by revising paragraph (f)(2) to read as follows:

§ 1037.610 Vehicles with off-cycle technologies.

* * * * *

(f) * * *

(2) For model years 2021 and later, you may not rely on an approval for model years before 2021. You must separately request our approval before applying an improvement factor or credit under this section for Phase 2 and Phase 3 vehicles, even if we approved an improvement factor or credit for similar vehicle models before model year 2021. Note that Phase 2 and Phase 3 approval may carry over for multiple years.

* * * * *

■ 80. Amend § 1037.615 by revising paragraphs (a) and (d) through (g) to read as follows:

§ 1037.615 Advanced technologies.

(a) This section describes how to calculate emission credits for advanced technologies. You may calculate Phase 1 advanced technology credits through model year 2020 for hybrid vehicles with regenerative braking, vehicles equipped with Rankine-cycle engines, battery electric vehicles, and fuel cell vehicles. You may calculate Phase 2 advanced technology credits through model year 2026 for plug-in hybrid electric vehicles, battery electric vehicles, and fuel cell vehicles. You may calculate Phase 3 advanced technology credits for model year 2027 for fuel cell vehicles. You may not generate credits for Phase 1 engine technologies for which the engines generate credits under 40 CFR part 1036.

* * * * *

(d) For Phase 2 and Phase 3 plug-in hybrid electric vehicles and for fuel cells powered by any fuel other than hydrogen, calculate CO_2 credits using an FEL based on emission measurements from powertrain testing. Phase 2 and Phase 3 advanced technology credits do not apply for hybrid vehicles that have no plug-in capability.

(e) [Reserved]

(f) For battery electric vehicles and for fuel cell electric vehicles, calculate CO_2 credits using an FEL of 0 g/ton-mile. Note that these vehicles are subject to compression-ignition standards for CO_2.

(g) As specified in subpart H of this part, advanced-technology credits generated from Phase 1 vehicles under this section may be used under this part 1037 outside of the averaging set in which they were generated, or they may be used under 40 CFR part 86, subpart S, or 40 CFR part 1036. Advanced-technology credits generated from Phase 2 and Phase 3 vehicles are subject to all the averaging-set restrictions that apply to other emission credits.

* * * * *

§ 1037.620 [Amended]

■ 81. Amend § 1037.620 by removing paragraph (c) and redesignating paragraphs (d) through (f) as paragraphs (c) through (e).

■ 82. Amend § 1037.622 by revising the introductory text and paragraph (d)(5) to read as follows:

§ 1037.622 Shipment of partially complete vehicles to secondary vehicle manufacturers.

This section specifies how manufacturers may introduce partially complete vehicles into U.S. commerce (or in the case of certain custom vehicles, introduce complete vehicles into U.S. commerce for modification by a small manufacturer). The provisions of this section are intended to accommodate normal business practices without compromising the effectiveness of certified emission controls. You may not use the provisions of this section to circumvent the intent of this part. For vehicles subject to both exhaust greenhouse gas and evaporative standards, the provisions of this part apply separately for each certificate.

* * * * *

(d) * * *

(5) The provisions of this paragraph (d) may apply separately for vehicle greenhouse gas, evaporative, and refueling emission standards.

* * * * *

■ 83. Amend§ 1037.630 by revising paragraphs (a)(1)(iii) and (c) to read as follows:

§ 1037.630 Special purpose tractors.

(a) * * *

(1) * * *

(iii) Model year 2020 and earlier tractors with a gross combination weight rating (GCWR) at or above 120,000 pounds. Note that Phase 2 and Phase 3 tractors meeting the definition of ''heavy-haul'' in § 1037.801 must be certified to the heavy-haul standards in §§ 1037.106 or 1037.670.

* * * * *

(c) *Production limit.* No manufacturer may produce more than 21,000 Phase 1 vehicles under this section in any consecutive three model year period. This means you may not exceed 6,000 in a given model year if the combined total for the previous two years was 15,000. The production limit applies with respect to all Class 7 and Class 8 Phase 1 tractors certified or exempted as vocational tractors. No production limit applies for tractors subject to Phase 2 and Phase 3 standards.

* * * * *

■ 84. Amend § 1037.631 by revising paragraph (a) introductory text to read as follows:

§ 1037.631 Exemption for vocational vehicles intended for off-road use.

* * * * *

(a) *Qualifying criteria.* Vocational vehicles intended for off-road use are exempt without request, subject to the provisions of this section, if they are primarily designed to perform work off-road (such as in oil fields, mining, forests, or construction sites), and they meet at least one of the criteria of paragraph (a)(1) of this section and at least one of the criteria of paragraph (a)(2) of this section. See § 1037.105(h) for alternate Phase 2 and Phase 3 standards that apply for vehicles meeting only one of these sets of criteria.

* * * * *

■ 85. Amend § 1037.635 by revising paragraph (b)(1) to read as follows:

§ 1037.635 Glider kits and glider vehicles.

* * * * *

(b) * * *

(1) The engine must meet the greenhouse gas standards of 40 CFR part 1036 that apply for the engine model year corresponding to the vehicle's date of manufacture. For example, for a vehicle with a 2024 date of manufacture, the engine must meet the greenhouse gas standards that apply for model year 2024.

* * * * *

■ 86. Amend § 1037.640 by revising the introductory text to read as follows:

§ 1037.640 Variable vehicle speed limiters.

This section specifies provisions that apply for vehicle speed limiters (VSLs) that you model under § 1037.520. This does not apply for VSLs that you do not model under § 1037.520. (e) This section is written to apply for tractors; however, you may use good engineering judgment to apply equivalent adjustments for Phase 2 and Phase 3 vocational vehicles with vehicle speed limiters.

* * * * *

■ 87. Amend § 1037.660 by revising paragraphs (a)(1)(iv), (2), and (3) to read as follows:

§ 1037.660 Idle-reduction technologies.

* * * * *

(a) * * *

(1) * * *

(iv) For Phase 2 and Phase 3 tractors, you may identify AES systems as ''adjustable'' if, before delivering to the ultimate purchaser, you enable authorized dealers to modify the vehicle in a way that disables the AES system or makes the threshold inactivity period longer than 300 seconds. However, the vehicle may not be delivered to the ultimate purchaser with the AES system disabled or the threshold inactivity period set longer than 300 seconds. You may allow dealers or repair facilities to make such modifications; this might involve password protection for electronic controls, or special tools that only you provide. Any dealers making any modifications before delivery to the ultimate purchaser must notify you, and you must account for such modifications in your production and ABT reports after the end of the model year. Dealers failing to provide prompt notification are in violation of the tampering prohibition of 40 CFR 1068.101(b)(1). Dealer notifications are deemed to be submissions to EPA. Note that these adjustments may not be made if the AES system was not ''adjustable'' when first delivered to the ultimate purchaser.

* * * * *

(2) *Neutral idle*. Phase 2 and Phase 3 vehicles with hydrokinetic torque converters paired with automatic transmissions qualify for neutral-idle credit in GEM modeling if the transmission reduces torque equivalent to shifting into neutral throughout the interval during which the vehicle's brake pedal is depressed and the vehicle is at a zero-speed condition (beginning within five seconds of the vehicle reaching zero speed with the brake depressed). If a vehicle reduces torque partially but not enough to be equivalent to shifting to neutral, you may use the provisions of § 1037.610(g) to apply for an appropriate partial emission reduction; this may involve A to B testing with the powertrain test procedure in 40 CFR 1036.545 or the spin-loss portion of the transmission efficiency test in § 1037.565.

(3) *Stop-start*. Phase 2 and Phase 3 vocational vehicles qualify for stop-start reduction in GEM modeling if the engine shuts down no more than 5 seconds after the vehicle's brake pedal is depressed when the vehicle is at a zero-speed condition.

* * * * *

■ 88. Amend § 1037.665 by revising paragraphs (a)(1) and (d) to read as follows:

§ 1037.665 Production and in-use tractor testing.

* * * * *

(a) * * *

(1) Each calendar year, select for testing three sleeper cabs and two day cabs certified to Phase 1 or Phase 2 or Phase 3 standards. If we do not identify certain vehicle configurations for your testing, select models that you project to be among your 12 highest-selling vehicle configurations for the given year.

* * * * *

(d) Greenhouse gas standards do not apply with respect to testing under this section. Note however that NTE standards apply for any qualifying operation that occurs during the testing in the same way that it would during any other in-use testing.

■ 89. Amend § 1037.670 by revising paragraph (a) to read as follows:

§ 1037.670 Optional CO_2 emission standards for tractors at or above 120,000 pounds GCWR.

(a) You may certify tractors at or above 120,000 pounds GCWR to the following CO_2 standards instead of the Phase 2 CO_2 standards of § 1037.106:

TABLE 1 OF PARAGRAPH (a) OF § 1037.670—OPTIONAL CO_2 STANDARDS FOR MODEL YEAR 2026 AND EARLIER TRACTORS ABOVE 120,000 POUNDS GCWR

(g/ton-mile) [a]

Subcategory	Model years 2021–2023	Model years 2024–2026
Heavy Class 8 Low-Roof Day Cab	53.5	50.8
Heavy Class 8 Low-Roof Sleeper Cab	47.1	44.5
Heavy Class 8 Mid-Roof Day Cab	55.6	52.8
Heavy Class 8 Mid-Roof Sleeper Cab	49.6	46.9
Heavy Class 8 High-Roof Day Cab	54.5	51.4
Heavy Class 8 High-Roof Sleeper Cab	47.1	44.2

[a] Note that these standards are not directly comparable to the standards for Heavy-Haul Tractors in § 1037.106 because GEM handles aerodynamic performance differently for the two sets of standards.

* * * * *

■ 90. Amend § 1037.701 by revising paragraphs (a) and (h) to read as follows:

§ 1037.701 General provisions.

(a) You may average, bank, and trade emission credits for purposes of certification as described in this subpart and in subpart B of this part to show compliance with the standards of §§ 1037.105 and 1037.106. Note that § 1037.105(h) specifies standards involving limited or no use of emission credits under this subpart. Participation in this program is voluntary.

* * * * *

(h) See § 1037.740 for special credit provisions that apply for credits generated under 40 CFR 86.1819–14(k)(7), 40 CFR 1036.615, or § 1037.615.

* * * * *

■ 91. Revise § 1037.705 to read as follows:

§ 1037.705 Generating and calculating CO_2 emission credits.

(a) The provisions of this section apply separately for calculating CO_2 emission credits for each pollutant.

(b) For each participating family or subfamily, calculate positive or negative emission credits relative to the otherwise applicable emission standard. Calculate positive emission credits for a family or subfamily that has an FEL below the standard. Calculate negative emission credits for a family or subfamily that has an FEL above the standard. Sum your positive and negative credits for the model year before rounding. Round the sum of emission credits to the nearest megagram (Mg), using consistent units with the following equation:

$$\text{Emission credits (Mg)} = (\text{Std} - \text{FEL}) \cdot \text{PL} \cdot \text{Volume} \cdot \text{UL} \cdot 10^{-6}$$

Where:

Std = the emission standard associated with the specific regulatory subcategory (g/ton-mile). For credits generated on all model year 2027 and later vocational vehicles with tailpipe CO_2 emissions deemed to be zero under 40 CFR 1037.150(f), use the emission standard in § 1037.105 that applies for the compression-ignition multi-purpose subcategory for the corresponding vehicle weight class.

FEL = the family emission limit for the vehicle subfamily (g/ton-mile).

PL = standard payload, in tons.

Volume = U.S.-directed production volume of the vehicle subfamily, subject to the exclusions described in paragraph (c) of this section. For example, if you produce three configurations with the same FEL, the subfamily production volume would be the sum of the production volumes for these three configurations.

UL = useful life of the vehicle, in miles, as described in §§ 1037.105 and 1037.106.

(c) Compliance with the requirements of this subpart is determined at the end of the model year by calculating emission credits based on actual production volumes, excluding any of the following engines:

(1) Vehicles that you do not certify to the CO_2 standards of this part because they are permanently exempted under subpart G of this part or under 40 CFR part 1068.

(2) Exported vehicles even if they are certified under this part and labeled accordingly.

(3) Vehicles not subject to the requirements of this part, such as those excluded under § 1037.5.

(4) Any other vehicles, where we indicate elsewhere in this part 1037 that they are not to be included in the calculations of this subpart.

■ 92. Amend § 1037.710 by revising paragraph (c) to read as follows:

§ 1037.710 Averaging.

* * * * *

(c) If you certify a vehicle family to an FEL that exceeds the otherwise applicable standard, you must obtain enough emission credits to offset the vehicle family's deficit by the due date for the final report required in § 1037.730. The emission credits used to address the deficit may come from your other vehicle families that generate emission credits in the same model year (or from later model years as specified in § 1037.745), from emission credits you have banked from previous model years, or from emission credits generated in the same or previous model years that you obtained through trading.

■ 93. Amend § 1037.715 by revising paragraph (a) to read as follows:

§ 1037.715 Banking.

(a) Banking is the retention of surplus emission credits by the manufacturer generating the emission credits for use in future model years for averaging or trading.

* * * * *

■ 94. Amend § 1037.720 by revising paragraph (a) to read as follows:

§ 1037.720 Trading.

(a) Trading is the exchange of emission credits between manufacturers, or the transfer of credits to another party to retire them. You may use traded emission credits for averaging, banking, or further trading transactions. Traded emission credits remain subject to the averaging-set restrictions based on the averaging set in which they were generated.

* * * * *

■ 95. Amend § 1037.730 by revising paragraphs (b)(4) and (f) to read as follows:

§ 1037.730 ABT reports.

* * * * *

(b) * * *

(4) The projected and actual production volumes for the model year for calculating emission credits. If you changed an FEL during the model year, identify the actual production volume associated with each FEL.

* * * * *

(f) * * *

(1) If you notify us by the deadline for submitting the final report that errors mistakenly decreased your balance of emission credits, you may correct the errors and recalculate the balance of emission credits. If you notify us that errors mistakenly decreased your balance of emission credits after the deadline for submitting the final report, you may correct the errors and recalculate the balance of emission credits after applying a 10 percent discount to the credit correction, but only if you notify us within 24 months after the deadline for submitting the final report. If you report a negative balance of emission credits, we may disallow corrections under this paragraph (f)(1).

* * * * *

■ 96. Amend § 1037.740 by:

■ a. Removing paragraphs (a)(4) and (5);

■ b. Redesignating paragraph (a)(6) as paragraph (a)(4); and

■ c. Revising paragraphs (b)(1) introductory text and (b)(2).

The revisions read as follows:

§ 1037.740 Restrictions for using emission credits.

* * * * *

(a) * * *

(4) Note that other separate averaging sets also apply for emission credits not related to this part. For example, vehicles certified to the greenhouse gas standards of 40 CFR part 86, subpart S, comprise a single averaging set. Separate averaging sets also apply for engines under 40 CFR part 1036, including engines used in vehicles subject to this subpart.

(b) * * *

(1) Credits generated from Phase 1 vehicles may be used for any of the averaging sets identified in paragraph (a) of this section; you may also use those credits to demonstrate compliance with the CO_2 emission standards in 40 CFR part 86, subpart S, and 40 CFR part 1036. Similarly, you may use Phase 1 advanced-technology credits generated under 40 CFR 86.1819–14(k)(7) or 40 CFR 1036.615 to demonstrate compliance with the CO_2 standards in this part. The maximum amount of advanced-technology credits generated from Phase 1 vehicles that you may bring into each of the following service class groups is 60,000 Mg per model year:

* * * * *

(2) Credits generated from Phase 2 and Phase 3 vehicles are subject to all the averaging-set restrictions that apply to other emission credits.

* * * * *

■ 97. Amend § 1037.745 by revising paragraph (a) to read as follows:

§ 1037.745 End-of-year CO_2 credit deficits.

* * * * *

(a) Your certificate for a vehicle family for which you do not have sufficient CO_2 credits will not be void if you remedy the deficit with surplus credits within three model years (this applies equally for tractors and vocational vehicles). For example, if you have a credit deficit of 500 Mg for a vehicle family at the end of model year 2015, you must generate (or otherwise obtain) a surplus of at least 500 Mg in that same averaging set by the end of model year 2018.

* * * * *

■ 98. Amend § 1037.801 by:
■ a. Adding a definition of ''Battery electric vehicle'' in alphabetical order;
■ b. Removing the definition of ''Box van'';
■ c. Revising the definition of ''Class'';
■ d. Removing the definitions of ''Container chassis'', ''Electric vehicle'', and ''Flatbed trailer'';
■ e. Adding a definition of ''Fuel cell electric vehicle'' in alphabetical order;
■ f. Revising the definitions of ''Heavy-duty vehicle'' and ''Heavy-haul tractor'';
■ g. Adding a definition of ''Hybrid'' in alphabetical order;
■ h. Removing the definitions of ''Hybrid engine or hybrid powertrain'' and ''Hybrid vehicle'';
■ i. Revising the definitions of ''Low rolling resistance tire'', ''Manufacturer'', and ''Model year'';
■ j. Adding a definition of ''Neat'' in alphabetical order;
■ k. Revising the definitions of ''Phase 1'' and ''Phase 2'';
■ l. Adding definitions of ''Phase 3'' and ''Plug-in hybrid electric vehicle'' in alphabetical order;
■ m. Revising the definitions of ''Preliminary approval'', ''Small manufacturer'', and ''Standard payload'';
■ n. Removing the definitions of ''Standard tractor'' and ''Tank trailer''; and
■ o. Revising the definitions of ''Tire rolling resistance level (TRRL)'', ''Trailer'', ''U.S.-directed production volume'', and ''Vehicle''.

The additions and revision read as follows:

§ 1037.801 Definitions.

* * * * *

Battery electric vehicle means a motor vehicle powered solely by an electric motor where energy for the motor is supplied by one or more batteries that receive power from an external source of electricity. Note that this definition does not include hybrid vehicles or plug-in hybrid electric vehicles.

* * * * *

Class means relating to GVWR classes for vehicles, as follows:

(1) *Class 2b* means relating to heavy-duty motor vehicles at or below 10,000 pounds GVWR.

(2) *Class 3* means relating to heavy-duty motor vehicles above 10,000 pounds GVWR but at or below 14,000 pounds GVWR.

(3) *Class 4* means relating to heavy-duty motor vehicles above 14,000 pounds GVWR but at or below 16,000 pounds GVWR.

(4) *Class 5* means relating to heavy-duty motor vehicles above 16,000 pounds GVWR but at or below 19,500 pounds GVWR.

(5) *Class 6* means relating to heavy-duty motor vehicles above 19,500 pounds GVWR but at or below 26,000 pounds GVWR.

(6) *Class 7* means relating to heavy-duty motor vehicles above 26,000 pounds GVWR but at or below 33,000 pounds GVWR.

(7) *Class 8* means relating to heavy-duty motor vehicles above 33,000 pounds GVWR.

* * * * *

Fuel cell electric vehicle means a motor vehicle powered solely by an electric motor where energy for the motor is supplied by hydrogen fuel cells. Fuel cell electric vehicles may include energy storage from the fuel cells or from regenerative braking in a battery.

* * * * *

Heavy-duty vehicle means any motor vehicle that has a GVWR above 8,500 pounds. An incomplete vehicle is also a heavy-duty vehicle if it has a curb weight above 6,000 pounds or a basic vehicle frontal area greater than 45 square feet.

Heavy-haul tractor means a tractor with GCWR greater than or equal to 120,000 pounds. A heavy-haul tractor is not a vocational tractor in Phase 2 and Phase 3.

* * * * *

Hybrid has the meaning given in 40 CFR 1036.801. Note that a hybrid vehicle is a vehicle with a hybrid powertrain (including a hybrid engine). This includes plug-in hybrid electric vehicles.

* * * * *

Low rolling resistance tire means a tire on a vocational vehicle with a TRRL at or below of 7.7 N/kN, a steer tire on a tractor with a TRRL at or below 7.7 N/kN, a drive tire on a tractor with a TRRL at or below 8.1 N/kN.

* * * * *

Manufacturer has the meaning given in section 216(1) of the Act. In general, this term includes any person who manufactures or assembles a vehicle (including an incomplete vehicle) for sale in the United States or otherwise introduces a new motor vehicle into commerce in the United States. This includes importers who import vehicles for resale, entities that manufacture glider kits, and entities that assemble glider vehicles.

* * * * *

Model year means one of the following for compliance with this part. Note that manufacturers may have other model year designations for the same vehicle for compliance with other requirements or for other purposes:

(1) For tractors and vocational vehicles with a date of manufacture on or after January 1, 2021, *model year* means the manufacturer's annual new model production period based on the vehicle's date of manufacture, where the model year is the calendar year corresponding to the date of manufacture, except as follows:

(i) The vehicle's model year may be designated as the year before the calendar year corresponding to the date of manufacture if the engine's model year is also from an earlier year. You may ask us to extend your prior model year certificate to include such vehicles. Note that § 1037.601(a)(2) limits the extent to which vehicle manufacturers may install engines built in earlier calendar years.

(ii) The vehicle's model year may be designated as the year after the calendar year corresponding to the vehicle's date of manufacture. For example, a manufacturer may produce a new vehicle by installing the engine in December 2023 and designating it as a model year 2024 vehicle.

(2) For Phase 1 tractors and vocational vehicles with a date of manufacture before January 1, 2021, *model year* means the manufacturer's annual new model production period, except as restricted under this definition and 40 CFR part 85, subpart X. It must include January 1 of the calendar year for which the model year is named, may not begin before January 2 of the previous calendar year, and it must end by December 31 of the named calendar year. The model year may be set to match the calendar year corresponding to the date of manufacture.

(i) The manufacturer who holds the certificate of conformity for the vehicle must assign the model year based on the date when its manufacturing operations are completed relative to its annual model year period. In unusual circumstances where completion of your assembly is delayed, we may allow you to assign a model year one year

earlier, provided it does not affect which regulatory requirements will apply.

(ii) Unless a vehicle is being shipped to a secondary vehicle manufacturer that will hold the certificate of conformity, the model year must be assigned prior to introduction of the vehicle into U.S. commerce. The certifying manufacturer must redesignate the model year if it does not complete its manufacturing operations within the originally identified model year. A vehicle introduced into U.S. commerce without a model year is deemed to have a model year equal to the calendar year of its introduction into U.S. commerce unless the certifying manufacturer assigns a later date.

* * * * *

Neat has the meaning given in 40 CFR 1065.1001.

* * * * *

Phase 1 means relating to the Phase 1 standards specified in §§ 1037.105 and 1037.106. For example, a vehicle subject to the Phase 1 standards is a Phase 1 vehicle.

Phase 2 means relating to the Phase 2 standards specified in §§ 1037.105 and 1037.106.

Phase 3 means relating to the Phase 3 standards specified in §§ 1037.105 and 1037.106.

* * * * *

Plug-in hybrid electric vehicle means a hybrid vehicle that has the capability to charge one or more batteries from an external source of electricity while the vehicle is parked.

* * * * *

Preliminary approval means approval granted by an authorized EPA representative prior to submission of an application for certification, consistent with the provisions of § 1037.210.

* * * * *

Small manufacturer means a manufacturer meeting the small business criteria specified in 13 CFR 121.201 for heavy-duty truck manufacturing (NAICS code 336120). The employee limit applies to the total number employees for all affiliated companies (as defined in 40 CFR 1068.30).

* * * * *

Standard payload means the payload assumed for each vehicle, in tons, for modeling and calculating emission credits, as follows:

(1) For vocational vehicles:

(i) 2.85 tons for Light HDV.

(ii) 5.6 tons for Medium HDV.

(iii) 7.5 tons for Heavy HDV.

(2) For tractors:

(i) 12.5 tons for Class 7.

(ii) 19 tons for Class 8, other than heavy-haul tractors.

(iii) 43 tons for heavy-haul tractors.

* * * * *

Tire rolling resistance level (TRRL) means a value with units of N/kN that represents the rolling resistance of a tire configuration. TRRLs are used as modeling inputs under § 1037.520. Note that a manufacturer may use the measured value for a tire configuration's coefficient of rolling resistance, or assign some higher value.

* * * * *

Trailer means a piece of equipment designed for carrying cargo and for being drawn by a tractor when coupled to the tractor's fifth wheel.

* * * * *

U.S.-directed production volume means the number of vehicle units, subject to the requirements of this part, produced by a manufacturer for which the manufacturer has a reasonable assurance that sale was or will be made to ultimate purchasers in the United States. Note that this includes vehicles certified to state emission standards that are different than the emission standards in this part.

* * * * *

Vehicle means equipment intended for use on highways that meets at least one of the criteria of paragraph (1) of this definition, as follows:

(1) The following equipment are vehicles:

(i) A piece of equipment that is intended for self-propelled use on highways becomes a vehicle when it includes at least an engine, a transmission, and a frame. (**Note:** For purposes of this definition, any electrical, mechanical, and/or hydraulic devices attached to engines for the purpose of powering wheels are considered to be transmissions.)

(ii) A piece of equipment that is intended for self-propelled use on highways becomes a vehicle when it includes a passenger compartment attached to a frame with one or more axles.

(2) Vehicles may be complete or incomplete vehicles as follows:

(i) A *complete vehicle* is a functioning vehicle that has the primary load carrying device or container (or equivalent equipment) attached when it is first sold as a vehicle. Examples of equivalent equipment would include fifth wheel trailer hitches, firefighting equipment, and utility booms.

(ii) An *incomplete vehicle* is a vehicle that is not a complete vehicle. Incomplete vehicles may also be cab-complete vehicles. This may include vehicles sold to secondary vehicle manufacturers.

(iii) You may ask us to allow you to certify a vehicle as incomplete if you manufacture the engines and sell the unassembled chassis components, as long as you do not produce and sell the body components necessary to complete the vehicle.

* * * * *

■ 99. In § 1037.805 amend Table 5 in paragraph (e) by adding an entry for ''GHG'' in alphabetical order and removing the entry for ''PHEV'' to read as follows:

§ 1037.805 Symbols, abbreviations, and acronyms.

* * * * *

(e) * * *

TABLE 5 TO PARAGRAPH (e) OF § 1037.805—OTHER ACRONYMS AND ABBREVIATIONS

Acronym	Meaning
* * * * *	
GHG	Greenhouse gas.
* * * * *	

* * * * *

■ 100. Amend § 1037.810 by:

■ a. Removing paragraph (c)(9);

■ b. Redesignating paragraph (c)(10) as paragraph (c)(9);

■ c. Revising paragraph (d)(4);

■ d. Removing the text ''bb'' in paragraphs (d)(2), (3), and (5) and add, in their place, the text ''x''; and

■ e. Adding paragraph (e).

The revision and addition read as follows:

§ 1037.810 Incorporation by reference.

* * * * *

(d) * * *

(4) Greenhouse gas Emissions Model (GEM) Phase 2, Version 4.0, April 2022 (''GEM Phase 2, Version 4.0''); IBR approved for §§ 1037.150(x); 1037.520.

* * * * *

(e) UN Economic Commission for Europe, Information Service, Palais des Nations, CH–1211 Geneva 10, Switzerland; *unece_info@un.org*; *www.unece.org*:

(1) Addendum 22: United Nations Global Technical Regulation, No. 22, United Nations Global Technical Regulation on In-vehicle Battery Durability for Electrified Vehicles, Adopted April 14, 2022, (''GTR No. 22''); IBR approved for § 1037.115(f).

(2) [Reserved]

■ 101. Revise appendix C of part 1037 to read as follows:

Appendix C of Part 1037—Emission Control Identifiers

This appendix identifies abbreviations for emission control information labels, as required under § 1037.135.

Vehicle Speed Limiters
—VSL—Vehicle speed limiter
—VSLS—''Soft-top'' vehicle speed limiter
—VSLE—Expiring vehicle speed limiter
—VSLD—Vehicle speed limiter with both ''soft-top'' and expiration
Idle Reduction Technology
—IRT5—Engine shutoff after 5 minutes or less of idling
—IRTE—Expiring engine shutoff
Tires
—LRRA—Low rolling resistance tires (all)
—LRRD—Low rolling resistance tires (drive)
—LRRS—Low rolling resistance tires (steer)
Aerodynamic Components
—ATS—Aerodynamic side skirt and/or fuel tank fairing
—ARF—Aerodynamic roof fairing
—ARFR—Adjustable height aerodynamic roof fairing
—TGR—Gap reducing tractor fairing (tractor to trailer gap)
Other Components
—ADVH—Vehicle includes advanced hybrid technology components
—ADVO—Vehicle includes other advanced-technology components (*i.e.,* non-hybrid system)
—INV—Vehicle includes innovative (off-cycle) technology components
—ATI—Automatic tire inflation system
—TPMS—Tire pressure monitoring system

■ 102. Amend appendix D of part 1037 by revising the appendix heading to read as follows:

Appendix D of Part 1037—Heavy-Duty Grade Profile for Phase 2 and Phase 3 Steady-State Test Cycles

* * * * *

PART 1054—CONTROL OF EMISSIONS FROM NEW, SMALL NONROAD SPARK-IGNITION ENGINES AND EQUIPMENT

■ 103. The authority citation for part 1054 continues to read as follows:

Authority: 42 U.S.C. 7401–7671q.

■ 104. Amend § 1054.501 by revising paragraph (b)(7) to read as follows:

§ 1054.501 How do I run a valid emission test?

* * * * *

(b) * * *

(7) Determine your test fuel's carbon mass fraction, w_c, using a calculation based on fuel properties as described in 40 CFR 1065.655(d); however, you must measure fuel properties for α and β rather than using the default values specified in 40 CFR 1065.655(e).

* * * * *

PART 1065—ENGINE-TESTING PROCEDURES

■ 105. The authority citation for part 1065 continues to read as follows:

Authority: 42 U.S.C. 7401–7671q.

■ 106. Amend § 1065.210 by revising paragraph (a) to read as follows:

§ 1065.210 Work input and output sensors.

(a) *Application.* Use instruments as specified in this section to measure work inputs and outputs during engine operation. We recommend that you use sensors, transducers, and meters that meet the specifications in Table 1 of § 1065.205. Note that your overall systems for measuring work inputs and outputs must meet the linearity verifications in § 1065.307. We recommend that you measure work inputs and outputs where they cross the system boundary as shown in Figure 1 of this section. The system boundary is different for air-cooled engines than for liquid-cooled engines. If you choose to measure work before or after a work conversion, relative to the system boundary, use good engineering judgment to estimate any work-conversion losses in a way that avoids overestimation of total work. For example, if it is impractical to instrument the shaft of an exhaust turbine generating electrical work, you may decide to measure its converted electrical work. As another example, your engine may include an engine exhaust electrical heater where the heater is powered by an external power source. In these cases, assume an electrical generator efficiency of 0.67 (η=0.67), which is a conservative estimate of the efficiency and could over-estimate brake-specific emissions. As another example, you may decide to measure the tractive (*i.e.,* electrical output) power of a locomotive, rather than the brake power of the locomotive engine. In these cases, divide the electrical work by accurate values of electrical generator efficiency (η<1), or assume an efficiency of 1 (η=1), which would over-estimate brake-specific emissions. For the example of using locomotive tractive power with a generator efficiency of 1 (η=1), this means using the tractive power as the brake power in emission calculations. Do not underestimate any work conversion efficiencies for any components outside the system boundary that do not return work into the system boundary. And do not overestimate any work conversion efficiencies for components outside the system boundary that do return work into the system boundary. In all cases, ensure that you are able to accurately demonstrate compliance with the applicable standards in this chapter. Figure 1 follows:

BILLING CODE 6560–50–P

Figure 1 to paragraph (a) of § 1065.210: Work Inputs, Outputs, and System Boundaries

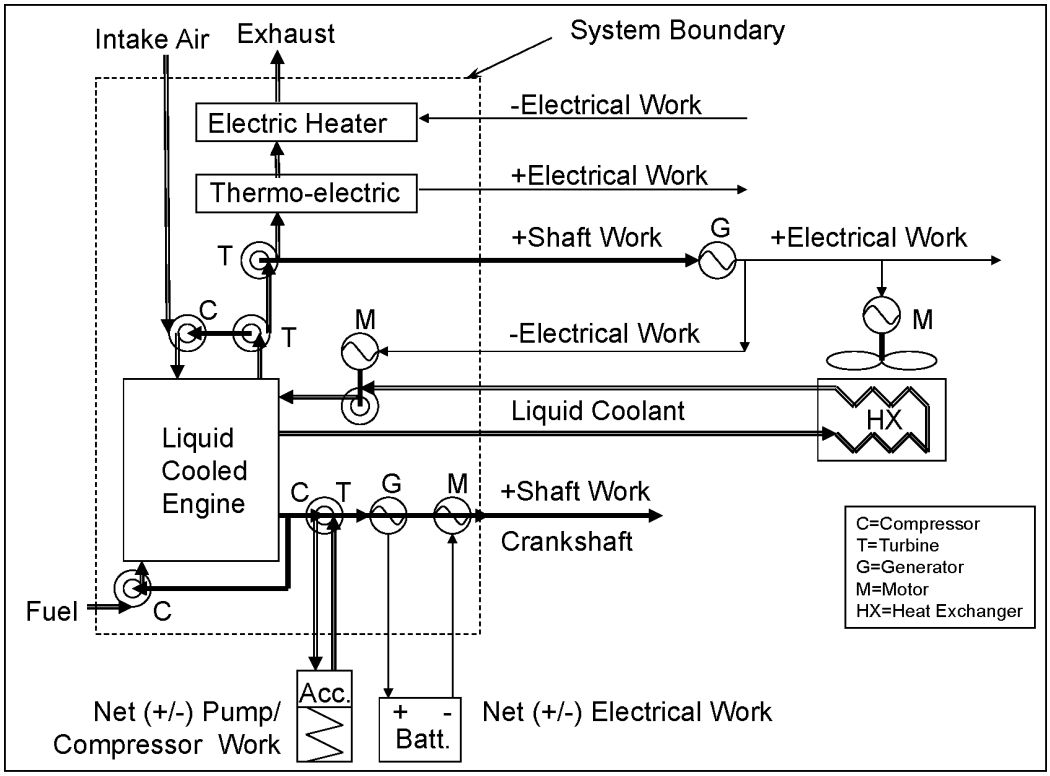

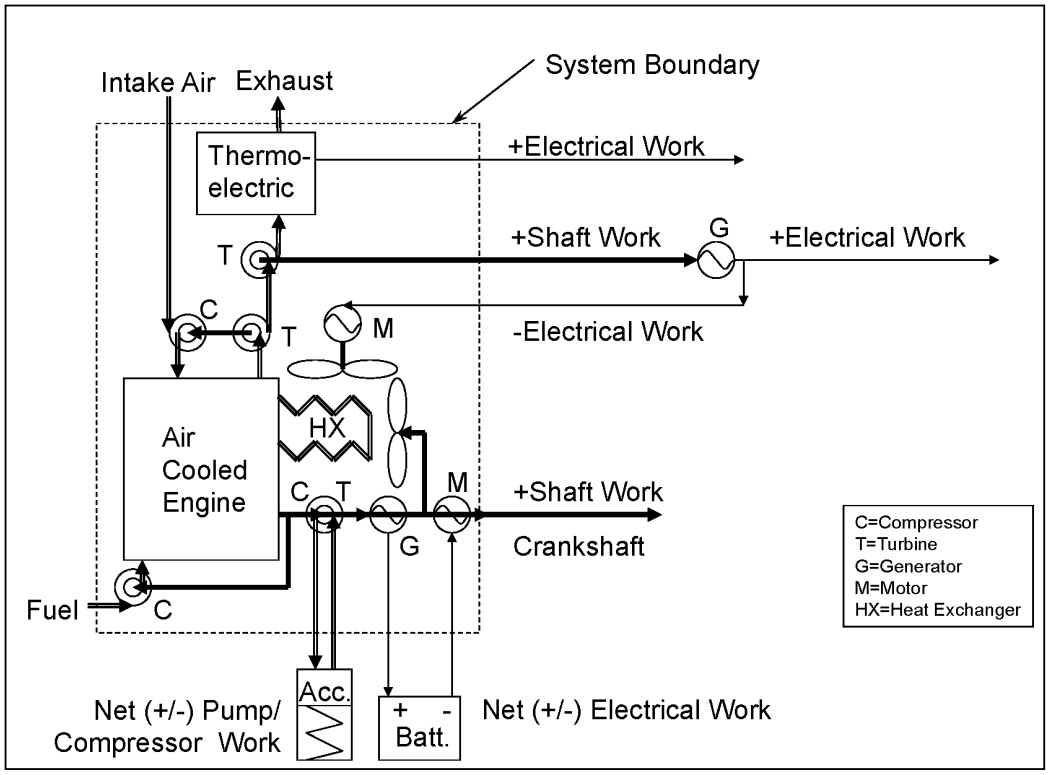

BILLING CODE 6560–50–C

* * * * *

■ 107. Amend subpart C by adding a new center header ''H_2 AND H_2O MEASUREMENTS'' after § 1065.250 and adding §§ 1065.255 and 1065.257 under the new center header to read as follows:

H_2 and H_2O MEASUREMENTS

§ 1065.255 H_2 measurement devices.

(a) *General component requirements.* We recommend that you use an analyzer that meets the specifications in Table 1 of § 1065.205. Note that your system must meet the linearity verification in § 1065.307.

(b) *Instrument types.* You may use any of the following analyzers to measure H2:

(1) Magnetic sector mass spectrometer.

(2) Raman spectrometer.

(c) *Interference verification.* Certain species can positively interfere with magnetic sector mass spectroscopy and raman spectroscopy by causing a response similar to H_2. When running the interference verification for these analyzers, use good engineering judgment to determine interference species. Note that for raman spectroscopy interference species are dependent on the H_2 infrared absorption band chosen by the instrument manufacturer. For each analyzer determine the H_2 infrared absorption band. For each H_2 infrared adsorption band, determine the interference species to use in the verification. Use the interference species specified by the instrument manufacturer or use good engineering judgment to determine the interference species.

§ 1065.257 Fourier transform infrared analyzer for H_2O measurement.

(a) *Component requirements.* We recommend that you use an FTIR analyzer that meets the specifications in Table 1 of § 1065.205. Note that your system must meet the linearity verification in § 1065.307 using a water generation system that meets the requirements of § 1065.750(a)(6). Use appropriate analytical procedures for interpretation of infrared spectra. For example, EPA Test Method 320 (see § 1065.266(b)) and ASTM D6348 (incorporated by reference, see § 1065.1010) are considered valid methods for spectral interpretation. You must use heated FTIR analyzers that maintain all surfaces that are exposed to emissions at a temperature of (110 to 202) °C.

(b) *Interference verification.* Certain species can interfere with FTIR analyzers by causing a response similar to the water.

(1) Perform CO_2 interference verification for FTIR analyzers using the procedures of § 1065.357 as CO_2 gas can positively interfere with FTIR analyzers by causing a response similar to H_2O.

(2) Use good engineering judgment to determine other interference species for FTIR analyzers. Possible interference species include, but are not limited to, CO, NO, C_2H_4, and C_7H_8. Perform interference verification using the procedures of § 1065.357, replacing occurances of CO_2 (except for § 1065.357(e)(1)) with the targeted interferent specie. Note that interference species, with the exception of CO_2, are dependent on the H_2O infrared absorption band chosen by the instrument manufacturer. For each analyzer determine the H_2O infrared absorption band. For each H_2O infrared absorption band, use good engineering judgment to determine interference species to use in the verification.

■ 108. Amend § 1065.266 by revising paragraph (e) as follows:

§ 1065.266 Fourier transform infrared analyzer.

* * * * *

(e) *Interference verification.* Perform interference verification for FTIR analyzers using the procedures of § 1065.366. Certain species can interfere with FTIR analyzers by causing a response similar to the hydrocarbon species of interest. When running the interference verification for these analyzers, use interference species as follows:

(1) The interference species for CH_4 are CO_2, H_2O, and C_2H_6.

(2) The interference species for C_2H_6 are CO_2, H_2O, and CH_4.

(3) The interference species for other measured hydrocarbon species are CO_2, H_2O, CH_4, and C_2H_6.

■ 109. Revise the undesignated center heading preceding § 1065.270 to read as follows:

NO_X, N_2O, and NH_3 MEASUREMENTS

■ 110. Add § 1065.277 under the undesignated and newly revised center header ''NO_X, N_2O, and NH_3 Measurements'' to read as follows:

§ 1065.277 NH_3 measurement devices.

(a) *General component requirements.* We recommend that you use an analyzer that meets the specifications in Table 1 of § 1065.205. Note that your system must meet the linearity verification in § 1065.307.

(b) *Instrument types.* You may use any of the following analyzers to measure NH_3:

(1) Nondispersive ultravoilet (NDUV) analyzer.

(2) Fourier transform infrared (FTIR) analyzer. Use appropriate analytical procedures for interpretation of infrared spectra. For example, EPA Test Method 320 (see § 1065.266(b)) and ASTM D6348 (incorporated by reference, see § 1065.1010) are considered valid methods for spectral interpretation.

(3) Laser infrared analyzer. Examples of laser infrared analyzers are pulsed-mode high-resolution narrow band mid-infrared analyzers, modulated continuous wave high-resolution narrow band mid-infrared analyzers, and modulated continuous wave high-resolution near-infrared analyzers. A quantum cascade laser, for example, can emit coherent light in the mid-infrared region where nitrogen compounds including NH_3 have strong absorption.

(c) *Sampling system.* NH_3 has a tendency to adsorb to surfaces that it encounters. Minimize NH_3 losses and sampling artifacts by using sampling system components (sample lines, prefilters and valves) made of stainless steel or PTFE heated to (110 to 202) °C. If you heat these components to temperatures ≥130 °C, use good engineering judgement to minimize NH_3 formation due to thermal decomposition and hydrolysis of any DEF present in the sample gas. Use a sample line that is as short as practically possible.

(d) *Interference verification.* Certain species can positively interfere with NDUV, FTIR, and laser infrared analyzers by causing a response similar to NH_3. Perform interference verification for NDUV analyzers using the procedures of § 1065.372, replacing occurances of NO_X with NH_3 and interference species with those listed in paragraph (d)(1) of this section. NDUV analyzers must have combined interference that is within (0.0±2.0) μmol/mol. Perform interference verification for FTIR and laser infrared analyzers using the procedures of § 1065.377. When running the interference verification for these analyzers, use interference species as follows:

(1) For NDUV analyzers, use SO_2 and H_2O as the interference species.

(2) Use good engineering judgment to determine interference species for FTIR and laser infrared analyzers. Note that interference species, with the exception of H_2O, are dependent on the NH_3 infrared absorption band chosen by the instrument manufacturer. For each analyzer determine the NH_3 infrared absorption band. For each NH_3 infrared absorption band, use the interference gases specified by the instrument manufacturer or use good engineering judgment to determine the interference gases to use in the verification.

■ 111. Amend § 1065.315 by revising paragraphs (a)(2) and (3) to read as follows:

§ 1065.315 Pressure, temperature, and dewpoint calibration.

(a) * * *

(2) *Temperature*. We recommend digital dry-block or stirred-liquid temperature calibrators, with data logging capabilities to minimize transcription errors. We recommend using calibration reference quantities that are NIST-traceable within ±0.5% uncertainty of absolute temperature. You may perform linearity verification for temperature measurement systems with thermocouples, RTDs, and thermistors by removing the sensor from the system and using a simulator in its place. Use a NIST-traceable simulator that is independently calibrated and, as appropriate, cold-junction compensated. The simulator uncertainty scaled to absolute temperature must be less than 0.5% of T_{max}. If you use this option, you must use sensors that the supplier states are accurate to better than 0.5% of T_{max} compared with their standard calibration curve.

(3) *Dewpoint*. We recommend a minimum of three different temperature-equilibrated and temperature-monitored calibration salt solutions in containers that seal completely around the dewpoint sensor. We recommend using calibration reference quantities that are NIST-traceable within ±0.5% uncertainty of absolute dewpoint temperature.

* * * * *

■ 112. Amend subpart D by adding a new center header ''H_2O MEASUREMENTS'' after § 1065.355 and adding §§ 1065.357 under the new center header to read as follows:

H_2O MEASUREMENTS

§ 1065.357 CO_2 interference verification for H_2O FTIR analyzers.

(a) *Scope and frequency*. If you measure H_2O using an FTIR analyzer, verify the amount of CO_2 interference after initial analyzer installation and after major maintenance.

(b) *Measurement principles*. CO_2 can interfere with an FTIR analyzer's response to H_2O. If the FTIR analyzer uses compensation algorithms that utilize measurements of other gases to meet this interference verification, simultaneously conduct these other measurements to test the compensation algorithms during the analyzer interference verification.

(c) *System requirements*. An H_2O FTIR analyzer must have a CO_2 interference that is within (0.0±0.4) mmol/mol, though we strongly recommend a lower interference that is within (0.0±0.2) mmol/mol.

(d) *Procedure*. Perform the interference verification as follows:

(1) Start, operate, zero, and span the H_2O FTIR analyzer as you would before an emission test.

(2) Use a CO_2 span gas that meets the specifications of § 1065.750 and a concentration that is approximately the maximum CO_2 concentration expected during emission testing.

(3) Introduce the CO_2 test gas into the sample system.

(4) Allow time for the analyzer response to stabilize. Stabilization time may include time to purge the transfer line and to account for analyzer response.

(5) While the analyzer measures the sample's concentration, record 30 seconds of sampled data. Calculate the arithmetic mean of this data. The analyzer meets the interference verification if this value is within (0.0 ± 0.4) mmol/mol.

(e) *Exceptions*. The following exceptions apply:

(1) You may omit this verification for CO_2 for engines operating on fuels other than carbon-containing fuels.

(2) You may omit this verification if you can show by engineering analysis that for your H_2O sampling system and your emission-calculation procedures, the CO_2 interference for your H_2O FTIR analyzer always affects your brake-specific emission results within ±0.5% of each of the applicable standards in this chapter. This specification also applies for vehicle testing, except that it relates to emission results in g/mile or g/kilometer.

(3) You may use an H_2O FTIR analyzer that you determine does not meet this verification, as long as you try to correct the problem and the measurement deficiency does not adversely affect your ability to show that engines comply with all applicable emission standards.

■ 113. Amend § 1065.360 by revising paragraphs (a)(4), (b), (d) introductory text, and (d)(12) to read as follows:

§ 1065.360 FID optimization and verification.

(a) * * *

(4) You may determine the methane (CH_4) and ethane (C_2H_6) response factors as a function of the molar water concentration in the raw or diluted exhaust. If you choose the option in this paragraph (a)(4), generate and verify the humidity level (or fraction) as described in § 1065.365(g).

(b) *Calibration*. Use good engineering judgment to develop a calibration procedure, such as one based on the FID-analyzer manufacturer's instructions and recommended frequency for calibrating the FID. Alternately, you may remove system components for off-site calibration. For a FID that measures THC, calibrate using C_3H_8 calibration gases that meet the specifications of § 1065.750. For a FID that measures CH_4, calibrate using CH_4 calibration gases that meet the specifications of § 1065.750. We recommend FID analyzer zero and span gases that contain approximately the flow-weighted mean concentration of O_2 expected during testing. If you use a FID to measure CH_4 downstream of a nonmethane cutter (NMC), you may calibrate that FID using CH_4 calibration gases with the NMC. Regardless of the calibration gas composition, calibrate on a carbon number basis of one (C_1). For example, if you use a C_3H_8 span gas of concentration 200 µmol/mol, span the FID to respond with a value of 600 µmol/mol. As another example, if you use a CH_4 span gas with a concentration of 200 µmol/mol, span the FID to respond with a value of 200 µmol/mol.

* * * * *

(d) *THC FID CH_4 response factor determination*. This procedure is only for FID analyzers that measure THC. Since FID analyzers generally have a different response to CH_4 versus C_3H_8, determine the THC–FID analyzer's CH_4 response factor, $RF_{CH4[THC–FID]}$, after FID optimization. Use the most recent $RF_{CH4[THC–FID]}$ measured according to this section in the calculations for HC determination described in § 1065.660 to compensate for CH_4 response. Determine $RF_{CH4[THC–FID]}$ as follows, noting that you do not determine $RF_{CH4[THC–FID]}$ for FIDs that are calibrated and spanned using CH_4 with an NMC:

* * * * *

(12) You may determine the response factor as a function of molar water concentration and use this response factor to account for the CH_4 response for NMHC determination described in § 1065.660(b)(2)(iii). If you use this option, humidify the CH_4 span gas as described in § 1065.365(g) and repeat the steps in paragraphs (d)(7) through (9) of this section until measurements are complete for each setpoint in the selected range. Divide each mean measured CH_4 concentration by the recorded span concentration of the CH_4 calibration gas, adjusted for water content, to determine the FID analyzer's CH_4 response factor, $RF_{CH4[THC–FID]}$. Use the CH_4 response factors at the different setpoints to create a functional relationship between response factor and molar water concentration,

downstream of the last sample dryer if any sample dryers are present. Use this functional relationship to determine the response factor during an emission test.

* * * * *

■ 114. Revise § 1065.365 to read as follows:

§ 1065.365 Nonmethane cutter penetration fractions and NMC FID response factors.

(a) *Scope and frequency.* If you use a FID analyzer and a nonmethane cutter (NMC) to measure methane (CH_4), determine the NMC's penetration fractions of CH_4, PF_{CH4}, and ethane (C_2H_6), PF_{C2H6}. As detailed in this section, these penetration fractions may be determined as a combination of NMC penetration fractions and FID analyzer response factors, depending on your particular NMC and FID analyzer configuration. Perform this verification after installing the NMC. Repeat this verification within 185 days of testing to verify that the catalytic activity of the NMC has not deteriorated. Note that because NMCs can deteriorate rapidly and without warning if they are operated outside of certain ranges of gas concentrations and outside of certain temperature ranges, good engineering judgment may dictate that you determine an NMC's penetration fractions more frequently.

(b) *Measurement principles.* A NMC is a heated catalyst that removes nonmethane hydrocarbons from an exhaust sample stream before the FID analyzer measures the remaining hydrocarbon concentration. An ideal NMC would have a CH_4 penetration fraction, PF_{CH4}, of 1.000, and the penetration fraction for all other nonmethane hydrocarbons would be 0.000, as represented by PF_{C2H6}. The emission calculations in § 1065.660 use the measured values from this verification to account for less than ideal NMC performance.

(c) *System requirements.* We do not limit NMC penetration fractions to a certain range. However, we recommend that you optimize an NMC by adjusting its temperature to achieve a PF_{C2H6} <0.02, as determined by paragraphs (d), (e), or (f) of this section, as applicable, using dry gases. If we use an NMC for testing, it will meet this recommendation. If adjusting NMC temperature does not result in achieving this recommendation, we recommend that you replace the catalyst material. Use the most recently determined penetration values from this section to calculate HC emissions according to § 1065.660 and § 1065.665 as applicable.

(d) *Procedure for a FID calibrated with the NMC.* The method described in this paragraph (d) is recommended over the procedures specified in paragraphs (e) and (f) of this section and required for any gaseous-fueled engine, including dual-fuel and flexible-fuel engines. For any gaseous-fueled engine, including dual-fuel and flexible-fuel engines, you must determine the combined CH_4 response factor and penetration fraction, $RFPF_{CH4[NMC–FID]}$, and combined C_2H_6 response factor and penetration fraction, $RFPF_{C2H6[NMC–FID]}$, as a function of the molar water concentration in the raw or diluted exhaust as described in paragraphs (d)(9) and (g) of this section. Note that $RFPF_{CH4[NMC–FID]}$ is set equal to 1.0 only for zero molar water concentration. For any other engine you may use the same procedure, or you may set $RFPF_{CH4[NMC–FID]}$ equal to 1.0 and determine $RFPF_{C2H6[NMC–FID]}$ at zero molar water concentration. Generate and verify the humidity generation as described in paragraph (g) of this section.

(1) Select CH_4 and C_2H_6 analytical gas mixtures and ensure that both mixtures meet the specifications of § 1065.750. Select a CH_4 concentration that you would use for spanning the FID during emission testing and select a C_2H_6 concentration that is typical of the peak NMHC concentration expected at the hydrocarbon standard or equal to the THC analyzer's span value. For CH_4 analyzers with multiple ranges, perform this procedure on the highest range used for emission testing.

(2) Start, operate, and optimize the NMC according to the manufacturer's instructions, including any temperature optimization.

(3) Confirm that the FID analyzer meets all the specifications of § 1065.360.

(4) Start and operate the FID analyzer according to the manufacturer's instructions.

(5) Zero and span the FID with the NMC as you would during emission testing. Span the FID through the NMC by using CH_4 span gas.

(6) Introduce the C_2H_6 analytical gas mixture upstream of the NMC. Use good engineering judgment to address the effect of hydrocarbon contamination if your point of introduction is vastly different from the point of zero/span gas introduction.

(7) Allow time for the analyzer response to stabilize. Stabilization time may include time to purge the NMC and to account for the analyzer's response.

(8) While the analyzer measures a stable concentration, record 30 seconds of sampled data. Calculate the arithmetic mean of these data points.

(9) Divide the mean C_2H_6 concentration by the reference concentration of C_2H_6, converted to a C_1 basis and adjusted for water content, if necessary. The result is the combined C_2H_6 response factor and penetration fraction, $RFPF_{C2H6[NMC–FID]}$. Use this combined C_2H_6 response factor and C_2H_6 penetration fraction and the product of the CH_4 response factor and CH_4 penetration fraction, $RFPF_{CH4[NMC–FID]}$, set to 1.0 in emission calculations according to § 1065.660(b)(2)(i) or (d)(1)(i) or § 1065.665, as applicable. If you are generating mixtures as a function of molar water concentration, follow the guidance in paragraph (g) of this section and repeat the steps in paragraphs (d)(6) to (9) of this section until all setpoints have been completed. Use $RFPF_{C2H6[NMC–FID]}$ at the different setpoints to create a functional relationship between $RFPF_{C2H6[NMC–FID]}$ and molar water concentration, downstream of the last sample dryer if any sample dryers are present. Use this functional relationship to determine the combined response factor and penetration fraction during the emission test.

(10) If required by this paragraph (d), repeat the steps in paragraphs (d)(6) through (9) of this section, but with the CH_4 analytical gas mixture instead of C_2H_6 and determine $RFPF_{CH4[NMC–FID]}$ instead.

(11) Use this combined C_2H_6 response factor and penetration fraction, $RFPF_{C2H6[NMC–FID]}$, and this combined CH_4 response factor and penetration fraction, $RFPF_{CH4[NMC–FID]}$, in emission calculations according to §§ 1065.660(b)(2)(i) and 1065.660(d)(1)(i).

(e) *Procedure for a FID calibrated with propane, bypassing the NMC.* If you use a single FID for THC and CH_4 determination with an NMC that is calibrated with propane, C_3H_8, by bypassing the NMC, determine its penetration fractions, $PF_{C2H6[NMC–FID]}$ and $PF_{CH4[NMC–FID]}$, as follows:

(1) Select CH_4 and C_2H_6 analytical gas mixtures and ensure that both mixtures meet the specifications of § 1065.750. Select a CH_4 concentration that you would use for spanning the FID during emission testing and select a C_2H_6 concentration that is typical of the peak NMHC concentration expected at the hydrocarbon standard and the C_2H_6 concentration typical of the peak total hydrocarbon (THC) concentration expected at the hydrocarbon standard or equal to the THC analyzer's span value. For CH_4 analyzers with multiple ranges, perform this procedure on the highest range used for emission testing.

(2) Start and operate the NMC according to the manufacturer's

instructions, including any temperature optimization.

(3) Confirm that the FID analyzer meets all the specifications of § 1065.360.

(4) Start and operate the FID analyzer according to the manufacturer's instructions.

(5) Zero and span the FID as you would during emission testing. Span the FID by bypassing the NMC and by using C_3H_8 span gas. Note that you must span the FID on a C_1 basis. For example, if your span gas has a propane reference value of 100 µmol/mol, the correct FID response to that span gas is 300 µmol/mol because there are three carbon atoms per C_3H_8 molecule.

(6) Introduce the C_2H_6 analytical gas mixture upstream of the NMC. Use good engineering judgment to address the effect of hydrocarbon contamination if your point of introduction is vastly different from the point of zero/span gas introduction.

(7) Allow time for the analyzer response to stabilize. Stabilization time may include time to purge the NMC and to account for the analyzer's response.

(8) While the analyzer measures a stable concentration, record 30 seconds of sampled data. Calculate the arithmetic mean of these data points.

(9) Reroute the flow path to bypass the NMC, introduce the C_2H_6 analytical gas mixture, and repeat the steps in paragraphs (e)(7) through (8) of this section.

(10) Divide the mean C_2H_6 concentration measured through the NMC by the mean C_2H_6 concentration measured after bypassing the NMC. The result is the C_2H_6 penetration fraction, $PF_{C2H6[NMC–FID]}$. Use this penetration fraction according to § 1065.660(b)(2)(ii), § 1065.660(d)(1)(ii), or § 1065.665, as applicable.

(11) Repeat the steps in paragraphs (e)(6) through (10) of this section, but with the CH_4 analytical gas mixture instead of C_2H_6. The result will be the CH_4 penetration fraction, $PF_{CH4[NMC–FID]}$. Use this penetration fraction according to § 1065.660(b)(2)(ii) or § 1065.665, as applicable.

(f) *Procedure for a FID calibrated with CH_4, bypassing the NMC.* If you use a FID with an NMC that is calibrated with CH_4, by bypassing the NMC, determine its combined C_2H_6 response factor and penetration fraction, $RFPF_{C2H6[NMC–FID]}$, as well as its CH_4 penetration fraction, $PF_{CH4[NMC–FID]}$, as follows:

(1) Select CH_4 and C_2H_6 analytical gas mixtures and ensure that both mixtures meet the specifications of § 1065.750. Select a CH_4 concentration that you would use for spanning the FID during emission testing and select a C_2H_6 concentration that is typical of the peak NMHC concentration expected at the hydrocarbon standard or equal to the THC analyzer's span value. For CH_4 analyzers with multiple ranges, perform this procedure on the highest range used for emission testing.

(2) Start and operate the NMC according to the manufacturer's instructions, including any temperature optimization.

(3) Confirm that the FID analyzer meets all the specifications of § 1065.360.

(4) Start and operate the FID analyzer according to the manufacturer's instructions.

(5) Zero and span the FID as you would during emission testing. Span the FID by bypassing the NMC and by using CH_4 span gas.

(6) Introduce the C_2H_6 analytical gas mixture upstream of the NMC. Use good engineering judgment to address the effect of hydrocarbon contamination if your point of introduction is vastly different from the point of zero/span gas introduction.

(7) Allow time for the analyzer response to stabilize. Stabilization time may include time to purge the NMC and to account for the analyzer's response.

(8) While the analyzer measures a stable concentration, record 30 seconds of sampled data. Calculate the arithmetic mean of these data points.

(9) Divide the mean C_2H_6 concentration by the reference concentration of C_2H_6, converted to a C_1 basis. The result is the combined C_2H_6 response factor and C_2H_6 penetration fraction, $RFPF_{C2H6[NMC–FID]}$. Use this combined C_2H_6 response factor and penetration fraction according to § 1065.660(b)(2)(iii) or (d)(1)(iii) or § 1065.665, as applicable.

(10) Introduce the CH_4 analytical gas mixture upstream of the NMC. Use good engineering judgment to address the effect of hydrocarbon contamination if your point of introduction is vastly different from the point of zero/span gas introduction.

(11) Allow time for the analyzer response to stabilize. Stabilization time may include time to purge the NMC and to account for the analyzer's response.

(12) While the analyzer measures a stable concentration, record 30 seconds of sampled data. Calculate the arithmetic mean of these data points.

(13) Reroute the flow path to bypass the NMC, introduce the CH_4 analytical gas mixture, and repeat the steps in paragraphs (e)(11) and (12) of this section.

(14) Divide the mean CH_4 concentration measured through the NMC by the mean CH_4 concentration measured after bypassing the NMC. The result is the CH_4 penetration fraction, $PF_{CH4[NMC–FID]}$. Use this CH_4 penetration fraction according to § 1065.660(b)(2)(iii) or (d)(1)(iii) or § 1065.665, as applicable.

(g) *Test gas humidification.* If you are generating gas mixtures as a function of the molar water concentration in the raw or diluted exhaust according to paragraph (d) of this section, then create a humidified test gas by bubbling the analytical gas mixture that meets the specifications in § 1065.750 through distilled H_2O in a sealed vessel or use a device that introduces distilled H_2O as vapor into a controlled gas flow. Determine H_2O concentration as an average value over intervals of at least 30 seconds. We recommend that you design your system so the wall temperatures in the transfer lines, fittings, and valves from the point where the mole fraction of H_2O in the humidified calibration gas, x_{H2Oref}, is measured to the analyzer are at least 5 °C above the local calibration gas dewpoint. Verify the humidity generator's uncertainty upon initial installation, within 370 days before verifying response factors and penetration fractions, and after major maintenance. Use the uncertainties from the calibration of the humidity generator's measurements and follow NIST Technical Note 1297 (incorporated by reference, see § 1065.1010) to verify that the amount of H_2O in x_{H2Oref} is determined within ±3% uncertainty, U_{xH2O}, for one of the options described in § 1065.750(a)(6)(i) or (ii). If the humidity generator requires assembly before use, after assembly follow the instrument manufacturer's instructions to check for leaks.

(1) If the sample does not pass through a dryer during emission testing, generate at least five different H_2O concentrations that cover the range from less than the minimum expected to greater than the maximum expected water concentration during testing. Use good engineering judgment to determine the target concentrations.

(2) If the sample passes through a dryer during emission testing, humidify your test gas to an H_2O level at or above the level determined in § 1065.145(e)(2) for that dryer and determine a single wet analyzer response to the dehumidified sample.

■ 115. Amend § 1065.366 by revising paragraph (b) to read as follows:

§ 1065.366 Interference verification for FTIR analyzers.

* * * * *

(b) *Measurement principles.* Certain species can interfere with analyzers by

causing a response similar to the target analyte. If the analyzer uses compensation algorithms that utilize measurements of other gases to meet this interference verification, simultaneously conduct these other measurements to test the compensation algorithms during the analyzer interference verification.

* * * * *

■ 116. Amend § 1065.375 by revising paragraphs (b) and (d)(9) to read as follows:

§ 1065.375 Interference verification for N_2O analyzers.

* * * * *

(b) *Measurement principles*. Certain species can positively interfere with analyzers by causing a response similar to N_2O. If the analyzer uses compensation algorithms that utilize measurements of other gases to meet this interference verification, simultaneously conduct these other measurements to test the compensation algorithms during the analyzer interference verification.

* * * * *

(d) * * *

(9) You may also run interference procedures separately for individual interference species. If the concentration of the interference species used are higher than the maximum levels expected during testing, you may scale down each observed interference value (the arithmetic mean of 30 second data described in paragraph (d)(7) of this section) by multiplying the observed interference by the ratio of the maximum expected concentration value to the actual value used during this procedure. You may run separate interference concentrations of H_2O (down to 0.025 mol/mol H_2O content) that are lower than the maximum levels expected during testing, but you must scale up the observed H_2O interference by multiplying the observed interference by the ratio of the maximum expected H_2O concentration value to the actual value used during this procedure. The sum of the scaled interference values must meet the tolerance for combined interference as specified in paragraph (c) of this section.

■ 117. Add § 1065.377 to read as follows:

§ 1065.377 Interference verification for NH_3 analyzers.

(a) *Scope and frequency*. See § 1065.277 to determine whether you need to verify the amount of interference after initial analyzer installation and after major maintenance.

(b) *Measurement principles*. Certain species can positively interfere with analyzers by causing a response similar to NH_3. If the analyzer uses compensation algorithms that utilize measurements of other gases to meet this interference verification, simultaneously conduct these other measurements to test the compensation algorithms during the analyzer interference verification.

(c) *System requirements*. Analyzers must have combined interference that is within (0.0±2.0) μmol/mol.

(d) *Procedure*. Perform the interference verification as follows:

(1) Start, operate, zero, and span the NH_3 analyzer as you would before an emission test. If the sample is passed through a dryer during emission testing, you may run this verification test with the dryer if it meets the requirements of § 1065.342. Operate the dryer at the same conditions as you will for an emission test. You may also run this verification test without the sample dryer.

(2) Create a humidified test gas using a multi component span gas that incorporates the target interference species and meets the specifications in § 1065.750 and a humidity generator device that introduces distilled H_2O as vapor into a controlled gas flow. If the sample does not pass through a dryer during emission testing, humidify your test gas to an H_2O level at or above the maximum expected during emission testing. If the sample passes through a dryer during emission testing, you must humidify your test gas to an H_2O level at or above the level determined in § 1065.145(e)(2) for that dryer. Use interference span gas concentrations that are at least as high as the maximum expected during testing.

(3) Introduce the humidified interference test gas into the sample system. You may introduce it downstream of any sample dryer, if one is used during testing.

(4) If the sample is not passed through a dryer during this verification test, measure the H_2O mole fraction, x_{H2O}, of the humidified interference test gas as close as possible to the inlet of the analyzer. For example, measure dewpoint, T_{dew}, and absolute pressure, p_{total}, to calculate x_{H2O}. Verify that the H_2O content meets the requirement in paragraph (d)(2) of this section. If the sample is passed through a dryer during this verification test, you must verify that the H_2O content of the humidified test gas downstream of the vessel meets the requirement in paragraph (d)(2) of this section based on either direct measurement of the H_2O content (*e.g.,* dewpoint and pressure) or an estimate based on the vessel pressure and temperature. Use good engineering judgment to estimate the H_2O content. For example, you may use previous direct measurements of H_2O content to verify the vessel's level of saturation.

(5) If a sample dryer is not used in this verification test, use good engineering judgment to prevent condensation in the transfer lines, fittings, or valves from the point where x_{H2O} is measured to the analyzer. We recommend that you design your system so that the wall temperatures in the transfer lines, fittings, and valves from the point where x_{H2O} is measured to the analyzer are at least 5 °C above the local sample gas dewpoint.

(6) Allow time for the analyzer response to stabilize. Stabilization time may include time to purge the transfer line and to account for analyzer response.

(7) While the analyzer measures the sample's concentration, record its output for 30 seconds. Calculate the arithmetic mean of this data. When performed with all the gases simultaneously, this is the combined interference.

(8) The analyzer meets the interference verification if the result of paragraph (d)(7) of this section meets the tolerance in paragraph (c) of this section.

(9) You may also run interference procedures separately for individual interference species. If the concentration of the interference species used are higher than the maximum levels expected during testing, you may scale down each observed interference value (the arithmetic mean of 30 second data described in paragraph (d)(7) of this section) by multiplying the observed interference by the ratio of the maximum expected concentration value to the actual value used during this procedure. You may run separate interference concentrations of H_2O (down to 0.025 mol/mol H_2O content) that are lower than the maximum levels expected during testing, but you must scale up the observed H_2O interference by multiplying the observed interference by the ratio of the maximum expected H_2O concentration value to the actual value used during this procedure. The sum of the scaled interference values must meet the tolerance for combined interference as specified in paragraph (c) of this section.

■ 118. Amend § 1065.512 by revising paragraphs (b)(1) and (2) to read as follows:

§ 1065.512 Duty cycle generation.

* * * * *

(b) * * *

(1) *Engine speed for variable-speed engines.* For variable-speed engines, normalized speed may be expressed as a percentage between warm idle speed, f_{nidle}, and maximum test speed, f_{ntest}, or speed may be expressed by referring to a defined speed by name, such as ''warm idle,'' ''intermediate speed,'' or ''A,'' ''B,'' or ''C'' speed. Section 1065.610 describes how to transform these normalized values into a sequence of reference speeds, f_{nref}. Running duty cycles with negative or small normalized speed values near warm idle speed may cause low-speed idle governors to activate and the engine torque to exceed the reference torque even though the operator demand is at a minimum. In such cases, we recommend controlling the dynamometer so it gives priority to follow the reference torque instead of the reference speed and let the engine govern the speed. Note that the cycle-validation criteria in § 1065.514 allow an engine to govern itself. This allowance permits you to test engines with enhanced-idle devices, to simulate the effects of transmissions such as automatic transmissions, and for engines with speed derate intended to limit exhaust mass flowrate.

(i) For example, an enhanced-idle device might be an idle speed value that is normally commanded only under cold-start conditions to quickly warm up the engine and aftertreatment devices. In this case, negative and very low normalized speeds will generate reference speeds below this higher enhanced-idle speed. Control the dynamometer so it gives priority to follow the reference torque, controlling the operator demand so it gives priority to follow reference speed and let the engine govern the speed when the operator demand is at minimum.

You may do either of the following when using enhanced-idle devices:

(A) While running an engine where the ECM broadcasts an enhanced-idle speed that is above the denormalized speed, use the broadcast speed as the reference speed. Use these new reference points for duty-cycle validation. This does not affect how you determine denormalized reference torque in paragraph (b)(2) of this section.

(B) If an ECM broadcast signal is not available, perform one or more practice cycles to determine the enhanced-idle speed as a function of cycle time. Generate the reference cycle as you normally would but replace any reference speed that is lower than the enhanced-idle speed with the enhanced-idle speed. This does not affect how you determine denormalized reference torque in paragraph (b)(2) of this section.

(ii) For example, an engine with power derate intended to limit exhaust mass flowrate might include controls that reduce engine speed under cold-start conditions, resulting in reduced exhaust flow that assists other aftertreatment thermal management technologies (*e.g.,* electric heater). In this case, normalized speeds will generate reference speeds above this engine speed derate. Control the dynamometer so it gives priority to follow the reference speed, controlling the operator demand so it gives priority to follow reference torque. You may do one of the following, as specified, when using engine derate devices:

(A) While running an engine where the ECM broadcasts engine derate speed that is below the denormalized speed, use the broadcast speed as the reference speed. Use these new reference points for duty-cycle validation. This does not affect how you determine denormalized reference torque in paragraph (b)(2) of this section.

(B) If an ECM broadcast signal is not available, perform one or more practice cycles to determine the engine derate speed as a function of cycle time. Generate the reference cycle as you normally would but replace any reference speed that is greater than the engine derate speed with the engine derate speed. This does not affect how you determine denormalized reference torque in paragraph (b)(2) of this section.

(2) *Engine torque for variable-speed engines.* For variable-speed engines, normalized torque is expressed as a percentage of the mapped torque at the corresponding reference speed. Section 1065.610 describes how to transform normalized torques into a sequence of reference torques, T_{ref}. Section 1065.610 also describes special requirements for modifying transient duty cycles for variable-speed engines intended primarily for propulsion of a vehicle with an automatic or manual transmission. Section 1065.610 also describes under what conditions you may command T_{ref} greater than the reference torque you calculated from a normalized duty cycle, which permits you to command T_{ref} values that are limited by a declared minimum torque. For any negative torque commands, command minimum operator demand and use the dynamometer to control engine speed to the reference speed, but if reference speed is so low that the idle governor activates, we recommend using the dynamometer to control torque to zero, CITT, or a declared minimum torque as appropriate. Note that you may omit power and torque points during motoring from the cycle-validation criteria in § 1065.514. Also, use the maximum mapped torque at the minimum mapped speed as the maximum torque for any reference speed at or below the minimum mapped speed.

* * * * *

■ 119. Amend § 1065.530 by revising paragraphs (b)(4), (9), and (11) to read as follows:

§ 1065.530 Emission test sequence.

* * * * *

(b) * * *

(4) Pre-heat or pre-cool heat exchangers in the sampling system to within their operating temperature tolerances for a test interval.

* * * * *

(9) Select gas analyzer ranges. You may automatically or manually switch gas analyzer ranges during a test interval only if switching is performed by changing the span over which the digital resolution of the instrument is applied. During a test interval you may not switch the gains of an analyzer's analog operational amplifier(s).

* * * * *

(11) We recommend that you verify gas analyzer responses after zeroing and spanning by sampling a calibration gas that has a concentration near one-half of the span gas concentration. Based on the results and good engineering judgment, you may decide whether or not to re-zero, re-span, or re-calibrate a gas analyzer before starting a test interval.

* * * * *

■ 120. Amend § 1065.601 by revising paragraph (c)(1)(i) and removing and reserving paragraph (c)(1)(ii) to read as follows:

§ 1065.601 Overview.

* * * * *

(c) * * *

(1) * * *

(i) ISO 8178–4 Section 9.1.6, NO_X Correction for Humidity and Temperature. See § 1065.670 for approved methods for humidity corrections.

(ii) [Reserved].

* * * * *

■ 121. Amend § 1065.602 by adding paragraph (m) to read as follows:

§ 1065.602 Statistics.

* * * * *

(m) *Median.* Determine median, *M*, as described in this paragraph (m). Arrange the data points in the data set in increasing order where the smallest value is ranked 1, the second-smallest value is ranked 2, etc.

(1) For even numbers of data points:

(i) Determine the rank of the data point whose value is used to determine the median as follows:

$$i = \frac{N}{2}$$

Where:

i = an indexing variable that represents the rank of the data point whose value is used to determine the median.

N = the number of data points in the set.

Example:

$$N = 4$$
$$y_1 = 41.515$$
$$y_2 = 41.780$$
$$y_3 = 41.861$$
$$y_4 = 41.902$$
$$i = \frac{4}{2}$$
$$i = 2$$

(ii) Determine the median as the average of the data point *i* and the data point *i* + 1 as follows:

$$M = \frac{y_i + y_{i+1}}{2}$$

Example:

$$y_2 = 41.780$$
$$y_3 = 41.861$$
$$M = \frac{41.780 + 41.861}{2}$$
$$M = 41.821$$

(2) For odd numbers of data points, determine the rank of the data point whose value is the median and the corresponding median value as follows:

$$i = \frac{N + 1}{2}$$

Where:

i = an indexing variable that represents the rank of the data point whose value is the median.

N = the number of data points in the set.

Example:

$$N = 3$$
$$y_1 = 41.515$$
$$y_2 = 41.780$$
$$y_3 = 41.861$$
$$i = \frac{3 + 1}{2}$$
$$i = 2$$
$$M = 41.780$$

■ 122. Amend § 1065.655 by revising the section heading and paragraphs (a), (b)(4), and (e)(4) introductory text to read as follows:

§ 1065.655 Chemical balances of carbon-containing fuel, DEF, intake air, and exhaust.

(a) *General.* Chemical balances of fuel, intake air, and exhaust may be used to calculate flows, the amount of water in their flows, and the wet concentration of constituents in their flows. Use the chemical balance calculations in this section for carbon-containing fuels. For fuels other than carbon-containing fuels use the chemical balance calculations of section § 1065.656. With one flow rate of either fuel, intake air, or exhaust, you may use chemical balances to determine the flows of the other two. For example, you may use chemical balances along with either intake air or fuel flow to determine raw exhaust flow. Note that chemical balance calculations allow measured values for the flow rate of diesel exhaust fluid for engines with urea-based selective catalytic reduction.

(b) * * *

(4) The amount of water in a raw or diluted exhaust flow, χ_{H2Oexh}, when you do not measure the amount of water to correct for the amount of water removed by a sampling system. Note that you may not use the FTIR based water measurement method in § 1065.257 to determine χ_{H2Oexh}. Correct for removed water according to § 1065.659.

* * * * *

(e) * * *

(4) Calculate α, β, γ, and δ as described in this paragraph (e)(4). If your fuel mixture contains fuels other than carbon-containing fuel, calculate those fuels' mass fractions w_H, w_C, w_O, and w_N as described in § 1065.656(d) and set the fuels' mass fraction w_S to zero. Calculate α, β, γ, and δ using the following equations:

* * * * *

■ 123. Add § 1065.656 to read as follows:

§ 1065.656 Chemical balances of fuels other than carbon-containing fuel, DEF, intake air, and exhaust.

(a) *General.* Chemical balances of fuel, DEF, intake air, and exhaust may be used to calculate flows, the amount of water in their flows, and the wet concentration of constituents in their flows. Use the chemical balance calculations in this section for fuels other than carbon-containing fuels. For carbon-containing fuels, use the chemical balance calculations in section § 1065.655, including any dual-fuels or flexible-fuels where one of the fuels contains carbon. With one flow rate of either fuel, intake air, or exhaust, you may use chemical balances to determine the flows of the other two. For example, you may use chemical balances along with either intake air or fuel flow to determine raw exhaust flow. Note that chemical balance calculations allow measured values for the flow rate of diesel exhaust fluid for engines with urea-based selective catalytic reduction.

(b) *Procedures that require chemical balances.* We require chemical balances when you determine the following:

(1) A value proportional to total work, $\tilde{W}$ when you choose to determine brake-specific emissions as described in § 1065.650(f).

(2) Raw exhaust molar flow rate either from measured intake air molar flow rate or from fuel mass flow rate as described in paragraph (f) of this section.

(3) Raw exhaust molar flow rate from measured intake air molar flow rate and dilute exhaust molar flow rate as described in paragraph (g) of this section.

(4) The amount of water in a raw or diluted exhaust flow, χ_{H2Oexh}, when you do not measure the amount of water to correct for the amount of water removed by a sampling system. Correct for removed water according to § 1065.659.

(5) The calculated total dilution air flow when you do not measure dilution air flow to correct for background emissions as described in § 1065.667(c) and (d).

(c) *Chemical balance procedure.* The calculations for a chemical balance involve a system of equations that require iteration. We recommend using a computer to solve this system of equations. You must guess the initial values of two of the following quantities: the amount of water in the measured flow, $\chi_{H2Oexhdry}$, the amount of hydrogen in the measured flow, $\chi_{H2exhdry}$, the fraction of dilution air in diluted exhaust, $\chi_{dil/exhdry}$, and the amount of intake air required to produce actual combustion products per mole of dry exhaust, $\chi_{int/exhdry}$. You may use time-weighted mean values of intake air humidity and dilution air humidity in the chemical balance; as long as your intake air and dilution air humidities remain within tolerances of ±0.0025 mol/mol of their respective mean values over the test interval. For each emission concentration, χ, and amount of water, χ_{H2Oexh}, you must determine their completely dry concentrations, χ_{dry} and $\chi_{H2Oexhdry}$. You must also use your fuel mixture's atomic carbon-to-hydrogen ratio, τ, oxygen-to-hydrogen ratio, ϕ, and nitrogen-to-hydrogen ratio, ω; you may optionally account for diesel exhaust fluid (or other fluids injected into the exhaust), if applicable. You may calculate τ, ϕ, and ω based on measured

fuel composition or based on measured fuel and diesel exhaust fluid (or other fluids injected into the exhaust) composition together, as described in paragraph (e) of this section. You may alternatively use any combination of default values and measured values as described in paragraph (e) of this section. Use the following steps to complete a chemical balance:

(1) Convert your measured concentrations such as, $\chi_{H2Omeas}$, χ_{O2meas}, χ_{H2meas}, χ_{NOmeas}, $\chi_{NO2meas}$, $\chi_{NH3meas}$, and χ_{H2Oint}, to dry concentrations by dividing them by one minus the amount of water present during their respective measurements; for example: $\chi_{H2Omeas}$, $\chi_{H2OxO2meas}$, $\chi_{H2OxNOmeas}$, and χ_{H2Oint}. If the amount of water present during a ''wet'' measurement is the same as an unknown amount of water in the exhaust flow, χ_{H2Oexh}, iteratively solve for that value in the system of equations. If you measure only total NO_X and not NO and NO_2 separately, use good engineering judgment to estimate a split in your total NO_X concentration between NO and NO_2 for the chemical balances. For example, if you measure emissions from a stoichiometric combustion engine, you may assume all NO_X is NO. For a lean-burn combustion engine, you may assume that your molar concentration of NO_X, χ_{NOx}, is 75% NO and 25% NO_2. For NO_2 storage aftertreatment systems, you may assume χ_{NOx} is 25% NO and 75% NO_2. Note that for calculating the mass of NO_X emissions, you must use the molar mass of NO_2 for the effective molar mass of all NO_X species, regardless of the actual NO_2 fraction of NO_X.

(2) Enter the equations in paragraph (c)(4) of this section into a computer program to iteratively solve for $\chi_{H2Oexhdry}$, $\chi_{H2exhdry}$, $\chi_{dil/exhdry}$, and $\chi_{int/exhdry}$. Use good engineering judgment to guess initial values for $\chi_{H2Oexhdry}$, $\chi_{H2exhdry}$, $\chi_{dil/exhdry}$, and $\chi_{int/exhdry}$. We recommend guessing an initial amount of water that is about twice the amount of water in your intake or dilution air. We recommend guessing an initial amount of hydrogen of 0 mol/mol. We recommend guessing an initial $\chi_{int/exhdry}$ of 1 mol/mol. We also recommend guessing an initial, $\chi_{dil/exhdry}$ of 0.8 mol/mol. Iterate values in the system of equations until the most recently updated guesses are all within ±1% or ±1 μmol/mol, whichever is larger, of their respective most recently calculated values.

(3) Use the following symbols and subscripts in the equations for performing the chemical balance calculations in this paragraph (c):

TABLE 1 OF § 1065.656—SYMBOLS AND SUBSCRIPTS FOR CHEMICAL BALANCE EQUATIONS

$\chi_{[emission]meas}$	Amount of measured emission in the sample at the respective gas analyzer.
$\chi_{[emission]exh}$	Amount of emission per dry mole of exhaust.
$\chi_{[emission]exhdry}$	Amount of emission per dry mole of dry exhaust.
$\chi_{H2O[emission]meas}$	Amount of H_2O in sample at emission-detection location; measure or estimate these values according to § 1065.145(e)(2).
$\chi_{dil/exh}$	Amount of dilution gas or excess air per mole of exhaust.
$\chi_{dil/exhdry}$	amount of dilution gas and/or excess air per mole of dry exhaust.
$\chi_{Hcombdry}$	Amount of hydrogen from fuel and any injected fluids in the exhaust per mole of dry exhaust.
$\chi_{int/exhdry}$	Amount of intake air required to produce actual combustion products per mole of dry (raw or diluted) exhaust.
$\chi_{raw/exhdry}$	Amount of undiluted exhaust, without excess air, per mole of dry (raw or diluted) exhaust.
χ_{CO2int}	Amount of intake air CO_2 per mole of intake air.
$\chi_{CO2intdry}$	amount of intake air CO_2 per mole of dry intake air; you may use xCO2intdry = 375 μmol/mol, but we recommend measuring the actual concentration in the intake air.
χ_{H2Oint}	Amount of H_2O in the intake air, based on a humidity measurement of intake air.
$\chi_{H2Ointdry}$	Amount of intake air H_2O per mole of dry intake air.
χ_{O2int}	Amount of intake air O2 per mole of intake air.
χ_{CO2dil}	Amount of dilution gas CO_2 per mole of dilution gas.
$\chi_{CO2dildry}$	Amount of dilution gas CO_2 per mole of dry dilution gas; if you use air as diluent, you may use xCO2dildry = 375 μmol/mol, but we recommend measuring the actual concentration in the dilution gas.
χ_{H2Odil}	Amount of dilution gas H_2O per mole of dilution gas.
$\chi_{H2Odildry}$	Amount of dilution gas H_2O per mole of dry dilution gas.
τ	Atomic carbon-to-hydrogen ratio of the fuel (or mixture of test fuels) and any injected fluids.
ϕ	Atomic oxygen-to-hydrogen ratio of the fuel (or mixture of test fuels) and any injected fluids.
ω	Atomic nitrogen-to-hydrogen ratio of the fuel (or mixture of test fuels) and any injected fluids.

(4) Use the equations specified in this section to iteratively solve for $\chi_{int/exhdry}$, $\chi_{dil/exhdry}$, $\chi_{H2exhdry}$, and $\chi_{H2Oexhdry}$. For some quantities multiple equations are provided. The calculation of xO2exhdry is only required when xO2meas is measured. The calculation of $\chi_{NH3exhdry}$ is only required for engines that use ammonia as fuel, for all other fuels $\chi_{NH3exhdry}$ may be set to zero.

$$x_{\mathrm{dil/exh}} = 1 - \frac{x_{\mathrm{raw/exhdry}}}{1 + x_{\mathrm{H2Oexhdry}}}$$

Eq. 1065.656-1

$$x_{\mathrm{dil/exhdry}} = \frac{x_{\mathrm{dil/exh}}}{1 - x_{\mathrm{H2Oexh}}}$$

Eq. 1065.656-2

$$x_{\mathrm{H2exhdry}} = \frac{x_{\mathrm{H2meas}}}{1 - x_{\mathrm{H2OH2meas}}}$$

Eq. 1065.656-3 (see Table 2 of § 1065.656)

$$x_{\mathrm{H2exhdry}} = 2 \cdot \left(x_{\mathrm{raw/exhdry}} - x_{\mathrm{int/exhdry}}\right) - \left(\frac{1}{2} + \varphi + \omega\right) \cdot \mathrm{x}_{\mathrm{Hcombdry}} + \frac{1}{2} \cdot x_{\mathrm{NH3exhdry}} + x_{\mathrm{NO2exhdry}}$$

Eq. 1065.656-4 (see Table 2 of § 1065.656)

$$x_{\mathrm{H2Oexh}} = \frac{x_{\mathrm{H2Oexhdry}}}{1 + x_{\mathrm{H2Oexhdry}}}$$

Eq. 1065.656-5

$$x_{\mathrm{H2Oexhdry}} = \frac{x_{\mathrm{H2Omeas}}}{1 - x_{\mathrm{H2Omeas}}}$$

Eq. 1065.656-6 (see Table 2 of § 1065.656)

$$x_{\mathrm{H2Oexhdry}} = \frac{1}{2} \cdot x_{\mathrm{Hcombdry}} - x_{\mathrm{H2exhdry}} - \frac{3}{2} \cdot x_{\mathrm{NH3exhdry}} + x_{\mathrm{H2Odil}} \cdot x_{\mathrm{dil/exhdry}} + x_{\mathrm{H2Oint}} \cdot x_{\mathrm{int/exhdry}}$$

Eq. 1065.656-7 (see Table 2 of § 1065.656)

$$x_{\mathrm{Hcombdry}} = 2 \cdot x_{\mathrm{H2Oexhdry}} + 2 \cdot x_{\mathrm{H2exhdry}} + 3 \cdot x_{\mathrm{NH3exhdry}} - 2 \cdot x_{\mathrm{H2Odil}} \cdot x_{\mathrm{dil/exhdry}} - 2 \cdot x_{\mathrm{H2Oint}} \cdot x_{\mathrm{int/exhdry}}$$

Eq. 1065.656-8 (see Table 2 of § 1065.656)

$$x_{\mathrm{Hcombdry}} = \frac{2 \cdot \left(x_{\mathrm{raw/exhdry}} - x_{\mathrm{int/exhdry}}\right) - x_{\mathrm{H2exhdry}} + \frac{1}{2} \cdot x_{\mathrm{NH3exhdry}} + x_{\mathrm{NO2exhdry}}}{\frac{1}{2} + \varphi + \omega}$$

Eq. 1065.656-9 (see Table 2 of § 1065.656)

$$x_{\mathrm{int/exhdry}} = \frac{1}{2 \cdot x_{\mathrm{O2int}}} \cdot \left(\left(2 \cdot \tau + \frac{1}{2} - \varphi\right) \cdot x_{\mathrm{Hcombdry}} - x_{\mathrm{H2exhdry}} - \frac{3}{2} \cdot x_{\mathrm{NH3exhdry}} + x_{\mathrm{NOexhdry}} + 2 \cdot \mathrm{x}_{\mathrm{NO2exhdry}}\right)$$

Eq. 1065.656-10

$$x_{\mathrm{NH3exhdry}} = \frac{x_{\mathrm{NH3meas}}}{1 - x_{\mathrm{H2ONH3meas}}}$$

Eq. 1065.656-11

$$x_{\mathrm{NOexhdry}} = \frac{x_{\mathrm{NOmeas}}}{1 - x_{\mathrm{H2ONOmeas}}}$$

Eq. 1065.656-12

$$x_{\mathrm{NO2exhdry}} = \frac{x_{\mathrm{NO2meas}}}{1 - x_{\mathrm{H2ONO2meas}}}$$

Eq. 1065.656-13

$$x_{\mathrm{O2exhdry}} = \frac{x_{\mathrm{O2meas}}}{1 - x_{\mathrm{H2OO2meas}}}$$

Eq. 1065.656-14 (see Table 2 of § 1065.656)

$$x_{\mathrm{raw/exhdry}} = 1 + x_{\mathrm{H2Oexhdry}} - \frac{1 + x_{\mathrm{H2Odildry}}}{0.209820 - x_{\mathrm{CO2dildry}}} \cdot x_{\mathrm{O2exhdry}}$$

Eq. 1065.656-15 (see Table 2 of § 1065.656)

$$x_{\mathrm{raw/exhdry}} = \left(\frac{1}{4} + \frac{\varphi}{2} + \frac{\omega}{2}\right) \cdot x_{\mathrm{Hcombdry}} + \frac{1}{2} \cdot x_{\mathrm{H2exhdry}} - \frac{1}{4} \cdot x_{\mathrm{NH3exhdry}} - \frac{1}{2} x_{\mathrm{NO2exhdry}} + x_{\mathrm{int/exhdry}}$$

Eq. 1065.656-16 (see Table 2 of § 1065.656)

$$x_{\mathrm{CO2intdry}} = \frac{x_{\mathrm{CO2int}}}{1 - x_{\mathrm{H2Oint}}}$$

Eq. 1065.656-17

$$x_{\mathrm{H2Ointdry}} = \frac{x_{\mathrm{H2Oint}}}{1 - x_{\mathrm{H2Oint}}}$$

Eq. 1065.656-18

$$x_{\mathrm{O2int}} = \frac{0.209820 - x_{\mathrm{CO2intdry}}}{1 + x_{\mathrm{H2Ointdry}}}$$

Eq. 1065.656-19

$$x_{\mathrm{CO2dildry}} = \frac{x_{\mathrm{CO2dil}}}{1 - x_{\mathrm{H2Odil}}}$$

Eq. 1065.656-20

$$x_{\mathrm{H2Odildry}} = \frac{x_{\mathrm{H2Odil}}}{1 - x_{\mathrm{H2Odil}}}$$

Eq. 1065.656-21

(5) Depending on your measurements, use the equations and guess the quantities specified in Table 2 of this section:

TABLE 2 OF § 1065.656—CHEMICAL BALANCE EQUATIONS FOR DIFFERENT MEASUREMENTS

When measuring	Guess	Calculate
(i) χ_{O2meas} and $\chi_{H2Omeas}$	$\chi_{int/exhdry}$ and $\chi_{H2exhdry}$	(A) $\chi_{H2exhdry}$ using Eq. 1065.656–4 (B) $\chi_{H2Oexhdry}$ using Eq. 1065.656–6 (C) $\chi_{Hcombdry}$ using Eq. 1065.656–8 (D) $\chi_{O2exhdry}$ using Eq. 1065.656–14 (E) $\chi_{raw/exhdry}$ using Eq. 1065.656–15
(ii) χ_{O2meas} and χ_{H2meas}	$\chi_{int/exhdry}$ and $\chi_{H2Oexhdry}$	(A) $\chi_{H2exhdry}$ using Eq. 1065.656–3 (B) $\chi_{H2Oexhdry}$ using Eq. 1065.656–7 (C) $\chi_{Hcombdry}$ using Eq. 1065.656–9 (D) $\chi_{O2exhdry}$ using Eq. 1065.656–14 (E) $\chi_{raw/exhdry}$ using Eq. 1065.656–15
(iii) $\chi_{H2Omeas}$ and χ_{H2meas}	$\chi_{int/exhdry}$ and $\chi_{dil/exhdry}$	(A) $\chi_{H2exhdry}$ using Eq. 1065.656–3 (B) $\chi_{H2Oexhdry}$ using Eq. 1065.656–6 (C) $\chi_{Hcombdry}$ using Eq. 1065.656–8 (D) $\chi_{raw/exhdry}$ using Eq. 1065.656–16

(d) *Mass fractions of fuel.* Determine the mass fractions of fuel, w_H, w_C, w_O, and w_N, based on the fuel properties as determined in paragraph (e) of this section, optionally accounting for diesel exhaust fluid's contribution to τ, ϕ, and ω, or other fluids injected into the exhaust, if applicable (for example, the engine is equipped with an emission control system that utilizes DEF). Calculate w_H, w_C, w_O, and $_N$ using the following equations:

$$w_H = \frac{1 \cdot M_H}{1 \cdot M_H + \tau \cdot M_C + \varphi \cdot M_O + \omega \cdot M_N}$$

Eq. 1065.656-22

$$w_C = \frac{\tau \cdot M_C}{1 \cdot M_H + \tau \cdot M_C + \varphi \cdot M_O + \omega \cdot M_N}$$

Eq. 1065.656-23

$$w_O = \frac{\varphi \cdot M_O}{1 \cdot M_H + \tau \cdot M_C + \varphi \cdot M_O + \omega \cdot M_N}$$

Eq. 1065.656-24

$$w_N = \frac{\omega \cdot M_N}{1 \cdot M_H + \tau \cdot M_C + \varphi \cdot M_O + \omega \cdot M_N}$$

Eq. 1065.656-25

Where:

w_H = hydrogen mass fraction of the fuel (or mixture of test fuels) and any injected fluids.

w_C = carbon mass fraction of the fuel (or mixture of test fuels) and any injected fluids.

w_O = oxygen mass fraction of the fuel (or mixture of test fuels) and any injected fluids.

w_N = nitrogen mass fraction of the fuel (or mixture of test fuels) and any injected fluids.

M_H = molar mass of hydrogen.

τ = atomic carbon-to- hydrogen ratio of the fuel (or mixture of test fuels) and any injected fluids.

M_C = molar mass of carbon.

ϕ = atomic oxygen-to-hydrogen ratio of the fuel (or mixture of test fuels) and any injected fluids.

M_O = molar mass of oxygen.

ω = atomic sulfur-to-hydrogen ratio of the fuel (or mixture of test fuels) and any injected fluids.

M_N = molar mass of nitrogen.

(e) *Fuel and diesel exhaust fluid composition.* Determine fuel and diesel exhaust fluid composition represented by τ, ϕ, and ω, as described in this paragraph (e). When using measured fuel or diesel exhaust fluid properties, you must determine values for τ, ϕ, and ω in all cases. If you determine compositions based on measured values and the default value listed in Table 3 of this section is zero, you may set τ, ϕ, and ω to zero; otherwise determine τ, ϕ, and ω based on measured values. Determine elemental mass fractions and values for τ, ϕ, and ω as follows:

(1) For fuel and diesel exhaust fluid, use the default values for τ, ϕ, and ω in Table 3 of this section, or use good engineering judgment to determine those values based on measurement.

(2) For nonconstant fuel mixtures, you must account for the varying proportions of the different fuels. This paragraph (e)(2) generally applies for dual-fuel and flexible-fuel engines, but it also applies if diesel exhaust fluid is injected in a way that is not strictly proportional to fuel flow. Account for these varying concentrations either with a batch measurement that provides averaged values to represent the test interval, or by analyzing data from continuous mass rate measurements. Application of average values from a batch measurement generally applies to

situations where one fluid is a minor component of the total fuel mixture; consistent with good engineering judgment.

(4) Calculate τ, φ and ω using the following equations;

$$\tau = \frac{M_{\mathrm{H}}}{M_{\mathrm{C}}} \cdot \frac{\sum_{j=1}^{N} \dot{m}_j \cdot \mathrm{w}_{\mathrm{C}j}}{\sum_{j=1}^{N} \dot{m}_j \cdot \mathrm{w}_{\mathrm{H}j}}$$

Eq. 1065.656-26

$$\varphi = \frac{M_{\mathrm{H}}}{M_{\mathrm{O}}} \cdot \frac{\sum_{j=1}^{N} \dot{m}_j \cdot \mathrm{w}_{\mathrm{O}j}}{\sum_{j=1}^{N} \dot{m}_j \cdot \mathrm{w}_{\mathrm{H}j}}$$

Eq. 1065.656-27

$$\omega = \frac{M_{\mathrm{H}}}{M_{\mathrm{N}}} \cdot \frac{\sum_{j=1}^{N} \dot{m}_j \cdot \mathrm{w}_{\mathrm{N}j}}{\sum_{j=1}^{N} \dot{m}_j \cdot \mathrm{w}_{\mathrm{H}j}}$$

Eq. 1065.656-28

Where:

N = total number of fuels and injected fluids over the duty cycle.

j = an indexing variable that represents one fuel or injected fluid, starting with j = 1.

$\dot{m}_j$ = the mass flow rate of the fuel or any injected fluid j. For applications using a single fuel and no DEF fluid, set this value to 1. For batch measurements, divide the total mass of fuel over the test interval duration to determine a mass rate.

$w_{\mathrm{H}j}$ = hydrogen mass fraction of fuel or any injected fluid j.

$w_{\mathrm{C}j}$ = carbon mass fraction of fuel or any injected fluid j.

$w_{\mathrm{O}j}$ = oxygen mass fraction of fuel or any injected fluid j.

$w_{\mathrm{N}j}$ = nitrogen mass fraction of fuel or any injected fluid j.

(4) Table 3 follows:

TABLE 3 OF § 1065.656—DEFAULT VALUES OF τ, ϕ, AND ω

Fuel or injected fluid	Atomic carbon, oxygen, and nitrogen-to-hydrogen ratios $HC\tau O\phi N\omega$
Hydrogen	$HC_0O_0N_0$
Ammonia	$HC_0O_0N_{0.333}$
Diesel exhaust fluid	$HC_{0.056}O_{0.444}N_{0.112}$

(f) *Calculated raw exhaust molar flow rate from measured intake air molar flow rate or fuel mass flow rate.* You may calculate the raw exhaust molar flow rate from which you sampled emissions, $\dot{n}_{\mathrm{exh}}$, based on the measured intake air molar flow rate, $\dot{n}_{\mathrm{int}}$, or the measured fuel mass flow rate, $\dot{m}_{\mathrm{fuel}}$, and the values calculated using the chemical balance in paragraph (c) of this section. The chemical balance must be based on raw exhaust gas concentrations. Solve for the chemical balance in paragraph (c) of this section at the same frequency that you update and record $\dot{n}_{\mathrm{int}}$ or $\dot{m}_{\mathrm{fuel}}$. For laboratory tests, calculating raw exhaust molar flow rate using measured fuel mass flow rate is valid only for steady-state testing. See § 1065.915(d)(5)(iv) for application to field testing.

(1) *Crankcase flow rate.* If engines are not subject to crankcase controls under the standard-setting part, you may calculate raw exhaust flow based on $\dot{n}_{\mathrm{int}}$ or $\dot{m}_{\mathrm{fuel}}$ using one of the following:

(i) You may measure flow rate through the crankcase vent and subtract it from the calculated exhaust flow.

(ii) You may estimate flow rate through the crankcase vent by engineering analysis as long as the uncertainty in your calculation does not adversely affect your ability to show that your engines comply with applicable emission standards.

(iii) You may assume your crankcase vent flow rate is zero.

(2) *Intake air molar flow rate calculation.* Calculate $\dot{n}_{\mathrm{exh}}$ based on $\dot{n}_{\mathrm{int}}$ using the following equation:

$$\dot{n}_{\mathrm{exh}} = \frac{\dot{n}_{\mathrm{int}}}{\left(1 + \frac{\left(x_{\mathrm{int/exhdry}} - x_{\mathrm{raw/exhdry}}\right)}{\left(1 + x_{\mathrm{H2Oexhdry}}\right)}\right)}$$

Eq. 1065.656-29

Where:

$\dot{n}_{\mathrm{exh}}$ = raw exhaust molar flow rate from which you measured emissions.

$\dot{n}_{\mathrm{int}}$ = intake air molar flow rate including humidity in intake air.

Example:

$$\dot{n}_{\mathrm{int}} = 3.780 \text{ mol/s}$$
$$x_{\mathrm{int/exhdry}} = 0.69021 \text{ mol/mol}$$
$$x_{\mathrm{raw/exhdry}} = 1.10764 \text{ mol/mol}$$
$$x_{\mathrm{H20exhdry}} = 107.64 \text{ mmol/mol} = 0.10764 \text{ mol/mol}$$
$$\dot{n}_{\mathrm{exh}} = \frac{3.780}{\left(1 + \frac{(0.69021 - 1.10764)}{(1 + 0.10764)}\right)}$$
$$\dot{n}_{\mathrm{exh}} = 6.066 \text{ mol/s}$$

(3) *Fluid mass flow rate calculation.* This calculation may be used only for steady-state laboratory testing. See § 1065.915(d)(5)(iv) for application to field testing. Calculate $\dot{n}_{\mathrm{exh}}$ based on $\dot{m}_j$ using the following equation:

$$\dot{n}_{\mathrm{exh}} = \frac{1 + x_{\mathrm{H2Oexhdry}}}{M_{\mathrm{H}} \cdot x_{\mathrm{Hcombdry}}} \cdot \sum_{j=1}^{N} \dot{m}_{\mathrm{j}} \cdot \mathrm{w}_{\mathrm{H}_j}$$

Eq. 1065.656-30

Where:

$\dot{n}_{\mathrm{exh}}$ = raw exhaust molar flow rate from which you measured emissions.

j = an indexing variable that represents one fuel or injected fluid, starting with j = 1.

N = total number of fuels and injected fluids over the duty cycle.

$\dot{m}_j$ = the mass flow rate of the fuel or any injected fluid j.

$w_{\mathrm{H}f}$ = hydrogen mass fraction of the fuel and any injected fluid j.

Example:

$x_{\mathrm{H20exhdry1}}$ = 107.64 mmol/mol = 0.10764 mol/mol

M_{H} = 1.00794 g/mol

$x_{\mathrm{Ccombdry1}}$ = 99.87 mmol/mol = 0.09987 mol/mol

$\dot{m}_1$ = 7.559 g/s

w_{H1} = 0.07293 g/g

N = 1

j = 1

$$\dot{n}_{\mathrm{exh}} = \frac{1 + 0.10764}{1.00794 \cdot 0.09987} \cdot 7.559 \cdot 0.07293$$

$\dot{n}_{\mathrm{exh}}$ = 6.066 mol/s

(g) *Calculated raw exhaust molar flow rate from measured intake air molar flow rate, dilute exhaust molar flow rate, and dilute chemical balance.* You may calculate the raw exhaust molar flow rate, $\dot{n}_{\mathrm{exh}}$, based on the measured intake air molar flow rate, $\dot{n}_{\mathrm{int}}$, the measured dilute exhaust molar flow rate, $\dot{n}_{\mathrm{dexh}}$, and the values calculated using the chemical balance in paragraph (c) of this section. Note that the chemical balance must be based on dilute exhaust gas concentrations. For continuous-flow calculations, solve for the chemical balance in paragraph (c) of this section at the same frequency that you update and record $\dot{n}_{\mathrm{int}}$ and $\dot{n}_{\mathrm{dexh}}$. This calculated $\dot{n}_{\mathrm{dexh}}$ may be used for the PM dilution ratio verification in § 1065.546; the calculation of dilution air molar flow rate in the background correction in § 1065.667; and the calculation of mass of emissions in § 1065.650(c) for species that are measured in the raw exhaust.

(1) *Crankcase flow rate.* If engines are not subject to crankcase controls under the standard-setting part, calculate raw exhaust flow as described in paragraph (f)(1) of this section.

(2) *Dilute exhaust and intake air molar flow rate calculation.* Calculate $\dot{n}_{\mathrm{exh}}$ as follows:

$$\dot{n}_{\mathrm{exh}} = \left(x_{\mathrm{raw/exhdry}} - x_{\mathrm{int/exhdry}}\right) \cdot \left(1 - x_{\mathrm{H2Oexh}}\right) \cdot \dot{n}_{\mathrm{dexh}} + \dot{n}_{\mathrm{int}}$$

Eq. 1065.656-31

Example:

$\dot{n}_{\mathrm{int}}$ = 7.930 mol/s

$\chi_{\mathrm{raw/exhdry}}$ = 0.1544 mol/mol

$\chi_{\mathrm{int/exhdry}}$ = 0.1451 mol/mol

χ_{H2Oexh} = 32.46 mmol/mol = 0.03246 mol/mol

$\dot{n}_{\mathrm{dexh}}$ = 49.02 mol/s

$\dot{n}_{\mathrm{exh}}$ = (0.1544 − 0.1451) · (1 − 0.03246) · 49.02 + 7.930 = 0.4411 + 7.930 = 8.371 mol/s

■ 124. Amend § 1065.660 by revising paragraphs (b)(2) and (3) introductory text, (c)(1)(ii) and (2) introductory text, (d), and (e) to read as follows:

§ 1065.660 THC, NMHC, NMNEHC, CH_4, and C_2H_6 determination.

* * * * *

(b) * * *

(2) For a nonmethane cutter (NMC), calculate χ_{NMHC} using the NMC's penetration fractions, response factors, and/or combined penetration fractions and response factors as described in § 1065.365, the THC FID's CH_4 response factor, $RF_{\mathrm{CH4[THC-FID]}}$, from § 1065.360, the initial THC contamination and dry-to-wet corrected THC concentration, $\chi_{\mathrm{THC[THC-FID]cor}}$, as determined in paragraph (a) of this section, and the dry-to-wet corrected CH_4 concentration, $\chi_{\mathrm{THC[NMC-FID]cor}}$, optionally corrected for initial THC contamination as determined in paragraph (a) of this section.

(i) Use the following equation for an NMC configured as described in § 1065.365(d):

$$x_{\mathrm{NMHC}} = \frac{x_{\mathrm{THC[THC\text{-}FID]cor}} \cdot RFPF_{\mathrm{CH4[NMC-FID]}} - x_{\mathrm{THC[NMC\text{-}FID]cor}} \cdot RF_{\mathrm{CH4[THC\text{-}FID]}}}{RFPF_{\mathrm{CH4[NMC-FID]}} - RFPF_{\mathrm{C2H6[NMC\text{-}FID]}} \cdot RF_{\mathrm{CH4[THC\text{-}FID]}}}$$

Eq. 1065.660-2

Where:

χ_{NMHC} = concentration of NMHC.

$\chi_{THC[THC-FID]cor}$ = concentration of THC, initial THC contamination and dry-to-wet corrected, as measured by the THC FID during sampling while bypassing the NMC.

$\chi_{THC[NMC-FID]cor}$ = concentration of THC, initial THC contamination (optional) and dry-to-wet corrected, as measured by the NMC FID during sampling through the NMC.

$RF_{CH4[THC-FID]}$ = response factor of THC FID to CH_4, according to § 1065.360(d).

$RFPF_{C2H6[NMC-FID]}$ = NMC combined C_2H_6 response factor and penetration fraction, according to § 1065.365(d).

$RFPF_{CH4[NMC-FID]}$ = NMC combined CH_4 response factor and penetration fraction, according to § 1065.365(d).

Example:

$$x_{THC[THC-FID]cor} = 150.3\ \mu mol/mol$$
$$x_{THC[NMC-FID]cor} = 20.5\ \mu mol/mol$$
$$RFPF_{C2H6[NMC-FID]} = 0.019$$
$$RFPF_{CH4[NMC-FID]} = 1.000$$
$$RF_{CH4[THC-FID]} = 1.05$$
$$x_{NMHC} = \frac{150.3 - 20.5 \cdot 1.05}{1 - 0.019 \cdot 1.05}$$
$$x_{NMHC} = 131.4\ \mu mol/mol$$

(ii) Use the following equation for penetration fractions determined using an NMC configuration as outlined in § 1065.365(e):

$$x_{NMHC} = \frac{x_{THC[THC-FID]cor} \cdot PF_{CH4[NMC-FID]} - x_{THC[NMC-FID]cor}}{PF_{CH4[NMC-FID]} - PF_{C2H6[NMC-FID]}}$$

Eq. 1065.660-3

Where:

χ_{NMHC} = concentration of NMHC.

$\chi_{THC[THC-FID]cor}$ = concentration of THC, initial THC contamination and dry-to-wet corrected, as measured by the THC FID during sampling while bypassing the NMC.

$PF_{CH4[NMC-FID]}$ = NMC CH_4 penetration fraction, according to § 1065.365(e).

$\chi_{THC[NMC-FID]cor}$ = concentration of THC, initial THC contamination (optional) and dry-to-wet corrected, as measured by the THC FID during sampling through the NMC.

$PF_{C2H6[NMC-FID]}$ = NMC C_2H_6 penetration fraction, according to § 1065.365(e).

Example:

$$x_{THC[THC-FID]cor} = 150.3\ \mu mol/mol$$
$$PF_{CH4[NMC-FID]} = 0.990$$
$$x_{THC[NMC-FID]cor} = 20.5\ \mu mol/mol$$
$$PF_{C2H6[NMC-FID]} = 0.020$$
$$x_{NMHC} = \frac{150.3 \cdot 0.990 - 20.5}{0.990 - 0.020}$$
$$x_{NMHC} = 132.3\ \mu mol/mol$$

(iii) Use the following equation for an NMC configured as described in § 1065.365(f)§ :

$$x_{NMHC} = \frac{x_{THC[THC-FID]cor} \cdot PF_{CH4[NMC-FID]} - x_{THC[NMC-FID]cor} \cdot RF_{CH4[THC-FID]}}{PF_{CH4[NMC-FID]} - RFPF_{C2H6[NMC-FID]} \cdot RF_{CH4[THC-FID]}}$$

Eq. 1065.660-4

Where:

χ_{NMHC} = concentration of NMHC.

$\chi_{THC[THC-FID]cor}$ = concentration of THC, initial THC contamination and dry-to-wet corrected, as measured by the THC FID during sampling while bypassing the NMC.

$PF_{CH4[NMC-FID]}$ = NMC CH_4 penetration fraction, according to § 1065.365(f).

$\chi_{THC[NMC-FID]cor}$ = concentration of THC, initial THC contamination (optional) and dry-to-wet corrected, as measured by the THC FID during sampling through the NMC.

$RFPF_{C2H6[NMC–FID]}$ = NMC combined C_2H_6 response factor and penetration fraction, according to § 1065.365(f).

$RF_{CH4[THC–FID]}$ = response factor of THC FID to CH_4, according to § 1065.360(d).

Example:

$$x_{THC[THC\text{-}FID]cor} = 150.3\ \mu mol/mol$$
$$PF_{CH4[NMC\text{-}FID]} = 0.990$$
$$x_{THC[NMC\text{-}FID]cor} = 20.5\ \mu mol/mol$$
$$RFPF_{C2H6[NMC\text{-}FID]} = 0.019$$
$$RF_{CH4[THC\text{-}FID]} = 0.980$$
$$x_{NMHC} = \frac{150.3 \cdot 0.990 - 20.5 \cdot 0.980}{0.990 - 0.019 \cdot 0.980}$$
$$x_{NMHC} = 132.5\ \mu mol/mol$$

(3) For a GC–FID or FTIR, calculate xNMHC using the THC analyzer's CH_4 response factor, $RF_{CH4[THC–FID]}$, from § 1065.360, and the initial THC contamination and dry-to-wet corrected THC concentration, $\chi_{THC[THC–FID]cor}$, as determined in paragraph (a) of this section as follows:

* * * * *

(c) * * *

(1) * * *

(ii) If the content of your fuel test contains at least 0.010 mol/mol of C_2H_6, you may omit the calculation of NMNEHC concentration and calculate the mass of NMNEHC as described in § 1065.650(c)(6)(ii).

(2) For a GC–FID, NMC FID, or FTIR, calculate χ_{NMNEHC} using the THC analyzer's CH_4 response factor, $RF_{CH4[THC–FID]}$, and C_2H_6 response factor, $RF_{C2H6[THC–FID]}$, from § 1065.360, the initial contamination and dry-to-wet corrected THC concentration, $\chi_{THC[THC–FID]cor}$, as determined in paragraph (a) of this section, the dry-to-wet corrected CH_4 concentration, χ_{CH4}, as determined in paragraph (d) of this section, and the dry-to-wet corrected C_2H_6 concentration, χ_{C2H6}, as determined in paragraph (e) of this section as follows:

* * * * *

(d) *CH_4 determination.* Use one of the following methods to determine methane (CH_4) concentration, χ_{CH4}:

(1) For a nonmethane cutter (NMC), calculate χ_{CH4} using the NMC's penetration fractions, response factors, and/or combined penetration fractions and response factors as described in § 1065.365, the THC FID's CH_4 response factor, $RF_{CH4[THC–FID]}$, from § 1065.360, the initial THC contamination and dry-to-wet corrected THC concentration, $\chi_{THC[THC–FID]cor}$, as determined in paragraph (a) of this section, and the dry-to-wet corrected CH_4 concentration, $\chi_{THC[NMC–FID]cor}$, optionally corrected for initial THC contamination as determined in paragraph (a) of this section.

(i) Use the following equation for an NMC configured as described in § 1065.365(d):

$$x_{CH4} = \frac{x_{THC[NMC\text{-}FID]cor} - x_{THC[THC\text{-}FID]cor} \cdot RFPF_{C2H6[NMC\text{-}FID]}}{RFPF_{CH4[NMC\text{-}FID]} - RFPF_{C2H6[NMC\text{-}FID]} \cdot RF_{CH4[THC\text{-}FID]}}$$

Eq. 1065.660-9

Where:

χ_{CH4} = concentration of CH_4.

$\chi_{THC[NMC–FID]cor}$ = concentration of THC, initial THC contamination (optional) and dry-to-wet corrected, as measured by the NMC FID during sampling through the NMC.

$\chi_{THC[THC–FID]cor}$ = concentration of THC, initial THC contamination and dry-to-wet corrected, as measured by the THC FID during sampling while bypassing the NMC.

$RFPF_{C2H6[NMC–FID]}$ = NMC combined C_2H_6 response factor and penetration fraction, according to § 1065.365(d).

$RF_{CH4[THC–FID]}$ = response factor of THC FID to CH_4, according to § 1065.360(d).

$RFPF_{CH4[NMC–FID]}$ = NMC combined CH_4 response factor and penetration fraction, according to § 1065.365(d).

Example:

$$x_{THC[NMC\text{-}FID]cor} = 10.4\ \mu mol/mol$$
$$x_{THC[THC\text{-}FID]cor} = 150.3\ \mu mol/mol$$
$$RFPF_{C2H6[NMC\text{-}FID]} = 0.019$$
$$RFPF_{CH4[NMC\text{-}FID]} = 1.000$$
$$RF_{CH4[THC\text{-}FID]} = 1.05$$
$$x_{CH4} = \frac{10.4 - 150.3 \cdot 0.019}{1 - 0.019 \cdot 1.05}$$
$$x_{CH4} = 7.69\ \mu mol/mol$$

(ii) Use the following equation for an NMC configured as described in § 1065.365(e):

$$x_{CH4} = \frac{x_{THC[NMC\text{-}FID]cor} - x_{THC[THC\text{-}FID]cor} \cdot PF_{C2H6[NMC\text{-}FID]}}{RF_{CH4[THC\text{-}FID]} \cdot \left(PF_{CH4[NMC\text{-}FID]} - PF_{C2H6[NMC\text{-}FID]}\right)}$$

Eq. 1065.660-10

Where:

χ_{CH4} = concentration of CH_4.

$\chi_{THC[NMC-FID]cor}$ = concentration of THC, initial THC contamination (optional) and dry-to-wet corrected, as measured by the NMC FID during sampling through the NMC.

$\chi_{THC[THC-FID]cor}$ = concentration of THC, initial THC contamination and dry-to-wet corrected, as measured by the THC FID during sampling while bypassing the NMC.

$PF_{C2H6[NMC-FID]}$ = NMC C_2H_6 penetration fraction, according to § 1065.365(e).

$RF_{CH4[THC-FID]}$ = response factor of THC FID to CH_4, according to § 1065.360(d).

$PF_{CH4[NMC-FID]}$ = NMC CH_4 penetration fraction, according to § 1065.365(e).

Example:

$$x_{THC[NMC\text{-}FID]cor} = 10.4\ \mu mol/mol$$
$$x_{THC[THC\text{-}FID]cor} = 150.3\ \mu mol/mol$$
$$PF_{C2H6[NMC\text{-}FID]} = 0.020$$
$$RF_{CH4[THC\text{-}FID]} = 1.05$$
$$PF_{CH4[NMC\text{-}FID]} = 0.990$$
$$x_{CH4} = \frac{10.4 - 150.3 \cdot 0.020}{1.05 \cdot (0.990 - 0.020)}$$
$$x_{CH4} = 7.25\ \mu mol/mol$$

(iii) Use the following equation for an NMC configured as described in § 1065.365(f):

$$x_{CH4} = \frac{x_{THC[NMC\text{-}FID]cor} - x_{THC[THC\text{-}FID]cor} \cdot RFPF_{C2H6[NMC\text{-}FID]}}{PF_{CH4[NMC\text{-}FID]} - RFPF_{C2H6[NMC\text{-}FID]} \cdot RF_{CH4[THC\text{-}FID]}}$$

Eq. 1065.660-11

Where:

χ_{CH4} = concentration of CH_4.

$\chi_{THC[NMC-FID]cor}$ = concentration of THC, initial THC contamination (optional) and dry-to-wet corrected, as measured by the NMC FID during sampling through the NMC.

$\chi_{THC[THC-FID]cor}$ = concentration of THC, initial THC contamination and dry-to-wet corrected, as measured by the THC FID during sampling while bypassing the NMC.

$RFPF_{C2H6[NMC-FID]}$ = the combined C_2H_6 response factor and penetration fraction of the NMC, according to § 1065.365(f).

$PF_{CH4[NMC-FID]}$ = NMC CH_4 penetration fraction, according to § 1065.365(f).

$RF_{CH4[THC-FID]}$ = response factor of THC FID to CH_4, according to § 1065.360(d).

Example:

$$x_{THC[NMC\text{-}FID]cor} = 10.4\ \mu mol/mol$$
$$x_{THC[THC\text{-}FID]cor} = 150.3\ \mu mol/mol$$
$$RFPF_{C2H6[NMC\text{-}FID]} = 0.019$$
$$PF_{CH4[NMC\text{-}FID]} = 0.990$$
$$RF_{CH4[THC\text{-}FID]} = 1.05$$
$$x_{CH4} = \frac{10.4 - 150.3 \cdot 0.019}{0.990 - 0.019 \cdot 1.05}$$
$$x_{CH4} = 7.78\ \mu mol/mol$$

(2) For a GC–FID or FTIR, χ_{CH4} is the actual dry-to-wet corrected CH_4 concentration as measured by the analyzer.

(e) *C_2H_6 determination.* For a GC–FID or FTIR, χ_{C2H6} is the C_1-equivalent, dry-to-wet corrected C_2H_6 concentration as measured by the analyzer.

■ 125. Amend § 1065.670 by revising paragraphs (a) introductory text and (b) introductory text to read as follows:

§ 1065.670 NO_X intake-air humidity and temperature corrections.

* * * * *

(a) For compression-ignition engines operating on carbon-containing fuels and lean-burn combustion engines operating on fuels other than carbon-containing fuels, correct for intake-air humidity using the following equation:

* * * * *

(b) For spark-ignition engines operating on carbon-containing fuels and stoichiometric combustion engines operating on fuels other than carbon-

containing fuels, correct for intake-air humidity using the following equation:

* * * * *

■ 126. Amend § 1065.750 by revising paragraph (a)(1)(ii) and adding paragraph (a)(6) to read as follows:

§ 1065.750 Analytical gases.

* * * * *

(a) * * *

(1) * * *

(ii) Contamination as specified in the following table:

TABLE 1 OF § 1065.750—GENERAL SPECIFICATIONS FOR PURIFIED GASES [a]

Constituent	Purified air	Purified N_2
THC (C_1-equivalent)	≤0.05 µmol/mol	≤0.05 µmol/mol
CO	≤1 µmol/mol	≤1 µmol/mol
CO_2	≤10 µmol/mol	≤10 µmol/mol
O_2	0.205 to 0.215 mol/mol	≤2 µmol/mol
NO_X	≤0.02 µmol/mol	≤0.02 µmol/mol
N_2O [b]	≤0.02 µmol/mol	≤0.02 µmol/mol
H_2 [c]	≤1 µmol/mol	≤1 µmol/mol
NH_3 [d]	≤1 µmol/mol	≤1 µmol/mol
H_2O [e]	≤5 µmol/mol	≤5 µmol/mol

[a] We do not require these levels of purity to be NIST-traceable.
[b] The N_2O limit applies only if the standard-setting part requires you to report N_2O or certify to an N_2O standard.
[c] The H_2 limit only applies for testing with H_2 fuel.
[d] The NH_3 limit only applies for testing with NH_3 fuel.
[e] The H_2O limit only applies for water measurement according to § 1065.257.

* * * * *

(6) If you measure H_2O using an FTIR analyzer, generate H_2O calibration gases with a humidity generator using one of the options in this paragraph (a)(6). Use good engineering judgment to prevent condensation in the transfer lines, fittings, or valves from the humidity generator to the FTIR analyzer. Design your system so the wall temperatures in the transfer lines, fittings, and valves from the point where the mole fraction of H_2O in the humidified calibration gas, χ_{H2Oref}, is measured to the analyzer are at a temperature of (110 to 202) °C. Calibrate the humidity generator upon initial installation, within 370 days before verifying the H_2O measurement of the FTIR, and after major maintenance. Use the uncertainties from the calibration of the humidity generator's measurements and follow NIST Technical Note 1297 (incorporated by reference, see § 1065.1010) to verify that the amount of H_2O in the calibration gas, χ_{H2Oref}, is determined within ±3% uncertainty, U_{xH2O}. If the humidity generator requires assembly before use, after assembly follow the instrument manufacturer's instructions to check for leaks. You may generate the H_2O calibration gas using one of the following options:

(i) Bubble gas that meets the requirements of paragraph (a)(1) of this section through distilled H_2O in a sealed vessel. Adjust the amount of H_2O in the calibration gas by changing the temperature of the H_2O in the sealed vessel. Determine absolute pressure, p_{abs}, and dewpoint, T_{dew}, of the humidified gas leaving the sealed vessel. Calculate the amount of H_2O in the calibration gas as described in § 1065.645(a) and (b). Calculate the uncertainty of the amount of H_2O in the calibration gas, U_{xH2O}, using the following equations:

$$\frac{\partial x_{\mathrm{H2O}}}{\partial T_{\mathrm{dew}}} = x_{\mathrm{H2O}} \cdot \left(\frac{6790.241 + 2.961487 \cdot 10^{4.76955 \cdot \left(1 - \frac{273.16}{T_{dew}}\right)}}{T_{\mathrm{dew}}^2} - \frac{5.028}{T_{\mathrm{dew}}} + 2.423229 \cdot 10^{-5} \cdot 10^{-8.2969 \cdot \left(\frac{T_{\mathrm{dew}}}{273.16} - 1\right)} \right)$$

Eq. 1065.750-1

$$\frac{\partial x_{\mathrm{H2O}}}{\partial p_{\mathrm{abs}}} = -1 \cdot \frac{x_{\mathrm{H2O}}}{p_{\mathrm{abs}}}$$

Eq. 1065.750-2

$$U_{x_{\mathrm{H2O}}} = \sqrt{\left(\frac{\partial x_{\mathrm{H2O}}}{\partial p_{\mathrm{abs}}} \cdot U_{\mathrm{p_{abs}}}\right)^2 + \left(\frac{\partial x_{\mathrm{H2O}}}{\partial T_{\mathrm{dew}}} \cdot U_{\mathrm{T_{dew}}}\right)^2}$$

Eq. 1065.750-3

Where:

T_{dew}= saturation temperature of water at measured conditions.
$U_{T_{dew}}$ = expanded uncertainty (k = 2) of the measured saturation temperature of water at measured conditions.
p_{abs} = wet static absolute pressure at the location of the dewpoint measurement.
$U_{p_{abs}}$ = expanded uncertainty (k = 2) of the wet static absolute pressure at the location of the dewpoint measurement.
$\frac{\partial x_{H2O}}{\partial T_{dew}}$ = partial derivative of x_{H2O} with respect to T_{dew}.
$\frac{\partial x_{H2O}}{\partial p_{abs}}$ = partial derivative of x_{H2O} with respect to p_{abs}.
x_{H2O} = amount of water in the calibration gas.
$U_{x_{H2O}}$ = expanded uncertainty (k = 2) of the amount of H_2O in the calibration gas.

Example:

T_{dew} = 39.5 °C = 312.65 K
$U_{T_{dew}}$ = 0.390292 K
p_{abs} = 99.980 kPa
$U_{p_{abs}}$ = 1.15340 kPa

Using Eq. 1065.645-1,
x_{H2O} = 0.0718436 mol/mol

$$\frac{\partial x_{H2O}}{\partial T_{dew}} = 0.0718436 \cdot \left(\frac{6790.241 + 2.961487 \cdot 10^{4.76955 \cdot \left(1 - \frac{273.16}{312.65}\right)}}{312.65^2} - \frac{5.028}{312.65} + 2.423229 \cdot 10^{-5} \cdot 10^{-8.2969 \cdot \left(\frac{312.65}{273.16} - 1\right)} \right)$$

$$\frac{\partial x_{H2O}}{\partial T_{dew}} = 0.00384409\ (mol/mol)/K$$

$$\frac{\partial x_{H2O}}{\partial p_{abs}} = -1 \cdot \frac{0.0718436}{99.980}$$

$$\frac{\partial x_{H2O}}{\partial p_{abs}} = -0.000718580\ (mol/mol)/kPa$$

$$U_{x_{H2O}} = \sqrt{(-0.000718580 \cdot 1.15340)^2 + (0.00384409 \cdot 0.390292)^2}$$

$U_{x_{H2O}}$ = 0.00171402 mol/mol

(ii) Use a device that introduces a measured flow of distilled H_2O as vapor into a measured flow of gas that meets the requirements of paragraph (a)(1) of this section. Determine the molar flows of gas and H_2O that are mixed to generate the calibration gas.

(A) Calculate the amount of H_2O in the calibration gas as follows:

$$x_{H2O} = \frac{\dot{n}_{H2O}}{\dot{n}_{gas} + \dot{n}_{H2O}}$$

Eq. 1065.750-4

(B) Calculate the uncertainty of the amount of H_2O in the generated calibration gas, U_{xH2O}, using the following equations:

$$\frac{\partial x_{H2O}}{\partial \dot{n}_{gas}} = -1 \cdot \frac{\dot{n}_{H2O}}{\left(\dot{n}_{gas} + \dot{n}_{H2O}\right)^2}$$

Eq. 1065.750-5

$$\frac{\partial x_{H2O}}{\partial \dot{n}_{H2O}} = \frac{\dot{n}_{gas}}{\left(\dot{n}_{gas} + \dot{n}_{H2O}\right)^2}$$

Eq. 1065.750-6

$$U_{x_{H2O}} = \sqrt{\left(\frac{\partial x_{H2O}}{\partial \dot{n}_{gas}} \cdot U_{\dot{n}_{gas}}\right)^2 + \left(\frac{\partial x_{H2O}}{\partial \dot{n}_{H2O}} \cdot U_{\dot{n}_{H2O}}\right)^2}$$

Eq. 1065.750-7

Where:

$\dot{n}_{gas}$ = molar flow of gas entering the humidity generator.
$U_{\dot{n}_{gas}}$ = expanded uncertainty (k=2) of the molar flow of gas entering the humidity generator.
$\dot{n}_{H2O}$ = molar flow of H_2O entering the humidity generator, mol/s.
$U_{\dot{n}_{H2O}}$ = expanded uncertainty (k=2) of the molar flow of H2O entering the humidity generator.
$\frac{\partial x_{H2O}}{\partial \dot{n}_{gas}}$ = partial derivative of x_{H2O} with respect to $\dot{n}_{gas}$.
$\frac{\partial x_{H2O}}{\partial \dot{n}_{H2O}}$ = partial derivative of x_{H2O} with respect to $\dot{n}_{H2O}$.
x_{H2O} = amount of H_2O in the calibration gas.
$U_{x_{H2O}}$ = expanded uncertainty (k=2) of the amount of H_2O in the generated calibration gas.

(C) The following example is a solution for U_{xH2O} using the equations in paragraph (c)(6)(B) of this section:

$$\dot{n}_{H2O} = 0.00138771 \text{ mol/s}$$
$$U_{\dot{n}_{gas}} = 0.000226137 \text{ mol/s}$$
$$\dot{n}_{gas} = 0.0148680 \text{ mol/s}$$
$$U_{\dot{n}_{H2O}} = 0.0000207436 \text{ mol/s}$$
$$x_{H2O} = \frac{0.00138771}{0.0148680 + 0.00138771}$$
$$x_{H2O} = 0.0853676 \text{ mol/mol}$$
$$\frac{\partial x_{H2O}}{\partial \dot{n}_{gas}} = -1 \cdot \frac{0.00138771}{(0.0148680 + 0.00138771)^2}$$

$$\frac{\partial x_{H2O}}{\partial \dot{n}_{gas}} = -5.25155\ (mol/mol)/(mol/s)$$
$$\frac{\partial x_{H2O}}{\partial \dot{n}_{H2O}} = \frac{0.0148680}{(0.0148680 + 0.00138771)^2}$$
$$\frac{\partial x_{H2O}}{\partial \dot{n}_{H2O}} = 56.2653\ (mol/mol)/(mol/s)$$
$$U_{x_{H2O}} = \sqrt{(-5.25155 \cdot 0.000226137)^2 + (56.2653 \cdot 0.0000207436)^2}$$
$$U_{x_{H2O}} = 0.00166510 \text{ mol/mol}$$

* * * * *

■ 127. Amend § 1065.1001 by:

■ a. Adding definitions of ''Carbon-containing fuel'', ''Lean-burn engine'', and ''Neat'' in alphabetical order; and

■ b. Revising the definition for ''Rechargeable Energy Storage System (RESS)''.

The additions and revisions read as follows:

§ 1065.1001 Definitions.

* * * * *

Carbon-containing fuel means an engine fuel that is characterized by compounds containing carbon. For example, gasoline, diesel, alcohol, liquefied petroleum gas, and natural gas are carbon-containing fuels.

* * * * *

Lean-burn engine means an engine with a nominal air fuel ratio substantially leaner than stoichiometric. For example, diesel-fueled engines are typically lean-burn engines, and gasoline-fueled engines are lean-burn engines if they have an air-to-fuel mass ratio above 14.7:1.

* * * * *

Neat means fuel that is free from mixture or dilution with other fuels. For example, hydrogen or natural gas fuel used without diesel pilot fuel are neat.

* * * * *

Rechargeable Energy Storage System (RESS) means engine or equipment components that store recovered energy for later use to propel the vehicle or accomplish a different primary function. Examples of RESS include the battery system or a hydraulic accumulator in a hybrid vehicle.

* * * * *

■ 128. Amend § 1065.1005 by revising the entry for M_{NMNEHC} in Table 7 of paragraph (f)(2) to read as follows:

§ 1065.1005 Symbols, abbreviations, acronyms, and units of measure.

* * * * *

(f) * * *

(2) * * *

TABLE 7 OF § 1065.1005—MOLAR MASSES

Symbol	Quantity	g/mol (10^{-3}·kg·mol^{-1})
*	*	*
M_{NMNEHC}	effective C_1 molar mass of nonmethane nonethane hydrocarbon[b]	13.875389
*	*	*

* * * * *

■ 129. Amend § 1065.1010 by revising paragraphs (a)(40) and (e)(2) to read as follows:

§ 1065.1010 Incorporation by reference.

* * * * *

(a) * * *

(40) ASTM D6348–12ε[1], Standard Test Method for Determination of Gaseous Compounds by Extractive Direct Interface Fourier Transform Infrared (FTIR) Spectroscopy, approved February 1, 2012 (''ASTM D6348''), IBR approved for §§ 1065.257(a), 1065.266(b), 1065.275(b), and 1065.277(b).

* * * * *

(e) * * *

(2) NIST Technical Note 1297, 1994 Edition, Guidelines for Evaluating and Expressing the Uncertainty of NIST Measurement Results, IBR approved for

§§ 1065.365(g), 1065.750(a), and 1065.1001.

PART 1074—PREEMPTION OF STATE STANDARDS AND PROCEDURES FOR WAIVER OF FEDERAL PREEMPTION FOR NONROAD ENGINES AND NONROAD VEHICLES

■ 130. The authority citation for part 1074 continues to read as follows:

Authority: 42 U.S.C. 7401–7671q.

■ 131. Amend § 1074.10 by revising paragraph (b) and adding paragraph (c) to read as follows:

§ 1074.10 Scope of preemption.

* * * * *

(b) States and localities are preempted from adopting or enforcing standards or other requirements relating to the control of emissions from new locomotives and new engines used in locomotives.

(c) For nonroad engines or vehicles other than those described in paragraph (a) and (b) of this section, States and localities are preempted from enforcing any standards or other requirements relating to control of emissions from nonroad engines or vehicles except as provided in subpart B of this part.

§ 1074.12 [Removed]

■ 132. Remove § 1074.12.

■ 133. Amend § 1074.101 by revising paragraph (a) to read as follows:

§ 1074.101 Procedures for California nonroad authorization requests.

(a) California must request authorization from the Administrator to enforce its adopted standards and other requirements relating to control of emissions from nonroad engines or vehicles that are not preempted by § 1074.10(a) or (b). The request must include the record on which the state rulemaking was based.

* * * * *

[FR Doc. 2023–07955 Filed 4–24–23; 8:45 am]

BILLING CODE 6560–50–P

FEDERAL REGISTER

Vol. 88 Thursday,

No. 81 April 27, 2023

Part IV

Small Business Administration

13 CFR Parts 121, 124, 125, et al.

Ownership and Control and Contractual Assistance Requirements for the 8(a) Business Development Program; Final Rule

SMALL BUSINESS ADMINISTRATION

13 CFR Parts 121, 124, 125, 126, 127, and 128

RIN 3245–AH70

Ownership and Control and Contractual Assistance Requirements for the 8(a) Business Development Program

AGENCY: U.S. Small Business Administration.

ACTION: Final rule.

SUMMARY: This final rule makes several changes to the ownership and control requirements for the 8(a) Business Development (BD) program, including recognizing a process for allowing a change of ownership for a former Participant that is still performing one or more 8(a) contracts and permitting an individual to own an applicant or Participant where the individual can demonstrate that financial obligations have been settled and discharged by the Federal Government. The rule also makes several changes relating to 8(a) contracts, including clarifying that a contracting officer cannot limit an 8(a) competition to Participants having more than one certification and clarifying the rules pertaining to issuing sole source 8(a) orders under an 8(a) multiple award contract. The rule also makes several other revisions to incorporate changes to SBA's other government contracting programs, including changes to implement a statutory amendment from the National Defense Authorization Act for Fiscal Year 2022, to include blanket purchase agreements in the list of contracting vehicles that are covered by the definitions of consolidation and bundling, and to more clearly specify the requirements relating to waivers of the nonmanufacturer rule.

DATES: This rule is effective on May 30, 2023. It applies to all solicitations issued on or after that date.

FOR FURTHER INFORMATION CONTACT: Mark Hagedorn, U.S. Small Business Administration, Office of General Counsel, 409 Third Street SW, Washington, DC 20416; (202) 205–7625; *mark.hagedorn@sba.gov.*

SUPPLEMENTARY INFORMATION: On September 9, 2022, SBA published in the **Federal Register** a comprehensive proposal that primarily proposed changes to the 8(a) Business Development (BD) program, but also proposed changes to SBA's size regulations and SBA's other small business contracting programs. 87 FR 55642. Specifically, the rule proposed to make several changes to the ownership and control requirements for the 8(a) BD program, including recognizing a process for allowing a change of ownership for a former Participant that is still performing one or more 8(a) contracts and permitting an individual to own an applicant or Participant where the individual can demonstrate that financial obligations have been settled and discharged by the Federal Government, and to provisions relating to the award of 8(a) contracts, including clarifying that a contracting officer cannot limit an 8(a) competition to Participants having more than one certification and clarifying the rules pertaining to issuing sole source 8(a) orders under an 8(a) multiple award contract. The rule also proposed to make several other revisions to incorporate changes to SBA's other government contracting programs, including changes to implement a statutory amendment from the National Defense Authorization Act for Fiscal Year 2022, to include blanket purchase agreements in the list of contracting vehicles that are covered by the definitions of consolidation and bundling, and to more clearly specify the requirements relating to waivers of the nonmanufacturer rule. Contemporaneously, on August 26, 2022, SBA also published a Notice in the **Federal Register** announcing that SBA intended to conduct tribal consultations and listening sessions relating to a proposal to require a Community Benefits Plan laying out how a tribe, Alaska Native Corporation (ANC) or Native Hawaiian Organization (NHO) that owned and controlled one or more 8(a) BD Participants intended to give benefits back to the Native community as a result of its 8(a) BD participation. 87 FR 52602. SBA held consultations in Anchorage, AK on September 14, 2022, in Albuquerque, NM on September 20, 2022, in Oklahoma City, OK on September 22, 2022, and in Washington, DC on October 5, 2022. In addition, SBA held a listening session on this topic in Honolulu, HI on September 28, 2022. The tribal, ANC and NHO representatives overwhelmingly opposed SBA imposing any target that a certain percentage of an entity's 8(a) receipts should be distributed to benefit the affected Native community or that there should be any specific consequences if the benefit targets were not reached. They believed that any such requirement infringed on self-determination and tribal sovereignty, that the entity (tribe/ANC/NHO) is in the best position to determine how and when to best reinvest in the 8(a) Participant for long-term growth, and that the tribal members or ANC shareholders, and not SBA, are the ones who determine what type of benefits the tribe/ANC provides. SBA listened to the concerns voiced at the tribal consultations. In response to those concerns, at the October 5, 2022, consultation in Washington, DC, SBA announced that the SBA Administrator determined that this final rule would not change any current requirements relating to Native community benefits. As such, the proposed changes to § 124.604 regarding the imposition of a Community Benefits Plan are not included in this final rule. In addition, the questions raised in the proposed rule and the August 26, 2022, **Federal Register** Notice regarding benefit targets or consequences for failure to meet those targets are also not included in this final rule.

During the proposed rule's 60-day comment period, SBA timely received over 650 comments from 125 commenters, with a high percentage of commenters favoring the proposed changes. A substantial number of commenters applauded SBA's effort to clarify and address ambiguities contained in the current rules. For the most part, the comments supported the substantive changes proposed by SBA.

Section-By-Section Analysis

Section 121.103(h)

Section 121.103(h) sets forth the rules pertaining to affiliation through joint ventures. SBA proposed to make several changes to this section. SBA first proposed to take some of the language currently contained in the introductory paragraph and add it to a new § 121.103(h)(1) for ease of use. SBA believes that the current introductory paragraph is overly complex and separating some of the requirements into a separate subparagraph will be easier to understand and use. In adding a new § 121.103(h)(1), the proposed rule also made corresponding numbering and cross reference adjustments. SBA received no objections to these changes. As such, they are adopted as final in this rule.

SBA's regulations currently provide that a specific joint venture generally may not be awarded contracts beyond a two-year period, starting from the date of the award of the first contract, without the partners to the joint venture being deemed affiliated for the joint venture. The proposed rule added a sentence to the introductory text of § 121.103(h) to capture SBA's current policy that allows orders to be issued under previously awarded contracts

beyond the two-year period (since the restriction is on additional contracts, not continued performance on contracts already awarded). All comments that SBA received regarding this provision supported the clarification pertaining to orders. As such, the final rule adopts the clarification as proposed.

The proposed rule also sought to clarify SBA's distinct treatment of populated and unpopulated joint ventures. The current regulation provides that if a joint venture exists as a formal separate legal entity, it may not be populated with individuals intended to perform contracts awarded to the joint venture. The proposed rule clarified that this requirement was meant to apply only to contracts set aside or reserved for small business (*i.e.,* small business set-aside, 8(a), women-owned small business (WOSB), HUBZone, and service-disabled veteran owned small business (SDVOSB) contracts). The proposed rule clarified that a populated joint venture could be awarded a contract set aside or reserved for small business where each of the partners to the joint venture were similarly situated (*e.g.,* both partners to a joint venture seeking a HUBZone contract were certified HUBZone small business concerns). Any time the size of a populated joint venture is questioned, the proposed rule also clarified that SBA will aggregate the revenues or employees of all partners to the joint venture. Commenters supported the change to clarify that a populated joint venture could be awarded a contract set aside or reserved for small business where each of the partners to the joint venture were similarly situated. Although several commenters agreed with the language in the proposed rule aggregating the size of joint venture partners where a joint venture is populated, two commenters recommended that populated joint ventures should be permitted for set-aside contracts as long as each party to the joint venture individually qualifies as small under the size standard corresponding to the North American Classification System (NAICS) code assigned to the contract and has any socioeconomic designation that may be required for the contract (*i.e.,* is similarly situated). SBA disagrees. SBA has consistently stated its view that a joint venture is not an on-going business entity, but rather something that is formed for a limited purpose and duration. If two or more separate business entities seek to join together through another entity on a continuing, unlimited basis, SBA views that as a separate business concern with each partner affiliated with each other. Where two or more parties form a separate business entity (*e.g.,* a limited liability company or partnership) and populate that entity with employees intended to perform work on behalf of that entity, SBA similarly views that as an ongoing business entity and will aggregate the receipts/employees of the parties that formed the separate business entity in determining its size. SBA's joint venture regulations provide generally that as long as each partner to the joint venture individually qualifies as small under the NAICS code assigned to the contract, the joint venture will qualify as small. However, that rule assumes that each partner to the joint venture individually performs work under a contract won by the joint venture with its own separate employees. That is not the case where two or more parties form a separate legal entity, populate that entity with employees, and intend to perform contracts with the employees hired by that separate entity. As such, the final rule adopts the language contained in the proposed rule that where two parties form a populated joint venture, the joint venture will qualify as small only where the parties to the joint venture meet the applicable size standard in the aggregate.

In addition, the proposed rule revised the ostensible subcontractor rule in redesignated § 121.103(h)(3) in two ways. First, it clarified how the ostensible subcontractor rule should apply to general construction contracts. Second, it proposed to add factors to consider in determining whether a specific subcontractor should be considered an ostensible subcontractor to comport with recent decisions of SBA's Office of Hearings and Appeals (OHA).

The proposed rule clarified that the primary role of a prime contractor in a general construction project is to oversee and superintend, manage, and schedule the work, including coordinating the work of various subcontractors. Those are the functions that are the primary and vital requirements of a general construction contract and ones that a prime contractor must perform. Although the prime contractor for a general construction contract must meet the limitation on subcontracting requirement set forth in § 125.6(a)(3), SBA recognizes that subcontractors often perform the majority of the actual construction work because the prime contractor frequently must engage multiple subcontractors specializing in a variety of trades and disciplines. As such, SBA believes that the ostensible subcontractor rule for general construction contracts should be applied to the management and oversight of the project, not to the actual construction or specialty trade construction work performed. The prime contractor must retain management of the contract but may delegate a large portion of the actual construction work to its subcontractors. SBA received 17 comments regarding the proposed clarification to the ostensible subcontractor rule for general construction contracts. All 17 comments supported the clarification. A few commenters suggested adding the word ''supervise'' and to specifically identify that one of the primary functions of a general construction prime contractor is to coordinate the work of subcontractors. Although SBA does not see a real distinction between oversight and supervision, the final rule nevertheless adds supervision as a primary and vital requirement as well as adding the coordination of subcontractor work. One commenter recommended adding more specificity as to what managing the contract entails. SBA believes that a general requirement to supervise, oversee, manage, and schedule the work on a contract, including coordinating the work of various subcontractors, is sufficient. SBA is concerned that adding any specificity beyond that or highlighting one or two specific items of managing a contract might be read as SBA believing those one or two items are more important in the analysis than any others. That is not SBA's intent, and SBA believes that an SBA Size Specialist should have discretion to analyze all the facts in determining whether an arrangement rises to the level of an ostensible subcontractor.

One commenter noted that the proposed rule also amended § 126.401(d) to provide that SBA will find that a prime HUBZone contractor is performing the primary and vital requirements of the contract or order and is not unduly reliant on one or more subcontractors that are not HUBZone-certified, where the prime contractor can demonstrate that it, together with any subcontractors that are certified HUBZone small business concerns, will meet the limitations on subcontracting provisions. The commenter sought clarification of that provision in light of the proposed language relating to general construction contractors. Specifically, the commenter believed the two provisions might conflict because a general contractor could perform 15 percent of a construction contract but still be unduly reliant on a

large business for the supervision and oversight of the contract. SBA agrees. For a services, specialty trade construction, or supply contract or order, SBA believes that meeting the applicable limitation on subcontracting requirement is sufficient to overcome any claim of the existence of an ostensible subcontractor. However, as the commenter noted, for a general construction contract a prime contractor could conceivably perform 15 percent of the contract but subcontract out all the supervision and oversight responsibilities to another business entity. If that business entity is not a similarly situated entity, that subcontracting could render the prime contractor ineligible due to the ostensible subcontractor rule. The final rule amends § 121.103(h)(3) to clarify the distinction between meeting the limitation on subcontracting for contracts or orders for services, specialty trade construction or supplies and those for general construction. To ensure consistency between the various programs, the final rule also makes similar changes to § 126.601(d) for the HUBZone program, to § 127.504(g) for the WOSB program, and to § 128.401(g) for the SDVO program.

SBA further proposed to revise the ostensible subcontractor rule in light of the decision of SBA's Office of Hearings and Appeals (OHA) in *Size Appeal of DoverStaffing, Inc.,* SBA No. SIZ–5300 (2011). In that decision, OHA created a four-factor test to indicate when a prime contractor's relationship with a subcontractor is suggestive of unusual reliance under the ostensible subcontractor rule. The four factors are (1) the proposed subcontractor is the incumbent contractor and ineligible to compete for the procurement, (2) the prime contractor plans to hire the large majority of its workforce from the subcontractor, (3) the prime contractor's proposed management previously served with the subcontractor on the incumbent contract, and (4) the prime contractor lacks relevant experience and must rely upon its more experienced subcontractor to win the contract. Under OHA's decisions, when these factors are present, violation of the ostensible subcontractor rule is more likely to be found if the subcontractor will perform 40% or more of the contract. SBA proposed to add two of these four factors to the ostensible subcontractor rule: the reliance on incumbent management and the reliance on the subcontractor's experience. SBA did not include plans to hire a large majority of its intended workforce on a contract from the incumbent contractor as a factor because a successful concern is often required to offer to qualified employees of a predecessor contract the right of first refusal on a subsequent contract, and must hire such individuals if they so opt. Because of this and other practical reasons, it is common for the same individuals to work for multiple different business concerns over time while performing the same function on follow-on contracts.

SBA received comments on both sides of this issue, with seven commenters agreeing with including the identified *Doverstaffing* factors and nine commenters opposing their inclusion. Those opposing the inclusion of these factors into the regulations highlighted that leveraging the experience of a subcontractor is a tool needed to assist a small business gain experience necessary to compete and win work. They believed that reliance on a subcontractor's experience alone should never result in a finding of an ostensible subcontractor. One commenter argued that as long as the new prime contractor is meeting the limitation on subcontracting requirement, SBA should not care who the subcontractor is. Another commenter believed that it should not matter whether a subcontractor previously performed the requirement or was the incumbent contractor, and that all that should be looked at is determining whether a subcontractor is performing primary and vital requirements of the contract. One commenter similarly argued that whether the prime contractor's proposed management previously served with the subcontractor on the incumbent contract is also irrelevant. The commenter believed that as long as those individuals are now employed by and under the control of the prime contractor, that should not negatively affect whether the subcontractor is an ostensible subcontractor. Even three of the commenters who favored adding the two identified factors to regulatory text believed that identifying factors to consider was appropriate as long as SBA did not apply any mechanically. SBA agrees that the ultimate determination in every case depends upon who is performing the primary and vital requirements of a contract or order and whether a prime contractor is unusually reliant on a subcontractor. SBA also agrees that no factor is determinative and that a prime contractor should be able to use the experience and past performance of its subcontractors to strengthen its offer, even where a subcontractor is the incumbent contractor. As with the existing rule, SBA intends to consider all aspects of the prime contractor's relationship with the subcontractor and would not limit its inquiry to any enumerated factors. SBA continues to believe that the SBA Area Offices should be given discretion to consider and weigh all factors in rendering a formal size determination, and that unique circumstances could lead to a result that does not fully align with the *DoverStaffing* analysis. That being said, SBA believes that identifying factors that can be considered is helpful to contractors. As such, the final rule retains factors that SBA may consider but adds a provision identifying that no single factor is determinative. The final rules also specifically clarifies that a prime contractor may use the experience and past performance of a subcontractor to enhance or strengthen its offer, including that of an incumbent contractor. It also reenforces that it is only where that subcontractor will perform primary and vital requirements of a contract or order, or where the prime contractor is unusually reliant on the subcontractor, that SBA will find the subcontractor to be an ostensible subcontractor.

One commenter requested that SBA clarify that the ostensible subcontractor rule does not apply to similarly-situated entities. SBA believes that is unnecessary as the current rule already specifies that an ''ostensible subcontractor is a subcontractor that is not a similarly situated entity'' and that language has been retained in this final rule.

One commenter also questioned whether the ostensible subcontractor rule applied to contracts below the Simplified Acquisition Threshold (SAT). SBA notes that the limitations on subcontracting requirements do not apply to small business acquisitions with an estimated value between the micro-purchase threshold and the simplified acquisition threshold. *See* 13 CFR 121.406(c). That being the case, a small business can subcontract to any business for such contracts and it does not matter who is performing the primary and vital functions of the contract. Although SBA believes that can be inferred from the current regulatory language, the final rule adds clarifying language to § 121.406(c) to eliminate any confusion.

Finally, the proposed rule revised redesignated § 121.103(h)(4) to clarify how receipts are to be counted where a joint venture hires individuals to perform one or more specific contracts (*i.e.,* where the joint venture is populated). Although SBA requires joint ventures to be unpopulated for purposes of performing set-aside contracts in order to properly track work performed

and benefits derived by the lead small/8(a)/HUBZone/WOSB/SDVOSB entity to the joint venture, some joint ventures are nevertheless populated for other purposes. Generally, the appropriate share of a joint venture's revenues that a partner to the joint venture must include in its own revenues is the same percentage as the joint venture partner's share of the work performed by the joint venture. However, that general rule cannot apply to populated joint ventures. Where a joint venture is populated, each individual partner to the joint venture does not perform any percentage of the contract—the joint venture entity itself performs the work. As such, revenues cannot be divided according to the same percentage as work performed because to do so would give each partner $0 corresponding to the 0% of the work performed by the individual partner. In such a case, SBA believes that revenues must be divided according to the same percentage as the joint venture partner's percentage ownership share in the joint venture. The proposed rule specifically incorporated into redesignated § 121.103(h)(4) SBA's belief that revenues should be divided by ownership interest. Comments supported this clarification, and SBA adopts the proposed language in the final rule.

In connection with the comments relating to the proposed changes to § 121.103, SBA also received comments seeking clarification to the joint venture provisions in § 125.8. Specifically, several commenters recommended that SBA provide further guidance regarding what decisions non-managing partners to the joint venture can participate in. The regulations provide that the managing venturer must control all aspects of the day-to-day management and administration of the contractual performance of the joint venture, and that other partners to the joint venture may participate in all corporate governance activities and decisions of the joint venture as is commercially customary. One commenter recommended that SBA add language providing that a non-managing joint venture partner could participate in decisions that were customary for joint ventures outside of the small business Government contracting environment. SBA believes that is unnecessary as it does not add anything substantively different from the current regulatory language. Another commenter recommended that SBA specifically include in the regulation instances in which a non-managing joint venture partner's concurrence could be required and identified the ability of the joint venture to initiate litigation on behalf of the joint venture as such an instance. As previously noted, the managing joint venture partner must independently control all aspects of the day-to-day management and administration of the contractual performance of the joint venture. SBA believes that initiating contract litigation is outside the scope of the management of daily contractual performance and instead represents a decision that reasonably falls into the exception that allows other joint venture partners to participate in commercially customary decisions. A joint venture is a mutual agreement between joint venture partners to combine resources for a specific contract or contracts, and litigation is sometimes required to protect those resources. Litigation on behalf of the joint venture is a decision that carries significant risk for both partners and as a result, it is unreasonable and outside the bounds of customary commercial practices to limit that decision to only one partner. Similarly, SBA believes that requiring the concurrence of a non-managing joint venture partner in deciding what contract opportunities the joint venture should seek is also something that would be commercially customary. The partners to a joint venture have formed a joint venture in order to seek contract opportunities. Since the parties will be jointly and severally liable for any contracts awarded to the joint venture, it makes sense that all parties to the joint venture should have a say in what opportunities the joint venture pursues. The final rule adds language specifying that a non-managing venturer's approval may be required in determining what contract opportunities the joint venture should seek and in initiating litigation on behalf of the joint venture. That addition is not meant to be the only decisions in which a non-managing member may participate but is merely illustrative of corporate governance activities and decisions of the joint venture that SBA believes non-managing venturer participation is commercially customary.

Another commenter also sought clarification to a perceived inconsistency in the regulations between § 125.8(b)(2)(xii) and § 125.8(h)(2). Paragraph 125.8(b)(2)(xii) provides that a joint venture must submit a project-end performance-of-work report to SBA and the relevant contracting officer no later than 90 days after completion of the contract. Paragraph (h)(2) provides that at the completion of every contract set aside or reserved for small business that is awarded to a joint venture between a protégé small business and its SBA-approved mentor, and upon request by SBA or the relevant contracting officer, the small business partner to the joint venture must submit a report to the relevant contracting officer and to SBA. The commenter believed that § 125.8(b)(2)(xii) required a performance-of-work report at contract completion while § 125.8(h)(2) stated that such a report must be submitted only when requested by SBA or the contracting officer. The commenter misunderstood SBA's intent in § 125.8(h)(2). That provision meant to require the submission of a performance-of-work report in two instances: first, always at the completion of the contract; and second, whenever requested to do so by SBA or the contracting officer prior to completion of the contract. In order to eliminate any confusion, the final rule adds clarifying language to § 125.8(h)(2).

Section 121.103(i)

The proposed rule put back into the regulations a paragraph pertaining to affiliation based on franchise and license agreements. This provision was inadvertently deleted from § 121.103 when SBA deleted other provisions of § 121.103 in its October 2020 rulemaking. The proposed rule merely added back into the regulations the provision that was inadvertently removed. Several commenters supported adding this provision back into the regulations and no comments opposed. As such, SBA the final rule adopts adding this provision back into the regulations.

Section 121.404

SBA proposed to clarify § 121.404(a)(1)(iv), which provides that size is determined for a multiple award contract at the time of initial offer on the contract even if the initial offer might not include price. The proposed clarification intended to treat orders issued pursuant to a multiple award contract that did not itself include price similarly to orders under multiple award contracts generally. SBA believes there is no justification for treating orders issued on these contracts differently, simply because the contract did not require price with initial offer. Thus, size for set-aside orders will be determined in accordance with subparagraphs (a)(1)(i)(A), (a)(1)(i)(B), (a)(1)(ii)(A), or (a)(1)(ii)(B), as appropriate, which means that for orders issued under any set-aside contract, size will be determined at the time of offer for the multiple award contract and not at the time of each

individual order unless a contracting officer requests size recertification with respect to an individual order.

SBA received comments both supporting and opposing this clarification. Commenters generally agreed that orders for multiple award contracts should be treated similarly whether offers included price for the underlying multiple award contract itself. Several commenters, however, repeated previous concerns raised with SBA regarding the amendments to § 121.404 that were made in 2020. Section 121.404 states that where an order under an unrestricted multiple award contract is set-aside exclusively for small business (*i.e.,* small business, 8(a) small business, service-disabled veteran-owned small business, HUBZone small business, or women-owned small business), a concern must recertify its size status and qualify as a small business at the time it submits its initial offer, which includes price, for the particular order. Although the proposed rule did not seek to change that provision, several commenters voiced the view that that provision should not apply to previously awarded multiple award contracts.

A firm's status as a small business does not generally affect whether the firm does or does not qualify for the award of an unrestricted multiple award contract. As such, competitors are very unlikely to protest the size of a concern that self-certifies as small for an unrestricted multiple award contract. In SBA's view, when a contracting officer sets aside an order for small business under an unrestricted multiple award contract, the order is the first time that size status is important because competition is being limited under the contract. That is the first time that some firms will be eligible to compete for the order while others will be excluded from competition because of their size status. SBA never intended to allow a firm's self-certification for the underlying unrestricted multiple award contract to control whether a firm is small at the time of an order is set-aside for small business years after the multiple award contract was awarded. These few commenters believed that SBA attempted to retroactively change the rules pertaining to previously awarded unrestricted multiple award contracts. SBA disagrees. Small business set-aside orders under unrestricted vehicles are completely discretionary. When a contracting officer exercises this discretion, Federal Acquisition Regulation (FAR, Title 48 of the Code of Federal Regulations) Part 19 and SBA rules apply and change the eligibility requirements of the contract for that order. For example, the contractor must comply with the applicable limitations on subcontracting for that order (whereas the limitations on subcontracting do not generally apply to unrestricted contracts). When a procuring agency for the first time decides to set aside a specific order under an unrestricted multiple award contract for small business, the agency is making an exception to the fair opportunity regularly provided to all the contract holders to be considered for each order under the unrestricted contract. Thus, it follows that a business concern must qualify as small for an order set aside for small business under SBA's regulations in effect at the time of the order to ensure that the exception is applied appropriately at the order level because being a small business concern was not a requirement for any awardees under the unrestricted contract and verifying awardees' size status was not prerequisite to awarding the unrestricted contract. Moreover, the applicable size standard for any specific order set-aside for small business would be the one currently codified in SBA's regulations (not the one that was in effect at the time the underlying multiple award contract was awarded). All firms that self-certified as small for the underlying multiple award contract will continue to be considered to be small businesses for goaling purposes for all orders issued under the multiple award contract on an unrestricted basis.

SBA also proposed to clarify when size recertification is required in connection with a sale or acquisition. In 2016, SBA amended its regulation regarding recertification of size to add the word ''sale'' in addition to mergers and acquisitions as an instance when recertification is required. *See* 81 FR 34243, 34259 (May 31, 2016). Since that time, some have questioned whether recertification of size status may be required whenever any sale of stock occurs, even de minimis amounts. That was not SBA's intent. Recertification is required whenever there is a merger. However, recertification in connection with a ''sale'' or ''acquisition'' is required only where the sale or acquisition results in a change in control or negative control of the concern. Recertification is not required where small sales or acquisitions of stock that do not appear to affect the control of the selling or acquiring firm occur. The proposed rule added language to clarify SBA's current intent. The comments supported this clarification, and SBA adopts the proposed language in this final rule.

The proposed rule also clarified the recertification requirements set forth in § 121.404(g) for joint ventures. Specifically, the proposed rule added a new § 121.404(g)(6) which set forth the general rule that a joint venture can recertify its status as a small business where all parties to the joint venture qualify as small at the time of recertification, or the protégé small business in a still active mentor-protégé joint venture qualifies as small at the time of recertification. The proposed rule also clarified that the two-year limitation on contract awards to joint ventures set forth in § 121.103(h) does not apply to recertification. In other words, recertification is not a new contract award, and thus can occur even if its timing is more than two years after the joint venture received its first contract. Commenters supported both of those clarifications. As such, SBA adopts them as final.

Sections 121.404(a)(1)(i)(B), 121.404(a)(1)(ii)(B), 124.501(h), and 124.502(a)

Sections 121.404(a)(1)(i)(B) and 121.404(a)(1)(ii)(B) provide generally that a business concern that qualifies as small at the time of an offer for a multiple award contract that is set aside or reserved for the 8(a) BD program will be deemed a small business for each order issued against the contract, unless a contracting officer requests a size recertification for a specific order. However, for sole source 8(a) orders issued under a multiple award contract set-aside for exclusive competition among 8(a) Participants, § 124.503(i)(1)(iv) requires an agency to offer and SBA to accept the order into the 8(a) program on behalf of the identified 8(a) contract holder. As part of the offer and acceptance process, SBA must determine that a concern is currently an eligible Participant in the 8(a) BD program at the time of award. *See* § 124.501(h). The proposed rule clarified that because size is something SBA looks at in making an eligibility determination in accepting a sole source offering, a Participant must currently qualify as a small business for any sole source award in addition to currently being a Participant in the program (*i.e.,* firms that have graduated from or otherwise left the 8(a) BD program are not eligible for any 8(a) sole source award). The proposed rule amended §§ 121.404(a)(1)(i)(B), 121.404(a)(1)(ii)(B), 124.501(h), and 124.502(a) to clarify that position. Although a few commenters opposed this clarification, the majority of commenters supported it. It has always been SBA's interpretation of its statutory authority that a firm must be an eligible Participant on the date of any

8(a) sole source award. As noted, an eligibility determination includes size. As such, the final rule adopts the language proposed that a Participant must currently qualify as a small business for any sole source award.

Section 121.411(c)

The proposed rule corrected an inconsistency between § 121.411(c) and § 125.3(c)(1)(viii). In requiring a prime contractor to notify unsuccessful small business offerors of the apparent successful offeror on subcontracts, § 125.3(c)(1)(viii) provides that a prime contractor must provide pre-award written notification to unsuccessful small business offerors on all subcontracts over the simplified acquisition threshold, while § 121.411(c) requires a prime contractor to inform each unsuccessful subcontract offeror in connection with any competitive subcontract. The proposed rule added the over the simplified acquisition threshold condition to § 121.411(c) and adjusted the language in § 125.3(c)(1)(viii) to make the two provisions consistent. SBA received three comments regarding this provision. All three supported SBA's proposal to resolve the inconsistency in the regulations. As such, SBA adopts the proposed language in this final rule.

Section 121.413

Section 121.413 is currently a Reserved section, with no text. This final rule merely removes § 121.413 entirely. Section 121.401 currently refers to the rules set forth §§ 121.401 through 121.413. With the elimination of § 121.413, the final rule also amends this reference to instead refer to the rules set forth in §§ 121.401 through 121.412.

Sections 121.506 and 121.507

The Small Business Timber Set-Aside Program establishes small business set-aside sales of sawtimber from the federal forests managed by the U.S. Department of Agriculture's Forest Service and the U.S. Department of the Interior's Bureau of Land Management. Current regulations require that a small business concern cannot resell or exchange more than 30% of the sawtimber volume to ''other than small'' businesses. SBA regulations do not address situations where a small business concern is unable to meet the 30% requirement due to circumstances outside of its control such as natural disasters, national emergencies, or other extenuating circumstances.

As proposed, SBA added § 121.507(d) to allow the SBA's Director of Government Contracting (D/GC) to grant a waiver in limited circumstances when a small business is unable to meet the 30% requirement due to circumstances out of its control. SBA sought comments on the following: whether a waiver is needed; if it is needed, under what circumstances should a waiver be granted; whether SBA should allow partial waivers (*i.e.,* for some but not all of the 30/70 requirement); and how SBA should evaluate a waiver request.

SBA received ten comments on the proposed rule with five supporting the proposed amendment and five opposing it. Commenters in opposition focused on the importance of the 30/70 requirement to ensure access to timber for small businesses and expressed concern that the waiver could weaken the program. While generally in opposition to the waiver, two of the five comments suggested that if SBA were to finalize the proposed amendment, a waiver request must meet a set of strict criteria to ensure that all avenues for compliance have been exhausted. SBA recognizes that the 30/70 requirement is an integral part of the Small Business Timber Set-Aside Program and is committed to a full and fair implementation of the program. SBA does not intend to weaken the requirement with this amendment, it merely establishes the D/GC's authority to approve a waiver in limited circumstances when justified. Historically, SBA has granted few waivers and only in extremely rare circumstances. Due to that rarity, SBA has no internal procedure to process requests or established criteria to evaluate and approve waivers when needed. This amendment gives SBA the opportunity to set procedure and criteria for processing waiver requests in the future. SBA will continue to apply a strict standard and does not intend to grant a waiver in circumstances of inconvenience, changes in market value, ignorance of contract requirements, or unsupported claims of changed conditions. Accordingly, SBA implements the § 121.507(d) as proposed.

SBA also received comments that urged the agency to amend regulations to reflect the revised terms of the Memorandum of Understanding (MOU) signed by SBA and Forest Service (FS) in 2020. With the updated terms of the MOU, SBA and FS agreed to revise the computation of market share to include timber volume sold under Stewardship Integrated Resource Timber Contracts. To date, SBA has not amended its regulations to reflect the revised agreed upon computation of market share. The commenter recommended that SBA's regulations should be updated to merely include the policy included in the MOU agreed upon by SBA and FS to ensure that that policy is consistently applied and to avoid any confusion regarding the policy. SBA agrees and adopts this comment.

The MOU governs timber sales by FS under the Small Business Timber Set-Aside Program and establishes guidelines for determining ''fair proportion,'' sets a five-year re-computation period for determining the base average shares of timber purchases and establishes a ''trigger'' mechanism for initiating set-aside timber sales. In 2016, SBA proposed a change to regulations that included both Integrated Resource Timber Contracts and Integrated Services Timber Contracts in the small business market share calculation. (81 FR 66199). Although SBA received comments supporting the amendment, it did not become final due to ongoing negotiations with FS on the updated MOU. Ultimately, the MOU included only Integrated Resource Timber Contracts in the small business market share calculation. To reflect the 2020 update to the MOU, SBA amends its regulations at § 121.506 to add relevant definitions and adds § 121.507(e) to include Integrated Resource Timber Contracts in the small business market share calculation.

Section 121.702

Section 121.702 sets forth the size and eligibility standards that apply to the Small Business Innovation Research (SBIR) and Small Business Technology Transfer (STTR) programs. Paragraph (c)(7) provides guidance relating to the ostensible subcontractor rule in the SBIR/STTR programs. That rule treats a prime contractor and its subcontractor or subgrantee as joint venturers when a subcontractor or subgrantee performs primary and vital requirements of an SBIR or STTR funding agreement. The proposed rule clarified that when an SBIR/STTR offeror is determined to be a joint venturer with its ostensible subcontractor, all rules applicable to joint ventures apply. This means that SBA will apply § 121.702(a)(1)(iii) or § 121.702(b)(1)(ii), which contains the ownership and control requirements for SBIR/STTR joint ventures. This clarification is consistent with how SBA treats entities that are determined to be joint venturers with an ostensible subcontractor for other small business program set-asides. SBA received five comments in response to this clarification. All five supported the change. The commenters felt that if SBA determines that a subcontractor really is a joint venture partner because it is

performing primary and vital aspects of the requirement, it makes sense that all requirements that apply to joint ventures generally would apply to the relationship deemed in effect to be a joint venture. SBA adopts the proposed language in this final rule.

Section 121.702(c) relates to size and affiliation for the SBIR/STTR programs. Some of the exceptions to affiliation that are applicable to the SBIR/STTR programs are listed in § 121.702(c). However, others are listed in the general exceptions to size affiliation that are located in section 121.103(b). Currently, there is an exception to affiliation noted in § 121.103(b)(1) for business concerns owned in whole or substantial part by Small Business Investment Companies (SBICs) licensed under the Small Business Investment Act of 1958, as amended. Pursuant to § 121.103(b)(8), this exception applies to entities awarded SBIR or STTR contracts or grants that are wholly or substantially owned by SBICs. SBA received a comment recommending that SBA specifically clarify that the exception applies to the SBIR/STTR programs. In response, the final rule clarifies this longstanding exception to affiliation and its applicability to the SBIR/STTR programs by specifically referencing the exception at § 121.103(b)(1) in a new § 121.702(c)(11).

Section 121.1001

Section 121.1001 identifies who may initiate a size protest or request a formal size determination in any circumstances. Currently, the language identifying who may protest the size of an apparent successful offeror is not identical for all of SBA's programs. For small business set-aside contracts and competitive 8(a) contracts, any offeror that the contracting officer has not eliminated from consideration for any procurement-related reason may initiate a size protest. For contracts set aside for WOSBs or SDVOSBs, any concern that submits an offer may initiate a size protest. For contracts set aside for certified HUBZone small business concerns, any concern that submits an offer and has not been eliminated for reasons unrelated to size may submit a size protest. SBA believes that making the language for all programs identical will remove any confusion and provide more consistent implementation of the size protest procedures. The proposed rule adopted the language currently pertaining to small business set-asides and competitive 8(a) contracts to all of SBA's programs. Thus, any offeror that the contracting officer has not eliminated from consideration for any procurement-related reason could initiate a size protest in each of those programs. SBA received ten comments on this change. All commenters supported making the protest language for all SBA small business programs identical. As such the final rule make conforming changes in § 121.1001(a)(6)(i) for the HUBZone program, in § 121.1001(a)(8)(i) for the SDVO program, and in § 121.1001(a)(9)(i) for the WOSB program.

With respect to 8(a) contracts, § 121.1001(a)(2) identifies interested parties who may protest the size status of an apparent successful offeror for an 8(a) competitive contract, and § 121.1001(b)(2)(ii) identifies those who can request a formal size determination with respect to a sole source 8(a) contract award. Pursuant to § 124.501(g), before a Participant may be awarded either a sole source or competitive 8(a) contract, SBA must determine that the Participant is eligible for award. SBA will determine eligibility at the time of its acceptance of the underlying requirement into the 8(a) BD program for a sole source 8(a) contract, and after the apparent successful offeror is identified for a competitive 8(a) contract. For a sole source contract, if SBA determines a Participant to be ineligible because SBA believes the concern to be other than small, § 121.1001(b)(2)(ii) authorizes the Participant determined to be ineligible to request a formal size determination. However, § 121.1001(b)(2)(ii) does not currently authorize a Participant determined to be ineligible based on size to request a formal size determination in connection with a competitive 8(a) contract award. SBA does not believe that the protest authority of § 121.1001(a)(2) was meant to apply to this situation since protests normally relate to another firm challenging the small business status of the apparent successful offeror, not the apparent successful offeror challenging its own size status. The proposed rule provided specific authority to allow a firm determined to be ineligible for a competitive 8(a) award based on size to request a formal size determination. It also authorized the contracting officer, the SBA District Director in the district office that services the Participant, the Associate Administrator for Business Development, and the SBA's Associate General Counsel for Procurement Law to do so as well. SBA received four comments supporting this change. Without any opposing comments, SBA adopts the language as proposed.

Sections 121.1004(a)(ii), 126.801(d)(2)(i), and 127.603(c)(2)

In the context of a sealed bid procurement, SBA's regulations provide that an interested party must protest the size or socioeconomic status (*i.e.,* service-disabled veteran-owned small business (SDVOSB), HUBZone or women-owned small business (WOSB)/economically-disadvantaged women-owned small business (EDWOSB)) of the low bidder prior to the close of business on the fifth business day after bid opening. However, the regulations do not specifically take into account the situation where a low bidder is timely protested and found to be ineligible, the procuring agency identifies another low bidder, and an interested party seeks to challenge the size or socioeconomic status of the newly identified low bidder. In such a situation, the new low bidder is identified well beyond five days of bid opening. As such, it is impossible for an interested party to file a timely protest (*i.e.,* one within five days of bid opening). It was not SBA's intent to disallow size protests in these circumstances. SBA believes that a protest in these circumstances should be deemed timely if it is received within five days of notification of the new low bidder. The proposed rule specifically provided that where the identified low bidder is determined to be ineligible for award, a protest of any other identified low bidder would be deemed timely if received within five business days after the contracting officer has notified the protestor of the identity of that new low bidder. Eight commenters supported this change, noting that the change was needed in order to preserve protests rights when an initial low bidder ultimately does not receive the award. SBA adopts the proposed provision in this final rule.

The final rule makes this change in § 121.1004(a)(ii) for size protests, in § 126.801(d)(2)(i) for protests relating to HUBZone status, and in § 127.603(c)(2) for protests relating to WOSB or EDWOSB status. Although the proposed rule also amended § 125.28(d)(2) for protests relating to SDVO status, this final rule does not amend provisions relating to the timeliness of SDVO status protests because SBA included the same provision in the final rule implementing the Veteran Small Business Certification Program and is already contained in § 134.1004(a)(4) of SBA's regulations. *See* 87 FR 73400 (Nov. 29, 2022).

Section 121.1004

The proposed rule added § 121.1004(f) to specify that size protests may be filed only against an apparent

successful offeror (or offerors) or an offeror in line to receive an award. SBA will not consider size protests relating to offerors who are not in line for award. This is the current SBA policy, and the proposed rule merely provided additional clarity to § 121.1004(e), which specifies that premature protests will be dismissed. SBA received three comments, all supporting this clarification. The final rule adopts the proposed language.

Where an agency decides to reevaluate offers as a corrective action in response to a protest at the Government Accountability Office (GAO), the proposed rule added a new § 121.1004(g) providing that SBA would dismiss any size protest relating to the initial apparent successful offeror. When offerors are made aware of the new or same apparent successful offeror after reevaluation, the proposed rule authorized them to again have the opportunity to protest the size of the apparent successful offeror within five business days after such notification. One commenter agreed with proposed § 121.1004(g) as written, and one commenter agreed with the intent of the proposal but sought further clarification. That commenter first recommended that all protests under FAR subpart 33.1 should be treated similarly, meaning that the same consequences should result where there is an agency level protest, a protest at GAO or a case filed regarding the affected procurement at the Court of Federal Claims. SBA agrees and has made that clarification in the final rule both here and in § 121.1009. Additionally, the commenter recommended that the regulation allow a procuring agency to request that a size determination be completed, and for SBA in its discretion to process the size protest, despite corrective actions. It is SBA's policy that with respect to a specific contract, SBA will generally process size protests relating only to the apparent successful offeror. Where a corrective action could cause a procuring agency to change who it selects as the apparent successful offeror, SBA would not agree to continue to process a size protest relating to the initially identified apparent successful offeror. Nevertheless, if a procuring agency can demonstrate that the corrective action would not result in a change in the apparent successful offeror, SBA believes that it could continue to process the size protest. The final rule adds language providing that SBA will complete the size determination where the procuring agency makes a written request to SBA within two business days of the agency informing SBA of the corrective action and demonstrates that the corrective action will not result in a change of the apparent successful offeror. SBA will not, however, continue to process a size protest where the size protest involves size issues that are determined as of the date of final proposal revision per § 121.404(d).

Section 121.1009

Section 121.1009 details the procedures SBA's Government Contracting Area Offices use in making formal size determinations. Paragraph 121.1009(a)(1) provides that the Area Office will generally issue a formal size determination within 15 business days after receipt of a protest or a request for a formal size determination. As noted above, with respect to a specific contract, SBA will generally process size protests relating only to the apparent successful offeror. SBA sometimes receives a size protest where the award is simultaneously being protested at the GAO. Where this happens, SBA suspends processing the size protest pending the outcome of the GAO decision since that decision may require corrective action which could affect the apparent successful offeror. Although that has been SBA's policy in practice, it is not specifically set forth in SBA's regulations. The proposed rule incorporated that policy, providing that if a protest is pending before GAO, the SBA Area Office will suspend the size determination case. Once GAO issues a decision, the proposed rule noted that the Area Office will recommence the size determination process and issue a formal size determination within 15 business days of the GAO decision, if possible. Similar to the comment in response to proposed § 121.1004(g), one commenter believed that if SBA is going to suspend processing a size protest pending the outcome of a GAO protest, the same should be done for agency level protests and cases filed with the Court of Federal Claims relating to the affected procurement. The commenter also recommended that if the bid protest is not resolved within 40 days, the SBA Area Office should resume consideration of the size protest and issue a formal size determination within 15 business days thereafter, if possible. SBA disagrees with this recommendation. Again, SBA's policy is to process size protests only regarding firms that are in line for award (*i.e.,* for firms that have been selected as the apparent successful offerors). If the apparent successful offeror could change in light of the FAR subpart 33.1 protest, it does not make sense to SBA to recommence processing a size protest regarding the firm initially determined to be the apparent successful offeror, regardless of the amount of time that has passed since the FAR subpart 33.1 protest was filed. As such, the final rule amends the language to clarify that SBA will suspend processing a size protest whenever a FAR subpart 33.1 protest is filed regarding the same procurement, but does not adopt the recommendation that SBA restart processing the protest if a certain amount of time passes. If the FAR subpart 33.1 decision does not change the apparent successful offeror, SBA will generally issue a formal size determination within 15 business days of the decision. If the decision results in a cancellation of the award or a change of the apparent successful offeror, SBA will dismiss the protest as moot. If the award is cancelled and re-evaluation or other corrective action takes place, interested parties may file a timely size protest with respect to the newly identified apparent successful offeror after the notification of award. Where re-evaluation results in the selection of the same apparent successful offeror, a timely size protest may be filed with respect to that firm.

Sections 121.1009(g)(5), 126.503(a)(2), 127.405(d), and 128.500(d)

Section 863 of the National Defense Authorization Act for Fiscal Year 2022 (NDAA FY22), Public Law 117–81, amended section 5 of the Small Business Act, 15 U.S.C. 634, to add three requirements related to size and socioeconomic status determinations. First, section 863 mandates that a business concern or SBA, as applicable, ''shall'' update the concern's status in *SAM.gov* not later than two days after a final determination by SBA that the concern does not meet the size or socioeconomic status requirements that it certified to be. SBA believes that the statute intends that a business concern be required to update *SAM.gov* in all instances in which it is capable of doing so. Only where a business concern is unable to change a particular status (*e.g.,* only SBA can identify a concern as a certified HUBZone small business) will the business concern not be required to change that status in *SAM.gov*. Second, section 863 requires that, in the event that the business does not update its status within this timeframe, SBA ''shall'' make the update within two days of the business's failure to do so. Third, section 863 requires that, where the business is required to make an update, it also must notify the contracting officer for each contract with which the business has a pending bid or offer, if the business finds, in good faith, that

the determination affects the eligibility of the concern to be awarded the contract. The proposed rule implemented these provisions by amending SBA's regulations in § 121.1009(g)(5) (for size determinations), § 125.30(g)(4) (for SDVO status determinations), § 126.503(a)(2) (for HUBZone status determinations), and § 127.405(c) (for WOSB/EDWOSB status determinations). Because only SBA can change a firm's status as a certified HUBZone small business concern in *SAM.gov*, it is not ''applicable'' under the statute for the business concern to do so. As such, the proposed rule did not add language requiring a HUBZone concern to change its status in *SAM.gov* within two business days of an adverse status determination. Instead, it required SBA to make such a change within four business days. Several commenters supported the proposed regulatory changes in response to the statutory change. A few commenters also complained about difficulties they encountered trying to update *SAM.gov*, but those issues are not relevant to the statutory requirements or SBA's implementation of those requirements.

The final rule adopts the language proposed with a few modifications. Because SBA renumbered all SDVO provisions when implementing the Veteran Small Business Certification Program, this final rule implements the provisions relating to section 863 for SDVO status in a new § 128.500(d) instead of § 125.30(g)(4) as proposed. *See* 87 FR 73400 (Nov. 29, 2022). To take into account SBA's new authority to certify and decide protests relating to VOSB status, the final rule also includes VOSB status as something that needs to be changed in response to a final SBA determination finding a firm ineligible as a VOSB. Additionally, the final rule applies the two-day requirement on self-certifications to situations where SBA denies applicants' requests for VOSB or SDVOSB certification or for WOSB certification. Those changes are reflected in § 128.302(f) for VOSB/SDVOSB and in § 127.304(g) for WOSB. For WOSB, the two-day requirement applies where SBA's determination is based on the ownership or control of the applicant.

SBA's protest decisions are appealable to OHA, and VOSB/SDVOSB certification decisions also are appealable. If a participant or applicant has appealed SBA's determination, the two-day requirement does not apply until OHA issues a final decision finding the firm ineligible. If there is no appeal available, the two-day requirement applies immediately after the firm receives SBA's determination that the firm is ineligible. If an appeal is available but the firm ultimately chooses not to appeal the decision, the two-day requirement applies immediately after the right to appeal lapses.

One commenter sought clarification as to whether there are any consequences if a firm fails to change its status timely in *SAM.gov*. Specifically, the commenter questioned whether a failure to change status within two days would be a cause to initiate debarment or suspension proceedings. Under the provisions of section 863, the consequence of a firm failing to change its status is that SBA would have authority to change the status on behalf of the firm. SBA will work with the System for Award Management to exercise such authority, but SBA does not presently have the ability in *SAM.gov* to change a firm's certification status without the firm taking action to accept the change.

Section 863 also requires firms to alert agencies with which the firm has a pending offer when the firm receives a relevant negative status determination. Failure to do so in that instance could lead to protests or penalties. Initiating a debarment or suspension action depends on the facts. If the only thing a firm did was not change its status in *SAM.gov* within two days, SBA does not believe that would be sufficient cause for debarment or suspension. Failure to notify contracting officers on pending procurements of a firm's change in status could be if SBA believed there was an intent to misrepresent the firm's status in order to win an award. Submitting offers for new set-aside awards would be. Similarly, failure to take timely action to allow an SBA status change to be reflected on the firm's *SAM.gov* profile could also be grounds for government-wide debarment or suspension if SBA believed that the firm's failure to accept the change was an intent to conceal the status change or otherwise deceive procuring agencies of its current status. SBA does not believe that that needs to be addressed in this regulation as the debarment and suspension regulations provide authority to initiate actions where a firm intentionally misrepresents its size or status.

Sections 121.1203 and 121.1204

Section 46(a)(4)(A) of the Small Business Act, 15 U.S.C. 657s(a)(4)(A), provides that in a contract mainly for supplies a small business concern shall supply the product of a domestic small business manufacturer or processor unless a waiver is granted after SBA reviews a determination by the applicable contracting officer that no small business manufacturer or processor can reasonably be expected to offer a product meeting the specifications (including the period of performance) required by the contract. Section 121.1203 of SBA's regulations provides guidance as to when SBA will grant a waiver to the nonmanufacturer rule in connection with an individual contract, and section 121.1204 identifies the procedures for requesting and granting waivers.

The proposed rule sought to clarify perceived ambiguities relating to the effect of a waiver in a multiple item procurement. For a multiple item set-aside contract, in order to qualify as a small business nonmanufacturer, at least 50 percent of the value of the contract must come from either small business manufacturers or from any businesses for items which have been granted a waiver to the nonmanufacturer rule (or small business manufacturers plus waiver must equal at least 50 percent). *See* 13 CFR 125.6(a)(2)(ii)(B). In seeking a contract-specific waiver to the nonmanufacturer rule, SBA's regulations provide that a contracting officer's waiver request must include a definitive statement of the specific item to be waived. The proposed rule clarified that for a multiple item procurement, a contracting officer must specifically identify each item for which a waiver is sought when the procuring agency believes that at least 50 percent of the estimated contract value is available only from other than small business manufacturers and processors. Of course, if at least 50% of the estimated contract value of the contract is composed of items manufactured or processed by small business, then a waiver of the nonmanufacturer rule is not required and there is no requirement that each item acquired in a multiple-item acquisition be manufactured or processed by a small business. The proposed rule also clarified that because a waiver is granted for specific items, once SBA reviews and concurs with an agency's request, SBA's waiver applies only to the specific item(s) identified, not to the entire contract.

SBA received comments both supporting and opposing the clarification that a contracting officer must specifically identify each item for which a waiver is sought. Those opposing the clarification believed it would disrupt and delay procurements, negatively affect the supply chain and the delivery of services to warfighters, and significantly harm small business opportunities. One commenter stated

that it understood why SBA proposed to require contracting officers to specifically identify each item in the multi-item procurement for which a contract-specific waiver is sought but was concerned that this will increase the administrative burden and make contracting officers less likely to request contract-specific waivers. Those supporting the clarification stated that the regulations already require this and that it is the appropriate approach to ensure that small business is actually benefitting from set-aside contracts. One commenter believed that if most of the items to be supplied through a multiple item procurement really are not made by small business manufacturers, maybe that procurement should not be set-aside for small business. It is true that small business resellers or nonmanufacturers would still benefit from such a procurement, but the value of the contract going to those small business nonmanufacturers versus the total value of the contract can be only a fraction of what could go to large business manufacturers. Another commenter stated too many times an agency uses some broad waiver (that doesn't specify exact items) to supply the product of a large business to the detriment of legitimate small business manufacturers. That commenter believed that it is fine to help small business non-manufacturers, but not at the expense of small business manufacturers.

One commenter believed that proposed § 121.1203(f) seemed to contradict § 121.406(d)(1). Section 121.406(d)(1) provides that if at least 50% of the estimated contract value of a multiple item procurement is composed of items that are manufactured by small business concerns, then a waiver of the nonmanufacturer rule is not required. Proposed § 121.1203(f) provided that for a multiple item procurement, a waiver must be sought and granted for each item for which the procuring agency believes no small business manufacturer or processor can reasonably be expected to offer a product meeting the specifications of the solicitation. SBA agrees that proposed § 121.1203(f) was misleading. SBA intended that provision to apply only where waivers were necessary to meet at least 50% of the value of the contract, not where it is clear that at least 50% of the value of the items to be procured will be supplied by small business. In addition, waivers are needed only to the extent that would enable at least 50% of the total estimated value of the items to be purchased to come from small business manufacturers or from large businesses for those items subject to a waiver. In other words, small plus waiver must equal at least 50% of the value of the contract. Small plus waiver does *not* need to equal 100% of the value of the contract. A contracting officer can select some items that are not manufactured by small business to request a waiver, but not others. As long as at least 50% of the anticipated value of the items to be procured in the aggregate come from small business or large business subject to a waiver, then the nonmanufacturer rule is met. The final rule clarifies that a waiver need not be sought if the conditions in § 121.406(d)(1) are present (*i.e.,* where at least 50% of the estimated contract value of the items to be procured are manufactured by small business concerns). The final rule also clarifies that a contracting officer need not seek a waiver for each item for which the procuring agency believes no small business manufacturer or processor can reasonably be expected to offer, but rather must seek a waiver with respect to such items in an amount that would bring the total estimated value of items to be supplied by small business and items subject to a waiver to be at least 50% of the value of the contract.

SBA again notes that prior to the proposed rule, SBA's regulations already required a contracting officer to provide ''[a] definitive statement of the specific item to be waived and justification as to why the specific item is required'' in order for SBA to grant a contract specific waiver. 13 CFR 121.1204(b)(1)(i). Thus, it is not a change in policy to require that in a multiple item procurement each item for which a waiver is sought must be specifically identified. However, SBA also understands the concern that specifying every part of a multifaceted end item could be overly burdensome. For example, aircraft X has many thousands of parts that make up the aircraft. To specify every part of the aircraft that might need to be replaced as a separate item for which a waiver must be sought would be burdensome. SBA does not expect that. In such a case, the waiver request should state spare parts relating to aircraft X as the item for which a waiver is sought. However, a waiver request cannot be so broad as to have no real identification (*e.g.,* all medical supplies). SBA has added clarifying language in the final rule to address what an ''item'' is for which a waiver needs to be sought.

SBA also does not agree that contracting officers would be less likely to use set-asides. In order to have a set-aside, at least 50% of the value of the expected items to be procured in the aggregate must come from small business manufacturers or large business manufacturers for which a waiver (either class or contract specific) has been granted. SBA has been told that more than 50% of the value of these multiple item procurements is often supplied by small businesses. When that is the case, waivers for individual items would not be required. Where at least 50% of the estimated value of items to be procured are not manufactured by small business, the contracting officer should request a waiver of one or more specific items that are required under the contract to achieve that 50% value requirement. And, as identified above, the waiver request can be somewhat broad if it is also specific (*e.g.,* all spare parts relating to aircraft X). SBA also notes that contracting officers should be able to rely on past performance. In other words, for a follow-on multiple item procurement if more than 50% of the value of the items on the previously awarded contract came from small business manufacturers or large business manufacturers for which the identified item(s) supplied were subject to a contract specific waiver, the follow-on contract should be set-aside for some type of small business. Contracting officers can project future compliance with the non-manufacturer rule based on past performance, and not knowing precisely what will be purchased under a multiple item procurement should not prevent the procurement from being set aside for small business.

The proposed rule also added a provision that prohibited contract-specific waivers for contracts with a duration of longer than five years, including options. When SBA grants an individual waiver with respect to a particular item, it does not necessarily mean that there are no small business manufacturers of that item. Instead, it could merely relate to the lack of availability of small business manufacturers for the specific contract at issue due to timing (*e.g.,* small business manufacturers are currently tied up with other commitments) or capacity (*e.g.,* there are small business manufacturers, but those manufacturers cannot provide the item in the quantity that is required). SBA firmly believes that the circumstances surrounding the availability of a specific item from small business manufacturers can greatly change in five years. Beyond five years, new small business manufacturers of a particular item could come into the market, or those previously committed to other projects or who were unable to previously supply the product in the

quantity or time constraints required by the contract could become available to meet the agency's requirements. As an alternative, SBA noted in the supplementary information to the proposed rule that SBA was also considering limiting waivers to five years for long term contracts but allowing a procuring agency to seek a new waiver for an additional five years if, after conducting market research, it demonstrates that there are no available small business manufacturers and that a waiver remains appropriate. The proposed rule specifically asked for comments on both approaches. SBA received three comments on the proposal relating to long-term contracts. All three favored the alternative approach which would allow a contracting officer to request a second contract-specific waiver to be effective after the first five years of a contract where the contracting officer can demonstrate that a waiver is still needed. SBA adopts the alternative approach in this final rule. This will make waivers relating to long-term contracts similar to what is required for a follow-on contract to a normal base and four option years contract. In that context, after a five-year contract is completed and an agency seeks to award a follow-on contract for the same requirements, an agency would be required to again conduct market research and determine that no small business manufacturer or processor reasonably can be expected to offer one or more specific products required by the new solicitation. The same will be required for a long-term contract. A procuring agency will be required to conduct new market research and demonstrate that a waiver is still needed beyond the first five years.

When an agency seeks an individual waiver to the nonmanufacturer rule in connection with a specific acquisition, SBA believes that the agency is ready to move forward with the acquisition process as soon as SBA makes a waiverdecision and expects the solicitation to be issued shortly after such a decision is made. That is why SBA's waiver decision letters provide that the waiver will expire in one year from the date of the waiver decision. SBA expects award to be made within one year. If it is not, SBA believes that the agency should come back to SBA with revised market research requesting that the waiver (or waivers in the case of a multiple item procurement) be extended. Similar to the rationale for not allowing individual waivers beyond five years on long-term contracts, the circumstances surrounding whether there are any small business manufacturers who are capable and available to supply products for a specific procurement may change in one year. Where an agency demonstrates that small business manufacturers continue to be unavailable to fulfill the requirement, SBA will extend the waiver(s). The proposed rule specifically incorporated this policy into a new § 121.1204(b)(5). SBA received three comments on this provision. Two commenters indicated that they had no objection to the proposal. One comment recommended that SBA should consider allowing a waiver decision to last for two years but did not provide accompanying rationale for that position. Presumably, the commenter believes that some procurement actions take longer than one year to finalize. As noted above, circumstances (availability and new manufacturers coming into the market) can change in a year. SBA believes that is the appropriate amount of time for a contract specific waiver to last for a pending procurement. SBA adopts the proposed language as final in this rule.

Although SBA believes that there is no current ambiguity, the proposed rule also added language specifying that an individual waiver applies only to the contract for which it is granted and does not apply to modifications outside the scope of the contract or other procurement actions. A waiver granted for one contract does not and was never intended to apply to another contract (whether that separate contract was a follow-on contract, bridge contract, or some other contract or order under another contract), but the proposed rule added this language nevertheless to dispel any possible misunderstanding. There was no opposition to this clarification, and SBA adopts it as final.

Finally, the proposed rule clarified that where an agency requests a waiver for multiple items, SBA may grant the request in full, deny it in full, or grant a waiver for some but not all of the items for which a waiver was sought. SBA's decision letter would identify the specific items that SBA identifies as waived for the procurement. SBA received no comments specifically addressing this provision. As such, SBA adopts it as final.

Section 121.1205

Section 121.1205 refers to the list of classes of products for which SBA has granted waivers to the Nonmanufacturer Rule. The reference in the current version of the regulation provides a link to a website that no longer exists. The proposed rule updated the reference to the correct website. A few commenters supported this update, and SBA adopts adding the correct website, which is *https://www.sba.gov/document/support-non-manufacturer-rule-class-waiver-list.*

Section 124.102

Section 124.102(c) provides that a concern whose application is denied due to size by 8(a) BD program officials may request a formal size determination with the SBA Government Contracting Area Office serving the geographic area in which the principal office of the business is located. SBA notes that during the processing of an application SBA itself can request a formal size determination pursuant to § 121.1001(b)(2)(i). The § 124.102(c) process applies only where SBA has not requested a formal size determination with respect to a specific applicant. Under § 124.102(c), if the concern requests a formal size determination and the Area Office finds it to be small under the size standard corresponding to its primary NAICS code, the concern can immediately reapply to the 8(a) BD program. SBA believes that a concern should not need to reapply to the 8(a) BD program if size was the only reason for decline. In such a case, SBA believes that the Associate Administrator for Business Development (AA/BD) should immediately certify the firm as eligible for the 8(a) BD program. The proposed rule made a distinction for applications denied solely based on size and those where size is one of several reasons for decline. Where size is not the only reason for decline, the proposed rule provided that the concern could reapply for participation in the 8(a) BD program at any point after 90 days from the AA/BD's decline. The AA/BD would then accept the size determination as conclusive of the concern's small business status, provided the applicant concern has not completed an additional fiscal year in the intervening period and SBA believes that the additional fiscal year changes the applicant's size. SBA received seven comments on proposed § 124.102. All comments received supported the proposed change that a concern whose application is denied due to size by 8(a) BD program officials should be able to request a formal size determination. The commenters also agreed that if size is the only reason for decline and OHA reverses SBA, the firm should be admitted to the 8(a) BD program without any further action being necessary on the part of the firm. As such, SBA adopts the proposed language in this final rule.

Section 124.103

Section 124.103 describes the rules pertaining to social disadvantage status. Section 124.103(c) details how an individual who is not a member of one of the groups presumed to be socially disadvantaged may establish his or her individual social disadvantage. It provides that an individual must identify an objective distinguishing feature that has contributed to his or her social disadvantage and lists physical handicap as one such possible identifiable feature. In order to be consistent with recent changes in terms made by the General Services Administration (GSA), 87 FR 6044, as well as with the Americans with Disabilities Act, the proposed rule changed the words physical handicap to identifiable disability. SBA received two comments supporting the proposed change and no comments objecting to it. As such, SBA adopts the proposed language in this final rule.

Section 124.104

Section 124.104 specifies the rules pertaining to whether an individual may be considered economically disadvantaged. Paragraph 124.104(c)(2)(ii) provides that funds invested in an Individual Retirement Account (IRA) or other official retirement account will not be considered in determining an individual's net worth. The paragraph then requires the individual to provide information about the terms and restrictions of the account to SBA in order for SBA to determine whether the funds invested in the account should be excluded from the individual's net worth. SBA does not believe that it is necessary for an individual to provide information about the terms and restrictions of a retirement account to SBA in every instance. As such, the proposed rule changed this provision to requiring an individual to provide information about the terms and restrictions of an IRA or other retirement account only when requested to do so by SBA. SBA received four comments supporting the change and one comment in opposition. The commenter opposing the change believed that removing the requirement could water down the economically disadvantaged criteria. SBA disagrees. The change will not affect SBA's ability to seek additional information relating to an IRA where appropriate. It merely eliminates the unnecessary burden of requiring an applicant to submit such information in every instance. SBA adopts the proposed change in this final rule.

This rule also deletes current § 124.104(c)(2)(iii). That provision provides that income received from an applicant or Participant that is an S corporation, limited liability company (LLC) or partnership will be excluded from an individual's net worth where the applicant or Participant provides documentary evidence demonstrating that the income was reinvested in the firm or used to pay taxes arising in the normal course of operations of the firm. SBA does not believe that this provision is necessary because the exact provision is contained in § 124.104(c)(3)(ii) in discussing how SBA treats personal income.

Section 124.105

Section 124.105 describes the ownership requirements pertaining to applicants and Participants for the 8(a) BD program. Paragraph 124.105(h) sets forth ownership restrictions for non-disadvantaged individuals and concerns, and § 124.105(h)(2) specifies ownership restrictions for non-Participant concerns in the same or similar line of business and for principals of such concerns. Current § 124.105(h)(2) recognizes a limited exception to the general ownership restriction for a former Participant in the same or similar line of business or a principal of such a former Participant. This paragraph does not, however, refer to or recognize another exception set forth elsewhere in SBA's regulations, and that is the exception set forth in § 125.9(d)(2) which allows an SBA-approved mentor to own up to 40 percent of its protégé. This proposed rule added language clarifying that the § 125.9(d)(2) authority applies equally to mentors in the same line of business as its protégé that is also a current 8(a) BD Program Participant. SBA received four comments regarding the proposed clarification that a mentor in the same or similar line of business can own up to 40 percent of its protégé firm. All four commenters supported the clarification. The final rule adopts the proposed language.

Paragraph 124.105(i) provides guidance with respect to changes of ownership, and § 124.105(i)(1) specifies that any Participant that was awarded one or more 8(a) contracts may substitute one disadvantaged individual for another disadvantaged individual without requiring the termination of those contracts or a request for waiver under § 124.515. There has been some confusion as to whether there can be a change of ownership for a former Participant that is still performing one or more 8(a) contracts. As noted in the proposed rule, this would generally not occur with one disadvantaged individual seeking to buy out a disadvantaged principal of a former 8(a) Participant. That is because of the one-time eligibility restriction. For any change of ownership to be approved by SBA, SBA must determine that the individual seeking to replace a former principal does in fact qualify as socially and economically disadvantaged under SBA's regulations. An individual who has previously participated in the 8(a) BD program and has used his or her individual disadvantaged status to qualify one 8(a) Participant would not be deemed disadvantaged if the individual sought to replace a principal of a second 8(a) Participant. Thus, the only individuals who could seek to replace the principal of a former 8(a) Participant would be those who have never participated in the 8(a) BD program before. To do so, such individuals would have to use their one-time eligibility to complete performance on previously awarded 8(a) contracts. The business concern could not be awarded any additional contracts because it is no longer an eligible Participant. If an individual thought the opportunity was sufficient to entice him or her to forego his/her one-time eligibility, he or she might proceed with such a transaction, but SBA does not believe that would often happen. The more likely scenario would be where an entity (tribe, ANC), Native Hawaiian Organization (NHO) or Community Development Corporation (CDC)) seeks to replace the principal of a former 8(a) Participant. The one-time eligibility restriction does not apply to entities. A tribe, ANC, NHO or CDC can own more than one business concern that participates in the 8(a) BD program. As such, an entity could purchase a former Participant and complete performance of any remaining 8(a) contracts. If the tribe, ANC, NHO or CDC seeking to replace the principal of a former 8(a) Participant has or has had a Participant in the 8(a) BD program, its general eligibility has already been established. However, if this would be the first time that a specific entity would own a business seeking 8(a) BD benefits, the entity must establish its overall eligibility. In the case of an Indian tribe or NHO, it must, among other things, demonstrate that it is economically disadvantaged. The proposed rule clarified that a change of ownership could apply to a former Participant as well as to a current Participant. SBA received nine comments supporting this clarification and no comments opposing it. The final rule adopts the proposed language.

Paragraph 124.105(i)(2) permits a change of ownership to occur without receiving prior SBA approval in certain specified circumstances, including where all non-disadvantaged individual owners involved in the change of ownership own no more than a 20 percent interest in the concern both before and after the transaction. To ensure that ownership interests are not divided up among two or more immediate family members to avoid SBA's immediate review of a change of ownership, the proposed rule provided that SBA will aggregate the interests of all immediate family members in determining whether a non-disadvantaged individual involved in a change of ownership has more than a 20 percent interest in the concern. Three commenters supported the change. One commenter supported the change but sought further clarification. That commenter believed that the term ''immediate family members'' in the proposed rule need to be defined and suggested that SBA either reference the list of family members stated in § 121.103(f), or add a definition of the term to § 124.105(i)(2). That commenter also believed that it was inconsistent for the change to cover immediate family members, but not any other ''persons with an identity of interest'' under § 121.103(f). Given that SBA treats persons with an identity of interest (regardless of type) as being ''one party,'' the commenter recommended that SBA should add persons with an identity of interest generally, such as individuals who are not family members but through common investments are deemed to be ''one party'' under § 121.103(f). SBA agrees and has made those changes in the final rule.

Section 124.107

Section 124.107 describes the policies relating to potential for success. In order to be eligible for the 8(a) BD program, an applicant concern must possess reasonable prospects for success in competing in the private sector. This requirement stems from the language contained in § 8(a)(7)(A) of the Small Business Act, 15 U.S.C. 637(a)(7)(A), which provides that no small business concern shall be deemed eligible for the 8(a) BD program unless SBA determines that with contract, financial, technical, and management support the concern will be able to perform 8(a) contracts and has reasonable prospects for success in competing in the private sector. There has been some confusion as to whether an applicant must demonstrate that it has specifically performed work in the private sector prior to applying to participate in the 8(a) BD program. That is not the case. The statutory requirement is that SBA must determine that with assistance from the 8(a) BD program a business concern will have reasonable prospects for success in competing in the private sector in the future. The regulation requires an applicant to demonstrate that it has been in business and received revenues in its primary industry classification for at least two full years immediately prior to the date of its 8(a) BD application, but it does not say that those revenues must have come from the private sector. A business concern that has performed no private sector work but has demonstrated successful performance of state, local or federal government contracts is eligible to participate in the 8(a) BD program. The proposed rule added language clarifying that intent. SBA received eight comments in response to the proposed clarification to § 124.107. All eight comments supported the proposed clarification that a firm can demonstrate potential for success with prior commercial and government contracts, including state and local government contract work. As such, SBA adopts the proposed language in this final rule.

Section 124.108

Section 124.108 establishes other eligibility requirements that pertain to firms applying to and participating in the 8(a) BD program. Paragraph 124.108(e) provides that an applicant will be ineligible for the 8(a) BD program where the firm or any of its principals has failed to pay significant financial obligations owed to the Federal Government. This proposed rule added language clarifying that where the firm or the affected principals can demonstrate that the financial obligations have been settled and discharged/forgiven by the Federal Government, the applicant will be eligible for the program. Five commenters supported this clarification as proposed. One commenter believed that the terms ''financial obligations owed'' and ''financial obligations have been settled and discharged/forgiven by the Federal Government'' are vague. SBA disagrees. The eligibility requirement pertaining to owing federal obligations to the Government has been in SBA's regulations for some time without confusion as to its meaning. Specifically, the regulation prior to the proposed change provided that ''[n]either a firm nor any of its principals that fails to pay significant financial obligations owed to the Federal Government . . . is eligible for admission to or participation in the 8(a) BD program.'' The proposed rule merely attempted to clarify that if the Government has settled a debt (*i.e.,* accepting less than the full amount owed to discharge the debt), the firm/individual would not be barred from participating in the 8(a) BD program on that basis alone. SBA adopts the proposed language in this final rule.

Section 124.109

Section 124.109 provides specific rules applicable to Indian tribes and Alaska Native Corporations for applying to and remaining eligible for the 8(a) BD program. SBA's regulations currently provide that the articles of incorporation, partnership agreement or limited liability company articles of organization of a tribally-owned applicant or Participant must contain express sovereign immunity waiver language, or a ''sue and be sued'' clause which designates United States Federal Courts to be among the courts of competent jurisdiction for all matters relating to SBA's programs. The proposed rule sought to make two changes with respect to that provision. First, the proposed rule clarified that the waiver of sovereign immunity should apply only to concerns owned by Federally-recognized Indian tribes. State recognized tribes are not deemed sovereign and, thus, do not need to waive sovereign immunity because they are already subject to suit. Second, concerns that are organized under tribal law may not have articles of incorporation, partnership agreements or limited liability company articles of organization and may be unable to strictly comply with the regulatory language. In response, SBA proposed to add language allowing tribally-owned concerns organized under tribal law to waive sovereign immunity in any similar documents authorized under tribal law.

The proposed rule also sought to make a change relating to the potential for success requirement for tribes. One of the ways a tribally-owned business can demonstrate potential for success needed to be eligible for the program is to demonstrate that it has been in business for at least two years, as evidenced by income tax returns for each of the two previous tax years showing operating revenues in the primary industry in which the applicant is seeking 8(a) BD certification. Not all tribally-owned concerns file federal income tax returns. The tax return requirement is intended to be an objective means by which a tribally-owned concern can show that it has been in business for at least two years with operating revenues. SBA believes that tax returns are not the only way for

a tribally-owned concern to demonstrate its business history. The proposed rule added a provision allowing a tribally-owned applicant to submit financial statements demonstrating that it has been in business for at least two years with operating revenues in the primary industry in which it seeks 8(a) BD certification.

SBA received six comments supporting these two changes and no comments opposing them. As such, SBA adopts the proposed language as final in this rule. SBA also received two comments pertaining to other provisions of § 124.109 that were not addressed in the proposed rule. Because any potential changes pertaining to those provisions are outside the scope of this rulemaking, SBA does not address them in this final rule.

Section 124.110

The proposed rule added a new § 124.110(d)(3) to allow the individuals responsible for the management and daily operations of an NHO-owned concern to manage two Program Participants. This would make the control requirements relating to NHO-owned applicants/Participants consistent with those applying to applicants/Participants owned by tribes and Alaska Native Corporations (ANCs). Although this is a statutory exemption for firms owned by tribes and ANCs, and is not for firms owned by NHOs, SBA believes that the policies relating to all three entity-owned applicants/Participants should be consistent whenever possible. SBA does not believe that this change for NHO-owned firms in any way contradicts any statutory requirement and would merely allow more flexibility for NHO-owned firms.

In addition, the proposed rule clarified the current policy regarding NHO ownership of an applicant or Participant small business concern. Although SBA currently requires an NHO to unconditionally own at least 51 percent of the applicant or Participant, the proposed rule merely made that requirement explicit in the regulations.

SBA received six comments supporting these two changes and no comments opposing them. Although one comment supported allowing an individual to be involved in controlling two NHO-owned 8(a) concerns, the commenter questioned what SBA means by a ''Native Hawaiian leader'' in the context of this regulation. The proposed language provided that an individual's officer position, membership on the board of directors or position as a Native Hawaiian leader does not necessarily imply that the individual is responsible for the management and daily operations of a given concern. This language was copied from the provision in § 124.109 for tribally owned firms. In the context of a tribe, the term ''leader'', as in tribal leader, has some definite meaning. SBA agrees that in the context of Native Hawaiians it does not. As such, the final rule adopts the proposed language with one change. The final rule deletes the reference to Native Hawaiian leader. SBA also received one comment questioning why NHOs cannot use holding companies as part of their ownership of 8(a) BD applicants and Participants as tribes and ANCs can. Although this issue is not part of this rulemaking, SBA will nevertheless address the reason for the disparate treatment. Section 8(a)(4)(A) of the Small Business Act, 15 U.S.C. 637(a)(4)(A), provides in pertinent part that the term ''socially and economically disadvantaged small business concern'' means any small business concern which is at least 51 percent unconditionally owned by ''(II) an economically disadvantaged Indian tribe (or a wholly owned business entity of such tribe), or (III) an economically disadvantaged Native Hawaiian organization . . .'' As noted, the statute specifically authorizes tribes (which is also defined to include ANCs) to own an 8(a) Participant through ''a wholly owned business entity of such tribe'' or in other words through a holding company. The statute does not provide similar authority for NHOs. NHOs have the same statutory requirement as socially and economically disadvantaged individuals, meaning that they must directly own at least 51 percent of an applicant or Participant concern. SBA does not have the authority to change that statutory requirement.

Section 124.204

Section 124.204 details how SBA processes applications for 8(a) BD program admission. It identifies that only the AA/BD can approve or decline an application for participation in the 8(a) BD program. There are, however, certain threshold issues that must be addressed before an application will be fully processed. Specifically, in SBA's electronic 8(a) application system, there are four fundamental eligibility questions that must be answered before an application will be reviewed: an applicant must be a for-profit business (*see* §§ 121.105 and 124.101); every individual claiming disadvantaged status must be a United States citizen (*see* § 124.101); neither the applicant firm nor any of the individuals upon whom eligibility is based could have previously participated in the 8(a) BD program (*see* § 124.108(b)); and any individually-owned applicant must have generated some revenues (*see* §§ 124.107(a) and 124.107(b)(1)(iv)). If an applicant answers that it is not a for-profit business entity, that one or more of the individuals upon whom eligibility is based is not a United States citizen (*see* § 124.104), that the applicant or one or more of the individuals upon whom eligibility is based has previously participated in the 8(a) BD program (*see* § 124.108(b)), or that the applicant is not an entity-owned business and has generated no revenues (*see* §§ 124.107(a) and 124.107(b)(1)(iv)), its application will be closed and it will be prevented from completing a full electronic application. Each of those four bases automatically renders the applicant ineligible for the program and further review would not be warranted. The proposed rule identified these four threshold issues that must be addressed before an application will be reviewed. SBA received two comments supporting identifying these four reasons that will stop the processing of an 8(a) BD application, one comment stating that threshold application questions are for SBA to determine, and no comments opposing this identification. The final rule adopts the proposed language.

Section 124.302

Section 124.302 addresses graduation and early graduation from the 8(a) BD program. In determining whether an applicant or Participant should be deemed economically disadvantaged, SBA previously required a concern to compare its financial condition to non-8(a) BD business concerns in the same or similar line of business. SBA eliminated that requirement as not being consistent with the statutory authority which requires only that an applicant or concern be owned and controlled by one or more individuals who are economically disadvantaged, not that the concern itself be economically disadvantaged. In addressing graduation, § 124.302(b) retained some of that same language requiring a comparison of an 8(a) BD Participant to non-8(a) businesses. SBA believes that too is inconsistent with the statutory language, which defines the term ''graduated'' or ''graduation'' to mean that a Program Participant is recognized as successfully completing the 8(a) BD program by substantially achieving the targets, objectives, and goals contained in its business plan, and demonstrating its ability to compete in the marketplace without assistance from the 8(a) BD program. 15 U.S.C. 636(j)(10)(H). As

such, the proposed rule removed § 124.302(b)(5), as not consistent with the statutory oversight responsibilities. The supplementary information to the proposed rule also noted that the requirements for graduation are adequately set forth in § 124.302(a)(1) of SBA's regulations and requested comments on whether the entire § 124.302(b) can be eliminated as unnecessary.

SBA received nine comments supporting the removal of § 124.302(b)(5). In addition, seven commenters recommended that the entire § 124.302(b) be removed as the provisions in § 124.302(a)(1) adequately establish the requirements for graduation. One commenter also believed that the language in § 124.302(b) is overly subjective and should be eliminated on that basis as well. In response to this comment, SBA more closely reviewed § 124.302(b). Although the paragraph is titled ''Criteria for determining whether a Participant has met its goals and objectives,'' much of § 124.302(b) pertains to the overall financial condition of the 8(a) BD Participant and not to the specific goals and objectives contained in the Participant's business plan. For that reason and because SBA agrees that § 124.302(a)(1) adequately explains what graduation means and what must occur in order for a firm to be graduated from the 8(a) BD program, the final rule removes the entire § 124.302(b) as unnecessary.

Section 124.304

Section 124.304 sets forth the procedures for early graduation and termination from the 8(a) BD program. The proposed rule added a provision to clarify that where SBA obtains evidence that a Participant has ceased its operations, the AA/BD may immediately terminate a concern's participation in the 8(a) BD program by notifying the concern of its termination and right to appeal that decision to OHA. SBA received two comments supporting this provision and no comments opposing it. The final rule adopts the proposed language. SBA continues to believe requiring SBA to go through the normal process to terminate a Participant from the 8(a) BD program (*i.e.,* providing an intent to terminate notice and a 30-day opportunity to respond) is unnecessary where it can be demonstrated that the concern has ceased its business operations. Nevertheless, the final rule requires SBA to notify the concern of its termination and provide it the right to appeal that decision to OHA.

Section 124.402

Section 124.402 requires each firm admitted to the 8(a) BD program to develop a comprehensive business plan and to submit that business plan to SBA as soon as possible after program admission. Currently, § 124.402(b) provides that SBA will suspend a Participant from receiving 8(a) BD program benefits if it has not submitted its business plan to its servicing district office within 60 days after program admission. There is a concern that § 124.402(b) does not clearly provide that a Participant's business plan must be approved by SBA before the concern is eligible for 8(a) contracts, as required by Section 7(j)(10)(D)(i) of the Small Business Act, 15 U.S.C. 636(j)(10)(D)(i). The proposed rule clarified that, consistent with the statutory language, SBA must approve a Participant's business plan before the firm is eligible to receive 8(a) contracts. However, SBA recognizes that some firms are admitted to the 8(a) BD program with self-marketed procurement commitments from one or more procuring agencies. SBA also understands that several newly admitted Participants have missed 8(a) contract opportunities in the past because SBA did not approve their business plans before the procuring agencies sought to award such procurement commitments as 8(a) contracts. SBA does not wish to discourage self-marketing activities or prevent a newly admitted Participant from receiving critical business development assistance. At the same time, SBA is constrained by the statutory language requiring business plan approval prior to the award of 8(a) contracts. The proposed rule merely prioritized business plan approval for any firm that is offered a sole source 8(a) requirement or is the apparent successful offeror for a competitive 8(a) requirement. Specifically, the proposed rule provided that where a sole source 8(a) requirement is offered to SBA on behalf of a Participant or a Participant is the apparent successful offeror for a competitive 8(a) requirement and SBA has not yet approved the Participant's business plan, SBA will approve the Participant's business plan as part of its eligibility determination prior to contract award.

SBA received 11 comments in response to the proposed change to § 124.402. Seven comments supported the rule to prioritize business plan review and approval for new 8(a) firms that were offered a sole source 8(a) requirement or were the apparent successful offeror for a competitive 8(a) requirement. Three comments opposed requiring business plan approval prior to a firm being awarded any 8(a) contract. These commenters believed that if a firm submitted its business plan to SBA within 60 days of certification, it should not matter whether SBA approved it before award. They rationalized that if the firm did everything it needed to do, the firm should not be penalized by SBA's failure to approve the business plan. As indicated above, SBA again notes that the authorizing legislation requires business plan approval prior to award. SBA cannot waive or disregard that statutory requirement. However, the intent of the proposed regulation was to ensure that business plan approval occurred in connection with a normal eligibility determination and that by doing so every Participant on whose behalf a sole source 8(a) requirement is offered or who was identified as the apparent successful offeror in an 8(a) competitive procurement would receive the award. Prioritizing business plan review and approval will ensure that such approval can be timely done and not adversely affect any 8(a) procurement. One comment recognized the statutory requirement but was concerned that performing a business plan review as part of an eligibility determination would slow down eligibility determinations and could cause procuring agencies to avoid using the 8(a) program. SBA disagrees. Currently, SBA generally performs an eligibility determination (either for a sole source offering or a competitive award) within five days, unless SBA seeks and a procuring agency agrees to a longer period. SBA's intent is to review and approve business plans within that same five-day period. Thus, SBA does not envision any additional time being added to the normal eligibility review timeframe. The final rule adopts the proposed language.

Section 124.403

Section 124.403 sets forth the requirements relating to business plans. Paragraph 124.403(a) provides that each Participant must annually review its business plan with its assigned Business Opportunity Specialist (BOS) and modify the plan as appropriate. The wording of this paragraph caused some to believe that a Participant needed to submit a business plan to SBA every year even where nothing had changed from the previous year. That was not SBA's intent. The ''as appropriate'' language was meant to infer that a Participant need not submit a business plan if nothing had changed from the previous year. The proposed rule clarified that a Participant must submit

a new or modified business plan only if its business plan has changed from the previous year.

SBA received seven comments supporting the provision to require business plan submissions only if a business plan had changed or been modified from the previous year and no comments opposing the provision. The commenters believed that eliminating needless submissions would reduce the paperwork burden on Participants and enable them to more thoroughly focus on business development. The final rule adopts the proposed language.

Sections 124.501, 126.609, 127.503(e), and 128.404(d)

There has been some confusion as to whether a contracting officer can limit an 8(a) competition (whether for an 8(a) contract or an order set-aside for 8(a) competition under an unrestricted contract) to Participants having more than one certification (*e.g.,* 8(a) *and* HUBZone). SBA believes that § 8(a)(1)(D)(i) of the Small Business Act, 15 U.S.C. 637(a)(1)(D)(i), requires any 8(a) competition to be available to all eligible Program Participants. SBA has consistently interpreted this provision as prohibiting SBA from accepting a requirement for the 8(a) BD program that seeks to limit an 8(a) competition only to certain types of 8(a) Participants, rather than allowing competition among all eligible Participants. In other words, SBA has interpreted this authority to prohibit an agency from requiring one or more other certifications in addition to its 8(a) certification. This interpretation is currently contained in § 125.2(e)(6)(i) but is not specifically contained in the 8(a) BD regulations. Likewise, the statutory authority for HUBZone set asides, 15 U.S.C. 657a(c)(2)(B), provides authority for competition restricted to certified HUBZone small business concerns and does not permit a ''dual'' set-aside for firms that are both HUBZone-certified and 8(a) Participants. The proposed rule added a sentence to § 124.501(b) to clarify SBA's position that prohibits a contracting activity from restricting an 8(a) competition to Participants that are also certified HUBZone small businesses, certified WOSBs or certified SDVO small businesses. SBA also proposed to make similar clarifications to the regulations for the SDVO (in § 125.22(d)), HUBZone (in new § 126.609), and WOSB (in § 127.503(e)) programs. As noted earlier, the SDVO program regulations have been moved to a new part 128 as part of implementing the Veteran Small Business Certification Program. *See* 87 FR 73400 (Nov. 29, 2022). As such, the final rule amends § 128.404(d) as opposed to § 125.22(d) as proposed.

SBA received ten comments supporting the clarification to more clearly set forth SBA's position prohibiting a contracting activity from restricting a competition to firms with multiple certifications. One commenter supported the provision but also recommended further clarification. Specifically, the commenter believed that agencies could follow the prohibition (*i.e.,* not limiting competition to firms with multiple certifications) but circumvent SBA's intent by providing significant evaluation preferences to firms with one or more other certifications, and thus exclude firms with one certification from any meaningful opportunity to be awarded a specific contract or order. The commenter recommended that SBA amend this provision to also specify that a procuring activity also cannot give additional evaluation points or any evaluation preference to firms having one or more additional certifications. SBA agrees and has added this language to each of the associated regulatory provisions: § 124.501(b) for the 8(a) BD program; § 126.609 for the HUBZone program; § 127.503(e) for the WOSB program; and § 128.404(d) for the SDVO program.

SBA also proposed to clarify § 124.501(b) by noting that an agency may award an 8(a) sole source order against a multiple award contract that was not set aside for competition only among 8(a) Participants. SBA believes that such awards are consistent with SBA's statutory authority at section 8(a)(16) of the Small Business Act, 15 U.S.C. 637(a)(16), to enter 8(a) sole source awards. Furthermore, this type of 8(a) sole source order is beneficial to both 8(a) Participants, who benefit from increased contracting opportunities, and to procuring agencies, that can take advantage of pre-negotiated terms and pricing. SBA received six comments in response to this provision. All comments received supported the proposed language. As such, SBA adopts the proposed language in this final rule.

The proposed rule also revised the introductory language to § 124.501(g). The revised language first required SBA to notify an 8(a) Participant any time SBA determines the Participant to be ineligible for a specific sole source or competitive 8(a) award. SBA notes that this is currently required in FAR 19.805–2, and is something that should occur routinely, but believes that highlighting this in SBA's regulations would be helpful. SBA also proposed to clarify that where a joint venture is the apparent successful offeror in connection with a competitive 8(a) procurement, SBA will determine whether the 8(a) partner to the joint venture is eligible for award but will not review the joint venture agreement to determine compliance with § 124.513. SBA believes that there was some confusion as to what an eligibility determination entailed in the context of a competitive 8(a) joint venture apparent successful offeror. The proposed rule sought to make clear that SBA's determination of eligibility relates solely to the 8(a) partner to the joint venture and does not represent a full review of the 8(a) joint venture under § 124.513. SBA received three comments supporting this clarification regarding the eligibility of a joint venture offeror, and no comments opposing it. One commenter also requested clarification as to whether a review of the joint venture agreement is required where a joint venture is offered a sole source order under a previously awarded competitive 8(a) multiple award contract. SBA does not believe that SBA should review the joint venture agreement itself in this context. The underlying contract is an 8(a) competitive award. SBA's regulations do not require review of joint venture agreements with respect to 8(a) competitive awards. Once awarded, SBA does not believe it should review joint venture agreements in connection with one or more individual sole source orders under the 8(a) multiple award contract. As such, SBA adopts the proposed language in this final rule with the added clarification regarding sole source orders to a joint venture under a previously competitively awarded 8(a) multiple award contract.

Finally, the proposed rule also made several clarifications to the bona fide place of business requirement contained in § 124.501(k). Section 8(a)(11) of the Small Business Act, 15 U.S.C. 637(a)(11), requires that to the maximum extent practicable 8(a) construction contracts ''shall be awarded within the county or State where the work is to be performed.'' SBA has implemented this statutory provision by requiring a Participant to have a bona fide place of business within a specific geographic location. In the October 2020 rulemaking, *supra,* SBA clarified that the Small Business Act does not differentiate between sole source 8(a) construction contracts and competitive 8(a) construction contracts. As such, the statutory ''maximum extent practicable'' requirement applies equally to sole source and competitive 8(a) contracts. SBA understands that

some have expressed the view that the ''to the maximum extent practicable'' statutory language should be read in a way that affords procuring agencies the discretion to broaden or do away with the bona fide place of business requirement where they deem it to be appropriate, for whatever reason. SBA disagrees that the statutory language affords such flexibility. In SBA's view, ''to the maximum extent practicable'' denotes Congress's intent that something be followed whenever possible, not merely when a procuring agency thinks it is the best option or appropriate in particular circumstances. Thus, SBA will continue to apply the bona fide place of business requirement to both sole source and competitive 8(a) construction procurements unless SBA determines that it is not ''practicable'' to do so. In this regard, because of the COVID–19 pandemic, employees in both the public and private sector were expected to telework on a significant basis. In response, SBA issued a Policy Notice temporarily placing a moratorium on the bona fide place of business requirement with respect to all 8(a) construction contracts offered to the 8(a) BD program prior to September 30, 2022, based on SBA's determination that it was not ''practicable'' to impose that requirement during the maximum telework policies. SBA Policy Notice 6000–819056 (August 25, 2021). Prior to the expiration of that Policy Notice, the SBA Administrator determined that requiring a bona fide place of business in a particular location continues to be impracticable due to the lingering effects of the COVID–19 pandemic and extended the moratorium on the requirement through September 30, 2023. SBA will continue to examine the practicality of the rule considering economic realities. Once the conditions exist that demonstrate that it is no longer impracticable to require a bona fide place of business, SBA will again implement the statutory provision to do so with respect to all construction requirements offered to the 8(a) program. As such, the proposed rule sought to clarify several components of the bona fide place of business requirement to be in place when the circumstances dictate that it is again practicable to enforce the rule.

Before discussing the specific proposed changes to the bona fide place of business rule and the comments received regarding those changes, SBA will first discuss the comments received to the rule in general. Several commenters agreed that current circumstances make it impracticable to require a bona fide place of business at this time and recommended that the moratorium be extended. As noted above, the moratorium is currently in place through September 30, 2023. Before the expiration of the moratorium, SBA will examine workplace realities. If telework policies and other economic conditions continue to make requiring a bona fide place of business impracticable, SBA will again extend the moratorium. SBA cannot, however, make that commitment at this point. Several other commenters urged SBA to eliminate the bona fide place of business rule entirely, believing that the rule is outdated and no longer makes sense. One commenter noted that the moratorium has demonstrated that construction work can be performed without a brick-and-mortar presence and recommended that the bona fide place of business rule be eliminated. SBA believes that it does not have the option of eliminating the requirement entirely. As noted above, the Small Business Act statutorily imposes a strong preference for local construction firms in the performance of 8(a) contracts. SBA has implemented that preference through the bona fide place of business rule. SBA cannot ignore that statutory language. A few commenters believed that the rule should apply only to competitive 8(a) construction requirements, but not to sole source 8(a) construction requirements. The statutory authority does not make a distinction between sole source and competitive requirements, but rather talks of all ''construction'' contracts awarded through the 8(a) BD program. As such, SBA believes that the statutory preference must be applied equally to all competitive and sole source 8(a) construction procurements. Recognizing the Small Business Act requirement, several other commenters applauded SBA's efforts to lessen the burden to establish a bona fide office. SBA will now address those proposed changes, the comments to them and SBA's response.

When SBA revised the bona fide place of business rule in October 2020, it intended that a Participant with a bona fide place of business anywhere in a particular state should be deemed eligible for a construction contract throughout that entire state (even if the state is serviced by more than one SBA district office). However, because the regulatory text used the word ''may'', several Participants sought clarification of SBA's intent. The proposed rule clarified SBA's intent.

The proposed rule also clarified that where a Participant is currently performing a contract in a specific state, it would qualify as having a bona fide place of business in that state for one or more additional contracts. This clarification is specifically intended to apply to the situation where a business concern is performing a construction contract in a specific location, the procuring activity likes the work done by the business concern and seeks to award an 8(a) construction contract to the same business concern in the same location as the previous contract. SBA believes that it does not make sense to say that a business concern is not eligible for such award because it has not officially sought and approved to have a bona fide place of business in that location. The proposed clarification, however, limited that exclusion only to the state where the firm is currently performing a contract. It provided that the Participant could not use contract performance in one state to allow it to be eligible for an 8(a) contract in a contiguous state unless it officially establishes a bona fide place of business in the location in which it is currently performing a contract (or in that contiguous state or another state touching that contiguous state).

The proposed rule also clarified that a Participant could establish a bona fide place of business through a full-time employee in a home office. In addition, an individual designated as the full-time employee of the Participant seeking to establish a bona fide place of business in a specific geographic location need not be a resident of the state where he/she is conducting business. In the past, some SBA district offices have required the designated employee to possess a driver's license issued by the state corresponding to the location of the office. SBA believes that is not appropriate. There is no requirement that a specific employee must permanently reside in a specific location. A Participant merely needs to demonstrate that one or more employees are operating in an office within the identified geographic location. A Participant should be able to rotate employees in and out of a specific location as it sees fit, and as long as one individual (but not necessarily the same individual) remains at that location, that location can be considered a bona fide place of business. Finally, the proposed rule provided guidance on how SBA interprets the bona fide place of business requirement where a contract requires work to be performed in more than one location and those different locations may not be within the boundaries of the bona fide place of business. Although this is SBA's current interpretation of the bona fide place of business requirement, SBA believes

putting it in the regulations will clarify any confusion that currently exists. For a single award 8(a) construction contract requiring work in multiple locations, the proposed rule provided that a Participant is eligible if it has a bona fide place of business where a majority of the work is to be performed. For a multiple award 8(a) construction contract, the proposed rule required a Participant to have a bona fide place of business in any location where work is to be performed.

Commenters overwhelmingly supported the specific proposed changes to make it easier to meet the bona fide place of business requirement. Commenters supported the changes regarding allowing home offices to meet the bona fide place of business requirement, noting that this will reduce overhead costs. Commenters also supported the clarification that an individual need not be a full-time resident of a state in order to count as an employee for bona fide office purposes. They believed that this clarification to allow ''floaters'' will provide needed flexibility to enable a firm to engage with clients in different states as needed and meet client needs more efficiently at a lower cost. SBA adopts the proposed language for those provisions in this final rule.

SBA also received several comments supporting the clarification regarding having an approved bona fide place of business in one state and being eligible for work in a contiguous state. One commenter sought further clarification of that provision. Specifically, the commenter asked whether an 8(a) construction firm that has a bona fide office in Virginia, but does not have a bona fide office in North Carolina, will qualify for an 8(a) sole source construction project in North Carolina because the states border each other. The language of the rule states that a firm will be eligible for work that will be performed in the geographical area serviced by a contiguous SBA district office to where the firm has a bona fide place of business (in addition to stating a firm will be eligible for work anywhere in a state in which the firm has a bona fide place of business). There are two SBA district offices servicing Virginia: the Washington Metropolitan Area District Office services northern Virginia and the Richmond District Office services the rest of Virginia. North Carolina has only one SBA district office, so any district office whose geographic area touches any part of North Carolina will be eligible for any 8(a) construction contract anywhere in the entire state. Only the geographic area serviced by the Richmond District Office touches North Carolina. As such, a firm having a bona fide place of business in the geographic area serviced by the Richmond District Office will be eligible for 8(a) construction contracts in North Carolina. Firms having a bona fide place of business in the geographic area serviced by the Washington Metropolitan Area District Office will be not eligible because the geographic area serviced by that office is not contiguous to that of the area serviced by the North Carolina District Office. SBA believes that the proposed regulatory language clearly stated that, and thus no change is needed to the regulatory text as proposed.

Several commenters also supported the proposed change regarding the guidance on how SBA interprets the bona fide place of business requirement where a contract requires work to be performed in more than one location and those different locations may not be within the boundaries of the bona fide place of business. Commenters agreed that a firm should not be required to have a bona fide place of business in each state in which work will be performed. One commenter requested SBA to define how it will determine what a ''majority'' of work will be for contracts with more than one location. SBA intends to apply this by the dollar value of the work to be performed. SBA also understands that a requirement may have an indefinite aspect to it where the dollar value to be performed at each location is not exactly known at the time of contract award. As such, the final rule adds language defining majority in terms of dollar value but also ties it to the ''anticipated'' work to be performed. A procuring agency should be able to identify where it anticipates a majority of the dollars on a contract will be spent.

Finally, several commenters recommended that the rule allow part-time employees to count in establishing a bona fide place of business. Although several commenters agreed that part-time employees should be sufficient to establish a bona fide place of business, most did not define what they believed a ''part-time'' employee to be. One commenter recommended that SBA adopt the definition of part-time employee used in the HUBZone program, believing that consistency between the programs was important. One commenter recommended that an individual who works at least 20 hours per week should count in establishing a bona fide place of business. This commenter believed that 20 hours per week evidences the small business concern's commitment to establish a bona fide place of business while at the same time giving it some needed flexibility. In the HUBZone program, a part-time employee counts as a HUBZone employee if the individual works a minimum of 40 hours during the four-week period immediately prior to the relevant date of review. 13 CFR 126.103. SBA does not believe that definition works in establishing a bona fide place of business for 8(a) construction contracts. If SBA applied that definition to the bona fide place of business rule, an individual could work 40 hours in one week and the ''office'' could be empty and closed for the remaining three weeks of the month. As noted above, the Small Business Act directs that 8(a) construction contracts generally be awarded within the county or State where the work is to be performed. SBA believes this means that a Participant small business concern must have a legitimate presence in the geographic area close to where the work is to be performed. SBA does not believe that a firm that could be closed three weeks every month meets that legitimate presence, but rather that there should be a presence at the bona fide place of business every week. SBA agrees with the commenter that 20 hours per week creates the proper balance between establishing a legitimate presence in a location and providing needed flexibility to small business construction firms. As such, SBA amends the definition of bona fide place of business in § 124.3 to allow a Participant to demonstrate a bona fide place of business in a location with at least one employee who works at least 20 hours per week at that location.

Section 124.503(a)

Section 124.503(a) provides that SBA will decide whether to accept a requirement offered to the 8(a) BD program within ten working days of receipt of a written offering letter if the contract value exceeds the SAT. In consideration of mutual responsibilities under SBA's 8(a) Partnership Agreements with federal procuring agencies, SBA has agreed to issue an acceptance letter or rejection letter for such offers within five business days unless the agency grants an extension. This proposed rule clarified that the ten-day acceptance timeframe under section 124.503(a) applies only to 8(a) offers made outside the 8(a) Partnership Agreement authority. One commenter recommended that the ten-day period be calendar days instead of business days. The regulatory text before this clarification identified the acceptance period as ten business days. The proposed rule did not seek to alter that timeframe. Rather, it merely intended to

formally recognize in the regulation that SBA and the procuring activity may agree to a shorter timeframe for SBA's review under a Partnership Agreement delegating 8(a) contract execution functions to the agency. As such, SBA adopts the proposed language in this final rule.

Section 124.503(a)(4)(ii) authorizes a procuring activity to award an 8(a) contract without requiring an offer and acceptance where the requirement is valued at or below the SAT and SBA has delegated its 8(a) contract execution functions to the agency. The paragraph goes on to provide that in such a case, the procuring activity must notify SBA of all 8(a) awards made under this authority. Some agencies have relied on this language to justify proceeding to award an 8(a) contract under the SAT without first requesting an eligibility determination from SBA of the apparent successful 8(a) contractor (which is required by § 124.501(g)). It was not SBA's intent to allow an award without a determination of eligibility being made. To do otherwise could result in agencies awarding 8(a) contracts to ineligible firms. Although it authorizes an expedited review, the partnership agreement between SBA and procuring agencies identifies that an eligibility determination must still be made in these cases. The proposed rule merely clarified that requirement in SBA's regulations. SBA received two comments supporting the clarification that SBA determines eligibility in cases where it has delegated 8(a) contract authority to procuring agency. Thus, SBA adopts the proposed language in this final rule.

Section 124.503(a)(5) authorizes a procuring agency to seek acceptance of an 8(a) offering letter with the AA/BD where SBA does not respond to an offering letter within the ten-day period set forth under § 124.503(a). The proposed rule clarified that this ten-day time period is intended to be ten business days. One commenter supported the clarification, and one opposed it. The comment in opposition recommended instead that the time frame be measured in calendar days. Because the language in § 124.503(a) is measured in business days, SBA believes it makes sense to consistently identify time periods throughout the section in the same way. As such, SBA adopts the proposed language as final in this rule.

Section 124.503(i)(1)(ii)

SBA's current regulations require a procuring agency to notify SBA where it seeks to reprocure a follow-on requirement through a pre-existing limited contracting vehicle which is not available to all 8(a) BD Program Participants and the previous/current 8(a) award was not so limited. *See* 13 CFR 124.504(d)(1). There has been some confusion as to whether this conflicts with § 124.503(i)(1)(ii), which provides that an agency need not offer or receive acceptance of individual orders into the 8(a) BD program if the underlying multiple award contract was awarded through the 8(a) BD program. These provisions were not meant to conflict. Although formal offer and acceptance is not required, it is important for SBA to be notified of any work that is intended to be moved to an 8(a) multiple award contract that was previously performed under an 8(a) contract that was not limited to specific 8(a) Participants (*i.e.,* either a sole source award to a specific Participant or an 8(a) competitive award that was open to all eligible Program Participants). As SBA noted in the supplementary information to the final rule implementing the notification requirement contained in § 124.504(d)(1), an 8(a) incumbent contractor may be seriously hurt by moving a procurement from an 8(a) sole source or competitive procurement to an 8(a) multiple award contract to which the incumbent is not a contract holder. *See* 85 FR 66146, 66163 (Oct. 16, 2020). In such a case, the incumbent would have no opportunity to win the award for the follow-on contract and would have no opportunity to demonstrate that it would be adversely impacted by the loss of the opportunity to compete for the follow-on procurement. SBA believes that not allowing an incumbent 8(a) contractor to compete for a follow-on contract where that contract accounts for a significant portion of its revenues contradicts the business development purposes of the 8(a) BD program.

In order to eliminate any confusion and ensure that notification occurs where a procuring agency seeks to issue an order under an 8(a) multiple award contract and some or all of the work contemplated in that order was previously performed through one or more other 8(a) contracts, the proposed rule amended § 124.503(i)(1)(ii) to clarify that an agency must notify SBA where it seeks to issue an order under an 8(a) multiple award contract that contains work that was previously performed through another 8(a) contract. Where that work is critical to the business development of a current Participant that previously performed the work through another 8(a) contract and that Participant is not a contract holder of the 8(a) multiple award contract, SBA may request that the procuring agency fulfill the requirement through a competition available to all 8(a) BD Program Participants.

SBA received six comments agreeing that SBA should be notified when standalone 8(a) work is migrating as an order under an 8(a) multiple award contract. SBA adopts the proposed language.

Section 124.503(i)(1)(iv)

SBA's current regulations authorize a sole source 8(a) order to be awarded under a multiple award contract to a multiple award contract holder where the multiple award contract was set-aside or reserved for exclusive competition among 8(a) Participants. The procuring agency must offer, and SBA must accept, the order into the 8(a) BD program on behalf of the identified 8(a) contract holder. To be eligible for the award of a sole source order, SBA's regulations currently specify that a concern must be a current Participant in the 8(a) BD program at the time of award of the order. There has been some confusion as to whether the business activity target requirements set forth in § 124.509 apply to the award of such an order. In other words, it was not clear whether a Participant seeking a sole source 8(a) order under a multiple award contract set-aside or reserved for eligible 8(a) Participants needed to be in compliance with any applicable competitive business mix target established or remedial measure imposed by § 124.509 at the time of the offer/acceptance of the order. Because SBA is determining eligibility anew at the time of a new sole source order, it was always SBA's intent to not only require a firm to still be a current and otherwise eligible 8(a) Participant at the time of offer/acceptance of a sole source order, but to also require the firm to be in compliance with any applicable competitive business mix target established or remedial measure imposed by § 124.509. As such, the proposed rule clarified that compliance with the § 124.509 business activity target requirements will be considered before SBA will accept a sole source 8(a) order on behalf of a specific 8(a) Participant multiple award contract holder. Where an agency seeks to issue a sole source order to a joint venture, the proposed rule clarified that SBA will review and determine whether the lead 8(a) partner to the joint venture is currently an eligible Program Participant and in compliance with any applicable competitive business mix target established or remedial measure imposed by § 124.509. SBA received 21 comments in response to this proposal. Nineteen comments supported the

proposed language specifically authorizing sole source awards under 8(a) multiple award contracts and requiring eligibility and business activity target compliance at the time of the order award. These commenters believed that any sole source award, whether an individual contract or an order under a previously awarded multiple award contract, should be treated similarly. In other words, these commenters agreed with SBA's position that eligibility for a sole source 8(a) order must be determined as of the date of the order, not the underlying multiple award contract itself. Two commenters opposed the proposed change. They believed that it would harm 8(a) firms that were awarded 8(a) multiple award contracts but have grown throughout the life of the contract. SBA notes that Participants that received an 8(a) multiple award contract will generally continue to be eligible for orders that are competitively awarded under that contract throughout the life of the contract. Of course, a contracting officer may request recertification of size and/or eligibility with respect to a specific order and recertification of size and status must occur after the fifth year on a long-term contract, but firms that grow to be other than small and/or firms that have graduated or otherwise left the 8(a) BD program may be awarded competitive orders under the multiple award contract. However, SBA continues to believe that sole source awards are unique. Sole source authority does not derive directly from an underlying competitively awarded 8(a) multiple award contract. SBA believes that the rules governing the award of a sole source 8(a) contract should also apply to the award of a sole source 8(a) order. That means that a firm must still be an eligible Participant that qualifies as small as of the date the order is issued. Part of any eligibility determination for a sole source award is an examination of a Participant's compliance with its applicable business activity target. Therefore, SBA adopts the proposed language as final.

In addition, the proposed rule further clarified the rules pertaining to issuing sole source orders to joint ventures under an 8(a) multiple award contract. There has been some confusion as to whether the requirement set forth in § 121.103(h) that a joint venture may not be awarded contracts beyond a two-year period, starting from the date of the award of the first contract, applies to such sole source orders and whether SBA must approve the joint venture in connection with the sole source order as generally required by § 124.513(e)(1). The proposed rule specifically clarified that the two-year restriction does not apply to a sole source 8(a) order under an 8(a) multiple award contract. In other words, the sole source order can be issued more than two years after the date the joint venture received its first contract award. In addition, the proposed rule provided that SBA would not review and approve a joint venture where the joint venture had already been awarded a competitive 8(a) multiple award contract and is seeking a sole source 8(a) order under that multiple award contract at some point during the performance period of the contract. SBA believes that the general requirement set forth in § 124.513(e)(1) that SBA review a joint venture in connection with a sole source 8(a) award should not apply to sole source orders issued under a competitively awarded 8(a) multiple award contract because the joint venture's eligibility for the contract was already established at the award of the underlying contract. The procuring agency and other interested parties had the opportunity to challenge whether the joint venture was properly formed at that time. SBA received two comments supporting the proposed clarifications relating to joint ventures and no comments opposing them. As such, SBA adopts the proposed language in this final rule.

Finally, in making this clarification to § 124.509, SBA noticed two instances in SBA's rules where SBA intended to cross reference § 124.509, but instead cited to § 124.507. This rule amends §§ 124.303(a)(15) and 124.403(c)(1) to change the cross reference to § 124.509.

Section 124.503(i)(2)(ii)

SBA has received inquiries as to whether an agency can issue an order under the Federal Supply Schedule (FSS) as an 8(a) award, and if so, what procedures must be used. As with any unrestricted multiple award contract, SBA believes that an order can be issued under the FSS as an 8(a) award if the procedures set forth in § 124.503(i)(2) are followed. This means that the following requirements must be met: the order must be offered to and accepted into the 8(a) BD program; the order must require the concern to comply with applicable limitations on subcontracting provisions and the nonmanufacturer rule, if applicable, in the performance of the individual order; before award, SBA must verify that the identified apparent successful offeror is an eligible 8(a) Participant as of the initial date specified for the receipt of proposals contained in the order solicitation, or at the date of award of the order if there is no solicitation; and the order must be competed exclusively among only the 8(a) awardees of the underlying multiple award contract. There is some confusion as to what that last requirement means. In the case of a multiple award contract awarded under full and open competition, SBA believes that the current regulatory language is clear. All contract holders that have certified as 8(a) eligible must be able to submit an offer for the order if they choose. An agency cannot limit competition to a subset of contract holders that have claimed to be 8(a) eligible. Of course, the apparent successful offeror's eligibility must be verified by SBA prior to award to ensure that the concern was in fact an eligible Participant as of the initial date specified for the receipt of offers contained in the order solicitation, or at the date of award of the order if there is no solicitation. For an order under the FSS that an agency seeks to issue through the 8(a) BD program, there has been some confusion as to what procedures must be used to issue the order. Specifically, agencies have told SBA that it is not clear whether an agency can merely follow the FAR 8.4 requirements or must allow all FSS holders who claim 8(a) status the opportunity to compete. SBA believes that orders issued under the FSS are unique from orders issued under multiple award contracts competed using full and open competition. GSA has established procedures for issuing orders under the FSS. SBA believes that those procedures should be used when an agency seeks to issue an 8(a) award under the FSS. The proposed rule clarified that distinction. An agency need not open the order up to competition among all FSS contract holders claiming 8(a) status. However, an agency must consider the quote from any FSS contract holder claiming 8(a) status who submits one. As with 8(a) orders issued under unrestricted multiple award contracts, however, the apparent successful offeror for an 8(a) order under the FSS must be an eligible Participant as of the initial date specified for the receipt of offers contained in the request for quote, or at the date of award of the order if there is no solicitation. Several commenters supported these clarifications, and none opposed. As such, SBA adopts the proposed language as final in this rule.

Section 124.504

Section 124.504(d) sets forth the procedures authorizing release of a follow-on requirement from the 8(a) BD program. Paragraph (d)(3) provides that SBA will release a requirement where the procuring activity agrees to procure

the requirement as a small business, HUBZone, SDVO small business, or WOSB set-aside. Some procuring activities have read this to mean that SBA will always release a requirement from the 8(a) BD program if the procuring activity agrees to procure the requirement as a small business, HUBZone, SDVO small business, or WOSB set-aside. That was not SBA's intent. The 8(a) BD program is a business development program. SBA takes that purpose seriously and will always consider whether an incumbent 8(a) contractor would be adversely affected by the release of a follow-on procurement from the 8(a) BD program. Accordingly, the proposed rule amended § 124.504(d)(3) by changing the words ''SBA will release'' to ''SBA may release'' to clarify that SBA has discretion in any release decision. The fact that a procuring activity agrees to procure the requirement as a small business, HUBZone, SDVO small business, or WOSB set-aside is a positive factor for release, but SBA must still consider any adverse consequences to an incumbent 8(a) Participant. The release process has also caused some confusion regarding how a follow-on requirement may be procured if SBA agrees to release. Again, the current rule provides that release may occur only where a procuring activity agrees to procure the requirement as a small business, HUBZone, SDVO small business, or WOSB set-aside. In other words, a strict reading of the rule would not allow release where an agency seeks to award a follow-on requirement as a set-aside order under a multiple award contract that is not itself a set-aside contract. Thus, even if an agency sought to procure a follow-on requirement as an 8(a) order under an unrestricted multiple award contract, the current regulatory language could be read to preclude that approach. That was not SBA's intent. As long as an agency identifies a procurement strategy that would target small businesses for a follow-on procurement, release may occur. In fact, release to such a contract vehicle may be appropriate where the incumbent 8(a) contractor has graduated from the program but still qualifies as a small business, the requirement is critical to the incumbent contractor's overall business development, the incumbent contractor is a contract holder on an unrestricted multiple award contract, and the procuring agency has evidenced its intent to set-aside an order for small business under the multiple award contract for which the incumbent contractor is a contract holder. This would give the incumbent contractor the opportunity to compete for the follow-on procurement and ensure that award would be made to a small business. The proposed rule clarified that release may occur whenever a procuring agency identifies a procurement strategy that would emphasize or target small business participation.

SBA received 11 comments supporting this clarification and no comments opposing it. Commenters believed that an 8(a) incumbent contractor may be seriously hurt by moving a procurement from an 8(a) sole source or competitive procurement to an 8(a) multiple award contract to which the incumbent is not a contract holder (such as a FSS holder) because the incumbent, who may have done a fantastic job in the past, would have no opportunity to be awarded for the follow-on contract, nor would it have the opportunity to demonstrate that it would be adversely impacted by the loss of the opportunity to compete for the follow-on procurement. Commenters also supported the provision requiring a procuring agency to ''coordinate with'' SBA when it seeks to re-procure a follow-on requirement through a pre-existing, limited contracting vehicle that is not available to all 8(a) Participants. They believed that this will facilitate meaningful dialogue between the procurement agency and SBA and promote the purposes of the 8(a) program. SBA agrees with the comments and adopts the proposed language in this final rule.

Section 124.506(b)(3)

In explaining SBA's ability to accept a sole source 8(a) requirement on behalf of a tribally-owned, ANC-owned or NHO-owned Participant above the general competitive threshold amounts, § 124.506(b)(2) provided that a procurement may not be removed from competition to award it to a Tribally-owned, ANC-owned or NHO-owned concern on a sole source basis. There has been some confusion as to what the phrase ''may not be removed from competition'' means. Some have misinterpreted this provision to believe that a follow-on requirement to one that was previously awarded as a competitive 8(a) procurement cannot be awarded to an entity-owned firm on a sole source basis above the applicable competitive threshold. That is not SBA's intent. The provision prohibiting a procurement from being removed from competition and awarded to an entity-owned Participant on a sole source basis was meant to apply only to a current procurement, not the predecessor to a current procurement. A procuring agency may not evidence its intent to fulfill a requirement as a competitive 8(a) procurement, through the issuance of a competitive 8(a) solicitation or otherwise, cancel the solicitation or change its public intent, and then procure the requirement as a sole source 8(a) procurement to an entity-owned Participant. A follow-on procurement is a new contracting action for the same underlying requirement, and if the procuring agency has not evidenced a public intent to fulfill it as a competitive 8(a) procurement it can be fulfilled on a sole source basis to an entity-owned Participant. The proposed rule added language clarifying that intent. SBA received 12 comments supporting the clarification to allow a sole source award to an entity-owned Participant where the procuring activity has not evidenced its intent to fulfill the current requirement as a competitive 8(a) procurement and no comments opposing it. As such, SBA adopts the proposed language in this final rule.

The proposed rule also sought comments as to whether a specific provision should be added to the regulations requiring SBA to consider the effect that losing an opportunity to compete for a follow-on contract would have on an incumbent Participant's business development where the follow-on procurement is offered to SBA as a sole source 8(a) procurement on behalf of an entity-owned Participant. In response, SBA received five comments. The comments opposed adding such a provision to the regulations. Commenters noted that while they understood SBA's intent to ensure program participants are not negatively impacted when a follow-on 8(a) procurement is awarded on a sole source basis, they believed that procuring agencies should have discretion in how best to procure a requirement through the 8(a) BD program. Commenters also noted that a procuring agency oftentimes changes its procurement strategy because of an incumbent's unsatisfactory performance on a contract. They believed that a procuring agency should not be saddled with a contractor whose performance is lacking merely because the contract would advance the firm's business development. Finally, one commenter also believed that it is important to consider the business development needs of all Participants, meaning both the entity-owned Participants as well as the Participants who previously performed certain incumbent contracts in this context. SBA believes that a specific regulatory change is not needed to capture SBA's role in ensuring that

the business development purposes of the 8(a) BD program are served. As such, SBA makes no further changes to this section in the final rule.

Section 124.506(d)

The proposed rule clarified SBA's rules pertaining to the award of sole source 8(a) contracts to individually-owned 8(a) Participants. The proposed rule added a provision to § 124.506(d) to clarify that an individually-owned 8(a) Participant could receive a sole source award in excess of the $4.5M and $7M competitive threshold amounts set forth in § 124.506(a)(2) where a procuring agency has determined that one of the exceptions to full and open competition set forth in FAR 6.302 exists. For example, if a procuring agency has determined that an unusual and compelling urgency exists and has identified an individually-owned 8(a) Participant that is capable of fulfilling its needs, the agency can offer that requirement to SBA as a sole source award on behalf of the identified Participant even if the requirement exceeds the applicable competitive threshold. Because the agency could use its authority under FAR 6.302 to award a sole source contract outside the 8(a) BD program, SBA believes that it only makes sense to allow the agency to make an award as a sole source contract within the 8(a) BD program if it chooses to do so.

In addition, if such an award exceeds $25M, or $100M for a Department of Defense (DoD) agency, the proposed rule also clarified that the agency would be required to justify the use of a sole source contract under FAR 19.808–1 or Defense Federal Acquisition Regulation Supplement (DFARS) 219.808–1(a) before SBA could accept the requirement as a sole source 8(a) award. Although those justifications and approvals generally apply to sole source 8(a) contracts offered to SBA on behalf of entity-owned Program Participants, the FAR and DFARS justification and approval provisions are not restricted to entity-owned Participants. Instead, those provisions apply to any 8(a) sole source contract that exceeds the $25M or $100M threshold. As such the proposed rule merely added language to clarify what SBA believes the current requirement is and does so in order to avoid any confusion.

SBA received four comments on these proposed clarifications. Three supported the clarifications and one opposed. The one comment in opposition believed that allowing a sole source award above the competitive thresholds to an individually-owned Participant could lead to small businesses being exploited. The three comments supporting the changes agreed that if an agency could justify the use of a sole source award outside the 8(a) program, it makes sense to allow them to use the 8(a) program instead. SBA does not agree with the one commenter's concerns that a small business could be exploited because of this change. The authority that SBA recognizes is very limited. A procuring activity must be able to justify a sole source award to a particular Participant based on one of the FAR 6.302 exceptions to full and open competition. If that justification exists, SBA not allowing the procuring activity to use the 8(a) BD program would not prevent an award to the identified concern from occurring. The award could still be made to the same small business concern, and the activity could still count the award towards its small disadvantaged business goal. A sole source award outside the 8(a) BD program, however, would not necessarily require inclusion of the applicable limitations on subcontracting provision. If the limitations on subcontracting provision were not included, the concern could subcontract any portion of the award to one or more other business concerns. SBA believes that there is a greater chance for exploitation in that scenario than through an 8(a) award. Thus, SBA adopts the language as proposed in this final rule.

Section 124.509

Section 124.509 establishes non-8(a) business activity targets to ensure that Participants do not develop an unreasonable reliance on 8(a) awards. SBA amended this section as part of a comprehensive final rule in October 2020. *See* 85 FR 66146, 66189 (Oct. 16, 2020). In that final rule, SBA recognized that a strict prohibition on a Participant receiving new sole source 8(a) contracts should be imposed only where the Participant has not made good faith efforts to meet its applicable non-8(a) business activity target. Since that rule became effective in November 2020, Participants have sought guidance as to how they may demonstrate their good faith efforts. The proposed rule sought to provide guidance by incorporating SBA's interpretation of good faith efforts in this context. Specifically, the proposed rule provided two ways by which a Participant could establish that it has made good faith efforts. Specifically, a Participant could demonstrate to SBA either that it submitted offers for one or more non-8(a) procurements which, if awarded, would have given the Participant sufficient revenues to achieve the applicable non-8(a) business activity target during its just completed program year, or explain that there were extenuating circumstances that adversely impacted its efforts to obtain non-8(a) revenues. This proposed rule also identified possible extenuating circumstances, which would include but not be limited to a reduction in government funding, continuing resolutions and budget uncertainties, increased competition driving prices down, or having one or more prime contractors award less work to the Participant than originally contemplated.

Commenters largely supported SBA's efforts to provide clarity on how a Participant may demonstrate that it made good faith efforts to meet its applicable non-8(a) business activity target. One commenter urged SBA to adjust the period of measurement for submitting offers for non-8(a) procurements, which, if awarded, would have given the Participant sufficient non-8(a) revenues to achieve the applicable non-8(a) business activity target during its just completed program year. This commenter believed that providing a list of proposals submitted during the applicable program year (irrespective of award or when contract revenues would be realized) would provide a more bright-line and consistent approach. While SBA recognizes the value of clear regulatory standards, compliance with the business activity target requirement is measured based on a Participant's 8(a) and non-8(a) revenues in a given program year. As such, in assessing whether a Participant has made good faith efforts to meet its applicable non-8(a) business activity target, SBA believes it should only consider non-8(a) receipts which would have been realized during the relevant program year. In addition, it is unclear how SBA should treat contract revenues that would not be derived in the pertinent program year. In SBA's view, a Participant must demonstrate to SBA that it submitted offers for one or more non-8(a) procurements which, if awarded during its just completed program year, would have given the Participant sufficient revenues to achieve the applicable non-8(a) business activity target during that same program year. The final rule revises the proposed language to clarify this policy. In addition, two commenters urged SBA to expand the list of extenuating circumstances that may be considered to include: unanticipated labor or supply shortages which may preclude a Participant from submitting a proposal;

and marketing efforts such as responding to an agency's Request for Information or attendance at industry days or other procurement conferences. As proposed, the regulatory text provides that the list of extenuating circumstances is not exhaustive. This is consistent with SBA's intent to consider all relevant circumstances out of the Participant's control which adversely impacted its efforts to obtain sufficient non-8(a) revenues. This rule adopts the proposed language as final.

There has also been some confusion as to how SBA should best track business activity targets. The statutory requirement for such targets relates to program years, meaning a Participant should receive a certain percentage of non-8(a) business during certain years in the program. In the October 2020 final rule, SBA changed all references to looking at business activity compliance from fiscal year to program year to align with the statutory authority. A program year lines up with the date that a Participant was certified as eligible to participate in the 8(a) BD program. That date generally is not the same as a Participant's fiscal year. Participants have financial statements relating to their fiscal year activities, but most do not have financial statements relating to program year. To capture program year data, SBA has asked Participants to estimate as best they can program year revenues for both 8(a) and non-8(a) activities. However, it was brought to SBA's attention that these sales estimates were difficult to prepare and inaccurate. In response to these concerns, the proposed rule specifically requested comments as to how firms believe it would be easiest for them to meet the program year information requirements. The supplementary information to the proposed rule explained that SBA was considering an approach to capture program year data based on the Participant's interim financial statements. This would require a Participant to submit monthly, quarterly, or semi-annual financial statements, as appropriate, to SBA where the close of its fiscal year and its program anniversary date are separated by more than 90 calendar days. SBA could then assess the Participant's compliance with the business activity target based on the breakdown of 8(a) and non-8(a) sales set forth in the applicable interim financial statements. For example, Participant A's fiscal year closes on December 31, and its program anniversary date is May 9. In connection with its annual review, Participant A would submit quarterly financial statements for the periods of April 1–June 30, July 1–September 30, and October 1–December 31, from its most recently completed fiscal year, and the period of January 1–March 31 in its current fiscal year. SBA could then determine Participant A's compliance with the applicable business activity target based on the breakdown of 8(a) and non-8(a) sales during the 12-month period covered by these quarterly financial statements. While this approach would exclude revenues derived during the final weeks or months leading up to a Participant's program anniversary date, SBA explained that it would most closely capture a Participant's program year activities without placing an undue burden on the Participant to estimate its 8(a) and non-8(a) revenues on a program year basis.

Commenters were split on SBA's approach to capture program year business activity based on interim financial statement figures. Three commenters confirmed that the incumbent policy requiring Participants to estimate their 8(a) and non-8(a) sales on a program year basis is challenging and yields inaccurate figures, especially where a Participant's program anniversary date falls in the middle of a calendar month. On the other hand, four commenters voiced concern that requiring a Participant to submit its interim financial statements would impose an undue administrative burden and cost on the 8(a) community. One such commenter urged SBA to accept interim financial statements prepared in-house if this approach is adopted. Through its independent research, SBA recognizes that it could be burdensome on some businesses to report sales estimates based on interim reporting periods spanning different fiscal years where they do not currently prepare interim quarterly statements. After carefully considering these comments and findings, SBA will continue to allow Participants to estimate as best they can program year revenues for both 8(a) and non-8(a) activities. The final rule revises § 124.509 to explicitly incorporate SBA's current business activity reporting policy. However, as noted above, SBA is mindful that estimating program year sales in this manner is neither practical nor precise for some 8(a) Participants. To address these concerns, the final rule will also revise § 124.509 to permit program year sales reporting based on the Participant's interim financial statement figures, which may be prepared in-house. Because SBA does not seek to impose unnecessary reporting or compliance burdens on the 8(a) portfolio, the final rule provides that a Participant need not submit the underlying monthly, quarterly, or semi-annual financial statements in connection with its annual review. SBA believes this approach will reduce administrative burdens across the entire 8(a) portfolio while simultaneously promoting accurate reporting and oversight.

Sections 124.513(a), 126.616(a)(2), 127.506(a)(3), and 128.402(a)(3)

The proposed rule added a new § 124.513(a)(3) to provide that a Program Participant cannot be a joint venture partner on more than one joint venture that submits an offer for a specific 8(a) contract. Although the proposed rule applied this requirement to all contracts, procuring agencies and small businesses have raised concerns to SBA in the context of multiple award contracts where it is possible that one firm could be a member of several joint ventures that receive contracts. In such a situation, several agencies were troubled that orders under the multiple award contract may not be fairly competed if one firm was part of two, three or more quotes. They believed that one firm having access to pricing information for several quotes could skew the pricing received for the order.

To ensure that the HUBZone, WOSB and SDVOSB programs have rules as consistent as possible to those for the 8(a) BD program, the proposed rule added similar language as that added to § 124.513(a)(3) for those programs in proposed § 125.18(b) (for SDVOSB), § 126.616(a)(2) (for HUBZone), and § 127.506(a)(3) (for WOSB).

The proposed rule also specifically requested comments as to whether this provision should be limited only to 8(a)/HUBZone/WOSB/SDVOSB multiple award contracts or whether it should apply to all contracts set-aside or reserved for 8(a)/HUBZone/WOSB/SDVOSB, and to all orders set-aside for such businesses under unrestricted multiple award contracts.

SBA received seven comments responding to whether a firm should be able to be a joint venture partner on more than one joint venture that submits an offer for a specific small business contract. All commenters supported the proposed change. Commenters believed that the changes will help maintain fair market competition within the small business programs and prevent firms from unduly benefiting from the programs at the expense of other, less sophisticated small business concerns. Commenters also believed that the rule should apply to all contracts set-aside or reserved for

8(a)/HUBZone/WOSB/SDVOSB, and to all orders set-aside for such businesses under unrestricted multiple award contracts. As such, SBA adopts the changes to § 124.513(a)(3) (for the 8(a) program), to § 126.616(a)(2) (for the HUBZone program), and to § 127.506(a)(3) (for the WOSB program). Although the proposed rule also amended § 125.18(b) for joint ventures relating to the SDVO program, the final rule modifies § 128.402(a)(3) instead. SBA included the same provision in the final rule implementing the Veteran Small Business Certification Program and is already contained in § 128.402(a)(3) of SBA's regulations for the SDVO program. *See* 87 FR 73400 (Nov. 29, 2022). This final rule slightly modifies the language in § 128.402(a)(3) to be identical to that for the HUBZone and WOSB programs. The restriction on being a member of more than one joint venture will apply equally to apply to all contracts or orders set-aside or reserved for the 8(a), HUBZone, WOSB, or SDVO programs.

Section 124.515

Section 124.515 implements section 8(a)(21) of the Small Business Act, 15 U.S.C. 637(a)(21), which generally requires an 8(a) contract to be performed by the concern that initially received the contract. In addition, the statute and § 124.515 provide that where the owner or owners upon whom eligibility was based relinquish ownership or control of such concern, any 8(a) contract that the concern is performing shall be terminated for the convenience of the Government unless the SBA Administrator, on a nondelegable basis, grants a waiver based on one or more of five statutorily identified reasons. The proposed rule revised § 124.515(c) for clarity. Specifically, it broke one longer paragraph into several smaller subparagraphs and clarified that if a Participant seeks a waiver based on the impairment of the agency's mission or objectives, it must identify and provide a certification from the procuring agency relating to each 8(a) contract for which a waiver is sought.

Under the procedures that existed prior to this rule, a Participant (or former Participant that is still performing an 8(a) contract) submitted its request for a waiver to the termination for convenience requirement to the Participant's (or former Participant's) SBA servicing district office. These requests for waivers are often complicated and can take a long time to be approved. Processing a waiver request can take several months in an SBA district office and then several months in SBA's Office of Business Development in SBA's Headquarters. To streamline the process, the proposed rule sought comments regarding where requests for waivers should be initiated. Specifically, SBA sought comments as to whether waiver requests should be sent directly to the AA/BD instead of to the servicing district office.

SBA received 13 comments regarding the proposed changes to § 124.515. One commenter believed there was no need to change the request for waiver process. Twelve commenters supported changing the process. The commenters supporting a change believed that streamlining the waiver process is beneficial to small businesses. Commenters noted that the process initiating at the district office level was lengthy and often dissuaded firms from initiating a waiver request. They believed that requests get bogged down in SBA for months, which can make deals fall apart. Commenters noted that disadvantaged individuals are penalized in the waiver process because it is difficult to negotiate a price for a business that will be acquired a year or more into the future. Commenters recommended that waiver requests be initiated with the AA/BD. Commenters also recommended that time limits be put into the regulation to provide that SBA will process such requests in a certain amount of time. SBA agrees that the termination for convenience waiver process was oftentimes exceedingly lengthy. In order to streamline the process, the final rule provides that waiver requests will be initiated with the AA/BD and that SBA will process a request for waiver within 90 days of receipt of a complete waiver package by the AA/BD.

SBA also received a comment questioning SBA's implementation of a waiver based on the transfer of ownership and control to another eligible Program Participant. Specifically, the commenter questioned why SBA would not grant a waiver with respect to a specific 8(a) contract if the work to be performed under the contract is not similar to the type of work previously performed by the acquiring 8(a) Participant. The commenter believed that SBA should be looking at the eligibility of the acquiring firm, as required by the statutory authority, but should not be attempting to determine the responsibility of the acquiring firm to perform the contract prior to the acquisition or question the acquiring firm's business strategy going forward. SBA agrees. The statutory authority speaks solely to requiring SBA to ensure that the acquiring firm is an eligible Participant prior to the transfer. As such, the final rule deletes the last sentence of current § 124.515(d), which restricted the transfer of 8(a) contracts to another Participant that had not previously performed work similar to that being transferred.

Sections 124.604 and 124.108

Section 124.604 currently requires each Participant owned by a Tribe, ANC, NHO or CDC to submit to SBA information showing how the Tribe, ANC, NHO or CDC has provided benefits to the Tribal or native members and/or the Tribal, native or other community due to the Tribe's/ANC's/NHO's/CDC's participation in the 8(a) BD program through one or more firms.

The proposed rule sought to add a requirement that each entity having one or more Participants in the 8(a) BD program establish a Community Benefits Plan that outlines the anticipated approach it expects to deliver to strengthen its Native or underserved community over the next three or five years. The proposed rule also sought comments regarding such a Community Benefits Plan and whether and how SBA should seek to ensure that benefits derived from the 8(a) BD program flow back to the native or disadvantaged communities served by tribes, ANCs, NHOs and CDCs. As noted above, SBA held five tribal consultations and listening sessions to hear from the Native communities. The tribal, ANC and NHO representatives overwhelmingly opposed any changes to the benefits reporting provisions. In addition, in response to the proposed rule SBA received 35 comments further opposing any changes to the benefits reporting requirements and imposing a new Community Benefits Plan requirement. One commenter, however, agreed that entities should have a Community Benefits Plan given the unique benefits available to entity-owned firms and that it makes sense that entity-owned firms should demonstrate how they are substantively improving the lives of the communities they serve. During the last tribal consultation in Washington, DC, SBA announced that it would not finalize anything new pertaining to benefits reporting. As such, this final rule does not adopt any new language to § 124.604 or any new language to § 124.108 dealing with benefits or benefits reporting.

Section 124.1002

Section 1207 of the National Defense Authorization Act for Fiscal Year 1987, Public Law 99–661 (100 Stat. 3816, 3973), authorized a set-aside program at DoD for small disadvantaged businesses, separate from the authority for contracts

awarded under the 8(a) BD program. The ''Section 1207'' or SDB Program also had a price evaluation preference and a subcontracting component. SBA implemented regulations establishing the eligibility requirements for the SDB Program and authorizing a protest and appeal process to SBA regarding the SDB status of apparent successful offerors. In 2008, the United States Court of Appeals for the Federal Circuit ruled that preferential treatment in the award of DOD prime defense contracts based on race under the Section 1207 program (as implemented in 10 U.S.C. 2323) was unconstitutional. *Rothe Dev. Corp.* v. *DOD,* 545 F.3d 1023. This effectively eliminated the SDB Program.

In response to the ruling, the FAR Council revised the SBA protest process for SDBs in the FAR to a ''review'' process in a final rule effective October 2014 (79 FR 61746). SBA brought its own regulations up to date in 2020 by removing references to an SDB protest. 85 FR 27290 (May 8, 2020). Recently, SBA's Office of Inspector General (OIG) has questioned why a protest process no longer exists to challenge a firm's SDB status. Despite SBA's explanation that the Section 1207 program (the basis for SBA's previous SDB regulatory authorities) no longer exists, OIG continues to believe that general authority to protest a firm's SDB status should exist. SBA notes that since the FAR Council replaced the protest process with a review process in 2014, SBA has not received any requests for review. Although SBA believes that such authority would not be often utilized, in response to OIG's concerns the proposed rule added a new § 124.1002 authorizing reviews and protests of SDB status in connection with prime contracts and subcontracts to a federal prime contract. The proposed rule copied similar text contained in FAR 19.305.

SBA did not receive any comments relating to § 124.1002, and SBA adopts the proposed language in this final rule. Under the rule, SBA will be able to initiate the review of the SDB status on any firm that has represented itself to be an SDB on a prime contract (for goaling purposes or otherwise) or subcontract to a federal prime contract whenever it receives credible information calling into question the SDB status of the firm. In addition, as already stated in the FAR, a contracting officer or the SBA may protest the SDB status of a proposed subcontractor or subcontract awardee. Finally, where SBA determines that a subcontractor does not qualify as an SDB, prime contractors must exclude subcontracts to that subcontractor as subcontracts to an SDB in its subcontracting reports, starting from the time that the protest was decided. SBA believes that a prime contractor should not get SDB credit for using a subcontractor that does not qualify as an SDB. However, in order not to penalize a prime contractor who acted in good faith in awarding a subcontract or to impose an additional burden of correcting past subcontracting reports, the rule disallows SDB subcontracting credit only prospectively from the point of an adverse SDB determination.

Sections 125.1, 125.3(c)(1)(i), 125.3(c)(1)(x), and 125.3(c)(2)

SBA proposed to make changes to several provisions in part 125 that reference the term commercial item. This is in response to recent changes made to the FAR with regard to the definition of ''commercial item''. 86 FR 61017. Primarily, the changes to the FAR split the definition of commercial items into two categories, commercial products and commercial services. SBA proposed to amend its regulations to adopt these changes when SBA's regulation is referring to a commercial product, a commercial service, or both. Specifically, the proposed rule amended the definition for ''cost of materials'' in 125.1 to refer only to commercial products. Further, SBA proposed to amend 125.3(c)(1)(i), (c)(1)(x), and (c)(2) to update the references to both commercial products and commercial services.

SBA received no comments in response to these proposed changes and adopts them as final in this rule.

Section 125.1

The proposed rule added definitions of the terms ''Small business concerns owned and controlled by socially and economically disadvantaged individuals'' and ''Socially and economically disadvantaged individuals'' for purposes of both SBA's subcontracting assistance program in 15 U.S.C. 637(d) and the goals described in 15 U.S.C. 644(g). The proposed rule sought to implement consistency among SBA's programs and referred to requirements set forth in part 124 for 8(a) eligibility. SBA received no comments on this proposed change and adopts it as final in this rule. SBA believes that the change will provide clarity for small disadvantaged business eligibility requirements contained in other statutes that refer to 15 U.S.C. 637(d) for their eligibility.

SBA also proposed to include blanket purchase agreements (BPAs) in the list of contracting vehicles that are covered by the definitions of consolidation and bundling. There are two kinds of BPAs: GSA's FSS BPAs covered under FAR 8.4 and BPAs established under Simplified Acquisition Procedures (*see* FAR 13.303). The proposed rule requested comments as to whether the list should apply to both types of BPAs, FSS and FAR 13.303, and whether it should apply to both BPAs established with more than one supplier and BPAs established with a single firm. Generally, a consolidated requirement is one that consolidates two or more previous requirements performed under smaller contracts into one action. A bundled requirement is a type of consolidated requirement in which multiple small-business requirements are consolidated into a single, larger requirement that is not likely suitable for award to small businesses. In most cases, because of the potential negative impact on small business contracting opportunities, the contracting agency is required to conduct a financial analysis, execute a determination that the action is necessary and justified, and in some cases notify impacted small businesses and the public, before proceeding with a bundled or consolidated requirement. The Small Business Act, 15 U.S.C. 632(j), requires agencies to avoid unnecessary bundling of ''contract requirements.'' SBA interprets the term ''contract requirements'' to include BPAs for the purposes of this statutory provision on avoiding bundling. This is similar to how SBA interprets the term ''proposed procurement'' under the Small Business Act's requirement for agencies to coordinate with procurement center representatives on prime contract opportunities.

SBA thus intended the consolidation and bundling provisions to apply to BPAs. The Government Accountability Office (GAO), however, ruled in two recent bid protests that, because SBA's regulations do not specifically address BPAs, the consolidation and bundling procedures do not apply when the resulting requirement is a BPA.

SBA routinely sees consolidation in BPAs. Bundling on a BPA has the same detrimental effect on small-business incumbents as bundling on other vehicles, such as contracts or orders. Regardless of whether the resulting requirement is a BPA, the bundled action will convert multiple small business contracting actions into a single action to be awarded to a large business. If agencies are not required to follow SBA regulations regarding notification and a written determination for bundled BPAs, the small business incumbents may not know that work that they are currently performing has been bundled and moved to a single

award to a large business and may not have the opportunity to challenge such action. Awarding a requirement as a BPA does not lessen the negative impact of bundling on small businesses, and, therefore, SBA proposes to incorporate into the regulations its current belief that the bundling and consolidation rules should apply with equal force where the resulting award will be a BPA.

SBA received ten comments regarding the change to include BPAs in the definition of bundling. All ten commenters supported the inclusion of BPAs. Commenters agreed that the consolidation and bundling requirements should not be limited to either BPAs established with more than one supplier or a single firm and should apply to both BPAs established under FAR Part 8 or Part 13 procedures. One commenter commended SBA for this change, believing that it can prevent contracts from being bundled and taken away from small business. Several commenters also recommended that SBA amend the definition of consolidation to include BPAs as well. SBA agrees that the consolidation and bundling requirements should apply to BPAs established with a more than one supplier or a single firm and to both BPAs established under FAR Part 8 or Part 13 procedures. SBA has added BPAs to both the definitions of bundling and consolidation in this final rule.

Additionally, several procuring agencies have asserted that the analysis, determination, and notification requirements for consolidation or bundling do not apply when existing requirements are combined with new requirements. SBA disagrees. There is no basis in statute, regulation, or case law for agencies to interpret ''requirement'' as excluding a combination of existing and new work. The statutory language speaks solely to the value of existing work. As long as the combined existing work is greater than $2 million, the statute defines it to be consolidation. New work is not relevant to that determination. To eliminate any confusion, the proposed rule clarified SBA's current position that agencies are required to comply with the Small Business Act and all SBA regulations regarding consolidation or bundling regardless of whether the requirement at issue combines both existing and new requirements into one larger procurement that is considered to be ''new.'' Commenters agreed that ''consolidation'' and ''bundling'' can occur regardless of whether an agency adds additional new requirements to a procurement or whether the overall requirement can be considered ''new'' due to its increase in scope, value or magnitude. SBA adopts that language in this final rule.

Section 125.2

Section 125.2 sets forth guidance as to SBA's and procuring agencies' responsibilities when providing contracting assistance to small businesses. Paragraph 125.2(d) contains guidance on how procuring agencies determine whether contract bundling and substantial bundling is necessary and justified. Specifically, § 125.2(d)(2)(ii) states that a cost or price analysis may be included to support an agency's determination of the benefits of bundling. This language combined with the language at § 125.2(d)(2)(v) is intended to mean that price analysis is always necessary, and, if the analysis results in a price reduction, the agency may use the price reduction to demonstrate benefits of the bundled approach. In order to demonstrate ''measurably substantial'' benefits as required by the Small Business Act, SBA's regulations and the FAR (benefits equivalent to 10 percent of the contract or order value where the contract or order value is $94 million or less, or benefits equivalent to 5 percent of the contract or order value or $9.4 million, whichever is greater, where the contract or order value exceeds $94 million), SBA believes that a cost or price analysis must be conducted. Some have argued that the Small Business Act does not require a cost/price analysis. They point to the language of § 15(e)(2)(B) of the Small Business Act which provides that in demonstrating ''measurably substantial benefits'' the identified benefits ''may include'' cost savings, quality improvements, reduction in acquisition cycle times, better terms and conditions, and any other benefits. 15 U.S.C. 644(e)(2)(B). However, if a cost/price analysis is not required, SBA does not believe that it is possible to demonstrate benefits equivalent to 10 percent (or 5 percent/$9.4 million) of the contract or order value—exactly what is required by SBA's regulations and the FAR. This interpretation is even clearer in paragraph 125.2(d)(2)(v), which acknowledges that an agency will perform a price analysis and describes a specific type of price comparison to include in the analysis.

In order to clarify any misperceptions, SBA proposed to clarify § 125.2(d)(2)(ii) to plainly state that an analysis comparing the cumulative total value of all separate smaller contracts with the estimated cumulative total value of the bundled procurement is required as part of the analysis of whether bundling is necessary and justified. Neither a procuring agency nor SBA can have a complete view of the small business contract dollars impacted by a bundled procurement if this price analysis is not performed. The analysis requires that an agency identify all impacted separate smaller contracts. An agency can search the Federal Procurement Data System or use the agency's own contract records to determine the complete universe of separate contracts impacted by the bundled procurement. Identification of every impacted firm is not only important for purposes of the price analysis but is also necessary to comply with the statutory and regulatory notice requirements for bundled contracts. Furthermore, if 8(a) contracts will be subsumed in the bundled procurement, an agency must know which 8(a) contracts are impacted in order to comply with the required 8(a) program release or notification requirements.

SBA received five comments on the proposal to require a cost/price comparative analysis as part of any bundling justification. Commenters first noted that bundling has a serious negative impact on small businesses because the requirements will result in diminished opportunities for many small businesses to compete for prime contracts. One commenter believed such a comparative analysis was not necessary without providing any reasons for that belief. Four commenters agreed that no bundling analysis could have real meaning without such a comparison. They believed that a procuring activity could not adequately justify any consolidation or bundling without comparing the cost/price to previously acquire the goods or services to the projected cost/price to acquire those same goods or services through the consolidated or bundled requirement and demonstrating the required savings. A commenter also noted that if services that were previously provided in-house were added to a consolidated or bundled requirement, the analysis should include a comparison of Government in-house cost to that of the projected contract cost. SBA agrees such an analysis should be performed in those circumstances. SBA adopts the proposed comparative cost/price analysis language in this final rule.

Section 125.3

Section 125.3 discusses the types of subcontracting assistance that are available to small businesses and the rules pertaining to subcontracting generally. Paragraph 125.3(a)(1)(i)(B) provides that purchases from a corporation, company, or subdivision that is an affiliate of the prime

contractor or subcontractor are not included in the subcontracting base. SBA received an inquiry as to whether this language would allow a prime contractor to count an award to a joint venture in which it is a partner as subcontracting credit. That was not SBA's intent. SBA believes that exclusion is covered in the current regulatory text, which already alludes to not counting awards to affiliates. Nevertheless, in order to clarify that a prime contractor cannot count an award to a joint venture in which it is a partner as subcontracting credit, SBA proposed to add clarifying language to that effect.

Several commenters sought revisions to the clarifying language and argued that the proposal is, in fact, a change in policy and not a clarification. One commenter asked that SBA still allow subcontracting credit for the amount performed by the small business partner in a joint venture. Another asked that ''or sales to'' be removed from the proposed language, believing that is the exact opposite of what the proposal is seeking to do. One commenter noted that SBA's proposed language does not implement its intended change to the rule, because it states, ''joint venture . . . that is an affiliate of the prime contractor.'' The commenter pointed out that a large business that is also a minority-member of a mentor-protégé joint venture is not affiliated with that joint venture due to the exclusion to affiliation afforded mentor-protégé joint ventures. As a result, SBA's proposed language would not effectuate the rule change it seeks. SBA agrees that the proposed language did not adequately capture SBA's intent and clarifies that intent in this final rule. First, the final rule separates out the treatment of joint ventures from that of affiliates. Second, SBA is not including the ''or sales to'' language in the final rule. SBA notes that, where an other-than-small contractor subcontracts to its own unpopulated joint venture, the work performed by a small-business member of that joint venture is considered a subcontract and the contractor may take subcontracting credit for that small-business work.

SBA also proposed to amend § 125.3(a)(1)(iii) to delete bank fees from the list of exclusions from the subcontracting base. SBA's current regulations provide that bank fees are excluded from the subcontracting base. This means that when a large contractor is calculating the percentage of work being subcontracted to small businesses, it does not have to factor bank fees into this calculation. This gives the contractor little incentive to work with small banks. However, there are over 900 small businesses registered in the Dynamic Small Business Search (DSBS) database under banking NAICS codes. Given the number of small banks available to do work on federal prime contracts, SBA did not believe bank fees should be excluded from the subcontracting base. SBA received several comments supporting this change. One commenter opposed this change, arguing that bank fees are often not allowable expenses. SBA's exclusions, though, do not apply broadly to all unallowable expenses, so that classification as unallowable does not, by itself, mean that bank fees should be excluded from the subcontracting plan.

In addition, SBA proposed to amend § 125.3(c)(1)(iv) to require that large businesses include indirect costs in their subcontracting plans. Currently, large businesses have the option of including or excluding indirect costs in their individual subcontracting plans. Many large businesses opt to exclude indirect costs. As a result, small businesses that provide services generally considered to be indirect costs—such as legal services, accounting services, investment banking, and asset management—are often overlooked by large contractors. SBA stated that by requiring indirect costs to be included in their individual subcontracting plans, large businesses will have an incentive to give work to small businesses that provide those services.

SBA received some supportive comments to the proposal, but comments were primarily negative. Commenters asserted that tracking, collecting, and allocating indirect costs will be overly burdensome on the businesses with subcontracting plans. They also observed that indirect costs already are included in summary subcontracting reports, but those costs are unpredictable, making it very difficult to include them in subcontracting goals. Another commenter observed that SBA's definition of ''subcontracts'' does not cover the indirect costs that SBA was most concerned with because those costs are not typically related to the work that the contractor with the plan has undertaken. The same commenter questioned whether contractors with subcontracting plans are properly recording the size of their subcontractors.

To the comment about SBA's definition of subcontract, SBA did not propose to change the present definition. Such a change would be a major change in practice, and SBA did not intend to change what types of work fall under that definition. Instead, SBA sought to have some accountability for the indirect costs that contractors currently report on their summary subcontracting plans. Based on the comments received, SBA understands including indirect costs in all subcontracting plans would result in a significant, widespread burden. Therefore, SBA is limiting the revision in three ways. First, only prime contractors would be required to include indirect costs in the individual subcontracting plans and reports; other contractors may continue to choose whether or not to continue to include them. Second, including the indirect costs would be required only for contracts valued at $7.5 million or more, which is 10 times the threshold at which a subcontracting plan is required for most contracts. Third, prime contractors may rely on a pro-rata formula to allocate indirect costs to covered individual contracts, to the extent that the indirect costs are not already allocable to specific contracts.

Section 125.6

Section 125.6 sets forth the requirements pertaining to the limitations on subcontracting applicable to prime contractors for contracts and orders set-aside or reserved for small business. Section 125.6(d) provides that the period of time used to determine compliance for a total or partial set-aside contract will generally be the base term and then each subsequent option period. This makes sense when one agency oversees and monitors a contract. However, on a multi-agency set-aside contract, where more than one agency can issue orders under the contract, no one agency can practically monitor and track compliance. In order to ensure that this statutory requirement is met for the contract, SBA believes that compliance should be measured order by order by each ordering agency. The proposed rule clarified § 125.6(d) accordingly.

SBA received five comments on the proposed clarification to § 125.6(d). Four comments, including one executive agency, supported the change, agreeing that no procuring activity is accountable where no one tracks the cumulative work ordered under a multi-agency set aside contract. These commenters wanted to ensure that small businesses (either directly or with similarly situated entities) actually performed the required percentages of work and that large businesses or non-similarly situated small businesses did not unduly benefit from small business set aside contracts. One commenter believed that the change was not needed since the rules currently permit

contracting officers from ordering agencies to require compliance with the limitations on subcontracting on an order-by-order basis. SBA believes this comment misses the point. SBA recognizes that contracting officers may require compliance with the limitations on subcontracting on an order-by-order basis. However, if they do not, there is no one agency tracking overall limitations on subcontracting compliance with the aggregate of all orders issued by multiple agencies. SBA adopts the proposed language in this final rule.

SBA also proposed to add a new § 125.6(e) to provide consequences to a small business where a contracting officer determines at the conclusion of contract performance that the business did not meet the applicable limitation on subcontracting on any set-aside contract (small business set-aside; 8(a); WOSB; HUBZone; or SDVOSB). The current rules provide discretion to contracting officers to require contractors to demonstrate compliance with the limitations on subcontracting at any time during performance and upon completion of a contract. SBA's current rules do not, however, address what happens if a contracting officer determines that a firm fails to meet the statutorily required limitation on subcontracting requirement at the conclusion of contract performance. SBA's proposed rule provided that a contracting officer could not give a satisfactory/positive past performance evaluation for the appropriate evaluation factor or subfactor to a contractor that the contracting officer determined did not meet the applicable limitation on subcontracting requirement at the conclusion of contract performance.

SBA received comments both supporting and opposing this proposal. Those supporting the proposal believed that in order to promote the integrity of small business contracting, there should be consequences for those business concerns that do not take seriously the limitations on subcontracting and make minimal, superficial efforts to meet the applicable requirement. Several commenters who opposed the proposal believed that compliance with the limitations on subcontracting is a complex calculation, that there should be a safe harbor for contractors that made good faith efforts to meet the application limitation on subcontracting, and that a contractor should be able to provide extenuating or mitigating circumstances that impacted its ability to meet the applicable requirement. SBA maintains that having negative consequences for not meeting the applicable limitation on subcontracting would help ensure the requirements are being met, and that set-aside contracts are being performed in a manner consistent with SBA's regulations and the Small Business Act. However, SBA also believes that a contractor should not be penalized for circumstances beyond its control. In extenuating circumstances, SBA supports providing discretion authorizing a contracting officer to give a satisfactory orpositive past performance evaluation for the appropriate evaluation factor or subfactor to a contractor that did not meet the applicable limitation on subcontracting requirement. SBA is concerned that a negative past performance evaluation could be repeatedly avoided in situations in which a concern continually and knowingly exceeds the limitation on subcontracting, as extenuating circumstances could be argued by such a concern in every instance where the limitation is not met under a contract or order. SBA believes there should be greater accountability for these determinations, through the use of higher-level review, to ensure that concerns that knowingly exceed the limitations experience adverse consequences.

Whenever a contracting officer determines at the conclusion of contract performance that a small business did not meet the applicable limitation on subcontracting on any set-aside contract, the final rule would first give the business concern the opportunity to explain contributing circumstances that negatively impacted its ability to do so. The final rule adds language authorizing a contracting officer to give a satisfactory orpositive past performance evaluation for the appropriate evaluation factor or subfactor to a contractor that did not meet the applicable limitation on subcontracting requirement where the contracting officer determines that the reason for noncompliance was outside of the firm's control and an individual at least one level above the contracting officer concurs with that determination. Examples of extenuating or mitigating circumstances that could lead to a satisfactory/positive rating include, but are not limited to, unforeseen labor shortages, modifications to the contract's scope of work which were requested or directed by the Government, emergency or rapid response requirements that demand immediate subcontracting actions by the prime small business concern, unexpected changes to a subcontractor's designation as a similarly situated entity (as defined in § 125.1), differing site or environmental conditions which arose during the course of performance, force majeure events, and the contractor's good faith reliance upon a similarly situated subcontractor's representation of size or relevant socioeconomic status. The contracting officer could not rely on any circumstances that were within the contractor's control, or those which could have been mitigated without imposing an undue cost or burden on the contractor. Without this discretionary authority, SBA agrees that long-term deleterious consequences could result to otherwise well-performing small business prime contractors.

Section 125.9

Section 125.9 sets forth the rules governing SBA's small business mentor-protégé program. SBA's regulations currently provide that a mentor can have no more than three protégé small business concerns at one time. SBA has been asked whether a mentor that purchases another business concern that is also an SBA-approved mentor can take on those mentor-protégé relationships if the total number of protégés would exceed three. The reason SBA has limited the number of protégé firms one mentor can have at any time is to ensure that a large business mentor does not unduly benefit from programs intended to benefit small businesses. That is also the reason that the limit of three protégés applies to the mentor family (*i.e.,* the parent and all of its subsidiaries in the aggregate cannot have more than three protégé small business concerns at one time). If each separate business entity could itself have three protégés, conceivably a parent with three subsidiaries could have 12 small business protégé firms. SBA believes that would allow a large business to unduly benefit from small business programs. The regulations implementing the mentor-protégé program also provide that a small business can have only two mentor-protégé relationships in total. Thus, if SBA were to say that a mentor that purchased another business entity which is also a mentor could not take on the selling business entity's mentor-protégé relationships, the ones who would be hurt the most would be the small business protégés of the selling business. Their mentor-protégé relationships with the selling mentor would end early and would count as one of the two mentor-protégé relationships that they were authorized to have. Because SBA did not intend to

adversely affect protégé firms in these circumstances, SBA has informally permitted a mentor to take on the mentor-protégé relationships of a firm that it purchased even where its total number of mentor-protégé relationships would exceed three. The proposed rule added language to § 125.9(b)(3)(ii) to recognize this exemption. Specifically, the proposed rule added a paragraph that where a mentor purchases another business entity that is also an SBA-approved mentor of one or more protégé small business concerns and the purchasing mentor commits to honoring the obligations under the seller's mentor-protégé agreement(s), that entity may have more than three protégés. In such a case, the entity could not add another protégé until it fell below three in total.

SBA received six comments in response to this proposed clarification. Five commenters supported the proposal and one opposed. The commenter opposing the clarification believed that the current three protégé limit is a good one. SBA generally agrees with the current provision limiting a mentor to three protégé firms at one time. However, as noted above, imposing that limit in the context of an acquisition by a firm that is a mentor could harm small business protégés. SBA believes that the exception in the context of one mentor purchasing another makes sense. SBA also believes that this is not something that will occur often, but that protection of protégé firms should be in place in those limited instances when it does. The five comments supporting the clarification cited SBA's intent to not harm protégé firms as a worthwhile objective. SBA adopts the proposed language in this final rule.

The proposed rule also amended § 125.9(e) to add language recognizing that a mentor that is a parent or subsidiary of a larger family group may identify one or more subsidiary firms that it plans to participate in the mentor-protégé arrangement by providing assistance and/or participating in joint ventures with the protégé firm. The proposed rule provided that all entities intended to participate in the mentor-protégé relationship should be identified in the mentor-protégé agreement itself.

SBA received five comments in response to this proposed change. Commenters agreed with SBA's proposal to allow mentor companies additional flexibility in assigning their subsidiaries to assist protégé small business concerns. In addition to making the terms more attractive to mentors, they believed that this change will also benefit those protégés where the mentor parent company is not specialized in the protégé's industry. One commenter was concerned with allowing a subsidiary company with no experience in a protégé's primary industry to joint venture with the protégé, limiting the role of and benefit to the protégé. SBA believes this comment misses the intent of the change. The purpose of allowing subsidiary companies of a mentor to participate in the business development of a protégé firm and to form joint ventures to seek procurement opportunities with the protégé is to broaden the protégé's experience, not limit it. In most cases, the parent mentor has experience in the primary industry of the protégé business concern. The protégé expects to joint venture with and gain experience from that parent mentor in that industry. However, if a subsidiary of the mentor has experience in a different industry in which the protégé seeks to enter, that subsidiary should be able to assist the protégé firm gain experience in that distinct industry as well. SBA adopts the proposed language in this final rule.

Finally, one commenter sought clarification as to whether a protégé could extend or renew its mentor-protégé relationship for an additional six years with the same mentor instead of ending that relationship at the end of six years and seeking a new business entity to be its mentor. SBA believes that the current regulations allow that to occur and has administratively permitted it in appropriate circumstances. The final rule adds specific language authorizing a second six-year mentor-protégé relationship with the same mentor. In order for SBA to approve a second six-year mentor-protégé relationship with the same mentor, the mentor-protégé agreement for the second six-year term must provide additional business development assistance to the protégé firm.

Sections 126.306(b), 127.304(c), and 128.302(d)

Sections 126.306 and 127.304 set forth the procedures by which SBA processes applications for the HUBZone and WOSB programs, respectively. The proposed rule added language to both processes to provide that where SBA is unable to determine a concern's compliance with any of the HUBZone or WOSB/EDWOSB eligibility requirements due to inconsistent information contained in the application, SBA will decline the concern's application. In addition, the proposed rule added language providing that if, during the processing of an application, SBA determines that an applicant has knowingly submitted false information, regardless of whether correct information would cause SBA to deny the application, and regardless of whether correct information was given to SBA in accompanying documents, SBA will deny the application. This language is consistent with that already appearing in SBA's regulations for the 8(a) BD program, and SBA believes that all of SBA's certification programs should have similar language on this issue. SBA received four comments in response to these proposed changes. All four comments supported the proposals as consistent with the 8(a) application procedures. Commenters believed all SBA certification programs should have similar provisions. The final rule adopts the proposed language with clarifying edits and also adds identical language to the provisions pertaining to VOSB and SDVOSB certification in § 128.302(d).

Sections 126.503(c), 127.405(d), and 128.310(d)

The proposed rule amended § 126.503 by adding a new paragraph (c) to specifically authorize SBA to initiate decertification proceedings if after admission to the HUBZone program SBA discovers that false information has been knowingly submitted by a certified HUBZone small business concern. SBA believes that this is currently permitted under the HUBZone regulations but proposed to add this provision to eliminate any doubt. SBA received four comments supporting this provision and no comments opposing it. As such, SBA adopts the proposed language in this final rule. SBA also adds the same language to § 127.405(d) for the WOSB program. The SDVO program has similar language contained in § 128.201(b). The final rule deletes that language from § 128.201(b) and instead adopts the identical language that was added for the HUBZone and WOSB programs to § 128.310(d) for the SDVO program. SBA believes that § 128.310(d) is a better location than § 128.201(b) since that section pertains to decertification, which is the same substantive topic as that contained in §§ 126.503(c) and 127.405(d) for the HUBZone and WOSB programs, respectively.

Section 126.601(d)

The proposed rule amended § 126.601(d) to clarify how the ostensible subcontractor rule may affect a concern's eligibility for a HUBZone contract. Where a subcontractor that is not a certified HUBZone small business will perform the primary and vital

requirements of a HUBZone contract, or where a HUBZone prime contractor is unduly reliant on one or more small businesses that are not HUBZone-certified to perform the HUBZone contract, the prime contractor would not be eligible for award of that HUBZone contract. SBA received five comments supporting this clarification and no comments opposing it. As such, SBA adopts the proposed language in this final rule.

Section 126.616(a)(1)

The proposed rule amended § 126.616(a) to clarify that a HUBZone joint venture should be registered in SAM (or successor system) and identified as a HUBZone joint venture, with the HUBZone-certified joint venture partner identified. SBA has received numerous questions from HUBZone firms and contracting officers expressing confusion about how to determine whether an entity qualifies as a HUBZone joint venture and thus is eligible to submit an offer for a HUBZone contract. Part of the confusion stems from the fact that there is no way for an entity to be designated as a HUBZone joint venture in SBA's DSBS database; this certification can only be made in SAM. In addition, the process for self-certifying as a HUBZone joint venture in SAM is apparently unclear because such certification does not appear in the same section as the other socioeconomic self-certifications. Since it is not known when these systems might be updated to clear up this confusion, SBA proposed to amend § 126.616(a) by adding a new subparagraph (a)(1) to help HUBZone firms and contracting officers understand how to determine whether an entity may be eligible to submit an offer as a HUBZone joint venture. Two commenters supported the proposed change. One of the two also requested that SBA clarify whether and if so how this applies to multiple award contracts. Section 126.616(a) provides that a certified HUBZone small business concern may enter into a joint venture agreement with one or more other small business concerns or with an SBA-approved mentor for the purpose of submitting an offer for a HUBZone contract. Thus, the provision applies whenever submitting an offer for ''a HUBZone contract.'' That is meant to apply to all HUBZone contracts, whether a single award or multiple award contract. SBA does not believe that further clarification is necessary. SBA adopts the proposed language in this final rule.

Section 126.801

The proposed rule amended § 126.801(b) to clarify the bases on which a HUBZone protest may be filed, which include: (i) the protested concern did not meet the HUBZone eligibility requirements set forth in § 126.200 at the time the concern applied for HUBZone certification or on the anniversary date of such certification; (ii) the protested joint venture does not meet the requirements set forth in § 126.616; (iii) the protested concern, as a HUBZone prime contractor, is unduly reliant on one or more small subcontractors that are not HUBZone-certified, or subcontractors that are not HUBZone-certified will perform the primary and vital requirements of the contract; and/or (iv) the protested concern, on the anniversary date of its initial HUBZone certification, failed to attempt to maintain compliance with the 35% HUBZone residence requirement. The proposed rule also amended § 126.801(d)(1), addressing timeliness for HUBZone protests.

The proposed rule added a new subparagraph (d)(1)(i) to clarify the timeliness rules for protests relating to orders or agreements that are set-aside for certified HUBZone small business concerns where the underlying multiple award contract was not itself set-aside or reserved for certified HUBZone small business concerns. Specifically, a protest challenging the HUBZone status of an apparent successful offeror for such an order or agreement will be considered timely if it is submitted within 5 business days of notification of the identity of the apparent successful offeror for the order or agreement. The proposed rule also added a new subparagraph (d)(1)(ii) to clarify that where a contracting officer requires recertification in connection with a specific order under a multiple award contract that itself was set-aside or reserved for certified HUBZone small business concerns, a protest challenging the HUBZone status of an apparent successful offeror will be considered timely if it is submitted within five business days of notification of the identity of the apparent successful offeror for the order.

SBA received four comments in response to the proposed changes to § 126.801. All four supported the proposed changes without any further comment. As such, SBA adopts the proposed language in this final rule.

126.801(e)(2) and 127.603(d)(2)

For purposes of HUBZone and WOSB/EDWOSB contracts, the HUBZone/WOSB/EDWOSB prime contractor together with any similarly situated entities must meet the applicable limitation on subcontracting (or must perform a certain portion of the contract). If a subcontractor is intended to perform primary and vital aspects of the contract, the subcontractor may be determined to be an ostensible subcontractor under proposed § 121.103(h)(3), and the prime contractor and its ostensible subcontractor would be treated as a joint venture. However, if the ostensible subcontractor qualifies independently as a small business, a size protest would not find the arrangement ineligible for any small business contract. To address that situation, the current regulations for the HUBZone program (in §§ 126.601(d) and 126.801(a)(1)) and the WOSB program (in §§ 127.504(g) and 127.602(a)) prohibit a non-similarly situated subcontractor from performing primary and vital requirements of a contract and permit a HUBZone/WOSB/EDWOSB status protest where an interested party believes that will occur. The proposed rule added a paragraph to each of the HUBZone/WOSB/EDWOSB status protest provisions to clarify that any protests relating to whether a non-similarly situated subcontractor will perform primary and vital aspects of the contract will be reviewed by the SBA Government Contracting Area Office serving the geographic area in which the principal office of the HUBZone/WOSB/EDWOSB business is located. SBA's Government Contracting Area Offices are the offices that decide size protests and render formal size determinations. They are the offices with the expertise to decide ostensible subcontractor issues. Thus, for example, if a status protest filed in connection with a WOSB contract alleges that the apparent successful offeror should not qualify as a WOSB because (1) the husband of the firm's owner actually controls the business, and (2) a non-WOSB subcontractor will perform primary and vital requirements of the contract, SBA's WOSB staff in the Office of Government Contracting will review the control issue and refer the ostensible subcontractor issue to the appropriate SBA Government Contracting Area Office. The SBA Government Contracting Area Office would determine whether the proposed subcontractor should be considered an ostensible subcontractor and send that determination to the Director of Government Contracting, who then would issue one WOSB status determination addressing both the ostensible subcontractor and control issues. The same would be true for

HUBZone status protests (except that in the HUBZone context the Director of the Office of HUBZones would issue the HUBZone status determination). To accomplish this, the proposed rule added clarifying language in § 126.801(e)(2) (for HUBZone), and § 127.603(d) (for WOSB/EDWOSB). The proposed rule also added similar language in § 125.28(e) (for SDVO status protests). The language added with respect to SDVO status has been overcome by SBA's implementation of the Veteran Small Business Certification Program. *See* 87 FR 73400 (Nov. 29, 2022). That rule authorized OHA to hear and decide protests relating to VOSB and SDVOSB status. That office will decide all issues relating to VOSB and SDVOSB status, including issues relating to the ostensible subcontractor rule. As such, there is no need to involve SBA's Government Contracting Area Offices in VOSB and SDVOSB status protests relating to the ostensible subcontractor rule. The Veteran Small Business Certification Program rule specifically recognizes OHA's authority to decide protests relating to the ostensible subcontractor rule in § 134.1003(c). Thus, the final rule adopts the proposed changes relating to the WOSB and HUBZone programs, but not those with respect to the SDVO program.

Section 127.102

SBA proposed to amend the definition of WOSB to clarify that the definition applies to any certification as to a concern's status as a WOSB, not solely to those certifications relating to a WOSB contract. SBA has received inquiries as to whether this definition applies to a firm that certifies as a WOSB for goaling purposes on an unrestricted procurement. It has always been SBA's intent to apply that definition to all instances where a concern certifies as a WOSB, and this proposed rule merely clarified that intent.

SBA received three comments on this proposed change, two of which supported the revised definition. The third commenter was opposed, but the purported opposition is based on a misunderstanding of the proposed change. The commenter mistakenly thought SBA was proposing to permit a WOSB Program participant to compete for a WOSB set-aside award even if the participant was not small for the NAICS code attached to the award; the proposed language would not affect this rule. SBA adopts the change as proposed.

Sections 127.200 and 126.200

Section 127.200 specifies the requirements a concern must meet to qualify as an EDWOSB or WOSB. To qualify as an EDWOSB, an entity must be a small business. Paragraph 127.200(a)(1) requires a concern to be a small business for its primary industry classification to qualify as an EDWOSB, while § 127.200(b)(1) merely states that a concern must be a small business to qualify as a WOSB. The proposed rule provided that the applicant must represent that it qualifies as small under the size standard corresponding to any NAICS code under which it currently conducts business activities. SBA believes that this standard makes more sense than requiring an applicant to qualify as small under the size standard corresponding to its primary industry classification. To be eligible for a specific WOSB/EDWOSB contract, a firm must qualify as small under the size standard corresponding to the NAICS code assigned to that contract. Whether a firm qualifies as small under its primary industry classification is not relevant to that determination (unless the size standard for the firm's primary industry classification is that same as that for the NAICS code assigned to the contract, but even then, the only relevant size standard is that corresponding to the NAICS code assigned to the contract). SBA believes that a firm that does not qualify as small under its primary industry classification should not be precluded from seeking and being awarded WOSB/EDWOSB contracts if it qualifies as small for those contracts. The certification process should ensure that an applicant is owned and controlled by one or more women and that it could qualify as a small business for a WOSB/EDWOSB set-aside contract.

SBA received six comments on the proposed changes to Section 127.200. All six supported bringing § 127.200(a) in line with § 127.200(b). The proposed rule also noted that SBA believes it is important to align the WOSB/EDWOSB eligibility requirements with the eligibility requirements for veteran-owned small business (VOSB) concerns and service-disabled veteran-owned small business (SDVOSB) concerns wherever possible. SBA finalized its rules pertaining to VOSB and SDVOSB certification on November 29, 2022. 87 FR 73400. In that final rule, SBA requires a VOSB/SDVOSB to be a small business concern as defined in part 121 under the size standard corresponding to any NAICS code listed in its SAM profile. *See* 13 CFR 128.200(a)(1). To ensure consistency between the WOSB and SDVOSB programs, the final rule modifies the WOSB regulations regarding size to adopt the same language as that used in the VOSB/SDVOSB regulations. Specifically, the final rule changes the requirement that a WOSB must qualify as small for the size standard corresponding to any NAICS code under which it currently conducts business activities to requiring a WOSB to be small under the size standard corresponding to any NAICS code listed in its profile in the System for Award Management (*SAM.gov*). The wording of both provisions was intended to have the same meaning. However, to avoid any confusion and to dispel any concerns that SBA intended to apply size requirements differently between the two programs, SBA adopts the SDVOSB program language in the WOSB regulations. Since all comments supported the changes to § 127.200, no other changes are being made to that section in this final rule.

Finally, one commenter recommended that the same rule should apply to initial HUBZone eligibility. In other words, the commenter recommended that an applicant to the HUBZone program should qualify as a small business concern for HUBZone certification purposes if it meets the size standard corresponding to any NAICS code listed in its *SAM.gov* profile. SBA agrees. Unlike the 8(a) BD program, the HUBZone program is not a business development program, and the focus is not on developing a business in any one particular area. It is more in line with the WOSB and SDVO programs in which SBA certifies general eligibility and a certified business concern can then submit offers and seek awards for any HUBZone contracts for which the concern qualifies as small under the size standard corresponding to the NAICS code assigned to the contract. Thus, the final rule amends § 126.200 to change initial size eligibility to be in line with the WOSB and SDVO programs. In making the change to § 126.200, SBA noticed that the same requirements contained in § 126.200 are also contained in § 126.203. This final rule removes the provisions contained in § 126.203 as duplicative and unnecessary.

Section 127.201(b)

Section 127.201 sets forth the requirements for control of a WOSB or EDWOSB. Paragraph (b) specifies that one or more women or economically disadvantaged women must unconditionally own the concern seeking WOSB or EDWOSB status. The proposed rule clarified that this requirement was not meant to preclude

a condition that can be given effect only after the death or incapacity of the woman owner. The proposed change intended to make the WOSB Program unconditional ownership requirement the same as that for eligibility for the 8(a) BD program.

SBA received four comments on § 127.201(b). All four supported SBA clarifying the unconditional ownership requirements for WOSBs and EDWOSBs. As such, SBA adopts the language as proposed.

Section 127.202(c)

Section 127.202 sets forth the requirements for control of a WOSB or EDWOSB. The current regulatory language has caused confusion as to whether a woman or economically-disadvantaged woman claiming to control a WOSB or EDWOSB can engage in employment other than that for the WOSB or EDWOSB. The current regulations provide that the woman or economically-disadvantaged woman who holds the highest officer position may not engage in outside employment that prevents her from devoting sufficient time and attention to the daily affairs of the concern to control its management and daily business operations. The regulations also provide that such individual must manage the business concern on a full-time basis and devote full-time to it during the normal working hours of business concerns in the same or similar line of business. Taken together, the two provisions allow a woman or economically-disadvantaged woman to engage in outside employment, but only if such employment occurs outside the normal working hours of business concerns in the same or similar line of business and does not prevent her from devoting sufficient time and attention to control the concern's management and daily business operations. SBA believes that this requirement is overly restrictive.

The proposed rule revised the limitations on outside activities. SBA views its role as ensuring that one or more women or economically disadvantaged women actually control the long-term planning and daily operations of the business, not ensuring that they are physically present at the business location during the normal hours of operation for similar businesses or prohibiting them from engaging in outside employment that does not affect their ability to control the business. If a woman starts a small business that she alone operates, SBA does not believe that it makes sense to conclude that she does not control the business simply because she operates it outside the normal hours of similar businesses. Whether the business can win and perform government contracts is a different question, and not one contemplated by SBA's regulations. Where a woman is the sole individual involved in operating a specific business, there is no question that she controls the business, regardless of whether the number of hours she devotes to the business aligns with those working in similar businesses, and SBA believes that such a business should be eligible to be certified by SBA as a WOSB.

SBA received ten comments on the proposed changes to the WOSB Program's limitations on outside employment. Seven supported, two opposed, and one misunderstood the change. The seven commenters in support of the change all noted that the new regulatory language would provide valuable flexibility to women small business owners. The mistaken commenter articulated opposition to the WOSB Program's current limitation on outside employment, not the proposed revision. The two commenters opposed both thought that the proposed rule was overly broad. One thought that the language requiring a managing woman to devote ''sufficient time and attention'' to the business was too ambiguous, and that SBA must define the number of hours per week, as well as when the woman manager must work at the small business concern. The second commenter recommended that SBA specifically require the woman manager to be ''involved to some extent during normal business hours.'' SBA agrees that the individual identified as the one who controls the business concern must spend some time actually managing the concern, but believes that both commenters' recommendations are unduly limiting. SBA does not believe that such control necessarily must be exercised only during normal business hours or across a specified number of hours. As noted above, where an identified woman is the only individual involved in a specific business concern and operates that business 10, 20 or any other number fewer than 40 hours per week, there is no doubt that a woman ''controls'' that business. That is what SBA is charged with determining—whether the business concern is controlled by one or more women. Determining who controls a business, including whether there is any negative control that can be exercised by one or more individuals who are not women, is a factual issue. SBA must consider all the facts presented by each applicant. Where the identified managing woman spends no time at a business that employs several people and operates 40 hours per week but claims to manage the business in her spare time, the facts would lead SBA to question her management role in that business. SBA is cognizant of ineligible individuals who may seek to gain entry into the program through the use of front companies. However, SBA firmly believes that a proper analysis of all the facts will expose those companies. Thus, although SBA understands the concerns raised by the commenters, SBA believes that the flexibility that 70% of commenters noted would be welcome and beneficial to women business owners outweighs those concerns and that moving forward with the revised requirement on outside employment will help a greater number of eligible women entrepreneurs who are juggling multiple priorities.

One commenter in opposition suggested that if SBA were going to go forward with the revision, it should change the proposed language referring to ''outside obligations'' to ''multiple professional or employment obligations.'' SBA agrees that ''[l]imitation on outside obligations'' does not capture its intent, which is to offer women small business owners flexibility in their professional pursuits. ''Limitation on outside obligations'' could potentially imply that a woman small business owner's eligibility could be affected by factors outside of the professional realm, which it cannot. Accordingly, SBA is changing the proposed language in § 127.202(c) from ''[l]imitation on outside obligations'' to read ''[l]imitation on outside employment.'' SBA adopts the rest of the proposed language as written.

In the interest of regulatory alignment and consistency, the final rule also revises § 128.203(i) in the SDVO regulations to change ''outside obligations'' to ''outside employment'' to clarify that SBA does not intend to require or consider different factors in determining whether a woman or a veteran or service-disabled veteran controls the business concern at issue.

Section 127.400

Section 127.400 describes how a concern maintains its certification as a WOSB or EDWOSB. SBA proposed to amend § 127.400 by omitting § 127.400(a), which requires a certified concern to annually represent to SBA that it meets all program eligibility requirements, and replacing it with § 127.400(b), which states that a certified concern must undergo a program examination at least every three years to maintain program

eligibility. SBA believes that these program examinations, in conjunction with other eligibility assessments like material change reviews, status protests, third-party certifier compliance reviews, and program audits, will sufficiently capture eligibility information. The proposed rule also amended the examples to § 127.400 to reflect the proposed change.

SBA received nine comments on the proposed removal of § 127.400(a). Seven supported the change, one opposed, and one discussed the details of a different proposed change. The supportive commenters noted that removing the annual attestation requirement would significantly reduce the administrative burden on small businesses. One noted that the change would bring the WOSB Program re-certification timeframe in line with other certification programs. Another agreed that SBA will be able to assess ongoing eligibility for the WOSB Program through other means. The commenter opposed to removing § 127.400(a) believed that three years is too long for a firm to operate under the assumption of eligibility. The commenter expressed concern that a firm could receive several contracts during its three-year certification period, even if its ownership changed during that period. The commenter asserted that this would be unfair to eligible WOSBs and EDWOSBs in the same industry. SBA believes that the reduced burdens on WOSBs and SBA outweigh any potential eligibility issues that could arise during a firm's three-year certification period. WOSBs will still be required to notify SBA of material changes that affect eligibility, which includes changes in ownership. SBA believes material change reviews, along with all the other program eligibility assessments, including program examinations and status protests, address the commenter's concerns that ineligible firms may get contracts that would have otherwise been awarded to eligible WOSBs and EDWOSBs in the same industry.

One commenter who supported the change also noted that SBA should remove the requirement that applicants must use third-party certifiers to re-certify. The WOSB Program regulations have never required applicants to use third-party certifiers for re-certification and this has not changed. SBA adopts the changes to § 127.400 as proposed.

Compliance With Executive Orders 12866, 12988, 13132, 13563, the Congressional Review Act (5 U.S.C. 801–808), the Paperwork Reduction Act (44 U.S.C. Ch. 35), and the Regulatory Flexibility Act (5 U.S.C. 601–612):

Executive Order 12866

The Office of Management and Budget (OMB) has determined that this rule is a significant regulatory action and, therefore, was subject to review under section 6(b) of Executive Order 12866, Regulatory Planning and Review, dated September 30, 1993. Accordingly, the next section contains SBA's Regulatory Impact Analysis.

Regulatory Impact Analysis

1. Is there a need for the regulatory action?

This action implements a statutory enactment—the NDAA FY22—as well as codifies a federal court decision into regulation, and revises SBA guidelines on 8(a) BD program eligibility, 8(a) BD program participation, and subcontracting plan compliance. With respect to the 8(a) BD program, this action is needed to clarify several policies that SBA already has put in place and to apply existing regulations to new scenarios, such as the recently amended SBA mentor-protégé program. This action also is needed to integrate section 863 of NDAA FY22 into SBA regulations and to adopt the holding of a recent federal court decision.

2. What is the baseline, and the incremental benefits and costs of this regulatory action?

SBA has determined that this rule includes eight provisions that are associated with incremental benefits or incremental costs. Outside of the following eight provisions, the other changes merely clarify existing policy, modify language to avoid confusion, or adopt interpretations already issued by SBA's Office of Hearings and Appeals or through SBA casework.

a. *Require a firm to update SAM within two days and notify certain contracting officers if the firm is found ineligible through size determination, SDVO SBC protests, HUBZone protests, or WOSB Program protests.*

SBA amends section 127.405(c) to provide that a firm found ineligible through a final WOSB program protest must update *SAM.gov* within two days with its new status and notify agencies with which it has pending offers that are affected by the status change. This requirement already exists in SBA's regulations for size protests and SDVOSB protests.

The change extends the requirement to the WOSB program. SBA has determined that this change will impose costs on the business associated with its notification of contracting agencies of the adverse decision. The number of adverse protest decisions in the WOSB programs is less than five per year. For each such protest, the ineligible business is estimated to be required to notify two agencies. The notification does not take any particular form, so SBA estimates that each notification would take 15 minutes. Thus, the total cost of this change would be 2.5 hours across all firms. At a project-manager-equivalent level, the total cost is less than $280 annually.[1]

b. *Prohibit nonmanufacturer rule waivers from specifically applying to a contract with a duration longer than five years, including options.*

SBA amends section 121.1203 to restrict the grant of individual (*i.e.,* contract-specific) nonmanufacturer rule waivers to contracts with durations of five years or less. A procuring agency may seek, and SBA may grant, a waiver for an additional five years on the same long-term contract if, after conducting market research at the end of five years, the procuring agency demonstrates that there continues to be no available small business manufacturers and that a waiver remains appropriate.

In the prior fiscal year, SBA granted 24 individual waivers for contracts that exceed five years. The estimated total value for contracts covered by these waivers was $4.6 billion.

The most probable effect of denying waivers for such contracts in the future is that the procuring agencies will choose not to set aside those contracts for small business resellers. Instead, the procuring agencies may solicit many of those contracts as full-and-open competitions. It is also possible, however, that the agencies could limit the duration of the contracts to five years in order to promote small-business opportunity through the use of a set-aside.

Of those two possibilities, the first (a full-and-open solicitation) is an economic transfer of the reseller's markup from a small business reseller to what most likely would be an other-than-small reseller. The second (limiting the contract to five years) creates possible benefits at the sixth year for newly established domestic small-business manufacturers. Under the current policy, those manufacturers

[1] From 2.5 hours saved valued at the mean wage of $55.41 for General and Operations Managers, according to the BLS General and Operations Managers (*bls.gov*) (retrieved April 12, 2022), plus 100% for benefits and overhead.

might be overlooked by the agency and its contractors (*i.e.,* resellers) because the ongoing contract does not require the contractor to purchase from a domestic small-business manufacturer.

SBA estimates that, in a quarter of the cases in which an agency would otherwise seek a waiver for a contract exceeding five years, the agencies would choose to limit the contract (and thus the effect of the waiver) to five years. This amounts to six contracts, with a total value of $1.2 billion. Assuming that these contracts are ten years in length and agencies would recompete the contracts in the five final years, the potential recompeted value is $575 million, unadjusted for inflation. However, it is unknown whether domestic small-business manufacturers would be available to supply the resellers at the point of recompetition—five years after the initial award. Thus, although this change results in potential more opportunities for small business manufacturers in years six and beyond, the benefits of the additional opportunities are not quantifiable because of lack of information about the domestic small-business manufacturing base in the future.

c. *Require information from 8(a) applicants about the terms and restrictions of a retirement account only at the request of SBA, instead of in every instance.*

SBA amends section 124.104(c)(2)(ii) to eliminate the prior requirement that 8(a) applicants must provide the terms and conditions of retirement accounts in order to have the values of those accounts excluded from the owner's net worth. Instead, SBA will require the applicant to submit documentation of a retirement account only upon SBA's request.

SBA processes approximately 600 8(a) applications from individual-owned firms per year. Based on sampling, SBA found that 70 percent of those applications disclosed retirement accounts to SBA. Thus, this regulatory change will reduce the documentation burden for about 420 8(a) applicants per year. SBA estimates the existing burden to be 20 minutes per applicant, and the benefit of the rule's cancellation of the documentation requirement therefore to be about $15,500 per year.[2]

d. *Permit 8(a) applications to go forward where the firm or its affected principals can demonstrate that federal financial obligations have been settled and discharged or forgiven by the Federal Government.*

The final rule amends § 124.108(e) to provide that an applicant will not be denied eligibility to the 8(a) program on the basis that the applicant's prior federal financial obligations have been settled and either discharged or forgiven by the Federal Government. In rare cases, SBA has denied 8(a) eligibility based on prior federal financial obligations, even though the government has discharged the obligation. SBA internal data shows that SBA rejects approximately two applications per year on this basis. SBA estimates that the average financial obligation in those cases is $10,000. Therefore, this change results in an estimated annual benefit to future 8(a) applications of $20,000, from an average of two applicants annually with obligations of $10,000 each.

e. *Delete bank fees from the list of exclusions in the subcontracting base.*

SBA amends section 125.3(a)(1)(iii) to delete bank fees from the list of costs excludable from the subcontracting base when a contractor seeks to comply with a subcontracting plan. After reviewing FDIC and Federal Reserve data, SBA estimates that the average bank fee expense per account holder is $300 per year. The number of contractors that hold a subcontracting plan is 5,500. Thus, the total amount to be added to the subcontracting base across all contractors is $1.65 million.

The benefit to small-business subcontractors of the amendment will be additional dollars subcontracted to small business. Assuming that the total level of small-business subcontracting stays consistent at 32%, contractors will spend $525,000 of the added amount with small businesses. However, 18% of economy-wide spending on banking services is spent with banks that qualify as small businesses. Assuming contractor spending approximates economy-wide spending, this equates to $297,000 of the current spending on bank fees through contractors with subcontracting plans. Thus, after subtracting the amount already spent with small-business banks, new spending with small business subcontractors will be about $228,000 annually.

The final rule poses a cost to contractors to track their spending on bank fees in order to include them in the subcontracting base. This may require updating vendor management systems. To determine a cost per contractor for this change, SBA reviewed the Paperwork Reduction Act Supporting Statement for the FAR's Subcontracting Plan forms, under OMB Control No. 9000–0007. Considering the burdens estimated in the Supporting Statement, SBA estimates that the average cost of this change will come to $100 per contractor annually. The cost therefore amounts to $550,000 across all contractors with subcontracting plans.

The total regulatory impact is therefore a net cost of $322,000 annually. The benefits accrue to small business subcontractors, whereas the cost is borne by other-than-small prime contractors with subcontracting plans.

f. *Require businesses to include indirect costs in their subcontracting plans.*

Section 125.3(c)(1)(iv) requires prime contractors with individual subcontracting plans to report indirect costs in their individual subcontracting reports (ISRs) where the contract value exceeds $7.5 million. Contractors already are required to report indirect costs in their summary subcontracting reports (SSRs). Thus, the only cost associated with the change will be the cost of allocating indirect costs to the ISRs. To determine a cost per contractor for this change, SBA reviewed the Paperwork Reduction Act Supporting Statement for the FAR's Subcontracting Plan forms, under OMB Control No. 9000–0007. Considering the burdens estimated in the Supporting Statement and responses received from public comment, SBA estimates the cost to be $100 per ISR.[3] Between FY18 and FY22, there were 8,172 contracts awarded that exceeded $7.5 million in total base-plus-options value and that required individual subcontracting plans. Those contracts were awarded to 3,126 vendors. Based on the number of vendors affected, the aggregate cost of this change amounts to $312,600 annually.

There may be a benefit to the change because agencies use the ISR to evaluate a contractor's compliance with its subcontracting plan. Thus, by including more indirect costs in the base subcontracting value, contractors will have the incentive to subcontract more to small businesses in order to meet small business goals in their subcontracting plans. This effect may be short-lived because contractors can compensate by negotiating lower subcontracting goals. Thus, SBA cannot quantify the potential benefit for this change.

g. *Require agencies to assign a negative past performance rating to a small-business contract awardee where*

[2] From 20 minutes of time saved by 420 applicants valued at the mean wage of $55.41 for General and Operations Managers, according to the BLS General and Operations Managers (*bls.gov*) (retrieved April 12, 2022), plus 100% for benefits and overhead.

[3] This number is based on results from OMB's ICR Agency Submission, dated March 15, 2022, available at *https://www.reginfo.gov/public/do/PRAViewICR?ref_nbr=202203-9000-003.*

the contracting officer determined that the small business failed to meet required limitations on subcontracting.

The final rule requires that where a contracting officer determines at the conclusion of contract performance that a small business contractor fails to satisfy the limitations on subcontracting for a particular contract and that the reason for noncompliance was outside of the firm's control, that contractor would receive a negative past-performance rating for that contract *for the appropriate factor or subfactor in accordance with FAR 42.1503.* SBA determines that this change does not have any incremental cost or incremental benefit. Agencies already are required to submit past performance ratings, and the final rule gives procuring agencies discretion to give positive evaluations where the contracting officer determines compliance to be outside the small business' control. Though a negative rating might affect a firm's ability to obtain a contract in the future, there is no way to gauge the impact on the firm's odds, and, regardless, the end result would likely be only a transfer in the contract award from the noncompliant firm to a firm without a negative past-performance rating. This change therefore does not present a net cost nor net benefit.

3. What are the alternatives to this rule?

The alternative to the final rule would be to keep SBA's processes and procedures as currently stated in the Code of Federal Regulations. However, because so much of this rule codifies practices and interpretations already in place, using the alternative would impose an information-search cost on 8(a) BD participants in particular and small business contractors in general. Many of the clarifications in this rule already have been applied at the case level but are not widely known. This rule makes those clarifications known to the public.

Additionally, this rule implements section 863 of NDAA FY22, regarding changes to *SAM.gov* after an adverse SBA status decision. There is no alternative to implementing this statutory requirement.

Summary of Costs and Cost Savings

SBA calculates $262,000 in annual aggregate benefits, and approximately $770,500 in annual aggregate costs, with many costs and benefits uncertain. SBA calculates the net annual cost of the rule to be $500,000.

Executive Order 12988

This action meets applicable standards set forth in Sections 3(a) and 3(b)(2) of Executive Order 12988, Civil Justice Reform, to minimize litigation, eliminate ambiguity, and reduce burden. The action does not have retroactive or preemptive effect.

Executive Order 13132

For the purposes of Executive Order 13132, SBA has determined that this rule will not have substantial, direct effects on the States, on the relationship between the national government and the States, or on the distribution of power and responsibilities among the various levels of government. Therefore, for the purpose of Executive Order 13132, Federalism, SBA has determined that this rule has no federalism implications warranting preparation of a federalism assessment.

Executive Order 13563

Executive Order 13563, Improving Regulation and Regulatory Review, directs agencies to, among other things: (a) afford the public a meaningful opportunity to comment through the internet on proposed regulations, with a comment period that should generally consist of not less than 60 days; (b) provide for an ''open exchange'' of information among government officials, experts, stakeholders, and the public; and (c) seek the views of those who are likely to be affected by the rulemaking, even before issuing a notice of proposed rulemaking. As far as practicable or relevant, SBA considered these requirements in developing this rule, as discussed below.

1. Did the agency use the best available techniques to quantify anticipated present and future costs when responding to Executive Order 12866 (*e.g.,* identifying changing future compliance costs that might result from technological innovation or anticipated behavioral changes)?

To the extent possible, the agency utilized the most recent data available in the Federal Procurement Data System—Next Generation, DSBS and SAM.

Public participation: Did the agency: (a) afford the public a meaningful opportunity to comment through the internet on any proposed regulation, with a comment period that should generally consist of not less than 60 days; (b) provide for an ''open exchange'' of information among government officials, experts, stakeholders, and the public; (c) provide timely online access to the rulemaking docket on *Regulations.gov*; and (d) seek the views of those who are likely to be affected by rulemaking, even before issuing a notice of proposed rulemaking?

SBA afforded a 60-day comment period to the proposed rule and posted comments on *www.regulations.gov* to allow the public to comment meaningfully on its provisions. SBA received over 650 comments from 125 commenters, with a high percentage of commenters favoring the proposed changes. SBA also discussed the proposals in the proposed rule with stakeholders at various small business on-line procurement conferences.

Flexibility: Did the agency identify and consider regulatory approaches that reduce burdens and maintain flexibility and freedom of choice for the public?

The final rule is intended to eliminate confusion in its existing regulations and reduce unnecessary burdens on small business.

Congressional Review Act (5 U.S.C. 801–808)

The Congressional Review Act, 5 U.S.C. 801 *et seq.,* as amended by the Small Business Regulatory Enforcement Fairness Act of 1996, generally provides that before a ''major rule'' may take effect, the agency promulgating the rule must submit a rule report, which includes a copy of the rule, to each House of the Congress and to the Comptroller General of the United States. SBA will submit a report containing this rule and other required information to the U.S. Senate, the U.S. House of Representatives, and the Comptroller General of the United States. A major rule cannot take effect until 60 days after it is published in the **Federal Register**. This rule is not a ''major rule'' under 5 U.S.C. 804(2).

Paperwork Reduction Act, 44 U.S.C. Ch. 35

This rule does not impose additional reporting or recordkeeping requirements under the Paperwork Reduction Act, 44 U.S.C. Chapter 35.

In 2019, SBA revised its regulations to give contracting officers discretion to request information demonstrating compliance with the limitations on subcontracting requirements. *See* 84 FR 65647 (Nov. 29, 2019). In conjunction with this revision, SBA requested an Information Collection Review by OMB (Limitations on Subcontracting Reporting, OMB Control Number 3245–0400). OMB approved the Information Collection. This final rule does not alter the contracting officer's discretion to require a contractor to demonstrate its compliance with the limitations on subcontracting at any time during

performance and upon completion of a contract. It merely provides consequences where a contracting officer, utilizing his or her discretion, determines that a contractor did not meet the applicable limitation of subcontracting requirement. The estimated number of respondents, burden hours, and costs remain the same as that identified by SBA in the previous Information Collection. As such, SBA believes this provision is covered by its existing Information Collection, Limitations on Subcontracting Reporting.

Regulatory Flexibility Act, 5 U.S.C. 601–612

The Regulatory Flexibility Act (RFA), 5 U.S.C. 601, requires administrative agencies to consider the effect of their actions on small entities, small nonprofit enterprises, and small local governments. Pursuant to the RFA, when an agency issues a rulemaking, the agency must prepare a regulatory flexibility analysis which describes the impact of the rule on small entities. However, section 605 of the RFA allows an agency to certify a rule, in lieu of preparing an analysis if the rulemaking is not expected to have a significant economic impact on a substantial number of small entities.

The RFA defines ''small entity'' to include small businesses, small organizations, and small governmental jurisdictions. This final rule involves requirements for participation in SBA's 8(a) Business Development (BD) Program. Some BD Participants are owned by Tribes, ANCs, NHOs, or CDCs. As such, the rule relates to various small entities. The number of entities affected by the rule includes all Participants in SBA's 8(a) BD program. For reference, SBA Business Opportunity Specialists assisted over 11,000 entities in 2020.

This final rule implements a statutory enactment and a federal court decision and codifies practices and interpretations already in place for Participants. In doing so, it adds reporting requirements, but these requirements relate to information collected in the normal course of business. SBA therefore expects the collection costs to be de minimis and the costs of reporting to be minimal. Moreover, the reporting requirements, such as the requirement that contractors report indirect costs in their individual subcontracting reports (ISRs), will not fall on small entities. Some of the final rule's changes, such as that to documentation for retirement plans, reduce reporting requirements for small entities that are Participants. Additionally, the final rule's clarification of practices and interpretations decreases uncertainty for Participants. Therefore, SBA does not believe the rule will have a disparate impact on small entities or will impose any additional significant costs on them. For the reasons discussed, SBA certifies that this final rule does not have a significant economic impact on a substantial number of small entities.

List of Subjects

13 CFR Part 121

Administrative practice and procedure, Government procurement, Government property, Grant programs—business, Individuals with disabilities, Loan programs—business, Small businesses.

13 CFR Part 124

Administrative practice and procedure, Government procurement, Government property, Small businesses.

13 CFR Part 125

Government contracts, Government procurement, Reporting and recordkeeping requirements, Small businesses, Technical assistance.

13 CFR Part 126

Administrative practice and procedure, Government procurement, Penalties, Reporting and recordkeeping requirements, Small businesses.

13 CFR Part 127

Government contracts, Reporting and recordkeeping requirements, Small businesses.

13 CFR Part 128

Government contracts, Government procurement, Reporting and recordkeeping requirements, Small businesses, Technical assistance, Veterans.

Accordingly, for the reasons stated in the preamble, SBA amends 13 CFR parts 121, 124, 125, 126, 127 and 128 as follows:

PART 121—SMALL BUSINESS SIZE REGULATIONS

■ 1. The authority citation for part 121 is revised to read as follows:

Authority: 15 U.S.C. 632, 634(b)(6), 636(a)(36), 662, 694a(9), and 9012.

■ 2. Amend § 121.103 by:

■ a. Revising paragraph (h) introductory text and the third sentence of Example 2 to paragraph (h) introductory text;

■ b. Redesignating paragraphs (h)(1) through (h)(4) as paragraphs (h)(2) through (h)(5), respectively;

■ c. Adding a new paragraph (h)(1);

■ d. Revising newly redesignated paragraphs (h)(3) and (h)(4); and

■ e. Adding paragraph (i).

The revisions and additions to read as follows:

§ 121.103 How does SBA determine affiliation?

* * * * *

(h) *Affiliation based on joint ventures.* A joint venture is an association of individuals and/or concerns with interests in any degree or proportion intending to engage in and carry out business ventures for joint profit over a two-year period, for which purpose they combine their efforts, property, money, skill, or knowledge, but not on a continuing or permanent basis for conducting business generally. This means that a specific joint venture generally may not be awarded contracts beyond a two-year period, starting from the date of the award of the first contract, without the partners to the joint venture being deemed affiliated for the joint venture. However, a joint venture may be issued an order under a previously awarded contract beyond the two-year period. Once a joint venture receives a contract, it may submit additional offers for a period of two years from the date of that first award. An individual joint venture may be awarded one or more contracts after that two-year period as long as it submitted an offer prior to the end of that two-year period. SBA will find joint venture partners to be affiliated, and thus will aggregate their receipts and/or employees in determining the size of the joint venture for all small business programs, where the joint venture submits an offer after two years from the date of the first award. The same two (or more) entities may create additional joint ventures, and each new joint venture may submit offers for a period of two years from the date of the first contract to the joint venture without the partners to the joint venture being deemed affiliates. At some point, however, such a longstanding inter-relationship or contractual dependence between the same joint venture partners may lead to a finding of general affiliation between and among them. SBA may also determine that the relationship between a prime contractor and its subcontractor is a joint venture pursuant to paragraph (h)(3) of this section. For purposes of this paragraph (h), contract refers to prime contracts, novations of prime contracts, and any subcontract in which the joint venture is treated as a similarly situated entity

as the term is defined in part 125 of this chapter.

* * * * *

Example 2 to paragraph (h) introductory text. * * * On March 19, year 3, XY receives its fifth contract. * * *

* * * * *

(1) *Form of joint venture.* A joint venture: must be in writing; must do business under its own name and be identified as a joint venture in the System for Award Management (SAM) for the award of a prime contract or agreement; and may be in the form of a formal or informal partnership or exist as a separate limited liability company or other separate legal entity.

(i) If a joint venture exists as a formal separate legal entity, it cannot be populated with individuals intended to perform contracts awarded to the joint venture for any contract or agreement which is set aside or reserved for small business, unless all parties to the joint venture are similarly situated as that term is defined in part 125 of this chapter (*i.e.,* the joint venture may have its own separate employees to perform administrative functions, including one or more Facility Security Officer(s), but may not have its own separate employees to perform contracts awarded to the joint venture).

(ii) A populated joint venture that is not comprised entirely of similarly situated entities will be ineligible for any contract or agreement which is set aside or reserved for small business.

(iii) In determining the size of a populated joint venture (whether one involving similarly situated entities or not), SBA will aggregate the revenues or employees of all partners to the joint venture.

* * * * *

(3) *Ostensible subcontractors.* A contractor and its ostensible subcontractor are treated as joint venturers for size determination purposes. An ostensible subcontractor is a subcontractor that is not a similarly situated entity, as that term is defined in § 125.1 of this chapter, and performs primary and vital requirements of a contract, or of an order, or is a subcontractor upon which the prime contractor is unusually reliant. As long as each concern is small under the size standard corresponding to the NAICS code assigned to the contract (or the prime contractor is small if the subcontractor is the SBA-approved mentor to the prime contractor), the arrangement will qualify as a small business.

(i) All aspects of the relationship between the prime and subcontractor are considered, including, but not limited to, the terms of the proposal (such as contract management, transfer of the subcontractor's incumbent managers, technical responsibilities, and the percentage of subcontracted work), agreements between the prime and subcontractor (such as bonding assistance or the teaming agreement), whether the subcontractor is the incumbent contractor and is ineligible to submit a proposal because it exceeds the applicable size standard for that solicitation, and whether the prime contractor relies solely on the subcontractor's experience because it lacks any relevant experience of its own. No one factor is determinative.

(ii) A prime contractor may use the experience and past performance of a subcontractor to enhance or strengthen its offer, including that of an incumbent contractor. It is only where that subcontractor will perform primary and vital requirements of a contract or order, or the prime contractor is unusually reliant on the subcontractor, that SBA will find the subcontractor to be an ostensible subcontractor.

(iii) In the case of a contract or order set-aside or reserved for small business for services, specialty trade construction or supplies, SBA will find that a small business prime contractor is performing the primary and vital requirements of the contract or order, and is not unduly reliant on one or more subcontractors that are not small businesses, where the prime contractor can demonstrate that it, together with any subcontractors that qualify as small businesses, will meet the limitations on subcontracting provisions set forth in § 125.6 of this chapter.

(iv) In a general construction contract, the primary and vital requirements of the contract are the management, supervision and oversight of the project, including coordinating the work of various subcontractors, not the actual construction work performed.

(4) *Receipts/employees attributable to joint venture partners.* For size purposes, a concern must include in its receipts its proportionate share of joint venture receipts. Proportionate receipts do not include proceeds from transactions between the concern and its joint ventures (*e.g.,* subcontracts from a joint venture entity to joint venture partners) already accounted for in the concern's tax return. In determining the number of employees, a concern must include in its total number of employees its proportionate share of individuals employed by the joint venture. For the calculation of receipts, the appropriate proportionate share is the same percentage of receipts or employees as the joint venture partner's percentage share of the work performed by the joint venture. For a populated joint venture (where work is performed by the joint venture entity itself and not by the individual joint venture partners) the appropriate share is the same percentage as the joint venture partner's percentage ownership share in the joint venture. For the calculation of employees, the appropriate share is the same percentage of employees as the joint venture partner's percentage ownership share in the joint venture, after first subtracting any joint venture employee already accounted for in one of the partner's employee counts.

* * * * *

(i) *Affiliation based on franchise and license agreements.* The restraints imposed on a franchisee or licensee by its franchise or license agreement relating to standardized quality, advertising, accounting format and other similar provisions, generally will not be considered in determining whether the franchisor or licensor is affiliated with the franchisee or licensee provided the franchisee or licensee has the right to profit from its efforts and bears the risk of loss commensurate with ownership. Affiliation may arise, however, through other means, such as common ownership, common management or excessive restrictions upon the sale of the franchise interest.

§ 121.401 [Amended]

■ 3. Amend § 121.401 by removing the words ''§§ 121.401 through 121.413'' and adding in their place the words ''§§ 121.401 through 121.412''.

■ 4. Amend § 121.404 by:

■ a. Revising paragraphs (a)(1)(i)(B), (a)(1)(ii)(B), and (a)(1)(iv);

■ b. Removing the reference to ''§ 121.103(h)(2)'' in paragraph (d) and adding in its place a reference to ''§ 121.103(h)(3)'';

■ c. Revising the first sentence in paragraph (g)(2)(i) and the second sentence in paragraph (g)(2)(iii);

■ d. Removing the reference to ''§ 121.103(h)(4)'' in paragraph (g)(5) and adding in its place a reference to ''§ 121.103(h)(3)''; and

■ e. Adding paragraph (g)(6).

The revisions and addition to read as follows:

§ 121.404 When is the size status of a business concern determined?

(a) * * *

(1) * * *

(i) * * *

(B) *Set-aside Multiple Award Contracts.* Except as set forth in § 124.503(i)(1)(iv) for sole source 8(a)

orders, for a Multiple Award Contract that is set aside or reserved for small business (*i.e.,* small business set-aside, 8(a) small business, service-disabled veteran-owned small business, HUBZone small business, or women-owned small business), if a business concern (including a joint venture) is small at the time of offer and contract-level recertification for the Multiple Award Contract, it is small for each order or Blanket Purchase Agreement issued against the contract, unless a contracting officer requests a size recertification for a specific order or Blanket Purchase Agreement.

(ii) * * *

(B) *Set-aside Multiple Award Contracts.* Except as set forth in § 124.503(i)(1)(iv) for sole source 8(a) orders, for a Multiple Award Contract that is set aside or reserved for small business (*i.e.,* small business set-aside, 8(a) small business, service-disabled veteran-owned small business, HUBZone small business, or women-owned small business), if a business concern (including a joint venture) is small at the time of offer and contract-level recertification for discrete categories on the Multiple Award Contract, it is small for each order or Agreement issued against any of those categories, unless a contracting officer requests a size recertification for a specific order or Blanket Purchase.

* * * * *

(iv) For a Multiple Award Contract, where concerns are not required to submit price as part of the offer for the contract, size for the contract will be determined as of the date of initial offer, which may not include price. Size for set-aside orders will be determined in accordance with subparagraphs (i)(A), (i)(B), (ii)(A), or (ii)(B), as appropriate.

* * * * *

(g) * * *

(2)(i) In the case of a merger, acquisition, or sale which results in a change in controlling interest under § 121.103, where contract novation is not required, the contractor must, within 30 days of the transaction becoming final, recertify its small business size status to the procuring agency, or inform the procuring agency that it is other than small. * * *

* * * * *

(iii) * * * If the merger, sale or acquisition (including agreements in principle) occurs within 180 days of the date of an offer relating to the award of a contract, order or agreement and the offeror is unable to recertify as small, it will not be eligible as a small business to receive the award of the contract, order or agreement. * * *

* * * * *

(6) Where a joint venture must recertify its small business size status under paragraph (g), the joint venture can recertify as small where all parties to the joint venture qualify as small at the time of recertification, or the protégé small business in a still active mentor-protégé joint venture qualifies as small at the time of recertification. A joint venture can recertify as small even though the date of recertification occurs more than two years after the joint venture received its first contract award (*i.e.,* recertification is not considered a new contract award under § 121.103(h)).

* * * * *

■ 5. Amend § 121.406 by revising paragraph (c) to read as follows:

§ 121.406 How does a small business concern qualify to provide manufactured products or other supply items under a small business set-aside, service-disabled veteran-owned small business, HUBZone, WOSB or EDWOSB, or 8(a) contract?

* * * * *

(c) The limitations on subcontracting (performance of work) requirements, the ostensible subcontracting rule, and the nonmanufacturer rule do not apply to small business set-aside acquisitions with an estimated value between the micro-purchase threshold and the simplified acquisition threshold (as both terms are defined in the FAR at 48 CFR 2.101).

* * * * *

■ 6. Amend § 121.411 by revising paragraph (c) to read as follows:

§ 121.411 What are the size procedures for SBA's Section 8(d) Subcontracting Program?

* * * * *

(c) Upon determination of the successful subcontract offeror for a competitive subcontract over the simplified acquisition threshold, but prior to award, the prime contractor must inform each unsuccessful subcontract offeror in writing of the name and location of the apparent successful offeror.

* * * * *

§ 121.413 [Removed]

■ 7. Remove § 121.413.

■ 8. Amend § 121.506 by redesignating paragraphs (a), (b), (c), (d), and (e), as paragraphs (b), (d), (e), (f), and (g) respectively, and adding paragraphs (a) and (c) to read as follows:

§ 121.506 What definitions are important for sales or leases of Government-owned timber?

(a) *Computation of Market Share* means the small business share, expressed as a percentage for a market area, based on the purchase by small business over the preceding 5-year period. The computation is done every five years.

* * * * *

(c) *Integrated Resource Timber Contracts* means contracts that combine product removal and service work when the value of included timber exceeds the value of services.

* * * * *

■ 9. Amend § 121.507 by adding new paragraphs (d) and (e) to read as follows:

§ 121.507 What are the size standards and other requirements for the purchase of Government-owned timber (other than Special Salvage Timber)?

* * * * *

(d) The Director of Government Contracting may waive one or more of the requirements set forth in paragraphs (a)(3) and (a)(4) of this section in limited circumstances where conditions make the requirement(s) impractical or prohibitive. A request for waiver must be made to the Director of Government Contracting and contain facts, arguments, and any appropriate supporting documentation as to why a waiver should be granted.

(e) Sawtimber volume from Integrated Resource Timber Contracts shall be included in the Computation of Market Share and set-aside trigger.

■ 10. Amend § 121.702 by:

■ a. In paragraph (c)(7), revising the first sentence and adding a new second sentence;

■ b. Adding paragraph (c)(11).

The revisions and addition to read as follows:

§ 121.702 What size and eligibility standards are applicable to the SBIR and STTR programs?

* * * * *

(c) * * *

(7) * * * A concern and its ostensible subcontractor are treated as joint venturers. As such, they are affiliates for size determination purposes and must meet the ownership and control requirements applicable to joint ventures. * * *

* * * * *

(11) *Exception to affiliation for certain investment companies.* There is an exception to affiliation for Small Business Investment Companies (SBICs) that invest in SBIR or STTR awardees,

in accordance with 13 CFR 121.103(b)(1).

* * * * *

■ 11. Amend § 121.1001 by revising paragraphs (a)(6)(i), (a)(8)(i) and (a)(9)(i), paragraph (b)(2)(ii) introductory text, and paragraphs (b)(2)(ii)(A) and (C) to read as follows:

§ 121.1001 Who may initiate a size protest or request a formal size determination?

(a) * * *

(6) * * *

(i) Any offeror for a specific HUBZone set-aside contract that the contracting officer has not eliminated from consideration for any procurement-related reason, such as non-responsiveness, technical unacceptability or outside of the competitive range;

* * * * *

(8) * * *

(i) Any offeror for a specific service-disabled veteran-owned small business set-aside contract that the contracting officer has not eliminated from consideration for any procurement-related reason, such as non-responsiveness, technical unacceptability or outside of the competitive range;

* * * * *

(9) * * *

(i) Any offeror for a specific contract set aside for WOSBs or WOSBs owned by one or more women who are economically disadvantaged (EDWOSB) that the contracting officer has not eliminated from consideration for any procurement-related reason, such as non-responsiveness, technical unacceptability or outside of the competitive range;

* * * * *

(b) * * *

(2) * * *

(ii) Concerning individual sole source and competitive 8(a) contract awards where SBA cannot verify the eligibility of the apparent successful offeror because SBA finds the concern to be other than small, the following entities may request a formal size determination:

(A) The Participant nominated for award of the particular sole source contract, or found to be ineligible for a competitive 8(a) contract due to its size;

* * * * *

(C) The SBA District Director in the district office that services the Participant, the Associate Administrator for Business Development, or the Associate General Counsel for Procurement Law.

* * * * *

■ 12. Amend § 121.1004 by revising paragraph (a)(1), adding the words ''without a reserve'' at the end of paragraph (a)(2)(iii), and adding paragraphs (f) and (g) to read as follows:

§ 121.1004 What time limits apply to size protests?

(a) * * *

(1) *Sealed bids or sales (including protests on partial set-asides and reserves of Multiple Award Contracts and set-asides of orders against Multiple Award Contracts).* (i) A protest must be received by the contracting officer prior to the close of business on the 5th day, exclusive of Saturdays, Sundays, and legal holidays, after bid opening for

(A) The contract;

(B) An order issued against a Multiple Award Contract if the contracting officer requested a new size certification in connection with that order; or

(C) Except for orders or Blanket Purchase Agreements issued under any Federal Supply Schedule contract, an order or Blanket Purchase Agreement set aside for small business (*i.e.,* small business set-aside, 8(a) small business, service-disabled veteran-owned small business, HUBZone small business, or women-owned small business) where the underlying Multiple Award Contract was awarded on an unrestricted basis.

(ii) Where the identified low bidder is determined to be ineligible for award, a protest of any other identified low bidder must be received prior to the close of business on the 5th day, exclusive of Saturdays, Sundays, and legal holidays, after the contracting officer has notified interested parties of the identity of that low bidder.

* * * * *

(f) *Apparent successful offeror.* A party with standing, as set forth in § 121.1001(a), may file a protest only against an apparent successful offeror or an offeror in line to receive an award.

(g) *Bid protest corrective action.* SBA will generally dismiss any size protest relating to an initial apparent successful offeror where an agency decides to reevaluate offers as a corrective action in response to a FAR subpart 33.1 bid protest.

(1) SBA will complete the size determination where the procuring agency makes a written request to SBA within two business days of the agency informing SBA of the corrective action and demonstrates that the corrective action will not result in a change of the apparent successful offeror, unless the protest involves size issues determined as of the date of final proposal revision per § 121.404(d).

(2) When the apparent successful offeror is announced after reevaluation, interested parties will again have the opportunity to protest the size of the new or same apparent successful offeror within five business days after such notification.

■ 13. Amend § 121.1009 by:

■ a. Revising paragraph (a)(1);

■ b. Redesignating paragraphs (a)(2) and (a)(3) as paragraphs (a)(3) and (a)(4), respectively; and adding a new paragraph (a)(2); and

■ c. Revising newly redesignated paragraph (a)(4) and paragraph (g)(5).

The revisions and additions to read as follows:

§ 121.1009 What are the procedures for making the size determination?

(a) * * *

(1) After receipt of a protest or a request for a formal size determination, if no protest is pending under FAR subpart 33.1, the SBA Area Office will issue a formal size determination within 15 business days, if possible;

(2) If a protest is pending under FAR subpart 33.1, the SBA Area Office will suspend processing a valid, timely and specific size protest. Once the procuring agency, GAO or the Court of Federal Claims issues a decision under FAR subpart 33.1, the SBA Area Office will recommence the size determination process.

(i) If the FAR subpart 33.1 decision denies the protest, SBA will issue a formal size determination within 15 business days of the decision, if possible.

(ii) If the decision results in a cancellation of the award or change of the apparent successful offeror, SBA will dismiss the size protest as moot.

(iii) If the decision requires re-evaluation of offers or other corrective action but the award is not cancelled, SBA will continue to suspend processing the protest.

(A) If after re-evaluation or other corrective action occurs the protested concern remains the apparent successful offeror, SBA will issue a formal size determination within 15 business days after notification of the apparent successful offeror, if possible.

(B) If after re-evaluation or other corrective action occurs a different apparent successful offeror is identified, SBA will dismiss the size protest as moot. Interested parties may file a timely size protest with respect to the newly identified apparent successful offeror after the notification of award.

* * * * *

(4) If SBA does not issue its determination in accordance with paragraph (a)(1) of this section (or request an extension that is granted), the

contracting officer may award the contract if he or she determines in writing that there is an immediate need to award the contract and that waiting until SBA makes its determination will be disadvantageous to the Government. Notwithstanding such a determination, the provisions of paragraph (g) of this section apply to the procurement in question.

* * * * *

(g) * * *

(5) A concern determined to be other than small under a particular size standard is ineligible for any procurement or any assistance authorized by the Small Business Act or the Small Business Investment Act of 1958 which requires the same or a lower size standard, unless SBA recertifies the concern to be small pursuant to § 121.1010 or OHA reverses the adverse size determination. After an adverse size determination, a concern cannot self-certify as small under the same or lower size standard unless it is first recertified as small by SBA. If a concern does so, it may be in violation of criminal laws, including section 16(d) of the Small Business Act, 15 U.S.C. 645(d). If the concern has already certified itself as small under the same or a smaller size standard on a pending procurement or on an application for SBA assistance, the concern must immediately inform the contracting officer or responsible official of the adverse size determination.

(i) Not later than two days after the date on which SBA issues a final size determination finding a business concern to be other than small, such concern must update its size status in the System for Award Management (or any successor system).

(ii) If a business concern fails to update its size status in the System for Award Management (or any successor system) in response to an adverse size determination, SBA will make such update within two days of the business's failure to do so.

* * * * *

■ 14. Amend § 121.1203 by redesignating paragraph (d) as paragraph (g) and by adding new paragraphs (d), (e) and (f) to read as follows:

§ 121.1203 When will a waiver of the Nonmanufacturer Rule be granted for an individual contract?

* * * * *

(d) An individual waiver applies only to the contract for which it is granted and does not apply to modifications outside the scope of the contract or other procurement actions (*e.g.,* follow-on or bridge contracts).

(e) An individual waiver in connection with a long-term contract (*i.e.,* a contract with a duration of longer than five years, including options) cannot exceed five years. A procuring agency may seek a new waiver for an additional five years if, after conducting market research, it demonstrates that there are no available small business manufacturers and that a waiver remains appropriate.

(f) For a multiple item procurement, except those described in § 121.406(d)(1), a waiver must be sought and granted for each item that the procuring agency believes no small business manufacturer or processor can reasonably be expected to offer a product meeting the specifications of the solicitation and which will bring the total value of items to be procured from small business or subject to a waiver to at least 50% of the estimated value of the contract.

(1) SBA's waiver applies only to the specific item(s) identified, not to the entire contract.

(2) The estimated aggregate value of all items manufactured by small business and those subject to a waiver must equal at least 50% of the value of the contract. A contracting officer need not seek a waiver for each item for which the procuring agency believes no small business manufacturer or processor can reasonably be expected to offer a product meeting the specifications of the solicitation.

(3) When a contracting officer seeks a waiver for an individual item, the term ''item'' can be a specific broad identifying thing (*e.g.,* all spare parts related to aircraft X), but cannot be so broad as to have no real identification (*e.g.,* all medical supplies).

* * * * *

■ 15. Amend § 121.1204 by:

■ a. Revising paragraphs (b)(1)(i) and (ii);

■ b. Adding a new sentence after the first sentence in paragraph (b)(1)(iii);

■ c. Redesignating paragraphs (b)(2) and (3) as paragraphs (b)(3) and (4), respectively and adding new paragraph (b)(2)

■ d. Revising newly redesignated paragraph (b)(4) and adding paragraph (b)(5).

The revisions and additions to read as follows:

§ 121.1204 What are the procedures for requesting and granting waivers?

* * * * *

(b) * * *

(1) * * *

(i) A definitive statement of each specific item sought to be waived and justification as to why the specific item is required;

(ii) The proposed solicitation number, NAICS code, dollar amount of the procurement, dollar amount of the item(s) for which a waiver is sought, and a brief statement of the procurement history;

(iii) * * * For a multiple item procurement, a contracting officer must determine that no small business manufacturer or processor reasonably can be expected to offer each item for which a waiver is sought. * * *

* * * * *

(2) Unless an agency has justified a brand-name acquisition, the market research conducted to support the waiver request should be tailored to attract the attention of potential small business manufacturers or processors, not resellers or distributors.

* * * * *

(4) SBA will examine the contracting officer's determination and any other information it deems necessary to make an informed decision on the individual waiver request.

(i) If SBA's research verifies that no small business manufacturers or processors exist for the item, the Director, Office of Government Contracting will grant an individual, one-time waiver.

(ii) If a small business manufacturer or processor is found for the product in question, the Director, Office of Government Contracting will deny the request.

(iii) Where an agency requests a waiver for multiple items, SBA may grant a waiver for all items requested, deny a waiver for all items requested, or grant a waiver for some but not all of the items requested. SBA's determination will specifically identify the items for which a waiver is granted, and the procuring agency must then identify the specific items for which the waiver applies in its solicitation.

(iv) The Director, Office of Government Contracting's decision to grant or deny a waiver request represents the final agency decision by SBA.

(5) A nonmanufacturer rule waiver for a specific solicitation expires one year after SBA's determination to grant the waiver. This means that contract award must occur within one year of the date SBA granted the waiver. Where a contract is not awarded within one year, the procuring agency must come back to SBA with revised market research requesting that the waiver (or waivers in the case of a multiple item procurement) be extended.

§ 121.1205 [Amended]

■ 16. Amend § 121.1205 by removing ''*http://www.sba.gov/aboutsba/sbaprograms/gc/programs/gc_waivers_nonmanufacturer.html*'' and adding in its place ''*https://www.sba.gov/document/support-non-manufacturer-rule-class-waiver-list*''.

PART 124—8(a) BUSINESS DEVELOPMENT/SMALL DISADVANTAGED BUSINESS STATUS DETERMINATIONS

■ 17. The authority citation for part 124 continues to read as follows:

Authority: 15 U.S.C. 634(b)(6), 636(j), 637(a), 637(d), 644, 42 U.S.C. 9815; and Pub. L. 99–661, 100 Stat. 3816; Sec. 1207, Pub. L. 100–656, 102 Stat. 3853; Pub. L. 101–37, 103 Stat. 70; Pub. L. 101–574, 104 Stat. 2814; Sec. 8021, Pub. L. 108–87, 117 Stat. 1054; and Sec. 330, Pub. L. 116–260.

■ 18. Amend § 124.3 by revising the definition of ''Bona fide place of business'' to read as follows:

§ 124.3 What definitions are important in the 8(a) BD program?

* * * * *

Bona fide place of business, for purposes of 8(a) construction procurements, means a location where a Participant regularly maintains an office within the appropriate geographical boundary which employs at least one individual who works at least 20 hours per week at that location. The term does not include construction trailers or other temporary construction sites.

* * * * *

■ 19. Amend § 124.102 by revising paragraph (c) to read as follows:

§ 124.102 What size business is eligible to participate in the 8(a) BD program?

* * * * *

(c) A concern whose application is denied due to size by SBA may request a formal size determination with the SBA Government Contracting Area Office serving the geographic area in which the principal office of the business is located under part 121 of this chapter. Where the SBA Government Contracting Area Office determines that an applicant qualifies as a small business concern for the size standard corresponding to its primary NAICS code:

(1) The AA/BD will certify the concern as eligible to participate in the 8(a) BD program if size was the only reason for decline; or

(2) The concern may reapply for participation in the 8(a) BD program at any point after 90 days from the AA/BD's decline if size was not the only reason for decline. In such a case, the AA/BD will accept the size determination as conclusive of the concern's small business status, provided the applicant concern has not completed an additional fiscal year in the intervening period and SBA believes that the additional fiscal year changes the applicant's size.

§ 124.103 [Amended]

■ 20. Amend § 124.103 by removing the words ''physical handicap'' in paragraph (c)(2)(i) and adding in their place the words ''identifiable disability''.

■ 21. Amend § 124.104 by:

■ a. Revising the second sentence of paragraph (c)(2)(ii);

■ b. Removing paragraph (c)(2)(iii); and

■ c. Redesignating paragraph (c)(2)(iv) as paragraph (c)(2)(iii).

The revision to read as follows:

§ 124.104 Who is economically disadvantaged?

* * * * *

(c) * * *

(2) * * *

(ii) * * * In order to properly assess whether funds invested in a retirement account may be excluded from an individual's net worth, SBA may require the individual to provide information about the terms and restrictions of the account to SBA and certify that the retirement account is legitimate.

* * * * *

■ 22. Amend § 124.105 by revising paragraphs (h)(2) and (i)(1), and adding a new sentence after the first sentence in paragraph (i)(2) to read as follows:

§ 124.105 What does it mean to be unconditionally owned by one or more disadvantaged individuals?

* * * * *

(h) * * *

(2) A non-Participant concern in the same or similar line of business or a principal of such concern may generally not own more than a 10 percent interest in a Participant that is in the developmental stage or more than a 20 percent interest in a Participant in the transitional stage of the program, except that:

(i) A former Participant in the same or similar line of business or a principal of such a former Participant (except those that have been terminated from 8(a) BD program participation pursuant to §§ 124.303 and 124.304) may have an equity ownership interest of up to 20 percent in a current Participant in the developmental stage of the program or up to 30 percent in a transitional stage Participant; and

(ii) A business concern approved by SBA to be a mentor pursuant to § 125.9 of this chapter may own up to 40 percent of its 8(a) Participant protégé as set forth in § 125.9(d)(2) of this chapter, whether or not that concern is in the same or similar line of business as the Participant.

(i) * * *

(1) Any Participant or former Participant that is performing one or more 8(a) contracts may substitute one disadvantaged individual or entity for another disadvantaged individual or entity without requiring the termination of those contracts or a request for waiver under § 124.515, as long as it receives SBA's approval prior to the change.

(2) * * * In determining whether a non-disadvantaged individual involved in a change of ownership has more than a 20 percent interest in the concern, SBA will aggregate the interests of all immediate family members as set forth in § 124.3, as well as any individuals who are affiliated based on an identity of interest under § 121.103(f). * * *

* * * * *

■ 23. Amend § 124.107 by revising the introductory text to read as follows:

§ 124.107 What is potential for success?

SBA must determine that with contract, financial, technical, and management support from the 8(a) BD program, the applicant concern is able to perform 8(a) contracts and possess reasonable prospects for success in competing in the private sector. To do so, the applicant concern must show that it has operated and received contracts (either in the private sector, at the state or local government level, or with the Federal Government) in its primary industry classification for at least two full years immediately prior to the date of its 8(a) BD application, unless a waiver for this requirement is granted pursuant to paragraph (b) of this section.

* * * * *

■ 24. Amend § 124.108 by adding a new sentence at the end of paragraph (e) to read as follows:

§ 124.108 What other eligibility requirements apply for individuals or businesses?

* * * * *

(e) * * * However, a firm will not be ineligible to participate in the 8(a) BD program if the firm or the affected principals can demonstrate that the financial obligations owed have been settled and discharged/forgiven by the Federal Government.

■ 25. Amend § 124.109 by revising the second sentence of paragraph (c)(1) and by revising paragraph (c)(6)(i) to read as follows:

§ 124.109 Do Indian tribes and Alaska Native Corporations have any special rules for applying to and remaining eligible for the 8(a) BD program?

* * * * *

(c) * * *

(1) * * * Where an applicant or participating concern is owned by a federally recognized tribe, the concern's articles of incorporation, partnership agreement, limited liability company articles of organization, or other similar incorporating documents for tribally incorporated applicants must contain express sovereign immunity waiver language, or a ''sue and be sued'' clause which designates United States Federal Courts to be among the courts of competent jurisdiction for all matters relating to SBA's programs including, but not limited to, 8(a) BD program participation, loans, and contract performance. * * *

* * * * *

(6) * * *

(i) It has been in business for at least two years, as evidenced by income tax returns (individual or consolidated) or financial statements (either audited, reviewed or in-house as set-forth in § 124.602) for each of the two previous tax years showing operating revenues in the primary industry in which the applicant seeks 8(a) BD certification; or

* * * * *

■ 26. Amend § 124.110 by adding paragraph (d)(3), by redesignating paragraphs (e) through (h) as paragraphs (f) through (i), respectively, and by adding a new paragraph (e) to read as follows:

§ 124.110 Do Native Hawaiian Organizations (NHOs) have any special rules for applying to and remaining eligible for the 8(a) BD program?

* * * * *

(d) * * *

(3) The individuals responsible for the management and daily operations of an NHO-owned concern cannot manage more than two Program Participants at the same time.

(i) An individual's officer position or membership on the board of directors does not necessarily imply that the individual is responsible for the management and daily operations of a given concern. SBA looks beyond these corporate formalities and examines the totality of the information submitted by the applicant to determine which individual(s) manage the actual day-to-day operations of the applicant concern.

(ii) NHO officers and/or board members may control a holding company overseeing several NHO-owned business concerns, provided they do not actually control the day-to-day management of more than two current 8(a) BD Program Participant firms.

(iii) Because an individual may be responsible for the management and daily business operations of two NHO-owned concerns, the full-time devotion requirement does not apply to NHO-owned applicants and Participants.

(e) For corporate entities, an NHO must unconditionally own at least 51 percent of the voting stock and at least 51 percent of the aggregate of all classes of stock. For non-corporate entities, an NHO must unconditionally own at least a 51 percent interest.

* * * * *

§ 124.111 [Amended]

■ 27. In § 124.111 amend paragraph (d) by removing the words ''SIC code'' and adding in their place the words ''NAICS code.''

■ 28. Amend § 124.204 by revising paragraph (a) to read as follows:

§ 124.204 How does SBA process applications for 8(a) BD program admission?

(a) The AA/BD is authorized to approve or decline applications for admission to the 8(a) BD program.

(1) Except as set forth in paragraph (a)(2) of this section, the DPCE will receive, review and evaluate all 8(a) BD applications.

(2) Where an applicant answers on its electronic application that it is not a for-profit business (*see* §§ 121.105 and 124.104), that one or more of the individuals upon whom eligibility is based is not a United States citizen (*see* § 124.104), that the applicant or one or more of the individuals upon whom eligibility is based has previously participated in the 8(a) BD program (*see* § 124.108(b)), or that the applicant is not an entity-owned business and has generated no revenues (*see* §§ 124.107(a) and 124.107(b)(1)(iv)), its application will be closed automatically and it will be prevented from completing a full electronic application.

(3) SBA will advise each program applicant within 15 days after the receipt of an application whether the application is complete and suitable for evaluation and, if not, what additional information or clarification is required to complete the application.

(4) SBA will process an application for 8(a) BD program participation within 90 days of receipt of an application package deemed complete by the DPCE. Incomplete packages will not be processed. Where during its screening or review SBA requests clarifying, revised or other information from the applicant, SBA's processing time for the application will be suspended pending the receipt of such information.

* * * * *

§ 124.302 [Amended]

■ 29. Amend § 124.302 by removing paragraph (b), and redesignating paragraphs (c) and (d) as paragraphs (b) and (c), respectively.

§ 124.303 [Amended]

■ 30. In § 124.303 amend paragraph (a)(15) by removing the reference to ''§ 124.507'' and adding in its place a reference to ''§ 124.509.''

■ 31. Amend § 124.304 by:

■ a. revising paragraph (b); and

■ b. In paragraph (f)(3) removing the reference to ''§ 124.1010'' and adding in its place a reference to ''§ 124.1002''.

The revision reads follows:

§ 124.304 What are the procedures for early graduation and termination?

* * * * *

(b) *Letter of Intent to Terminate or Graduate Early.* (1) Except as set forth in paragraph (b)(2) of this section, when SBA believes that a Participant should be terminated or graduated prior to the expiration of its program term, SBA will notify the concern in writing. The Letter of Intent to Terminate or Graduate Early will set forth the specific facts and reasons for SBA's findings and will notify the concern that it has 30 days from the date it receives the letter to submit a written response to SBA explaining why the proposed ground(s) should not justify termination or early graduation.

(2) Where SBA obtains evidence that a Participant has ceased its operations, the AA/BD may immediately terminate a concern's participation in the 8(a) BD program by notifying the concern of its termination and right to appeal that decision to OHA.

* * * * *

■ 32. Amend § 124.402 by adding a sentence at the end of paragraph (b) to read as follows:

§ 124.402 How does a Participant develop a business plan?

* * * * *

(b) * * * Where a sole source 8(a) requirement is offered to SBA on behalf of a Participant or a Participant is the apparent successful offeror for a competitive 8(a) requirement and SBA has not yet approved the Participant's business plan, SBA will approve the Participant's business plan as part of its eligibility determination prior to contract award.

* * * * *

■ 33. Amend § 124.403 by

■ a. In paragraph (a) adding two new sentences after the first sentence; and
■ b. In paragraph (c)(1) removing the reference to ''§ 124.507'' and adding in its place a reference to ''§ 124.509''.

The additions read as follows:

§ 124.403 How is a business plan updated and modified?

(a) * * * If there are no changes in a Participant's business plan, the Participant need not resubmit its business plan. A Participant must submit a new or modified business plan only if its business plan has changed from the previous year. * * *

* * * * *

■ 34. Amend § 124.501 by:
■ a. Revising paragraph (b);
■ b. Revising paragraph (g) introductory text;
■ c. Revising the first sentence of paragraph (h);
■ d. Revising paragraph (k) introductory text;
■ e. Redesignating paragraphs (k)(4) and (5) as paragraphs (k)(7) and (8), respectively; and
■ f. Adding new paragraphs (k)(4), (k)(5), (k)(6), and (k)(9).

The revisions and additions to read as follows:

§ 124.501 What general provisions apply to the award of 8(a) contracts?

* * * * *

(b) 8(a) contracts may either be sole source awards or awards won through competition with other Participants. In addition, for multiple award contracts not set aside for the 8(a) BD program, a procuring agency may award an 8(a) sole source order or set aside one or more specific orders to be competed only among eligible 8(a) Participants. Such an order may be awarded as an 8(a) award where the order was offered to and accepted by SBA as an 8(a) award and the order specifies that the performance of work and/or non-manufacturer rule requirements apply as appropriate. A procuring activity cannot restrict an 8(a) competition (for either a contract or order) to require SBA socioeconomic certifications other than 8(a) certification (*i.e.,* a competition cannot be limited only to business concerns that are both 8(a) and HUBZone, 8(a) and WOSB, or 8(a) and SDVO) or give evaluation preferences to firms having one or more other certifications.

* * * * *

(g) Before a Participant may be awarded either a sole source or competitive 8(a) contract, SBA must determine that the Participant is eligible for award. SBA will determine eligibility at the time of its acceptance of the underlying requirement into the 8(a) BD program for a sole source 8(a) contract, and after the apparent successful offeror is identified for a competitive 8(a) contract. Where a joint venture is the apparent successful offeror in connection with a competitive 8(a) procurement or is offered a sole source order under a previously competitively awarded 8(a) multiple award contract, SBA will determine whether the 8(a) partner to the joint venture is eligible for award, but will not review the joint venture agreement to determine compliance with § 124.513 (*see* § 124.513(e)(1)). In any case in which an 8(a) Participant is determined to be ineligible, SBA will notify the 8(a) Participant of that determination. Eligibility is based on 8(a) BD program criteria, including whether the 8(a) Participant:

* * * * *

(h) For a sole source 8(a) procurement, a concern must be a current Participant in the 8(a) BD program at the time of award and must qualify as small for the size standard corresponding to the NAICS code assigned to the contract or order on the date the contract or order is offered to the 8(a) BD program. * * *

* * * * *

(k) In order to be awarded a sole source or competitive 8(a) construction contract, a Participant must have a bona fide place of business within the applicable geographic location determined by SBA. This will generally be the geographic area serviced by the SBA district office, a Metropolitan Statistical Area (MSA), a contiguous county (whether in the same or different state), or the geographical area serviced by a contiguous SBA district office to where the work will be performed. A Participant with a bona fide place of business within a state will be deemed eligible for a construction contract anywhere in that state (even if that state is serviced by more than one SBA district office). SBA may also determine that a Participant with a bona fide place of business in the geographic area served by one of several SBA district offices or another nearby area is eligible for the award of an 8(a) construction contract.

* * * * *

(4) If a Participant is currently performing a contract in a specific state, it qualifies as having a bona fide place of business in that state for one or more additional contracts. The Participant may not use contract performance in one state to allow it to be eligible for an 8(a) contract in a contiguous state unless it officially establishes a bona fide place of business in the location in which it is currently performing a contract, in the contiguous state or in a location in another state in which the geographical area serviced by the SBA district office is contiguous to the district office in the state where the work will be performed.

(5) A Participant may establish a bona fide place of business through a full-time employee in a home office.

(6) An individual designated as the full-time employee of the Participant seeking to establish a bona fide place of business in a specific geographic location need not be a resident of the state where he/she is conducting business.

* * * * *

(9) For an 8(a) construction contract requiring work in multiple locations, a Participant is eligible if:

(i) For a single award contract, the Participant has a bona fide place of business where a majority of the work (as identified by the dollar value of the work) is anticipated to be performed; and

(ii) For a multiple award contract, the Participant has a bona fide place of business in any location where work is to be performed.

■ 35. Amend § 124.502 by revising paragraph (a) to read as follows:

§ 124.502 How does an agency offer a procurement to SBA for award through the 8(a) BD program?

(a) A procuring activity contracting officer indicates his or her formal intent to award a procurement requirement as an 8(a) contract by submitting a written offering letter to SBA.

(1) Except as set forth in § 124.503(a)(4)(ii) and § 124.503(i)(1)(ii), a procuring activity contracting officer must submit an offering letter for each intended 8(a) procurement, including follow-on 8(a) contracts, competitive 8(a) orders issued under non-8(a) multiple award contracts, and sole source 8(a) orders issued under 8(a) multiple award contracts.

(2) The procuring activity may transmit the offering letter to SBA by electronic mail, if available, or by facsimile transmission, as well as by mail or commercial delivery service.

* * * * *

■ 36. Amend § 124.503 by:
■ a. Revising paragraph (a) introductory text, paragraphs (a)(4)(ii) and (a)(5);
■ b. Adding two sentences at the end of paragraph (i)(1)(ii); and
■ c. Revising paragraphs (i)(1)(iv) and (i)(2)(ii).

The revisions and additions to read as follows:

§ 124.503 How does SBA accept a procurement for award through the 8(a) BD program?

(a) Acceptance of the requirement. Upon receipt of the procuring activity's offer of a procurement requirement, SBA will determine whether it will accept the requirement for the 8(a) BD program. SBA's decision whether to accept the requirement will be sent to the procuring activity in writing within 10 business days of receipt of the written offering letter if the contract is valued at more than the simplified acquisition threshold, and within two business days of receipt of the offering letter if the contract is valued at or below the simplified acquisition threshold, unless SBA requests, and the procuring activity grants, an extension. SBA and the procuring activity may agree to a shorter timeframe for SBA's review under a Partnership Agreement delegating 8(a) contract execution functions to the agency. SBA is not required to accept any particular procurement offered to the 8(a) BD program.

* * * * *

(4) * * *

(ii) Where SBA has delegated its 8(a) contract execution functions to an agency through a signed Partnership Agreement, SBA may authorize the procuring activity to award an 8(a) contract below the simplified acquisition threshold without requiring an offer and acceptance of the requirement for the 8(a) BD program. However, the procuring activity must request SBA to determine the eligibility of the intended awardee prior to award. SBA shall review the 8(a) Participant's eligibility and issue an eligibility determination within two business days after a request from the procuring activity. If SBA does not respond within this timeframe, the procuring activity may assume the 8(a) Participant is eligible and proceed with award. The procuring activity shall provide a copy of the executed contract to the SBA servicing district office within fifteen business days of award.

(5) Where SBA does not respond to an offering letter within the normal 10 business-day time period, the procuring activity may seek SBA's acceptance through the AA/BD. The procuring activity may assume that SBA accepts its offer for the 8(a) program if it does not receive a reply from the AA/BD within 5 business days of his or her receipt of the procuring activity request.

* * * * *

(i) * * *

(1) * * *

(ii) * * * However, where the order includes work that was previously performed through another 8(a) contract, the procuring agency must notify and consult with SBA prior to issuing the order that it intends to procure such specified work through an order under an 8(a) Multiple Award Contract. Consultation with SBA does not require SBA concurrence or approval. Where that work is critical to the business development of a current Participant that previously performed the work through another 8(a) contract and that Participant is not a contract holder of the 8(a) Multiple Award Contract, SBA may request that the procuring agency fulfill the requirement through a competition available to all 8(a) BD Program Participants. SBA will provide any feedback in response to the procuring agency's notification within 10 business days.

* * * * *

(iv) An agency may issue a sole source award against a Multiple Award Contract that has been set aside exclusively for 8(a) Program Participants, partially set-aside for 8(a) BD Program Participants or reserved solely for 8(a) Program Participants if the required dollar thresholds for sole source awards are met. Where an agency seeks to award an order on a sole source basis (*i.e.,* to one particular 8(a) contract holder without competition among all 8(a) contract holders), the agency must offer, and SBA must accept, the order into the 8(a) program on behalf of the identified 8(a) contract holder.

(A) To be eligible for the award of a sole source order, a concern must be a current Participant in the 8(a) BD program at the time of award of the order, qualify as small for the size standard corresponding to the NAICS code assigned to the order on the date the order is offered to the 8(a) BD program, and be in compliance with any applicable competitive business mix target established or remedial measure imposed by § 124.509. Where the intended sole source recipient is a joint venture, the 8(a) managing partner to the joint venture is the concern whose eligibility is considered.

(B) Where an agency seeks to issue a sole source order to a joint venture, the two-year restriction for joint venture awards set forth in § 121.103(h) does not apply and SBA will not review and approve the joint venture agreement as set forth in § 124.513(e)(1).

(2) * * *

(ii) The order must be either an 8(a) sole source award or be competed exclusively among only the 8(a) awardees of the underlying multiple award contract. Where an agency seeks to issue an 8(a) competitive order under a multiple award contract that was awarded under full and open competition or as a small business set-aside, all eligible 8(a) BD Participants who are contract holders of the underlying multiple award contract must have the opportunity to compete for the order. Where an agency seeks to issue an 8(a) competitive order under the Federal Supply Schedule, an agency can utilize the procedures set forth in FAR subpart 8.4 (48 CFR part 8, subpart 8.4) to award to an eligible 8(a) BD Participant. Where an agency seeks to issue an 8(a) sole source order under a multiple award contract that was awarded under full and open competition or as a small business set-aside, the identified 8(a) Participant that is a contract holder of the underlying multiple award contract must be an eligible Participant on the date of the issuance of the order

* * * * *

■ 37. Amend § 124.504 by:

■ a. In paragraph (d)(1) introductory text:

■ i. Revising the second sentence;

■ ii. Adding a sentence between the second and third sentences; and

■ c. In the fourth sentence, removing the word ''notify'' adding in its place ''coordinate with''; and

■ d. Revising paragraph (d)(3).

The addition and revisions read as follows:

§ 124.504 What circumstances limit SBA's ability to accept a procurement for award as an 8(a) contract, and when can a requirement be released from the 8(a) BD program?

* * * * *

(d) * * *

(1) * * * Where a procurement will contain work currently performed under one or more 8(a) contracts, and the procuring agency determines that the procurement should not be considered a follow-on requirement to the 8(a) contract(s), the procuring agency must coordinate with the SBA District Office servicing the 8(a) incumbent firm and the SBA Procurement Center Representative assigned to the contracting activity initiating a non-8(a) procurement action that it intends to procure such specified work outside the 8(a) BD program through a requirement that it considers to be new. Such notification must identify the scope and dollar value of any work previously performed through another 8(a) contract and the scope and dollar value of the contract determined to be new. * * *

* * * * *

(3) SBA may release a requirement under this paragraph only where the procuring activity agrees to procure the

requirement as a small business, HUBZone, SDVO small business, or WOSB set-aside or otherwise identifies a procurement strategy that would emphasize or target small business participation.

* * * * *

■ 38. Amend § 124.506 by revising paragraph (b)(3) and by adding two sentences at the end of paragraph (d) to read as follows:

§ 124.506 At what dollar threshold must an 8(a) procurement be competed among eligible Participants?

* * * * *

(b) * * *

(3) There is no requirement that a procurement must be competed whenever possible before it can be accepted on a sole source basis for a tribally-owned or ANC-owned concern, or a concern owned by an NHO for DoD contracts. However, a current procurement requirement may not be removed from competition and awarded to a tribally-owned, ANC-owned or NHO-owned concern on a sole source basis (*i.e.,* a procuring agency may not evidence its intent to fulfill a requirement as a competitive 8(a) procurement, through the issuance of a competitive 8(a) solicitation or otherwise, cancel the solicitation or change its public intent, and then procure the requirement as a sole source 8(a) procurement to an entity-owned Participant). A follow-on requirement to one that was previously awarded as a competitive 8(a) procurement may be offered, accepted and awarded on a sole source basis to a tribally-owned or ANC-owned concern, or a concern owned by an NHO for DoD contracts.

* * * * *

(d) * * * The AA/BD may also accept a requirement that exceeds the applicable competitive threshold amount for a sole source 8(a) award if he or she determines that a FAR exception (48 CFR 6.302) to full and open competition exists (*e.g.,* unusual and compelling urgency). An agency may not award an 8(a) sole source contract under this paragraph for an amount exceeding $25,000,000, or $100,000,000 for an agency of the Department of Defense, unless the contracting officer justifies the use of a sole source contract in writing and has obtained the necessary approval under FAR § 19.808–1 or DFAR § 219.808–1(a).

■ 39. Amend § 124.509 by revising paragraph (c)(1) and adding paragraphs (d)(1)(i) and (ii) to read as follows:

§ 124.509 What are non-8(a) business activity targets?

* * * * *

(c) * * *

(1) As part of its annual review after being admitted to the 8(a) BD program, a Participant must provide to SBA within 30 days from the end of its program year:

(i) Annual financial statements with a breakdown of 8(a) and non-8(a) revenue in accord with § 124.602;

(ii) An annual report of all non-8(a) contracts, options, and modifications affecting price executed during the program year; and

(ii) An estimate of 8(a) and non-8(a) revenue derived during the program year, which may be obtained from monthly, quarterly or semi-annual interim financial statements or otherwise.

* * * * *

(d) * * *

(1) * * *

(i) SBA will determine whether the Participant made good faith efforts to attain the targeted non-8(a) revenues during the just completed program year. A Participant may establish that it made good faith efforts by demonstrating to SBA that:

(A) It submitted offers for one or more non-8(a) procurements which, if awarded to the Participant during its just completed program year, would have given the Participant sufficient revenues to achieve the applicable non-8(a) business activity target during that same program year. In such a case, the Participant must provide copies of offers submitted in response to solicitations and documentary evidence of its projected revenues under these missed contract opportunities; or

(B) Individual extenuating circumstances adversely impacted its efforts to obtain non-8(a) revenues, including but not limited to a reduction in government funding, continuing resolutions and budget uncertainties, increased competition driving prices down, or having one or more prime contractors award less work to the Participant than originally contemplated.

Where available, supporting information and documentation must be included to show how such extenuating circumstances specifically prevented the Participant from attaining its targeted non-8(a) revenues during the just completed program year.

(ii) The Participant bears the burden of establishing that it made good faith efforts to meet its non-8(a) business activity target. SBA's determination as to whether a Participant made good faith efforts is final and no appeal may be taken with respect to that decision.

* * * * *

■ 40. Amend § 124.513 by adding paragraphs (a)(3) and (4) to read as follows:

§ 124.513 Under what circumstances can a joint venture be awarded an 8(a) contract?

(a) * * *

(3) As long as a joint venture qualifies as small under the size standard corresponding to the NAICS code assigned to a specific contract or order (*see* § 124.513(b)), it will be eligible for award based on the status of its 8(a) managing venturer.

(4) A Program Participant cannot be a joint venture partner on more than one joint venture that submits an offer for a specific 8(a) contract or for an 8(a) order under a multiple award contract that is not itself an 8(a) contract.

* * * * *

■ 41. Amend § 124.515 by revising paragraphs (a)(1) and (c) and removing the last sentence of paragraph (d) to read as follows:

§ 124.515 Can a Participant change its ownership or control and continue to perform an 8(a) contract, and can it transfer performance to another firm?

(a) * * *

(1) An 8(a) contract or order, whether in the base or an option year, must be terminated for the convenience of the Government if one or more of the individuals upon whom eligibility for the 8(a) BD program was based relinquishes or enters into any agreement to relinquish ownership or control of the Participant such that the Participant would no longer be controlled or at least 51% owned by disadvantaged individuals.

* * * * *

(c) The 8(a) contractor must request a waiver in writing prior to the change of ownership and control except in the case of death or incapacity. A request for waiver due to incapacity or death must be submitted within 60 calendar days after such occurrence.

(1) A request for a waiver to the termination for convenience requirement must be sent to the AA/BD.

(2) The Participant seeking to change ownership or control must specify the grounds upon which it requests a waiver and must demonstrate that the proposed transaction would meet such grounds.

(3) If a Participant seeks a waiver based on the impairment of the agency's objectives under paragraph (b)(4) of this section, it must identify and provide a certification from the procuring agency relating to each 8(a) contract for which a waiver is sought.

(4) SBA will process a request for waiver within 90 days of receipt of a complete waiver package by the AA/BD.

* * * * *

■ 42. Amend § 124.521 by revising paragraph (e)(2) to read as follows:

§ 124.521 What are the requirements for representing 8(a) status, and what are the penalties for misrepresentation?

* * * * *

(e) * * *

(2) For the purposes of 8(a) contracts (including Multiple Award Contracts) with durations of more than five years (including options), a contracting officer must verify in *SAM.gov* (or successor system) whether a business concern continues to be an eligible 8(a) Participant no more than 120 days prior to the end of the fifth year of the contract, and no more than 120 days prior to exercising any option thereafter. Where a concern fails to qualify or will no longer qualify as an eligible 8(a) Participant at any point during the 120 days prior to the end of the fifth year of the contract, the option shall not be exercised.

* * * * *

§ 124.603 [Amended]

■ 43. Amend § 124.603 by removing the words ''graduates or is terminated from the program'' and adding in their place the words ''leaves the 8(a) BD program (either through the expiration of the firm's program term, graduation, or termination)''.

■ 44. Add § 124.1002 to read as follows:

§ 124.1002 Reviews and protests of SDB status.

(a) SBA may initiate the review of SDB status on any firm that has represented itself to be an SDB on a prime contract (for goaling purposes or otherwise) or subcontract to a federal prime contract whenever SBA receives credible information calling into question the SDB status of the firm.

(b) Requests for an SBA review of SDB status may be forwarded to the Small Business Administration, Associate Administrator for Business Development (AA/BD), 409 Third Street SW, Washington, DC 20416.

(c) The contracting officer or the SBA may protest the SDB status of a proposed subcontractor or subcontract awardee. Other interested parties may submit information to the contracting officer or the SBA in an effort to persuade the contracting officer or the SBA to initiate a protest. Such protests, in order to be considered timely, must be submitted to the SBA prior to completion of performance by the intended subcontractor.

(1) SBA will request relevant information from the protested concern pertaining to: (i) the social and economic disadvantage of the individual(s) claiming to own and control the protested concern; (ii) the ownership and control of the protested concern; and (iii) the size of the protested concern.

(2) The concern whose disadvantaged status is under consideration has the burden of establishing that it qualifies as an SDB.

(3) Where SBA requests specific information and the concern does not submit it, SBA may draw adverse inferences against the concern.

(4) SBA will base its SDB determination upon the record, including reasonable inferences from the record, and will state in writing the basis for its findings and conclusions.

(d) Where SBA determines that a subcontractor does not qualify as an SDB, the prime contractor must not include subcontracts to that subcontractor as subcontracts to an SDB in its subcontracting reports, starting from the time that the protest was decided.

PART 125—GOVERNMENT CONTRACTING PROGRAMS

■ 45. The authority citation for part 125 is revised to read as follows:

Authority: 15 U.S.C. 632(p), (q), 634(b)(6), 637, 644, 657(b), 657(f), 657r, and 657s.

■ 46. Amend § 125.1 by:

■ a. Revising the definitions of ''Consolidation of contract requirements, consolidated contract, or consolidated requirement'', and ''Contract bundling, bundled requirement, bundled contract, or bundling'';

■ b. In the definition of ''Cost of materials'' removing the words ''commercial items'' and adding in their place the words ''commercial products'';

■ c. Adding definitions of ''Small business concerns owned and controlled by socially and economically disadvantaged individuals'' and ''Socially and economically disadvantaged individuals''; and

■ d. Revising the definition of ''Substantial bundling''.

The revisions and additions to read as follows:

§ 125.1 What definitions are important to SBA's Government Contracting Programs?

* * * * *

Consolidation of contract requirements, consolidated contract, or consolidated requirement means a solicitation for a single contract, a Multiple Award Contract, or Blanket Purchase Agreement to:

(1) Satisfy two or more requirements of the Federal agency for goods or services that have been provided to or performed for the Federal agency under two or more separate contracts each of which was lower in cost than the total cost of the contract or agreement for which the offers are solicited, the total cost of which exceeds $2 million (including options), regardless of whether new work is added to the solicitation for the contract or agreement; or

(2) Satisfy requirements of the Federal agency for construction projects to be performed at two or more discrete sites.

* * * * *

Contract bundling, bundled requirement, bundled contract, or bundling means the consolidation of two or more procurement requirements for goods or services previously provided or performed under separate smaller contracts into a solicitation of offers for a single contract, a Multiple Award Contract, or Blanket Purchase Agreement that is likely to be unsuitable for award to a small business concern (but may be suitable for award to a small business with a Small Business Teaming Arrangement), regardless of whether new work is added to the solicitation for the contract or agreement, due to:

(1) The diversity, size, or specialized nature of the elements of the performance specified;

(2) The aggregate dollar value of the anticipated award;

(3) The geographical dispersion of the contract performance sites; or

(4) Any combination of the factors described in paragraphs (1), (2), and (3) of this definition.

* * * * *

Small business concern owned and controlled by socially and economically disadvantaged individuals means, for both SBA's subcontracting assistance program in 15 U.S.C. 637(d) and for the goals described in 15 U.S.C. 644(g), a small business concern unconditionally and directly owned by and controlled by one or more socially and economically disadvantaged individuals.

Socially and economically disadvantaged individuals, for both SBA's subcontracting assistance program in 15 U.S.C. 637(d) and for the goals described in 15 U.S.C. 644(g), means:

(1) Individuals who meet the criteria for social disadvantage in § 124.103(a) through (c) of this chapter and the criteria for economic disadvantage in § 124.104(a) and (c) of this chapter;

(2) Indian tribes and Alaska Native Corporations that satisfy the ownership, control, and disadvantage criteria in § 124.109 of this chapter;

(3) Native Hawaiian Organizations that satisfy the ownership, control, and disadvantage criteria in § 124.110 of this chapter; or

(4) Community Development Corporations that satisfy the ownership and control criteria in § 124.111 of this chapter.

* * * * *

Substantial bundling means any bundling that meets or exceeds the following dollar amounts (if the acquisition strategy contemplates multiple award contracts, orders placed under unrestricted multiple award contracts, or a Blanket Purchase Agreement issued against a GSA Schedule contract or a task or delivery order contract awarded by another agency, these thresholds apply to the cumulative estimated value of the Multiple Award Contracts, orders, or Blanket Purchase Agreement, including options):

(1) $8.0 million or more for the Department of Defense;

(2) $6.0 million or more for the National Aeronautics and Space Administration, the General Services Administration, and the Department of Energy; and

(3) $2.5 million or more for all other agencies.

* * * * *

■ 47. Amend § 125.2 by adding a new sentence after the second sentence in paragraph (d)(2)(ii), and revising paragraph (d)(3)(i) to read as follows;

§ 125.2 What are SBA's and the procuring agency's responsibilities when providing contracting assistance to small businesses?

* * * * *

(d) * * *

(2) * * *

(ii) * * * This analysis must include quantification of the reduction or increase in price of the proposed bundled strategy as compared to the cumulative value of the separate contracts. * * *

* * * * *

(3) * * *

(i) The analysis for bundled requirements set forth in paragraphs (d)(2)(i) and (ii) of this section;

■ 48. Amend § 125.3 by:

■ a. Revising paragraph (a)(1)(i)(B);

■ b. Removing the words ''bank fees;'' from paragraph (a)(1)(iii);

■ c. Removing the words ''commercial item'' in paragraph (c)(1)(i) and adding in their place the words ''commercial product or commercial service'';

■ d. Revising paragraph (c)(1)(iv);

■ e. Revising the first sentence of paragraph (c)(1)(viii);

■ f. Removing the words ''commercial items'' in paragraph (c)(1)(x) and adding in their place the words ''commercial products or commercial services''; and

■ g. Revising paragraph (c)(2).

The revisions read as follows:

§ 125.3 What types of subcontracting assistance are available to small businesses?

(a) * * *

(1) * * *

(i) * * *

(B) Purchases from a corporation, company, or subdivision that is an affiliate of the prime contractor or subcontractor, or a joint venture in which the contractor is one of the joint venturers, are not included in the subcontracting base. Subcontracts by first-tier affiliates, and subcontracts by a joint venture in which the prime contractor is one of the joint venturers, shall be treated as subcontracts of the prime.

* * * * *

(c) * * *

(1) * * *

(iv) When developing an individual subcontracting plan (also called individual contract plan), the contractor must determine whether to include indirect costs in its subcontracting goals. A prime contractor must include indirect costs in its subcontracting goals if the contract exceeds $7.5 million. Below $7.5 million, a prime contractor may include indirect costs in its subcontracting plan at its option. If indirect costs are included in the goals, these costs must be included in the Individual Subcontract Report (ISR) in *www.esrs.gov* (eSRS) or Subcontract Reports for Individual Contracts (the paper SF–294, if authorized). Contractors may use a pro rata formula to allocate indirect costs to covered individual contracts, if the indirect costs are not already allocable to specific contracts. Regardless of whether the contractor has included indirect costs in the subcontracting plan, indirect costs must be included on a prorated basis in the Summary Subcontracting Report (SSR) in the eSRS system. A contractor authorized to use a commercial subcontracting plan must include all indirect costs in its subcontracting goals and in its SSR;

* * * * *

(viii) The contractor must provide pre-award written notification to unsuccessful small business offerors on all competitive subcontracts over the simplified acquisition threshold (as defined in the FAR at 48 CFR 2.101).

* * *

* * * * *

(2) A commercial plan, also referred to as an annual plan or company-wide plan, is the preferred type of subcontracting plan for contractors furnishing commercial products and commercial services. A commercial plan covers the offeror's fiscal year and applies to all of the commercial products and commercial services sold by either the entire company or a portion thereof (*e.g.,* division, plant, or product line). Once approved, the plan remains in effect during the federal fiscal year for all Federal Government contracts in effect during that period. The contracting officer of the agency that originally approved the commercial plan will exercise the functions of the contracting officer on behalf of all agencies that award contracts covered by the plan.

* * * * *

■ 49. Amend § 125.6 by:

■ a. In paragraph (c) in the second sentence:

■ i. Removing the reference to ''§ 121.103(h)(4)'' and adding in its place a reference to ''§ 121.103(h)(3)'';

■ ii. Adding a ''.''after the words ''shall be considered subcontracted'' and before the words ''SBA will also'';

■ b. Revising the first sentence of paragraph (d) introductory text and adding a new second sentence;

■ c. Redesignating paragraphs (e), (f) and (g) as paragraphs (f), (g) and (h), respectively; and

■ d. Adding a new paragraph (e).

The revision and additions to read as follows:

§ 125.6 What are the prime contractor's limitations on subcontracting?

* * * * *

(d) *Determining compliance with applicable limitation on subcontracting.* The period of time used to determine compliance for a total or partial set-aside contract will generally be the base term and then each subsequent option period. However, for a multi-agency set aside contract where more than one agency can issue orders under the contract, the ordering agency must use the period of performance for each order to determine compliance. * * *

(e) *Past Performance Evaluation.* Where an agency determines that a contractor has not met the applicable limitation on subcontracting requirement at the conclusion of contract performance, the agency must notify the business concern and give it the opportunity to explain any extenuating or mitigating circumstances

that negatively impacted its ability to do so.

(1) Where a small business does not provide any extenuating or mitigating circumstances or the agency determines that the concern's failure to meet the applicable limitation on subcontracting requirement was not beyond the concern's control, the agency may not give a satisfactory or higher past performance rating for the appropriate factor or subfactor in accordance with FAR 42.1503.

(2) Where a contracting officer determines that extenuating circumstances warrant a satisfactory/positive past performance evaluation for the appropriate evaluation factor or subfactor and the individual at least one level above the contracting officer concurs with that determination, a satisfactory or higher past performance rating may be given.

(i) Extenuating or mitigating circumstances that could lead to a satisfactory/positive rating include, but are not limited to, unforeseen labor shortages, modifications to the contract's scope of work which were requested or directed by the Government, emergency or rapid response requirements that demand immediate subcontracting actions by the prime small business concern, unexpected changes to a subcontractor's designation as a similarly situated entity (as defined in § 125.1), differing site or environmental conditions which arose during the course of performance, force majeure events, and the contractor's good faith reliance upon a similarly situated subcontractor's representation of size or relevant socioeconomic status.

(ii) An agency cannot rely on any circumstances that were within the contractor's control, or those which could have been mitigated without imposing an undue cost or burden on the contractor.

* * * * *

■ 50. Amend § 125.8 by:

■ a. Removing the reference to ''§ 121.103(h)(3)'' in paragraph (a) and adding in its place a reference to ''§ 121.103(h)(4)'';

■ b. Revising paragraph (b)(2) introductory text;

■ c. Adding two sentences at the end of paragraph (b)(2)(ii)(A);

■ d. Removing the reference to ''paragraph (d)'' in paragraph (b)(2)(vii) wherever it appears and adding in its place a reference to ''paragraph (c)''; and

■ e. Revising paragraph (h)(2).

The revisions and addition to read as follows:

§ 125.8 What requirements must a joint venture satisfy to submit an offer for a procurement or sale set aside or reserved for small business?

* * * * *

(b) * * *

(2) Every joint venture agreement to perform a contract set aside or reserved for small business between a protégé small business and its SBA-approved mentor authorized by § 125.9 must contain a provision:

(ii) * * *

(A) * * * The joint venture agreement may not give to a non-managing venturer negative control over activities of the joint venture, unless those provisions would otherwise be commercially customary for a joint venture agreement for a government contract outside of SBA's programs. A non-managing venturer's approval may be required in, among other things, determining what contract opportunities the joint venture should seek and initiating litigation on behalf of the joint venture.

* * * * *

(iv) Stating that the small business participant(s) must receive profits from the joint venture commensurate with the work performed by them, or a percentage agreed to by the parties to the joint venture whereby the small business participant(s) receive profits from the joint venture that exceed the percentage commensurate with the work performed by them, and that at the conclusion of the joint venture contract(s) and/or the termination of the joint venture, any funds remaining in the joint venture bank account shall be distributed according to the percentage of ownership;

* * * * *

(h) * * *

(2) At the completion of every contract set aside or reserved for small business that is awarded to a joint venture between a protégé small business and a mentor authorized by § 125.9, and upon request by SBA or the relevant contracting officer prior to contract completion, the small business partner to the joint venture must submit a report to the relevant contracting officer and to SBA, signed by an authorized official of each partner to the joint venture, explaining how and certifying that the performance of work requirements were met for the contract, and further certifying that the contract was performed in accordance with the provisions of the joint venture agreement that are required under paragraph (b) of this section.

* * * * *

■ 51. Amend § 125.9 by:

■ a. Revising paragraph (b)(3)(ii);

■ b. Redesignating paragraphs (e)(1)(ii) and (iii) as paragraphs (e)(1)(iii) and (iv), respectively;

■ c. Adding a new paragraph (e)(1)(ii); and

■ d. Adding paragraph (e)(6)(iv).

The revision and addition to read as follows:

§ 125.9 What are the rules governing SBA's small business mentor-protégé program?

* * * * *

(b) * * *

(3) * * *

(ii) A mentor (including in the aggregate a parent company and all of its subsidiaries) generally cannot have more than three protégés at one time.

(A) The first two mentor-protégé relationships approved by SBA between a specific mentor and a small business that has its principal office located in the Commonwealth of Puerto Rico do not count against the limit of three proteges that a mentor can have at one time.

(B) Where a mentor purchases another business entity that is also an SBA-approved mentor of one or more protégé small business concerns and the purchasing mentor commits to honoring the obligations under the seller's mentor-protégé agreement(s), that entity may have more than three protégés (*i.e.,* those of the purchased concern in addition to those of its own). In such a case, the entity could not add another protégé until it fell below three in total.

* * * * *

(e) * * *

(1) * * *

(ii) Identify the specific entity or entities that will provide assistance to or participate in joint ventures with the protégé where the mentor is a parent or subsidiary concern;

* * * * *

(6) * * *

(iv) Instead of having a six-year mentor-protégé relationship with two separate mentors, a protégé may elect to extend or renew a mentor-protégé relationship with the same mentor for a second six-year term. In order for SBA to approve an extension or renewal of a mentor-protégé relationship with the same mentor, the mentor must commit to providing additional business development assistance to the protégé.

* * * * *

PART 126—HUBZONE PROGRAM

■ 52. The authority citation for part 126 continues to read as follows:

Authority: 15 U.S.C. 632(a), 632(j), 632(p), 644 and 657a.

■ 53. Amend § 126.200 by revising paragraph (b)

§ 126.200 What requirements must a concern meet to be eligible as a certified HUBZone small business concern?

* * * * *

(b) *Size.* (1) In order to be eligible for HUBZone certification and remain eligible as a certified HUBZone small business concern, a concern, together with its affiliates, must qualify as a small business concern as defined in part 121 of this chapter under the size standard corresponding to any NAICS code listed in its profile in the System for Award Management (*SAM.gov*).

(2) In order to be eligible for a HUBZone contract, a certified HUBZone small business concern must qualify as small under the size standard corresponding to the NAICS code assigned to the HUBZone contract.

(3) If the concern is a small agricultural cooperative, in determining size, the small agricultural cooperative is treated as a ''business concern'' and its member shareholders are not considered affiliated with the cooperative by virtue of their membership in the cooperative.

§ 126.203 [Removed and Reserved]

■ 54. Remove and reserve § 126.203.

■ 55. Amend § 126.306 by adding paragraphs (b)(1) and (b)(2) to read as follows:

§ 126.306 How will SBA process an application for HUBZone certification?

* * * * *

(b) * * *

(1) If a concern submits inconsistent information that results in SBA's inability to determine the concern's compliance with any of the HUBZone eligibility requirements, SBA will decline the concern's application.

(2) If, during the processing of an application, SBA determines that an applicant has knowingly submitted false information, regardless of whether correct information would cause SBA to deny the application, and regardless of whether correct information was given to SBA in accompanying documents, SBA will deny the application.

* * * * *

■ 56. Amend § 126.503 by revising paragraph (a)(2), and adding paragraphs (c) and (d) to read as follows:

§ 126.503 What happens if SBA is unable to verify a HUBZone small business concern's eligibility or determines that a concern is no longer eligible for the program?

(a) * * *

(2) *SBA's decision.* SBA will determine whether the HUBZone small business concern remains eligible for the program within 90 calendar days after receiving all requested information, when practicable. The D/HUB will provide written notice to the concern stating the basis for the determination.

(i) If SBA finds that the concern is not eligible, the D/HUB will decertify the concern and remove its designation as a certified HUBZone small business concern in DSBS and the System for Award Management (or successor system) within four business days of the determination.

(ii) If SBA finds that the concern is eligible, the concern will continue to be designated as a certified HUBZone small business concern in DSBS (or successor system).

* * * * *

(c) *Decertification due to submission of false information.* If SBA discovers that a certified HUBZone small business concern or its representative knowingly submitted false information, SBA will propose the firm for decertification. In addition, SBA will refer the matter to the SBA Office of Inspector General for review and may request that Government-wide debarment or suspension proceedings be initiated by the agency.

(d) *Effect of decertification.* Once SBA has decertified a concern, the concern cannot submit an offer or quote as a HUBZone small business concern. If a concern does so, it may be in violation of criminal laws, including section 16(d) of the Small Business Act, 15 U.S.C. 645(d). If the concern has already certified as a HUBZone small business on a pending procurement, the concern must immediately inform the contracting officer for the procuring agency of the adverse eligibility determination. A contracting officer shall not award a HUBZone contract to a concern that the D/HUB has determined is not an eligible HUBZone small business concern for the procurement in question.

■ 57. Amend § 126.601 by revising paragraph (d) and adding paragraph (e) to read as follows:

§ 126.601 What additional requirements must a certified HUBZone small business concern meet to submit an offer on a HUBZone contract?

* * * * *

(d) Where a subcontractor that is not a certified HUBZone small business will perform the primary and vital requirements of a HUBZone contract, or where a HUBZone prime contractor is unduly reliant on one or more small businesses that are not HUBZone-certified to perform the HUBZone contract, the prime contractor is not eligible for award of that HUBZone contract.

(1) When the subcontractor qualifies as small for the size standard assigned to the procurement, this issue may be grounds for a HUBZone status protest, as described in § 126.801. When the subcontractor is alleged to be other than small for the size standard assigned to the procurement, this issue may be grounds for a size protest under the ostensible subcontractor rule, as described at § 121.103(h)(3) of this chapter.

(2) In the case of a contract or order for services, specialty trade construction or supplies, SBA will find that a prime HUBZone contractor is performing the primary and vital requirements of the contract or order, and is not unduly reliant on one or more subcontractors that are not HUBZone-certified, where the prime contractor can demonstrate that it, together with any subcontractors that are certified HUBZone small business concerns, will meet the limitations on subcontracting provisions set forth in § 125.6 of this chapter.

(3) In a general construction contract, the primary and vital requirements of the contract are the management, supervision and oversight of the project, including coordinating the work of various subcontractors, not the actual construction work performed.

(e) For two-step procurements (including architect-engineering and design-build procurements) to be awarded as HUBZone contracts, a concern must be a certified HUBZone small business concern as of the date that it submits its initial bid or proposal (which may or may not include price) during phase one.

■ 58. Add § 126.609 to read as follows:

§ 126.609 Can a HUBZone competition be limited or authorize preferences to small business concerns having additional socioeconomic certifications?

A procuring activity cannot restrict a HUBZone competition (for either a contract or order) to require SBA socioeconomic certifications other than HUBZone certification (*i.e.,* a competition cannot be limited only to business concerns that are both HUBZone and 8(a), HUBZone and WOSB, or HUBZone and SDVO) or give evaluation preferences to firms having one or more other certifications.

■ 59. Amend § 126.616 by revising paragraph (a) to read as follows:

§ 126.616 What requirements must a joint venture satisfy to submit an offer and be eligible to perform on a HUBZone contract?

(a) *General.* A certified HUBZone small business concern may enter into a joint venture agreement with one or more other small business concerns, or with an SBA-approved mentor authorized by § 125.9 of this chapter, for the purpose of submitting an offer for a HUBZone contract.

(1) The joint venture itself need not be a certified HUBZone small business concern, but the joint venture should be designated as a HUBZone joint venture in SAM (or successor system) with the HUBZone-certified joint venture partner identified.

(2) A certified HUBZone small business concern cannot be a joint venture partner on more than one joint venture that submits an offer for a specific contract or order set-aside or reserved for certified HUBZone small business concerns.

* * * * *

§ 126.618 [Amended]

■ 60. Amend § 126.618 in paragraph (c)(2) by removing the reference to ''§ 121.103(h)(4)'' and adding in its place a reference to ''§ 121.103(h)(3)''.

■ 61. Amend § 126.801 by revising paragraphs (b), (d) introductory text, (d)(1) and (2), and (e) to read as follows:

§ 126.801 How does an interested party file a HUBZone status protest?

* * * * *

(b) *Format and specificity.* (1) Protests must be in writing and must state all specific grounds as to why the protestor believes the protested concern should not qualify as a certified HUBZone small business concern. Specifically, a protestor must explain why:

(i) The protested concern did not meet the HUBZone eligibility requirements set forth in § 126.200;

(ii) The protested joint venture does not meet the requirements set forth in § 126.616;

(iii) The protested concern, as a HUBZone prime contractor, is unduly reliant on one or more small subcontractors that are not HUBZone-certified, or subcontractors that are not HUBZone-certified will perform the primary and vital requirements of the contract; and/or

(iv) The protested concern, on the anniversary date of its initial HUBZone certification, failed to attempt to maintain compliance with the 35% HUBZone residency requirement during the performance of a HUBZone contract.

(2) Specificity requires more than conclusions of ineligibility. A protest merely asserting that the protested concern did not qualify as a HUBZone small business concern, or that it did not meet the principal office and/or 35% residency requirements, without setting forth specific facts or allegations, is insufficient and will be dismissed.

(3) For a protest filed against a HUBZone joint venture, the protest must state all specific grounds as to why:

(i) The HUBZone small business partner to the joint venture did not meet the HUBZone eligibility requirements set forth in § 126.200 at the time the concern applied for certification or on the anniversary of such certification; and/or

(ii) The protested HUBZone joint venture does not meet the requirements set forth in § 126.616.

(4) For a protest alleging that the prime contractor has an ostensible subcontractor, the protest must state all specific grounds as to why:

(i) The protested concern is unduly reliant on one or more small subcontractors that are not HUBZone-certified, or

(ii) One or more subcontractors that are not HUBZone-certified will perform the primary and vital requirements of the contract.

(5) For a protest alleging that the protested concern failed to attempt to maintain compliance with the 35% HUBZone residency requirement during the performance of a HUBZone contract, the protest must state all specific grounds explaining why the protester believes that at least 20% of the protested firm's employees do not reside in a HUBZone.

* * * * *

(d) *Timeliness.* A protest challenging the HUBZone status of an apparent successful offeror on a HUBZone contract must be timely, or it will be dismissed.

(1) For negotiated acquisitions, an interested party must submit its protest by close of business on the fifth business day after notification by the contracting officer of the apparent successful offeror.

(i) Except for an order or Blanket Purchase Agreement issued under a Federal Supply Schedule contract, for an order or Agreement that is set-aside for certified HUBZone small business concerns under a multiple award contract that was not itself set aside or reserved for certified HUBZone small business concerns, an interested party must submit its protest by close of business on the fifth business day after notification by the contracting officer of the intended awardee of the order or Agreement.

(ii) Where a contracting officer has required offerors for a specific order under a multiple award HUBZone contract to recertify their HUBZone status, an interested party must submit its protest by close of business on the fifth business day after notification by the contracting officer of the intended awardee of the order.

(2) For sealed bid acquisitions:

(i) An interested party must submit its protest by close of business on the fifth business day after bid opening, or where the identified low bidder is determined to be ineligible for award, by close of business on the fifth business day after the contracting officer has notified interested parties of the identity of that low bidder, or

(ii) If the price evaluation preference was not applied at the time of bid opening, an interested party must submit its protest by close of business on the fifth business day after the date of identification of the apparent successful low bidder.

* * * * *

(e) *Referral to SBA.* The contracting officer must forward to SBA any non-premature HUBZone status protest received, notwithstanding whether he or she believes it is sufficiently specific or timely. The contracting officer must send the protest, along with a referral letter, to the D/HUB by email to *hzprotests@sba.gov.*

(1) The contracting officer's referral letter must include information pertaining to the solicitation that may be necessary for SBA to determine timeliness and standing, including the following:

(i) The solicitation number;

(ii) The name, address, telephone number, email address, and facsimile number of the contracting officer;

(iii) The type of HUBZone contract at issue (*i.e.,* HUBZone set-aside; HUBZone sole source; full and open competition with a HUBZone price evaluation preference applied; reserve for HUBZone small business concerns under a Multiple Award Contract; or order set-aside for HUBZone small business concerns against a Multiple Award Contract);

(iv) If the procurement was conducted using full and open competition with a HUBZone price evaluation preference, whether the protester's opportunity for award was affected by the preference;

(v) If the procurement was a HUBZone set-aside, whether the protester submitted an offer;

(vi) Whether the protested concern was the apparent successful offeror;

(vii) Whether the procurement was conducted using sealed bid or negotiated procedures;

(viii) If the procurement was conducted using sealed bid procedures, the bid opening date;

(ix) The date the protester was notified of the apparent successful offeror;

(x) The date the protest was submitted to the contracting officer;

(xi) The date the protested concern submitted its initial offer or bid to the contracting activity; and

(xii) Whether a contract has been awarded, and if applicable, the date of contract award and contract number.

(2) Where a protestor alleges that a certified HUBZone small business concern is unduly reliant on one or more subcontractors that are not certified HUBZone small business concerns or a subcontractor that is not a certified HUBZone small business concern will perform primary and vital requirements of the contract, the D/HUB will refer the matter to the Government Contracting Area Office serving the geographic area in which the principal office of the certified HUBZone small business concern is located for a determination as to whether the ostensible subcontractor rule has been met.

PART 127—WOMEN-OWNED SMALL BUSINESS FEDERAL CONTRACT PROGRAM

■ 62. The authority citation for part 127 continues to read as follows:

Authority: 15 U.S.C. 632, 634(b)(6), 637(m), 644 and 657r.

■ 63. Amend § 127.102 by revising the definition of ''WOSB'' to read as follows:

§ 127.102 What are the definitions of the terms used in this part?

* * * * *

Women-Owned Small Business (WOSB) means a concern that qualifies as small pursuant to part 121 of this chapter under the size standard corresponding to any NAICS code listed in its SAM profile, and that is at least 51 percent owned and controlled by one or more women who are citizens in accordance with §§ 127.200, 127.201 and 127.202. This definition applies to any certification as to a concern's status as a WOSB, not solely to those certifications relating to a WOSB contract.

* * * * *

■ 64. Amend § 127.200 by revising paragraphs (a)(1) and (b)(1) to read as follows:

§ 127.200 What are the requirements a concern must meet to qualify as an EDWOSB or WOSB?

(a) * * *

(1) A small business concern as defined in part 121 of this chapter under the size standard corresponding to any NAICS code listed in its SAM profile; and

* * * * *

(b) * * *

(1) A small business as defined in part 121 of this chapter for the size standard corresponding to any NAICS code listed in its SAM profile; and

* * * * *

■ 65. Amend § 127.201 by revising the first sentence of paragraph (b) to read as follows:

§ 127.201 What are the requirements for ownership of an EDWOSB and WOSB?

* * * * *

(b) * * * To be considered unconditional, the ownership must not be subject to any conditions, executory agreements, voting trusts, or other arrangements that cause or potentially cause ownership benefits to go to another (other than after death or incapacity). * * *

* * * * *

■ 66. Amend § 127.202 by revising paragraph (c) to read as follows:

§ 127.202 What are the requirements for control of an EDWOSB or WOSB?

* * * * *

(c) *Limitation on outside employment.* The woman or economically-disadvantaged woman who holds the highest officer position of the business concern may not engage in outside employment that prevent her from devoting sufficient time and attention to the business concern to control its management and daily operations. Where a woman or economically disadvantaged woman claiming to control a business concern devotes fewer hours to the business than its normal hours of operation, there is a rebuttable presumption that she does not control the business concern. In such a case, the woman must provide evidence that she has ultimate managerial and supervisory control over both the long-term decision making and day-to-day management and administration of the business.

* * * * *

■ 67. Amend § 127.304 by adding paragraphs (c)(1), (c)(2), (g)(1), and (g)(2) to read as follows:

§ 127.304 How is an application for certification processed?

* * * * *

(c) * * *

(1) If a concern submits inconsistent information that results in SBA's inability to determine the concern's compliance with any of the WOSB or EDWOSB eligibility requirements, SBA will decline the concern's application.

(2) If, during the processing of an application, SBA determines that an applicant or its representative has knowingly submitted false information, regardless of whether correct information would cause SBA to deny the application, and regardless of whether correct information was given to SBA in accompanying documents, SBA will deny the application.

* * * * *

(g) * * *

(1) If SBA denies a business concern's application for WOSB certification based on lack of ownership or lack of control by women, within two days of SBA's denial, the applicant concern must update its WOSB self-certification status in the System for Award Management (or any successor system) to reflect that the concern is not an eligible WOSB.

(2) If a business concern fails to update its WOSB self-certification status in the System for Award Management (or any successor system), SBA will make such update within two days of the business's failure to do so.

* * * * *

■ 68. Revise § 127.400 to read as follows:

§ 127.400 How does a concern maintain its WOSB or EDWOSB certification?

Any concern seeking to remain a certified WOSB or EDWOSB must undergo a program examination every three years.

(a) SBA or a third-party certifier will conduct a program examination three years after the concern's initial WOSB or EDWOSB certification (whether by SBA or a third-party certifier) or three years after the date of the concern's last program examination, whichever date is later.

Example to paragraph (a). Concern A is certified by SBA to be eligible for the WOSB Program on March 31, 2023. Concern A is considered a certified WOSB that is eligible to receive WOSB contracts (as long as it is small for the size standard corresponding to the NAICS code assigned to the contract) through March 30, 2026. On April 22, 2025, after Concern A is identified as the apparent successful offeror on a WOSB set-aside contract, its status as an eligible WOSB is protested. On May 15, 2025, Concern A receives a positive determination from SBA confirming that

it is an eligible WOSB. Concern A's new certification date is May 15, 2025. Concern A is now considered a certified WOSB that is eligible to receive WOSB contracts (as long as it is small for the size standard corresponding to the NAICS code assigned to the contract) through May 14, 2028.

(b) The concern must either request a program examination from SBA or notify SBA that it has requested a program examination from a third-party certifier no later than 30 days prior to its certification anniversary. Failure to do so will result in the concern being decertified.

Example to paragraph (b). Concern B is certified by a third-party certifier to be eligible for the WOSB Program on July 20, 2023. Concern B is considered a certified WOSB that is eligible to receive WOSB contracts (as long as it is small for the size standard corresponding to the NAICS code assigned to the contract) through July 19, 2026. Concern B must request a program examination from SBA or notify SBA that it has requested a program examination from a third-party certifier, by June 20, 2026, to continue participating in the WOSB Program after July 19, 2026.

■ 69. Amend § 127.405 by redesignating paragraph (c) as paragraph (f), and by adding new paragraphs (c), (d) and (e) to read as follows:

§ 127.405 What happens if SBA determines that the concern is no longer eligible for the program?

* * * * *

(c) *Decertification in response to adverse protest decision.* SBA will decertify a concern found to be ineligible during a WOSB/EDWOSB status protest.

(d) *Decertification due to submission of false information.* If SBA discovers that a WOSB or EDWOSB or its representative knowingly submitted false information, SBA will propose the firm for decertification. In addition, SBA will refer the matter to the SBA Office of Inspector General for review and may request that Government-wide debarment or suspension proceedings be initiated by the agency.

(e) *Effect of decertification.* Once SBA has decertified a concern, the concern cannot self-certify as a WOSB or EDWOSB, as applicable, for any WOSB or EDWOSB contract. If a concern does so, it may be in violation of criminal laws, including section 16(d) of the Small Business Act, 15 U.S.C. 645(d). If the concern has already certified itself as a WOSB or EDWOSB on a pending procurement, the concern must immediately inform the contracting officer for the procuring agency of its decertification.

(1) Not later than two days after the date on which SBA decertifies a business concern, such concern must update its WOSB/EDWOSB status in the System for Award Management (or any successor system).

(2) If a business concern fails to update its WOSB/EDWOSB status in the System for Award Management (or any successor system) in response to decertification, SBA will make such update within two days of the business's failure to do so.

* * * * *

■ 70. Amend § 127.503 by redesignating paragraphs (e), (f) and (g) as paragraphs (f), (g), and (h), respectively, and by adding a new paragraph (e) to read as follows:

§ 127.503 When is a contracting officer authorized to restrict competition or award a sole source contract or order under this part?

* * * * *

(e) *Competitions requiring or favoring additional socioeconomic certifications.* A procuring activity cannot restrict a WOSB or EDWOSB competition (for either a contract or order) to require SBA socioeconomic certifications other than WOSB/EDWOSB certification (*i.e.,* a competition cannot be limited only to business concerns that are both WOSB/EDWOSB and 8(a), WOSB/EDWOSB and HUBZone, or WOSB/EDWOSB and SDVO) or give evaluation preferences to firms having one or more other certifications.

* * * * *

■ 71. Amend § 127.504 by

■ a. In paragraph (g)(1) removing the reference to ''§ 121.103(h)(2)'' and adding in its place a reference to ''§ 121.103(h)(3)'';

■ b. Revising paragraph (g)(2), and

■ c. Adding paragraph (g)(3).

The addition and revision read as follows:

§ 127.504 What requirements must an EDWOSB or WOSB meet to be eligible for an EDWOSB or WOSB requirement?

* * * * *

(g) * * *

(2) In the case of a contract or order for services, specialty trade construction or supplies, SBA will find that a prime WOSB or EDWOSB contractor is performing the primary and vital requirements of the contract or order, and is not unduly reliant on one or more subcontractors that are not certified WOSBs or EDWOSBs, where the prime contractor can demonstrate that it, together with any subcontractors that are certified WOSBs or EDWOSBs, will meet the limitations on subcontracting provisions set forth in § 125.6 of this chapter.

(3) In a general construction contract, the primary and vital requirements of the contract are the management, supervision and oversight of the project, including coordinating the work of various subcontractors, not the actual construction work performed.

* * * * *

■ 72. Amend § 127.506 by adding paragraph (a)(3) to read as follows:

§ 127.506 May a joint venture submit an offer on an EDWOSB or WOSB requirement?

* * * * *

(a) * * *

(3) A WOSB or EDWOSB cannot be a joint venture partner on more than one joint venture that submits an offer for a specific contract or order set-aside or reserved for WOSBs or EDWOSBs.

* * * * *

■ 73. Amend § 127.603 by adding a sentence to the end of paragraph (c)(2) and revising paragraph (d) to read as follows:

§ 127.603 What are the requirements for filing an EDWOSB or WOSB status protest?

* * * * *

(c) * * *

(2) * * * Where the identified low bidder is determined to be ineligible for award, a protest of any other identified low bidder must be received prior to the close of business on the 5th business day after the contracting officer has notified interested parties of the identity of that low bidder.

* * * * *

(d) *Referral to SBA.* The contracting officer must forward to SBA any WOSB or EDWOSB status protest received, notwithstanding whether he or she believes it is premature, sufficiently specific, or timely. The contracting officer must send all WOSB and EDWOSB status protests, along with a referral letter and documents, directly to the Director for Government Contracting, U.S. Small Business Administration, 409 Third Street SW, Washington, DC 20416, or by fax to (202) 205–6390, Attn: Women-Owned Small Business Status Protest.

(1) The contracting officer's referral letter must include information pertaining to the solicitation that may be necessary for SBA to determine timeliness and standing, including: the solicitation number; the name, address, telephone number and facsimile number of the contracting officer; whether the protestor submitted an offer; whether the protested concern was the apparent

successful offeror; when the protested concern submitted its offer; whether the procurement was conducted using sealed bid or negotiated procedures; the bid opening date, if applicable; when the protest was submitted to the contracting officer; when the protestor received notification about the apparent successful offeror, if applicable; and whether a contract has been awarded.

(2) Where a protestor alleges that a WOSB/EDWOSB is unduly reliant on one or more subcontractors that are not WOSBs/EDWOSBs or a subcontractor that is not a WOSB/EDWOSB will perform primary and vital requirements of the contract, the D/GC or designee will refer the matter to the Government Contracting Area Office serving the geographic area in which the principal office of the SDVO SBC is located for a determination as to whether the ostensible subcontractor rule has been met.

(3) The D/GC or designee will decide the merits of EDWOSB or WOSB status protests.

PART 128—VETERAN SMALL BUSINESS CERTIFICATION PROGRAM

■ 74. The authority citation for part 128 continues to read as follows:

Authority: 15 U.S.C. 15 U.S.C. 632(q), 634(b)(6), 644, 645, 657f, 657f–1.

§ 128.201 [Amended]

■ 75. Amend § 128.201 by removing paragraph (b) and redesignating paragraph (c) as paragraph (b).

§ 128.203 [Amended]

■ 76. In § 128.203 amend paragraph (i) by removing the words ''outside obligations'' wherever they appear and adding in their place the words ''outside employment''.

■ 77. Amend § 128.302 by adding paragraphs (d)(1), (d)(2), (f)(1), and (f)(2) to read as follows:

§ 128.302 How does SBA process applications for certification?

* * * * *

(d) * * *

(1) If a concern submits inconsistent information that results in SBA's inability to determine the concern's compliance with any of the VOSB or SDVOSB eligibility requirements, SBA will decline the concern's application.

(2) If, during the processing of an application, SBA determines that an applicant has knowingly submitted false information, regardless of whether correct information would cause SBA to deny the application, and regardless of whether correct information was given to SBA in accompanying documents, SBA will deny the application.

* * * * *

(f) * * *

(1) If SBA denies a business concern's application for VOSB or SDVOSB certification, within two days of SBA's denial becoming a final agency decision, the applicant concern must update its VOSB or SDVOSB self-certification status in the System for Award Management (or any successor system) to reflect that the concern is not an eligible VOSB or SDVOSB.

(i) If an applicant appeals the D/GC's denial decision to SBA's Office of Hearings and Appeals (OHA) in accordance with part 134 of this chapter and OHA affirms the ineligibility determination, the two-day requirement applies immediately upon OHA's final decision.

(ii) If an applicant does not appeal the D/GC's denial decision to OHA, the two-day requirement begins 10 business days after receipt of the D/GC's denial.

(2) If a business concern fails to update its VOSB or SDVOSB self-certification status in the System for Award Management (or any successor system) after a final SBA decision, SBA will make such update within two days of the business's failure to do so.

■ 78. Amend § 128.310 by redesignating paragraphs (d) and (e) as paragraphs (e) and (f) respectively, and by adding a new paragraph (d) to read as follows:

§ 128.310 What are the procedures for decertification?

* * * * *

(d) *Decertification due to submission of false information.* If SBA discovers that a VOSB/SDVOSB or its representative knowingly submitted false information, SBA will propose the firm for decertification. In addition, SBA will refer the matter to the SBA Office of Inspector General for review and may request that Government-wide debarment or suspension proceedings be initiated by the agency.

* * * * *

■ 79. Amend § 128.401 by revising paragraph (g)(2) and adding paragraph (g)(3) to read as follows:

§ 128.401 What requirements must a VOSB or SDVOSB meet to submit an offer on a contract?

* * * * *

(g) * * *

(2) In the case of a contract or order for services, specialty trade construction or supplies, SBA will find that a prime VOSB or SDVOSB contractor is performing the primary and vital requirements of the contract or order, and is not unduly reliant on one or more subcontractors that are not certified VOSBs or SDVOSBs, where the prime contractor can demonstrate that it, together with any subcontractors that are certified VOSBs or SDVOSBs, will meet the limitations on subcontracting provisions set forth in § 125.6 of this chapter.

(3) In a general construction contract, the primary and vital requirements of the contract are the management, supervision and oversight of the project, including coordinating the work of various subcontractors, not the actual construction work performed.

* * * * *

■ 80. Amend § 128.402 by revising paragraph (a)(3) to read as follows:

§ 128.402 When may a joint venture submit an offer on a VOSB or SDVOSB contract?

* * * * *

(a) * * *

(3) A VOSB or SDVOSB cannot be a joint venture partner on more than one joint venture that submits an offer for a specific contract or order set-aside or reserved for VOSBs or SDVOSBs.

* * * * *

■ 81. Amend § 128.404 by revising paragraph (d) to read as follows:

§ 128.404 When may a contracting officer set aside a procurement for VOSBs or SDVOSBs?

* * * * *

(d) *Prohibition on competitions requiring or favoring additional socioeconomic certifications.* A procuring activity cannot restrict an SDVOSB competition (for either a contract or order) to require certifications other than SDVOSB certification (*i.e.,* a competition cannot be limited only to business concerns that are both SDVOSB and 8(a), SDVOSB and HUBZone, or SDVOSB and WOSB) or give evaluation preferences to firms having one or more other certifications.

■ 82. Amend § 128.500 by adding paragraph (d) to read as follows:

§ 128.500 What are the requirements for filing a VOSB or SDVOSB status protest?

* * * * *

(d) A concern found not to qualify as a VOSB or SDVOSB in a status protest may not submit an offer on a future VOSB or SDVOSB procurement until the protested concern reapplies to the Veteran Small Business Certification Program and has been designated by SBA as a VOSB or SDVOSB into the certification database. If a concern found to be ineligible submits an offer, it may be in violation of criminal laws, including section 16(d) of the Small Business Act, 15 U.S.C. 645(d). If the

concern has already certified itself as a VOSB or SDVOSB on a pending procurement, the concern must immediately inform the contracting officer for the procuring agency of the adverse determination.

(1) Not later than two days after SBA's final determination finding a concern ineligible as a VOSB or SDVOSB, such concern must update its VOSB or SDVOSB status in the System for Award Management (or any successor system).

(2) If a business concern fails to update its VOSB or SDVOSB status in the System for Award Management (or any successor system) in response to decertification, SBA will make such update within two days of the business's failure to do so.

Isabella Casillas Guzman,

Administrator.

[FR Doc. 2023–07855 Filed 4–26–23; 8:45 am]

BILLING CODE 8026–03–P

Reader Aids

Federal Register

Vol. 88, No. 81

Thursday, April 27, 2023

CUSTOMER SERVICE AND INFORMATION

Federal Register/Code of Federal Regulations	
General Information, indexes and other finding aids	**202–741–6000**
Laws	**741–6000**
Presidential Documents	
Executive orders and proclamations	**741–6000**
The United States Government Manual	**741–6000**
Other Services	
Electronic and on-line services (voice)	**741–6020**
Privacy Act Compilation	**741–6050**

ELECTRONIC RESEARCH

World Wide Web

Full text of the daily Federal Register, CFR and other publications is located at: **www.govinfo.gov.**

Federal Register information and research tools, including Public Inspection List and electronic text are located at: **www.federalregister.gov.**

E-mail

FEDREGTOC (Daily Federal Register Table of Contents Electronic Mailing List) is an open e-mail service that provides subscribers with a digital form of the Federal Register Table of Contents. The digital form of the Federal Register Table of Contents includes HTML and PDF links to the full text of each document.

To join or leave, go to **https://public.govdelivery.com/accounts/USGPOOFR/subscriber/new**, enter your email address, then follow the instructions to join, leave, or manage your subscription.

PENS (Public Law Electronic Notification Service) is an e-mail service that notifies subscribers of recently enacted laws.

To subscribe, go to **http://listserv.gsa.gov/archives/publaws-l.html and select** *Join or leave the list (or change settings);* then follow the instructions.

FEDREGTOC and **PENS** are mailing lists only. We cannot respond to specific inquiries.

Reference questions. Send questions and comments about the Federal Register system to: **fedreg.info@nara.gov**

The Federal Register staff cannot interpret specific documents or regulations.

FEDERAL REGISTER PAGES AND DATE, APRIL

19547–19796 3
19797–20058 4
20059–20382 5
20383–20726 6
20727–21058 7
21059–21458 10
21459–21882 11
21883–22350 12
22351–22892 13
22893–23322 14
23323–23558 17
23559–24106 18
24107–24326 19
24327–24470 20
24471–24676 21
24677–24896 24
24897–25250 25
25251–25478 26
25479–26218 27

CFR PARTS AFFECTED DURING APRIL

At the end of each month the Office of the Federal Register publishes separately a List of CFR Sections Affected (LSA), which lists parts and sections affected by documents published since the revision date of each title.

3 CFR

Proclamations:
10537 19797
10538 19799
10539 20357
10540 20359
10541 20361
10542 20363
10543 20367
10544 20369
10545 20371
10546 20373
10547 20375
10548 20379
10549 20381
10550 22347
10551 22351
10552 24323
10553 24325
10554 25263
10555 25265
10556 25267

Executive Orders:
14094 21879
14095 24669
14096 25251

Administrative Orders:

Notices:
Notice of April 7, 2023 21453
Notice of April 7, 2023 21457
Notice of April 18, 2023 24327

Memorandums:
Memorandum of April 17, 2023 23557

5 CFR

890 20383

7 CFR

205 22893
275 23559
920 21059
985 23323

Proposed Rules:
205 25289
319 23365
800 21931
810 21931
927 ..... 20780, 25559
981 ..... 25559, 25565

8 CFR

208 23329
1003 23329
1240 23329

10 CFR

72 25271
429 ..... 21061, 21816, 24471
430 ..... 19801, 21061, 21752
431 ..... 21816, 24471
590 25272

Proposed Rules:
35 ..... 24130, 24495, 24924
73 24715
430 ..... 21512, 24133
431 20780
474 21525

12 CFR

Ch. X 21883
30 25479
208 25479
338 24677
364 25479
741 25479
1282 23559

Proposed Rules:
Ch. XII 22919
1293 25293

13 CFR

115 24471
120 ..... 21074, 21890, 24474
121 ..... 21074, 24474, 26164
123 24107
124 26164
125 26164
126 ..... 21086, 26164
127 26164
128 26164
134 21086

14 CFR

25 19547
33 19801
39 ..... 19811, 19815, 20059, 20062, 20065, 20067, 20070, 20727, 20730, 20732, 20735, 20738, 20741, 20743, 20746, 20749, 20751, 20754, 21900, 22355, 22357, 22359, 22362, 22364, 22367, 22370, 22372, 22374, 22895, 22900, 22903, 24678, 24681, 24683, 24686, 24688, 24897, 24899
71 ..... 19817, 19819, 19820, 19821, 19822, 19823, 21090, 21091, 21093, 21094, 21095, 21096, 21097, 21098, 21099, 22905, 22907, 23331, 23564, 23566, 23568, 24474, 24475
97 ..... 20073, 20074, 22377, 22378, 24902, 24904
1264 24905
1271 24905

Proposed Rules:
39 ..... 20431, 20433, 20436, 20438, 20782, 20784, 21114, 21117, 21120, 21123, 21540, 21543, 21931, 22383, 22920, 22923, 22925, 22928, 22931,

23583, 23586, 23589, 24144, 24924, 24927
71 .....19895, 21126, 21127, 21129, 21130, 21132, 21134, 21135, 21138, 21139, 21141, 21142, 21144, 21546, 22385, 22387, 22933, 23593, 23595, 23597, 24496, 24937
73.....21146

15 CFR

3.....24110
744.....23332
922.....19824
Proposed Rules:
774.....24341

16 CFR

Proposed Rules:
425.....24716
910.....20441
1281.....24346

17 CFR

229.....20760
232.....20760, 24329
240.....20760
249.....20760
Proposed Rules:
39.....22934
202.....23920
232.....20212, 23920
240 .....20212, 20616, 23920
242.....20212, 23146
248.....20616
249 .....20212, 23146, 23920
249b.....23920
270.....20616
275.....20616

21 CFR

131.....22907
1308.....21101
1310.....21902
Proposed Rules:
130.....21148
131.....21148
133.....21148
136.....21148
137.....21148
139.....21148
145.....21148
150.....21148
155.....21148
156.....21148
158.....21148
161.....21148
163.....21148
166.....21148
168.....21148
169.....21148
1308 .....19896, 22388, 22391
1310.....22955

22 CFR

121.....25488
126.....21910
Proposed Rules:
171.....23368

23 CFR

Proposed Rules:
661.....19571

24 CFR

Proposed Rules:
5.....20442
8.....24938
9.....24938
91.....20442
92.....20442
93.....20442
570.....20442
574.....20442
576.....20442
903.....20442
983.....20442

25 CFR

Proposed Rules:
502.....22962
556.....22962
558.....22962

26 CFR

Proposed Rules
1 .....21547, 23369, 23370
301.....21564

28 CFR

0.....19830
90.....21459

30 CFR

250.....23569
553.....22910
723.....24330
724.....24330
845.....24330
846.....24330
Proposed Rules:
585.....19578
733.....24944
842.....24944

31 CFR

501.....23340
510.....23340
535.....23340
536.....23340
539.....23340
541.....23340
542.....23340, 25278
544.....23340
546.....23340
547.....23340
548.....23340
549.....23340
551.....23340
552.....23340
553.....23340
560.....23340, 25491
561.....23340
566.....23340
570.....21912, 23340
576.....23340
578.....23340
583.....23340
584.....23340
587.....25279
588.....23340, 25491
589.....23340
590.....23340
591.....19840, 19842
592.....23340
594.....23340
597.....23340
598.....23340

32 CFR

199.....19844, 25492
310.....24476, 24477
555.....24480
1900.....23340
1903.....20760

33 CFR

100 .....19856, 19857, 20763, 24480, 24906, 25493
105.....23349
117.....24336
147 .....21468, 21470, 21472, 21474, 22913
165 .....20764, 20766, 20768, 20770, 20772, 20774, 21103, 21476, 22380, 23350, 23351, 24113, 24338, 24909, 24910, 25281, 25494, 25496
Proposed Rules:
117 .....20082, 21938, 21940, 22966, 24739, 25572
147.....22968, 22971
165 .....19579, 20084, 24375, 24741
181.....21016

34 CFR

Proposed Rules:
106.....22860

36 CFR

Proposed Rules:
200.....24497

37 CFR

1.....19862, 24912
41.....19862, 24912
Proposed Rules:
42.....24503

38 CFR

4.....22914
17 .....19862, 21478, 24481
Proposed Rules:
46.....19581

39 CFR

111 .....21478, 24483, 24912
3040.....21914
Proposed Rules:
20.....23386
111.....22973
3035.....20787
3050.....20787
3060.....20787

40 CFR

9.....21480
49.....24916
52 .....20408, 20776, 21490, 21922, 23353, 23356, 24491, 24691, 24693, 24918, 25283, 25498
63.....24339
70.....20408
180 .....19873, 21103, 21107, 24699, 24702, 24705, 25501
721.....21480
Proposed Rules:
Ch. 1 25590
52 .....19901, 20086, 20443, 20788, 21572, 21576, 22976, 22978, 23598, 24377, 24518, 24522, 25309
60.....25080
63 .....22790, 24854, 25080, 25574
81.....23598
84.....21579
85.....24743
86.....24743
141.....20092
142.....20092
180.....24744
302.....22399
600.....24743
1036 .....23388, 24743, 25926
1037 .....23388, 24743, 25926
1054.....23388, 25926
1065.....23388, 25926
1066.....24743
1074.....23388, 25926

41 CFR

102–39.....25508

42 CFR

417.....22120
422.....22120
423.....22120
455.....22120
460.....22120
Proposed Rules:
411.....21316
412.....20950, 21238
413.....21316
418.....20022
424.....20022
435.....25313
457.....25313
488.....21316
489.....21316
600.....25313

43 CFR

Proposed Rules:
1600.....19583
6100.....19583
8360.....20449

45 CFR

153.....25740
155.....25740
156.....25740
160.....22380
164.....22380
Proposed Rules:
152.....25313
155.....25313
160.....23506
164.....23506
170.....23746
171.....23746
309.....24526
310.....24526

46 CFR

113.....25285
501.....23361
502.....23361
Proposed Rules:
25.....21016
28.....21016
108.....21016
117.....21016
133.....21016
141.....21016
160.....21016
169.....21016
180.....21016
199.....21016
298.....24962

47 CFR

0.....21424

1 21424
2 24493
19 21424
20 ....21424, 25286
25 21424
27 21424
43 21424
52 21424
54 ....21111, 21424, 21500
63 21424
64 ....21424, 21497
67 21424
68 21424
73 ....19549, 20076, 21424, 23581, 24339, 24493
74 ....21424, 23581
76 21424
79 21424
80 21424
87 21424
90 21424
95 21424
97 21424
101 21424

Proposed Rules:

2 21944
4 20790
25 21944
54 21580
64 ....20800, 20804
73 22980

48 CFR

Ch. 1 ....25474, 25478
1 ....25474, 25476
7 25477
8 25474
51 25474
52 25474
212 25511
228 25511
538 20077
552 20077
1602 20383
1609 20383

Proposed Rules:

2 20822
4 20822
6 20822
27 20822
52 20822
211 25600
212 ....25600, 25606
225 25609
237 25606
245 25600
252 ....25600, 25606, 25609
727 22990
742 22990
752 22990
3015 22992
3016 22992
3052 22992

49 CFR

192 24708

Proposed Rules:

107 25335
171 25335
172 25335
173 25335
178 25335
180 25335
216 19730
231 19730
238 19730
513 23276
571 24535
673 25336

50 CFR

17 ....19549, 19880, 20410, 21844, 24712, 25208, 25512, 25543
18 24115
218 24058
300 21503
622 ....20079, 24921
648 ....19559, 21927, 21930, 24494, 24713, 25557
660 21112
679 ....20080, 22917

Proposed Rules:

17 ....21582, 22530, 25613
217 22696
223 21600
224 ....20829, 20846
226 21600
300 22992
622 ....20453, 24746
648 ....20015, 23611, 25351
660 ....20456, 20457

LIST OF PUBLIC LAWS

Note: No public bills which have become law were received by the Office of the Federal Register for inclusion in today's **List of Public Laws**.

Last List April 12, 2023

Public Laws Electronic Notification Service (PENS)

PENS is a free email notification service of newly enacted public laws. To subscribe, go to *https://portalguard.gsa.gov/—layouts/PG/register.aspx.*

Note: This service is strictly for email notification of new laws. The text of laws is not available through this service. **PENS** cannot respond to specific inquiries sent to this address.