CONSUMER PRODUCT SAFETY COMMISSION

16 CFR Parts 1112 and 1260

[CPSC Docket No. CPSC–2013–0028]

Safety Standard for Operating Cords on Custom Window Coverings

AGENCY: Consumer Product Safety Commission.

ACTION: Final rule.

SUMMARY: The U.S. Consumer Product Safety Commission (Commission or CPSC) has determined that custom window coverings with accessible operating cords longer than 8 inches pose an unreasonable risk of strangulation to children 8 years old and younger. To address this risk of strangulation, the Commission is issuing a final rule under the Consumer Product Safety Act (CPSA) to require that operating cords on custom window coverings meet the same requirements as operating cords on stock window coverings, as set forth in the applicable voluntary standard. The final rule provides several methods to make window covering cords inaccessible or non-hazardous. Because this is a consumer product safety rule, operating cords on custom window coverings must be tested and certified as meeting the requirements of the final rule. Custom window coverings that meet the definition of a ''children's product'' require third party testing by a CPSC-accepted third party conformity assessment body. Accordingly, the final rule also amends the Commission's regulation that lists children's product rules requiring third party testing.

DATES: The effective date of the rule is May 30, 2023, and the rule will apply to all custom window coverings manufactured after that date. The incorporation by reference of the publication listed in this rule is approved by the Director of the Federal Register as of May 30, 2023.

FOR FURTHER INFORMATION CONTACT: Jennifer Colten, Compliance Officer, Office of Compliance and Field Operations, Consumer Product Safety Commission, 4330 East West Highway; telephone: 301–504–8165; *jcolten@cpsc.gov.*

SUPPLEMENTARY INFORMATION:

I. Introduction

On January 7, 2022, the Commission published a notice of proposed rulemaking (NPR) to regulate operating cords on custom window coverings. 87 FR 1014 (Jan. 7, 2022). The Commission received over 2000 comments on the proposed rule and, on March 16, 2022, held a public hearing to receive oral comments on the proposed rule.[1] 87 FR 8441 (Feb. 15, 2022).[2] As described in this preamble, after consideration of the comments, the Commission is now finalizing the rule.[3] The final rule is generally consistent with the NPR, but provides two methods to make operating cords inaccessible under the rule (using a rigid cord shroud or a retractable cord), and allows use of a loop cord and bean chain restraining device to prevent formation of hazardous loops. The final rule is based on information and analysis contained in CPSC staff's September 29, 2021, Staff Briefing Package: Notice of Proposed Rulemaking for Corded Window Coverings (Staff's NPR Briefing Package),[4] and on information in staff's September 28, 2022, Staff Briefing Package: Draft Final Rules for Corded Window Coverings (Staff's Final Rule Briefing Package).[5]

A. Overview of the Final Rule

The purpose of the final rule is to address the unreasonable risk of strangulation to children 8 years old and younger associated with hazardous operating cords on custom window coverings. The Commission issues this final rule pursuant to sections 7 and 9 of the CPSA, 15 U.S.C. 2056 and 2058, to create a new mandatory standard for operating cords on custom window coverings. The Commission finds that this rule is reasonably necessary to address an unreasonable risk of death and serious injury to children 8 years old and younger associated with corded custom window coverings, due to the ongoing fatal and nonfatal incidents, the high severity of the outcomes (death and disability to children), the availability of cost-effective technologies that address the hazard, and the inadequacies of parental supervision, warnings, education campaigns, external safety devices for this class of products, and the existing voluntary standard for custom products.

The final rule is designed to eliminate the ongoing tragedy of child deaths on corded custom window coverings. The Commission is aware of 209 fatal and near-miss strangulations on window covering cords that occurred among children 8 years old and younger from January 2009 through December 2021. The industry has been long aware of the strangulation hazard and how to address these deaths and injuries, by removing accessible cords from window coverings. Finally, in 2018, after more than 20 years of consideration, the voluntary standards committee revised the voluntary standard to eliminate the strangulation hazard on stock window coverings. After this change in the market, sales of stock products increased, even though the prices of stock products in some cases doubled.

The final rule will extend the requirements for stock products to custom window coverings. Staff estimates that compliance with the final rule will result in a net increase of as little as $24 per household every approximately 10 years when consumers replace all custom window coverings in their home. *See* Table 9, *infra,* and Tab F of Staff's Final Rule Briefing Package. This price increase represents only about 5% of the total costs of replacing all custom window coverings. *Id.* The Commission expects that the custom window covering market will absorb this cost, just as seen in the stock window covering market. This fact is also observed in the Canadian window covering market. Canada implemented a rule earlier this year that eliminates hazardous cords on all window covering products, and the market has reacted with cost-effective substitutes and redesigned products.

The final rule is consistent with the proposed rule, by requiring operating cords on custom window coverings to meet identical requirements for operating cords on stock window coverings, as set forth in section 4.3.1 of ANSI/WCMA A100.1—2018, American National Standard for Safety of Corded

[1] Video available at: *https://www.youtube.com/watch?v=ggbi6Tm5egA;* Transcript available at: *https://www.regulations.gov/document/CPSC-2013-0028-3663.*

[2] On March 2, 2022, the Commission voted to deny a February 11, 2022 request by the Window Covering Manufacturers Association (WCMA), to extend the comment period for this rulemaking by 75 days. The staff's package explaining WCMA's request is available at: *https://www.cpsc.gov/s3fs-public/NPR-for-Operating-Cords-on-Custom-Window-Coverings-Notice-of-Extension-of-Comment-Period.pdf?VersionId=AHlkvtMCFUiY21f3.fCcNfILlqcTCstT.* A Record of Commission Action on the request is available at: *https://www.cpsc.gov/s3fs-public/RCA-Safety-Standard-for-Custom-Window-Coverings-Notice-of-Extension-of-Comment-Period.pdf?VersionId=.YvybvKXK8VfmPx8GFqgcHH7t3E7ggS6.* Although the Commission denied the comment period extension, the Commission has received and considered all late-filed comments for this rulemaking.

[3] On November 2, 2022, the Commission voted 4–0 to publish this final rule, and each Commissioner issued a statement in connection with their vote.

[4] Available at: *https://www.cpsc.gov/s3fs-public/NPRs-Add-Window-Covering-Cords-to-Substantial-Product-Hazard-List-Establish-Safety-Standard-for-Operating-Cords-on-Custom-Window-Coverings-updated-10-29-2021.pdf?VersionId=HIM05bK3WDLRZrlNGogQLknhFvhtx3PD.*

[5] Available at: *https://www.cpsc.gov/s3fs-public/Final-Rules-to-1-Add-Window-Covering-Cords-to-the-Substantial-Product-Hazard-List-and-2-Establish-a-Safety-Standard-for-Operating-Cords-on-Custom-Window-Coverings.pdf?VersionId=nDxz9G5hfDy5k.SnXkqgGKLiDsMK4hpe.*

Window Covering Products (ANSI/WCMA–2018). Section 4.3.1 of ANSI/WCMA–2018 requires stock window coverings to have:

(1) no operating cords (cordless) (section 4.3.1.1);

(2) inaccessible operating cords (section 4.3.1.3); or

(3) operating cords equal to or shorter than 8 inches in any use position (section 4.3.1.2).

The proposed rule provided requirements for one method, a rigid cord shroud, for manufacturers to make operating cords inaccessible, to comply with section 4.3.1.3.

Based on review and consideration of the public comments, the Commission is providing requirements for an additional method to meet the ''inaccessible'' requirement under section 4.3.1.3 in the final rule, a retractable cord, as long as it meets the performance requirements in the rule. The final rule does not preclude manufacturers from developing new methods of meeting the ''inaccessible'' requirement in section 4.3.1 of ANSI/WCMA–2018. However, if manufacturers choose to use a rigid cord shroud or a retractable cord, these devices must meet the requirements in the final rule. The final rule also contains requirements for one method to make accessible continuous loops non-hazardous: loop cord and bead chain restraining devices. ANSI/WCMA–18 and the draft ANSI/WCMA A100.1—2022, American National Standard for Safety of Corded Window Covering Products (draft ANSI/WCMA–2022), allow these three methods to make cords non-hazardous, with different requirements from the final rule. Hundreds of commenters requested that we allow these options to remain for custom products. These methods are allowed in the final rule provided that they meet durability requirements.

This final rule addresses the unreasonable risk of injury associated with operating cords on custom window coverings. In a separate, concurrent rulemaking under section 15(j) of the CPSA, under CPSC Docket No. CPSC–2021–0038, the Commission is finalizing a rule to deem a ''substantial product hazard'' (SPH), as defined in section 15(a)(2) of the CPSA: (1) the presence of hazardous operating cords on stock window coverings; (2) the presence of hazardous inner cords on stock and custom window coverings; or (3) the absence of a required manufacturer label on stock and custom window coverings.[6]

B. Background and Statutory Authority

Window coverings are ''consumer products'' within the jurisdiction of the CPSC, and subject to regulation under the authority of the CPSA. *See* 15 U.S.C. 2052(a)(5). The final rule applies to all custom window coverings used in residences, in schools, or elsewhere, as long as consumers have access to the window covering and are subject to a strangulation hazard. *Id.* Section 7(a) of the CPSA authorizes the Commission to promulgate this final rule which sets forth performance requirements that are reasonably necessary to prevent or reduce an unreasonable risk of injury or death associated with operating cords on custom window coverings. 15 U.S.C. 2056(a).

Incident data demonstrate that children can strangle on accessible window covering cords that are long enough to wrap around their neck. Accordingly, the performance requirements in the final rule require that operating cords on custom products meet the requirements for stock window coverings in section 4.3.1 of ANSI/WCMA–2018, to prevent an unreasonable risk of injury, strangulation, and death, to children 8 years old and younger, and provides several methods to make operating cords inaccessible or non-hazardous. Options to eliminate cords or to make cords inaccessible must be integrated with the product as sold, so that the safety of custom window coverings does not rely on the installation of external safety devices (*i.e.,* cord tension device) by a consumer or an installer.

Section 7(b)(1) of the CPSA requires the Commission to rely on a voluntary standard, rather than promulgate a mandatory standard, when compliance with the voluntary standard would eliminate or adequately reduce the risk of injury associated with a product, and it is likely that products will be in substantial compliance with the voluntary standard. 15 U.S.C. 2056(b)(1). As described in section II.F of this preamble, the Commission finds that custom window coverings substantially comply with the voluntary standard, ANSI/WCMA–2018. However, as reviewed in the NPR, section 4.3.2 of ANSI/WCMA–2018 that applies to custom window coverings, does not adequately address the risk of injury associated with operating cords on custom window coverings because it allows for the sale of custom window coverings equipped with hazardous operating cords. 87 FR 1030–32. A hazardous cord is one that is not compliant with section 4.3.1 of ANSI/WCMA–2018, which requires that products be cordless, use cords that are inaccessible to children, or use cords that are short (equal to or less than 8 inches) to prevent children from wrapping a cord around their neck. The NPR explained that the requirements in the rule would address 100 percent of the known operating cord incidents associated with custom window coverings. *Id.* at 1031.

Section 9 of the CPSA specifies the procedure that the Commission must follow to issue a consumer product safety standard under section 7 of the CPSA. The Commission may commence rulemaking by issuing either an advance notice of proposed rulemaking (ANPR) or an NPR. The Commission issued an ANPR for corded window coverings, including stock and custom products, in January 2015 (80 FR 2327 (January 16, 2015)). Subsequently, in January 2022, the Commission issued two NPRs. The Commission issued an NPR under section 15(j) of the CPSA for the hazards addressed by ANSI/WCMA–2018, including operating and inner cords on stock window coverings, and inner cords on custom window coverings (87 FR 891 (Jan. 7, 2022)), and issued an NPR under sections 7 and 9 of the CPSA to address operating cords on custom window coverings (87 FR 1014 (Jan. 7, 2022)).

As required in section 9 of the CPSA, in the NPR for custom window coverings, the Commission requested comment on the risk of injury identified by the Commission, the regulatory alternatives being considered, and other possible alternatives for addressing the risk of injury. The Commission also requested comments on the preliminary findings included in the proposed rule. *Id.* at 1053–54. Section III of this preamble summarizes and responds to the comments received on the NPR.

C. Product Description

1. Overview of Window Covering Products

The NPR describes the types of custom window coverings in use and the types of operating cords and systems for custom window coverings. 87 FR 1015–18. Window coverings include a

[6] The preamble to the rule under section 15(j) explains that the voluntary standard adequately addresses operating cord hazards associated with stock window coverings, and inner cord hazards associated with both stock and custom window coverings. Note that unlike with custom window coverings, ANSI/WCMA–2018 does not include requirements for additional methods for stock products to meet section 4.3.1, and most stock products use manual lifting to comply with the voluntary standard. Regardless, the rule under section 15(j) of the CPSA does not preclude manufacturers from innovating compliance methods, as long as the products meet the operating cord requirements in section 4.3.1 of ANSI/WCMA–2018.

wide range of products, including shades, blinds, curtains, and draperies. A cord or loop used by consumers to manipulate a window covering is called an ''operating cord'' and may be in the form of a single cord, multiple cords, or continuous loops. ''Cordless'' window coverings are products designed to function without an operating cord, but they may contain inner cords. Figures 1 through 6 explain window covering terminology and show examples of different types of window coverings.

BILLING CODE 6355–01–P

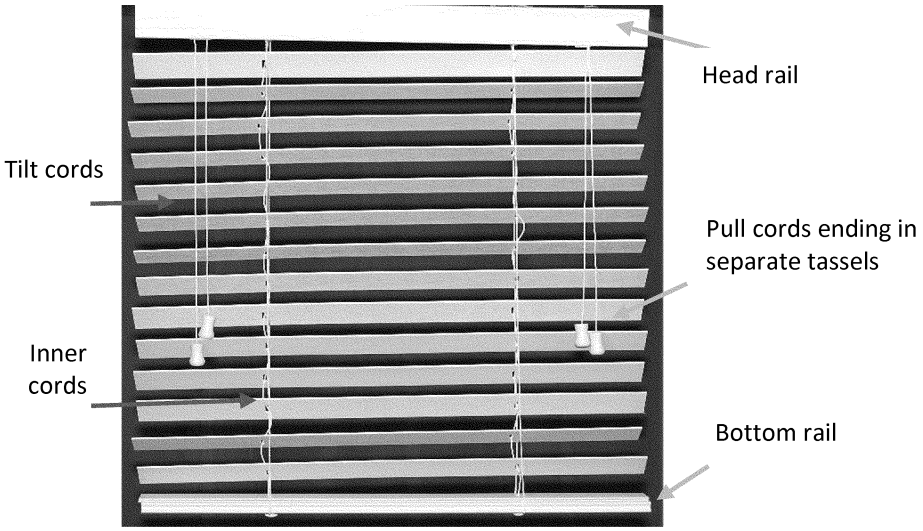

Figure 1. Horizontal blind

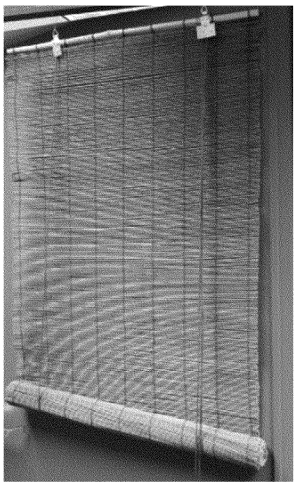

Figure 2. Roll-up shade with lifting loops

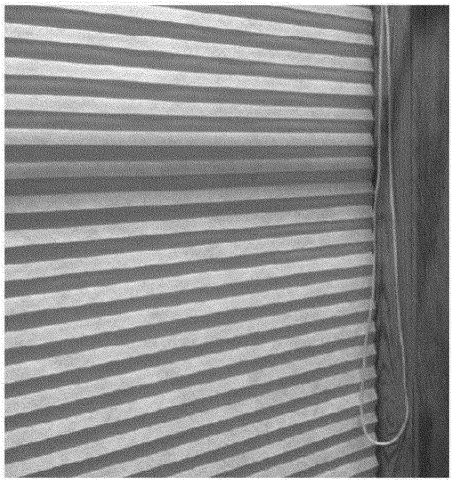

Figure 3. Cellular shade with looped operating cord

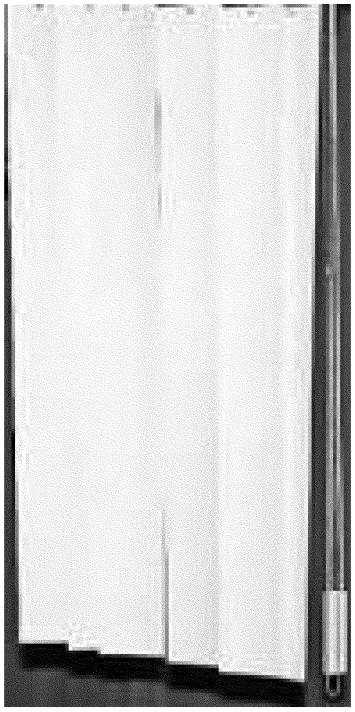

Figure 4. Vertical blind

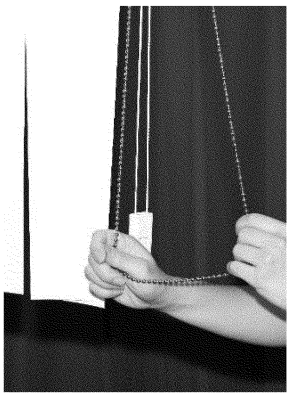

Figure 4a. Close-Up View Vertical blind

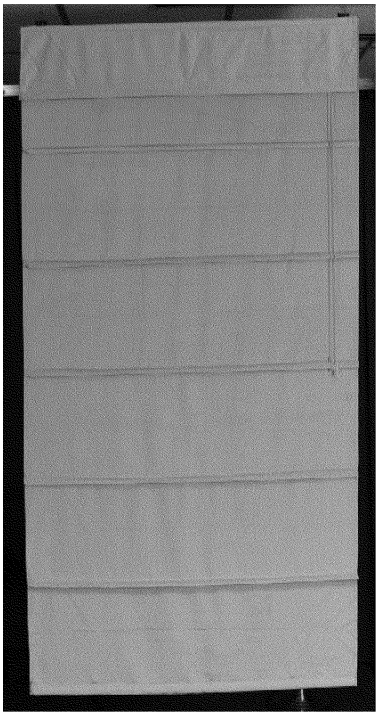

Figure 5. Roman shade

Figure 6. Cordless horizontal blind

BILLING CODE 6355–01–C

Figure 1 shows a horizontal blind containing inner cords, operating cords, and tilt cords. Figure 2 shows a roll-up shade containing lifting loops and operating cords. Figure 3 shows a cellular shade with inner cords between two layers of fabric and operating cords. Figure 4 shows a vertical blind with a looped operating cord to traverse the blind and a looped bead chain to tilt the vanes. Figure 4a, a close-up view of Figure 4, shows two continuous loop operating cords on the same blind; one cord tilts the slats to open and close the blind, and the other cord traverses the blind. Figure 5 shows a Roman shade with inner cords that run on the back side of the shade and operating cords. Figure 6 is a horizontal blind that is marketed as ''cordless'' because it has no operating cords, but it still contains inner cords. Window covering operating systems can vary slightly by window covering type, but all operating systems fit into one of two general categories: corded or cordless.

2. Corded Window Coverings

''Traditional'' or ''corded'' shades and blinds generally have cords located inside the product (inner cord), to the side of the product (operating cord or outer cord), or both. The inner cords between the head rail and bottom rail lift the horizontal slats to adjust light coming through, as in the case of horizontal blinds, or lift fabric and similar materials, as in the case of Roman or pleated shades. The outer cord or operating cord allows the user to raise, lower, open and close, rotate, or tilt the window covering. Operating cord systems generally fall into one of three categories: (1) standard; (2) single cord; and (3) continuous loop. The operating cord in a standard operating system consists of two or more cords and often includes a cord locking device to allow the user to set the height of the window covering. In a single cord operating system, the user can manipulate the window covering with a pull cord. The operating cord in a continuous loop operating system uses a single piece of cord or a beaded metal or plastic chain that is secured to a wall and operates like a pulley. For example, pulling down the rear half of the loop will lower the shade, while pulling down the front half of the loop will raise the shade.

3. Cordless Window Products

Virtually every window covering type is available with a ''cordless'' operating system, which means it has been designed to function without an operating cord.[7] Cordless window coverings may require inner cords, but these can be, and typically are, made inaccessible. In lieu of an operating cord, cordless operating systems can be manual or motorized. A manual operating system allows users to lift or lower the window covering with a handle or directly by hand. A motorized operating system uses a motor and control system to manipulate the window covering, such as a remote control or wall switch. Installation of cordless window coverings that are motorized is more complicated than manual systems because motorized systems require a power source.

4. Other Types of Safety Devices

The NPR reviewed safety devices some manufacturers use to isolate operating cords to make them safer, and assessed whether these methods address the strangulation risk. 87 FR 1018–19. Alternative safety devices include, among others: retractable cords, cord cleats, cord shrouds, cord condensers, and wands. Tab I in Staff's NPR Briefing Package contains a more detailed description of these devices. In the NPR, the Commission preliminarily found that these devices, as addressed in ANSI/WCMA–2018, are inadequate to address the risk of injury associated with operating cords on custom window products. *Id.* However, the Commission requested comment on several methods used to make operating cords inaccessible, including rigid cord shrouds, a method included in the NPR, as well as retractable cords and cord and bead chain restraining devices. 87 FR 1054.

Based on the comments received, and as discussed in section II of this preamble, the final rule includes additional methods to address the strangulation risk, including retractable cords and loop cord and bead chain restraining devices. In the final rule the Commission strengthens durability and performance requirements for these additional methods, to address the public comments and to ensure that use of safety devices does not introduce new hazards, such as from broken parts. These additional compliance methods allow for products that have one-handed operation and do not limit consumer accessibility to window coverings, but still eliminate the strangulation hazard.

5. ''Stock'' and ''Custom'' Window Coverings Defined in the NPR

Like the NPR, this final rule relies on the definitions of window coverings and their features as set forth in the ANSI/WCMA–2018 standard, which requires ''stock'' and ''custom'' window coverings to meet different sets of operating cord requirements. 87 FR 1019. The final rule uses the same definition of a ''stock window covering'' as the NPR, and has the same meaning as the definition of ''Stock Blinds, Shades, and Shadings'' in section 3, definition 5.02 of ANSI/WCMA–2018. A ''stock widow covering'' is a completely or substantially fabricated product prior to being distributed in commerce. Even when the seller, manufacturer, or distributor modifies a pre-assembled product, by adjusting to size, attaching the top rail or bottom rail, or tying cords to secure the bottom rail, the product is still considered ''stock,'' as defined in ANSI/WCMA–2018. Moreover, under the ANSI standard, online sales of a window covering, or the size of the order, such as multifamily housing orders, do not make the product a non-stock product. ANSI/WCMA–2018 provides these examples to clarify that, as long as the product is ''substantially fabricated'' prior to distribution in commerce, subsequent changes to the product do not change its categorization from ''stock'' to ''custom.''

The final rule also defines a ''custom window covering'' using the same definition of ''Custom Blinds, Shades, and Shadings'' found in section 3, definition 5.01 of ANSI/WCMA–2018, which is ''any window covering that is not classified as a stock window covering.'' The final rule also includes definitions of ''operating cord,'' ''cord shroud,'' ''rigid cord shroud,'' and ''retractable cord,'' as described in section IV.A of this preamble.

[7] The availability of alternatives to corded window coverings may sometimes be constrained due to size and weight limitations. *See* Lee, 2014. Through market research, staff found several examples of cordless blinds that are made with a maximum height of 84″ and a maximum width of 144″ (Tab G of Staff's NPR Briefing Package).

6. The Window Covering Industry

The total U.S. window covering market size in 2021 was approximately $6.7 billion [8] (Euromonitor 2022a). CPSC staff estimates that firms classified as small by Small Business Administration (SBA) guidelines account for $3.9 billion annually, and that none of these firms account for more than three percent of total market share by revenue (Euromonitor 2022b). The NPR reviewed that, based on 2017 data, 1,898 firms were categorized as blinds and shades manufacturers and retailers (Census Bureau, 2020). 87 FR 1019. Of these, about 1,840 firms (302 manufacturers and 1,538 retailers) are small. In 2020, three manufacturers accounted for almost 38 percent of dollar sales in the U.S. window coverings market (Euromonitor 2021a). Only one of these manufacturers is a publicly held firm. In 2020, the largest global manufacturer and distributor of window coverings reported worldwide net sales of $3.5 billion, with North American window covering sales reported as $1.7 billion. The second largest firm is privately held, and annual reports are not publicly available. Estimates of this firm's revenue indicate annual U.S. window covering revenue in 2020 of approximately $728 million (Euromonitor 2021a). The third firm is also privately held, and estimates indicate U.S. window covering revenues in 2020 of approximately $88 million (Euromonitor 2021a). The remainder of the total market size of $6.6 billion is attributed to firms that each account for less than 3 percent market share (Euromonitor 2021b). *Id.*

A recent study conducted for CPSC (D+R International 2021) estimated that in 2019, approximately 139 million residential window coverings were shipped in the United States. Most of these shipments, 59.2 percent, were blinds, while 25.4 percent were shades. When comparing unit sales data to revenue data, CPSC staff found that while custom products account for approximately 44 percent of unit sales, a disproportionate amount of revenue is attributable to custom window covering products. For example, Roman shades, which are sold almost always as custom window covering products, account for 1.9 percent of annual sales in 2019, but generated revenues equal to 2.3 percent of the total.

7. Retail Prices

As reviewed in the NPR, retail prices for window coverings vary, depending on the type of the product and retailer. 87 FR 1019; Tab F of the Final Rule Briefing Package. According to a D+R International (2021) study, average prices for window coverings range from $54 to $94 for shades and from $25 to $250 for blinds.[9] Prices for vertical blinds are generally lower than the prices of horizontal blinds; prices for roller shades are slightly lower than the prices of Roman and cellular shades (D+R International 2021).[10]

Consumers can purchase custom sized and custom designed window coverings from mass merchants, specialty retailers, e-commerce retailers, and in-home consultation firms. Custom coverings include uncommon window covering sizes, such as extremely small (*e.g.,* 9 inches wide × 13 inches high), extremely large (*e.g.,* 96 inches wide × 96 inches high), and other unusual sizes. Retail prices for custom made window coverings can be as high as $5,000.[11] Retailers often suggest in-home measuring and evaluation to estimate the price for custom designed products, as non-standard sizes or window shapes or motorized lift systems can require professional installation. Prices for customized window coverings are on average higher than similar stock products sold by mass retailers.

8. Window Coverings in Use

CPSC staff calculated an estimate of the number, and statistical distribution, of custom window coverings in use using CPSC's Product Population Model (PPM).[12] Tab F of the Staff Final Rule Briefing Package. The PPM is a statistical model that projects the number of products in use given estimates of annual product shipments/unit sales and information on product failure rates over time. Using the annual unit shipment estimates from the D+R International (2021) report, along with estimates on the number of corded products sold/in use, estimates for the share of custom products sold/in use, and estimates of the expected product life for window coverings by type provided by WCMA, staff estimates approximately 145 million corded custom window coverings in use in the United States in 2020. Table 1 shows the breakdown and calculation of estimated *corded custom* products in use, by type.

TABLE 1—ESTIMATES OF THE NUMBER OF CORDED CUSTOM WINDOW COVERINGS IN USE

	[1]	[2]	[3]	[4]	[5]
	Number of products in use (millions)	% of custom products in use (WCMA 2022a)	% of corded products (WCMA 2022b)	Expected product life (WCMA 2022b)	Number of corded custom products in use (millions)
Horizontal Blinds	474.24				76.02
Vinyl/Metal	251.35	20	91.9	6.7	46.20
Wood/Faux Wood	222.89	20	66.9	10.8	29.82
Shades	280.36				22.67
Cellular	94.46	20	21.0	7.2	3.97
Pleated	40.66	20	31.0	7.5	2.52
Roman	23.29	20	41.2	8.75	1.92
Roller	84.27	20	57.3	7.2	9.66
Soft Sheer	37.69	20	61.1	7.2	4.61
Vertical Blinds	177.84	20	64.8	7.6	23.05
Curtains/Drapery	212.59	20	54.4	15	23.13
Total	1,145.03				144.87

[8] Stock window coverings most likely account for a minority of the total market size in terms of revenue due to significant average price differences between stock and custom products (D+R International 2021).

[9] The range for shades is based on average prices for cellular shades, roller shades, Roman shades, and pleated shades. The range for blinds is based on average prices for vinyl blinds, metal blinds, faux-wood blinds, wood blinds, and vertical blinds.

[10] The D+R review of prices and product availability found that stock product prices are generally lower than custom products and that cordless lift systems resulted in an increase in price except in the case of vertical blinds.

[11] Based on firms' websites, retail prices for custom-made Roman shades can range from $300–$5,000.

[12] Lahr, M.L., Gordon, B.B., 1980. Product life model feasibility and development study. Contract CPSC–C–79–009, Task 6, Subtasks 6.01–6.06. Columbus, OH: Battelle Laboratories.

D. Hazards Associated With Window Covering Cords

Window covering cords, including operating cords (meaning pull cords and continuous loop cords), inner cords, and lifting loops, can pose strangulation hazards to children when they are accessible and long enough to wrap around a child's neck. Figures 7, 8, and 9 below depict the strangulation hazard for different window covering cord types.

BILLING CODE 6355–01–P

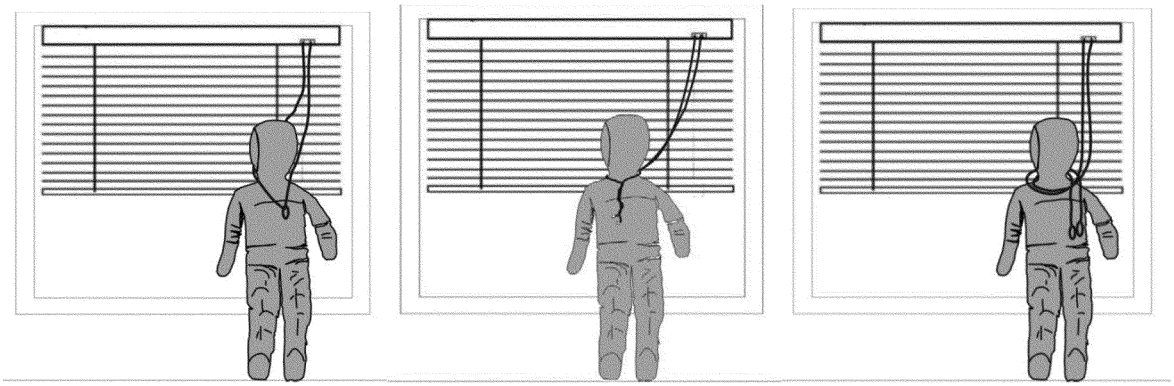

Figure 7. (a) Operating pull cords ending in one tassel (left); (b) operating cords tangled, creating a loop (middle); (c) operating cords wrapped around the neck (right)

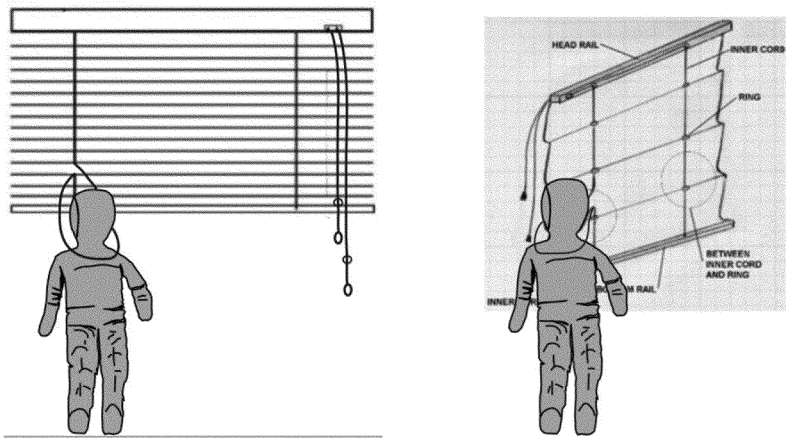

Figure 8. (a) Inner cords creating a loop (left), (b) Inner cords on the back side of Roman shade (right)

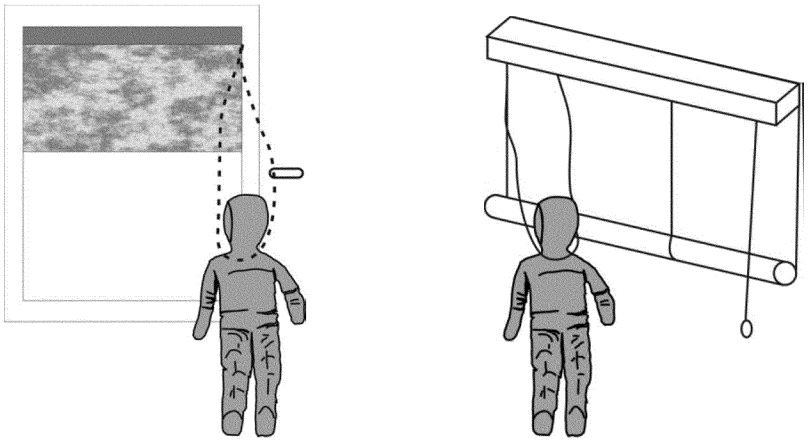

Figure 9. (a) Continuous loop cord (left), (b) Lifting loop on roll-up shade (right)

BILLING CODE 6355–01–C

Children can strangle from mechanical compression of the neck when they place a window covering cord around their neck. Strangulation due to mechanical compression of the neck is a complex process resulting from multiple mechanisms and pathways that involve both obstruction of the airway passage and occlusion of blood vessels in the neck. Strangulation can lead to serious injuries with permanent debilitating outcomes or death. If sustained lateral pressure occurs at a level resulting in vascular

occlusion, strangulation can occur when a child's head or neck becomes entangled in any position, even in situations where the body is fully or partially supported.

Strangulation is a form of asphyxia that can be partial (hypoxia), when there is an inadequate oxygen supply to the lungs, or total, when there is complete impairment of oxygen transport to tissues. A reduction in the delivery of oxygen to tissues can result in permanent, irreversible damage. Experimental studies show that as little as 2 kg (4.4 lbs.) of pressure on the neck may occlude the jugular vein (Brouardel, 1897); and 3 kg to 5 kg (7–11 lbs.) may occlude the common carotid arteries (Brouardel, 1897 and Polson, 1973). Minimal compression of any of these vessels can lead to loss of consciousness within 15 seconds and death in 2 to 3 minutes (Digeronimo and Mayes, 1994; Hoff, 1978; Iserson, 1984; Polson, 1973).

The vagus nerve is also located in the neck near the jugular vein and carotid artery. The vagus nerve is responsible for maintaining a constant heart rate. Compression of the vagus nerve can result in cardiac arrest due to mechanical stimulation of the carotid sinus-vagal reflex. In addition, the functioning of the carotid sinuses may be affected by compression of the blood vessels. Stimulation of the sinuses can result in a decrease in heart rate, myocardial contractility, cardiac output, and systemic arterial pressure in the absence of airway blockage.

Strangulation proceeding along one or more of these pathways can progress rapidly to anoxia, associated cardiac arrest, and death. As seen in the CPSC data (Wanna-Nakamura, 2014), and in the published literature, neurological damage may range from amnesia to a long-term vegetative state. Continued deterioration of the nervous system can lead to death (Howell and Gully, 1996; Medalia *et al.,* 1991).

Because a preexisting loop acts as a noose when a child's neck is inserted, and death can occur within minutes of a child losing footing, CPSC staff concluded that head insertion into a preexisting loop poses a higher risk of injury than when a child wraps a cord around his or her neck. However, both scenarios have been demonstrated to be hazardous and have led to fatal outcomes, according to CPSC data.

Based on the data, the Commission also concludes that reliance on parental supervision and warning labels are inadequate to address the risk of injury associated with window covering cords. As reviewed in the NPR, a user research study found that caregivers lacked awareness regarding the potential for window covering cord entanglement; lacked awareness of the speed and mechanism of the strangulation injury; identified difficulty using and installing safety devices for window coverings among the primary reasons for not using them; and were unable to recognize the purpose of the safety devices provided with window coverings (Levi *et al.,* 2016).[13] According to Godfrey *et al.* (1983), consumers are less likely to look for and read safety information about the products that they frequently use and are familiar with. Consumers almost certainly have window coverings in their homes and may use them daily. Therefore, even well-designed warning labels will have limited effectiveness in communicating the hazard on this type of product.

Based on the foregoing, the Commission finds that warning labels are unlikely to effectively reduce the strangulation risk from hazardous cords on window coverings, because consumers are not likely to read and follow warning labels on window covering products, and strangulation deaths among children occur quickly and silently, such that parental supervision is insufficient to address the incidents. Indeed, staff observed that most of the window covering units involved in incidents had the permanent warning label required by the ANSI/WCMA standard affixed to the product. Even well-designed warning labels will have limited effectiveness in communicating the hazard on this type of product, because consumers are less likely to heed warnings for familiar products that they commonly interact with without incident.

In contrast to requirements for custom window coverings in ANSI/WCMA–2018, stock window covering requirements in the ANSI/WCMA standard adequately address the strangulation hazard, by not allowing hazardous cords on these products; stock window covering requirements do not rely on consumer action to address the risk of strangulation. Stock window coverings that comply with the ANSI/WCMA standard inherently minimize strangulation risk as sold because no consumer or installer action is required to protect against strangulation of children. Accordingly, the Commission concludes that the risk of injury associated with custom window coverings must be addressed through performance requirements for these products, to ensure that custom window coverings are as safe as stock window coverings for children 8 years old and younger.

E. Risk of Injury

The incident data demonstrate that regardless of whether a product is categorized as stock or custom, children are exposed to the same risk of strangulation from accessible window covering cords. For the NPR, the Commission presented window covering cord incidents occurring from 2009 through 2020.[14] 87 FR 1022–27. Since extracting data for the NPR, CPSC has received reports of 15 additional incidents. Tab A of Staff's Final Rule Briefing Package details this new incident data. The following analysis is based on incidents received from 2009 through 2021, and distinguishes between stock and custom window coverings whenever feasible.

1. Incident Data From CPSC Databases

Based on newspaper clippings, consumer complaints, death certificates purchased from states, medical examiners' reports, reports from hospital emergency department-treated injuries, and in-depth investigation reports, CPSC staff found a total of 209 reported fatal and near-miss strangulations on window covering cords that occurred among children 8 years old and younger from January 2009 through December 2021. These 209 incidents do not necessarily include all window covering cord-related strangulation incidents that occurred during that period, and recent data, particularly for 2021, may be incomplete. However, these 209 incidents do provide a minimum number for such incidents during that time frame.

Table 2a provides the breakdown of the incidents by year. Totals include new incidents received after the NPR data analysis, which are noted in parentheticals below. Because reporting is ongoing and the number of incidents may grow, and because these reports are anecdotal, inferences should not be drawn from the year-to-year variations in the reported data.

[13] *https://cpsc.gov/s3fs-public/Window%20Coverings%20Safety%20Devices%20Contractor%20Reports.pdf.*

[14] CPSC staff searched three databases for identification of window covering cord incidents: the Consumer Product Safety Risk Management System (CPSRMS), the National Electronic Injury Surveillance System (NEISS), and the Multiple Cause of Deaths data file (further information can be found at *https://wonder.cdc.gov/mcd-icd10.html*). The first two sources are CPSC-maintained databases. The Multiple Cause of Deaths data file is available from the National Center for Health Statistics (NCHS).

TABLE 2a—REPORTED FATAL AND NEAR-MISS STRANGULATION INCIDENTS INVOLVING WINDOW COVERING CORDS AMONG CHILDREN EIGHT YEARS AND YOUNGER 2009–2021

Incident year	Number of reported incidents		
	Total	Fatal strangulations	Near-miss strangulations
2009	48	14	34
2010	31	11	20
2011	10	6	4
2012	17	8	9
2013	9	2	7
2014	17	12	5
2015	9	7	2
2016	17	13	4
2017	10 (1)	5	5 (1)
2018	8	4	4
2019	11	4	7
*2020 **	13 (5)	8 (5)	5
*2021 **	9 (9)	6 (6)	3 (3)
Total	209 (15)	100 (11)	109 (4)

Source: CPSC epidemiological databases CPSRMS and NEISS. Data in ( ) indicate the number of new incidents received since the NPR data analysis.
Note: * indicates data collection is ongoing.

Among the 15 newly reported incidents, staff identified 11 fatalities (73 percent) and 4 non-hospitalized injuries (27 percent). The non-hospitalized injuries resulted in lacerations and abrasions.

Table 2b expands on Table 2a to display the distribution of the annual incidents by severity of incidents and type of window coverings involved. CPSC staff identified 50 of 209 incident window coverings (24 percent) to be stock products, and 36 of the 209 (17 percent) window coverings as custom products. Where staff could identify a product type, custom products made up 42% (36 out of 86) of the incident products. CPSC staff could not identify the window covering type in the remaining 123 of the 209 incidents (59 percent); 65 of the 123 incidents (53 percent) involving an uncategorized window covering resulted in a fatality.

TABLE 2b—REPORTED FATAL AND NEAR-MISS STRANGULATION INCIDENTS INVOLVING STOCK/CUSTOM/UNKNOWN TYPES OF WINDOW COVERING CORDS AMONG CHILDREN EIGHT YEARS AND YOUNGER 2009–2021

Incident year	Reported incidents by window covering type			
	Stock (fatal/nonfatal)	Custom (fatal/nonfatal)	Unknown (fatal/nonfatal)	All
2009	20 (4/16)	7 (2/5)	21 (8/13)	48
2010	10 (3/7)	7 (2/5)	14 (6/8)	31
2011	2 (1/1)	4 (3/1)	4 (2/2)	10
2012	1 (1/0)	5 (1/4)	11 (6/5)	17
2013	2 (1/1)	3 (1/2)	4 (0/4)	9
2014	3 (2/1)	2 (1/1)	12 (9/3)	17
2015	4 (4/0)	1 (1/0)	4 (2/2)	9
2016	5 (3/2)	4 (3/1)	8 (7/1)	17
2017	2 (1/1)	1 (0/1)	7 (4/3)	10
2018	.....	1 (0/1)	7 (4/3)	8
2019	1(0/1)	.....	10 (4/6)	11
*2020**	.....	1 (1/0)	12 (7/5)	13
*2021**	.....	.....	9 (6/3)	9
Total	50 (20/30)	36 (15/21)	123 (65/58)	209

Source: CPSC epidemiological databases CPSRMS and NEISS.
Note: * indicates data collection is ongoing.

One hundred of the 209 incidents (48 percent) reported a fatality. Among the nonfatal incidents, 16 involved hospitalizations (8 percent). The long-term outcomes of these 16 injuries varied from a scar around the neck, to quadriplegia, to permanent brain damage. One additional child was treated and transferred to another hospital; the final outcome of this patient is unknown. In addition, 79 incidents (38 percent) involved less-severe injuries, some requiring medical treatment, but not hospitalization. In the remaining 14 incidents (7 percent), a child became entangled in a window covering cord, but was able to disentangle from the cord and escape injury. For the incidents identified in the NPR for which gender information is available, 66 percent of the children were males, and 34 percent were females. One incident did not report the child's gender. For the 15 new incidents staff found a similar pattern regarding gender; 62 percent of the victims were male and 38 percent were females.

Table 2c provides a breakdown of the incidents by window covering type. Among the 11 newly reported deaths since the NPR analysis, staff definitively identified the cord type in 6 deaths. Three deaths (27 percent of all newly reported deaths) involved a pull cord, 2 deaths (18 percent) involved a continuous loop, and 1 death (9 percent) involved inner cord(s); staff had insufficient information to determine the cord type involved for the remaining 5 fatal incidents.

TABLE 2c—DISTRIBUTION OF REPORTED INCIDENTS BY TYPES OF WINDOW COVERINGS AND ASSOCIATED CORDS 2009–2021

[Numbers in parentheses indicate new reports received since NPR]

Window covering type	Cord type						
	Pull cord	Continuous loop	Inner cord	Lifting loop	Tilt cord	Unknown	Total
Horizontal	68 (3)	2	4 (1)	0	5	10	89 (4)
Vertical	0	12 (1)	0	0	0	0	12 (1)
Drapery	0	4 (1)	0	0	0	0	4 (1)
Roman	2	2	19	0	0	1	24
Other *	2	5	0	0	0	0	7
Roll-Up	1	0	0	4	0	1	6
Roller	0	9	0	0	0	0	9
Unknown	1	1	0	0	0	56 (9)	58 (9)
Subtotal †	74 (3)	35 (2)	.....	.....	5	68 (9)	182 (14)
Total	74 (3)	35 (2)	23 (1)	4	5	68 (9)	209 (15)

Source: CPSC epidemiological databases CPSRMS and NEISS.
Other *: This category includes cellular and pleated shades.
Subtotal †: This row shows the incidents that are relevant to the section 7&9 rule.

2. Incident Data From National Estimates

(a) Estimates of Window Covering Cord-Related Strangulation Deaths Using National Center for Health Statistics Data

The National Center for Health Statistics (NCHS) compiles all death certificates filed in the United States into multiple-cause mortality data files. The mortality data files contain demographic information on the deceased, as well as codes to classify the underlying cause of death, and up to 20 contributing conditions. The NCHS compiles the data in accordance with the World Health Organization (WHO) instructions, which request member nations to classify causes of death by the current Manual of the International Statistical Classification of Diseases, Injuries, and Causes of Death. Death classifications use the tenth revision of the International Classification of Diseases (ICD), implemented in 1999. For the NPR, 2019 was the latest available year for NCHS data; since then, data for 2020 have become available.

Using the ICD10 code value of W76 (*Other accidental hanging and strangulation*), the code most likely to capture strangulation fatalities among children under 5 (based on empirical evidence from death certificates maintained in CPSC databases), CPSC staff derived fatality estimates for 2009 through 2020, presented in Figure 10 below. An unknown proportion of strangulation deaths is likely coded under ICD10=W75 (*Accidental suffocation and strangulation in bed*) as well as ICD10=W83 (*Other specified threats to breathing*), which staff cannot separate out from the non-strangulation deaths because of the unavailability of any narrative description in these data. Hence, CPSC's estimates of strangulation deaths are minimums.

A 2002 CPSC report by Marcy *et al.*[15] concluded that 35 percent of all strangulation fatalities among children less than 5 years old were associated with window covering cords. Assuming that the same proportion applied for the entire 12-year period 2009–2020, Figure 10 below presents the national estimates for all strangulation fatalities as well as strangulations involving window covering cords among children under 5.

[15] N. Marcy, G. Rutherford. ''Strangulations Involving Children Under 5 Years Old.'' U.S. Consumer Product Safety Commission, December 2002.

Figure 10: Estimated Annual Minimum for Fatal Strangulations Among Children Under Five Years of Age 2009 - 2020

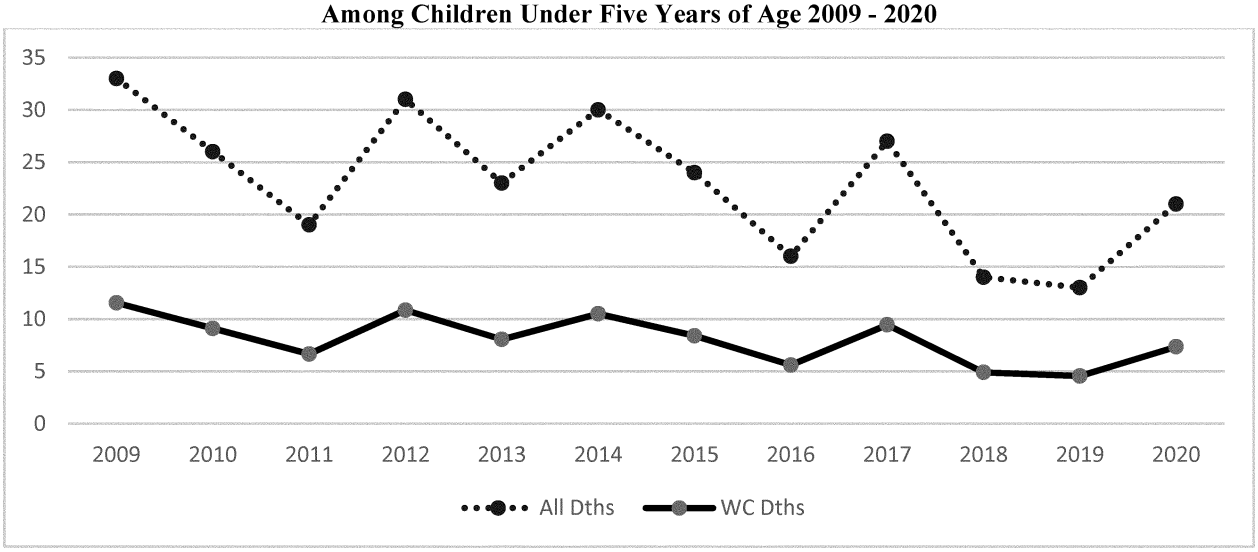

Source: Multiple Cause of Death data, NCHS, 2009 – 2020.
Note: The estimates for the window covering cord fatalities are based on the assumptions that 35% of all strangulation fatalities are due to window covering cords and that this percentage remained unchanged over 2009-2020.

Based on the 2002 study, staff estimates the annual average number of deaths due to window coverings at 8.1.[16] We note that this estimate is consistent with CPSC's actual incident data over a 12 year period. For example, at the time of this final rule analysis, the incidents over the 12-year period 2009–2020 report an average of 7.8 annual deaths involving window covering cords among children under 8 years old.

F. ANSI/WCMA–2018 History and Description

The NPR detailed CPSC staff's decades-long efforts to work with the Window Covering Manufacturers Association beginning in 1995 on an American National Standards Institute voluntary standard to address the strangulation hazard to young children from accessible cords on window coverings. 87 FR 1027–28. Importantly, after several versions of a voluntary standard failed to adequately address the strangulation risk, on January 8, 2018, ANSI published a revision to the window coverings standard, ANSI/WCMA A100.1—2018, that adequately addressed the operating and inner cord strangulation hazard for stock window coverings, and the inner cord hazard for custom products. WCMA updated the 2018 version the standard in May 2018, and the standard went into effect on December 15, 2018. That standard did not, however, adequately address the operating cord hazard for custom products.

ANSI/WCMA–2018 segments the window covering market between ''stock'' and ''custom'' window coverings, as defined in section 3 of the standard, definitions 5.02 and 5.01. Per section 4.3.1 of the standard, stock window coverings are required to have:

(1) no operating cords (4.3.1.1),

(2) inaccessible operating cords (4.3.1.3), or

(3) short operating cords (equal to or less than 8 inches) (4.3.1.2).

Although manufacturers of custom window coverings can opt to meet the operating cord requirements for stock window coverings (sections 4.3.2.1 through 4.3.2.3 for custom window coverings are identical to 4.3.1.1 through 4.3.1.3), ANSI/WCMA–2018 allows the sale of corded window coverings that do not meet this standard, such as on some custom order products (sections 4.3.2.4 through 4.3.2.6). Table 3 demonstrates the operating cord systems allowed on custom window coverings that are prohibited on stock window coverings in ANSI/WCMA–2018.

TABLE 3—ANSI/WCMA–2018 OPERATING AND INNER CORD REQUIREMENTS FOR STOCK AND CUSTOM WINDOW COVERINGS

Performance requirements in ANSI/WCMA A100.1–2018	Assessment of the performance requirement	Stock products	Custom products
1. No operating cords OR	Adequate	Required to have one or more of these options.	Allowed/Not Required.
2. Short cord with a length equal to or less than 8 inches in any state (free or under tension) OR			
3. Inaccessible operating cords.			
4. Inner cords that meet Appendix C and D	Adequate	Required	Required.
5. Manufacturer Label that meets section 5.3	Adequate	Required	Required.

[16] We received a comment critical of CPSC's use of this 2002 study. At this point in time, we are unaware of other data sources that would provide information regarding a more current national trend in window covering cord-related strangulations and the commenter did not provide an alternate data source.

TABLE 3—ANSI/WCMA–2018 OPERATING AND INNER CORD REQUIREMENTS FOR STOCK AND CUSTOM WINDOW COVERINGS—Continued

Performance requirements in ANSI/WCMA A100.1–2018	Assessment of the performance requirement	Stock products	Custom products
6. Single Retractable Cord Lift System (no limit on length of exposed cord when operating).	Inadequate	Prohibited	Allowed/Not Prohibited.
7. Continuous Loop Operating System.			
8. Accessible Operating Cords longer than 8 inches.			

Section 4.3.2 of ANSI/WCMA–2018 contains additional requirements for custom products, including:

(1) operating cords must have a default length of 40 percent of the blind height (previously unlimited) (4.4);

(2) a wand is the default option for tilting slats (instead of a cord) (4.4.1.1); and

(3) warning labels must depict more graphically the strangulation hazard associated with cords (5.1).

Section II of this preamble assesses the adequacy of requirements for operating cords on stock and custom window coverings in ANSI/WCMA–2018 to address the hazards associated with corded window coverings. Based on staff's assessment, the Commission finds that ANSI/WCMA–2018 adequately addresses the risk of strangulation on operating cords for stock window coverings, by removing operating cords, ensuring that they are inaccessible to children, or by making them too short for a child to wrap around his or her neck. However, consistent with Table 3, the Commission finds ANSI/WCMA–2018 does not adequately address the risk of injury associated with operating cords on custom window coverings, because custom products can still be sold to consumers with hazardous operating cords.

G. Development of Draft Revised ANSI/WCMA Voluntary Standard

After the publication of the NPR on January 7, 2022, WCMA brought forth several proposals to revise requirements for custom window covering cords in ANSI/WCMA–2018, resulting in a final draft revision that went to ballot on July 15, 2022.[17] The ballot closed on August 15, 2022. CPSC staff voted negative on the ballot based on staff's analysis of the draft standard. Staff assessed as inadequate to address the risk of injury the requirements for tension devices used with continuous loop operating systems, the requirements for retractable cords, and tests for rigid cord shrouds and loop cord and bead chain restraining devices.[18] Although the draft ANSI/WCMA–2022 has not been adopted, and thus an assessment of this draft is not necessary for this rulemaking, CPSC nonetheless discusses the draft revised standard in section II.D of this preamble, based on Tab I of Staff's Final Rule Briefing Package. The draft ANSI/WCMA–2022 standard improves some requirements for operating cords on custom window coverings, but continues to allow accessible operating cords and loops that are long enough to wrap around a child's neck.

On September 23, 2022, WCMA issued a recirculation ballot due to negative votes cast for the original balloted revisions. In addition to CPSC staff, Consumer Federation of America, Independent Safety Consulting, LLC, and Parents for Window Blind Safety voted negative. As explained in Tab C of Staff's Final Rule Briefing Package, the reballoting does not resolve the concerns identified by CPSC staff.

H. Commission Efforts To Address Hazardous Window Covering Cords

1. Petition and Rulemaking

Since the mid-1990s, CPSC staff has been engaged with the voluntary standards body urging changes to the ANSI/WCMA standard to reduce the risk of injury associated with window covering cords. On October 8, 2014, the Commission granted a petition to initiate a rulemaking to develop a mandatory safety standard for window coverings.[19] The petition sought to prohibit window covering cords when a feasible cordless alternative exists. When a feasible cordless alternative does not exist, the petition requested that all window covering cords be made inaccessible by using passive guarding devices. The Commission granted the petition and published an ANPR seeking information and comment on regulatory options for a mandatory rule to address the risk of strangulation to young children on window covering cords, and then subsequently published two NPRs, under different authorities, to address the risk of injury.

The Commission is now finalizing both rules. The rule under section 15(j) of the CPSA is being finalized as proposed. *See* CPSC Docket Number CPSC–2021–0038. This rule under sections 7 and 9 of the CPSA is being finalized consistent with the NPR, but provides that rigid cord shrouds, retractable cords, and loop cord and bead chain restraining devices are all methods that can be used to make window covering cords inaccessible or non-hazardous. All of these devices are sold integrated with a custom window covering, and contain additional requirements in the final rule to ensure that any cords remain inaccessible or if accessible, non-hazardous, and that the test methods ensure durability over the use of the product.

2. Window Covering Recalls

Since January 1, 2009, CPSC has conducted 42 consumer-level window covering recalls, including two recall reannouncements. Tab C of Staff's NPR Briefing Package provides the details of these 42 recalls, where strangulation was the primary hazard. Manufacturers recalled more than 28 million units,[20] including Roman shades and blinds, roll-up blinds, roller shades, cellular shades, horizontal blinds, and vertical

[17] From December 2021 through May 2022, CPSC staff participated in meetings held by ANSI/WCMA to discuss updating the voluntary standard. Tab C of Staff's Final Rule Briefing Package contains a more detailed description of staff's participation. Meeting logs and staff's correspondence have been placed on the docket for this rulemaking.

[18] CPSC staff letter is available at *https://www.regulations.gov/document/CPSC-2013-0028-3667.*

[19] The petition, CP 13–2, was submitted by Parents for Window Blind Safety, Consumer Federation of America, Consumers Union, Kids in Danger, Public Citizen, U.S. PIRG, Independent Safety Consulting, Safety Behavior Analysis, Inc., and Onder, Shelton, O'Leary & Peterson, LLC. Staff's October 1, 2014 Petition Briefing Package, and a copy of the petition at Tab A, is available on CPSC's website at: *https://www.cpsc.gov/Global/.Newsroom/FOIA/CommissionBriefingPackages/2015/PetitionRequestingMandatoryStandardforCordedWindowCoverings.pdf* on (*cpsc.gov*).

[20] This estimate does not include the recalled units of Recall No. 10–073. This was a December 15, 2009 industry-wide recall conducted by members of the Window Covering Safety Council (WCSC). An exact number of recalled products was not stated in the recall announcements.

blinds. The recalled products also included stock products, which can be purchased off the shelf by consumers, and custom products, which are made-to-order window coverings based on a consumer's specifications, such as material, size, and color.

II. Assessment of Operating Cord Requirements for Stock and Custom Window Coverings

Consistent with the NPR, the final rule requires that operating cords on custom window coverings meet the same requirements as those for operating cords on stock window coverings, as provided in section 4.3.1 of ANSI/WCMA–2018. Additionally, based on the comments received, the final rule includes rigid cord shrouds and retractable cords as methods to make operating cords on custom window coverings inaccessible to children, and loop cord and bead chain restraining devices as a method to prevent the formation of hazardous loops. Below we provide an overview of the engineering and human factors analysis of the requirements for stock and custom window coverings in ANSI/WCMA–2018, assess the balloted draft revision (draft ANSI/WCMA–2022), and evaluate the available technologies to make window coverings safer for children. We also explain the changes made in the final rule in response to the comments received on the NPR.

A. Engineering Assessment of Operating Cord Requirements in ANSI/WCMA–2018

1. Stock Window Coverings

As stated in the NPR, the requirements for operating cords on stock window coverings in ANSI/WCMA–2018 are adequate to address the risk of strangulation associated with window coverings. 87 FR 1030–31. Staff analyzed the incident data for window coverings, which indicated that the largest proportion of deaths, irrespective of window covering type, involved operating cords (most frequently tangled or knotted cords, followed by cord(s) wrapped around the child's neck). The voluntary standard recognizes that long and accessible cords can pose a strangulation hazard. ANSI/WCMA–2018 defines the ''operating cord'' as the portion of a cord that the user interacts with and manipulates to move the window covering in a certain direction (*e.g.,* lifting or lowering, traversing, rotating). If a child wraps a long operating cord around their neck, or inserts their neck into a cord loop created by the design of the window covering or by tangled cords, the child can strangle to death within minutes. ANSI/WCMA–2018 provides three ways that a stock window covering can comply with the standard to reduce or eliminate the risk of children strangulating on operating cords:

a. No Operating Cords (section 4.3.1.1). Having no operating cords eliminates the strangulation hazard associated with operating cords. Consumers use a mechanism, other than an operating cord, to accomplish the desired movement action (*i.e.,* lifting, lowering, traversing). For example, a spring mechanism on a horizontal blind allows the user to lift and lower the blind via the bottom rail of the window covering.

b. Short Cord with a Length Equal to or Less Than 8 Inches in Any State (section 4.3.1.2). Based on the anthropometric dimensions of the youngest child involved in an incident, a static cord length of 8 inches or shorter is insufficient to strangle a child, because the neck circumference of a fifth percentile 6- to 9-month-old child is 8 inches (BSI, 1990, as cited in Norris and Wilson, 1995). Because a child would need some extra length of cord to hold the cord out and wrap it around their neck, staff calculated that a cord must be longer than 8 inches to cause strangulation. The requirements for stock products in ANSI/WCMA–2018 rely on this 8 inch operating cord limit, requiring that operating cords must be 8 inches or shorter, or must be made inaccessible, to address the strangulation risk. The Canadian window covering regulation has a similar requirement, limiting accessible cord lengths to about 8.7 inches.

c. Inaccessible Operating Cords Determined Per the Test Requirement in Appendix C of the ANSI/WCMA–2018 (section 4.3.1.3). If a window covering has an operating cord that is longer than 8 inches, ANSI/WCMA–2018 requires that the cord must be inaccessible to children. Having inaccessible cords effectively eliminates the strangulation hazard associated with operating cords, because the child is unable to access a cord to cause strangulation. Accordingly, this requirement is tested using a probe that is intended to simulate the finger size of a young child; the diameter of the probe is 0.25 inches, based on fifth percentile 2- to 3.5-year-old's index finger diameter (Snyder *et al.,* 1977) at 0.33 inches and the off-the-shelf availability of a 0.25-inch diameter dowel pin. If the probe cannot touch the operating cord, the cord is then deemed inaccessible, pursuant to ANSI/WCMA–2018.

Figure 11 displays an example of a rigid cord shroud. In Figure 11, the accessibility probe cannot touch the operating cord because it is surrounded by the cord shroud. Therefore, the window covering in Figure 11 meets section 4.3.1.3 of ANSI/WCMA–2018, because the operating cord is inaccessible.

Figure 11. Rigid cord shroud

The Commission concludes that ANSI/WCMA–2018 adequately addresses the strangulation hazard posed by accessible operating cords on stock window covering products, because the standard either eliminates accessible operating cords, or it limits the length of the cord so that it is too short for a child to strangle.

2. Custom Window Coverings

As stated in the NPR, requirements for operating cords on custom window products in section 4.3.2 of ANSI/WCMA–2018 do not adequately address the risk of strangulation to children 8 years old and younger, because ANSI/WCMA–2018 allows custom window coverings to be sold with hazardous operating cords if they are custom ordered. 87 FR 1031–32. Of the 36 custom window covering incidents reviewed by staff, 31 (86%) incidents were related to operating cords (including pull cords and continuous loops). CPSC has determined that had the requirements in section 4.3.1 of the ANSI/WCMA standard for operating cords on stock products been in effect for custom window coverings, the requirements would have prevented 100 percent of the incidents involving operating cords on custom window coverings.

The 2018 version of the voluntary standard added two new requirements for custom window coverings to mitigate the strangulation hazard: (1) default maximum operating cord length of 40 percent of the blind height when the product is fully lowered, and (2) a default tilt wand option, instead of a cord, for tilting slats. However, ANSI/WCMA–2018 still allows hazardous operating cords to be part of the window covering design for custom products, which can comply with ANSI/WCMA–2018 using any of the methods below, all of which pose strangulation risks:

(a) *Accessible Operating Cords longer than 8 inches (section 4.3.2.6).* By allowing operating cords on custom window coverings to exceed 8 inches in length, ANSI/WCMA–2018 creates a continuing unreasonable risk of injury to children 8 years old and younger. Section 4.3.2.6 of ANSI/WCMA–2018 allows hazardous operating cords, meaning operating cords that are long enough for a child to wrap around their neck, or multiple cords that can become tangled and create a loop large enough for a child to insert their head. Even though ANSI/WCMA–2018 attempts to reduce the strangulation risk by shortening the default length of the cord to 40 percent of the window covering's length (section 4.4) and specifying the tilt wand as the default option versus tilt cords (section 4.4.1.1), as explained in Tab I of Staff's NPR Briefing Package, and in section II.C of the NPR, the risk associated with operating cords remains.

(b) *Continuous Loop Operating System (section 4.3.2.5).* This operating system requires that the operating loop be kept taut with a tension device. However, as observed in the incident data, a child can still insert their head into the continuous loop if it is not taut enough; in addition, tension devices may not be attached to the wall, which results in a free loop. Including the data reviewed since the NPR, CPSC staff identified 25 fatal strangulations involving a continuous corded loop without a functional tension device (*e.g.,* no device on the loop, device on the loop but not attached to a fixed surface, or broken device).[21] Moreover, staff identified various scenarios where a head probe could be inserted into the hazardous loop from an installed continuous loop with an ANSI/WCMA-compliant tension device attached to the wall. Staff also identified mis-installation or failure modes that will leave a hazardous loop on a custom product throughout its life cycle, starting from its installation.[22] In all these circumstances, a continuous loop operating system is not sufficient to prevent strangulation of a child.

We received more than 420 comments stating that continuous loops with properly attached tension devices are safe and should not be eliminated by the rule. These comments, however, are inconsistent with incident data, and CPSC staff's assessment of tension devices. Because of the risk of serious injury and death to children created by these devices, absent adequate safety features, the rule will not allow these devices to be sold with custom window coverings unless there is also an integrated, durable, safety feature that will adequately address the hazard. Specifically, the final rule will allow continuous loop systems if the product integrates a loop cord or bead chain restraining device that meets revised requirements in the final rule, including tests to ensure durability, such as an ultraviolet (UV) test, followed by a cyclic test, and a deflection test, as set forth in § 1260.2(d) of the final rule and explained in more detail in section II.E of this preamble.

(b) *Single Retractable Cord Lift System (section 4.3.2.4).* This method of complying with ANSI/WCMA–2018 allows an operating cord on a custom window covering to be pulled out to any length to operate the window covering, provided that it then retracts to a shorter length when the user releases the cord.

[21] Tab I of Staff's NPR Briefing Package, section II.C of the NPR.

[22] Tab I of Staff's Final Rule Briefing Package.

Retractable cord lift systems with an extended cord greater than 8 inches, and a low retraction force so that a child can access that length, allow a child to manipulate the cord and wrap the cord around their neck. Accordingly, the retractable cord requirement, as written in ANSI/WCMA–2018 for operating cords on custom window coverings, is not adequate to address the risk of injury, because the maximum cord length and a minimum pull force required to operate the system are not specified in the standard.

CPSC requested comment in the NPR on whether additional requirements for retractable cords, such as a maximum exposed cord length and a minimum pull force for a single retractable cord lift system, could address the strangulation hazard. 87 FR 1031–32. More than 140 commenters requested that retractable cords be allowed for use on custom window coverings. To address the comments, and to adequately address the risk of injury, the final rule allows for the use of single retractable cord systems provided they meet the additional requirements in the rule. Section 1260.2(c) requires that retractable cord systems complete retraction at 30 grams, have a non-cord retraction device, and have a stroke length equal to or less than 12 inches below the headrail. Retraction at 30 grams is the amount of force required to pull back the retractable cord fully into the headrail, to ensure that the cord remains inaccessible after use. A non-cord retraction device means that the product must use something other than a cord for the user to interact with to operate the window covering, such as a wand. A stroke length is the fixed amount of exposed cord available when a user pulls the retraction device down to lower or raise the window covering. In section II.E below, we assess that these additional requirements, including requirements for durability testing, will adequately address the strangulation hazard associated with accessible window covering cords.

3. Window Covering Technologies

The NPR reviewed safer window covering technologies to address the strangulation hazard in use on stock and custom window coverings, including cordless window coverings, window coverings with rigid cord shrouds, and cordless motorized window coverings. 87 FR 1032. Operating cords can be made inaccessible with passive guarding devices that allow the user to operate the window covering without the direct interaction of a hazardous cord. These types of window coverings use rigid cord shrouds, integrated cord/chain tensioners, or crank mechanisms. *Id.*

Cordless blinds can be raised and lowered by pushing up the bottom rail or pulling down the rail. This same motion may also be used to adjust the position of the horizontal slats for light control. Through market research, CPSC staff found several examples of cordless blinds that are made with a maximum height of 84 inches and a maximum width of 144 inches.

Rigid cord shrouds can be retrofitted over various types of window coverings to enclose pull cords and continuous-cord loops. A rigid cord shroud allows the user to use the pull cords while eliminating access to the hazardous cords. CPSC staff worked with WCMA and other members from March through December 2018, to develop draft requirements to test the stiffness of ''rigid cord shrouds,'' by measuring the deflection and deformation.[23]

The NPR included requirements for rigid cord shrouds based on the deflection and deformation test previously developed by the ANSI/WCMA members. The final rule retains the requirements for two tests, as proposed in the NPR: the ''Center Load'' test and the ''Axial Torque'' test, to ensure the stiffness and the integrity of the shroud so that the enclosed operating cord does not become accessible when the shroud is twisted. The Center Load test verifies the stiffness of the cord shroud, by measuring the amount of deflection in the shroud when a 5-pound force is applied at the mid-point. This test ensures that the shroud is not flexible enough to wrap around a child's neck. The Axial Torque test verifies that the cord shroud's opening does not enlarge to create an accessible cord opening when the shroud is twisted. Tab H of Staff's NPR Briefing Package contains additional detail on the requirement. The final rule maintains these requirements in § 1260.2(b). However, the final rule contains one clarification that rigid cord shrouds must also meet the UV and durability testing for cord shrouds in section 6.3 of ANSI/WCMA–2018.

The NPR also discussed crank mechanisms and cordless motorized blinds as safer alternatives to replace corded continuous-loop systems. 87 FR 1032. Cordless custom window coverings are allowed in the final rule pursuant to § 1260.2(a). Crank mechanisms are also allowed under § 1260.2(a) if the crank mechanism replaces the operating cord.

[23] The 2018 standard tests rigid cord shrouds for UV stability and impact.

B. International Standards for Window Covering Operating Cords

The NPR identified and assessed three international standards for operating cords on window coverings: (1) Australian, (2) Canadian, and (3) European. 87 FR 1032–22. The NPR stated that ANSI/WCMA–2018 is more stringent than the Australia Regulation, 2010 F2010C00801, and the European regulations, EN 13120, EN 16433 and EN 16434. However, the NPR stated that ANSI/WCMA–2018 is not as stringent as the new Canadian regulation, SOR/2019–97. Canada's window covering regulation states that any window covering cord that can be reached must be too short for a 1-year old child to wrap around their neck (*i.e.,* not more than 22 cm (8.66 inches) in length) or form a loop that a 1-year-old child can pull over their head (*i.e.,* not more than 44 cm (17.32 inches) in circumference). *Id.* Canada's regulation also requires that all window coverings meet one of the following conditions:

- *Section 4:* The cord shall be unreachable/inaccessible.
- *Section 5 and 6:* Reachable/accessible cords shall be 22 cm (8.66 inches) or less when pulled with 35N (7.87 lbf).
- *Section 7:* Reachable/accessible looped cords shall be 44 cm (17.32 inches) or less in perimeter when pulled with 35N (7.87 lbf).

Both the Canadian standard and the ANSI/WCMA stock window covering requirements do not permit a long, accessible operating cord. The Canadian standard is more stringent, however, because the Canadian standard applies to both stock and custom products, while the ANSI/WCMA standard contains separate requirements for stock and custom products, which allow long, accessible operating cords on custom products. *Id.*

Although the Canadian standard is similar to the ANSI/WCMA's stock window covering requirement, there are some differences. The NPR explained how the standards differ in the definition of an ''accessible cord,'' stating that the ANSI/WCMA–2018 standard has a more stringent definition. *Id.* Additionally, in Tab F of Staff's Final Rule Briefing Package, staff explains that the Canadian standard has a more stringent inner cord pull force requirement than ANSI/WCMA–2018; although staff assesses that the pull force in the ANSI/WCMA standard is adequate to address the risk of injury.

C. Human Factors Assessment of Operating Cord Requirements in ANSI/WCMA–2018

Operating cord requirements for stock window coverings in section 4.3.1 of ANSI/WCMA–2018 effectively eliminate the strangulation hazard associated with operating cords for stock window coverings. However, section 4.3.2 of ANSI/WCMA–2018 sets different requirements for operating cords on custom window coverings. Manufacturers can choose to meet the same requirements as stock products (cordless, inaccessible, or 8 inches or shorter) to comply, but the standard continues to allow operating cords that are accessible and that are longer than 8 inches, such as single retractable cord lift systems (with no stroke length limit), continuous loop operating systems, and standard operating systems. Thus, the ANSI standard allows free-hanging and accessible cords on custom window coverings that do not eliminate the strangulation hazard associated with operating cords.

1. Default Requirements for Custom Operating Cords Allow Accessible Cords

In the earlier versions of the ANSI/WCMA standard, the standard contained no specified length for operating cords. However, ANSI/WCMA–2018 added the following two requirements for custom window coverings, which are intended to reduce the hazard associated with free-hanging and accessible operating cords:

- Section 4.4 of ANSI/WCMA–2018 requires that the default cord length should be no more than 40 percent of the product height when the window covering is fully lowered. The exception is when a custom length is required to ensure user accessibility. Figure 12 shows the length of operating cords that are longer than 40 percent of product height and shorter cords that comply with this new requirement.
- Section 4.4.1 requires that a wand tilt be the default operating system, and cord tilt be an allowable customer option (Figure 12). The length requirement in section 4.4 still applies to tilt cords.

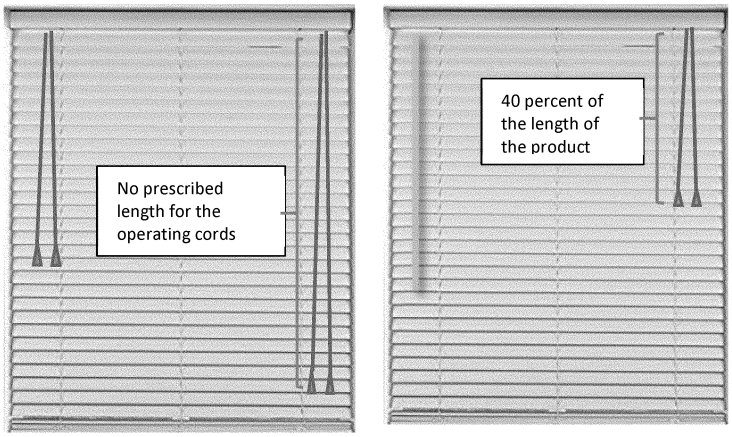

Figure 12. Window blind with operating cords longer than 40 percent of the length of the product and tilt cords to tilt the slats (left). Window blind with operating cords equal to 40 percent of the product length and wand tilt replacing tilt cords (right)

CPSC has concerns with longer operating cords that would comply with the requirements in sections 4.4 and 4.4.1 because:

- The length of operating cords can still be hazardous when the window covering is fully lowered. First, a child can wrap the cord around their neck; about 8 inches of cord is enough to encircle the child's neck.[24] Additionally, multiple cords can tangle and create a loop into which a child can insert their head; a loop with a circumference of about 17 inches is sufficient for child's head to enter.[25] Figure 13 shows these two scenarios.

[24] Neck circumference of fifth percentile 6- to 9-month-old children is 8 inches (BSI, 1990 as cited in Norris and Wilson, 1995).

[25] Head circumference of fifth percentile 6- to 9-month-old children is 16.5 inches (Snyder *et al.,* 1977).

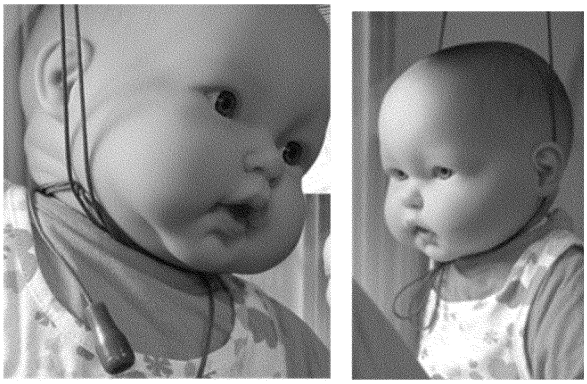

Figure 13. Demonstration of wrapped cords around (doll) child's neck (left), (doll) child's head is through the loop created by entangled multiple cords (right)

• Operating cord(s) will get longer as the window covering is raised, making it easier for a child to access and manipulate the hazardous operating cord. For example, a 60-inch-tall window blind with a 24-inch long (*i.e.,* 40 percent, consistent with section 4.4 of ANSI/WCMA–2018) operating cord can have an operating cord that is as long as 84 inches when the blind is fully raised.

• If the cord tilt option is chosen, the cord tilt can also be long enough for a child to wrap around their neck or be tangled and create a loop in which a child's head can enter.

• Firms typically allow consumers to easily change the default options during the custom order process, thus, maintaining a firm's ability to continue to sell accessible operating cords that exceed 8 inches long, posing a strangulation hazard.

Incident data show that children have strangled on operating cords in various ways. As reported in the incident data in section I.E of the NPR, and Tab A of Staff's NPR Briefing Package, custom window coverings were involved in at least 35 incidents. Table 4 shows how children accessed window covering cords. In 14 incidents, the child climbed on an item, including a couch, chair, toy chest, or dog kennel, and accessed the cord. In four cases, a child was on a sleeping surface, including a bed (2), playpen, and a crib. In six incidents, a child was able to reach the cord from the floor.

TABLE 4—CHILD'S INTERACTION SCENARIO IN INCIDENTS ASSOCIATED WITH CUSTOM PRODUCTS

Scenario	Number of incidents
Climbed on an item to reach the cords	14
On floor	6
On bed, in playpen or crib	4
Unknown	11
Total	*35*

The incident data demonstrate that accessible cords that are longer than 8 inches are hazardous. For example, the data show that even if operating cords are kept close to the window covering head rail, with some means, children climb and access the cords. Additionally, a significant number of operating pull cord incidents occurred in fully or partially raised window coverings, which reduces the benefit of having a default length of 40 percent of the window covering height in the fully lowered position of the window covering, because the cords will get longer as the product is raised.[26] Based on these data, the Commission concludes that the requirements in sections 4.4 and 4.4.1 of the ANSI/WCMA–2018 standard are inadequate because they continue to allow accessible and long cords to be part of the window covering.

2. Warning Labels in ANSI/WCMA–2018, Alone, Are Inadequate To Address the Strangulation Hazard Associated With Operating Cords

The ANSI/WCMA–2018 standard requires that corded custom window covering products have warning labels regarding the strangulation hazard to children, as summarized below:

• A warning label must be permanently attached to the bottom rail, including a pictogram depicting the hazard of a cord wrapped around a child's neck. The content explains the strangulation hazard and what consumers need to do to avoid the hazard (keeping cords out of children's reach, shortening cords to prevent reach, moving crib and furniture away).

• A similar warning label must be placed on product merchandising materials which includes, but is not limited to, the sample book and the website (if the website is relied upon for promoting, merchandising, or selling on-line).

• A warning tag containing a pictogram and similar text as above must be placed on accessible cords, including operating cords, tension devices that are intended to keep continuous loops taut, and on inner cords of a roll up shade.

Formatting of warning labels in the ANSI standard is required to follow ANSI Z535 standards.[27] This includes a signal word (''WARNING'') in all uppercase letters, measuring not less than 5⁄16 in (8 mm) in height and preceded by an ANSI safety alert symbol (*i.e.,* an equilateral triangle surrounding an exclamation point) of at least the same size, the rest of the warning message text be in both uppercase and lowercase letters, with capital letters measuring not less than 1⁄8 in (3 mm). A Spanish version of the label is also required.

[26] A total of 36 out of 46 pull cord incidents when position of the window covering was known have occurred with partially or fully raised window covering (1996 to 2016 incidents).

[27] The ANSI Z535 Series provides the specifications and requirements to establish uniformity of safety color coding, environmental/facility safety signs and communicating safety symbols. It also enables the design, application, use and placement of product safety signs, labels, safety tags and barricade tape.

Among the 36 incidents involving custom products, at least 16 of the incident units had a visible, permanent warning label, as displayed in Table 5.[28] In some cases, parents reported that they were aware of the cord hazard, but never thought their child would interact with a cord; in a few cases, parents were aware of the operating cord hazard but not the inner cord hazard. In some cases involving bead chains, parents thought that the connector clip on the bead chain loop was supposed to break away. None of the incident units had a hang tag. One unit had the hang tags tucked into the head rail, which was discovered when the unit was removed.

TABLE 5—PRESENCE OF PERMANENT WARNING LABELS IN INCIDENT UNITS

Permanent label present	Number of incidents
Yes	18
Mostly peeled off	1
No	7
Unknown	10
Total	*36*

As stated above, warning labels are unlikely to effectively reduce the strangulation risk due to hazardous cords on window coverings, because consumers are not likely to read and follow warning labels on window covering products, and strangulation deaths among children occur quickly and silently, such that parental supervision is insufficient to address the incidents.

3. Certain Safety Devices Are Inadequate To Address the Risk of Strangulation

ANSI/WCMA–2018 requires that custom products with accessible operating cords include cord cleats with instructions for use and mounting. The standard also requires that custom products with a continuous-loop operating system contain a cord tension device. Figure 14 shows examples of cord cleats and tension devices.

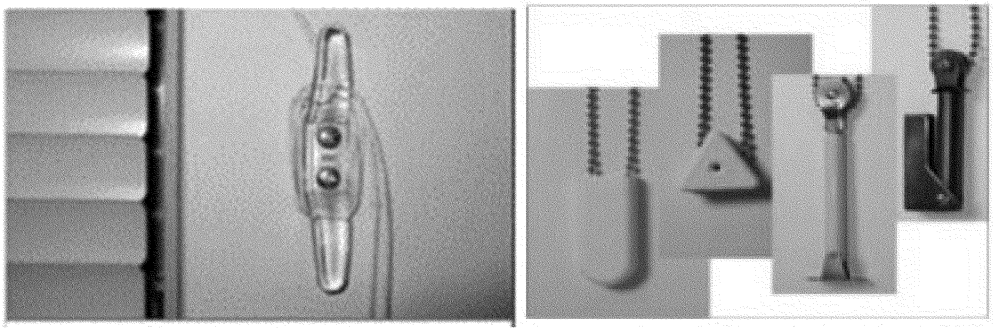

Figure 14. Examples of cord cleat (left), cord tension device (right)

(a) Cord Cleats

When a cord cleat is installed, the consumer must wrap the cord around the cleat every time the product is raised or lowered to mitigate the strangulation hazard, which means that the user's active involvement is necessary every time. Furthermore, cord cleats can be accessed by a child if they climb onto something, like a couch or chair. In one incident, although caregivers normally wrapped the cord around the cleat, on the day of the incident, cords were not wrapped, and the child accessed the cords after climbing on a couch.

(b) Tension Devices

ANSI/WCMA–2018 requires that a tension device be attached to the cord or bead chain loop by the manufacturer, and also requires that removal of the device demand a sequential (*i.e.,* multi-step) process or tools. The voluntary standard also requires window coverings to be designed so that they are prevented, at least partially, from operating, unless the tension device is properly installed. The standard also requires that the tension device be supplied with fasteners and instructions and meets the durability test requirements.

Reliance on safety devices that consumers must use or install separately from the window covering operating system is problematic for several reasons. First, this is not an ideal approach from the consumer's perspective because securing safety devices goes beyond the installation of the window covering itself, and increases the time and effort required to use the product. Second, safety devices usually require drilling holes on the wall or windowsill, which may not be permissible for renters and may not be desirable by homeowners. Third, the requirement that window coverings be designed so that they are at least partially prevented from operating, unless the tension device is properly installed, has not proven to be effective. CPSC staff has determined that a head probe (simulating a child's head) can be inserted into a tensioned loop cord; and as described below, there are reported strangulation incidents involving this scenario and others where tensioners were present.

Among the 36 incidents involving custom products, 13 had continuous loop cords or bead chains. In one non-injury incident, the child was able to insert his head through the loop even though a professional installer had attached the tension device to a wall. In two incidents, a tension device was attached to the cord but not to the wall. In one incident, the tension device had broken prior to the incident and not been repaired. In five incidents with continuous loops or bead chains, a tension device was not installed or present. The reports on the remaining four incidents contain no mention of a tension device.

(c) Consumer Perception of Non-Integrated Safety Devices

Some consumers may believe that because they do not expect to have young children living with them or visiting them, installation of external safety devices, such as tension devices and cord cleats, is unnecessary. But custom window coverings last approximately 10 years, and so they can be expected to remain in the home for a long time. Unforeseen visits by children can occur in that period, and when homes are sold, or new renters move in, the existing window coverings,

[28] In two cases, staff examined exemplar units.

if they are functional, usually remain installed and become hazardous to visitors and new occupants with young children.

Finally, CPSC issued a contract to investigate the effectiveness of safety devices in reducing the risk of a child's access to hazardous cords and loops on window coverings.[29] The research objective was to provide CPSC with systematic and objective data on the factors that impact installation, use, and maintenance of window covering safety devices; assess how these factors impact the likelihood of correct installation, use, and maintenance; and identify how the factors relate to the goal of reducing children's access to hazardous cords and loops on window coverings. Major findings from the study point to:

(i) A general awareness about cord entanglement among caregivers does not translate to precautionary action, due partly to the insufficient information provided at the point of sale;

(ii) Lack of awareness of the speed and mechanism of the injury that may lead to caregivers' underestimating the importance of providing an adequate level of supervision;

(iii) Difficulty using and installing safety devices as primary reasons for not using them; and

(iv) Inability to recognize the purpose of the safety devices provided with window coverings.

In general, participants in the study preferred a cordless window covering or a passive mechanism, which does not require intentional action by the user. The researchers concluded that there could be benefits from enhancing the public's awareness and understanding of the unique nature of incidents (*e.g.,* speed, mechanism) and explaining a child's vulnerability in all rooms in the home, and that providing specific information at the point of sale could be partially helpful. However, these improvements would be incremental, and increasing the use of cordless window coverings would be needed to achieve significant benefits.

For the final rule, the Commission determines that safety devices that are external to the window covering product and require installation and/or consumer interaction to make the cord less hazardous, are ineffective to adequately reduce the risk of injury from strangulation. However, the final rule does provide for use of passive safety devices, such as cord shrouds and loop cord and bead chain restraining devices, to adequately address the risk of injury, provided that the passive safety device is integrated with the product before sale, and does not require use or installation of an external safety device.

4. Relying on Parental Supervision Is Inadequate

For many years, CPSC has identified cords on window coverings as a hidden hazard. If young children are left unsupervised for even a few minutes in a room that is considered safe, such as a bedroom or family room, they can wrap a cord around their neck, insert their head into a cord loop, and be injured or die silently.

Even when supervision is present, the level of supervision varies, and distractions and other limitations to supervision exist. For example, CPSC has incident reports involving five near-fatal strangulations, in which the parent was either nearby, or in the same room. Among the 36 incidents involving custom products, incident location is known for 34 incidents. In 18 incidents, the child was in a room shared by the family members, such as a family room, living room, and sunroom. Eleven of 18 incidents were not witnessed, whereas five were witnessed by an adult, and two incidents occurred in the company of other children. Almost all the incidents (15/16) that occurred in a bedroom were unwitnessed (Table 6).

Behavioral research supports these incident reports. People cannot be perfectly attentive, particularly over long periods, regardless of their desire to do so (Wickens & Hollands, 2000). Caregivers are likely to be distracted, at least occasionally, because they must perform other tasks, are exposed to more salient stimuli, or are subject to other stressors, such as being responsible for supervising more than one child. In fact, research by Morrongiello and colleagues (2006) indicates that older toddlers and preschool children (2 through 5 years old) are regularly out of view of a supervising caregiver for about 20 percent of their awake time at home, and are completely unsupervised for about 4 percent of awake time in the home. The most common rooms in which children were left alone and unsupervised, according to the research, were the living or family room and the bedroom.

TABLE 6—LOCATION OF INCIDENTS AND WHETHER THE INCIDENTS WERE WITNESSED

Location	Fatal	Nonfatal
Bedroom:		
Witnessed by children	1	.....
Not witnessed	9	6
Family/Living/Dining room:		
Witnessed by Adult	.....	5
Witnessed by children	.....	2
Not witnessed	5	6
Unknown	.....	2
Grand Total	*15*	*21*

5. Assessment of Operating Cord Requirements for Window Coverings

CPSC staff evaluated the requirements that apply to operating cords on stock window coverings in section 4.3.1 of ANSI/WCMA–2018: no operating cords, short operating cords 8 inches or shorter, or inaccessible operating cords determined per the test requirement in Appendix C of ANSI/WCMA–2018. Having no operating cords effectively eliminates the strangulation hazard associated with operating cords because there is no cord to cause strangulation; therefore, this is an adequate requirement. Having a short cord that does not exceed 8 inches of length in any position of the window covering also effectively eliminates the strangulation hazard associated with operating cords; the neck circumference of fifth percentile 6- to 9-month-old children is 8 inches (BSI, 1990 as cited in Norris and Wilson, 1995), therefore, this is an adequate requirement. Ensuring that the operating cords are inaccessible is another adequate requirement. This requirement is tested in ANSI/WCMA–2018 using a probe that is intended to simulate the finger size of a young child. If the probe cannot touch the cords, the cord is then deemed inaccessible. Staff assessed that child anthropometry and strength-related inputs to develop these requirements are adequate to address the strangulation risk associated with hazardous cords.

To effectively address the unreasonable risk of strangulation associated with operating cords on custom window coverings, the final rule contains the same requirements for operating cords on custom window coverings that are required in the voluntary standard for stock window coverings. Additionally, the final rule specifically approves two methods to make operating cords inaccessible (rigid cord shroud or retractable cord), and one method to prevent the formation of a hazardous loop on a continuous-loop system (loop cord or bead chain restraining device).

[29] *https://cpsc.gov/s3fs-public/Window%20Coverings%20Safety%20Devices%20Contractor%20Reports.pdf.*

6. Addressability of Incidents With the Final Rule

Table 7 displays incident data for the custom and stock (and unknown) product categories, by cord type. If the custom window coverings involved in the incident data had complied with the requirements in the final rule for operating cords, meaning complying with the requirements for stock products in section 4.3.1 of ANSI/WCMA–2018, 91.1 percent (31/34) of the custom product incidents for which cord type is known would have been prevented. All of the remaining custom product incidents for which cord type is known would have been addressed by complying with the voluntary standard for inner cords, which will be codified as mandatory in the final rule under section 15(j) of the CPSA.

TABLE 7—STOCK/CUSTOM/UNKNOWN WINDOW COVERINGS INVOLVED IN INCIDENTS AND CORD TYPES

[All reported data combined]

Stock/custom	Continuous loop	Inner cord	Lifting loop	Operating cord	Tilt cord	Unknown	Grand total
Custom	13	3	0	18	0	2	36
Stock	3	14	1	24	2	6	50
Unknown	19	6	3	32	3	60	123
Grand Total	*35*	*23*	*4*	*74*	*5*	*68*	*209*

7. Accessibility Concerns

Section 9(e) of the CPSA, 15 U.S.C. 2058(e), requires that the Commission consider the special needs of elderly and handicapped persons to determine the extent to which such persons may be adversely affected by such rule. At least 383 commenters stated that having a short cord introduces accessibility issues for various consumers, including people in wheelchairs or people who are otherwise challenged to reach elevated access cords; and these commenters urge that these consumers still need a corded product. Similarly, some commenters stated that the proposed rule is not compliant with the Americans with Disabilities Act (ADA). In that regard, the Department of Justice has published accessibility standards called the 2010 ADA Standards for Accessible Design (2010 ADA Standards). The 2010 ADA Standards set minimum requirements for newly designed and constructed or altered state and local government facilities, public accommodations, and commercial facilities to be readily accessible to and usable by individuals with disabilities. Sections 308.2 and 308.3 of the 2010 ADA Standards specify forward and side reach distances.[30] For example, an unobstructed high forward reach and high side reach shall be 48 inches (Figures 15–18).

BILLING CODE 6355–01–P

[30] Department of Justice (2010). 2010 ADA Standards for Accessible Design, accessed at: *https://www.ada.gov/regs2010/2010ADAStandards/2010ADAStandards.pdf.*

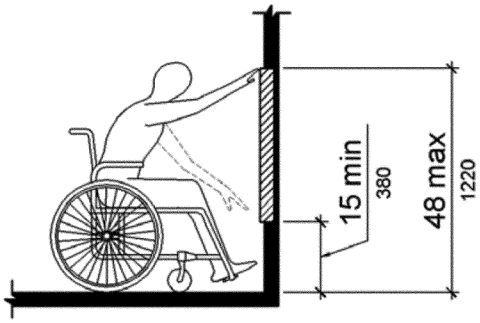

Figure 15. Obstructed Forward Reach

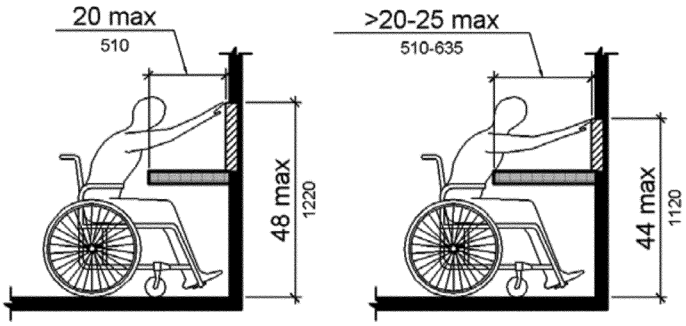

Figure 16. Unobstructed High Forward Reach

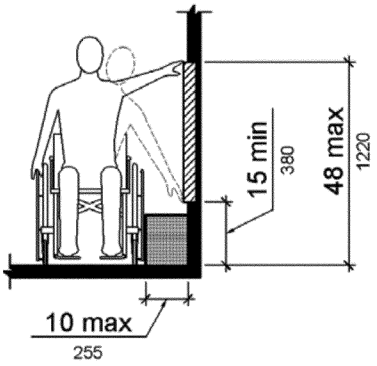

Figure 17. Obstructed Side Reach

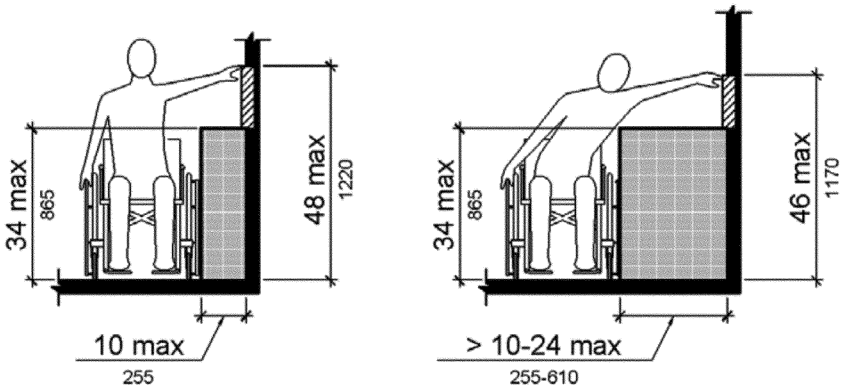

Figure 18. Obstructed High Side Reach

Note. **Figures 15-18 are from 2010 ADA Standards for Accessible Design, accessed at https://www.ada.gov/regs2010/2010ADAStandards/2010ADAStandards.pdf**

In Tab B of Staff's Final Rule Briefing Package, staff assesses that alternative solutions can safely replace the existing hazardous cords, such as rigid cord shrouds and loop cord and bead chain restraining devices, which can allow access at about the same height as corded products. Additionally, retractable cords can be made accessible with a rigid wand or handle to an easy-to-access height. Moreover, poles are available to reach the bottom of cordless products.

Under the ADA, operable parts of the window covering need to be operable with one hand and not require tight grasping, pinching, or twisting of the wrist; the force required to activate operable parts must be five pounds maximum. Traditional operating cords and continuous loop bead chains and cords require tight pinching and grasping to operate. However, window coverings that are compliant with the mandatory rule would likely have interfaces, such as rigid cord shrouds, which would meet the ADA requirement, by avoiding pinch grip, and instead using hand grip.

Also, rigid cord shrouds, loop cord and bead chain restraining devices, and retractable devices can be easier to operate from behind furniture, compared to continuous loops that are attached to a wall. Figure 19 illustrates a comparative assessment. If the continuous loop is not attached to a wall, then it is easier to access (by leaning to grab it) and operate, but it poses a strangulation risk (left); if a tension device is attached to a wall, it is not easy for consumers to access (middle); on the other hand, a rigid cord shroud is not less accessible, and it is operable behind the furniture while also being safe (right).

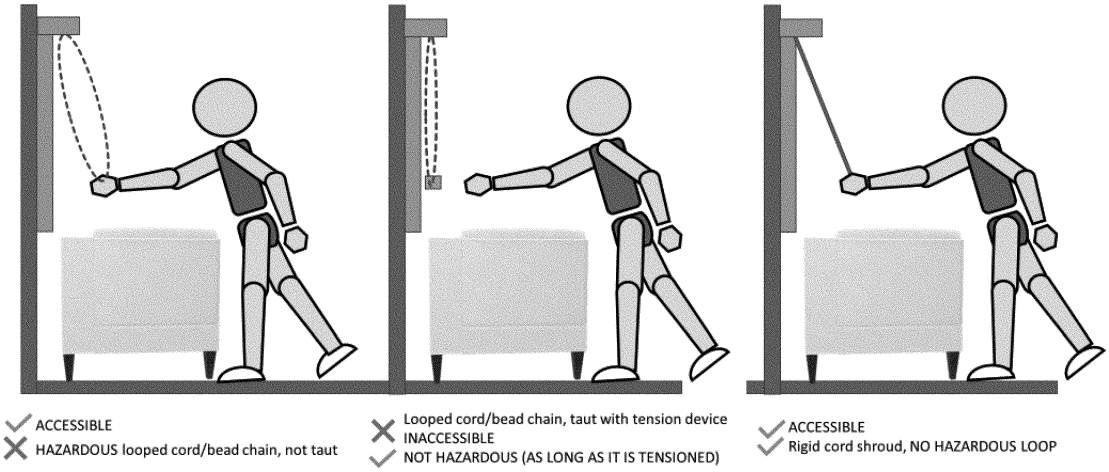

Figure 19. Operability of a window covering behind an obstruction

Lastly, if continuous loops with tension devices were allowed as an option in homes where accessing the cord is an issue, continuous loops might not be attached to the wall, particularly in locations where a continuous loop is difficult to access when the cord is kept taut via a tension device. Based on the incident data, staff concludes that it is reasonably foreseeable that not only a consumer, but also a professional installer, may follow an elderly or disabled consumer's request not to install the tension device and remove it from the cord loop in homes where accessibility is an issue. By contrast, products manufactured with a safer option would be both accessible to a disabled user and protective of child safety.

Finally, as explained in more detail in section II.E of this preamble, the Commission is approving in the final rule three methods that not only make window coverings safer, but also may be suitable for hard-to-reach locations and for persons with disabilities.

8. Information and Education

Since 1985, CPSC has been warning of the danger of child strangulation due to corded window coverings. Every October, CPSC participates jointly with Window Covering Safety Council (WCSC) in National Window Covering Safety Month to urge parents and caregivers to check their window coverings for exposed and dangling cords and to take precautions. Both CPSC and WCSC recommend cordless window coverings at homes where young children live or visit.

In addition to traditional communication methods, CPSC reaches out to consumers using social media, such as safety blogs and online chats, to create awareness of the hazards associated with corded window coverings. Given the long history of continuing injuries and deaths despite window covering safety campaigns, the campaigns have not adequately eliminated or reduced the hazard.

D. Assessment of the Balloted Draft ANSI/WCMA–2022 Standard

After the publication of the NPR on January 7, 2022, WCMA brought forth several proposals to revise the requirements for custom window covering cords in ANSI/WCMA–2018. On July 15, 2022, WCMA issued a ballot to revise ANSI/WCMA–2018 (draft ANSI/WCMA–2022) and the ballot closed on August 15, 2022. The draft balloted ANSI/WCMA–2022 standard includes safety improvements from the ANSI/WCMA–2018 standard. These include: elimination of free-hanging operating and tilt cords, elimination of cord loop lift systems, elimination of continuous cord loop systems for horizontal blinds, and adding deflection and deformation tests for rigid cord shrouds.

Section 9(b)(2) of the CPSA requires the Commission to rely on a voluntary standard if the voluntary standard is likely to reduce the risk of injury and products within the scope of the standard will likely substantially comply with the voluntary standard. For section 9(b)(2) of the CPSA to apply, such voluntary standard must be ''in existence,'' meaning approved by the voluntary standards organization. ANSI/WCMA has not yet approved the balloted draft voluntary standard. Accordingly, the Commission will not rely on the draft balloted ANSI/WCMA–2022 standard for the final rule. In addition, Tab I of the Staff's Final Rule Briefing Package contains a detailed analysis of the draft standard, which finds inadequacies in the proposal that we summarize below.

1. Modified requirements for single-cord retraction devices: Although draft ANSI/WCMA–2022 eliminates cords attached to the Operating Interface (*i.e.,* the part of the cord retractor that the operator pulls on) to prevent the creation of a hazardous loop, the draft revision allows a maximum stroke length of 36 inches. In Tab B of Staff's Final Rule Briefing Package, CPSC staff assesses this revision to be inadequate to eliminate the strangulation hazard, because a 36-inch extended cord could allow a child to wrap the cord around his/her neck.

2. Additional requirements for tension devices used with continuous loop operating systems:

a. The modification in section 6.3.1 of the balloted standard requires tension devices to be attached to the cord or bead chain loop by the manufacturer, and be designed, placed, and shipped such that, unless properly installed, or unless altered from the shipped condition with sequential process (requiring two or more independent steps to be performed in a specific order) or tools, it prevents the window covering from operating fully. This draft requirement does not ensure that tension devices will be effective for the life of the window covering. For example, if an installer cuts the zip tie that is sometimes used to connect tension devices to the headrail, then the tension device would have been altered from its shipping condition with a tool, and operation of the window covering without the tension device would be consistent with section 6.3.1. Therefore, this requirement still allows consumers or the installer to set up the window covering in an unsafe manner while either in a fully operable state by removing the tension device from the loop, or in a partially operable state, by

leaving the tension device on the loop, but not attaching it on the wall.

b. The modification in section 6.3.2, states that the manufacturer shall attach the tension device to the cord or bead chain loop by means of a permanent assembly method. This requirement is intended to ensure that if an installer or consumer attempts to remove the tension device, the device or component will break. CPSC staff is aware of an incident involving a tension device that used one-way snap features, as permitted by the balloted draft standard. The snap features broke off, exposing the continuous loop cord (Figure 20 below, from In-Depth Investigation (IDI)). This incident shows that a permanent assembly method requirement does not ensure that the tension device will remain assembled. CPSC staff assesses that this provision is inadequate to address the risk of injury, because even if the tension device breaks, the looped cord will not necessarily be damaged. Therefore, for hard-to-reach locations, or for people who do not want holes in their walls, removing the tension device may be preferable, and the window covering will remain fully operable.

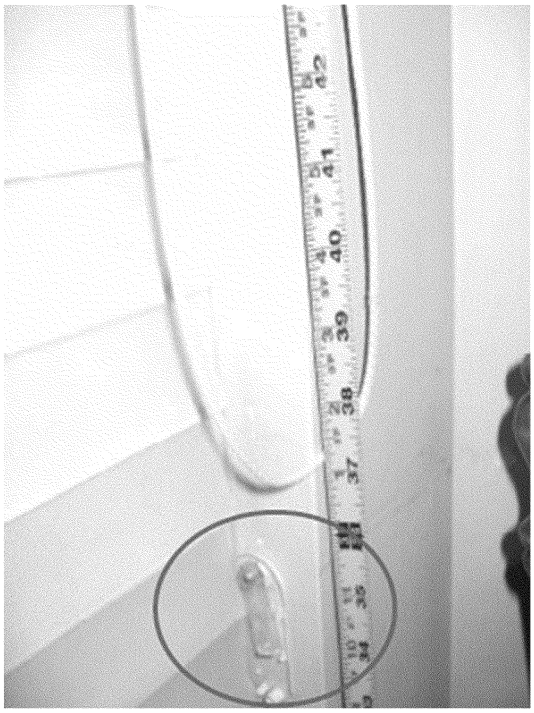

Figure 20. Broken tension device in IDI

c. The modification in section 6.3.3 of the balloted draft standard, states: ''the tension device in conjunction with the product shall maintain tension on the operating cords when properly installed. If the tension device is installed in a location that does not maintain tension on the operating cords, the tension device will prevent the window covering from operating as designed for full operation of the product. The window covering may not operate independently of the Cord or Bead Chain Loop.''

The draft standard defines ''Tension'' as ''The applicable, consistently applied force required to eliminate or prohibit the creation of a hazardous loop in any operating position.'' Yet, in testing a tension device identified as compliant with the draft standard, CPSC staff determined that an amount of tension that allowed full operation of the window covering still allowed a head probe to be inserted into the loop (Figure 21 below).

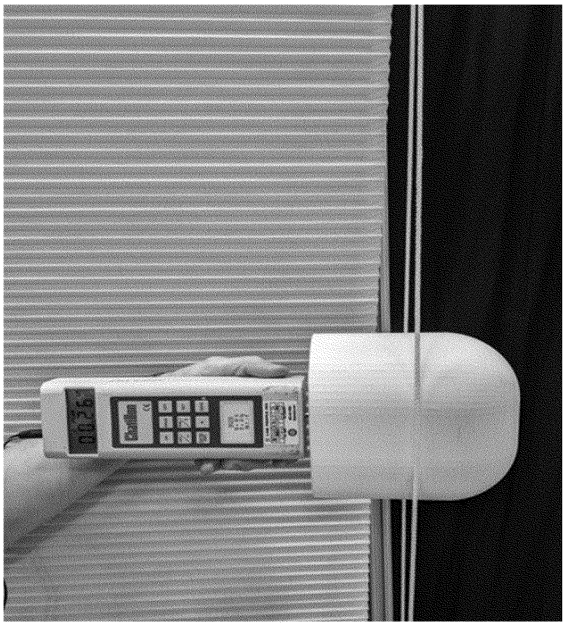

Figure 21. A head probe can pass through properly installed continuous loop under tension

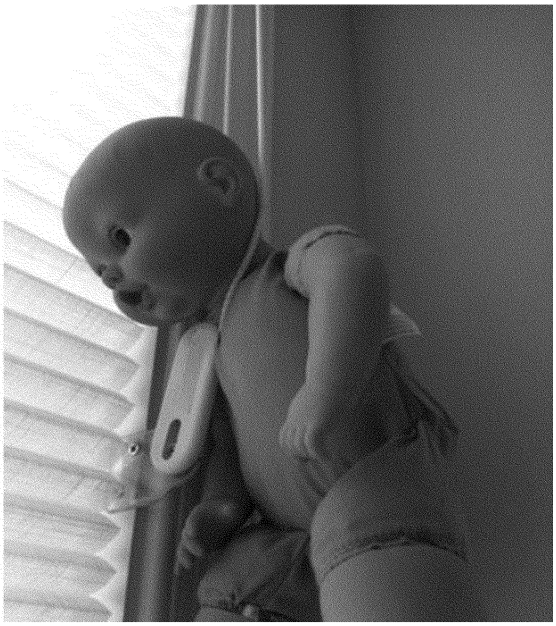

Figure 22. Re-enactment of how a 5-year-old child was found by a consumer with his head caught in a continuous cord loop

Accordingly, staff has concluded that a properly installed tension device that would be acceptable under the balloted standard still allows an accessible hazardous loop, which is also observed in one incident (Figure 23).

Additionally, while the draft ANSI/WCMA–2022 requires the tension device to prevent the window covering from operating, as designed, for full operation of the product, the window covering can be operated partially, as shown in Figure 23. An incident that occurred in 2005 had a window covering with a ''universal cord tensioner'' that limited the operability of the window covering unless the tension device was installed. The plastic universal cord tensioner piece was hanging freely from the cord and not attached to the wall (Figure 24), reflecting that diminished utility was not sufficient motivation for the landlord or residents to repair or replace the tensioner.

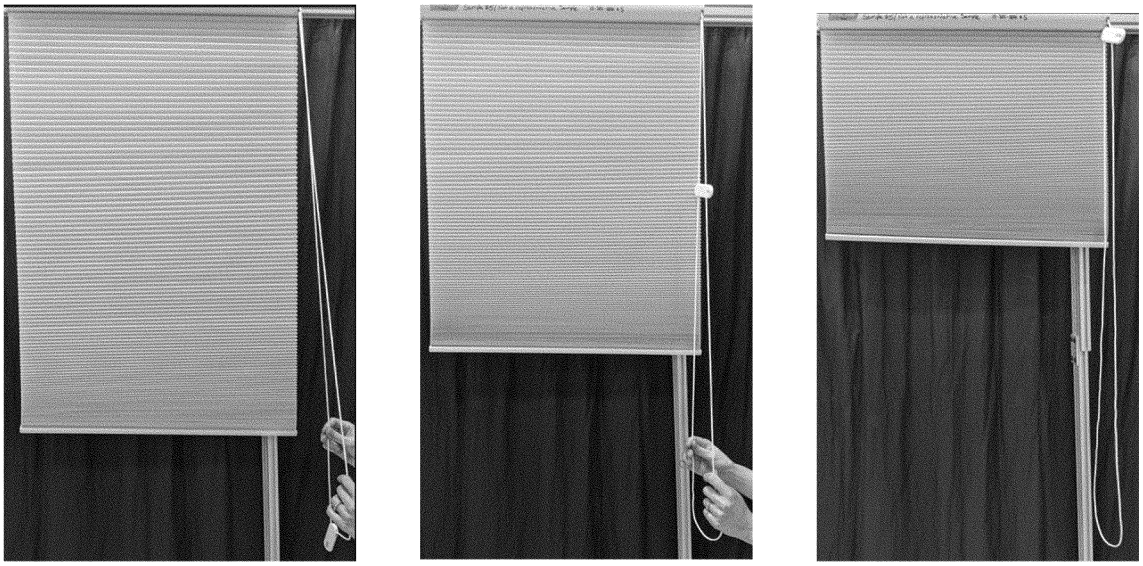

Figure 23. Partially operable window covering when tension device is not attached to a fixed surface

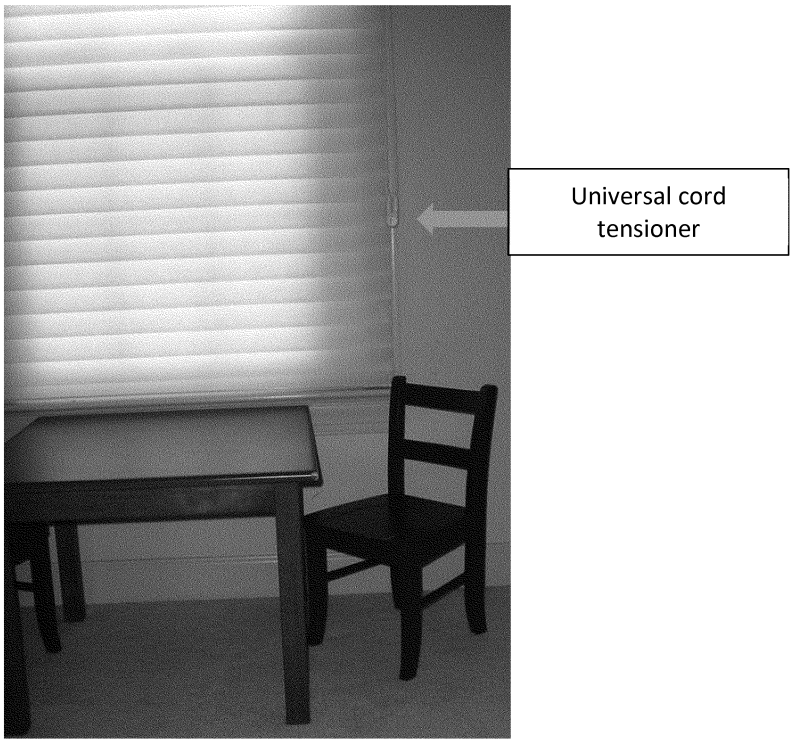

Figure 24. Universal cord tensioner remained unattached to the wall for about 3 years

BILLING CODE 6355–01–C

3. Exempting curtains and draperies from the scope of the standard. While the balloted draft standard does not require safety measures to prevent cord injuries with draperies and curtains, CPSC staff has identified at least four fatalities involving draperies and curtains; all deaths were a result of continuous loops. There are multiple cordless options available for draperies, including wands and motorized controls, as well as simply pulling the draperies on the traverse rod by hand, with no cord or other control.

E. Changes in the Final Rule

The Commission, therefore, is finalizing the rule generally as proposed, requiring custom window coverings to meet the requirements for stock window coverings in section 4.3.1 of ANSI/WCMA–2018, meaning that custom window coverings must be cordless, have short cords (8 inches or

less), or the cords must be made inaccessible. The final rule allows, as proposed, a rigid cord shroud that meets the requirements of the rule as a method of making standard operating systems (pull cords) and continuous cord loop operating system inaccessible.

Based on the comments, the Commission considered including in the final rule other methods of making operating cords inaccessible or preventing the formation of hazardous loop. As stated in the NPR, and discussed above, continuous cord loop operating systems with external tension devices that are attached on a wall or windowsill can pose a strangulation hazard, because they require the consumer or installer to properly install them to eliminate the hazard, and because external tension devices can break, be removed, or not be installed. Accordingly, they are not acceptable under the final rule. However, passive devices that make an operating cord inaccessible—meaning those installed on the product itself by the manufacturer that cannot be easily defeated, uninstalled, or break, such as a rigid cord shroud for operating cords and a loop cord or bead chain restraining device on a continuous cord loop operating system—eliminate the strangulation hazard and the need to rely on a consumer or installer to make the product safe as installed. The final rule allows these solutions.

Below we explain the requirements associated with these provisions of the final rule. We also set out specific requirements for large window coverings, which are included within the scope of the final rule.

1. Requirements for Rigid Cord Shrouds

The requirements for rigid cord shrouds are being finalized, as proposed. However, the requirements are now contained in § 1260.2(b) of the regulation text, as opposed to § 1260.2(b) and (c), so that the test method for rigid cord shrouds are contained in a single section of the rule. The final rule eliminates hazardous continuous cord loop operating systems; however, manufacturers can still use standard operating systems (operating pull cords or continuous cord loop operating systems) if the cord is not accessible when tested to the requirements of the rule. A rigid cord shroud that meets the rule makes the cords on a continuous cord loop operating system or standard operating system inaccessible.

ANSI/WCMA 2018 defines a ''cord shroud'' as a device or material added to limit the accessibility of a cord or formation of a hazardous loop. Per section 4.3.2.5.2 of the 2018 standard, one of the ways that accessible cords (continuous cord loops and standard operating systems) can meet the standard is to contain the cords in a rigid cord shroud that meets the requirements in sections 6.3.1 (Appendix C: Test Procedure for Accessible Cords) and 6.3.2 (durability, impact, and operational cycle tests). The final rule clarifies in § 1260.2(b) that rigid cord shrouds must meet the requirements in section 6.3. Additionally, as proposed, rigid cord shrouds must also meet the deflection and deformation tests described in § 1260.2(b)(1) and (2). Rigid cord shrouds can be used to enclose continuous cord or bead chain loops. Tab C of Staff's Final Rule Briefing Package contains examples, including pictures of rigid cord shrouds and how they operate.

Staff found two window coverings currently on the market that use rigid cord shrouds. Staff purchased and evaluated these products. Based on staff's examination and the available products on the market, rigid cord shrouds are used to operate window coverings up to at least 76.75 inches (stock) to 96-inches tall (retro-fit, meaning after-market). CPSC's engineering staff further concluded, as described in Tab C of Staff's Final Rule Briefing Package, that a rigid cord shroud can be designed to operate window coverings more than 96 inches tall, if the shroud is made from more rigid materials, such as metal, that meet the deflection requirements in the final rule.

Large rigid cord shrouds may require additional development and tooling for continuous cord loop operating systems with window shades more than 96 inches tall; however, existing shrouds should not require major redesigns because these products have already been developed and only require adjustments to the head and the length of the cord shroud to fit the window covering. Based on engineering staff's review of the rigid cord shrouds currently on the market, which includes shrouds on window coverings up to 96 inches, the Commission finds that extensive development is unnecessary for custom manufacturers to incorporate rigid cord shrouds for window coverings that currently use a continuous bead chain operating system. For these reasons, the Commission determines that a continuous cord loop operating system with a rigid cord shroud could be manufactured to operate window coverings of all sizes and meet the requirements of the final rule.

2. Requirements for Loop Cord and Bead Restraining Devices

The NPR discussed that, unlike tension devices, loop cord and bead chain restraining devices are designed and installed by the manufacturer onto the window covering, are integral to the window covering, and do not need to be attached on the wall to keep the loop taut. The NPR requested comment on the adequacy of loop cord and bead chain restraining devices to address the risk of strangulation on custom window coverings. 87 FR 1031. CPSC received hundreds of comments from businesses opposing elimination of continuous cord loop operating systems to meet the requirements of the rule.

ANSI/WCMA–2018 defines a ''cord and bead chain restraining device'' as a device that prevents the creation of a hazardous loop from an accessible continuous operating cord. According to section 6.5 of the ANSI/WCMA–2018, loop cord and bead chain restraining devices must be subjected to durability, UV stability, and impact testing, and must pass the hazardous loop testing procedure to confirm that a loop cord and bead chain restraining device prevents the creation of a hazardous loop from an accessible continuous cord loop. Tab C of Staff's Final Rule Briefing Package provides staff's assessment that loop cord and bead chain restraining devices are technically feasible to incorporate into custom window coverings, and that they address the continuous cord loop strangulation hazard by preventing the formation of a hazardous loop. However, staff advises that the test sequence identified in section 6.5 of ANSI/WCMA–2018 is not representative of real-world scenarios, and recommends exposing the device to UV light first, and then conducting the operational cyclic test. Staff also recommends incorporating a deflection test that is similar to the one provided in the NPR for rigid cord shrouds to improve the safety of these products by preventing bending to an extent that a child could wrap it around their neck.

The Commission will allow loop cord and bead chain restraining devices (as defined in § 1260.1 of the final rule) as a permissible way to make accessible continuous cord loop operating systems non-hazardous. However, the final rule modifies the requirements for cord and bead chain restraining devices from those in section 6.5 of ANSI/WCMA–2018, to adequately address the risk of strangulation associated with accessible operating cords on custom window coverings. Specifically, the final rule:

- Adds a deflection requirement for loop cord and bead chain restraining

devices that prevents bending of the device to an extent that a child could wrap it around their neck, similar to the deflection requirements for rigid cord shrouds as stated in § 1260.2(b) of the final rule.

• Tests one sample to section 6.5.2.2 of ANSI/WCMA–2018, UV Stability, followed by testing to section 6.5.2.1, Operational Cycle Test. This change in test order will simulate real world conditions of a loop cord and bead chain restraining device exposed to sunlight and operated over the life of the window covering.

3. Requirements for Retractable Cords

In the NPR, the Commission tentatively determined that the retractable cord requirement, as written in ANSI/WCMA–2018 for operating cords on custom window coverings, is not adequate to address the risk of injury, because the maximum cord length and a minimum pull force required to operate the system are not specified in the standard. CPSC requested comments on whether additional requirements for retractable cords, such as a maximum exposed cord length and a minimum pull force for a single retractable cord lift system, can address the strangulation hazard. 87 FR 1031.

The Commission received at least 149 comments stating that retractable cords are safe based on the lack of incidents, and that because retractable cords have not been involved in incidents, retractable cords should not be eliminated by a mandatory standard. A June 21, 2022 letter from consumer advocates to WCMA suggests that retractable cords be allowed in the voluntary standard with the following text: ''All cords must be inaccessible. The maximum allowable cord length is 12 inches from the headrail.'' [31]

The 12-inch exemption is, in part, based on the required steps that a child would need to go through with a retractable cord for it to pose a hazard. Tab B of Staff's Final Rule Briefing Package. Consistent with WCMA's recommendation, CPSC staff considered that while the smallest neck circumference of youngest children at risk, 6- to 9-month-old children, is about 8 inches,[32] children who can climb to the top of the window covering will be older, and they need to be able to hold the cord and wrap it around their neck at the same time, which requires the breadth of their hands to be added to the neck circumference. Therefore, in staff's view, 12 inches is a safe length for the headrail area of a window covering, whereas the 8 inches of cord length that is used to define the allowed short cord could be anywhere on the window covering. For further discussion on this topic, see Tab B and Tab I of Staff's Final Rule Briefing Package.

Accordingly, the final rule allows retractable cords as long as the exposed cord is limited to a maximum of 12 inches from the bottom of the headrail in any state of operation, and the other requirements in § 1260.2(d) are met to ensure full retraction and durability.

4. Consideration of Large Window Coverings

At least eight commenters, including WCMA and seven businesses, raised the concern that available technologies to address the strangulation hazard, such as manual cordless systems, are difficult to implement for very large products. Various commenters also stated that there is an increased presence of taller windows in homes, which will lead to a higher number of taller window coverings installed in homes. Regardless of the height, the hazard patterns associated with window covering cords are the same. Furthermore, the ANSI/WCMA–2018 voluntary standard does not contain a height limit for in-scope window coverings for either stock or custom products. Staff has determined that it is feasible to implement, for example, rigid cord shrouds on window coverings that are larger than 96″ tall. Tab C of Staff's Final Rule Briefing Package.

Because the hazard patterns associated with larger window coverings are the same as hazard patterns seen in shorter window coverings, the potentially increased number of installations of taller window coverings in residences, and the feasibility of applying safer technologies on these products, the Commission will not exclude taller products from the scope of the rule.

Tabs C and F of Staff's Final Rule Briefing Package discuss a later effective date for very tall custom window coverings that raise or lower. The Commission, however, concludes that delaying implementation for two years and thereby creating a novel scheme bifurcated by the height of a window covering, as recommended by staff, is not justified. Although larger-size window coverings may have some additional challenges in complying with the rule, the Commission does not agree with staff that the development and logistics phases for larger-size window coverings require 24 months after publication of the final rule, and concludes that the 180-day effective date period specified by statute can reasonably be applied. First, manufacturers have been aware of CPSC's intention to issue a rule for one year already. CPSC's draft rule for custom window coverings has been available on our website since October 2021, and the proposed rule with a 180-day effective date was published in January 2022. Second, as stated in Staff's Final Rule Briefing Package and in this preamble, Canada's similar rule on window covering cords became effective earlier this year, and the rule applies fully to larger-sized window coverings. Manufacturers have already had two years to design, develop, and test solutions specifically for larger-sized custom window coverings, to come into compliance with Canada's rule. Third, stock window coverings of all sizes are subject to ANSI/WCMA–2018, which also has led to development of cordless solutions that may be transferable to the largest sizes of 10 feet or more in vertical length. Finally, for very tall windows, curtains may provide a readily available substitute for styles of custom window coverings that raise or lower.

F. Window Coverings Substantially Comply With the Voluntary Standard

Section 9(f)(3)(D) of the CPSA requires that when a voluntary standard has been adopted and implemented relating to a risk of injury, to proceed with a final rule, the Commission must find either that compliance with such voluntary standard is not likely to result in the elimination or adequate reduction of such risk of injury; or that it is unlikely that there will be substantial compliance with such voluntary standard. WCMA, the trade association for window coverings and the body that created the voluntary standard, stated in a comment on the ANPR (comment ID: CPSC_2013–0028–1555) that there has been substantial compliance with the voluntary standard ANSI/WCMA since its first publication, and Tab E of Staff's NPR Briefing Package contains a more detailed description of staff's assessment of substantial compliance with the voluntary standard. CPSC received no comment in opposition to the Commission's preliminary determination of substantial compliance in the NPR. Based on the forgoing, the Commission determines that a substantial majority of window coverings sold in the United States comply with ANSI/WCMA–2018. However, as explained throughout this

[31] Letter can be found at: *https://www.regulations.gov/document/CPSC-2013-0028-3664.*

[32] BSI (1990) as cited in Norris, B., & Wilson, J.R. (1995). CHILDATA: The handbook of child measurements and capabilities—Data for design safety. London: Department of Trade and Industry.

preamble and in the final rule, ANSI/WCMA–2018 is inadequate to address the risk of injury associated with custom window coverings.

III. Response to Comments on the NPR

CPSC received 2,060 comments on the NPR for custom window coverings during the comment period, and staff received two late comments in July 2022, which CPSC also considered. Additionally, CPSC held an oral hearing on the proposed rule on March 16, 2022, during which seven presenters also provided comments. All comments, meeting logs, and correspondence regarding custom window coverings have been included on *Regulations.gov* under the CPSC docket number for this rule: CPSC–2013–0028. Below we summarize and respond to significant issues raised by commenters.

A. General Support or Opposition

Comment 1: At least 114 commenters expressed support for the proposed rule. Some commenters stated that, given the hidden nature of the hazard and severity of the risk, a mandatory standard is necessary. Victims' families expressed hope that this rule will prevent corded products, not only in private residences, but also in hotels, rental properties, military housing, public buildings, and in effect, any place where children could be injured or killed in a window covering cord incident, so that no family will bear the pain of losing a child on a window covering cord.

At least 1,842 commenters were against the proposed rule, most suggesting that a regulation will have a negative economic impact on the window covering industry. At least 440 comments stated that the proposed rule is either overreaching or unnecessary because: commenters believe that the current requirements in the ANSI/WCMA–2018 standard are strong; the risk of injury is low; consumers without young children would be adversely impacted by removing corded products; consumers need more window covering options and choices; and businesses will be limited in meeting consumer needs.

Response 1: The Commission agrees that a mandatory rule is required to address the unreasonable risk of injury associated with corded custom window coverings. Staff's NPR and Final Rule Briefing Packages demonstrate that requiring inherently safe custom window coverings is feasible, and that the rule will not affect the utility or availability of custom window coverings, but could affect their cost. However, the net increase in cost for consumers is as little as approximately $24 every time a household replaces *all* of its custom window coverings approximately every 10 years. *See* Table 9, *infra,* and Tab F of Staff's Final Rule Briefing Package (showing that the estimated net cost increase to replace 12 window coverings ranges from $23.67 using less expensive products to $218.82 using more expensive custom window coverings). The Commission finds that this is a reasonable cost to ensure that children avoid death or serious injury on window covering cords.

The feasibility of safer window coverings, and the fact that consumers will pay more for safer window coverings, has already been shown in the stock window covering market. Stock window coverings that meet ANSI/WCMA–2018 requirements for stock products are manufactured to be safe, without regulatory intervention. Voluntary compliance with the ANSI/WCMA standard for stock products did not cause a decline in revenue, by either units or by total revenue, as most of the industry transitioned to cordless-only products, even though the price of some stock coverings nearly doubled. Moreover, Canada's mandatory rule on window coverings is similar to the final rule, and CPSC staff identified no evidence from the Canadian market of a significant reduction in consumer choice as a result of their rule. Rather, the Canadian market has reacted with cost-effective substitutes and redesigned products. The Commission expects a similar result in the U.S. market.

Data show that the strangulation hazard associated with window covering cords is silent, quick, and hidden to consumers. Also, the hazard overwhelmingly involves the death of a child, and in many other cases, a serious injury, such as coma, paralysis, or problems controlling movement; sensory disturbances, including pain; seizures; cognitive and memory deficits; long-term or permanent vegetative state, requiring tracheotomy and gastrointestinal tube feeding. As commenters from victims' families report, the death of a child on a window covering cord results in severe pain and suffering that never goes away.

B. Voluntary Standard

Comment 2: Most of the businesses, including manufacturers, dealers, designers, and sellers who are opposed to the rule, stated that the voluntary standard process has led to substantial improvements in window covering safety, and furthermore, that a mandatory rule is not necessary. However, other commenters, including at least 70 victims' families, consumers, and consumer organizations, stated that a mandatory standard is necessary to address the hazard associated with custom window coverings, because the voluntary standard still allows products with hazardous cords to be sold.

Response 2: Staff has worked closely with the voluntary standards organization, WCMA, to develop and revise the ANSI/WCMA A100.1 standard over the past 26 years. The Commission agrees that the 2018 version of the voluntary standard has significantly reduced the risk of strangulation from stock window coverings, and from inner cords on both stock and custom products. However, the ANSI/WCMA–2018 standard does not eliminate or adequately reduce the risk of injury associated with custom window coverings. Similarly, Tabs B, C, and I of Staff's Final Rule Briefing Package indicate that even though the draft ANSI/WCMA–2022 is an improvement on ANSI/WCMA–2018, if adopted, the revised standard could allow retractable cords with a hazardous length of cord when pulled, and continuous loops with tension devices that pose a strangulation hazard.

Based on staff's review of available technologies for use in manufacturing safer window coverings (Tab C of Staff's Final Rule Briefing Package), the Commission determines that custom window products can be made as safe as stock window coverings, by meeting the same cord requirements. Stock product compliance with ANSI/WCMA–2018 did not cause a decline in revenue, by either units or by total revenue, even though the price of some stock coverings nearly doubled. When Canada issued a similar rule to prevent window covering cord strangulations, the Canadian window covering market responded with cost-effective substitutes and redesigned products.

C. Data Issues

1. NEISS Versus CPSRMS

Comment 3: WCMA stated that the 34 injury reports for custom products from NEISS were combined with anecdotal reports received by CPSC and that the NPR Briefing Package did not explain how NEISS data injury reports were added to the other incident data, and how CPSC ensured that no double-counting occurred.

Response 3: The CPSC data counts are not duplicative. For example, for the data presented in the NPR where staff integrated the reports from NEISS with anecdotal reports in CPSRMS, staff compared the individual NEISS nonfatal injuries with the reports received through CPSRMS, by considering the

injury date, victim age and sex, and the injury scenario description, and staff ensured that no double counting of incidents occurred for the nonfatal incidents.

2. Low Risk

Comment 4: At least 185 commenters, including 158 businesses, suggested that the risk associated with corded window coverings is low and advancements have been made in the voluntary standard that further reduced the hazard. Some commenters compared the number of deaths associated with corded window coverings to other products.

Response 4: The strangulation hazard to young children from window covering cords is serious, with most incidents resulting in death. The strangulation hazard is a ''hidden hazard,'' because many consumers do not understand or appreciate the hazard, and do not take appropriate steps to prevent death and injury from window covering cords. Warning labels and education campaigns have failed to prevent deaths and injuries. Strangulation is quiet, and incidents have occurred with parents in the same room. Telling caregivers to watch children is insufficient to address the risk; for instance, parents leave their children in rooms considered safe, such as a bedroom, or caregivers may be giving attention to other children when a strangulation incident occurs.

As explained above, the ANSI/WCMA–2018 standard, does not adequately address the strangulation risk associated with custom window coverings. However, the ANSI/WCMA–2018 standard does effectively address the hazard for stock products, and its implementation for stock products did not cause a decline in revenue, by either units or by total revenue. Manufacturers can apply similar technologies used in stock window coverings, as well as additional mechanisms, such as retractable cords and loop cord and bead chain restraining devices, to make custom products safer without impacting utility or availability of products, and with a reasonable cost increase per household.

Many commenters cited the anecdotal data that staff presented in the NPR Briefing Package as an indicator of a downward trend in strangulation incidents and a reason why CPSC should not finalize the rule. However, as stated in the NPR, the Commission has no assurance that the data on window covering cord strangulations includes all incidents that may have occurred, either fatal or nonfatal. In the NPR, the Commission stated that the incident data represent a *minimum* number of incidents that are known to have occurred. 87 FR 1022. Additionally, reporting of incidents to CPSRMS is ongoing. For example, since the data analysis was completed for the NPRs in 2021, the number of fatalities reported has risen to eight (from three, as initially reported) in 2020, and six (from zero, as initially reported) in 2021. We expect that these numbers will likely increase over the next year as CPSC receives more data.

D. Economic Issues

1. Alternative Methods for the Regulatory Impact Analysis

Comment 5: Institute for Policy Integrity and WCMA suggested that instead of, or in addition to, a comparison of costs versus benefits, CPSC could have performed a breakeven analysis, citing the Office of Management and Budget (OMB) guidance (Circular A–4) that this method can be appropriate when the benefits cannot be quantified.

Response 5: The Commission agrees that there are unquantifiable benefits for the final rule. However, the benefits in this case can be estimated based on more than 10 years of incident data. Given that CPSC has data for strangulation deaths and has assessed that the final rule would address the hazard patterns, staff was able to calculate benefits and costs associated with the final rule. Furthermore, recognizing that there are possible variations in costs or benefits to consider, staff conducted a sensitivity analysis, including looking at a children's value of statistical life (VSL) of three times the VSL for adults, as discussed in the NPR, as well, and found that in some cases, this type of increased VSL for children could result in the rule having a quantified net benefit. For the final rule, we also discussed the additional unquantifiable benefits, because not all benefits of the rule are represented in the benefits analysis.

Additionally, as one commenter pointed out, the CPSA requires only that the benefits of a CPSC rule ''bear a reasonable relationship to its costs,'' 15 U.S.C. 2058(f)(3)(E), and, as explained in § 1260.4(i) of the regulatory text, the Commission finds such a reasonable relationship exists here. In addition, CPSC is an independent regulatory agency, not an Executive Branch agency, and CPSC is not subject to the requirements in Executive Order (E.O.) 12866 or 13563 that require the agency to ''justify'' the costs, or to comply with OMB Circular A4.

2. Cost of Safer Products

Comment 6: At least 579 commenters, including 331 businesses, stated that safer window coverings are too expensive for some consumers; regulations will increase the cost of window coverings; and motorized window coverings are cost-prohibitive for many consumers.

Response 6: Market data on stock window coverings do not support the commenters' hypothesis regarding the inability of consumers and businesses to adjust to meaningful safety requirements. Voluntary compliance with the ANSI/WCMA–2018 standard for stock products did not cause a decline in revenue, by either units or by total revenue, as most of the industry transitioned to cordless-only products, even though the price of some stock coverings nearly doubled. Multiple commenters representing manufacturers and retailers noted that sales of cordless stock products have *increased* in the past few years, thus, demonstrating consumer demand for cordless products that protect against the death or injury of children as an acceptable replacement for hazardous corded products, even at a higher price.[33]

In 2019, moreover, Canada published the new Corded Window Coverings Regulations to restrict the length of cords and the size of loops allowed on window coverings sold in Canada; the requirements apply to all products, both stock and custom. The evidence from the Canadian custom window coverings market is that the transition to cordless options in the custom market has been relatively inexpensive for consumers. Staff observed that many designs are priced the same for cordless wand options as for the previous corded design, while motorized options add less than $100 to the retail price for commonly ordered sizes.

Lastly, in Table 17 in Tab F of Staff's Final Rule Briefing Package, Table 9, *infra,* staff provides estimated net costs to replace 12 custom window coverings per household, about every 10 years, that are compliant with the rule, showing as little as $24 to replace less expensive vinyl or metal products and up to a net increase of about $219 to replace expensive soft sheer blinds. The Commission finds that the estimated net increase per household, representing a price increase of only about 5% of the total costs of replacing all custom window coverings every 10 years, is a reasonable cost increase to ensure that all children who live or visit the home going forward, are not exposed to the

[33] Based on Euromonitor annual revenue estimates and D&R (2021).

risk of strangulation on a window covering cord.

3. Commercial Establishments

Comment 7: At least 12 businesses raised issues about mandating safer window coverings in commercial and educational buildings and suggested an exemption. Three commenters stated that in an emergency situation, such as a lock down, schoolteachers should be able to close the window coverings quickly and that new systems may require teachers to climb up ladders to operate the window covering, which is impractical and time consuming. One manufacturer stated that based on the NPR, the standard appears to intend to address potential hazards of window coverings in residences, but the scope of the proposed rule covers all custom products. Given the broad interpretation of the definition of ''consumer products'' under the CPSA, the commenter expressed the belief that many of the strictly commercial products could be subject to the regulation, unless the Commission makes clarifying changes to its definition of ''custom window covering.''

Response 7: CPSC generally has jurisdiction over window coverings that are produced or distributed for the use of consumers, as long as the product is customarily produced or distributed for consumer use. 15 U.S.C. 2052(a)(5). Products that do not fall within the CPSA's definition of ''consumer product'' would not be subject to this rule. However, custom window coverings that are produced or distributed for consumer use in residences, schools, recreation, or otherwise, fall within the scope of CPSC's jurisdiction. CPSC staff is not aware of products that are sold solely for use by workers in a specialized context that are not also available for the use and enjoyment of consumers who visit such businesses. If consumers have access to custom window coverings, and are subject to the potential harm, the product is within CPSC's jurisdiction and the safety benefits of this final rule applies to these products.

4. Competition From Overseas Manufacturers

Comment 8: Several commenters claimed that U.S. manufacturers cannot compete with less costly imports, and that unless a firm imported products in bulk, the cost of making many products cordless is more than the cost of the entire imported product. Commenters stated that the rule would make it more difficult to compete with foreign products, especially those from China.

Response 8: This comment is not specifically relevant to custom window coverings, which are the subject of this rulemaking. Custom window coverings may, in fact, be less affected by lower-cost foreign supply than stock window coverings, which have had strong cord safety requirements since 2018. Regardless, imported products will be subject to the same requirements as products made in the United States. The economies of scale should be the same for manufacturers of any nation. We anticipate that the expanded demand for cordless mechanisms should lower the costs of those mechanisms in the medium term, due to economies of scale.

5. Impact on Businesses

Comment 9: At least 1,007 commenters (of which about 938 identified themselves as businesses) stated that the proposed rule would cause a significant impact on their businesses. Particularly, small custom window covering retailers commented that the rule would reduce sales and raise costs. Large suppliers commented that they intended to require licensed dealers to purchase new ''sample books'' costing thousands of dollars each. Large suppliers and associations also provided data on estimated costs of retooling and costs of components at the wholesale level.

Response 9: As explained in the Staff's NPR Briefing Package, CPSC anticipates a significant impact on small businesses in the short term, as firms transition their product lines to comply with the final rule. However, the impact may be less than estimated, given the enforcement of Canada's window covering regulation beginning in May 2022. Companies that sell in both Canada and the United States have already redesigned their custom offerings to be compliant with the Canadian regulation, which is substantively similar to the final rule. These companies already have stock of compliant product designed and ready to sell through small dealers and interior designers.

Although the window covering manufacturing sector is highly fragmented, the custom part of the market is concentrated, with a few large suppliers accounting for approximately 40 percent of the industry revenue. The large suppliers are multinational companies with distribution in multiple countries. This means that those large suppliers already have compliant products available for the Canadian market, and any incremental costs of redesign for the U.S. market will largely fall on those relatively large companies, rather than on their small distributors and dealers. If suppliers in this industry choose to force small distributors to buy new sample books, as alleged by some suppliers, that decision is in no way a requirement of this rule, nor is it an inevitable consequence of this rule.

6. Small Versus Large Businesses

Comment 10: One commenter suggested that a regulation will give larger window covering corporations an unfair advantage because hard window coverings (blinds composed of slats or vanes) can comply with the rule, but small manufacturers who make soft window coverings (composed of a continuous roll of material) cannot comply.

Response 10: Stock window coverings that comply with ANSI/WCMA–2018 are available in both soft and hard types, and implementation of safer window covering technologies has been proven for both types of window coverings. CPSC expects significant cost impacts on small manufacturers of custom products, as discussed in the Regulatory Flexibility Analysis, but these costs are not associated with certain window covering types. The cost impacts of a rule on operating cords for custom window coverings vary by product type, as detailed in Tab F and summarized in Tab G of Staff's Final Rule Briefing Package.

7. Stockpiling Should Not Be Prohibited

Comment 11: One online retailer of blind and shade repair parts suggested that companies should be allowed to purchase whatever products they deem necessary or prefer. This same commenter also asserted that the NPR specifies no consequence for violating the rule and was unclear who will be enforcing the rule.

Response 11: The anti-stockpiling provision is being finalized as proposed, subject to a conforming change to make the implementation of this provision consistent with the 180-day effective date that was proposed and is being adopted. The final rule reflects a balance between the competing policy goals of addressing the hazard and also accounting for realistic supply-chain limits and considering the compliance costs for businesses, and particularly those costs for small entities. A less-specific base period, or a higher proportion above the base production amount, would allow more noncompliant units to be manufactured and sold, which could reduce the burden to industry. However, it would also reduce safety benefits to consumers and force suppliers of compliant units to compete against a larger stockpiled

supply of noncompliant, likely cheaper, units for a longer period of time. Custom products are typically made to order, so it is unlikely that a firm would manufacture large quantities in advance of demand. Therefore, this anti-stockpiling provision should not adversely impact manufacturers' normal operations. However, firms will need to modify their window coverings to comply with the requirements, and the modifications may be costly. Accordingly, CPSC believes it is appropriate to prevent stockpiling of noncompliant custom window coverings.

If a manufacturer or importer violates any provision of a mandatory rule, including the anti-stockpiling provision, CPSC can enforce that provision using authority under section 19(a)(1) of the CPSA, which prohibits the sale, offer for sale, manufacture for sale, distribution in commerce, or importation into the United States, any consumer product that is regulated under the CPSA, that is not in conformity with an applicable consumer product safety rule. 15 U.S.C. 2068(a)(1). CPSC's authority allows for corrective actions, or recalls, refusal of admission and/or seizure of products at the ports, and civil penalties for failure to conform to required regulations.

8. Unquantified Benefits Are Larger Than Estimated

Comment 12: The Institute for Policy Integrity and A. Finkel, economist, suggested that the regulatory analysis in the NPR underestimated the benefits of the rule, by not discussing unquantified, but potentially very large, benefits of the rule. The unquantified benefits suggested included parental grief, reduced cost of litigation for manufacturers and retailers, and averted recall costs. Two commenters specifically cited the example of a Federal Motor Vehicle Safety Standard for rear visibility cameras in passenger cars, where the regulatory impact analysis discussed the large unquantified benefits of reducing parental grief and emotional trauma from causing the death of one's own child, or a relative, or neighbor. One commenter pointed to that standard as an example of an ''experience good,'' where the standard caused people's preferences to change to favor a safety technology with which they were previously unfamiliar.

Response 12: Such potential unquantified benefits would be included in an increased value of statistical life, or VSL, for children. A discussion of this fact is included in the sensitivity analysis in Tab F of Staff's Final Rule Briefing Package and section V of this preamble. CPSC's Injury Cost Model (ICM) takes pain and suffering into account, so a portion of parental grief benefits are accounted for and would be accounted for in an increased VSL for children. Moreover, at this time CPSC cannot accurately assign a value to the potential that people might experience a shift in preferences towards a safer product, although the evidence of continued growth of demand for cordless stock coverings does indicate this is a potential benefit for custom window coverings as well.

9. Value of a Statistical Life

Comment 13: Two commenters (Institute for Policy Integrity and A. Finkel) suggested that CPSC use different references and different theoretical justifications to derive a value of statistical life (VSL) for children.

Response 13: As evidenced by the many alternative sources and several methods suggested by the commenters, no consensus exists (either in the U.S. or internationally) on what value or method regulators should use in their regulatory analyses. The current range of values in the peer reviewed literature for a child's VSL ranges from less than 1 to more than 7 times the value of an adult VSL, as discussed in more detail in the regulatory analysis. CPSC staff provided a discussion of this range to the sensitivity analysis in Tab F, but did not change in its analysis the core estimate of children's VSL. As noted in the sensitivity analysis, increasing a child VSL to three times the base VSL, $31.5 million, would result in a calculated net benefit for the final rule of $14.3 million.

E. Consumer Issues

1. Accessibility Issues With Disabled Population, People With Short Stature and Seniors

Comment 14: At least 383 comments (331 businesses, 8 consumers, and 44 unknown) stated that having a short cord introduces accessibility issues for various consumers such as people in wheelchairs or who otherwise are challenged to access cords higher up. Some commenters questioned whether the proposed rule is compliant with the Americans with Disabilities Act.

Response 14: The final rule provides several ADA-consistent options to address accessibility of safer window coverings. Sections 308.2 and 308.3 of the 2010 ADA Standards for Accessible Design specify forward and side reach distances that would be applicable to window coverings. Section II.C.7 of this preamble and Tab B of Staff's Final Rule Briefing Package explain the ADA standard and the window covering options in detail.

2. Acknowledgement of Risks Before Ordering

Comment 15: At least 48 commenters (45 businesses) stated that they either currently ask or suggest that consumers acknowledge the strangulation risk associated with cords before ordering a custom corded window covering.

Response 15: Even accepting that consumers may acknowledge the strangulation risk associated with the corded window coverings that they are purchasing, and assuming these acknowledgements are informed rather than pro forma, the hazard with the corded window covering remains. Household members other than the consumer who signed the document, including guests and small children who cannot comprehend the danger, as well as future residents of the home and their guests, also can be unaware of the hazard.

3. Climbing on Ladders or Other Furniture Is Unsafe

Comment 16: At least 56 commenters, including 42 businesses, stated that climbing on ladders or other furniture is unsafe for consumers, particularly older consumers. Due to the short cord requirement, these commenters assert that climbing would be required to operate hard-to-reach window coverings. Some commenters provided statistics on falls.

Response 16: Consumers ordering custom window coverings are unlikely to choose a custom design that requires them to climb on furniture to open their window coverings. Alternative solutions to climbing that can safely replace the existing hazardous cords include poles to operate cordless systems, rigid cord shrouds, loop cord and bead chain restraining devices, as well as retractable devices that would be within easy reach of users. Accordingly, the Commission finds that the final rule would not lead to the unsafe behavior envisioned by these commenters.

4. Exclude Draperies

Comment 17: Several commenters, including two businesses, argued that draperies should be excluded from the rule. One stated that there are no ''aesthetic'' alternatives to cords for draperies. Another commented that there is no evidence that draperies are unsafe because the cords are on pulleys attached to the floor.

Response 17: Multiple cordless options for draperies are available, including wands and motorized

controls, as well as pulling the draperies on the traverse rod by hand, with no cord or other control. Section I.E of this preamble details fatal incidents involving draperies. Corded draperies are common, and often do not have the cord on a loop or attached to the floor as the commenter claims. On the other hand, of the different types of window coverings analyzed in the final regulatory analysis, draperies had the lowest cost of compliance with the final rule, estimated to be near zero, because the cost of a control wand is approximately equal to the cost of the cord it replaces.

5. Informing the Customer

Comment 18: About 593 businesses stated that they regularly educate their clients on safer operating cord options during the ordering process and that consumers make an informed choice by being aware of the hazards associated with the corded product. At least 120 commenters stated that people should be made aware of the dangers and then make their own choice when purchasing a custom window covering.

Response 18: CPSC encourages sellers to inform and educate consumers on the operating systems that contain hazardous cords. However, information and education are not always provided, and where provided they do not negate products being sold and installed with hazardous cords, and that custom window coverings will remain in consumers' homes for many years. If consumers do not appreciate the hidden nature of the hazard, they may choose to buy a hazardous window covering even when children are present in the home. Moreover, as explained above, custom window coverings have a long product life. When a home is sold or rented, a new resident, potentially residents with children, will likely live with the hazardous window covering, without having been warned of the associated hazards. Due to the ineffectiveness of warning labels on such products, even a permanent label may not get the attention of the user. 87 FR 1034–35. Information and education remain important to address the existing cord hazard, but as the incident data reflect, education and warning labels do not adequately address the risk of injury.

6. Parental Responsibility

Comment 19: At least 24 commenters, including 17 businesses, suggested that parents are responsible for supervising their children around window coverings.

Response 19: As reviewed in the NPR and in Staff's NPR Briefing Package, ordinary parental supervision is unlikely to effectively eliminate or reduce the strangulation hazard, because even young children are left unsupervised for a few minutes or more in a room that is considered safe, such as a bedroom or family room. 87 FR 1036–37. Moreover, incidents have occurred even when family members were in the same room as the strangled child. *Id.* Strangulation with cords requires only a few minutes to occur and happens silently. A more effective solution to the window covering cord hazard is to require that window coverings are inherently safe as sold and do not have hazardous operating or inner cords.

7. Rental Leases and Real Estate Documents

Comment 20: To inform renters as well as purchasers, one business suggested informing and disclosing the hazards associated with corded window coverings at the time of rental or sale of the property. Two businesses (Comfortex Window Fashions and Inviting Interior Style) suggested home inspections when dwellings change hands.

Response 20: CPSC agrees with the commenters' concerns regarding window coverings included in rental units where tenants with young children may not have the option of choosing safer window coverings. Moreover, the sale process of a residence is an opportunity to inform buyers about the dangers associated with corded window coverings or to remove and replace hazardous window coverings. Certain state and local authorities may have regulations in place with regard to window coverings in rental homes. However, CPSC does not have the authority to require such practices. CPSC regulates consumer products rather than the terms of property rental or sale contracts, which are generally in the purview of state and local governments. Mandatory visual inspections of installations of corded window coverings would not prevent deaths and injuries without an additional safety rule, because hazardous loops can still be accessible even when cord loops are correctly installed and with tension (*see* Tab I of Staff's Final Rule Briefing Package).

8. Replacement of Old Window Coverings

Comment 21: At least 12 commenters, including 10 businesses, stated that the rule would discourage people from replacing their decades-old, non-compliant blinds and shades containing dangerous cords with new compliant window coverings because they would not want to give up corded products.

Response 21: Market data on stock window coverings does not support the commenters' hypothesis. Voluntary compliance with ANSI/WCMA–2018 for stock products did not cause a decline in revenue, by either units or by total revenue, as most of the industry transitioned to cordless only products. Multiple commenters representing manufacturers and retailers noted that sales of cordless stock products have *increased* in the past few years, thus demonstrating consumer demand for cordless products as an acceptable replacement for corded products. Canada has transitioned to safe window coverings with a similar absence of disruption.

9. Require Professional Installation

Comment 22: As an alternative to the rule, two commenters (one interior designer and one business owner) suggested that CPSC should require that custom window coverings be professionally installed, stating that this would help small businesses and improve consumer safety.

Response 22: CPSC does not have the authority to regulate professional services or home inspections. Implementing these practices would also be more costly than the final rule, without providing as many benefits. The typical cost for adding cordless options to a custom window covering ranges from less than $10 (and in some cases nothing) to about $100, except for some very large, motorized options. This price range is far below the cost of hiring a professional installer for corded custom window coverings. In general, commenters' alternatives would raise costs for installed custom window coverings, while addressing few of the known incidents and fatalities, as well as not addressing the known hazard of corded window coverings.

10. Twisting Wand Takes Time and Effort and Use Is Inconvenient; Poles May Not Work for Elderly

Comment 23: At least 38 commenters, including 36 businesses, stated that using a wand is time consuming and may be difficult for some consumers.

Response 23: The wands that CPSC staff evaluated for this rulemaking are easy to learn about and use. We anticipate that further innovation will make wands even more efficient and easy to use. Some traditional wands used to rotate horizontal slats have thin diameters, which can make such wands more difficult to use compared to rigid cord shrouds, which staff evaluated to have thicker diameters and are more

comfortable to use. The final rule does not require the use of wands. The final rule allows the use of many other types of safe operating systems instead of a wand, such as cordless, retractable cords, cord shrouds, cord restraining devices, or motorized systems.

F. Warnings, Public Awareness, and Education

Comment 24: At least 5 businesses contended that warning labels on the products should be relied on to address the strangulation hazard as they inform the consumer about the hazard. At least 2 other commenters stated that warning labels and educational efforts were tried, did not work, and are insufficient to address the strangulation risk.

Response 24: The NPR explains that consumers are less likely to look for and read safety information on products that they use frequently and are familiar with. 87 FR 1035. Incident data for window covering cords confirms this research, as most of the incident units had a visible warning label on the product. Even well-designed warning labels will have limited effectiveness in communicating the hazard on this type of product. However, the Commission agrees that public awareness is a crucial component in making safe purchasing decisions and safely using window covering products at home. Public information campaigns are on-going. CPSC and the Window Covering Safety Council (WCSC) have joined forces to raise awareness of strangulation risks presented by window covering cords, and October has been designated ''Window Covering Safety Month'' by CPSC and the WCSC since 2003.

Currently, the Commission does not have information to quantify the effectiveness of public information campaigns on reducing the risk of injury associated with corded window coverings. However, information and education campaigns on corded window coverings that have been continuing for decades have not adequately reduced or eliminated serious injuries and deaths, as evidenced by the continuing number of fatalities. Accordingly, the Commission will not rely on education campaigns to address the unreasonable risk of injury associated with operating cords on custom window coverings.

G. Other Product-Related Hazards

1. Access to Battery To Recharge or Replace

Comment 25: At least 15 businesses stated that, with respect to motorized solutions, replacing or swapping batteries located on the headrail is difficult for consumers as they need to climb on ladders. At least 4 commenters also stated that the new rule would increase the use of batteries, which is wasteful for the planet.

Response 25: Staff reports that they found examples of window coverings where the batteries are stored in the bottom rail, making it easier for consumers to recharge or replace batteries. Batteries are rechargeable to reduce waste, and some window coverings are hardwired or solar powered.

2. Button Batteries Used in Remote Controls

Comment 26: At least 3 commenters (WCMA, Parents for Window Blind Safety, and Independent Safety Consulting) suggested that remote controls that contain button batteries should comply with either ASTM F963 or other applicable button battery standards, or simply that battery compartments should have a screw.

Response 26: On August 2, 2022, Congress passed H.R. 5313, or Reese's Law, and the President signed the bill into law on August 16, 2022. Reese's Law directs the Commission to establish a mandatory standard to protect children and other consumers against hazards associated with the accidental ingestion of button cell or coin batteries used in consumer products. Accordingly, staff is preparing a notice of proposed rulemaking for Commission consideration to implement this law. The Commission anticipates that window covering remote controls that use button cell or coin batteries will fall within the scope of that proceeding.

3. Continuous Loops With Tension Devices Are Safe

Comment 27: At least 429 commenters stated that continuous loops with properly attached tension devices are safe and should not be eliminated. Commenters said that windows that are high up, windows over a sink, and windows behind a couch need continuous loops. Other commenters stated that some consumers do not want tension devices attached to the wall.

Response 27: Incident data demonstrate that tension devices may come off the wall or may not be installed at all, and continuous loops may not be taut enough to prevent strangulation incidents. Through testing, staff found that children may be able to insert their head into a properly installed continuous loop system even with a tension device. Accordingly, the Commission concludes that window coverings operated with continuous loops with tension devices can still leave hazardous loops accessible to children and do not adequately address the risk of strangulation.

For the final rule, CPSC staff analyzed how a window covering that is behind a piece of furniture or sink would be operable with a continuous loop if the loop has a tension device to keep the loop taut. Tab B of Staff's Final Rule Briefing Package provides a visual comparison. Tab B explains that the continuous loop would likely remain unattached to the wall with a tension device so that the consumer can pull the loop towards him/her to operate. This means that the continuous loop remains accessible to children and hazardous. Given children's ability to climb and incident data demonstrating this hazard scenario, the Commission concludes that continuous loops that are contained in a rigid shroud or restrained within a passive restraining device are much safer for children and potentially easier to operate for both access and ease of use by consumers.

4. Consumer Preference for Corded Products

Comment 28: At least 2 businesses suggested that they have customers who prefer to use corded window shades because they find them easier to use. Some businesses stated that the ANSI/WCMA–2018 requirement to limit the free hanging cord length to 40% of the product length generated customer complaints, because some of their clients cannot reach the cord with ease. Some businesses stated that they sell custom blinds to nursing homes and retirement homes; the users demand that the cords be long enough to be reached, which usually means 40 inches or more.

Response 28: The final rule's effect on sales for some particular products is accounted for in the regulatory analysis in section V of this preamble, and Tab F of Staff's Final Rule Briefing Package. However, stock products currently on the market that comply with ANSI/WCMA–2018 are available in a variety of materials, sizes, and types to meet consumer needs. Also, custom product requirements in the final rule allow for a variety of solutions to ease the operation of window coverings, including poles for cordless systems, rigid cord shrouds and loop cord and bead chain restraining devices, motorized window shades, and retractable cords. All of these options provide easy reach for consumers. Based on the comments, the final rule for custom window coverings specifically permits corded window coverings that use a single cord retractor, rigid cord shroud, or a cord restraining device, to

create more options for non-motorized safe window coverings, provide options for accessible custom window coverings, and allow for ease of use.

5. Cord Cleats

Comment 29: About 42 commenters stated that cord cleats are provided with corded window coverings and address the hazard.

Response 29: Cord cleats do not adequately address the strangulation hazard associated with window covering cords because such devices rely on consumers to wrap the excess cord around the cord cleat every time they raise or lower the window covering. Incident data demonstrate that consumers may not wrap the cords around the cleat every time they operate the window covering, which results in dangling operating cords with which children can strangle. In one incident, although caregivers normally wrapped the cord around the cleat, on the day of the incident, cords were not wrapped, and the child accessed the cords after climbing on a couch.[34] Further, cord cleats may be accessed by children. In one incident:

> [a] four year old boy moved a small plastic table over near the window, climbed upon the table and reached up and removed the shortened pull cord for the window covering from the ''safety'' cleat. He pulled the cord out and wrapped it around his neck. He then jumped off of the table. The cord broke and he fell to the floor. His parents were able to remove the cord from his neck. The boy recovered from his injuries.[35]

6. Effective Date

Comment 30: At least 401 commenters stated that the proposed six-month-effective-date is very short to meet the proposed requirements; 94 commenters suggested at least one year effective date, three commenters suggested at least an 18 month to 2 years effective date, and seven commenters suggested at least 2 years to comply with the rule. Two commenters submitted the extent of the delays in obtaining equipment, transit time in both sea and air to get equipment and components from overseas suppliers, and delays in lead times for raw materials. One manufacturer, Safe T Shade, stated that ''a 180-day lead time is more than sufficient for a painless Industry implementation,'' and consumer organizations stated that a mandatory standard should be issued as soon as possible.

Response 30: Under section 9(g)(1) of the CPSA, the Commission must find good cause that a later effective date is in the public interest, to extend the effective date of the final rule beyond 180 days. Although most of the comments seeking a later effective date were not specific or substantiated, Table 1a in the Appendix to Tab C of Staff's Final Rule Briefing Package presents the timelines and criteria for creating compliant custom window coverings, such as tooling, transit, and inventory, that a few commenters offered. These commenters provided timelines of 9 to 20 months in obtaining and transporting equipment/materials from overseas suppliers, citing long lead times of 4 to 12 months to acquire necessary equipment and materials, and an additional 1 to 4 months upon delivery to assemble component inventory. Another commenter stated an additional delay related to continued COVID–19 disruptions. Staff believes a later effective date would allow manufacturers more time to redesign, distribute costs of compliance along the entire year, or discontinue product variants that cannot meet compliance. Staff therefore recommended a 1-year effective date, which is greater than the 30–180 day effective date range provided for in CPSA section 9(g)(1), 15 U.S.C. 2058(g)(1), for most custom window coverings.

The Commission has considered the information supplied by commenters and staff's analysis, but does not agree that the development and logistics phases for most custom window coverings to come into compliance requires a one-year effective date from the time of publication of the final rule, nor that a delay beyond the default statutory maximum of 180 days (15 U.S.C. 2058(g)(1)) is in the public interest. First, staff's economic analysis in Tab F does not conclude that a longer effective date creates a material reduction in the estimated costs of the rule, and commenters do not show that this would be the case.

Second, methods of eliminating the window covering cord hazard have been developed for stock window coverings under ANSI/WCMA–2018, and those same methods can be used for, or at a minimum can be adapted to, custom window coverings.

Third, more than two years ago, Canada issued a rule on window covering cords for all window coverings, whether stock or custom, without exceptions. The NPR analyzed the requirements of the Canadian rule and discussed the effective date of that rule. Canada's rule has been enforced since May 2022. Manufacturers of custom window coverings had two years to come into compliance with Canada's rule, and the solutions developed for Canada should be usable in the United States as well. Indeed, a number of commenters arguing for a delayed effective date are known to sell in Canada, and yet they did not address how the Canadian rule impacts compliance with CPSC's final rule. Nor has any party suggested that implementation of the Canadian requirements is causing major disruption in that country.

Fourth, manufacturers have been aware of CPSC's proposed rule for at least one year already, since October 2021 when Staff's NPR Briefing Package was posted on CPSC's website. Moreover, the proposed rule, with a 180-day effective date, was published in the **Federal Register** in January 2022. Thus, a 180-day effective date from publication of a final rule comes on top of a substantial period of time during which manufacturers were aware of the likelihood of a rule.

Accordingly, the Commission does not find good cause in the public interest to delay the effective date for the majority of custom window covering products. A 180-day effective date—the maximum period stated in section 9(g)(1) of the CPSA (15 U.S.C. 2058(g)(1))—allows sufficient time for industry to meet any additional design, development, testing, and logistics concerns with technologies already in use (cordless, short cords, and inaccessible cords) and also specifically with regard to the additional methods to comply (rigid cord shrouds, loop cord and bead chain restraining devices, and retractable cords). The record, including staff's analysis, reflects that cordless options are available for nearly all window covering types and many stock product substitutes are available to consumers.

7. Free Hanging Cords

Comment 31: At least three commenters stated that free hanging cords (meaning a cord that is longer than 8 inches and not restrained) should be prohibited because they pose a higher strangulation risk to a child. At least one manufacturer stated that free hanging cords are a large portion of their business.

Response 31: Free-hanging window covering cords are associated with 18 of 36 custom product strangulations or near strangulations (74 free-hanging cord incidents of the overall total of 209 incidents). Removing free-hanging cords

[34] Id.

[35] Lee, K. (2014). Mechanical Engineering Response to Window Coverings Petition. CPSC memorandum to Rana Balci-Sinha, Project Manager, Window Coverings Petition CP 13–2. U.S. Consumer Product Safety Commission, Rockville, MD. Accessed at *https://www.cpsc.gov/s3fs-public/pdfs/blk_pdf_PetitionRequestingMandatoryStandardforCordedWindowCoverings.pdf.*

from custom window coverings will reduce deaths and injuries. The window covering industry appears to be moving away from free-hanging cords, as WCMA, in their latest draft balloted revision, draft ANSI/WCMA–2022, proposes to remove cord lock systems, and thus free hanging operating pull cords from all custom products, regardless of type, size, and weight of the window covering. As stated earlier, the final rule contains several alternatives to hazardous free-hanging cords, such as rigid cord shrouds, loop cord and bead chain restraining devices, and retractable cords, in addition to manual and motorized cordless lift systems that can replace hazardous cord lock systems.

8. Coverings for High Windows or Windows That Are Hard-to-Reach Are Impossible To Use With an 8-Inch Cord

Comment 32: At least 385 commenters stated that window coverings located at higher locations on a wall, windows behind the kitchen sink, or windows behind furniture, cannot be operated with an 8-inch cord.

Response 32: The rule allows for several safe alternatives for operating cords besides using an 8-inch cord. For custom products in hard-to-reach locations, under the final rule consumers have the option to choose from, among others that could be developed:

- Cordless blinds with an access wand
- Motorized window covering with a remote control
- Single cord retractor systems with a 12-inch stroke
- Rigid cord shroud
- Cord restraining device

9. Manual Spring System Is Not Durable

Comment 33: At least 8 businesses stated that manual spring systems are not durable and break easily.

Response 33: Manual cordless lift systems, popular in stock products, often use a series of constant force springs. If the springs break, the window covering fails safe, because cordless window coverings do not have accessible operating cords. Any spring has a limited fatigue life (number of cycles to failure). Manufacturers can control fatigue life of the lift system by selecting the proper spring size, strength, and number of springs for the lift system.

10. Off-the-Shelf Products

Comment 34: At least 3 commenters suggested that stock products are more dangerous than custom products because stock products are allowed to have longer lengths of accessible pull cords than custom window coverings, stock product customers are less likely to get safety information, and stock products are likely to be installed by consumers who may be unfamiliar with the hazard.

Response 34: Stock window coverings that are compliant with the existing voluntary standard, ANSI/WCMA–2018, cannot have lengthy pull cords as the commenters suggest. All stock products must be cordless, have short cords (equal to or shorter than 8 inches), or have inaccessible cords. Although consumers may not be as knowledgeable as professional installers, most of the custom products involved in the identified strangulation incidents were installed by professionals and still lacked safety devices. Several public commenters state that installers may remove the tension device from a product if the customer does not want it mounted, which allows a free-hanging hazardous loop on the product. Educating consumers is paramount particularly to reduce the risk associated with corded window coverings already installed in consumers' homes. However, as discussed in Staff's Final Rule Briefing Package, education campaigns are insufficient to adequately address the hazard, and manufacturing inherently safe custom window coverings that comply with the requirements for stock products in ANSI/WCMA-2018 is required to address the risk of injury or death.

11. Product Options/Limited Choices for Consumers

Comment 35: At least 321 commenters suggested that consumers may want to have different window covering cord options to serve their different needs and that reducing consumer options is not preferable.

Response 35: The final rule leaves room for operating system options. Manufacturers can develop new operating systems that do not have accessible cords or implement existing solutions such as cordless systems, shrouded or continuous loop systems, or shrouded pull cord systems. These technologies are available and are being used for both stock and custom window coverings.

Suppliers of custom window coverings to the Canadian market have already adjusted their products to comply with Canada's window treatment regulations, which are substantially similar to this final rule. Compliance to the Canadian rule has apparently resulted in changes to advertised product lines; such as those shades that could not meet the inner cord requirements (*e.g.,* light pleated shades, narrow metal blinds) appear to have been removed from the market, as well as some of the largest sizes of other categories. Manufacturers are offering cost-effective redesigns to other product types that are cordless. In addition, manufacturers are offering new designs to replace the discontinued options in Canada, such as shades with light blocking material on the bottom and sheer on the top as a replacement for ''top down/bottom up'' (TDBU) shades. CPSC has no evidence from the Canadian market of a significant reduction in consumer choice. Rather, the market has reacted with cost-effective substitutes and redesigns.

12. Retractable Cords Work Well and Are Safe

Comment 36: At least 149 commenters stated that retractable cords are safe and should not be eliminated as an option to make operating cords inaccessible.

Response 36: CPSC is not aware of incidents associated with retractable cords, and based on the comments received, the final rule provides a retractable cord lift system option for custom window coverings, provided that the system only exposes up to 12 inches of cord from the bottom of the headrail as a stroke length. The Commission adopts a 12-inch cord limit based on staff's analysis (Tab B) demonstrating that it is extremely unlikely for a strangulation to occur in this scenario for both younger and older children, as well as lack of incidents within 12 inches of the headrail.

13. Technology Uavailable To Cover All Products in All Sizes and Weights

Comment 37: At least eight commenters, including WCMA, stated that non-motorized cordless lift systems are not feasible for large window coverings. Commenters stated that continuous loop cords with tie down devices are capable of lifting any size window covering. At least 3 commenters stated that manual cordless lift systems have limitations such as size and weight of the window covering that could limit the application (*e.g.,* for faux wood blinds, a general estimate for the maximum dimensions for cordless is 96 inches wide by 48 inches high and 60 inches wide by 84 inches high). Commenters also stated that there is an increased presence of taller windows in homes.

Response 37: Because hazard patterns in taller window coverings are the same as hazard patterns for shorter window coverings, the potentially increased number of installations of taller window coverings in residences, and the

feasibility of applying safer technologies on these products, the Commission will not exclude taller products from the scope of the rule.

The Commission also considered the comments provided by manufacturers about the limitations for larger products to accommodate the manual cordless systems. Staff reviewed the incident data to determine the largest products that were involved in incidents: the longest product that was involved in a nonfatal incident had a reported length of 112 inches (width was 124 inches). A reported fatality involved a roller shade; based on other dimensions provided in the in-depth investigation (IDI), staff estimates the length as 119 inches (width was estimated as 54 inches).

Based on staff's market research, rigid cord shrouds are currently limited to operating window coverings up to 96 inches tall. Staff reviewed the available technologies on the market and determined that it is feasible to implement rigid cord shrouds, cord or bead chain restraining devices, or retractable cords on larger window coverings (Tab C). Accordingly, the final rule allows for the use of these methods, as long as the products meet the durability performance requirements in the rule.

14. Top-Down-Bottom-Up (TDBU) Shades

Comment 38: About 33 commenters believe that TDBU shades would be eliminated if the proposed rule becomes final. They believe that TDBU shades are safe and should not be eliminated.

Response 38: The final rule does not eliminate TDBU window coverings. Under the final rule a TDBU shade can be manufactured as long as it does not contain hazardous operating cords as stated in the final rule (meaning accessible cords longer than 8 inches). Moreover, inner cords are subject to the final rule under section 15(j) of the CPSA, which incorporates by reference the ANSI/WCMA–2018, requiring that accessible inner cords cannot create a hazardous loop. If the inner cords fail to meet this ANSI/WCMA–2018 requirement, manufacturers can redesign the product to meet the standard. For example, some manufacturers were concerned that TDBU products could not meet the Canadian inner cord requirement (which are more stringent than ANSI/WCMA–2018 requirements). However, Canadian custom window treatment retailers have already adjusted their products to comply with Canada's requirements for inner cords. Manufacturers are offering cost-effective redesigns for TDBU products to replace the discontinued options, such as shades with light blocking material on the bottom and sheer on the top as a replacement for TDBU shades.

15. Training Installers

Comment 39: At least 353 businesses stated that they train their installers so that window coverings and safety devices are properly mounted.

Response 39: Over the lifetime of product use, even properly installed external safety devices such as tension devices may break or come off the wall. Also, consumers who do the installation by themselves may not have the knowledge or ability to properly install the device. Importantly, staff's testing found that a child can fit their head through a properly tensioned cord (Tab I); cord tension devices do not eliminate or adequately reduce the risk of strangulation. Safer options to reduce the risk of injury include passive safety devices that do not rely on consumer behavior to prevent the hazard.

H. Stories of Loss

Comment 40: More than 40 commenters either were personally affected by a window covering cord injury or death or know someone who was affected by a child's death on a window covering cord.

Response 40: The Commission appreciates the courage of these families in sharing their difficult stories of a tragic loss. To each of these parents, family members, and loved ones, we are deeply sorry for your loss. The Commission has taken the information about the interactions and conditions involved in the incidents into consideration in developing its final rules for stock and custom window coverings, in an effort to prevent the tragedy of losing a child to a window covering cord.

I. Comments of the Chief Counsel for the Office of Advocacy, SBA

Comment 41: The Office of Advocacy of the Small Business Administration (Office of Advocacy) states that CPSC's Initial Regulatory Flexibility Act (IRFA) analysis relies on incomplete information and advises that the Commission publish an updated analysis for comment.

Response 41: The Final Regulatory Flexibility Analysis (FRFA) incorporates the changes suggested by the Office of Advocacy. Tab G of Staff's Final Rule Briefing Package provides an estimate for the potential firms that may meet the criteria for small businesses and a more detailed discussion.

Comment 42: The Office of Advocacy stated that CPSC should consider alternatives for the final rule that reduce the burden to small businesses while still meeting the stated objectives of increased child safety. The Office of Advocacy expressed concerns about the costs to comply, time to comply, and whether an updated voluntary standard would adequately address the risk of injury.

Response 42: The Commission considered alternatives to reduce the potential burden of the final rule to small businesses. Alternatives the Commission considered are listed in the Regulatory Flexibility Act analysis in the NPR and this final rule, and included continued work on education efforts, narrowing the scope of the rule, and updating the voluntary standard. For the final rule, the Commission considered an exemption for very large window coverings in response to comments from the SBA's Office of Advocacy and the public, but ultimately determined that it is feasible to make larger window coverings safe in a timely way, and the hazard associated with larger window coverings is the same as that of smaller products. Section II.E.4 of this preamble details the Commission's consideration of larger-sized window coverings.

After considering CPSC staff's analysis and information from commenters, the Commission sets a final rule effective date of 180 days from publication in the **Federal Register** for all custom window coverings, as proposed in the NPR. Section III.G.6 of this preamble explains the Commission's rationale, and that unless the Commission finds good cause in the public interest to delay an effective date, the statutory maximum effective date is 180 days from publication in the **Federal Register**. An effective date of 180 days should be sufficient to complete any additional design, development, testing, and logistics, and to adopt the additional methods of compliance provided in the final rule (rigid cord shrouds, loop cord and bead chain restraining devices, and retractable cords). *See supra,* section III.G.6. This will also allow manufacturers, including small businesses in the U.S. and larger and foreign firms that supply U.S. retailers that are small businesses, more time to source necessary component parts. Many of the firms supplying the U.S. market with custom window coverings, including some small businesses, also supply the same products to the Canadian market, where a similar rule was enforced in May 2022. The industry has already had years to come into compliance with the Canadian rule. So too, CPSC's draft rule has been available

for at least one full year already. As CPSC staff has advised, moreover, compliant stock substitutions are available for most window covering types. These stock solutions also provide a source of design and materials for bringing custom window coverings into compliance.

The reasons for not relying entirely on any voluntary standard are discussed elsewhere in this preamble.

Comment 43: The Office of Advocacy stated that CPSC should consider exceptions in situations where corded window coverings are a necessity, such as under the Americans with Disabilities Act.

Response 43: Section 9 of the CPSA requires the Commission to consider the effects of a rule on elderly and disabled persons. Section II.C.7 of this preamble provides an analysis of the issues raised by commenters with regard to the ADA.

IV. Description of the Final Rule

The need for this rule under sections 7 and 9 of the CPSA arises from a difference in the existing voluntary standard's requirements for operating cords on stock window coverings and operating cords on custom window coverings. Section 4.3.1 of ANSI/WCMA–2018 sets forth the performance requirements for operating cords on stock window coverings (*see* Table 8). The Commission has determined that these operating cord performance requirements are adequate and effective to reduce or eliminate the unreasonable risk of strangulation to children 8 years old or younger on window covering cords (see section II.A of this preamble). Accordingly, in the separate proceeding for stock window coverings, the Commission is incorporating by reference the ''readily observable'' safety characteristics for window covering cords, as addressed by ANSI/WCMA–2018, into a rule that deems the absence of these safety characteristics a substantial product hazard under section 15(a) of the CPSA.

Conversely, the Commission has determined that the requirements for operating cords on custom window coverings in section 4.3.2 of ANSI/WCMA–2018 are inadequate to address the risk of strangulation to children. Accordingly, the Commission finalizes this rule to require that operating cords on custom window coverings comply with the same performance requirements established in section 4.3.1 of ANSI/WCMA–2018 for operating cords on stock window coverings, instead of the weaker requirements in section 4.3.2. The final rule also contains two methods, integrated into a window covering as sold, to make operating cords inaccessible to children 8 years and younger: rigid cord shrouds and retractable cords, and one method to make accessible continuous loops non-hazardous: loop cord and bead chain restraining devices. ANSI/WCMA–18 and the draft ANSI/WCMA–2022 allow these methods with somewhat different requirements from the final rule. Hundreds of commenters requested that we allow these options to remain for custom products. Staff assessed the methods and advised that they could be made safer to address the risk of injury. Accordingly, these methods are allowed in the final rule provided that the methods meet the durability requirements in the final rule.

TABLE 8—COMPARISON OF CUSTOM PRODUCT REQUIREMENTS IN ANSI/WCMA–2018, NPR, AND THE FINAL RULE

Performance requirements	Custom products in ANSI/WCMA 2018	Custom products NPR	Custom products final rule
(No operating cords (cordless)	Allowed	Allowed	Allowed.
Short cord (8 inches or shorter) in any state.	Allowed	Allowed	Allowed.
Inaccessible operating cords	Allowed	Allowed	Allowed.
Rigid cord shrouds (can be used with any operating system).	Allowed if Rigid Cord Shroud meets ANSI/WCMA–2018 test requirements.	Allowed if Rigid Cord Shroud meets ANSI/WCMA–2018 test requirements plus proposed deflection and deformation tests.	Allowed if Rigid Cord Shroud meets ANSI/WCMA–2018 test requirements plus deflection and deformation tests.
Single retractable cord lift system	Allowed, no limit in cord length under tension.	Asked for comments	Allowed provided that it meets complete retraction at 30-gram, non-cord retraction device, and stroke length limited to 12 inches below the headrail.
Non-hazardous Cord Loops using Cord and Bead Chain Restraining Device.	Allowed if device meets ANSI/WCMA–2018 tests.	Asked for comments	Allowed if device meets ANSI/WCMA–2018 tests and test for UV followed by cyclic test and deflection test.
Accessible Operating Cords longer than 8 inches.	Allowed	Prohibited	Prohibited.
Continuous Loops with Tension Devices	Allowed	Prohibited	Prohibited.
Cord Loop Lift Systems	Allowed	Prohibited	Prohibited.

A. Description of Section 1260.1—Scope and Definitions

Section 1260.1, scope and definitions, describes the scope of the final rule and provides relevant definitions for the final rule. Definitions for terms defined in ANSI/WCMA–2018 remain consistent with the voluntary standard. Section 1260.1(a) limits the scope of the final rule to operating cords on custom window coverings because the risks of injury associated with inner cords on custom window coverings, and with operating and inner cords on stock window coverings, are addressed in a separate rule under section 15(j) of the CPSA. Section 1260.1(a) provides an effective date of 180 days after publication of the rule in the **Federal Register**.

Section 1260.1(b) incorporates by reference several definitions in section 3 of ANSI/WCMA–2018. The final rule clarifies the definition of a ''Rigid Cord Shroud'' to include the inaccessibility requirement in Appendix C of ANSI/WCMA–2018, and includes two additional terms to accommodate specification of two additional methods to make custom window covering cords inaccessible to small children, ''Retractable Cord,'' and ''Loop Cord and Bead Chain Restraining Device.'' Below we set forth the terms and explain how these terms are defined in the ANSI standard.

- ''Custom window covering,'' definition 5.01 of ANSI/WCMA–2018, is a window covering that is not a stock window covering.
- ''Stock window covering'' definition 5.02 of ANSI/WCMA–2018, is a product that is a completely or substantially fabricated product prior to being distributed in commerce and is a stock-keeping unit (SKU). For example, even when the seller, manufacturer, or distributor modifies a pre-assembled

product by adjusting to size, attaching the top rail or bottom rail, or tying cords to secure the bottom rail, the product is still considered stock under the ANSI standard. Online sales of the product or the size of the order, such as multi-family housing, do not make the product a non-stock product. These examples are provided in ANSI/WCMA A100.1–2018 to clarify that as long as the product is ''substantially fabricated'' prior to distribution in commerce, subsequent changes to the product do not change its categorization.

• ''Operating cord,'' definition 2.19 of ANSI/WCMA–2018, is a cord that the user manipulates to use the window covering, such as lifting, lowering, tilting, rotating, and traversing. An example operating cord is pictured in Figure 7 of this preamble.

• ''Cord shroud,'' definition 2.09 of ANSI/WCMA–2018, is material that is added around a cord to prevent a child from accessing the cord and to prevent the cord from creating a loop. Defining a cord shroud in the rule is necessary because the rule includes a test for a ''rigid cord shroud'' in § 1260.2(b), to meet the inaccessibility requirement in section 4.3.1.3 of ANSI/WCMA–2018.

• ''Cord retraction device,'' definition 2.08 of ANSI/WCMA–2018, is a passive device which winds and gathers cords when tension is no longer applied by the user.

The definition of ''rigid cord shroud'' in § 1260.1(c) is based on work by the voluntary standards task group in 2018. A ''rigid cord shroud'' is not currently defined in the standard but is a hard material that encases an operating cord to prevent a child from accessing an operating cord. For the final rule, the Commission is clarifying in the definition that ''inflexible material'' is material that makes the cord inaccessible as defined in Appendix C of ANSI/WCMA A100.1–2018.

The final rule includes two new definitions in § 1260.2(d) and (e), to define the two additional methods to make custom window covering cords inaccessible or non-hazardous to children 8 and under: retractable cords and loop cord and bead chain restraining device. These definitions are similar to the definitions in draft ANSI/WCMA–2022, with modifications. A ''retractable cord'' is defined as ''a cord that extends when pulled by a user, and fully retracts when the user releases the cord, rendering the cord inaccessible as defined in Appendix C of ANSI/WCMA A100.1–2018.'' A ''loop cord and bead chain restraining device'' is defined as ''[a] device, integrated to and installed on the window covering, that prevents the creation of hazardous loop from an accessible continuous operating cord.''

The final rule also includes a new definition in § 1260.1(f) for ''operating interface,'' because this term is used to describe requirements for retractable cord devices. An ''operating interface'' is defined as the part of the window covering that the user physically touches or grasp by hand or a tool to operate the window covering, for example a wand to tilt the slats of the product or the bottom rail to raise or lower the product. This definition is similar to the definition in draft ANSI/WCMA–2022, with modifications.

B. Explanation of § 1260.2—Requirements for Operating Cords on Custom Window Coverings

Section 1260.2 sets forth the requirements for operating cords on custom window coverings. Section 1260.2(a) requires that each operating cord on a custom window covering comply with section 4.3.1 of ANSI/WCMA–2018 (operating cord not present (section 4.3.1.1)); operating cord is inaccessible (section 4.3.1.3); or operating cord is eight inches long or shorter in any position of the window covering (section 4.3.1.2), instead of the current requirements for operating cords on custom products in section 4.3.2 of ANSI/WCMA–2018. Section 1260.2(a) includes a revision from the NPR, to allow compliance with section 4.3.2.5.2 of ANSI/WCMA-2018, which is the provision in the voluntary standard setting forth requirements for loop cord and bead chain restraining devices. This addition in the final rule responds to the comments requesting that the rule not eliminate the use of continuous loop cords for custom window coverings by allowing their continued use as long as the hazardous cords are encased in an integrated loop cord or bead chain restraining device that meets the requirements of the rule.

Section 1260.2(b) contains the requirements and test methods for rigid cord shrouds, when they are used to comply with § 1260.2(a). Section 1260.2(b)(1) and (2) contain the test methods to confirm whether a cord shroud is ''rigid.'' The requirements for rigid cord shrouds are not currently in the ANSI/WCMA standard. CPSC staff developed these test methods based on work by an ANSI/WCMA task group in 2018, regarding confirmation that a cord shroud is rigid enough to ensure that the shroud cannot be wrapped around a child's neck or form a hazardous u-shape. The rigid cord shroud requirements include two tests, the ''Center Load'' test and the ''Axial Torque'' test. The Center Load test verifies the stiffness of the cord shroud, by measuring the amount of deflection in the shroud when both ends are mounted and a 5-pound force is applied at the mid-point. This test ensures the shroud is not flexible enough to wrap around a child's neck. The Axial Torque test verifies the cord shroud's opening does not enlarge to create an accessible cord opening when the shroud is twisted.

CPSC is not aware of incidents related to current products with rigid cord shrouds and concludes that shrouds that meet the modifications to the ANSI/WCMA standard will address the strangulation hazard posed by accessible cords. Section II.A of this preamble and Tabs G and H of Staff's NPR Briefing Package contain further explanation and the language related to rigid cord shrouds.

Section 1260.2(c) contains requirements for retractable cords, when they are used to comply with § 1260.2(a), to make an operating cord inaccessible. The requirements in this section were developed by CPSC staff to ensure that children cannot pull on retractable cords and gain sufficient length to wrap the cord around their neck. The requirements limit the stroke length for the cord to 12 inches from the headrail, and require the user interface to be a pole or wand, or other non-cord interface, to prevent the creation of a hazardous loop. The requirements also provide for UV and durability testing, as provided in ANSI/WCMA–2018.

Section 1260.2(d) provides requirements for loop cord and bead chain restraining devices, which are intended to prevent the formation of a hazardous loop. The final rule requires that these devices meet the requirements of section 6.5 of ANSI/WCMA–2018, in addition to UV and durability tests added by the final rule.

C. Explanation of § 1260.3—Prohibited Stockpiling

The purpose of § 1260.3 is to prohibit manufacturers and importers from stockpiling products that will be subject to a mandatory rule. The Commission's authority to issue an anti-stockpiling provision is in section 9(g)(2) of the CPSA. 15 U.S.C. 2058(g)(2). Section 1260.3(a) prohibits manufacturers and importers of custom window coverings from manufacturing or importing custom window coverings that do not comply with the requirements of the final rule in the 180-day period between the date of the final rule's publication in the **Federal Register** and the effective date of the rule, at a rate that is greater than 120 percent of the rate at which they manufactured or imported custom

window coverings during the base period for the manufacturer. The base period is described in § 1260.3(b) as any period of 180 consecutive days, chosen by the manufacturer or importer, in the 5-year period immediately preceding promulgation of the final rule. ''Promulgation'' means the date the final rule is published in the **Federal Register**.

D. Explanation of § 1260.4—Findings

The findings required by section 9 of the CPSA are discussed in the regulatory text.

E. Explanation of § 1260.5—Standards Incorporated by Reference

Section 1260.5 contains the information required by the Office of the Federal Register (OFR) to incorporate by reference the requirements in section 4.3.1, and the relevant definitions in section 3, of ANSI/WCMA–2018. As set forth in section XII of this preamble, the Commission has met the OFR's procedural requirements to incorporate by reference ANSI/WCMA–2018.

F. Explanation of § 1260.6—Severability

Section 1260.6 contains a severability clause. This final rule includes multiple sections and requirements that aim to address the risk associated with strangulation of children 8 years old or younger on custom window coverings with hazardous operating cords, including the scope of the rule to include all custom window coverings, regardless of size, definitions included in the rule, performance requirements for custom window coverings, and performance requirements for methods to make cords inaccessible or non-hazardous. Because the rule includes these multiple requirements, the rule also includes a provision stating the Commission's intent that if certain requirements in the rule are stayed or determined to be invalid by a court, the remaining requirements in the rule should continue in effect.

V. Final Regulatory Analysis

Section 9(f)(2) of the CPSA, 15 U.S.C. 2058(f)(2), requires a consumer product safety rule published in the **Federal Register** to include a final regulatory analysis that contains:

(A) A description of the potential benefits and potential costs of the rule, including costs and benefits that cannot be quantified in monetary terms, and the identification of those likely to receive the benefits and bear the costs.

(B) A description of any alternatives to the final rule which were considered by the Commission, together with a summary description of their potential benefits and costs and a brief explanation of the reasons why these alternatives were not chosen.

(C) A summary of any significant issues raised by the comments submitted during the public comment period in response to the preliminary regulatory analysis, and a summary of the assessment by the Commission of such issues.

The information and analysis in this section is based on Tab F of Staff's Final Rule Briefing Package.

A. Potential Benefits and Costs of the Rule

Based on estimates from the NEISS and CPSC's Injury Cost Model, CPSC staff estimates that 7.6 nonfatal, medically treated injuries and 6.8 fatalities occur annually among all corded window coverings associated with cord types that are within scope of this rule (Chowdhury 2022). Staff estimates the societal costs of these injuries to be about $72 million annually. Overall, staff found that fatalities account for an overwhelming majority of societal costs at $71.4 million annually, and that nonfatal injuries account for about $498,000 in societal costs annually.

Staff estimates the societal cost of deaths and injuries attributable to custom window covering products, that would not otherwise be addressed by the 15(j) rule's provisions for inner cords on both stock and custom window coverings, to be $31.6 million annually (about 44 percent of the total), based on a CPSC staff review of incidents and values, using the ICM and a Value of Statistical Life (VSL) of $10.5 million. Staff calculated the present value of the societal cost [36] of deaths and injuries for each blind type, based on each type's expected product life. Staff combined these societal unit costs with corded custom window covering sales in 2020, to generate a gross annual societal cost of $24.35 million. Finally, staff adjusts this estimate for the expected effectiveness of the final rule to estimate a total annual benefit of $23 million.

The final rule would impose costs on manufacturers of custom window covering products. Manufacturers would likely pass much of incremental per-unit manufacturing cost to consumers in the form of higher prices. Based on component cost estimates, assembly/manufacturing costs, consumer surplus loss, and proportions of domestic manufacturing, the incremental cost per corded custom window covering produced would range from nothing to approximately $35 and is highly dependent on product type. The final rule would not result in any cost increases for already cordless custom window coverings. Accordingly, staff combined the value of the number of *corded* custom window coverings that were shipped in 2020, estimated to be $15.85 million, with the per-unit cost increase to generate an aggregate cost estimate ranging between $54.4 million and $114 million. An additional cost estimate for the research, development, implementation, time, and retooling required for some corded product amounts to approximately $14.7 million. Including this value results in a total aggregate cost estimate range of $54.4 million to $129 million annually.

To provide an accessible framework to perceive how the additional cost of the final rule impacts consumers, staff converted costs and benefits of the rule into a calculated net cost per household, based on the data point that the average detached, single-family household has 12 window coverings. Table 9 contains the estimated household net costs from replacing all window coverings in the home with products compliant with the final rule.

TABLE 9—HOUSEHOLD NET COSTS FROM FINAL RULE

WC types	Mean unit price [1]	Household cost to update WC (pre-rule) [2] = [1] × 12 households	Low-End cost per unit [3]	Benefit per unit [4]	Net per unit [5] = [4] − [3]	Household net cost [6] = [5] × 12 households
Vinyl/Metal	$37.36	$448.32	$3.03	$1.06	($1.97)	($23.67)
Wood/Faux Wood	69.79	837.48	6.38	1.61	(4.77)	(57.24)
Cellular Shade	94.51	1,134.12	5.73	2.04	(3.69)	(44.25)

[36] Calculating the annual societal costs per window covering unit, staff divided that total societal cost by an estimate of 145 million corded custom window coverings in use for the year of 2020, which resulted in a per-unit societal cost of $0.22 per corded custom window covering in use.

TABLE 9—HOUSEHOLD NET COSTS FROM FINAL RULE—Continued

WC types	Mean unit price [1]	Household cost to update WC (pre-rule) [2] = [1] × 12 households	Low-End cost per unit [3]	Benefit per unit [4]	Net per unit [5] = [4] − [3]	Household net cost [6] = [5] × 12 households
Pleated Shade	54.53	654.36	2.20	2.12	(0.08)	(0.94)
Roman Shade	69.36	832.32	5.63	2.43	(3.20)	
Roller Shade	64.04	768.48	5.19	2.04	(3.15)	(37.83)
Soft Sheer	250.00	3,000.00	20.28	2.04	(18.24)	(218.82)

Table 9 shows the net price increase to replace 12 window coverings based on the type of custom window covering. For example, horizontal blinds composed of metal or vinyl have a low-end, per-unit cost estimate of $3.03 and a per-unit benefit estimate of $1.06 (assuming the base VSL). This translates into a net cost of the final rule of $1.97 (assuming the base VSL) for metal/vinyl horizontal blinds. Using the assumption of 12 window coverings per household, this equates to a net cost of the rule (above the benefits provided) of $23.67 per household every time a household updates their custom window coverings, about once every 10 years. For metal or vinyl horizontal blinds, $23.67 is slightly more than 5 percent of the total cost of $448.32 that a household would spend to update their window coverings.

The cost impact from the final rule may be less than estimated, however, due to the enforcement of Canada's regulations beginning in May 2022.[37] Companies that sell in both Canada and the United States have already redesigned their custom offerings to be compliant with the Canadian regulations, which are substantively similar to those being finalized here. Those companies may already have stock of compliant product designed and available to sell to the U.S. market through small dealers and interior designers.

Based on staff's estimated benefits and costs, which does not account for efficiencies resulting from prior safety innovation in stock window coverings or custom window coverings for Canada, net benefits (*i.e.,* benefits minus costs) for the market of custom window coverings (*i.e.,* excluding stock window covering products, and the benefits of the separate rule for inner cords on custom window coverings) amounts to approximately −$31.3 million to about −$106 million annually.

Staff also conducted a sensitivity analysis for a few variables, including the value of statistical life (VSL). In the NPR, the Commission invited comment on a potentially higher VSL for children, up to three times the base level (3 × $10.5 million for a total of $31.5 million). 87 FR 1044–45. CPSC received comments in support of a child-focused VSL, with alternative methods suggested. Staff considered a higher VSL for children in the sensitivity analysis. With a VSL value of $31.5 million, benefits exceed costs by approximately $14.3 million annually. Staff also highlights the unquantified benefits of the final rule, including the emotional distress level of caregivers that will be reduced by the final rule. This benefit is not directly accounted for in the primary VSL estimate of $10.5 million. The value of the shock or perceived guilt related to a caregiver's inattentiveness could be significant, as it could result in large reductions to physical wellbeing or income loss.

To issue this final rule, the Commission must find that the costs of the rule bear a reasonable relationship to the benefits of the rule. A reasonable relationship between costs and benefits requires the Commission to exercise judgement, and to balance whether the risks involved warrant the cost to address the risks. The Commission has conducted this balancing, and finds that the predicted benefits expected from the rule bear a reasonable relationship to the anticipated costs of the rule because, among other reasons, the severity of the injury is usually death to a child, the cost per household is reasonable particularly in light of the long life of the products, and similar operating cord requirements have been successfully implemented, without substantial market disruption, for stock window coverings in the U.S. as well as for stock and custom window coverings in Canada. *See* § 1260.4(i) of the regulatory text.

B. Regulatory Alternatives to the Final Rule

1. No Action Alternative

Under this alternative the status quo would be maintained. No costs are associated with this alternative. However, this alternative does not adequately address the fatal and nonfatal injuries involving corded custom window coverings.

2. Rely Upon or Improve Voluntary Standard for Window Coverings

Another alternative is to adopt the recently balloted draft voluntary standard (ANSI/WCMA–2022) as a mandatory standard in this final rule, without waiting for the standard to become effective. In July 2022, WCMA issued a ballot to revise the 2018 voluntary standard. The proposed revisions would prohibit standard operating systems (operating pull cords) and the use of continuous loop systems in custom horizontal blinds only. CPSC staff voted against the ballot on August 15, 2022, stating that hazardous cords remain an option for operating cords on all other custom products other than horizontal blinds,[38] leaving a maximum of 87 incidents (fatal and non-fatal) unaddressed covering the time period from 2009 through 2021.[39] Staff also assessed the balloted draft standard's requirements for retractable cords inadequate because they allow for a 36-inch retractable cord (2 feet longer than the final rule) and because the UV test method allows for testing only a section of a rigid cord shroud (instead of the complete sample). Based on the assessment in Tab I of Staff's Final Rule Briefing Package, the Commission finds that the draft balloted standard is inadequate to address the risk of strangulation to children.

Adopting the balloted draft standard would narrow the benefits as well as the costs. The estimated costs would range from approximately $32 million to $72.5 million, but benefits using the base VSL would be just $9.6 million, leaving an unaddressed potential benefit of $13.4 million representing continued serious injuries and deaths. This unaddressed potential benefit is 58.3 percent of the total $23 million potential benefits (in

[37] *https://laws-lois.justice.gc.ca/eng/regulations/SOR-2019-97/FullText.html.*

[38] CPSC staff letter is available at *https://www.regulations.gov/document/CPSC-2013-0028-3667.*

[39] Includes custom/unknown product categories, and continuous loops/unknown cord types.

value of lives saved and injuries prevented) estimated under the final rule. Hazardous cords would remain an option on custom shades, custom vertical blinds, and curtains/drapes, meaning an estimated 7.4 million units of custom products sold annually going forward.

A related alternative might be for Commission staff to continue participating in, and encouraging safety improvements to, the voluntary standard for window coverings. This option would be similar to the ''no action alternative,'' with the key difference being that the Commission could direct staff to pursue safety improvements in the voluntary standard, including applying relevant conditions on stock products to custom, in the same manner that staff has been pursuing unsuccessfully for many years, as a conditional alternative to a mandatory standard developed by the Commission. The Commission could reconsider a mandatory standard if efforts to improve the voluntary standard on custom products remain unsatisfactory.

This option is unlikely to address the unreasonable risk of injury associated with operating cords on custom window coverings. The protracted and incompletely successful history of the voluntary standard process on this issue demonstrates that continuing to wait for ANSI/WCMA to address the injuries in the voluntary standard will result in additional deaths and injuries to children, with little hope of progress if the Commission does not pursue rulemaking. Based on 26 years of experience with the voluntary standards process for this hazard, the Commission will not choose this option.

As a third alternative, the Commission could wait and see whether ANSI and/or WCMA approve a revised standard, and then either rely upon it as a voluntary standard, or proceed to a final rule with similar provisions as in this final rule. This alternative would either produce a similar cost-benefit ratio as for the final rule adopted here (with lower costs but also lower benefits), or delay the implementation of a rule, like the one here, that more fully addresses the strangulation hazard. This alternative would risk the lives of more children to strangulation on hazardous custom products, and the Commission does not adopt it.

Furthermore, this approach might not allow the full range of consumer protections afforded by this final rule. For example, if the Commission chose to address custom horizontal blinds by relying on a voluntary standard under section 15(j) of the CPSA, then additional methods to make cords inaccessible on horizontal blinds, such as rigid cord shrouds and loop cord and bead chain restraining devices, could not be subject to any requirement that is not ''readily observable,'' and so might not be subject to durability requirements like those in the final rule.

Based on the forgoing, the Commission concludes that the voluntary standards process is unlikely to lead to an adequate, or more beneficial and less costly, outcome for all custom window covering product types in the short or long run.

3. Later Effective Date

The NPR proposed an effective date that is 180 days after the final rule is published in the **Federal Register**. Under section 9(g)(1) of the CPSA, the Commission must find good cause that is in the public interest to extend the effective date of the final rule beyond 180 days. Many commenters stated that CPSC should set a longer effective date for the final rule, as detailed in section III.G.6 of this preamble. The Commission reviewed and considered the commenters' concerns and staff's assessment of them, but finds that good cause in the public interest does not exist to extend the effective date beyond the default statutory maximum of 180 days from publication in the **Federal Register**.

4. Narrow Final Rule to Vertical Blinds, Curtains, and Drapes

The Commission could narrow the final rule to vertical blinds, curtains, and drapes on the grounds that cords are not important to the operation of these products. These products typically offer cordless options at no additional cost for most applications because a plastic rod can be used for operation. Narrowing the final rule to these three product types would lessen the cost impact and make it unlikely that any window covering product would need to be phased out or changed substantially as a result of the rule. Although some consumers may require motorization for these products if operating cords are not available, which would dramatically increase the cost, this is unlikely to be a scenario that applies to many consumers. Some consumers may also prefer decorative cords that exceed the length described in the final rule, which would result in lower utility for these particular consumers should those decorative cords be removed.

Under this alternative, the benefits and costs would be limited to vertical blinds, curtains, and drapes, which accounted for approximately 30 percent of 2020 window covering product shipments. However, the number of injuries and deaths associated with these products represents a small fraction of the total for operating cords on custom window coverings. This would equate to annual net benefits of approximately $7.8 million under the baseline VSL. The estimated net benefits of this option would be greater than the final rule due to the large costs to conform for the other product types, however a large fraction of the deaths and injuries would not be addressed.

5. Continue and Improve Information and Education Campaign

The Commission could seek to improve its current information and education campaign concerning the strangulation hazard associated with corded window covering products. This alternative could be implemented without regard for regulatory action such as this final rule. Based on the continuing number of fatalities associated with window covering cords, however, the effective injury reduction of campaigns, such as those the Commission has sponsored for years, is most likely very small. The Commission will not rely on this option because information and education campaigns appear to be no more than slightly effective at reducing or preventing injuries associated with window coverings.

6. Adopt Canadian Window Covering Mandatory Standard

Under this alternative the Commission could adopt the Canadian Corded Window Coverings Regulations (SOR/2019–97), as it is generally similar to the final rule. Staff estimates that this option would add more costs without adding more benefits than the final rule, although staff notes that it would provide some unquantifiable benefits related to harmonization of product standards for firms operating in both countries. The additional costs under this scenario are associated with requirements in the Canadian regulation that are more burdensome than the final rule, such as the pull force and inner cord requirements for products.[40] Under this alternative, net benefits are less than the final rule as the additional costs are expected to be greater than the

[40] See Tabs G and I of the NPR Staff Briefing Package available at Available at: *https://www.cpsc.gov/s3fs-public/NPRs-Add-Window-Covering-Cords-to-Substantial-Product-Hazard-List-Establish-Safety-Standard-for-Operating-Cords-on-Custom-Window-Coverings-updated-10-29-2021.pdf?VersionId=HIM05bK3WDLRZrlNGogQLknhFvhtx3PD.*

unquantifiable benefit of standard harmonization.

C. Summary of Significant Economic Issues Raised by the Comments

Commenters raised issues regarding CPSC's cost-benefit method, the cost of safer window coverings to consumers, safer window coverings in commercial buildings, competition from foreign manufacturers, the impact of the rule on businesses (including small versus large businesses), the anti-stockpiling provision, unquantified benefits in the NPR, and CPSC's VSL for children. Section III.D of this preamble summarizes and responds to the economic issues raised by the commenters.

VI. Final Regulatory Flexibility Act Analysis

Whenever an agency publishes a final rule, the Regulatory Flexibility Act (5 U.S.C. 601–612) requires that the agency prepare a final regulatory flexibility analysis that describes the impact the rule would have on small businesses and other entities. In this section we summarize information and analysis in Tab G of Staff's Final Rule Briefing Package. A FRFA must contain

(1) a statement of the need for, and objectives of, the rule;

(2) a statement of the significant issues raised by the public comments in response to the initial regulatory flexibility analysis, a statement of the assessment of the agency of such issues, and a statement of any changes made in the proposed rule as a result of such comments;

(3) the response of the agency to any comments filed by the Chief Counsel for the Office of Advocacy of the SBA in response to the proposed rule, and a detailed statement of any change made to the proposed rule in the final rule as a result of the comments;

(4) a description of and an estimate of the number of small entities to which the rule will apply or an explanation of why no such estimate is available;

(5) a description of the projected reporting, recordkeeping and other compliance requirements of the rule, including an estimate of the classes of small entities which will be subject to the requirement and the type of professional skills necessary for preparation of the report or record; and

(6) a description of the steps the agency has taken to minimize the significant economic impact on small entities consistent with the stated objectives of applicable statutes, including a statement of the factual, policy, and legal reasons for selecting the alternative adopted in the final rule and why each one of the other significant alternatives to the rule considered by the agency which affect the impact on small entities was rejected.

A. Reason for Agency Action

The final rule is intended to address an unreasonable risk of strangulation to children 8 years and younger involving corded custom window covering products. An average of 6.8 fatal injuries (excluding inner cords and lifting loops) involving all corded window covering products that have operating cords annually to children less than 8 years old (Tab A, Chowdhury, 2022). The societal costs of these fatal and nonfatal injuries amount to approximately $72 million. The final rule would only address the proportion of these injuries attributable to operating cords on custom products which, based on a CPSC review of 209 reported incidents, would be approximately $31.6 million annually (Tab F, Bailey, 2022).

B. Objectives of and Legal Basis for the Rule

The objective of the rule is to reduce or eliminate an unreasonable risk of serious injury or death to children 8 years old or younger by strangulation on corded custom window coverings, by promulgating a consumer product safety standard pursuant to the CPSA.

C. Comments of the Chief Counsel for the Office of Advocacy, SBA

The Office of Advocacy submitted several points on the proposed rule. Consistent with one of the comments by the Office of Advocacy, the Commission is reducing the burden of the final rule by allowing, in addition to rigid cord shrouds as a method to make cords inaccessible, a retractable cord or a loop cord or bead restraining device, as long as such devices meet the requirements in the final rule. The Office of Advocacy's comments are summarized and responded to in section III.I of this preamble.

D. Significant Economic Issues Raised by the Public

Section III.D of this preamble summarizes and responds to the significant economic issues raised by the commenters.

E. Small Entities to Which the Rule Will Apply

The North American Industry Classification System (NAICS) defines product codes for U.S. firms. Firms that manufacture window coverings may list their business under the NAICS product code for blinds and shades manufacturers (337920 Blind and Shade Manufacturing) or retailers (442291 Window Treatment Stores).[41] Window coverings can be sold in a variety of retail channels and could be listed under a large number of NAICS codes. These could include but are not limited to 442299 (All Other Home Furnishings Stores), 452210 (Department Stores), 452311 (Warehouse Clubs and Supercenters), 454110 (Electronic Shopping and Mail-Order Houses), and 454390 (Other Direct Selling Establishments).

Under SBA guidelines, a manufacturer of window coverings is categorized as small if the firm has less than 1,000 employees (NAICS code 337920). Importers would be considered small if the firm has less than 100 employees. CPSC staff estimates that there are approximately 83 importers that meet the SBA guidelines for a small business (Bailey 2021). Most retailers of window coverings would be considered small if they have sales revenue less than $8.0 million (NAICS codes 442291, 454390). Department stores, warehouse clubs, and electronic shopping and mail order houses must have revenues less than $35 million, $32 million, and $41.5 million, respectively, to be considered small. Based on 2017 Census Bureau Statistics of US Businesses (SUSB) data, there were 1,898 blinds and shades manufacturers, (NAICS 337920), and retailers (NAICS 442291).[42] Of these, 1,840 firms (302 manufacturers and 1,538 retailers) are small entities by SBA guidelines.

Nearly all of the 302 small manufacturers identified are far below the 1,000 employee SBA threshold; 238 of the manufacturers have fewer than 20 employees and 151 have fewer than 5 employees. CPSC staff estimates that the annual revenue for the firms with fewer than 20 employees to be under $250,000.[43] Most of the firms with fewer than 5 employees manufacture custom window coverings on a per order basis. The annual revenue for these manufacturers is most likely below

[41] The two product codes 337920 and 442291 encompass most products in the window coverings market. However, some drapery and curtain manufacturers may be listed under 322230, stationary product manufacturing.

[42] This estimate focuses strictly on firms where window coverings are a majority of the operation. The other NAICS codes provided (322230, 454390, 442299, 452210, 452311, 454110) may include firms participating in the window coverings market but most likely account for a very small share of the firm's operation. In addition, it is possible some retailers of window coverings are listed under NAICS code 541410 Interior Design Services.

[43] Based on Census Bureau SUSB data, a review of firm financial reports, and Dun & Bradstreet reports.

$100,000, based on SUSB payroll data from the U.S. Census Bureau.

F. Compliance Requirements of the Final Rule, Including Reporting and Recordkeeping Requirements

To eliminate the strangulation hazard on cords, the final rule establishes a performance standard that requires custom window coverings to meet the same requirements in section 4.3.1 of the voluntary standard ANSI/WCMA–2018 that apply to stock window coverings. To comply with the performance requirements, all accessible operating cords will need to be removed, made inaccessible, or shortened to less than 8 inches. The final rule provides two methods to make cords inaccessible (rigid cord shrouds and retractable cord devices) and one method that would remove the hazard from an accessible cord (cord or bead restraining device). Products that use one of these methods to meet the requirements must also conduct additional testing on durability, as set forth in the rule.

Under section 14 of the CPSA, as codified in 16 CFR part 1110, manufacturers and importers of general use custom window coverings must certify, based on a test of each product or upon a reasonable testing program, that their window coverings comply with the requirements of the final rule. Manufacturers and importers of custom window coverings that are also children's products, as defined in 16 CFR part 1200, must use a CPSC-accepted third party conformity assessment body to test products for compliance, and issue a certificate of compliance based on such third-party testing. Testing and certification requirements are detailed in section X of this preamble.

G. Costs of the Final Rule That Would Be Incurred by Small Manufacturers

Custom window covering manufacturers would most likely adopt cordless lift operation systems to comply with the final rule. As discussed in Tab F of Staff's Final Rule Briefing Package, the cost to modify window covering lift systems to comply with the final rule ranges from $2.99 to $9.77 per horizontal blind, $2.18 to $35 per shade, and no expected cost increase for vertical blinds and curtains/drapes. CPSC staff estimates of redesign costs—where solutions are not already developed based on the stock window covering market, the Canadian market, or otherwise—equate to approximately $772,500, assuming a 2-year period for purposes of that analysis. Only manufacturers with at least 75 employees are anticipated to perform this investment as this is a significant investment for smaller manufacturers with fewer employees and lower annual revenues. Likely these manufacturers will either purchase the necessary completed hardware or license a patented solution from a larger firm.

However, as noted, the actual impact may be less, due in part to the enforcement of Canada's regulations beginning in May 2022. Companies that sell in both Canada and the U.S. have already redesigned their custom offerings to be compliant with the Canadian regulations, which are substantially similar to the final rule, so already have stock of compliant product designed and ready to sell through small dealers and interior designers.

Manufacturers would likely incur some additional costs to certify that their window coverings meet the requirements of the final rule as required by section 14 of the CPSA. The certification must be based on a test of each product or a reasonable testing program. WCMA has already developed a certification program for window covering products titled ''Best for Kids,'' which includes third party testing of products for accessible cords. CPSC staff assesses this certification would meet the requirements as outlined in section 14 of the CPSA. Based on price quotes from testing laboratory services for consumer products, the cost of the certification testing will range from $290 to $540 per window covering model. Note that the requirement to certify compliance with all product safety rules, based on a reasonable testing program, is a requirement of the CPSA and not of the final rule.

Depending on the type of window covering, a reasonable testing program for general-use window coverings could entail a simple visual inspection of products by the manufacturer. Therefore, the cost of a reasonable testing program for compliance of general use window coverings with the final rule is likely much lower than the cost of conducting a third-party certification test of each product, as required for children's products.

H. Impact on Small Manufacturers

To comply with the final rule, small manufacturers are expected to incur redesign and incremental component costs for some product lines which currently are not available in inaccessible cord variants. CPSC does not expect small manufacturers to suffer a disproportionate cost effect from the final rule as the cost calculations and research were completed on a per unit basis, and CPSC expects little if any direct redesign costs for small manufacturers. CPSC staff estimates that small manufacturers of window coverings are likely to incur, at a minimum, a 2 percent impact to their custom window covering revenue from the final rule. This implies that if custom products account for all of a firm's revenue, then the minimum impact of the final rule is 2 percent of revenue.

Generally, staff considers an impact to be potentially significant if it exceeds 1 percent of a firm's revenue. As the smallest estimate of incremental compliance cost from Panchal (2016) is 2 percent of retail price, the final rule could have a significant impact on manufacturers of custom window coverings. This effect is dependent on the share of annual revenues attributable to custom products. For example, if a small firm only manufactures custom cellular shades, then staff expects the lowest possible compliance cost of 2 percent of retail price. For small importers, the cost effect as a percent of revenue is dependent on the firm's custom window covering imports as a percent of total revenue. Any small importer with at least 50 percent of their revenues related to custom window covering products affected by the final rule could be significantly impacted. This is due to the lowest expected compliance cost equating to 2 percent of retail price, which at a 50 percent custom product share would equate to a 1 percent minimum impact on annual revenues. CPSC expects the final rule to have a significant effect on a substantial number of small firms.

I. Federal Rules Which May Duplicate, Overlap, or Conflict With the Final Rule

CPSC staff has not identified any other Federal rules that duplicate, overlap, or conflict with the final rule.

J. Alternatives for Reducing the Adverse Impact on Small Entities

A FRFA should contain ''a description of the steps the agency has taken to minimize the significant economic impact on small entities consistent with the stated objectives of applicable statutes, including a statement of the factual, policy, and legal reasons for selecting the alternative adopted in the final rule and why each one of the other significant alternatives to the rule considered by the agency which affect the impact on small entities was rejected.'' 5 U.S.C. 604. The Commission considered several alternatives to the final rule that could reduce the impact on small entities.

Alternatives considered are discussed in section V.B of this preamble.

VII. Environmental Considerations

Generally, the Commission's regulations are considered to have little or no potential for affecting the human environment, and environmental assessments and impact statements are not usually required. *See* 16 CFR 1021.5(a). The final rule to establish a safety standard for operating cords on custom window coverings is not expected to have an adverse impact on the environment and is considered to fall within the ''categorical exclusion'' for the purposes of the National Environmental Policy Act. 16 CFR 1021.5(c).

VIII. Paperwork Reduction Act

This final rule contains information collection requirements that are subject to public comment and review by the Office of Management and Budget (OMB) under the Paperwork Reduction Act of 1995 (PRA; 44 U.S.C. 3501–3521). Under the PRA, an agency must publish the following information:

- a title for the collection of information;
- a summary of the collection of information;
- a brief description of the need for the information and the proposed use of the information;
- a description of the likely respondents and proposed frequency of response to the collection of information;
- an estimate of the burden that will result from the collection of information; and
- notice that comments may be submitted to OMB.

44 U.S.C. 3507(a)(1)(D). In accordance with this requirement, the Commission provides the following information:

Title: Amendment to Third Party Testing of Children's Products, approved previously under OMB Control No. 3041–0159.

Summary, Need, and Use of Information: The final consumer product safety standard prescribes the safety requirements for operating cords on custom window coverings, and requires that these cords meet the same requirements for operating cords on stock window coverings, as set forth in the voluntary standard, section 4.3.1 of ANSI/WCMA–2018. These requirements are intended to reduce or eliminate an unreasonable risk of death or injury to children 8 years old and younger from strangulation.

Some custom window coverings are considered children's products. A ''children's product'' is a consumer product that is ''designed or intended primarily for children 12 years of age or younger.'' 15 U.S.C. 2052(a)(2). The Commission's regulation at 16 CFR part 1200 further interprets the term. Section 14 of the CPSA requires that children's products be tested by a third party conformity assessment body, and that the manufacturer of the product, including an importer, must issue a children's product certificate (CPC). Based on such third party testing, a manufacturer or importer must attest to compliance with the applicable consumer product safety rule by issuing the CPC. The requirement to test and certify children's products fall within the definition of ''collection of information,'' as defined in 44 U.S.C. 3502(3).

The requirements for the CPCs are stated in section 14 of the CPSA, and in the Commission's regulation at 16 CFR parts 1107 and 1110. Among other requirements, each certificate must identify the manufacturer or private labeler issuing the certificate and any third-party conformity assessment body on who's testing the certificate depends, the date and place of manufacture, the date and place where the product was tested, each party's name, full mailing address, telephone number, and contact information for the individual responsible for maintaining records of test results. The certificates must be in English. The certificates must be furnished to each distributor or retailer of the product and to the CPSC, if requested.

The Commission already has an OMB control number, 3041–0159, for children's product testing and certification. The final rule amends this collection of information to add window coverings that are children's products.

Respondents and Frequency: Respondents include manufacturers and importers of custom window coverings that are children's products. Manufacturers and importers must comply with the information collection requirements when custom window coverings that are children's products are manufactured or imported.

Estimated Burden: CPSC has estimated the respondent burden in hours, and the estimated labor costs to the respondent.

Estimate of Respondent Burden: The hourly reporting burden imposed on firms that manufacture or import children's product custom window coverings includes the time and cost to maintain records related to third party testing, and to issue a CPC.

TABLE 9—ESTIMATED ANNUAL REPORTING BURDEN

Burden type	Total annual reponses	Length of response (hours)	Annual burden (hours)
Third-party recordkeeping, certification	24,850	1.0	24,850

Three types of third-party testing of children's products are required: certification testing, material change testing, and periodic testing. Requirements state that manufacturers conduct sufficient testing to ensure that they have a high degree of assurance that their children's products comply with all applicable children's product safety rules before such products are introduced into commerce. If a manufacturer conducts periodic testing, they are required to keep records that describe how the samples of periodic testing are selected.

CPSC estimates that 0.1 percent of all custom window coverings sold annually, 24,850 window coverings, are children's products and would be subject to third-party testing, for which 1.0 hours of recordkeeping and record maintenance will be required. Thus, the total hourly burden of the recordkeeping associated with certification is 24,850 hours (1.0 × 24,850).

Labor Cost of Respondent Burden. According to the U.S. Bureau of Labor Statistics (BLS), Employer Costs for Employee Compensation, the total compensation cost per hour worked for all private industry workers was $40.90 (March 2022, *https://www.bls.gov/ncs/ect/*). Based on this analysis, CPSC staff estimates that labor cost of respondent burden would impose a cost to industry of approximately $1,016,365 annually (24,850 hours × $40.90 per hour).

Cost to the Federal Government. The estimated annual cost of the information collection requirements to the Federal Government is approximately $4,254, which includes 60 staff hours to examine and evaluate the information as needed for compliance activities. This is based on a GS–12, step 5 level salaried employee. The average hourly wage rate for a mid-level salaried GS–12 employee in the Washington, DC metropolitan area (effective as of January 2022) is $48.78 (GS–12, step 5). This represents 68.8 percent of total compensation (U.S. Bureau of Labor Statistics, ''Employer Costs for Employee Compensation,'' March 2022, percentage of wages and salaries for all civilian management, professional, and related employees: *https://www.bls.gov/ncs/ect/.* Adding an additional 31.2 percent for benefits brings average annual compensation for a mid-level salaried GS–12 employee to $70.90 per hour. Assuming that approximately 60 hours will be required annually, this results in an annual cost of $4,254 ($70.90 per hour × 60 hours = $ 4,254.07).

CPSC did not receive any comments on the burden estimate provided in the NPR (87 FR 1048–49). CPSC has submitted the information collection requirements of this final rule to OMB for review in accordance with PRA requirements. 44 U.S.C. 3507(d).

IX. Preemption

Executive Order (E.O.) 12988, *Civil Justice Reform* (Feb. 5, 1996), directs agencies to specify the preemptive effect of a rule in the regulation. 61 FR 4729 (Feb. 7, 1996). The final regulation for operating cords on custom window coverings is issued under authority of the CPSA. 15 U.S.C. 2051–2089. Section 26 of the CPSA provides that whenever a consumer product safety standard under the Act is in effect and applies to a risk of injury associated with a consumer product, no State or political subdivision of a State shall have any authority either to establish or to continue in effect any provision of a safety standard or regulation which prescribes any requirements as to the performance, composition, contents, design, finish, construction, packaging or labeling of such product which are designed to deal with the same risk of injury associated with such consumer product, unless such requirements are identical to the requirements of the Federal standard. 15 U.S.C. 2075(a).

The Federal Government, or a state or local government, may establish or continue in effect a non-identical requirement for its own use that is designed to protect against the same risk of injury as the CPSC standard if the Federal, state, or local requirement provides a higher degree of protection than the CPSA requirement. *Id.* 2075(b). In addition, states or political subdivisions of a state may apply for an exemption from preemption regarding a consumer product safety standard, and the Commission may issue a rule granting the exemption if it finds that the state or local standard: (1) provides a significantly higher degree of protection from the risk of injury or illness than the CPSA standard, and (2) does not unduly burden interstate commerce. *Id.* 2075(c).

Thus, absent exemption, the final rule for operating cords on custom window coverings preempts non-identical state or local requirements for operating cords on custom window coverings designed to protect against the same risk of injury and prescribing requirements regarding the performance of operating cords on custom window coverings.

X. Testing, Certification, and Notice of Requirements

Section 14(a) of the CPSA includes requirements for certifying that children's products and non-children's products comply with applicable mandatory standards. 15 U.S.C. 2063(a). Section 14(a)(1) addresses required certifications for non-children's products, and sections 14(a)(2) and (a)(3) address certification requirements specific to children's products.

A ''children's product'' is a consumer product that is ''designed or intended primarily for children 12 years of age or younger.'' *Id.* 2052(a)(2). The following factors are relevant when determining whether a product is a children's product:

- manufacturer statements about the intended use of the product, including a label on the product if such statement is reasonable;
- whether the product is represented in its packaging, display, promotion, or advertising as appropriate for use by children 12 years of age or younger;
- whether the product is commonly recognized by consumers as being intended for use by a child 12 years of age or younger; and
- the Age Determination Guidelines issued by CPSC staff in September 2002, and any successor to such guidelines.

Id. ''For use'' by children 12 years and younger generally means that children will interact physically with the product based on reasonably foreseeable use. 16 CFR 1200.2(a)(2). Children's products may be decorated or embellished with a childish theme, be sized for children, or be marketed to appeal primarily to children. *Id.* § 1200.2(d)(1).

CPSC estimates that approximately 0.1 percent of custom window coverings are specifically designed for children, and based on the factors listed above, fall within the definition of a ''children's product.'' This final rule requires custom window coverings that are children's products to meet the third-party testing and certification requirements in section 14(a) of the CPSA. The Commission's requirements for certificates of compliance are codified at 16 CFR part 1110.

Non-Children's Products. Section 14(a)(1) of the CPSA requires every manufacturer (which includes importers)[44] of a non-children's product that is subject to a consumer product safety rule under the CPSA or a similar rule, ban, standard, or regulation under any other law enforced by the Commission to certify that the product complies with all applicable CSPSC-enforced requirements. 15 U.S.C. 2063(a)(1).

Children's Products. Section 14(a)(2) of the CPSA requires the manufacturer or private labeler of a children's product that is subject to a children's product safety rule to certify that, based on a third-party conformity assessment body's testing, the product complies with the applicable children's product safety rule. *Id.* 2063(a)(2). Section 14(a) also requires the Commission to publish a notice of requirements (NOR) for a third-party conformity assessment body (*i.e.,* testing laboratory) to obtain accreditation to assess conformity with a children's product safety rule. *Id.* 2063(a)(3)(A). Because some custom window coverings are children's products, the final rule is a children's product safety rule, as applied to those products. Accordingly, this final rule also includes a final NOR.

The Commission published a final rule, codified at 16 CFR part 1112, entitled *Requirements Pertaining to Third Party Conformity Assessment Bodies,* which established requirements and criteria concerning testing laboratories. 78 FR 15836 (Mar. 12, 2013). Part 1112 includes procedures for CPSC to accept a testing laboratory's accreditation and lists the children's product safety rules for which CPSC has published NORs. When CPSC issues a new NOR, it must amend part 1112 to include that NOR. Accordingly, as part of this final rule for operating cords on custom window coverings, the Commission also amends part 1112 to add the ''Safety Standard for Operating Cords on Custom Window Coverings'' to

[44] The CPSA defines a ''manufacturer'' as ''any person who manufactures or imports a consumer product.'' 15 U.S.C. 2052(a)(11).

the list of children's product safety rules for which CPSC has issued an NOR.

Testing laboratories that apply for CPSC acceptance to test custom window coverings that are children's products for compliance with the new rule would have to meet the requirements in part 1112. When a laboratory meets the requirements of a CPSC-accepted third party conformity assessment body, the laboratory can apply to CPSC to include 16 CFR part 1260, *Safety Standard for Operating Cords on Custom Window Coverings,* in the laboratory's scope of accreditation of CPSC safety rules listed on the CPSC website at: *www.cpsc.gov/labsearch*.

XI. Effective Date

The Administrative Procedure Act (APA) generally requires that the effective date of a rule be at least 30 days after publication of a final rule. 5 U.S.C. 553(d). Section 9(g)(1) of the CPSA states that a consumer product safety rule shall specify the date such rule is to take effect, and that the effective date must be at least 30 days after promulgation, but cannot exceed 180 days from the date a rule is promulgated, unless the Commission finds, for good cause shown, that a later effective date is in the public interest and publishes its reasons for such finding. The NPR proposed an effective date of 180 days after publication of the final rule in the **Federal Register**. The Commission received over 400 comments on the proposed effective date. Consumer organizations stated that a mandatory standard should be issued as soon as possible, and one supplier of cordless lifting systems (Safe T Shade) stated that 180-day lead time is more than sufficient for industry implementation. Other commenters, however, requested that the Commission lengthen the effective date to allow for product development, training, and marketing of new designs to meet the requirements of the final rule. Some estimated lengthy delays in obtaining equipment and materials, but failed to provide specific justifications. Even the most detailed comments were unpersuasive. For example, two international firms with large Canadian operations (Hunter Douglas and Blinds To Go) failed to address the significance of the similar Canadian standard, while another comment identified the filer inconsistently as Springs Window Furnishings, Springs Window Fashions, or Spring Window Fashions, creating doubt whether the drafters were familiar with the company's operations.

The Commission considered staff's analysis of the effective date and information supplied by commenters, but does not agree that most custom window covering manufacturers require more than 180 days after publication of the final rule to come into compliance, and does not find good cause within the public interest to extend this effective date beyond 180 days. The basis for the Commission's decision to set the effective date at the 180-day upper bound set forth in section 9(g)(1) of the CPSA, is provided in Tabs C and F of Staff's Final Rule Briefing Package, and in sections II.E.4 and III.G.6 of this preamble.

XII. Incorporation by Reference

The Commission incorporates by reference certain provisions of ANSI/WCMA A100.1—2018, American National Standard for Safety of Corded Window Covering Products. The Office of the Federal Register (OFR) has regulations concerning incorporation by reference. 1 CFR part 51. The OFR revised these regulations to require that, for a final rule, agencies must discuss in the preamble the ways that the materials the agency incorporates by reference are reasonably available to interested persons, or how the agency worked to make the materials reasonably available. In addition, the preamble of the final rule must summarize the material. 1 CFR 51.5(a).

Sections I.B.2(d), II, IV, and Tables 3 and 7 of this preamble summarize of the requirements in ANSI/WCMA A100.1—2018, which is incorporated by reference. ANSI/WCMA A100.1—2018 is copyrighted. The public may view a read-only copy of ANSI/WCMA A100.1—2018 free of charge at: *https://wcmanet.com/wp-content/uploads/2021/07/WCMA-A100-2018_v2_websitePDF.pdf.* Alternatively, interested parties may inspect a copy of the standard free of charge by contacting Alberta E. Mills, Office of the Secretary, U.S. Consumer Product Safety Commission, 4330 East West Highway, Bethesda, MD 20814; telephone: 301–504–7479; email: *cpsc-os@cpsc.gov.* To download or print the standard, interested persons may purchase a copy of ANSI/WCMA A100.1—2018 from WCMA, through its website (*https://wcmanet.com*), or contacting the Window Covering Manufacturers Association, Inc., 355 Lexington Avenue, New York, New York 10017; telephone: 212.297.2122.

XIII. Commission Findings

The CPSA requires the Commission to make certain findings when issuing a consumer product safety standard. These findings are contained in the regulatory text.

XIV. Congressional Review Act

The Congressional Review Act (CRA; 5 U.S.C. 801–808) states that, before a rule may take effect, the agency issuing the rule must submit the rule, and certain related information, to each House of Congress and the Comptroller General. 5 U.S.C. 801(a)(1). The submission must indicate whether the rule is a ''major rule.'' The CRA states that the Office of Information and Regulatory Affairs (''OIRA'') determines whether a rule qualifies as a ''major rule.'' Pursuant to the CRA, OIRA designated this rule as a ''major rule,'' as defined in 5 U.S.C. 804(2). To comply with the CRA, CPSC will submit the required information to each House of Congress and the Comptroller General.

List of Subjects

16 CFR Part 1112

Administrative practice and procedure, Audit, Consumer protection, Reporting and recordkeeping requirements, Third-party conformity assessment body.

16 CFR Part 1260

Administrative practice and procedure, Consumer protection, Cords, Imports, Incorporation by reference, Infants and children, Window coverings.

For the reasons discussed in the preamble, the Commission amends chapter II, subchapter B, of title 16 of the Code of Federal Regulations as follows:

PART 1112—REQUIREMENTS PERTAINING TO THIRD PARTY CONFORMITY ASSESSMENT BODIES

■ 1. The authority citation for part 1112 continues to read as follows:

Authority: Pub. L. 110–314, section 3, 122 Stat. 3016, 3017 (2008); 15 U.S.C. 2063.

■ 2. Amend § 1112.15 by adding paragraph (b)(53) to read as follows:

§ 1112.15 When can a third party conformity assessment body apply for CPSC acceptance for a particular CPSC rule or test method?

* * * * *

(b) * * *

(53) 16 CFR part 1260, Safety Standard for Operating Cords on Custom Window Coverings.

* * * * *

■ 3. Add part 1260 to read as follows:

PART 1260—SAFETY STANDARD FOR OPERATING CORDS ON CUSTOM WINDOW COVERINGS

Sec.

1260.1 Scope and definitions.
1260.2 Requirements.
1260.3 Prohibited stockpiling.
1260.4 Findings.
1260.5 Standards incorporated by reference.
1260.6 Severability.

Authority: 15 U.S.C. 2056, 15 U.S.C. 2058, and 5 U.S.C. 553.

§ 1260.1 Scope and definitions.

(a) This part establishes a consumer product safety standard for operating cords on custom window coverings. The effective date of this part is May 30, 2023.

(b) The consumer product safety standard in this part relies on the following definitions in section 3 of ANSI/WCMA A100.1—2018 (incorporated by reference, see § 1260.5):

(1) *Custom window covering* (custom blinds, shades, and shadings) has the same meaning as defined in section 3, definition 5.01, of ANSI/WCMA A100.1—2018, as any window covering that is not classified as a stock window covering.

(2) *Stock window covering* (stock blinds, shades, and shadings) has the same meaning as defined in section 3, definition 5.02, of ANSI/WCMA A100.1—2018, as a window covering that is completely or substantially fabricated prior to being distributed in commerce and is a specific stock-keeping unit (SKU). Even when the seller, manufacturer, or distributor modifies a pre-assembled product by adjusting to size, attaching the top rail or bottom rail, or tying cords to secure the bottom rail, the product is still considered stock. Online sales of the product or the size of the order such as multi-family housing do not make the product a non-stock product. These examples are provided in ANSI/WCMA A100.1—2018 to clarify that as long as the product is ''substantially fabricated'' prior to distribution in commerce, subsequent changes to the product do not change its categorization.

(3) *Operating cord* has the same meaning as defined in section 3, definition 2.19, of ANSI/WCMA A100.1—2018, as the portion of the cord that the user manipulates directly during operation (including lifting, lowering, tilting, rotating, and traversing).

(4) *Cord shroud* has the same meaning as defined in section 3, definition 2.09, of ANSI/WCMA A100.1—2018, as a device or material added to limit the accessibility of a cord or formation of a hazardous loop.

(5) *Cord retraction device* has the same meaning as defined in section 3, definition 2.08, of ANSI/WCMA A100.1—2018, as a passive device which winds and gathers cords when tension is no longer applied by the user.

(6) *Rigid cord shroud* is a cord shroud that is constructed of inflexible material, rendering the cord inaccessible as defined in Appendix C of ANSI/WCMA A100.1—2018, to prevent a child from accessing a window covering cord.

(7) *Retractable cord* is a cord that extends when pulled by a user, and fully retracts when the user releases the cord, rendering the cord inaccessible as defined in Appendix C of ANSI/WCMA A100.1—2018.

(8) *Loop cord and bead chain restraining device* is a device, integrated to and installed on the window covering, that prevents the creation of hazardous loop from an accessible continuous operating cord.

(9) *Operating interface* is the part of the window covering that the user physically touches or grasps by hand or a tool to operate the window covering, for example a wand to tilt the slats of the product or the bottom rail to raise or lower the product.

§ 1260.2 Requirements.

(a) *Requirements for operating cords.* Each custom window covering shall comply with section 4.3.1 or 4.3.2.5.2, instead of section 4.3.2, of ANSI/WCMA A100.1—2018 (incorporated by reference, see § 1260.5).

(b) *Requirements for rigid cord shrouds.* If a custom window covering complies with paragraph (a) of this section by using a rigid cord shroud to make an operating cord inaccessible, the rigid cord shroud shall meet the requirements in section 6.3, of ANSI/WCMA A100.1—2018 and shall not have an accessible cord when tested for cord accessibility using the test methods defined in paragraphs (b)(1) and (2) of this section.

(1) *Test methods for rigid cord shrouds: Center load test.* (i) Support each end of the rigid cord shroud, but do not restrict the rotation along the axial direction. Supports must be within 0.25 inches from the ends of the shroud as shown in figure 1 to this paragraph (b)(1)(i).

Figure 1 to Paragraph (b)(1)(i)—Rigid Cord Shroud Test Set-Up

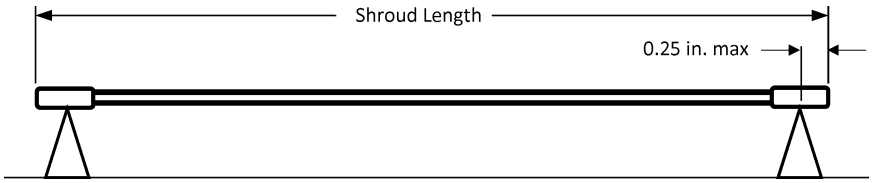

(ii) Apply a 5-pound force at the center of the rigid cord shroud for at least 5 seconds as shown in figure 2 to this paragraph (b)(1)(ii).

Figure 2 to Paragraph (b)(1)(ii)—Rigid Cord Shroud Center Load Test and Deflection Measurement

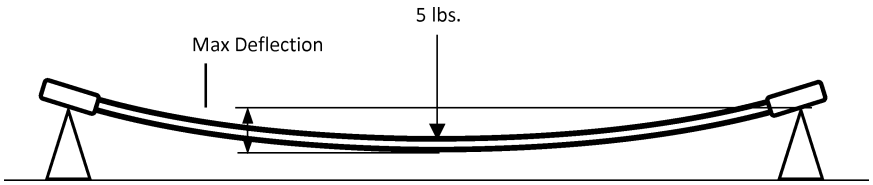

(iii) Measure the maximum deflection of the shroud, while the 5-pound force is applied.

(iv) For rigid cord shrouds that are ≤19 inches, the deflection shall not exceed 1 inch. For every additional 19 inches in shroud length, the shroud can deflect an additional inch. See figure 2 to paragraph (b)(1)(ii) of this section.

(v) While continuing to apply the 5-pound force, determine if the cord(s) can be contacted by the cord shroud accessibility test probe shown in figure 3 to this paragraph (b)(1)(v). If the cord shroud accessibility test probe can touch any cord, the cord(s) are considered accessible.

Figure 3 to Paragraph (b)(1)(v)—Cord Shroud Accessibility Test Probe

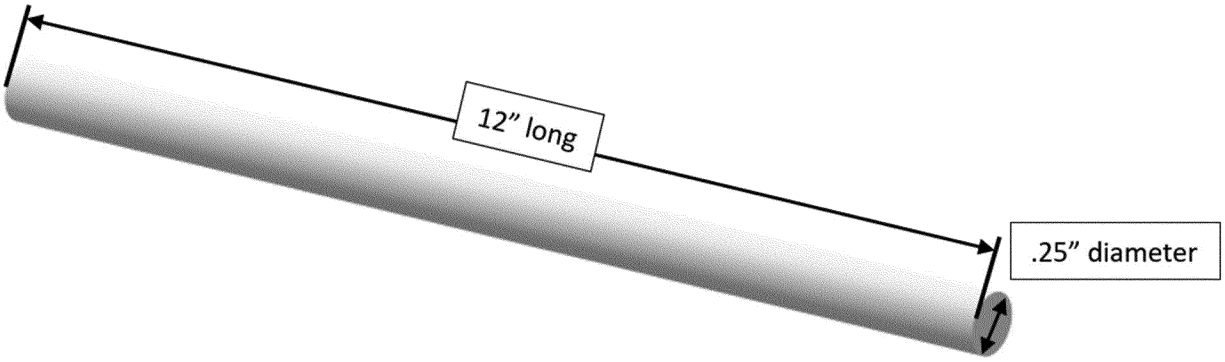

(2) *Test methods for rigid cord shrouds: Axial torque test.* (i) Mount one end of the rigid cord shroud and restrict the rotation along the axial direction.

(ii) Apply a 4.4 in-lb. (0.5Nm) torque along the other end of the rigid cord shroud for 5 seconds.

(iii) While continuing to apply the torque, determine if the cord(s) can be contacted by the cord shroud accessibility test probe shown in figure 3 to paragraph (b)(1)(v) of this section. If the cord shroud accessibility test probe can touch any cord, the cord(s) are considered accessible.

(c) *Requirements for cord retraction devices.* If a custom window covering complies with paragraph (a) of this section using a cord retraction device, the cord retraction device shall meet the requirements in paragraphs (c)(1) through (4) of this section.

(1) When a 30 grams mass is applied to the operating interface, the cord retraction device shall maintain full retraction of the retractable cord such that the retractable cord is not accessible per Appendix C of ANSI/WCMA A100.1—2018.

(2) The maximum stroke length for a cord retraction device is 12 inches measured from the bottom of the headrail.

(3) The operating interface for cord retraction devices may not be a cord of any length including a short static or access cord. It may be a ring and pole, a wand or any other design that cannot bend on itself, eliminating the potential of creating a hazardous loop.

(4) The cord retraction device shall have a service life of at least 5,000 cycles after exposed portions or components have been subjected to 500 hours of ultraviolet (UV) exposure per American Association of Textile Chemists and Colorists (AATCC) Test Method 16–2004, Option 3 of ANSI/WCMA A100.1—2018.

(d) *Requirements for loop cord and bead chain restraining devices.* If a custom window covering complies with paragraph (a) of this section using a loop cord and bead chain restraining device, the loop cord and bead chain restraining device shall meet the requirements in section 6.5, of ANSI/WCMA A100.1—2018 with an additional test as defined in paragraph (d)(l) of this section, and shall not form a hazardous loop when tested for a hazardous loop using the test methods defined in paragraphs (d)(2) and (3) of this section.

(1) *Test methods for loop cord and bead chain restraining device: UV stability and operational cycle test.* One sample loop cord and bead chain restraining device shall be tested to section 6.5.2.2, UV Stability, of ANSI/WCMA A100.1—2018, followed by section 6.5.2.1, Operational Cycle Test, of ANSI/WCMA A100.1—2018.

(2) *Test methods for loop cord and bead chain restraining device: Center load test.* (i) Support each end of the loop cord and bead chain restraining device, but do not restrict the rotation along the axial direction. Supports must be within 0.25 inches from the ends of the shroud as shown in figure 4 to this paragraph (d)(2)(i).

Figure 4 to Paragraph (d)(2)(i)—Cord and Bead Chain Restraining Device Test Set-Up

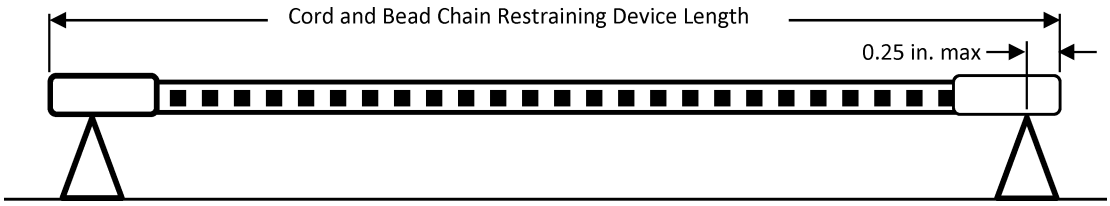

(ii) Apply a 5-pound force at the center of the cord and bead chain restraining device for at least 5 seconds as shown in figure 5 to this paragraph (d)(2)(ii).

Figure 5 to Paragraph (d)(2)(ii)—Loop Cord and Bead Chain Restraining Device Center Load Test and Deflection Measurement

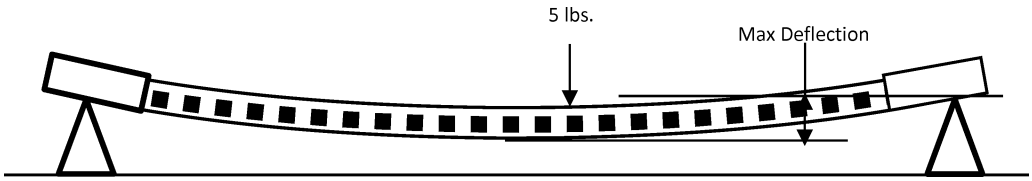

(iii) Measure the maximum deflection of the cord and bead chain restraining device, while the 5-pound force is applied.

(iv) For cord and bead chain restraining device that are ≤19 inches, the deflection shall not exceed 1 inch. For every additional 19 inches in shroud length, the shroud can deflect an additional inch. See figure 5 to paragraph (d)(2)(ii) of this section.

(v) While continuing to apply the 5-pound force, determine if the cord(s) create an opening between the cord and the restraining device. If the hazardous loop head probe (Figure D1 of ANSI/WCMA A1001–2018) can pass through the opening, the opening is considered a hazardous loop.

(3) *Test methods for cord and bead chain restraining devices: Axial torque test.* (i) Mount one end of the cord and bead chain restraining device and restrict the rotation along the axial direction.

(ii) Apply a 4.4 in-lb. (0.5 Nm) torque along the other end of the cord and bead chain restraining device for 5 seconds. While continuing to apply the torque, determine if the cord(s) if the cord(s) create an opening between the cord and the restraining device. If the hazardous loop head probe (Figure D1 of ANSI/WCMA A1001—2018) can pass through the opening, the opening is considered a hazardous loop.

§ 1260.3 Prohibited stockpiling.

(a) *Prohibited acts.* Manufacturers and importers of custom window coverings shall not manufacture or import custom window coverings that do not comply with the requirements of this part in any 180-day period between November 28, 2022, and May 30, 2023, at a rate that is greater than 120 percent of the rate at which they manufactured or imported custom window coverings during the base period for the manufacturer.

(b) *Base period.* The base period for custom window coverings is any period of 180 consecutive dates, chosen by the manufacturer or importer, in the 5-year period immediately preceding November 28, 2022.

§ 1260.4 Findings.

(a) *General.* Section 9(f) of the Consumer Product Safety Act (15 U.S.C. 2058(f)) requires the Commission to make findings concerning the following topics and to include the findings in the rule.

Note 1 to paragraph (a): Because the findings are required to be published in the rule, they reflect the information that was available to the Consumer Product Safety Commission (Commission, CPSC) when the standard was issued on November 28, 2022.

(b) *Degree and nature of the risk of injury.* (1) Operating cords on custom window coverings present an unreasonable risk of strangulation, including death and serious injury, to children 8 years old and younger. If children can access a window covering cord that is longer than 8 inches, children can wrap the cord around their neck, or insert their head into a loop formed by the cord and strangle. Strangulation can lead to serious injuries with permanent debilitating outcomes or death.

(2) Strangulation deaths and injuries on window covering cords are a ''hidden hazard'' because consumers do not understand or appreciate the hazard, or how quickly and silently strangulation occurs. Because young children may be left unsupervised for a few minutes or more in a room that is considered safe, such as a bedroom or family room, adult supervision is unlikely to eliminate or reduce the hazard. Children can wrap the cord around their neck, insert their head into a cord loop and get injured or die silently in a few minutes in any room, with or without supervision.

(3) Safety devices such as cord cleats and tension devices are unlikely to be effective to eliminate or substantially reduce the hazard. Cord cleats, for example, need to be attached on the wall and caregivers must wrap the cord around the cleat each and every time the window covering is raised or lowered. As incident data show, children can still access and become entangled in cords by climbing on furniture. Tension devices also need to be attached on the wall or windowsill, which may not occur (and may not be permitted in rental homes); even if properly installed, depending on how taut the cord loop is, it can still allow a child's head to enter the opening as observed in the incident data.

(4) A user research study found a lack of awareness on cord entanglement among caregivers; lack of awareness of the speed and mechanism of the injury; difficulty using and installing safety devices as primary reasons for not using them; and inability to recognize the purpose of the safety devices provided with window coverings. Warning labels are not likely to be effective because consumers are less likely to look for and read safety information about the products that they use frequently and are familiar with. Many of the children at risk of strangulation, those 8 years old and younger, cannot read or appreciate warning labels. Most of the window covering units involved in strangulation incidents had the permanent warning label on the product. Even well-designed warning labels will have limited effectiveness in communicating the hazard on this type of product.

(5) Every custom product sold with an accessible operating cord presents a hidden hazard to young children and can remain a hazard in the household for one to two decades or longer. Some consumers may believe that because they do not currently have young children living with them or visiting them, accessible operating cords on window coverings are not a safety hazard. However, window coverings last a long time, family circumstances change, and when homes are sold or new renters move in, the existing window coverings, if they are functional, usually remain installed and could be hazardous to new occupants with young children.

(6) Window coverings that comply with the operating cord requirements for stock window covering requirements in section 4.3.1 of ANSI/WCMA A100.1—2018 (incorporated by reference, see § 1260.5) adequately address the strangulation hazard, by not allowing hazardous cords on the product by design, and therefore do not rely on consumer action. CPSC finds that all of the operating cord incidents it identified as involving custom window coverings likely would have been prevented if the requirements in section 4.3.1 of ANSI/WCMA A100.1—2018 were in effect and covered the incident products.

(7) CPSC databases contain incident data showing a total of 209 reported fatal and nonfatal strangulations on window coverings among children eight years and younger, from January 2009

through December 2021. Nearly 48 percent of the reported incidents were fatal (100 of 209). Sixteen of the surviving victims required hospitalization, and six survived a hypoxic-ischemic episode or were pulseless and in full cardiac arrest when found, suffered severe neurological sequalae ranging from loss of memory to a long-term or permanent vegetative state requiring tracheotomy and gastrointestinal tube feeding. One victim remained hospitalized for 72 days, was released with 75 percent permanent brain damage, and is confined to a bed.

(8) Based on CPSC's Injury Cost Model, approximately 7.6 medically treated nonfatal injuries to children 8 years and younger occurred annually in the United States from 2009 through 2021. Based on National Center for Health Statistics (NCHS) data and a separate study of child strangulations, a minimum of approximately 6.8 fatal strangulations related to window covering operating cords (excluding inner cords and lifting loops) occurred per year in the United States among children under eight years old from 2009–2020.

(c) *Number of consumer products subject to the rule.* Approximately 145 million corded custom window coverings were in use in the United States in 2020. About 25 million custom window coverings were shipped in the U.S. in 2020, and about 15.9 million of these were corded custom window coverings.

(d) *The public need for custom window coverings and the effects of the rule on their utility, cost, and availability.* (1) Consumers commonly use window coverings in their homes to control light coming in through windows, for privacy, and for decoration. The window covering market is divided into stock and custom products. The final rule addresses hazards associated with custom window coverings, which present the same risk of strangulation as stock window coverings, but custom window coverings allow consumers to choose from a wider variety of materials, colors, operating systems, or sizes, than stock products.

(2) The Commission does not expect the final rule to have a substantial effect on the utility or availability of custom window coverings, and the impact on cost depends on the product type. The Commission considered whether some consumers, such as the elderly and disabled, or those with windows in hard-to-reach locations, would experience a loss of utility from the removal of accessible operating cords from custom window coverings. The final rule mitigates any potential loss in utility by including several methods to make operating cords safer while still providing ease of use, including rigid cord shrouds, retractable cords, and loop cord and bead restraining devices, to assist consumers to raise and lower custom window coverings. Additionally, consumers can choose to use a remote-controlled operating system, or other tools, such as a pole, to operate the window covering.

(3) Retail prices of custom window coverings vary substantially. The least expensive units for an average size window retail for less than $40, while some more expensive units may retail for several thousand dollars. Custom window covering prices may increase to reflect the added cost of modifying or redesigning products to comply with the final rule. If the costs associated with redesigning or modifying a custom window covering to comply with the standard results in the manufacturer discontinuing that model, there would be some loss in availability of that type.

(4) Although prices of stock window coverings have increased since ANSI/WCMA A100.1—2018 went into effect in 2018, sales of stock products remain consistent. For custom products, which have higher prices on average, consumers very well may be willing to pay more for a safer window covering without affecting sales, similar to stock window coverings. The regulatory analysis in the final rule states that the estimated net cost increase per household to replace all custom window products in a home to be as low as $24 for less expensive products, representing only a 5% increase in cost. Such cost increase is nominal to prevent the hidden strangulation hazard to children on window coverings for the 10 years custom window coverings are likely to be used.

(e) *Other means to achieve the objective of the rule, while minimizing adverse effects on competition and manufacturing.* (1) The Commission considered alternatives to achieving the rule's objective of reducing the unreasonable risks to children of injury and death associated with operating cords on custom window coverings. For example, the Commission considered relying on compliance with the voluntary standard and education campaigns rather than issuing a mandatory rule for operating cords on custom window coverings. This is the approach CPSC has relied on to date, and it would have minimal costs; however, it is unlikely to further reduce the risk of injury from operating cords on custom window coverings.

(2) Similarly, the Commission considered narrowing the scope of the rule to address only the hazards associated with operating cords on custom vertical blinds, curtains, and drapes, because cords are not critical to the operation of these products. Narrowing the rule to these three product types would lessen the cost impact and make it unlikely that any particular product type and/or size would be eliminated, and costs would be near $0 because using plastic rods for operation is very similar to cords in cost. However, only 3 of the 36 custom product incidents (all are fatalities) were associated with vertical blinds, and there were no curtain or drape incidents where the stock/custom classification could be determined. This option would not result in an effective reduction in injuries and deaths.

(3) Other alternatives the Commission considered include: adopting the Canadian standard for window covering cords, which would increase the costs to comply with the rule with no additional benefits, and adopting a draft revised version of the voluntary standard, which the Commission staff has determined is inadequate to address the risk of injury because the revised standard would still allow accessible cords to remain available for sale to consumers.

(4) The Commission also considered setting a later effective date. Based on the record before the Commission, including the severity of the strangulation hazard to children, the advanced state of compliance with similar requirements for stock window coverings in the United States and for stock and custom window coverings in Canada, and the long pendency of this proceeding, the final rule provides an effective date that is 180 days after publication of the final rule, as proposed.

(f) *Unreasonable risk.* (1) Based on CPSC's Injury Cost Model, about 185 medically treated nonfatal injuries are predicted to have occurred annually from 2009 through 2020, involving children eight years and younger. Based on a review of National Center for Health Statistics (NCHS data) and a separate study of child strangulations, a minimum of 8.1 fatal strangulations related to window covering cords occurred per year in the United States among children under five years old from 2009–2020. Based on reviews of CPSC databases, we found reports of a total of 209 reported fatal and nonfatal strangulations on window coverings among children eight years and younger, from January 2009 through December 2021. Nearly 48 percent were

fatal incident reports (100 of 209), while the remaining were near-miss nonfatal incidents.

(2) The Commission estimates that the rule would result in aggregate benefits of about $31.6 million annually due to a reduction in deaths and injuries caused by custom window coverings. Of the potential modifications for which staff was able to estimate the potential cost, the lowest costs were about $2.18 per unit, although costs for some units are likely $0. Effective performance requirements for operating cords on window coverings are well known and already utilized for lower-priced stock window coverings. Technologies to address hazardous window covering cords are also known and utilized on stock products.

(3) The determination of whether a consumer product safety rule is reasonably necessary to reduce an unreasonable risk of injury involves balancing the degree and nature of the risk of injury addressed by the rule against the probable effect of the rule on the utility, cost, or availability of the product. The Commission does not expect the final rule to have a substantial effect on the utility or availability of custom window coverings. The rule may impact the cost of custom window coverings, but consumers already pay more for custom window coverings, and are likely willing to pay more for safer products.

(4) ANSI/WCMA–2018 eliminated the strangulation hazard on stock window coverings, which did not negatively impact sales of stock products; sales increased and cordless technologies became well-developed. The final rule will extend the requirements for stock products to custom window coverings. The Commission expects that the custom window covering market will absorb this cost, just as seen in the stock window covering market. This fact is also observed in the Canadian window covering market after Canada implemented a rule that eliminates hazardous cords on all window covering products. Staff identified no evidence from the Canadian market of a significant reduction in consumer choice as a result of their rule. Rather, the Canadian market has reacted with cost-effective substitutes and redesigned products.

(5) Weighing the possibility of increased costs for custom window coverings with the continuing deaths and injuries to young children, the Commission concludes that custom window coverings with hazardous operating cords pose an unreasonable risk of injury and death and finds that the final rule is reasonably necessary to reduce that unreasonable risk of injury and death.

(6) The Commission also finds that an effective date of 180 days after publication is reasonably necessary to address the unreasonable risk of strangulation from operating cords on custom window coverings. Section 9(g)(1) of the CPSA (15 U.S.C. 2058(g)(1)) sets a presumptive maximum effective date of 180 days after publication of the rule. To extend this period, the Commission must find good cause that doing so is within the public interest. When balancing the risk of severe harm and death to young children over the entire service life of noncompliant window coverings, against the possibility that some styles of custom window coverings may be less available during a transition period and stock products or other custom styles might need to be used instead, the Commission finds that the public interest is better served by protecting the safety of children and families.

(g) *Public interest.* The final rule is intended to address an unreasonable risk of injury and death posed by hazardous operating cords on custom window coverings. Adherence to the requirements of the final rule will significantly reduce or eliminate a hidden hazard, strangulation deaths and injuries to children 8 years old and younger, without major disruption to industry or consumers; thus, the Commission finds that promulgation of the rule is in the public interest.

(h) *Voluntary standards.* The Commission is aware of one national voluntary standard, ANSI/WCMA A100.1—2018, as well as European, Australian, and Canadian standards. Among these, the Commission considers the Canadian standard to be the most stringent because it applies to all window coverings. ANSI/WCMA A100.1—2018 contains adequate performance requirements to address the risk of strangulation on inner cords for both stock and custom window coverings and contains adequate requirements to address the risk of injury on operating cords for stock products. The Commission also finds that custom window coverings substantially comply with the voluntary standard. However, the Commission finds that operating cord requirements for custom window coverings in ANSI/WCMA A100.1—2018 are inadequate to address the risk of injury, because the voluntary standard allows accessible and hazardous operating cords to be present on custom products. Thus, the Commission finds that compliance with an existing voluntary standard is not likely to result in the elimination or adequate reduction of the risk of injury presented by custom window coverings.

(i) *Relationship of benefits to costs.* (1) The aggregate benefits of the rule are conservatively estimated to be about $23 million annually with the base value of statistical life (VSL); and the lowest cost of the rule is estimated to be about $54.4 million annually. Recent studies suggest that the VSL for children could be higher than that for adults. In other words, consumers might be willing to pay more to reduce the risk of premature death of children than to reduce the risk of premature death of adults. A review of the literature conducted for the CPSC suggested that the VSL for children could exceed that of adults by a factor of 1.2 to 3, with a midpoint of around 2 (Industrial Economics, Incorporated (IEc), 2018). ''Memorandum to CPSC: Valuing Reductions in Fatal Risks to Children.'' Cambridge, MA (available at: *https://www.cpsc.gov/s3fs-public/VSL_Children_Report_FINAL_20180103.pdf*). The Commission received positive comment on increasing the VSL for children by a factor of 3. Staff provided a sensitivity analysis for the final rule demonstrating how the ratio of costs and benefits change based on several variables, including a higher VSL for children. When staff increased the VSL by a factor of 3 for children (value of $31.5 million), the benefits of the rule exceed costs by approximately $14.3 million.

(2) Staff's benefits and costs analysis also highlights unquantified benefits regarding the emotional distress of caregivers that could also be reduced by the final rule. This benefit is not directly accounted for in the primary VSL estimate of $10.5 million. The value of the shock or perceived guilt related to a caregiver's inattentiveness could be significant, as it could result in large reductions to physical wellbeing or income loss.

(3) To determine how the final rule impacts consumers, staff converted costs and benefits of the rule into a calculated net cost per household, based on the data point that the average detached, single-family household has 12 window coverings. This analysis translates into a net cost of the final rule of $1.97 for metal or vinyl horizontal blinds. Using the assumption of 12 window coverings per household, this equates to a net cost of the rule (above the benefits provided) of $23.67 per household every time a household updates their custom window coverings, about once every 10 years. For metal or vinyl horizontal blinds, $23.67 is slightly more than 5 percent of the total cost of $448.32 that a household would

spend to update their window coverings.

(4) We note that economies of scale associated with the voluntary standard for stock product operating cords, and the Canadian standard, may have reduced costs associated with cordless components since Commission staff developed the bases for their cost estimates as early as 2016. Additionally, custom window coverings have a longer product life, which increases the benefit of improving safety beyond the levels Commission staff determined for both stock and customer window coverings.

(5) Based on this analysis, the Commission finds that the benefits expected from the rule bear a reasonable relationship to the anticipated costs of the rule.

(j) *Least burdensome requirement that would adequately reduce the risk of injury.* (1) The Commission considered less-burdensome alternatives to the final rule, detailed in paragraph (e) of this section, but finds that none of these alternatives would adequately reduce the risk of injury.

(2) The Commission considered relying on voluntary recalls, compliance with the voluntary standard, and education campaigns, rather than issuing a mandatory standard. These alternatives would have minimal costs but would be unlikely to reduce the risk of injury from custom window coverings that contain hazardous cords.

(3) The Commission considered issuing a standard that applies only to certain types of window coverings such as vertical blinds. This would impose lower costs on manufacturers but is unlikely to adequately reduce the risk of injury because it would only address incidents associated with those types. Based on the custom product incident data, only 8.3 percent of the incidents involved vertical blinds and 22.2 percent involved faux wood/wood blinds. The Commission considered adopting the Canadian standard for window covering cords, which would increase the costs to comply with the rule with no additional benefits and/or providing a longer effective date. And the Commission considered adopting a 2022 draft revision of the voluntary standard but finds the requirements in the standard inadequate to address the risk of injury.

§ 1260.5 Standards incorporated by reference.

(a) Certain material is incorporated by reference into this part with the approval of the Director of the Federal Register under 5 U.S.C. 552(a) and 1 CFR part 51. All approved material is available for inspection at the U.S. Consumer Product Safety Commission (CPSC) and at the National Archives and Records Administration (NARA). Contact CPSC at: Office of the Secretary, U.S. Consumer Product Safety Commission, 4330 East West Highway, Bethesda, MD 20814, telephone (301) 504–7479, email: *cpsc-os@cpsc.gov.* For information on the availability of this material at NARA, email *fr.inspection@nara.gov,* or go to: *www.archives.gov/federal-register/cfr/ibr-locations.html.* The material may be obtained from the source(s) listed in the following paragraphs of this section.

(b) Window Covering Manufacturers Association, Inc., 355 Lexington Avenue, New York, New York 10017, telephone: 212.297.2122, *https://wcmanet.com.*

(1) ANSI/WCMA A100.1—2018, American National Standard for Safety of Corded Window Covering Products, approved January 8, 2018; IBR approved for §§ 1260.1, 1260.2, and 1260.4.

(i) *Read-only copy. https://www.wcmanet.com/pdf/WCMA-A100.1-2018_view-only_v2.pdf.*

(ii) *Purchase. https://webstore.ansi.org/Standards/WCMA/ANSIWCMAA1002018.*

(2) [Reserved]

§ 1260.6 Severability.

The provisions of this part are separate and severable from one another. If any provision is stayed or determined to be invalid, it is the Commission's intention that the remaining provisions shall continue in effect.

Alberta E. Mills,

Secretary, Consumer Product Safety Commission.

[FR Doc. 2022–25041 Filed 11–25–22; 8:45 am]

BILLING CODE 6355–01–P