CONSUMER PRODUCT SAFETY COMMISSION

16 CFR Parts 1112 and 1262

[Docket No. CPSC–2021–0037]

Safety Standard for Magnets

AGENCY: Consumer Product Safety Commission.

ACTION: Final rule.

SUMMARY: The U.S. Consumer Product Safety Commission (Commission or CPSC) is issuing a rule to address the hazard associated with ingestion of one or more high-powered magnets. The CPSC has determined that unreasonable risks of injury are associated with small, powerful magnets that, when ingested, can interact internally through body tissue, which can lead to acute and long-term health consequences or death. The rule establishes requirements for subject magnet products that are designed, marketed, or intended to be used for entertainment, jewelry (including children's jewelry), mental stimulation, stress relief, or a combination of these purposes, and that contain one or more loose or separable magnets, but the subject products do not include magnet products sold and/or distributed solely to school educators, researchers, professionals, and/or commercial or industrial users exclusively for educational, research, professional, commercial, and/or industrial purposes. Each loose or separable magnet in a product that is subject to the rule and that fits entirely within CPSC's small parts cylinder must have a flux index of less than 50 kG^2 mm^2. The flux index is determined by the method described in the ASTM F963 Toy Standard. The rule exempts from its requirements toys subject to the ASTM F963 Toy Standard. The Commission takes this action under the Consumer Product Safety Act (CPSA).

DATES:

Effective date for magnet rule: This rule is effective on October 21, 2022 and will apply to all subject magnet products manufactured after that date. The incorporation by reference of the publication listed in this rule is approved by the Director of the Federal Register as of October 21, 2022.

Effective date for Notice of Requirements: The Notice of Requirements for this rule is effective on December 20, 2022 and will apply to subject magnet products that are children's products required to be tested by CPSC-accepted third party conformity assessment bodies.

FOR FURTHER INFORMATION CONTACT: Michelle Guice, Compliance Officer, U.S. Consumer Product Safety Commission, 4330 East West Highway, Bethesda, MD 20814; telephone (301) 504–7723; email: *MGuice@cpsc.gov.*

SUPPLEMENTARY INFORMATION:

I. Background

A. CPSC's Prior Work on the Magnet Ingestion Hazard

In 2012, the Commission initiated rulemaking to address the magnet ingestion hazard for products. The rule focused on magnet sets (which are among the subject magnet products addressed in this rule) that were involved in internal interaction injuries in children and teens. 77 FR 53781 (Sep. 4, 2012) (notice of proposed rulemaking); 79 FR 59962 (Oct. 3, 2014) (2014 magnet sets rule). The rule defined ''magnet sets'' as ''any aggregation of separable magnetic objects that is a consumer product intended, marketed or commonly used as a manipulative or construction item for entertainment, such as puzzle working, sculpture building, mental stimulation, or stress relief.'' The rule required each magnet in a magnet set, and each individual magnetic object intended or marketed for use with or as a magnet set, that fit completely within CPSC's small parts cylinder, to have a flux index of 50 kG^2 mm^2 or less, consistent with the magnet size and strength limits specified in ASTM F963–11, which was in effect when the 2014 magnet sets rule was issued. Subsequently, ASTM F963–17 revised the definition of ''hazardous magnet'' to have a flux index of 50 kG^2 mm^2 or more. The final rule was published in October 2014, and it took effect on April 1, 2015.

On November 22, 2016, the U.S. Court of Appeals for the Tenth Circuit overturned CPSC's 2014 magnet sets rule, vacating and remanding it to the Commission. *Zen Magnets, LLC* v. *Consumer Prod. Safety Comm'n.,* 841 F.3d 1141 (10th Cir. 2016).[1]

On June 30, 2020, staff provided the Commission with an informational briefing package discussing the magnet ingestion hazard.[2] Staff recommended that CPSC continue to consider performance requirements for magnets, to address the ingestion hazard to children and teens.

Throughout this period, CPSC's Office of Compliance and Field Operations investigated and recalled numerous magnet products due to the magnet internal interaction hazard. CPSC has conducted 20 recalls involving hazardous magnets, including two recalls, both involving magnet sets, since preparation of the NPR. Of the 20 recalls, six involved toys subject to ASTM F963 and four involved products that would not be subject to the draft final rule (*e.g.,* a helmet with a magnetic strap). There were substantially fewer recalls of children's toys for violations of the magnet requirements specified in ASTM F963 after 2010 than before that time, reflecting that ASTM F963 has been effective in addressing the magnet internal interaction hazard for children's toys. The Commission previously incorporated by reference ASTM F963–17, as codified in 16 CFR part 1250, (referred to also as ASTM F963 Toy Standard) (82 FR 57119) (Dec. 4, 2017).

B. Notice of Proposed Rulemaking

In the **Federal Register** of January 10, 2022 (87 FR 1260), the Commission issued a notice of proposed rulemaking (NPR) under sections 7 and 9 of the Consumer Product Safety Act (CPSA; 15 U.S.C. 2051–2089), to address the unreasonable risk of injury and death associated with ingestion of loose or separable high-powered magnets.[3] As described in the NPR, the incident data showed that hazardous magnets continue to be ingested, in particular, by children and teens. When ingested, these powerful magnets can, among other risks, interact through body tissue with one another, or with a ferromagnetic object (*i.e.,* material attracted to magnets), leading to acute and long-term adverse health consequences or death.

The NPR proposed that each loose or separable magnet in a subject magnet product that fits entirely within a small parts cylinder, as provided in 16 CFR 1501.4, must have a flux index of less than 50 kG^2 mm^2. The NPR proposed the test procedure for determining the flux index in accordance with the test procedure in section 8.25.1 through 8.25.3 of the ASTM F963 Toy Standard.

The NPR proposed to exempt from the proposed rule, toys that are subject to the ASTM F963 Toy Standard, because that standard already includes requirements to adequately address the magnet ingestion hazard. Specifically,

[1] In accordance with the court's decision, the Commission removed the mandatory standard for magnets sets (16 CFR part 1240) from the Code of Federal Regulations on March 7, 2017. 82 FR 12716 (Mar. 7, 2017).

[2] The informational briefing package is available at: *www.cpsc.gov/s3fspublic/Informational%20Briefing%20Package%20Regarding%20Magnet%20Sets.pdf.*

[3] Staff's NPR briefing package is available at: *www.cpsc.gov/s3fs-public/2022-08-17-Final-Rule-Safety-Standards-for-Magnets.pdf?VersionId=QPs8iPwg0w0m5b4qsOF3Ebo.zOXY2cUN.*

ASTM F963–17 applies to ''toys,'' which are defined as objects ''designed, manufactured, or marketed as a plaything for children under 14 years of age.''

The final rule includes the toy exemption and modifies the NPR's proposal to clarify that the definition of ''subject magnet product'' means a consumer product that is designed, marketed, or intended to be used for entertainment, jewelry (including children's jewelry), mental stimulation, stress relief, or a combination of these purposes, and that contains one or more loose or separable magnets, but does not include products sold and/or distributed solely to school educators, researchers, professionals, and/or commercial or industrial users exclusively for educational, research, professional, commercial, and/or industrial purposes.

II. Statutory Authority

A. Rulemaking Under the Consumer Product Safety Act

The subject magnet products are ''consumer products'' that can be regulated by the Commission under the authority of the CPSA. 15 U.S.C. 2052(a). Under section 7 of the CPSA, the Commission is authorized to promulgate a mandatory consumer product safety standard that sets forth performance requirements for a consumer product or that sets forth requirements that a product be marked or accompanied by clear and adequate warnings or instructions. 15 U.S.C. 2056. A performance, warning, or instruction standard must be reasonably necessary to prevent or reduce an unreasonable risk or injury associated with a consumer product.

Section 9 of the CPSA specifies the procedure that the Commission must follow to issue a consumer product safety standard under section 7. In accordance with section 9, the Commission commenced this rulemaking by issuing the NPR, including the proposed rule and a preliminary regulatory analysis under section 9(c) of the CPSA. In addition, the Commission requested comments on all aspects of the NPR, including the risk of injury identified, the regulatory alternatives under consideration, and other possible alternatives for addressing the risk. 15 U.S.C. 2058(c). With this notice, the Commission issues a final rule, along with a final regulatory analysis. 15 U.S.C. 2058(f)(2).[4]

Section 9 also requires the Commission to provide interested persons ''an opportunity for the oral presentation of data, views, or arguments,'' in addition to an opportunity to provide written comments. *Id.* 2058(d)(2). On February 15, 2022, the hearing notice was published in the **Federal Register** (87 FR 8442). The Commission held an online public hearing on the proposed rule on March 2, 2022. The submissions forwarded to the agency by presenters before the hearing, as well as the transcript of the hearing, can be read online at: *www.regulations.gov* under Docket No. CPSC–2021–0037. As discussed in section VI. of this preamble, the Commission considered all the oral and written comments received in response to the proposed rule.

B. Findings Required Under the Consumer Product Safety Act

According to section 9(f)(1) of the CPSA, before promulgating a consumer product safety rule, the Commission must consider and make appropriate findings to be included in the rule on the following issues: (1) the degree and nature of the risk of injury that the rule is designed to eliminate or reduce; (2) the approximate number of consumer products subject to the rule; (3) the public's need for the products subject to the rule, and the probable effect the rule will have on utility, cost, or availability of such products; and (4) the means to achieve the objective of the rule while minimizing adverse effects on competition, manufacturing, and commercial practices. *Id.* 2058(f)(1).

Pursuant to section 9(f)(3) of the CPSA, to issue a final rule, the Commission must find that the rule is ''reasonably necessary to eliminate or reduce an unreasonable risk of injury associated with such product'' and find that issuing the rule is in the public interest. *Id.* 2058(f)(3)(A)&(B). In addition, if a voluntary standard addressing the risk of injury has been adopted and implemented, the Commission must find that: (1) the voluntary standard is not likely to eliminate or adequately reduce the risk of injury, or that (2) substantial compliance with the voluntary standard is unlikely. *Id.* 2058(f)(3(D). The Commission also must find that the expected benefits of the rule bear a reasonable relationship to the costs of the rule and that the rule imposes the least burdensome requirements that would adequately reduce the risk of injury. *Id.* 2058(f)(3)(E)&(F). These findings are provided in section 1262.5 of the regulatory text, below.

III. The Product and Market

A. Description of the Product

The final rule applies to ''subject magnet products,'' which are consumer products that are designed, marketed, or intended to be used for entertainment, jewelry (including children's jewelry), mental stimulation, stress relief, or a combination of these purposes, and that contain one or more loose or separable magnets, but do not include products sold and/or distributed solely to school educators, researchers, professionals, and/or commercial or industrial users exclusively for educational, research, professional, commercial, and/or industrial purposes.

Magnets in subject magnet products typically are small, powerful, magnetic balls, cubes, cylinders, and other shapes that can be used to create jewelry (such as necklaces, bracelets, and simulated piercings), and can be aggregated to make sculptures, or used as desk toys, and as other building sets. One common example of a subject magnet product is a magnet set intended for users 14 years and older. Magnet sets are aggregations of separable magnetic objects that are marketed or commonly used as a manipulative or construction items for entertainment, such as puzzle working, sculpture building, mental stimulation, or stress relief. Magnet sets often contain hundreds to thousands of loose, small, high-powered magnets. Another example of a subject magnet product is jewelry with separable magnets, such as jewelry-making sets, and faux magnetic piercings/studs. Additional examples include products commonly referred to as ''executive toys,'' ''desk toys,'' and ''rock magnets'' (rock-shaped magnets), intended for amusement of users 14 years and older.

Subject magnet products are available in a variety of shapes, sizes (*e.g.,* 2.5 mm, 3 mm, 5 mm), and number of magnets (1 to thousands). Subject magnet products often consist of numerous identical magnets, although some products include non-identical magnets, such as 2 or more different shapes. Subject magnet products commonly include magnets between 3 mm and 6 mm in size and consist of several hundred magnets.

Magnets in subject magnet products have a variety of compositions, such as alloys of neodymium, iron, boron (NIB); ferrite/hematite; aluminum, nickel, cobalt (AlNiCo); and samarium and cobalt (SmCo). NIB and SmCo magnets are often referred to as ''rare earth'' magnets because neodymium and samarium are ''rare earth'' elements found on the periodic table. NIB is typically used in smaller magnets used

[4] The Commission voted 5–0 to publish this notice in the **Federal Register**. Chair Hoehn-Saric and Commissioners Trumka and Boyle issued statements in connection with their votes.

for magnet sets and magnetic jewelry sets, and ferrite/hematite is typically used in larger magnets, such as rock-shaped magnet toys. The magnetized cores of subject magnet products are coated with a variety of metals and other materials to make them more attractive to consumers and to protect the brittle magnetic alloy materials from breaking, chipping, and corroding.

Staff found that 5 mm diameter NIB magnets (the most common size identified in magnet ingestion incidents) typically have strong magnetic properties, ranging between 300 and 400 kG^2 mm^2; and ferrite rock magnets can measure upwards of 700 kG^2 mm^2. Staff also identified products close to the limit of 50 kG^2 mm^2, ranging from approximately 30 kG^2 mm^2 to 70 kG^2 mm^2. Some subject magnet products advertise having flux indexes lower than 50 kG^2 mm^2, which is more common for smaller magnets (*e.g.,* 2.5 mm magnets).

Some subject magnet products are ''children's products.'' A ''children's product'' is a consumer product that is ''designed or intended primarily for children 12 years of age or younger.'' 15 U.S.C. 2052(a)(2). Children's products that are toys are exempt from the rule because they are already required to comply with ASTM F963–17's requirements addressing the magnet ingestion hazard. One example of a subject magnet product that is a children's product and not a toy is children's jewelry.

B. The Product Market

Magnet products intended for the purposes covered in the rule largely entered the market in 2008, with significant sales beginning in 2009. CPSC's previous efforts to address the magnet ingestion hazard have focused primarily on magnet sets, given their involvement in ingestion incidents, their popularity, uses for amusement and jewelry, and the large number of loose, small, high-powered magnets in the sets. Accordingly, much of the information CPSC has about the market for subject magnet products focuses on magnet sets, which are the largest category of identified products involved in magnet ingestions.

From 2009 through mid-2012, most magnet set sellers were retailers with physical stores, such as bookstores, gift shops, and other outlets. In contrast, nearly all current marketers (firms or individuals) of magnet sets sell through internet sites, rather than physical stores. Some of these internet sites are operated by importers, but most operate on the sites of other internet retailer platforms.

In 2018, CPSC contracted with Industrial Economics, Incorporated (IEc), to examine the market for magnet sets. IEc found a total of 69 sellers of magnet sets on internet platforms in late 2018. IEc also identified 10 manufacturers and two retailers.[5] In 2020, CPSC reviewed the status of previously identified sellers of magnet sets on leading internet marketplaces and found evidence of the high turnover rates for these platforms. Only nine of the 69 sellers IEc identified in late 2018 were still selling magnet sets; the remainder either no longer offered magnet sets, or no longer operated on the platforms. In addition, CPSC identified 29 new sellers that had not been detected in late 2018.

In 2018, approximately 57 percent of magnet set sellers on one internet platform fulfilled orders domestically; whereas, in 2020, this number declined to 25 percent. In 2018, approximately 25 percent of magnet set sellers on another internet platform were domestic; whereas, in 2020, this number increased to 87 percent. Non-domestic sellers were located primarily in China and Hong Kong. Magnet sets purchased from foreign internet retailers can be shipped to consumers directly, or from warehouse facilities located domestically.

The most recent review by staff conducted in 2020 indicated that magnet sets were comprised, most commonly, of 216 magnetic spheres, with diameters of 5 mm. Retail prices per set average less than $20. IEc's review in 2018 showed similar findings.[6] Magnet sets are also available in larger sets of 512 separable magnets and 1,000 or more separable magnets. Magnet sets comprised of spheres or cubes with smaller dimensions (2.5 mm to 3 mm) are also marketed, typically at lower prices. Some of these magnet sets are advertised as having magnets with magnetic flux indices less than 50 kG^2 mm^2; below the threshold for being considered hazardous magnets. CPSC staff tested samples of such smaller magnets and found that although 2.5 mm magnets typically had flux indices of less than 50 kG^2 mm^2, many of the magnet sets tested failed the ASTM F963–17 requirements because at least one of the magnets in the set had a flux index of 50 kG^2 mm^2 or more. Sets with 3 mm diameter magnets were found to have flux indices generally above 50 kG^2 mm^2.

Children's and adult jewelry, and other types of adult magnet products intended for entertainment, mental stimulation, and stress relief, which have one or more separable/loose magnets, are also within the scope of the rule. Magnets are marketed online as jewelry-making sets, as well as fake studs/piercings. As discussed in section IV of this preamble, many magnet-ingestion cases involve the use of magnet products described as jewelry, such as bracelets and necklaces, and magnets used as jewelry (including those sold as part of a magnet set).

IV. Risk of Injury

A. Magnet Ingestion

For the NPR, CPSC's Directorate for Health Sciences (HS) assessed the magnet ingestion hazard. Specifically, HS staff found that when a subject magnet product is ingested, a magnet internal interaction hazard can occur. The magnet internal interaction hazard is described in detail in Tab A of Staff's NPR briefing package, as updated for this final rule in Tab A of the Staff's Final Rule briefing package. The risk of injury addressed by this rule is damage to intestinal tissue, caused when someone ingests more than one magnet from a subject magnet product (or one magnet and a ferromagnetic object). The magnets are attracted to each other in the digestive system, damaging the intestinal tissue that becomes trapped between the magnets. In rare cases, there can be interaction between and among magnets in the airways and digestive tract (esophagus). These injuries can be difficult to diagnose and treat because the symptoms of magnet ingestion often appear similar to entirely unrelated conditions, such as stomach viruses. Serious injury, and even death, are consequences of children ingesting magnets.

One of the health threats presented by magnet ingestion is internal magnet interaction leading to pressure necrosis injuries in the alimentary canal. Necrosis is a process of cell death, secondary to injury, which undermines cell membrane integrity and involves intricate cell-signaling responses. In the case of internal magnet interactions, the injury leading to necrosis is the pressure on the involved biological tissues that exceeds local capillary pressure and leads to ischemia.

Volvulus is another type of injury associated with the magnet internal interaction hazard. Volvulus is an obstructive twisting of the GI tract.

[5] IEc classified manufacturers as firms producing and selling their own magnet set products, and it classified retailers as firms that typically sell magnets from multiple manufacturers.

[6] IEc found that magnet sets with 216 magnets accounted for approximately one-third of the models in their market research, with an average price of $16.67. However, sets of 216 magnets that measured 5 mm in diameter averaged $18.62.

Volvulus is often accompanied by abdominal pain, distended abdomen, vomiting, constipation, and bloody stools. If left untreated, volvulus may lead to bowel ischemia, perforation, peritonitis, and death. Volvulus following magnet ingestion has been linked to fatal outcomes. In the United States, CPSC is aware of the death of a 20-month-old child who ingested magnets from a toy construction set, which caused volvulus, and another death of a 2-year-old child who ingested multiple magnets, resulting in small intestine ischemia secondary to volvulus. In addition, CPSC is aware of one death of an 8-year-old child in Poland, due to small intestine ischemia secondary to volvulus, after the victim ingested magnets that resulted in necrosis, toxemia (blood poisoning), hypovolemic shock, and eventually cardiopulmonary failure.

Like outcomes related to volvulus, small bowel ischemia can lead to local tissue necrosis, perforation, and subsequent peritonitis. Small intestine ischemia was implicated in the death of a 19-month-old child following ingestion of multiple magnets. Bowel obstruction, often a consequence of volvulus, is associated with abdominal cramps, vomiting, constipation, and distention. With respect to the relationships among local capillary and intraluminal pressures and magnet ingestions, subsequent outcomes include possible blockage of local blood and nutrient supply; progressive pressure necrosis of the involved tissues; and local inflammation, ulceration, and tissue death, with outcomes such as perforation (hole) or fistula in the GI tract. If left untreated, or otherwise unnoticed (including diagnosis as a stomach virus as noted previously), such events can progress into infection, sepsis, and death. The obstruction from the trapped tissue can elicit vomiting, and the local mucosa irritation may stimulate diarrhea. Advancing pressure necrosis of the involved tissues can lead to necrosis and subsequent leakage of the bowel contents into the peritoneal cavity.

Another example of the potential health outcomes associated with magnet ingestion is a case in which an asymptomatic 4-year-old child sustained several fistulae in the intestines that required surgical repair after ingesting magnets. Fistulae are abnormal passages between channels in the body that are associated with increased mortality. Fistulae may enable the leakage of gut contents into adjacent tissue structures or abdominal cavities, which can lead to infection, inflammation, perforation, sepsis, and possibly death. Fistulae may also bypass portions of the GI tract, thus undermining normal GI function.

Another potential health outcome of magnet ingestions is ulcerations. For example, one case involved a 28-month-old child who experienced stomach ulcerations after ingesting 10 magnets and received treatment with medication after the endoscopic removal and natural passage of the magnets. Untreated ulcers may require surgical intervention if they progress to perforation, and a perforated bowel may lead to leakage from the GI tract which carries risk of death as previously noted. Several magnet ingestion incident reports highlight the threat of perforation with possible outcomes like peritonitis. Peritonitis is an inflammation of the peritoneum, a membrane lining the abdominal cavity, which may be associated with leakage from the GI tract that can lead to sepsis. Sepsis is the body's response to severe infection, and it is associated with elevated rates of morbidity and mortality that can be mitigated with prompt treatment. Treatment of abdominal sepsis may require repair of a leaky GI tract.

Another potential health risk from ingested magnets is an aspiration threat. For example, in one reported case, a 3-year-old child ingested multiple magnets, two of them found attracting to each other on opposing surfaces of the pharyngoepiglottic fold in the throat, presenting an immediate aspiration threat, given the proximity to the airway. Aspiration of magnets has also been reported elsewhere in medical literature. Foreign body aspiration presents a risk of airway obstruction, ventilatory difficulty, choking, hypoxic-ischemic brain injury, pulmonary hemorrhage, and death, among other health outcomes.

Since the NPR, CPSC staff reviewed a recent multicenter cohort study that presented data on 596 cases of patients aged 0 to 21 years, from 25 children's hospitals in a 3-year period following high-powered magnet sales re-entering the U.S. market after judicial vacatur of CPSC's 2014 magnet sets rule (2017–2019).[7] Of the 596 patients treated for high-powered magnet exposures, 562 children (96.2%) ingested magnets, 17 children (2.9%) were treated for nasal or aural magnet foreign bodies, 4 children (0.7%) were treated for magnets in their genitourinary tract, and 1 patient (0.2%) presented with magnets in their respiratory tract. Most patients required serial radiography, with 81.4 percent of children receiving more than one x-ray. Thirty-six children (6%) required a computed tomography (CT) scan. Although magnets passed spontaneously in more than half of patients (53.7%), 276 children (46.4%) required a procedure for magnet removal, or to address complications from magnet ingestion. One hundred ninety-one patients (32%) required endoscopy alone; 58 patients (9.7%) required surgery alone; and 27 patients (4.5%) required both endoscopy and surgery. Magnet exposure led to morbidity in 57 (9.6%) patients, which included perforation (6%), fistula formation (3.7%), bowel obstruction (2.7%), bleeding (0.7%), infection (0.5%), volvulus (0.2%), and/or bowel herniation (0.2%). This study identified 19 children (3.2%) who developed more than one of these listed morbidities. Approximately 55.7 percent of patients required hospitalization (332 patients) and four patients (0.7%) were admitted to the ICU. The median length of hospital stay was 3 days. This study shows that magnet ingestion frequently led to hospitalization, the need for invasive medical management, and caused morbidity in nearly 1 in 10 children who ingested magnets.

B. Incident Data—NEISS

For the NPR, CPSC's Directorate for Epidemiology, Division of Hazard Analysis analyzed reported incidents related to magnet ingestion, see Tab B of Staff's NPR briefing package. For the NPR, CPSC staff analyzed magnet ingestion incident data obtained through the National Electronic Injury Surveillance System (NEISS) and the Consumer Product Safety Risk Management System (CPSRMS). The incident data analyzed for the NPR were extracted on January 8, 2021, and they included magnet ingestion reports that occurred from January 1, 2010, through December 31, 2020. CPSC estimated that 23,700 emergency department (ED)-treated magnet ingestions occurred in that timeframe. Among other observations, CPSC noted that estimated magnet ingestions, excluding products considered to be out-of-scope of the proposed rule, fell during the period the CPSC's 2014 magnet sets rule was in effect, and the estimated ingestions rose after the 2014 magnet sets rule was vacated (79 FR 59962). Specifically, CPSC estimated for the NPR approximately 2,300 ED-treated ingestions of magnets annually from 2010 through 2013 (years prior to the announcement of the magnet sets rule), approximately 1,300 annually from 2014 through 2016 (years the rule was

[7] This study can be found at: *www.regulations.gov/comment/CPSC-2021-0037-0010.*

announced and in place), and approximately 2,300 annually from 2017 through 2020 (the years following the removal of the rule).

For the final rule, Tab B of Staff's Final Rule briefing package updated the incident data analysis, covering magnet ingestions reported to have occurred from January 1, 2010, through December 31, 2021. CPSC staff reviewed the additional data obtained since the NPR, using the same characterizations in the NPR, and staff updated the estimates for ED-treated, magnet ingestions. Staff categorized the data set to assess the involvement of specific magnet product types in magnet ingestion cases. Based on the identification and/or description of the products involved in the cases, staff organized the cases into the following magnet categories: ''magnet set,'' ''magnet toy,'' ''jewelry,'' ''science kit,'' ''home/kitchen,'' ''F963 magnet toy,'' and ''unidentified.'' Staff further combined cases in those magnet categories into groupings as: ''amusement/jewelry''—cases involving magnet sets, magnet toys, or jewelry; ''unidentified''—cases involving unidentified magnet products; and ''exclusions''—cases involving home/kitchen products, ASTM F963 magnet toys, or science kits. In cases where magnet ingestion incident reports contained too limited information for staff to identify the type of product involved in the magnet ingestion, they were classified as ''unidentified.'' As explained in the NPR, staff does have additional information about the incidents in the unidentified product type category; specifically, these incidents involved ingestion of one or more magnets, based on product characteristics and use patterns typically consistent with subject magnet products. 87 FR 1269–75.

To account for the lack of product identification in many magnet ingestion incidents, staff analyzed magnet ingestion incident data in several ways. For one, aggregated information for all of the in-scope, out-of-scope, and unidentified product categories indicates that magnet ingestions, in general, are an issue, and the incidents have increased in recent years. This indicates the propensity of children and teens to ingest magnets, and it demonstrates the increasing risk of injury and death as magnet ingestion cases increase.

Staff also categorized incidents into specific product groups, based on information that was available in incident reports. For incidents that provided information sufficient to enable identification of the product type, the data revealed that six categories of products were involved in magnet ingestions—magnet sets, jewelry, magnet toys, science kits, ASTM F963 magnet toys, and home/kitchen magnets. For some of the incidents in these categories, there was specific information about the product—such as brand names—that allowed staff to determine the particular product involved in the incident. For other incidents in these categories, the product was referred to as a specific type (*e.g.,* magnet sets, desk toy, science kit, kitchen magnet, bracelet).[8] These categories provide information about the products involved in magnet ingestions, and the relative frequency of their involvement, to help determine which products the rule should address.

Staff also aggregated these categories into in-scope and out-of-scope groupings. Staff combined incidents from the magnets sets, magnet toys, and jewelry categories as ''amusement/jewelry'' and combined incidents from the home/kitchen, ASTM F963 magnet toys, and science kit categories as ''exclusions.'' Grouping several product type categories together allowed staff to generate national estimates of ED-treated magnet ingestions, to provide a number of ingestions nationally, and the relative involvement of in-scope and out-of-scope products, which helps identify the magnitude of the risk and the potential benefits of the rule to reduce that risk.

In addition, staff combined the amusement/jewelry and unidentified categories to conduct more detailed analyses. Staff also included incidents in the unidentified product type category within these analyses because there are several factors that indicate that many of the incidents in the unidentified product type category likely fall within the scope of the rule. The following factors were considered.

First, the incident data discussed in this preamble support the conclusion that many of the magnet ingestion incidents in the unidentified product type category actually involved subject magnet products. Of the NEISS magnet ingestion incidents for which staff could identify a product category, the primary products involved were magnet sets, magnet toys, and jewelry; far fewer incidents involved ASTM F963 magnet toys, home/kitchen magnets, or science kits. The same was true for CPSRMS incidents, for which far fewer incidents were in the ''unidentified'' category. Given this consistency across data sets, it is reasonable to conclude that the relative involvement of magnet product types established for magnet ingestions applied to the incidents that lacked product identification as well.

Second, magnet ingestion rates before, during, and after the vacated 2014 magnet sets rule show that a significant portion of magnet ingestion cases involved magnet sets. As discussed in the NPR, CPSC's assessment of incident data, as well as other researchers' assessments of NEISS data, and national poison center data, indicate that magnet ingestion cases significantly declined during the years the magnet sets rule was announced and in effect, compared to the periods before and after the 2014 magnet sets rule. 87 FR 1273–74. Magnet sets were the only products subject to that rule. As such, the significant decline in incidents during that time the rule was in effect, and the significant increase in incidents after that rule was vacated, strongly suggest that many magnet ingestion incidents involve magnet sets. Thus, it is reasonable to conclude that many of the incidents in the unidentified product category involved magnet sets. Moreover, the definition of ''magnet sets'' in the vacated rule was largely equivalent to the description of amusement products in the present rule (*i.e.,* magnet sets and magnet toys), suggesting that many magnet ingestion incidents, including those with unidentified product types, involve amusement products.

Third, incident data and recalls regarding magnets in children's toys further support the conclusion that magnet ingestions categorized as relating to ''unidentified'' products largely involved subject magnet products. ASTM F963 magnet toys make up only a small portion of magnet ingestion incidents where the product can be identified. It is reasonable to conclude that this holds true for unidentified products in magnet ingestions as well.

[8] Staff categorized incidents based on all of the information available in the reports, including descriptions, names, and uses of the product. However, for some of the incidents in which the report provided a product type but not a specific product brand/name, it is possible that the product was actually from another category. For example, the jewelry category includes cases in which the report indicates that the magnets were described as jewelry at the time of the incident, such as magnetic earrings. It is possible that the magnets in such cases were actually from a non-jewelry product. Similarly, products categorized as magnet toys could actually be another product type; for example, a product described as an ''executive desk toy,'' which did not meet the parameters for the magnet set category, and did not indicate marketing to children under 14 years old, was included in the magnet toy group, although it is possible that the product actually was a magnet set or other product type, and the report lacked information to indicate this. However, even if incidents in these categories were miscategorized, they likely would still fall within the scope of the rule because they meet the description of an in-scope product.

Taken together, these factors support the conclusion that most magnet ingestion incidents, including those in the ''unidentified'' product type category, involved products that fall within the ''amusement/jewelry'' (magnet sets, magnet toys, and jewelry) category, and not the ''exclusions'' (science kit, home/kitchen, or ASTM F963 magnet toys) category. For these reasons, staff included magnet ingestion incidents from the ''unidentified'' product type category in many of its analyses; to exclude such incidents likely would vastly underrepresent ingestions of subject magnet products.

For data extracted since the NPR, staff used the same categories and groupings for additional incidents. The new data extracted on January 13, 2022, included: (1) addition of 112 NEISS-reported incidents that occurred from January 1, 2021, through December 31, 2021, with an estimated 2,500 ED-treated ingestions of magnets from in-scope products which was higher than most of the preceding years, and (2) 111 additional CPSRMS-reported incidents that occurred from February 1, 2016, through December 27, 2021.[9] Staff provided the NEISS total estimates for 2010 through 2021, as follows:

- There were an estimated 26,600 (2,800 in 2021) ED-treated magnet ingestions involving magnet products of various types from 2010 through 2021.
- An estimated 5,000 of the 26,600 (20%) magnet ingestions involved magnet sets, magnet toys, or jewelry.
- An estimated 1,600 of the 26,600 (6%) magnet ingestions involved products identified as out-of-scope.
- An estimated 20,000 of the 26,600 (75.2%) magnet ingestions involved unidentified products.
- An estimated 5,000 victims (20%) were hospitalized or transferred to another hospital after treatment.
- The middle 3 years (2014 through 2016) show significantly fewer of these magnet ingestions (estimated 1,300 per year), compared with earlier and more recent years (*i.e.,* compared with 2,300 per year from 2010 through 2013, and 2,400 per year from 2017 through 2021).

Table 1 provides the number of cases for each magnet category, and Table 2 provides the estimates of ED-treated magnet ingestions identified in the NPR, since the NPR, and overall, from 2010 through 2021.

TABLE 1—COUNT OF MAGNET INGESTION CASES TREATED IN NEISS HOSPITAL EMERGENCY DEPARTMENTS BY MAGNET CATEGORY

[2010–2021]

Individual magnet category	NPR	2021 (since NPR)	2010–2021 (combined)	Combined magnet category	NPR	2021 (since NPR)	2010–2021 (combined)
Magnet Set	58	7	65	Amusement/Jewelry	221	24	245
Jewelry *	53	1	54				
Magnet Toy	110	16	126				
Unidentified	793	81	874	Unidentified	794	81	874
Science Kit	1	0	1	Exclusions	57	7	65
F963 magnet toy	11	2	13				
Home/Kitchen	46	5	51				
Total	1,072	112	1,184	Total	1,072	112	1,184

* Includes cases of uncertain product classification for which the magnets were being used as or like jewelry.
Source: NEISS, CPSC.

TABLE 2—ESTIMATED NUMBER OF MAGNET INGESTIONS TREATED IN HOSPITAL EMERGENCY DEPARTMENTS BY MAGNET CATEGORY

[2010–2021]

Magnet category	NPR			Since NPR			Combined		
	Estimate	CV	N	Estimate	CV	N	Estimate	CV	N
Amusement/Jewelry	4,400	0.17	221	**	**	24	5,000	0.16	245
Unidentified	18,100	0.14	793	1,900	0.26	81	20,000	0.15	874
Exclusions	1,300	0.20	58	**	**	7	1,600	0.19	65
Total	23,700	0.21	1,072	2,500	0.22	105	26,600	0.14	1,184

** This estimate does not meet NEISS reporting criteria. For a NEISS estimate to satisfy all reporting criteria, the coefficient of variation (CV) cannot exceed 0.33, there must be at least 20 sample cases (N), and there must be at least 1,200 estimated injuries.
Source: NEISS, CPSC. Estimates rounded to the nearest 100. Throughout this section, summations of estimates may not add to the total estimates provided in the tables, due to rounding. Estimates are derived from data in the NEISS sample. Estimates spanning periods of multiple years (such as the 12 years from 2010 to 2021) are total estimates, and *not* annual averages.

Table 3 provides the estimates for in-scope magnet categories in ED-treated ingestions in NPR, since NPR, and combined from 2010 through 2021. Combining only the ''amusement/jewelry'' and ''unidentified'' categories, and omitting ''exclusions,'' leaves us with a total of 25,000 estimated magnet ingestions that involved or likely involved the subject magnet products, as shown in Table 3. Of the 25,000 in-scope magnet ingestions, at least an estimated 5,000 (20%) correspond to cases associated with amusement/jewelry category, and an estimated 20,000 (80%) correspond to the unidentified category. When considering the data received since the NPR, the majority of the cases involved unidentified products, similar to the NPR data. As discussed above, the record strongly supports the conclusion that many of these unidentified magnet products were likely subject magnet products.

[9] The CPSRMS data analyzed in support of the NPR were extracted on January 13, 2022. Reporting to the CPSRMS database is ongoing, and therefore, it is common for reports to be received for incidents from prior years. This also means CPSC in the coming years may receive additional CPSRMS reports of magnet ingestions within the studied period, particularly 2021.

TABLE 3—ESTIMATED NUMBER OF IN-SCOPE MAGNET INGESTIONS TREATED IN HOSPITAL EMERGENCY DEPARTMENTS BY MAGNET CATEGORY
[2010–2021]

Magnet category	NPR			Since NPR			Combined		
	Estimate	CV	N	Estimate	CV	N	Estimate	CV	N
Amusement/Jewelry	4,400	0.17	221	(**)	(**)	24	5,000	0.16	245
Unidentified	18,100	0.15	793	1,900	0.26	81	20,000	0.15	874
Total	22,500	0.14	1,014	2,500	0.22	105	25,000	0.14	1,119

** This estimate does not meet NEISS reporting criteria. For a NEISS estimate to satisfy all reporting criteria, the coefficient of variation (CV) cannot exceed 0.33, there must be at least 20 sample cases (N), and there must be at least 1,200 estimated injuries.
Source: NEISS, CPSC. Estimates rounded to the nearest 100. Throughout this section, summations of estimates may not add to the total estimates provided in the tables, due to rounding. Estimates are derived from data in the NEISS sample. Estimates spanning periods of multiple years (such as the 12 years from 2010 to 2021) are total estimates, and *not* annual averages.

Table 4 presents the breakdown by age group.

TABLE 4—ESTIMATED NUMBER OF IN-SCOPE MAGNET INGESTIONS TREATED IN HOSPITAL EMERGENCY DEPARTMENTS BY AGE GROUP
[2010–2021]

Age group	Estimate			CV			N		
	NPR	Since NPR	Combined	NPR	Since NPR	Combined	NPR	Since NPR	Combined
Under 2 years	2,700	(**)	2,800	0.19	(**)	0.18	120	8	128
2 years	2,300	(**)	2,400	0.27	(**)	0.25	89	5	94
3–4 years	4,700	(**)	5,100	0.16	(**)	0.15	196	26	222
5–7 years	4,300	(**)	5,200	0.14	(**)	0.14	207	26	233
8–10 years	3,900	(**)	4,800	0.19	(**)	0.20	179	27	206
11–13 years	3,400	(**)	3,600	0.17	(**)	0.18	182	12	194
14 or More years	(**)	(**)	(**)	(**)	(**)	(**)	41	1	42
Total	22,500	2,500	25,000	0.14	0.22	0.14	1,014	105	1,119

** This estimate does not meet NEISS reporting criteria. For a NEISS estimate to satisfy all reporting criteria, the coefficient of variation (CV) cannot exceed 0.33, there must be at least 20 sample cases, and there must be at least 1,200 estimated injuries.
Source: NEISS, CPSC; estimates are rounded to nearest 100.

C. Databases Other Than NEISS

CPSC staff also analyzed magnet ingestion incident data obtained through CPSRMS. Staff's review of the CPSRMS data showed that from 2010 through 2021, there were 395 reported magnet ingestions in the database. Of these, 111 were reported since the NPR, including 56 magnet ingestions that occurred in 2021. Although the CPSRMS reports are anecdotal, and therefore, cannot be used for generating nationally representative estimates, they provide a minimum number of incidents, and they tend to include more information about the incidents and products involved, in comparison to the NEISS data. CPSRMS reports may contain photos, links to websites, detailed narratives, and medical documents; whereas NEISS reports contain brief narratives culled from medical records developed during the ED visit. At least 167 CPSRMS-reported magnet ingestions (including 43 incidents since the NPR) resulted in surgery, such as laparoscopy, laparotomy, appendectomy, cecostomy, enterotomy, colostomy, cecectomy, gastrotomy, jejunostomy, resection, and transplant, among others. At least 140 CPSRMS-reported magnet ingestions resulted in internal interaction through body tissue (including 32 incidents since the NPR). In cases that did not result in surgery, it was still common for victims to receive serial X-rays, and in many cases, endoscopies, and anesthesia.

D. Magnet Ingestions Incident Trends

As discussed in section 1.A. in the preamble, the Commission issued a magnet sets rule in 2014 that applied to magnet sets, which are a subset of the subject magnet products addressed in this rule. The 2014 magnet sets rule took effect in April 2015, and the rule remained in effect until it was vacated by the U.S. Court of Appeals for the Tenth Circuit in November 2016. As explained in the NPR, 87 FR 1274, and after further review of the incidents extracted after the NPR, staff noted a considerable change in magnet ingestion rates during the period of the Commission's later-vacated rule on magnet sets. CPSC's assessment of incident data, as well as other researchers' assessments of NEISS data and national poison center data, indicate that magnet ingestion cases significantly declined during the years in which the 2014 magnet sets rule was announced and in effect, compared to the periods before and after the rule.

Table 5 provides the annual estimates for ED-treated, magnet ingestions by year, from 2010 through 2021. Some of the year-to-year changes may be attributable to random variation in the sample; however, statistically significant differences emerge. Overall, 2014 through 2016 (when 2014 magnets sets rule had been announced and was in effect) had the lowest number of estimated annual ED-treated magnet ingestions. The analysis of the NEISS data showed that there were insufficient cases in 2014, and only 2014, to provide an estimate. Table 5 further shows that in-scope magnet ingestions are higher for the 2017 through 2021 period, than the previous periods, with more estimated in-scope magnet ingestions in 2021 (2,500) than most of the preceding years, including 2018 through 2020.

TABLE 5—ESTIMATED NUMBER OF IN-SCOPE * MAGNET INGESTIONS TREATED IN HOSPITAL EMERGENCY DEPARTMENTS BY YEAR

Year	Estimate	CV	N
2010	[a] 1,900	0.18	91
2011	[a b] 2,500	0.18	101
2012	[a] 2,700	0.26	115
2013	2,000	0.21	88
2014	(**)	(**)	62
2015	1,200	0.24	61
2016	1,400	0.24	77
2017	[a b] 2,900	0.25	112
2018	[a b] 2,400	0.18	120
2019	1,800	0.22	91
2020	2,200	0.21	96
2021	[a b] 2,500	0.22	105
Total	25,000	0.14	1,119

[a] Estimate is significantly greater than for the year 2015 (p-value<0.05).
[b] Estimate is significantly greater than for the year 2016 (p-value<0.05).
* These estimates exclude cases identifying non-subject-product-type magnets, and therefore, do not represent all magnet ingestions treated in hospital emergency departments.
** This estimate does not meet NEISS reporting criteria. For a NEISS estimate to satisfy all reporting criteria, the coefficient of variation (CV) cannot exceed 0.33, there must be at least 20 sample cases (N), and there must be at least 1,200 estimated injuries.
Source: NEISS, CPSC; estimates rounded to nearest 100. Summations of estimates may not add to the total estimates, due to rounding.

To assess these trends further, CPSC grouped years in relation to the vacated 2014 magnet sets rule, using the periods: 2010 through 2013 (prior to the announcement of the rule); 2014 through 2016 (when the final rule was announced and in effect [10]); and 2017 through 2021 (after the rule was vacated by the Court of Appeals). Table 6 shows the estimated number of magnet ingestions treated in U.S. hospital EDs during these periods, using annual estimates for each period, to account for the periods including different numbers of years. For 2010 through 2013, there were an estimated 2,300 ED-treated magnet ingestion incidents per year; for 2014 through 2016, there were an estimated 1,300 ED-treated magnet ingestion incidents per year, and for 2017 through 2021, there were an estimated 2,400 ED-treated magnet ingestion incidents per year. Thus, during the period when the 2014 magnet sets rule was announced and in effect (2014–2016), magnet injury ingestion estimates are lowest by a significant margin, compared with the earlier and more recent periods. This data is consistent with the annual yearly estimates provided in Table 5, which shows that the annual estimate for in-scope magnet ingestions is higher for the 2017 through 2021 period, than the previous periods, with more estimated in-scope magnet ingestions (2,500) than most of the preceding years, including 2018 through 2020.

TABLE 6—ESTIMATED NUMBER OF IN-SCOPE MAGNET INGESTIONS TREATED IN HOSPITAL EMERGENCY DEPARTMENTS BY PERIOD

Period	Annual average estimate	CV	N	Years in period
2010–2013	2,300	0.16	395	4
2014–2016	1,300	0.20	200	3
2017–2021	2,400	0.15	524	5
2010–2021	2,100	0.14	1,119	12

Source: NEISS, CPSC; estimates rounded to nearest 100.

Although CPSRMS data cannot be used to draw statistical conclusions, those data also suggest a similar decline in incidents for the period when the 2014 magnet sets rule was announced and in effect, as shown in Figure 1, below.

BILLING CODE 6355–01–P

[10] Staff grouped 2014, 2015, and 2016 for this analysis, because these are the years firms were likely to comply with the size and strength limits in the magnet sets rule. Because the standard took effect in April 2015, and remained in effect until November 2016, firms were required to comply with the standard for nearly all of 2015 and 2016. Although the rule was not in effect in 2014, the proposed rule was published in 2012, and the final rule was published, with essentially the same requirements, in October 2014. Once an NPR is published, firms have notice to prepare for the requirements that may be finalized; and once a final rule is published, firms often take steps to comply with the rule, even before it takes effect. Accordingly, it is reasonable to conclude that firms took steps to comply with the magnet sets standard in 2014.

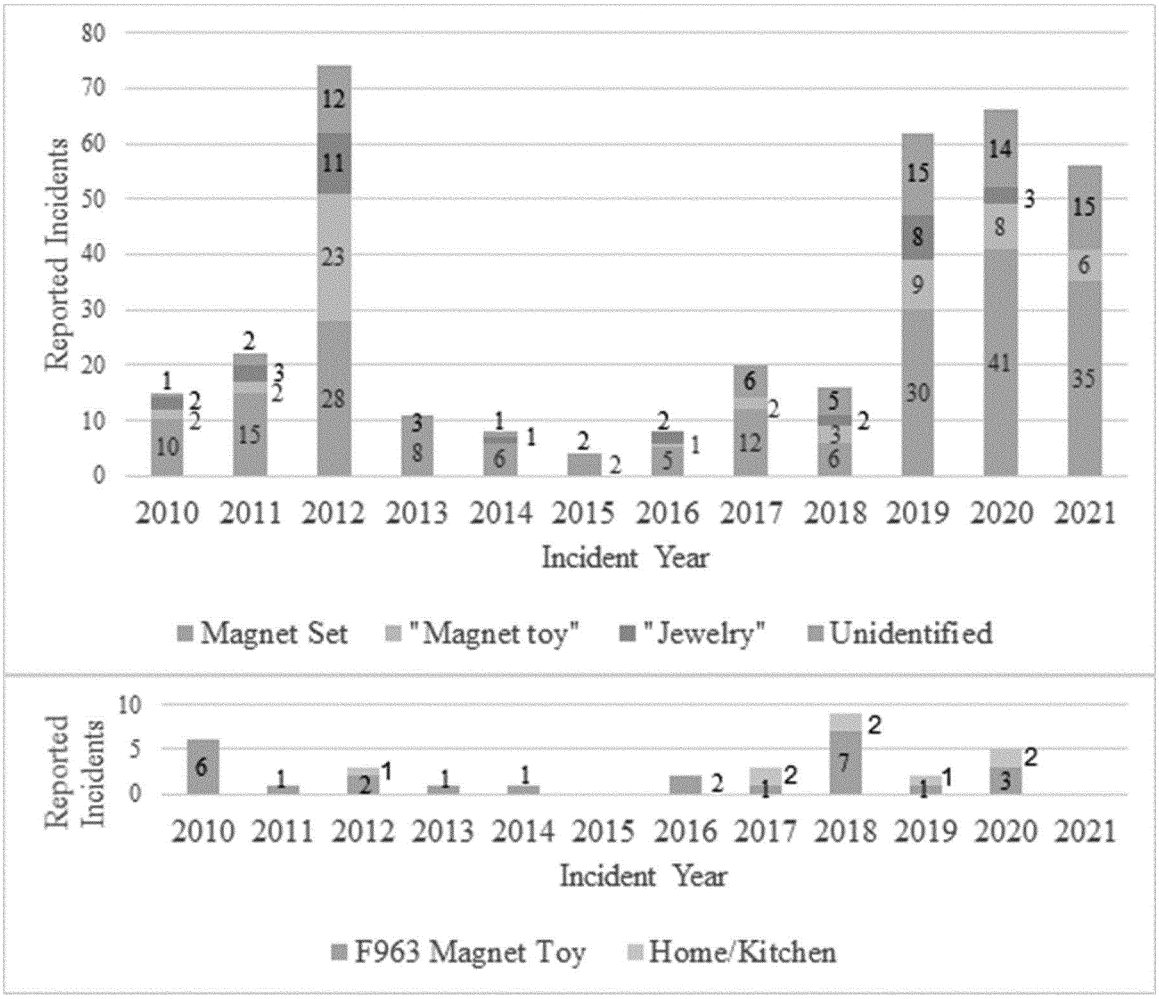

Figure 1. Annual incidents involving magnet product categories. *CPSRMS reporting for the years 2020 through 2021 is ongoing, and the counts for those years may increase as reporting continues.

BILLING CODE 6355–01–C

Table 7 shows CPSRMS-reported magnet ingestions, by period, using incidents categorized as ''amusement/jewelry'' and ''unidentified'' product types, consistent with the NEISS analysis. Table 7 breaks down the number of reported magnet ingestions in each category, including reported incidents from the NPR, and additional reports since the NPR. Of the 111 newly reported incidents, staff identified 64 additional incidents as involving a magnet set and 33 additional incidents as an unidentified product.

TABLE 7—MAGNET CATEGORY AND SCOPE FOR REPORTED MAGNET-INGESTIONS, JANUARY 2010–DECEMBER 2021 *

Magnet category	Reported incidents			Scope	Reported incidents		
	NPR	Since NPR	2010–2021 total		NPR	Since NPR	Total
Magnet Set	134 (47.2%)	64 (57.7%)	198 (50.1%)	Amusement/Jewelry.	214 (90.5%)	72 (94.6%)	286 (91.6%)
Magnet Toy	49 (17.3%)	7 (6.3%)	56 (14.2%)				
Jewelry	31 (10.9%)	1 (0.9%)	32 (8.1%)				
Unidentified	43 (15.1%)	33 (29.7%)	76 (19.2%)	Unidentified	43 (14.8%)	33 (29.7%)	76 (19.0%)
Science Kit	0	0	0				
F963 Magnet Toy	21 (7.4%)	4 (3.6%)	25 (6.3%)	Exclusions	27 (9.5%)	6 (5.4%)	33 (8.4%)
Home/Kitchen	6 (2.1%)	2 (1.8%)	8 (2.0%)				
Total	284 (100%)	111 (100%)	395 (100%)	Total	284 (100%)	111 (100%)	395 (100%)

* CPSRMS reporting for the years 2020–2021 is ongoing.

Counts of reported incidents may increase, especially for 2020 and 2021, as CPSC continues to collect data. Moreover, due to the anecdotal nature of the data, the data in this analysis are to be considered a minimum of all incidents that have actually occurred.

V. Relevant Existing Standards

In the NPR, CPSC identified six existing safety standards that in some way address the magnet ingestion hazard. 87 FR 1282. The NPR described these standards in detail and provided CPSC staff's assessment of their adequacy in addressing injuries and deaths associated with magnet ingestions, focusing on provisions that are relevant to the magnet ingestion hazard. *Id.* at 1282–87. None of the standards apply to all subject magnet products, and the standards do not adequately address the hazard for the subject magnet products. Since the NPR, there were no changes in the magnet requirements specified in these standards. The standards are summarized below. Four of the standards are domestic standards, and all but one (ASTM F963–17) are voluntary:

- ASTM F963–17, *Standard Consumer Safety Specification for Toy Safety*;
- ASTM F2923–20, *Standard Specification for Consumer Product Safety for Children's Jewelry*;
- ASTM F2999–19, *Standard Consumer Safety Specification for Adult Jewelry*; and
- ASTM F3458–21, *Standard Specification for Marketing, Packaging, and Labeling Adult Magnet Sets Containing Small, Loose, Powerful Magnets (with a Flux Index ≥50 kG² mm²)*.

In addition, two are international safety standards:

- EN 71–1: 2014, *Safety of Toys; Part 1: Mechanical and Physical Properties*; and
- ISO 8124–1: 2018, *Safety of Toys—Part 1: Safety Aspects Related to Mechanical and Physical Properties.*

A. ASTM F963–17

ASTM F963 was originally approved in 1986, and since then, the standard has been revised numerous times. In 2007, ASTM updated the standard to include requirements to address the magnet ingestion hazard in children's toys. In subsequent revisions, ASTM added requirements for toys containing magnets. ASTM F963 is a mandatory consumer product safety standard. ASTM approved ASTM F963–17 on May 1, 2017, and published it in August 2017. ASTM F963–17, which is the most recent version of the standard, is incorporated by reference in 16 CFR part 1250.

1. Scope

ASTM F963–17 applies to ''toys,'' which the standard defines as objects designed, manufactured, or marketed as playthings for children under 14 years old. As such, the standard does not apply to products that are intended for users 14 years or older, or products that would not be considered playthings. When ASTM adopted the provisions regarding magnets, it explained that the purpose of the requirements was to address magnet ingestion incidents resulting in serious injury or death, by identifying magnets and magnetic components that can be readily swallowed.[11]

2. Performance Requirements for Magnets

The standard specifies that toys may not contain a loose as-received ''hazardous magnet'' or a loose as-received ''hazardous magnetic component.'' In addition, toys may not liberate a ''hazardous magnet'' or ''hazardous magnetic component'' after specified use-and-abuse testing, which consists of soaking under water, cycling attachment and detachment, drop testing, torque testing, tension testing, impact testing, and compression testing. The standard excepts from the requirements ''magnetic/electrical experimental sets'' intended for children 8 years and older—such products need only comply with warning requirements, discussed below.

The standard defines a ''hazardous magnet'' as a magnet that is a small object (*i.e.,* fits entirely within a small parts cylinder specified in the standard) and has a flux index of 50 kG² mm² or more (as measured in accordance with the method specified in the standard). Thus, a magnet must be both small and strong, according to the criteria in the standard, to be ''hazardous.'' A ''hazardous magnetic component'' is any part of a toy that is a small object and contains an attached or imbedded magnet with a flux index of 50 kG² mm² or more.

ASTM F963–17 describes the small parts cylinder in section 4.6; to be a small object, the magnet must fit entirely within the cylinder. The small parts cylinder depicted in ASTM F963–17 is the same as the small parts cylinder in CPSC's regulations, at 16 CFR 1501.4. Sections 8.25.1 through 8.25.3 describe the test methodology to measure the maximum absolute flux of a magnet and to calculate the flux index. A flux index is a calculated value of magnetic density and size. The flux index of a magnet is calculated by multiplying the square of the magnet's maximum surface flux density (in KGauss (kG)) by its cross-sectional area (in mm²).

3. Warning Requirements

ASTM F963–17 does not include specific labeling requirements for toys containing loose as-received hazardous magnets or hazardous magnetic components, except for ''magnetic/electrical experimental sets'' intended for children 8 years and older, which are exempt from the performance requirements and need only meet labeling requirements. The standard defines a ''magnetic/electrical experimental set'' as a ''toy containing one or more magnets intended for carrying out educational experiments that involve both magnetism and electricity.'' Section A12.4 (Magnets) in the standard explains that this definition is intended to cover only products that combine magnetism and electricity. The packaging and instructions for magnetic/electrical experimental sets intended for children 8 years and older must be labeled with a warning that addresses the magnet ingestion hazard.

4. Assessment of Adequacy

The size and strength requirements in ASTM F963–17 are consistent with the requirements in this rule for subject magnet products. Although the size and strength requirements are adequate to address the hazard, ASTM F963–17 only applies to products designed, manufactured, or marketed as playthings for children under 14 years old; it does not apply to products intended for older users or products that would not be considered playthings. Accordingly, the Commission finds that compliance with the standard is not likely to adequately reduce the magnet ingestion hazard.

As the incident data indicate, children and teens commonly access and ingest magnets from products intended for older users. Both NEISS and CPSRMS data indicate that the most common products identified in magnet ingestions were magnet sets and magnet toys, which are products that are intended for users 14 years or older, or where the intended user age was unknown but there were no indications that the product was intended for users under 14 years. Despite the involvement of products intended for users 14 years and older, the vast majority of magnet

[11] ASTM F963–17; section A9.4 (Magnets in Toys).

ingestion incidents involved children under 14 years old. For example, among CPSRMS incidents for which the victim's age was known, the most common ages that ingested magnet sets were 2, 8, 9, and 10 years old.

The sources from which children access ingested magnets further illustrates the need to address magnets in products intended for older users. For example, according to CPSRMS data, children and teens commonly ingest magnets that belong to other family members, in the home, from friends, or loose in the environment, suggesting their access is not limited to toys intended for them.

In addition, ASTM F963–17 does not apply to products that are not intended to be playthings. Both NEISS and CPSRMS data indicate that many products involved in magnet ingestion incidents are described as jewelry, and that children of various ages ingest magnet jewelry (*e.g.,* accidentally ingesting magnets while simulating lip, tongue, and cheek piercings). Because ASTM F963–17 only applies to playthings, it does not apply to jewelry, regardless of the intended user age.[12]

As such, ASTM F963–17 is not sufficient to address the magnet ingestion hazard, because it does not impose any requirements on products intended for users 14 years or older or non-toy jewelry, which are known to be involved in many magnet ingestion incidents.

B. ASTM F2923–20

ASTM first issued ASTM F2923 in 2011. The current version of the standard is ASTM F2923–20, which was approved on February 1, 2020, and published in March 2020.

1. Scope

ASTM F2923–20 applies to ''children's jewelry,'' which is jewelry designed or intended primarily for use by children 12 years old or younger. The standard defines ''jewelry'' as a product that is primarily designed and intended as an ornament worn by a person. The standard does not apply to toy jewelry or products intended for a child when playing. The standard includes requirements that are intended to address ingestion, inhalation, and attachment hazards associated with children's jewelry that contains a hazardous magnet or hazardous magnetic component. The standard defines a ''hazardous magnet'' and ''hazardous magnetic component'' by referencing the definition in ASTM F963, except that the standard exempts chains that are longer than 6 inches from the definition of ''hazardous magnetic component.''

2. Performance Requirements for Magnets

ASTM F2923–20 prohibits children's jewelry from having a hazardous magnet or hazardous magnetic component. The standard excepts from this requirement children's jewelry intended for children 8 years and older consisting of earrings, brooches, necklaces, or bracelets—such products need only comply with warning requirements, discussed below. In addition, the standard prohibits children's jewelry from liberating a hazardous magnet or hazardous magnetic component after the use-and-abuse testing specified in ASTM F963.

3. Warning Requirements

ASTM F2923–20 does not include specific labeling requirements for children's jewelry containing hazardous magnets or hazardous magnetic components, except for children's jewelry intended for children 8 years and older that consists of earrings, brooches, necklaces, or bracelets. These products are exempt from the performance requirements and need to include a warning that addresses the magnet ingestion hazard. Instructions that accompany the product must also include these warnings.

4. Assessment of Adequacy

Although the size and strength requirements in the standard adequately address the magnet ingestion hazard, the standard excepts certain children's jewelry from these performance requirements, and the scope of products covered by the rule makes the standard insufficient to address magnet ingestions generally.

The first issue with the standard is that it excludes from the size and strength requirements for magnets children's jewelry that is intended for children 8 years and older that consists of earrings, brooches, necklaces, and bracelets. Applying only warning requirements to these products is not adequate to reduce the magnet ingestion hazard. As the incident data indicate, almost half of magnet ingestion incidents involve children 8 years and older, and children and teens, particularly in this age group, commonly were using magnets as jewelry at the time of ingestion. As explained further in the discussion of ASTM F3458–21 below, caregivers and children commonly do not heed warnings, and children and teens commonly access magnets that are separated from the packaging on which warnings are provided (the magnets within the scope of the final rule are too small to have legible and complete warnings printed on them).

The second issue with the standard is that it applies only to jewelry that is designed or intended primarily for use by children 12 years old or younger. As such, it does not impose requirements on magnet sets or magnet toys intended for users 14 years and older, which are the most common product types identified in magnet ingestion incidents. The standard also does not apply to jewelry intended for users over 12 years old. Although the incident data do not indicate the intended user age of jewelry products involved in ingestions, the data indicate that children and teens of various ages ingested magnets intended for users 14 years and older when using the magnets as jewelry, making it is reasonable to conclude that jewelry intended for users over 12 years old poses an ingestion hazard for children and teens.

C. ASTM F2999–19

ASTM first issued ASTM F2999 in 2013; the current version of the standard is ASTM F2999–19, which ASTM approved on November 1, 2019, and published in November 2019.

1. Scope

ASTM F2999–19 establishes requirements and test methods for certain hazards associated with adult jewelry, including magnets. The standard defines ''adult jewelry'' as jewelry designed or intended primarily for use by consumers over 12 years old. It defines ''jewelry'' as a product primarily designed and intended as an ornament worn by a person, and provides several examples, such as bracelets, necklaces, earrings, and jewelry craft kits where the final assembled product meets the definition of ''jewelry.'' The standard defines a ''hazardous magnet'' as ''a magnet with a flux index >50 as measured by the method described in Consumer Safety Specification F963 and which is swallowable or a small object.''

[12] Section 1.3 of ASTM F963–17 states that the standard applies to ''toys intended for use by children under 14 years of age'' and section 3.1.91 defines a ''toy'' as ''any object designed, manufactured, or marketed as a plaything for children under 14 years of age.'' Section 1.3.1 of ASTM F2923–20 specifies that the standard, which applies to children's jewelry, does not apply to ''toy jewelry or any other products that are intended for use by a child when the child plays (that is, a necklace worn by a doll or stuffed animal; novelty jewelry with play value)'' and further states that ''any product which is predominately used for play value is a toy'' and ''toys are subject to the requirements of Consumer Safety Specification F963.''

2. Performance Requirements for Magnets

ASTM F2999–19 does not include any performance requirements for adult jewelry that contains magnets; it specifies only labeling requirements, discussed below.

3. Labeling Requirements

ASTM F2999–19 states that ''adult jewelry that contains hazardous magnets as received should include a warnings statement which contains the following text or substantial equivalent text which clearly conveys the same warning.'' Rather than the mandatory language ASTM standards typically use (*i.e.,* shall), the standard merely recommends (*i.e.,* should) that warnings regarding hazardous magnets be provided with adult jewelry. The warning statement provided in the standard warns of the internal interaction hazard if magnets are swallowed or inhaled, and the warning recommends seeking immediate medical attention.

4. Assessment of Adequacy

CPSC assesses that ASTM F2999–19 does not adequately reduce the risk of injury and death associated with magnet ingestions. The standard does not include any requirements for adult jewelry containing magnets—rather, it suggests complying with the magnet labeling provisions. As incident data indicate, many magnet ingestion incidents involve products used as jewelry, and children and teens access products intended for older users. This demonstrates the need for a mandatory requirement for adult jewelry.

In addition, the only provisions in the standard that address magnet ingestions are warnings. As discussed further in the ASTM F3458–21 section below, warning requirements, alone, are not adequate to address the magnet ingestion hazard because caregivers and children commonly do not heed warnings, and children and teens commonly access magnets that are separated from their packaging, where warnings are provided.

The scope of the standard also makes it insufficient to address adequately the magnet ingestion hazard. Because it applies only to jewelry designed or intended primarily for use by consumers over 12 years old, the standard does not impose requirements on magnet sets or magnet toys intended for users 14 years and older, which are the most common products identified in magnet ingestion incidents. It also does not impose requirements on jewelry intended for users 12 years old and younger. Although the incident data do not indicate the intended user age of jewelry involved in magnet ingestions, because many incidents involve children 12 years old and younger, it is reasonable to conclude that jewelry intended for such users poses a magnet ingestion hazard for children and teens.

D. ASTM F3458–21

In 2019, ASTM Subcommittee F15.77 on Magnets began work to develop a standard for magnet sets intended for users 14 years and older. On February 15, 2021, ASTM approved ASTM F3458–21, and published the standard in March 2021. ASTM F3458–21 consists of marketing, packaging, labeling, and instructional requirements for magnet sets intended for users 14 years and older.

1. Scope

ASTM F3458–21 defines a ''magnet set'' as ''an aggregation of separable magnetic objects that are marketed or commonly used as a manipulative or construction item for puzzle working, sculpture building, mental stimulation, education, or stress relief.'' It also defines a ''small, powerful magnet'' as an ''individual magnet of a magnet set that is a small object'' and has a flux index of 50 kG^2 mm^2 or more. The criteria for identifying a small object and the flux index are the same as in ASTM F963–17.

2. Performance Requirements for Magnets

The standard includes performance criteria in the form of test methods to determine if a product is a ''small, powerful magnet,'' and test methods for assessing label permanence. However, the standard does not include performance requirements preventing small, powerful magnets from being used in magnet sets. Instead, ASTM F3458–21 includes requirements for instructional literature, sales/marketing, labeling, and packaging, discussed below.

3. Instructional Literature Requirements

ASTM F3458–21 requires magnet sets intended for users 14 years and older to come with instructions that address assembly, maintenance, cleaning, storage, and use. The instructions must include warnings (as specified below), the manufacturer's suggested strategy for counting and storing magnets, a description of typical hazard patterns (*e.g.,* young children finding loose magnets), an illustration of the hazard, a description of typical symptoms associated with magnet ingestion, and statements regarding medical attention when magnets are ingested.

4. Sales/Marketing Requirements

The standard prohibits manufacturers from knowingly marketing or selling magnet sets intended for users 14 years and older to children under 14 years old and requires them to ''undertake reasonable efforts'' to ensure the product is not marketed or displayed as a children's toy. For online sales, manufacturers must ''undertake reasonable efforts'' to ensure that online sellers do not sell magnet sets intended for users 14 years and older to children under 14 years. When selling directly to consumers online, manufacturers must include warnings (as specified below) and instructional literature about the hazard pattern.

5. Labeling Requirements

ASTM F3458–21 requires magnet sets intended for users 14 years and older to bear warnings on the retail packaging and ''permanent storage container,'' which the standard defines as a container designed to hold the magnet set when it is not in use. At a minimum, the warnings must address the hazard associated with magnet ingestions, direct users to keep the product away from children, and provide information about medical attention. The standard includes an example warning label and specifies design and style requirements for the warning label. In addition, the standard requires the label to be permanent and provides a test method for assessing label permanence.

6. Packaging Requirements

The standard requires magnet sets intended for users 14 years and older to be sold with or in a permanent storage container. The permanent storage container must include a way to verify that all the magnets have been returned to the container. In addition, the standard requires the permanent storage container to be re-closeable and include means of restricting the ability to open the container.

7. Assessment of Adequacy

CPSC assesses that ASTM F3458–21 would not adequately reduce the risk of injury and death associated with magnet ingestions. The standard only applies to magnet sets intended for users 14 years and older. As such, it imposes no requirements on other products intended for users 14 years and older, or on jewelry (both children's and adult), which are shown to be involved in magnet ingestion incidents.

In addition, ASTM F3458–21 does not include performance requirements to prevent magnet sets intended for users 14 years and older from containing small, powerful magnets, and instead,

relies on requirements to inform and encourage consumers to keep magnets away from children. As incident data indicate, children and teens access magnet products, including magnet sets, that are intended for older users, making it important to address the magnet ingestion hazard for magnet sets intended for users 14 years and older. Safety messaging (*e.g.,* warnings and instructions) and packaging requirements, without performance requirements for the magnets themselves, are not likely to adequately address the hazard.

a. Safety Messaging. One factor that weighs against consumers heeding safety warnings is their perception that magnet products present a low safety risk. Magnets in products intended for amusement or jewelry are likely to appear simple, familiar, and non-threatening to children, teens, and caregivers. Incident data and consumer reviews for subject magnet products demonstrate that consumers commonly view these types of magnetic products as suitable playthings for children, which undermines the perceived credibility of warnings that state the magnets are hazardous for children. The availability of children's toys that are similar to subject magnet products intended for users 14 years and older may also affect consumers' perception of the hazard because the products appear similar, and some are marketed for children. Once familiar with a product, consumers tend to generalize across similar products, and the more familiar consumers are with a product, the less likely they are to look for, or read, warnings and instructions. If caregivers observe their child, or their child's peers using a product or a similar product without incident, caregivers may conclude that their child can use the product safely, regardless of what the warnings state. This is also true of recommendations from others, including online reviews of products, which can influence the likelihood of consumers disregarding warnings. CPSC reviewed numerous consumer reviews of subject magnet products and found that many indicated that consumers purchased the product for a child, or that their children started playing with it, despite the product not being intended for users under 14 years old. Similarly, when a child or teen repeatedly uses the product in or around their mouth, without ingesting a magnet or experiencing consequences from ingestion, they and their caregivers are likely to conclude that the hazard is unlikely to occur or is irrelevant for them.

Another reason that safety messaging has limited effectiveness is that consumers misunderstand the hazard. For small, powerful magnets, the internal interaction hazard is a hidden hazard, so consumers are unlikely to anticipate and appreciate the risk to children, especially older children and teens who do not have a history of mouthing or ingesting inedible objects. However, of the magnet ingestion cases that identify whether the ingestions were intentional or accidental, the majority describe accidental ingestions, which is much more difficult for consumers to appreciate and prevent.

Similarly, there are developmental factors that predispose older children and teens to disregard warnings and use the small, powerful magnet products in and around their mouths and noses. Experimentation and peer influence are common determinants of behavior for this age group. Small, powerful magnets offer a seemingly safe and reversible way to try out lip, tongue, cheek, and nose piercings; and if children and teens see their peers doing this, they may act similarly, despite being aware of the risks.

In addition, consumers misunderstand the progression of symptoms associated with magnet ingestions, which also may lead them to disregard warnings. As incident reports show, many children, teens, and caregivers assume erroneously that, when ingested, magnets will pass through the body and exit the body without causing harm.

Another factor that limits the potential effectiveness of safety messaging is how children and teens obtain magnets they ingest. As incident data show, children and teens commonly obtain magnets loose in their environments, from friends, or at school, where the product is separated from any packaging or instructions that bear warnings. Because small, powerful magnets are too small themselves to carry warnings, these children and teens, and their caregivers, may not be alerted to the hazard.

Indeed, to date, safety messaging has been ineffective at reducing the magnet ingestion hazard. CPSC staff has examined dozens of incident reports that indicate children and teens obtained and ingested small, powerful magnets, even when the product was marketed and prominently labeled with warnings about the hazard and state that the product was not appropriate for children. For example, of the CPSRMS incidents that reportedly occurred between January 1, 2010, and December 31, 2021, at least 68 incident products had magnet internal interaction warnings, at least 74 had age labels or warnings indicating the product was not for children, and at least 66 had both types of relevant safety messages. In contrast, reports for only 14 incidents (total for both data sets) mentioned that the product had neither magnet internal interaction warnings nor age labels or warnings against use by children.

Another indication of the ineffectiveness of safety messaging to address the magnet ingestion hazard is the upward trend in magnet ingestion cases in recent years, despite years of consumer awareness campaigns. For many years, CPSC has drawn attention to the magnet ingestion hazard through recalls, safety alerts, public safety bulletins, and rulemaking activity. In addition, there have been numerous public outreach efforts by health organizations and other consumer advocacy groups to warn consumers about the internal interaction hazard posed by small, powerful magnets. Despite these efforts, magnet ingestion incidents have increased in recent years.

b. Packaging. Similar to safety messaging, there are several reasons CPSC considers packaging requirements inadequate to address the magnet ingestion hazard. Incident data show that children and teens commonly access magnets loose in their environment and from friends, in which case the product is likely to be separated from its packaging, rendering CR packaging or visual cues that all magnets are in the package ineffective.

In addition, the features included in ASTM F3458–21 to make the packaging difficult for children to open would not be effective in preventing older children and teens from accessing the magnets in the packaging and ingesting them. For example, an option provided in the standard allows the packaging to meet the requirements in 16 CFR 1700.15 and 1700.20. Those provisions are intended to make packaging significantly difficult for children under 5 years old to open within a reasonable time. Thus, such packaging does not prevent all children under 5 years old from opening it, particularly if given ample time; and it is not intended to prevent any children 5 years and older from opening the packaging. As the incident data indicate, most magnet ingestion incidents involve victims 5 years and older, making this packaging ineffective at restricting their access. Similarly, for the alternative packaging options in the standard, children and teens are likely to have cognitive and motor skills sufficient to access the products.

Even if CR packaging features did prevent children and teens from opening the packaging, the effectiveness

of packaging to address the hazard would rely on consumers correctly repackaging all the magnets after and every use, which is likely unrealistic. The products often are intended for purposes that make repackaging after each use unlikely. For example, products like magnet sets are intended to assemble and display complex sculptures, and some jewelry may involve creating designs, making it unlikely consumers will disassemble their designs to repackage all the magnets after every use. In addition, consumers are not likely to perceive the products as hazardous because they are intended for amusement or jewelry and are not hazardous in appearance. Therefore, consumers would not consider it necessary to repackage all the magnets after every use. Even for products that are obviously hazardous and commonly use CR packaging, such as chemicals and pharmaceuticals, consumers may not use the packaging consistently. Consumers may also consider CR packaging a nuisance, making it unlikely for them to store magnets in the packaging after every use.

In addition, the small size and large number of magnets (particularly in some magnet sets and magnetic jewelry sets) make locating and counting the magnets after every use not feasible or realistic, leaving it difficult to impossible to ensure all the magnets in the set are returned to the package. For example, staff has identified products that were involved in magnet ingestion incidents that consisted of thousands of 2.5 mm diameter magnets. Staff has found that it is not uncommon for magnets to be flicked away from one another or dropped when consumers handle or try to separate them. These actions are foreseeable, particularly for magnets intended for fidgeting and building. In examining magnet sets, staff found that many sets are sold with extra pieces, in part, because losing magnets is expected. In addition, many incident reports and consumer reviews of magnet sets mention lost magnets. Given the large number of magnets included in some sets, plus their small size, and the tendency for them to be separated and lost, it is unlikely that CR packaging will be used effectively by consumers. The time and effort necessary to locate, assemble, and repackage such small and numerous magnets is likely to be beyond what consumers are willing to spend.

E. EN 71–1: 2014

The European standard applies to children's toys, which are products intended for use in play by children younger than 14 years old. The requirements regarding magnets in EN 71–1: 2014 are essentially the same as in ASTM F963–17—any loose as-received magnet and magnetic component must either have a flux index less than 50 kG^2 mm^2, or not fit entirely in the small parts cylinder. The flux index is determined using the same method as in ASTM F963–17, and the small parts cylinder is the same as in ASTM F963–17. EN 71–1: 2014 also requires similar use-and-abuse testing as ASTM F963–17, to ensure that toys do not liberate a hazardous magnet or hazardous magnetic component. The standard includes a similar exemption to ASTM F963–17 for magnetic/electrical experimental sets intended for children 8 years of age and older, which need only bear a warning regarding the magnet ingestion hazard.

As discussed above in section V.A. of the preamble, for ASTM F963–17, CPSC assesses that these provisions do not adequately reduce the risk of injury and death associated with magnet ingestions because of the limited scope of the standard. Because the standard only applies to toys intended for children under 14 years old, it does not impose any requirements on products intended for older users, or products that would not be considered playthings. As the incident data indicate, magnet ingestion incidents include children and teens ingesting products intended for older users, and ingesting jewelry, neither of which this standard addresses.

F. ISO 8124–1: 2018

This standard applies to toys, which are products intended for use in play by children under 14 years old. The standard requires any loose as-received magnet and magnetic component to either have a flux index less than 50 kG^2 mm^2 or not fit entirely within the small parts cylinder. The flux index is determined the same way as in ASTM F963–17, and the small parts cylinder is the same as in ASTM F963–17. ISO 8124–1 also requires similar use-and-abuse testing as ASTM F963–17, to ensure that a hazardous magnet or hazardous magnetic component does not liberate from a toy. Similar to ASTM F963–17, ISO 8124–1 also provides an exemption for magnetic/electrical experimental sets intended for children 8 years and older, which need only bear a warning regarding the magnet ingestion hazard.

Thus, the provisions addressing the magnet ingestion hazard in ISO 8124–1: 2018 are largely the same as in ASTM F963–17. Because the standard only applies to toys intended for children under 14 years old, it does not impose any requirements on products intended for older users, or on products that would not be considered playthings. As the incident data indicate, magnet ingestion incidents include children and teens ingesting products intended for older users and ingesting jewelry, neither of which this standard addresses.

G. Compliance With Existing Standards

CPSC has limited information about the extent to which products comply with existing standards. Based on staff's analysis, only a small number of magnet ingestion incidents for which a product type could be identified involved children's toys subject to ASTM F963–17. This provides some indication that children's toys commonly comply with the standard. Of the magnet ingestion incidents that involved children's toys, staff identified only 7 incidents that involved internal interaction of the magnets through body tissue, again showing there may be a high level of compliance with the standard requiring flux index below 50 kG^2 mm^2. (None of the products in these seven incidents complied with the magnet requirements in ASTM F963.)

CPSC also does not have detailed information about the extent to which products comply with ASTM F2923, F2999, or F3458. Incident reports commonly do not provide enough detail to identify the specific product (*e.g.,* brand) to obtain it and assess it for compliance. In addition, for ASTM F3458, the standard was adopted recently (March 2021), making it difficult to assess the level of compliance with it. However, for the reasons discussed in this section, the Commission finds that none of the existing standards would adequately address the unreasonable risk of injury associated with subject magnet products.

H. Consideration of the Existing Standards, Collectively

For the same reasons than no existing standard is individually adequate, the standards collectively fail to adequately reduce the magnet ingestion hazard. As explained above, each standard contains critical inadequacies with regard to protecting against ingestion hazards associated with the particular products that are covered. Furthermore, there are subject magnet products, such as magnets sets, or magnet toys, or jewelry kits intended for users 14 years of age and older, and jewelry (both children and adult), that are not within the scope of the existing standards. Accordingly, even industry compliance with *all* the existing standards, were it achieved,

would not adequately address the ingestion hazard.

VI. Response to Comments on the Proposed Rule

This section summarizes the issues raised by comments, both oral and written, on the proposed rule, and it provides the Commission's responses to those comments.

A. Oral Presentations

On May 2, 2022, the Commission provided the public an opportunity to present views on the proposed rule in person before the Commission. Oral comments were presented at the hearing from representatives from the American Academy of Pediatrics, North American Society for Pediatric Gastroenterology, Hepatology and Nutrition, Kids in Danger, Consumer Federation of American, and Consumer Reports. These commenters provided testimony supporting the CPSC's rulemaking for a safety standard to address the unreasonable risk of injury and death associated with ingestion of loose or separable high-powered magnets. The commenters orally testified that there is overwhelming evidence of the significant hazards associated with magnets that have a flux of 50 or greater. Commenters testified on the serious medical consequences when children ingest hazardous magnets, including gastrointestinal perforations, abdominal abscesses, fistulas in the bowel, and death. Commenters also testified testimony regarding the ineffectiveness of regulatory alternatives, including safety messaging, labeling, and packaging requirements. Commenters recommended that the Commission not rely on child-resistant containers, bittering agents, or other attempts to deter children, but rather, they asked CPSC to mandate a standard that will eliminate the hazard. Specific oral comments that covered the same issues as the written comments are addressed below in section VI.B. of the preamble.

B. Written Comments

The preamble to the NPR invited comments concerning all aspects of the proposed rule. We received written comments from more than 700 commenters in response to the NPR. The Commission reviewed and considered several late comments that were filed regarding this rule.[13] Many of the comments contained more than one issue, and many of the comments addressed the same or similar issues. Thus, we organized our responses by issue. All of the comments can be viewed at: *www.regulations.gov,* by searching under the docket number for this rulemaking, CPSC–2021–0037.

In general, most who commented in favor of the proposed rule were medical professionals and/or representatives of consumer advocacy groups and medical associations;[14] there were also some individual consumers, and a subject magnet product manufacturer, Retrospective Goods, LLC, who also generally supported the proposed rule. These commenters argued that safety messaging and safeguards are insufficient to address the magnet ingestion hazard and that the proposed rule represents a minimum standard for addressing the hazard. In contrast, most who commented in opposition to the proposed rule were individual consumers, along with several subject magnet product manufacturers and hobbyist groups.[15]

Commission Authority

(Comment 1) Commenters in favor of the proposed rule opined that it is the Commission's authority and responsibility to address the ingestion hazard posed by the subject magnet products. These commenters encouraged the Commission to promulgate the final rule expeditiously as a minimum standard to address the hazard. Some commenters opined that the rule violates consumers' constitutional rights, including the right to freedom of expression through purchasing products they desire, and that a rule that prohibits the sale of covered magnet sets is drastically out of proportion to the risks presented by the product. Many commenters requested alternative regulatory actions to address the hazard, such as limiting sales for online purchases with restrictions, such as warnings; prohibiting sales to users under specified ages; requiring identification or adult signature for purchases; restricting sales of magnets by certain manufacturers or sellers; or restricting sales to certain stores or locations.

(Response 1) Section 7 of the CPSA authorizes the Commission to promulgate consumer product safety standards as performance requirements or that require products to be marked or accompanied by clear and adequate warnings and instructions. The requirements of a standard issued under this provision must be reasonably necessary to prevent or reduce an unreasonable risk of injury associated with the product. Determining whether a product presents an unreasonable risk of injury requires the Commission to consider, among other factors, the costs and benefits of regulatory action. The regulatory analysis discusses that assessment (see section VIII. of this preamble). The Commission must balance several factors, such as the severity of injury, the likelihood of injury, and the possible harm the regulation could impose on manufacturers and consumers.

Although some consumers assert that their constitutional rights are impacted, there is no constitutional right to purchase an unreasonably dangerous product. Some commenters suggest that the way to address the hazard of children ingesting magnets from subject magnet products might be to limit the manner or places where products are sold. The CPSA authorizes the Commission to issue standards that specify performance requirements or requirements for labeling and/or instructions. *See* 15 U.S.C. 2056. Sales restrictions do not fit within either of those categories. Furthermore, sales limitations or requirements for strong warning restrictions are unlikely to reduce ingestions significantly, because, as discussed in detail in section V.D.7 of the preamble, the Commission has determined that consumers are unlikely to heed safety warnings if they perceive the product to be low risk or they misunderstand the hazard and the associated health consequences of ingestion. Moreover, both children and teens can access magnets of subject magnet products from many sources other than stores. As the incident data indicate, magnet ingestion incidents associated with subject magnet products include children and teens who ingested magnets from products intended for older users.

(Comment 2) A few commenters stated that there was insufficient time to consider the NPR and urged that the final rule should be delayed until more information is obtained.

(Response 2) The Commission has provided stakeholders with sufficient time to consider and comment on the proposed rule. The NPR was published in the **Federal Register** on January 10,

[13] CPSC received late-filed comments in support of the proposed rule from the American Academy of Pediatrics (AAP), and the North American Society for Pediatric Gastroenterology, Hepatology and Nutrition (NASPGHAN). Retrospective Goods, LLC, also submitted a late comment. Shihan Qu also submitted a petition via: *www.change.org.* These comments were added to the docket on *www.regulations.gov.*

[14] For example, CPSC received a joint letter in support of the proposed rule by AAP and NASPGHAN.

[15] For example, CPSC received a letter in opposition to the proposed rule, which was submitted by the Hobby Manufacturers Association, representing more than 59 manufacturers, importers, publishers, producers, and suppliers of hobby products and hobby accessories.

2022, and the public comment period ended on March 28, 2022. Although a few commenters requested that the CPSC delay the final rule until more information is obtained, CPSC has determined that the risk of injury associated with subject magnet product ingestions increases when there is no mandatory rule addressing the hazard. In particular, as already explained, during the years when the 2014 magnet sets rule was announced and in effect (2014–2016), there were appreciably fewer magnet ingestions, compared with the earlier and more recent periods. The years 2017 through 2021 saw an uptick in the number of in-scope magnet ingestions, with 2021 having more incidents than most of the preceding years. Waiting for additional data sources to become available before taking effective action would result in more magnet ingestion injuries that likely could be preventable with promulgation of the final rule.

(Comment 3) Nano Magnetics, a manufacturer of subject magnet products, asserted that CPSC has refused to communicate with manufacturers, consumers, and representative beneficiaries of the subject magnet products regarding methods to address the magnet ingestion hazard, but communicated with organizations and advocacy groups in favor of the proposed restrictions.

(*Response 3*) The CPSC provided opportunities for all stakeholders to present their views in the oral hearing, and in the NPR, we invited written comments including any opposing views, which the Commission reviewed and considered in adopting this rule.

Lack of Product Defect

(Comment 4)—Numerous commenters asserted that magnet sets pose no risk of injury when used properly, that they function as intended, and therefore, they are not defective. Other commenters argued that the Commission has no authority to issue a rule that would result in a prohibition of all subject magnet products currently on the market simply because certain consumers use magnets in a manner that is inconsistent with the purpose intended for the product. The commenters argued that the improper use of a product by a minority of consumers does not render the product defective and does not warrant promulgating a rule that would remove the product from the market.

(Response 4)—To promulgate a consumer product safety standard, the Commission must find that the rule is reasonably necessary to reduce an unreasonable risk of injury associated with the product. A product may present an unreasonable risk of injury, even if the product does not contain a fault, flaw, or irregularity that impacts the manner in which the product functions. If evidence demonstrates that foreseeable misuse of a product results in an unreasonable risk of injury, the Commission has the authority to promulgate a rule reasonably necessary to reduce or eliminate that risk. When assessing risk, CPSC considers how consumers may actually use a product, not just the manner of use intended by the manufacturer. For example, the Commission's cigarette lighter standard requires disposable and novelty lighters to meet child-resistance requirements to protect against the misuse of lighters by children. 16 CFR part 1210. Similarly, the Commission's lawn mower standard includes requirements to guard against consumers intentionally removing a shielding safety device from the mower. 16 CFR part 1205. *See Southland Mower* v. *Consumer Product Safety Commission,* 619 F.2d 499, 513 (5th Cir. 1980) (reviewing the Commission's lawn mower standard, the court stated: ''Congress intended for injuries resulting from foreseeable misuse of a product to be counted in assessing risk'').

For this rule, CPSC has analyzed the magnet ingestion incident data and reviewed the various methods to address the hazard. CPSC determines that the subject magnet products carry the highest ingestion risk for children and teens. As detailed in section V.D.7, of the preamble, CPSC explained that consumers are likely to have a common perception of low risk pertaining to the subject magnet products and often misunderstand the magnet ingestion hazard. Safety messaging, including public awareness-raising efforts, has been insufficient to protect children and teens from the hazard. Due to factors like the inability of caregivers to provide constant supervision and manage common sources of access to hazardous magnets, consumers may be unable to avoid the hazard even if they are aware of the hazard and are actively trying to prevent it. After considering various methods by which to address the hazard, including safety messaging (*e.g.,* warnings, instructional literature, marketing, and public awareness-raising efforts) and safeguards (*e.g.,* CR packaging and aversive agents), the Commission concludes that mandating performance requirements is necessary to adequately address the hazard.

Risk and Severity of Injury

(*Comment 5)* Medical professionals and consumer advocacy groups were largely supportive of the proposed rule as a minimum standard to adequately protect children from subject magnet products. Many cited the most current literature on magnet exposure in children (discussed in section IV of the preamble), and others cited firsthand professional accounts of treating high-powered magnet exposures in children and associated medical outcomes from those injuries. AAP [16] and the NASPGHAN [17] expressed strong support for the proposed rule. In their comments, they highlighted the current medical recommendation for prompt medical intervention. The Canadian Paediatric Society's Injury Prevention Committee, Children's Safety Network (CSN) at Education Development Center (EDC), and the Pacific Institute for Research and Evaluation (PIRE) also provided comments in support of the proposed rule. Additionally, a number of medical professionals offered individual comments in favor of the proposed rule. These commenters stated that magnets, in general, present a unique health risk because some level of medical management is warranted for all magnet ingestions; magnets that have migrated past the esophagus routinely require serial imaging and surgical intervention; and children are suffering adverse health outcomes from magnet internal interaction hazards.

(*Response 5)* The Commission agrees that the magnet ingestion data and most current scientific literature related to magnet ingestion show that magnet internal interaction hazard and the associated injury mechanism continue to pose serious and long-lasting adverse health outcomes.

(Comment 6) Several individual commenters stated that the subject magnet products are rarely involved in magnet ingestion incidents. These commenters were typically individual consumers who claimed that there have been only a ''few,'' ''several,'' or a ''handful of'' injuries, based on outdated magnet ingestion data.

(Response 6) Contrary to these commenters' assertions, magnet ingestions are common and have increased in recent years. The Commission estimates that 26,600 magnet ingestions were treated in hospital EDs from January 1, 2010,

[16] AAP represents 67,000 primary care pediatricians, pediatric medical subspecialists, and pediatric surgical specialists dedicated to the health, safety, and well-being of infants, children, adolescents, and young adults.

[17] NASPGHAN represents more than 2,500 pediatric gastroenterologists in the United States, Canada, and Mexico and is the only organization singularly dedicated to advocating for children with gastrointestinal disease.

through December 31, 2021; this represents an estimated 25,000 ingestions, excluding out-of-scope products. An estimated 2,500 ED-treated ingestions of magnets from in-scope products occurred in 2021, higher than the majority of the preceding years, including 2018 through 2020. An estimated 5,000 (20% of 25,000) victims were hospitalized or transferred to another hospital due to incidents that occurred in the period from 2010 through 2021. These estimates are based on the NEISS reports, which capture only brief, medically-focused narratives from the ED visit. Therefore, the estimates do not account for the victims who were initially released and later sought medical attention for magnet-related injuries, including treatment for complications arising from medical management.

In examining CPSRMS data from this 12-year period, CPSC found that at least 167 CPSRMS-reported magnet ingestions resulted in surgery (including 43 incidents since the NPR), such as laparoscopy, laparotomy, appendectomy, cecostomy, enterotomy, colostomy, cecectomy, gastrotomy, jejunostomy, resection, and transplant, among others. Some injuries also resulted in direct hospital admissions, bypassing hospital EDs entirely. CPSC estimates the number of subject magnet product injuries treated outside of hospital EDs with CPSC's Injury Cost Model (ICM), which uses empirical relationships between the characteristics of injuries (diagnosis and body part) and victims (age and sex) initially treated in hospital EDs and the characteristics of those treated initially in other settings. Using the time period during 2017 through 2021, based on the NEISS annual estimate of about 481 magnet injuries initially treated in hospital EDs involving magnets identified as amusement/jewelry products, there were 320 injuries that were treated and released and 161 injuries that required hospitalization. Based on estimates from the ICM, 185 injuries were treated outside of hospitals annually and another 78 injuries resulted in direct hospital admission.

(Comment 7) Several commenters, including Kids in Danger and Consumer Reports, requested that CPSC continue to conduct research after the final rule to determine if the excluded products, such as magnet products sold to school educators for educational purposes, should also be addressed.

(*Response 7)* The Commission will continue to assess any new incident data and review the adequacy of the rule in addressing magnet ingestion hazards on an ongoing basis, and CPSC staff will continue to work with the relevant standards groups on magnet ingestion hazards.

Other Approaches To Addressing the Hazard

(Comment 8) Safety Messaging—Several commenters in support of the proposed rule, including AAP and NASPGHAN, contend that the magnet internal interaction hazard cannot adequately be addressed with warnings, instructions, awareness-raising efforts, and other forms of safety messaging. The commenters explained that children, teens, and caregivers do not fully comprehend the hazard and risk of children and teens ingesting magnets.

One commenter, Independent Safety Consulting, LLC, stated that warnings will not be necessary in combination with the proposed size and strength limitations and may contribute to the growing issue of warning fatigue due to the prevalence of product warnings. Other individual commenters opposing the proposed rule argued that approaches involving safety messaging are more appropriate than strength and size limitations. These commenters stated that the CPSC should require warning labels only for certain products, require specific warnings and instructions, such as age restrictions, and limit sales and marketing of such products to specific physical stores or online.

Numerous individual commenters argued that approaches involving safety messaging and warnings are more appropriate than strength and size limitations. The majority of these commenters stated that their personal freedoms should not be restricted because some consumers, particularly parents, are irresponsible and do not supervise their children. Several individual commenters asserted that some brands of subject magnet products already have clear warnings about the hazard and market the products only to adults, asserting that these products have been involved in few-to-no magnet ingestion injuries. Most who oppose the proposed rule requested that adult products be excluded from the scope of the rule. They compared the magnet internal interaction hazard to other common hazards, like incidents with trampolines, fireworks, scissors, knives, firearms, balloons, and toys with small parts, arguing that these other products present similar or worse hazards but they are not banned. In addition, they argued that there are other, more hazardous products on the market for adults to purchase and use (*e.g.,* guns and cigarettes).

(Response 8) CPSC's assessment of the magnet internal interaction hazard shows that it is a unique, hidden hazard, unlike common and more readily apparent hazards, like hazards from trampolines and fireworks. The hazards identified in the rule involving multi-magnet ingestions and ingestions of both a magnet and a potentially ferromagnetic object, all call for some level of medical management. It is foreseeable that consumers will not anticipate, nor appreciate, the likelihood of children and teens ingesting magnets. The majority of the incident reports for the subject magnet products involved victims above the ages typically associated with ingestion of small objects (under 3 years old) and hazardous substances (under 5 years old). CPSC finds that it is unrealistic to expect parental supervision at all times, especially for these older ages, and ingestions can be quick and difficult to notice and prevent, considering the small size and sometimes large number of magnets in the subject magnet products. Many of the reports indicated that the magnets were ingested accidentally, while children and teens were attempting to separate the magnets with their teeth or were using the magnets to simulate oral piercings. Relatively few reports indicated the magnets were ingested intentionally.

As discussed in detail in section V.D.7. of the preamble, the Commission has determined that safety messaging has limited effectiveness for preventing the magnet ingestion hazard. In general, safety messaging relies on encouraging consumers to avoid hazards, as opposed to eliminating the hazards by design. For safety messaging to be effective, it must be seen, read, understood, and heeded. Specific to the subject magnet products, there are many obstacles to the success of safety messaging, which include, consumers commonly misperceive risk associated with the hazard; the hazard patterns and symptomology are often misunderstood; and the common sources of access to magnets (*e.g.,* children and teens sharing magnets when outside the home) make it difficult, if not impossible, for caregivers to prevent access to the hazard and likewise, reduce the chances of children and their caregivers seeing safety messaging provided with the products. Caregivers may also forego reading warnings if they think they already know the hazard. Magnet ingestions have continued an upward trend over the past years since the CPSC's 2014 magnets sets rule was vacated, despite increased prevalence of safety messaging provided with the

products, and numerous public outreach efforts by the CPSC, medical associations, consumer advocacy groups, and news sources.

(Comment 9) Packaging and Aversive Agents — Commenters who favor the proposed rule, such as Kids in Danger and Consumer Reports, opined that the magnet internal interaction hazard cannot adequately be addressed with packaging requirements. They explained that it is common for children and teens to acquire magnets without packaging, and that packaging requirements, such as child-resistant (CR) packaging, are only effective as long as the packaging is retained and used consistently to store the product. These commenters note that CR packaging would not be effective for the majority of victims, considering the victims' ages. Several individual commenters who are against the proposed rule opined that, to the contrary, approaches involving packaging and aversive agents are more appropriate than strength and size limitations.

(Response 9) The Commission has determined that safeguards, such as special packaging and aversive agents, are ineffective at addressing the magnet internal interaction hazard. As discussed in detail in section V.D.7 of the preamble, in many cases, the magnets do not come with their original packaging, making packaging features bearing warning language immaterial (*e.g.,* when children and teens find magnets in their environment or receive them from friends). CR features, such as those specified in ASTM F3458–21, are designed to limit access to products by children under 5 years of age only, and CPSC found that the majority of magnet ingestion incidents involved victims ages 5 years and older. Furthermore, CR features would be effective for these younger ages only if the magnets are repackaged correctly and in their entirety after every use, which CPSC finds unrealistic, as explained above. Incident reports and customer reviews further demonstrate that it is common to lose magnets from the subject magnet products, particularly from products with numerous magnets (*e.g.,* magnet sets with hundreds to thousands of tiny magnets).

Similarly, deterrents, such as aversive agents (*e.g.,* foul odors or bitterants), are unlikely to be effective. Serious injury is possible when one ingests as few as two magnets, or even a single magnet in the presence of a ferromagnetic object; in addition, children may ingest multiple magnets before they detect the aversive agent. Children frequently ingest unpalatable substances, which indicates that foul odors and tastes are not sufficient to deter children from ingesting harmful substances.

Reliance on ASTM standards

(Comment 10) Numerous commenters, including Shihan Qu of Zen Magnets, LLC, and Hobby Manufacturers Association, recommended publicizing and enforcing ASTM F3458—21, which includes warning, instructional literature, marketing, and packaging requirements for adult magnet sets. Commenters claimed that the combination of requirements for warnings, instructions, marketing, and packaging is sufficient to address the hazard. Additionally, one commenter, Retrospective Goods, LLC, a subject magnet product manufacturer, stated that CPSC has not undertaken any meaningful safety campaigns regarding the hazard for 7 years.

(Response 10) The Commission has concluded that the requirements specified in ASTM F3458–21 are inadequate to address the magnet internal interaction hazard without size and strength requirements. Section V.D.7. of the preamble explains that warning, instructional literature, marketing, and packaging requirements for adult magnet sets do not address the hazard because the incident data indicates that children and teens commonly access and ingest magnets from products intended for older users. Clear and repeated safety messaging and marketing have been insufficient to discourage magnet ingestion, and CR packaging is unlikely to address the hazard, particularly given that most of the known magnet ingestions have involved victims ages 5 years and older.

Contrary to the assertion that CPSC has not engaged in safety campaigns, CPSC, in addition to raising awareness of the magnet ingestion hazard through publicized recalls, has drawn attention to the hazard through safety alerts and public safety bulletins. CPSC maintains a ''Magnets Information Center'' website,[18] which provides an informational video, a description of the hazard, what steps to take when magnets are swallowed, and links to recalls, relevant CPSC materials, applicable regulations, and informational posters. CPSC also issued a safety alert about the magnet ingestion hazard, which describes the hazard and what steps to take when magnets are swallowed. In addition to CPSC's information campaigns, health organizations and other consumer advocacy groups have made numerous public outreach efforts to warn consumers about the magnet ingestion hazard.[19] Some of the recent efforts include CPSC's annual holiday safety campaign,[20] CPSC's Twitter Chat on High-Powered Magnet Safety,[21] and numerous articles from popular news sources.[22]

Scope of the Rule

(Comment 11) Rely on Enforcement Action—Several commenters, including Magnet Safety Organization, opined that the CPSC enforcement actions, rather than rulemaking, is the appropriate approach. Other commenters, such as the Hobby Manufacturers Association, asserted that CPSC should focus enforcement activities only on manufacturers and importers that do not use clear marketing and warnings to explain the hazard and warn against use by children.

(Response 11) From January 1, 2010, through May 25, 2022, CPSC's Office of Compliance and Field Operations has investigated and recalled numerous magnet products involving the magnet internal interaction hazard. CPSC has conducted 20 recalls involving 25 firms/retailers, and totaling approximately 13,832,901 recalled units, including craft kits, desk toys, magnet sets, pencil cases, games, bicycle helmets, maps, and children's products among others. Of these 20 recalls, 10 involved products that would not be subject to the rule; specifically, 6 involved children's toys that are subject to the ASTM F963 Toy Standard. Although these 10 recalls did not apply to products that are subject to the rule, they illustrate the magnet ingestion hazard.

[18] Available at: *www.cpsc.gov/Safety-Education/Safety-Education-Centers/Magnets.*

[19] Examples include the American Academy of Pediatrics (*https://services.aap.org/en/search/?k=magnets);*North American Society for Pediatric Gastroenterology, Hepatology and Nutrition (*www.naspghan.org/content/72/en/Foreign-Body-Ingestion*); Consumer Reports (*www.consumerreports.org/product-safety/magnets-marketed-as-toys-could-be-dangerous-to-kids/*); Consumer Federation of America (*https://consumerfed.org/testimonial/cfa-comments-cpscs-notice-proposed-rulemaking-safety-standard-magnet-sets/*); and Kids In Danger (*https://kidsindanger.org/2011/11/cpsc-warns-about-high-powered-magnets/*).

[20] CPSC's Top Safety Tips for Early Holiday Shoppers Amid Reports of Expected Toy Shortage (2021): *www.cpsc.gov/Newsroom/News-Releases/2021/Top-Safety-Tips-for-Early-Holiday-Shoppers-Amid-Reports-of-Expected-Toy-Shortage.*

[21] On May 19, 2021, CPSC staff provided responses regarding magnet safety in a public Q&A.

[22] Examples of recent news articles addressing the hazard include the following, among others: *www.washingtonpost.com/business/2021/08/17/magnet-safety-recall/, www.washingtonpost.com/business/2019/12/27/senator-urges-regulators-take-action-magnet-ingestions/, www.cnn.com/2019/04/12/health/kids-swallow-objects-study/index.html,* and *www.foxnews.com/health/parts-of-boys-colon-intestines-removed-after-swallowing-toy-magnets-mom-says.*

Despite this active enforcement to remove from the market products that present a substantial product hazard, such efforts are necessarily limited to particular entities and products. By contrast, this rulemaking establishes requirements that all non-exempt subject magnet products must meet from the effective date of the rule. The magnitude of the hazard, the similarity of the ingestion hazard across the subject magnet products, and the relevant similarities of the products themselves, make the rulemaking approach appropriate here.

(Comment 12) Mental Stimulation Should Be Removed from Definition—Several commenters, including subject magnet product manufacturers Retrospective Goods, LLC, and Nano Magnetics, requested clarifications pertaining to the NPR's proposed product scope and exemptions, particularly regarding ''mental stimulation.'' These commenters recommended removing ''mental stimulation'' from the inclusion criteria for ''subject magnet product.'' Commenters also suggested that the final rule identify more of the exempted products, such as the products intended for scientific or technical research, and educational, professional, and industrial applications. Many individual commenters mentioned the artistic, educational, entertainment, social, and therapeutic benefits of small, powerful magnets in consumer products, such as magnet sets.

(Response 12) The NPR recommended exempting from the proposed rule, children's toys subject to the ASTM F963 Toy Standard, and the final rule retains that exemption because that standard is mandatory and adequately addresses the magnet ingestion hazard associated with children's toys. The NPR further noted: ''it is reasonable to exclude home/kitchen products from the proposed rule,'' and ''other products that would fall outside the scope of the proposed rule include research and educational products, or those intended for commercial or industrial purposes, if they are not also intended for amusement or jewelry.'' 87 FR 1291–92. The NPR specifically sought comment on whether ''home/kitchen magnets or education products should be addressed in the rule.'' *Id.* at 1312.

The Commission disagrees that ''mental stimulation'' should be removed from the definition of ''subject magnet products.'' Mental stimulation is an important criterion because it is an apt descriptor for subject magnet products that appeal to children and teens, including uses like puzzle working and sculpture building. However, the Commission agrees that the term ''mental stimulation'' may be interpreted more broadly than intended, by capturing products not for home uses that nonetheless may be mentally stimulating, such as products manufactured, sold, and/or distributed solely for educational uses at schools and universities. Accordingly, in response to comments, the final rule clarifies the definition of ''subject magnet product'' to mean a consumer product that is designed, marketed, or intended to be used for entertainment, jewelry (including children's jewelry), mental stimulation, stress relief, or a combination of these purposes, and that contains one or more loose or separable magnets, but does not include products sold and/or distributed solely to school educators, researchers, professionals, and/or commercial or industrial users exclusively for educational, research, professional, commercial, and/or industrial purposes.

This clarification addresses potential confusion between in-scope and out-of-scope products, by specifying in the definition certain products that are not subject to the final rule, even if the intended use of these products involves mental stimulation. These excluded products are intended to be sold and/or distributed solely to school educators, researchers, professionals, and/or commercial or industrial users exclusively for educational, research, professional, commercial, and/or industrial purposes. As shown in the incident data, these types of applications have not been associated with magnet ingestions, and would be less likely to pose an unreasonable risk of injury to children or teens since they would not be sold for or used in home settings and/or for personal use by children.

Products manufactured, sold, and/or distributed for use in the home, such as hardware magnets, that contain one or more loose or separable magnets but that are not designed, marketed, or intended to be used for entertainment, jewelry (including children's jewelry), mental stimulation, stress relief, or a combination of these purposes, would not be subject to the rule because they do not meet the definition of a ''subject magnet product.'' However, if any of these products are designed, marketed, or intended to be used, even in part, for entertainment, jewelry (including children's jewelry), mental stimulation, stress relief, or a combination of these purposes, such uses would cause the magnets to be subject to the requirements of the standard. Unlike magnet products sold and/or distributed solely to school educators, researchers, professionals, and/or commercial or industrial users exclusively for educational, research, professional, commercial, and/or industrial purposes, these products are used in the home, and if they have subject magnet product uses such as jewelry or mental stimulation, they may appeal to children or teens, and the magnet internal interaction hazard may pose the same unreasonable risk of injury to as identified for other subject magnet products.

(Comment 13) Noncompliant magnets should be widely available. Some commenters, including Nano Magnetics, contend that that use of small, aggregated magnetics have resulted in great scientific and medical innovations and that the proposed rule would prevent scientific breakthroughs.

(Response 13) The Commission is not persuaded that the final rule would adversely impact innovation in scientific or medical fields. The final rule clarifies the definition of *subject magnet product* to mean a consumer product that is designed, marketed, or intended to be used for entertainment, jewelry (including children's jewelry), mental stimulation, stress relief, or a combination of these purposes, and that contains one or more loose or separable magnets, but does not include products sold and/or distributed solely to school educators, researchers, professionals, and/or commercial or industrial users exclusively for educational, research, professional, commercial, and/or industrial purposes. Accordingly, uses for magnets such as scientific or medical research, as contemplated by the commenters, may continue under the revised definition.

(Comment 14) Some commenters, including individual consumers, stated that requiring magnets to be weaker or bigger would limit their beneficial uses, and the products with only one magnet should be excluded from the final rule. Other commenters asserted that magnets that are not spherical or disc-shaped should be excluded from the final rule.

(Response 14) The scope of the rule includes non-spherical and non-disc-shaped magnets because the hazard is not limited to these magnets only; for example, the Commission is aware of cases involving internal interaction of rock-shaped magnets. The product scope also includes products with only one magnet because subject magnet products may be sold per-magnet, and a single magnet can interact internally through body tissue with an unrelated magnet or ferromagnetic object.

ASTM F963 Test Method

(Comment 15) Commenters in favor of the proposed rule, including Safe Kids Worldwide, Consumers Union, AAP, and NASPHAN, generally supported incorporation of the ASTM F963 testing requirements as a minimum approach for addressing the magnet ingestion hazard. One manufacturer, Retrospective Goods, LLC, stated that the ASTM test method for measuring flux is widely used internationally and is well-understood; therefore, they assert, ''there is no need to change the current ASTM test procedure for measuring a magnet's flux.'' As an example, the commenter provided a method from an international test lab that describes a procedure for locating the pole of a small magnet. The procedure uses a magnet's attraction to a ferromagnetic bar to orient and identify the poles, and it uses an adhesive surface to hold the magnet during testing. The commenter questioned whether the CPSC test procedure provided in Tab D of the NPR has been tested by other laboratories and stated: ''changing the ASTM test procedure could lead to confusion and potentially uneven or conflicting results.''

(Response 15) CPSC staff developed a test procedure consistent with ASTM F963–17 to locate the magnet pole of small diameter magnets and to secure the magnet during the flux density measurement. This test procedure is provided for informative purposes and is not specified in the performance requirement. Therefore, testing of the procedure by other laboratories is not warranted. CPSC staff's procedure does not change the ASTM test procedure because there is no test procedure specified in ASTM F963–17 for locating the pole surface of a magnet; nor is there a test procedure for how to secure the magnet while measuring the maximum flux density. The exemplar method cited by the commenter for locating the pole of a small diameter magnet and holding the magnet during testing is similar in concept to the test method developed by CPSC staff.

(Comment 16) One commenter, Kids in Danger, supported the wider use-and-abuse testing from ASTM F963, to ensure products do not liberate magnets. A manufacturer, Retrospective Goods, LLC, conversely stated that ''no data has been presented that liberated magnets with a flux over 50 kG^2 mm^2 in adult products, which also meet the scope of the Rule, are posing a problem. Any such requirement should be supported by data.''

(Response 16) CPSC's review of magnet ingestion incident data has not identified a pattern of children ingesting hazardous magnets that liberated from products not subject to ASTM F963–17. However, CPSC will continue to monitor new incident data to assess if new patterns develop that indicate use-and-abuse testing is necessary for products that are outside the scope of ASTM F963–17.

(*Comment 17)* One trade association, Magnet Safety Association, stated that the measurement of flux was created by ASTM as high-level guidance for voluntary safety measures and ''was not designed to be used to determine whether magnets will present injury if ingested multiply.'' The commenter stated that the flux measurement in ASTM does not represent attractive force, and the ratings do not appropriately scale with the strength or shapes of magnets. Therefore, the commenter asserted that the Commission should use a measurement that is appropriately created for such usage and properly reviewed by experts.

(Response 17) The performance requirement in the final rule duplicates the ASTM F963–17 approach to addressing the magnet internal interaction hazard in children. The current ASTM test to determine flux index is a method that has been used by test laboratories to determine compliance with the toy standard and it is a method also used by other domestic and international standards for identifying hazardous magnets. The Commission has determined that the requirement effectively addresses magnet internal interaction hazard in toy products.

(Comment 18) One commenter, Joshua Pruett, suggested that a test method to measure the force applied to a membrane sandwiched between two magnets (presumably the attractive force of two magnets across body tissue) is an alternative that would be a closer analog to the hazard the agency wishes to prevent than the current method in ASTM F963–17, which measures a magnet's flux index.

(Response 18) The method proposed by the commenter is not a currently accepted test procedure, and it would not be reasonable because a specific attractive force between two magnets has not been correlated to tissue damage and severity of injury.

(Comment 19) Comments from Consumer Reports, Joshua Pruett, and Retrospective Goods, LLC, made statements regarding sampling requirements for testing magnets. Consumer Reports stated that, given the variation in flux strength across magnets due to variation in density, CPSC should require manufacturers to produce products that are consistent and uniform, adding that CPSC should require large sample sizes. Mr. Pruett suggested a representative sample consisting of 10 to 20 percent of the magnets in a set, but no less than 1 to 3 magnets per set, would provide robust test results. Retrospective Goods, LLC, stated that manufacturers should be allowed the flexibility to determine the appropriate sampling for their product. Retrospective Goods requested that the final rule include an acceptable tolerance range for magnets.

(Response 19) The performance requirement in the final rule duplicates the ASTM F963–17 approach to addressing the magnet internal interaction hazard for children. The final rule requires all loose magnets subject to the rule to be either too large for children to swallow, or, if they are small enough to be swallowed, to have a measured flux index under 50 kG^2 mm^2. The performance requirement does not impose production requirements on the manufacturer; and it is the manufacturer's responsibility to have processes in place to ensure each magnet produced will meet the proposed requirements. Manufacturers may choose sampling methods that are appropriate to their production setting and demonstrate confidence in complying with the proposed rule. Consistent with the ASTM F963–17 test method, and to prevent a hazard to children, a subject magnet product fails the proposed requirement if at least one magnet from the product has a magnetic flux index of 50 kG^2 mm^2 or greater.

(Comment 20) Numerous commenters opined on whether the proposed flux index limit is sufficient to address the magnet internal interaction hazard. Most supported the limit; however, several commenters, including Consumer Reports, stated that CPSC should continue to study whether magnets with flux indexes lower than 50 kG^2 mm^2 may also pose an unreasonable risk of injury to children, and should be brought within the scope of this rule at a later time. Additionally, Consumer Reports recommended that CPSC study whether larger magnets pose an unreasonable risk of injury.

(Response 20) The current ASTM test to measure flux index is the method accepted by domestic and international standards development bodies that has been used by test labs to determine compliance with ASTM F963, EN 71–1 and ISO 8124–1. CPSC's review indicates that the requirement effectively addresses the magnet internal interaction hazard in toy

products. Recall information further supports this conclusion. Recalls of children's toys involving the magnet ingestion hazard have declined substantially since the ASTM F963 Toy Standard took effect. ASTM F963 was announced as the mandatory standard for toys in 2008, and it took effect in 2009. From 2006 through 2009, CPSC issued more than a dozen recalls of children's toys, due to the ingestion hazard associated with loose or separable, small, powerful magnets. In contrast, from January 2010 through May 2022—a period approximately three times as long—there were a total of 20 recalls related to the magnet ingestion hazard, only six involving children's toys. Recalls provide some indication of the products involved in magnet ingestions, because products are recalled when they present a hazard. This marked decline in recalls of children's toys for magnet ingestion hazards indicates that children's toys largely comply with the ASTM F963 Toy Standard and are not involved in hazardous incidents. Although CPSC is currently not aware of demonstrable evidence indicating that magnets with a flux index below 50 kG^2 mm^2 are hazardous, CPSC staff will continue to review magnet ingestion incidents to assess whether magnets with flux indexes lower than 50 kG^2 mm^2 pose an unreasonable risk of injury. However, the Commission concludes that further study of whether larger magnets pose an unreasonable risk of ingestion injury is unwarranted at this time because the rule requires loose or separable magnets in the subject magnet products to have a flux index under 50 kG^2 mm^2 if the magnets are small enough to be ingested.

(Comment 21) Several commenters requested that, following promulgation of the final rule, the CPSC investigate whether, and to what extent, the number of magnets ingested affects the likelihood of internal interaction injuries. One manufacturer, Retrospective Goods, LLC, stated that there are no data showing that magnets in aggregate clumps increase the risk of internal interaction injury. This commenter explained that x-rays taken of ingestion incidents involving multiple magnets show that the pattern is limited to strings or rings of magnets.

(Response 21) The existing flux index method was developed to estimate the magnetic attraction force of individual conventional dipole magnets. Individual magnets stacked together with their magnetic poles aligned, or connected side-by-side, could potentially have a stronger flux index or otherwise be more difficult to separate than each individual magnet. A clump of magnets could be less powerful than an ordered aggregation, as the magnetic poles could overlap, interact, and counteract one another. CPSC's review of NEISS and CPSRMS-reported incidents did not show evidence demonstrating that internal interaction injuries occurred because of increased strength from magnets in aggregate.

(Comment 22) One manufacturer, Retrospective Goods, LLC, asserted that the flux index is not an accurate measurement of magnetic attractive force because magnets of different size, shape, and composition can have the same flux densities but different points of contact (convex surface likes spheres and cylinder ends have a single point of contact versus flat surfaces of disks) and/or different pole surface areas. The commenter stated the result is that magnets of different size and shape can have the same flux index but different attractive forces; therefore, the commenter claimed the flux index is an arbitrary way of measuring safety risk. However, the commenter also concluded that historical health data indicate that a flux index less than 50 kG^2mm^2 is an appropriate predictor of safety for all disk magnets and spherical magnets composed of neodymium; therefore, the commenter asserted the belief that the rule should be limited to disk- and sphere-shaped neodymium magnets.

(Response 22) The commenter's analysis of attractive force does not consider the area over which the force is dispersed when two magnets attract to apply pressure (force divided by area) on the pinched tissue; attractive force, by itself, is not the only factor to consider. The commenter also did not provide evidence, and CPSC is not aware of any, that correlates tissue damage to a specific magnetic attractive force over a specific area. The Commission proposed a performance requirement that duplicates the ASTM F963–17 approach to addressing the magnet internal interaction hazard in children. The current ASTM test to determine flux index is a method that has been used by test labs to determine compliance with the toy standard, and it is a method that is also used by other domestic and international standards for identifying hazardous magnets. CPSC's rationale for using the 50 kG^2mm^2 flux index is based on historical incident data indicating that the ASTM F963 requirement effectively addresses the magnet internal interaction hazard in toy products. In fact, the same commenter concluded that the proposed rule is effective for certain magnets, based on incident data, but the commenter did not provide an adequate rationale for excluding other magnets. Therefore, the commenter's analysis does not change our conclusion that loose or separable magnets in the subject magnet products should either be too large to fit in the small parts cylinder described in 16 CFR 1501.4, or they must have a flux index of less than 50 kG^2 mm^2, when tested in accordance with the procedures described in the ASTM F963–17.

Impacts on Businesses and Jobs

(Comment 23) Several individual commenters who are opposed to the proposed rule claim that U.S. companies will go out of business as a result of the rule.

(Response 23) In the initial regulatory flexibility analysis (IRFA), CPSC noted that a few small firms whose businesses focus on sales of magnet products that do not comply with the final rule, including some small firms selling products on their own websites, would face relatively greater losses in producer surplus (estimated to average about $5 to $10 per unit for magnet sets). 87 FR 1303. These and other small businesses could respond to the rule by undertaking measures, such as marketing or incorporating magnets that comply with the rule, or increase their marketing of products that do not have loose or separable hazardous magnets. Such measures could partially offset losses in producer surplus resulting from firms' inability to continue marketing noncomplying magnet products. A review of products currently offered by current or former sellers of products that would not meet the rule found that most of these current or former sellers also market products that either would comply with the rule or are not within the scope of the rule. One of the leading importers of magnet sets that recalled and stopped sales of the products in March 2022, still markets a variety of magnetic products that would comply with the final rule (if the product marketing is accurate regarding the size and strength of the loose or separable magnets). These facts indicate that sellers of magnet products subject to the rule should be able to remain in business, even if the rule becomes effective.

(Comment 24) The NPR proposed that the rule take effect 30 days following its publication in the **Federal Register**. CPSC sought comments on the advantages and disadvantages of a different effective date, including extending the period before the rule becomes effective. *Id.* at 1305. Retrospective Goods, LLC, a manufacturer of subject magnet

products, commented that a 30-day effective date would be workable for the firm if the rule is limited to size and strength requirements as proposed. However, the commenter asserted, if amendments change the flux index, the test method, or add additional tests or requirements, the firm, and likely other sellers, would need time to make those changes and a 90-day effective date would be more appropriate. This commenter also noted that the portion of the rule that regulates children's products requires that the Notice of Requirements (NOR) for the testing rule be amended, and the statute requires a 90-day effective date after that amendment. The commenter opined that it would make little sense, from a public safety standpoint, to have more stringent requirements for adult products than for children's products while the new rule is being fully implemented.

(Response 24) As noted in the IRFA, the alternatives to the proposed rule that the Commission considered included setting a longer period before the rule becomes effective. Although a later effective date could give firms additional time to develop complying products, or to shift marketing to nonmagnetic products, most current sellers of noncompliant subject magnet products already market other products that either comply with the rule or do not constitute subject magnet products. Furthermore, the NPR itself alerted sellers to the potential need to adjust their marketing focus. Given the facts and the nature of the market, a 30-day effective date for the final rule should not present significant hardships to small businesses. Additionally, the 30-day effective date is consistent with the requirements in section 9(g)(1) of the CPSC, which states: ''each consumer product safety rule shall specify the date such rule is to take effect,'' which generally ''shall be set at a date at least 30 days after the date of promulgation.'' 15 U.S.C. 2085(g)(1),

The NPR noted that certain subject magnet products would be considered children's products if they are ''designed or intended primarily for children 12 years of age or younger.'' For example, some jewelry items that are subject magnet products may be children's products, while others may not be. Accordingly, the NPR proposed to amend part 1112 to add a NOR to include procedures for accreditation of testing laboratories to test subject magnet products that are children's products for compliance with the new standard. Under section 14(a)(3), the testing and certificate requirements apply to any children's product manufactured more than 90 days after the Commission has established and published an NOR for accreditation of third party conformity assessment bodies to assess conformity with an applicable children's product safety rule.

Accordingly, although the effective date of the final rule for both children's and non-children's subject magnet products is 30 days after publication of the final rule, the effective date under 16 CFR part 1112 is 90 days after the publication of the final rule. All the subject magnet products must comply with the new standard, but for children's products, such as children's jewelry, that currently are not subject to the mandatory standard under ASTM F963–17, testing laboratories also must go through the process of applying for accreditation and obtain approval to become a CPSC-accepted third party conformity assessment body. Ninety days provides sufficient time for testing laboratories to apply for, and comply with, the CPSC's procedures.

Regulatory Analysis

(Comment 25) The Magnet Safety Organization (MSO) submitted comment on the preliminary regulatory analysis. MSO asserts that CPSC's economic analysis does not account for the variety of quantities in which sets are sold. MSO's proposed regulatory alternative would set a performance standard that requires a minimum quantity of small rare earth magnets per set.

(Response 25) CPSC's review of product offerings over the years shows that magnet sets with 216 to 224 spheres have been most common (and the commenter acknowledges this) in households. If magnet products (*i.e.,* magnet sets) contain large numbers of individual magnets, or have magnets with high mass or volume that would result in costs of the rule (in the form of lost consumer surplus and producer surplus) greater than the estimated value of benefits (in the form of reduced societal costs) per set, then significant price increases for hazardous magnet products might reduce—but not eliminate—future exposure to the unreasonably dangerous products. Additionally, the Commission must assess all of the costs and benefits of the rule to address the risk of injury associated with magnet ingestion from subject magnet products. The commenter's proposed regulatory alternative that would limit sales to a minimum number of magnets per set could greatly increase prices and result in lost consumer surplus for consumers who would prefer products with smaller numbers of magnets and lower prices. Loss of that segment of the market would also decrease the producer surplus for manufacturers and importers of the products.

(Comment 26) Regarding the NPR's cost/benefit analysis, MSO stated: ''According to the NPR, the range in Consumer surplus is equal to the annual magnet product sales, multiplied by the range of product price from $15 to $25. And the Producer surplus is curiously calculated with a fixed product price of $20, minus a variable cost between $10 and $15.'' MSO also claims that, based on the preliminary regulatory analysis's estimate of annual societal costs of $47.6 million, ''above 1,904,000 units of Annual Sales is when societal benefit exceeds societal cost.'' Furthermore, MSO claims: '' if the sales were comparable to 2009, 'the first year of significant sales, may have totaled about 2.7 million sets,' then societal benefit handily exceeds societal costs.''

(Response 26) The commenter's conclusions appear to be based on several misinterpretations of the preliminary regulatory analysis. In the absence of precise data on annual sales of hazardous magnet products, CPSC presented estimates of the costs of the rule in the form of lost consumer surplus and lost producer surplus for a wide range of annual sales. When the preliminary analysis was prepared, CPSC noted that, because the assumed range of annual sales is wide and likely includes the actual sales levels, it is reasonable to conclude that the costs of the proposed rule could range from about $5 million to $8.75 million (if sales amount to about 250,000 products annually), to about $20 million to $35 million (if sales amount to about 1 million products annually). CPSC's intent was to provide estimates of costs of the rule in a range of annual sales that would capture likely costs. For the final rule, CPSC determines that it is reasonable to assume that the costs of the rule could range from about $2 million to $3.5 million (if sales amount to about 100,000 products annually), to about $20 million to $35 million (if sales amount to about 1 million products annually).

MSO is incorrect regarding CPSC's analysis of the consumer/producer surplus. The $15 to $25 figure was the assumed consumer surplus per unit, not the assumed price range. CPSC presented the example in which consumers who purchased the noncomplying subject magnet products at an average price of $20 would have been willing to spend, on average, $35 to $45 per product (*i.e.,* an additional $15 to $25 per set).

In addition, MSO speculates on sales data that, if comparable to 2009, ''the first year of significant sales, may have totaled about 2.7 million sets.'' Contrary to MSO's assertions, the final regulatory analysis for the 2014 magnet sets rule was based on sales of about 800,000 sets annually during the 2009 to June 2012 period. MSO did not provide, and CPSC does not have, any information or basis for determining that annual sales of hazardous magnet products would approach the very high level of 2.7 million sets MSO tosses out. The NPR requested commenters to provide information on sales of subject magnet products, but commenters offered no additional information. 87 FR 1312.

(Comment 27) We received comments from MSO and the Hobby Manufacturers Association, among others, asserting that if the rule is passed, it will be ineffectual because previous CPSC corrective actions have pushed domestic suppliers of subject products out of CPSC's authority, and caused ''nearly all'' of these products to enter the U.S. from overseas.

(Response 27) The NPR's preliminary regulatory analysis noted that an unusual aspect of the market for the subject magnets is the ability of consumers to order magnets directly, mainly from suppliers located in China. However, not all hazardous magnet products are being sold by overseas sellers. In fact, a review of sellers on two major internet platforms in 2020 and 2021 found that most sellers were domestic. The numbers of hazardous magnet products directly imported from overseas sources under the mandatory rule that are not stopped through enforcement efforts, would likely comprise a small fraction of what total sales have been in recent years. The dramatic decline in magnet ingestion incidents during the period of the 2014 magnet sets rule supports this conclusion that the rule will be effective.

VII. Description of the Final Rule

The Commission is issuing a rule establishing a standard for subject magnet products. This section of the preamble describes the rule, including differences between the NPR's proposal and the final rule.

A. Scope, Purpose, Application, and Exemptions—§ 1262.1

Scope and purpose. This section of the rule states that the requirements of 16 CFR part 1262 are intended are intended to reduce or eliminate an unreasonable risk of death or injury to consumers who ingest one or more hazardous magnets from a subject magnet product that is designed, marketed, or intended to be used for entertainment, jewelry (including children's jewelry), mental stimulation, stress relief, or a combination of these purposes, and that contains one or more loose or separable magnets.

Application. Except as provided under the toy exemption, all subject magnet products that are manufactured after the effective date, are subject to the requirements of this part 1262. This section makes several editorial changes to the proposed rule. The language ''in the United States, or imported, on or'' has been deleted to reflect the statutory language of CPSA section 9(g)(1), which provides that a safety standard subject to that section shall be applicable to consumer products ''manufactured after the effective date.'' 15 U.S.C. 2058(g)(1). Another editorial change deletes the definition of ''consumer product.'' Because the statutory citation is provided for the definition of ''consumer product,'' 15 U.S.C. 2052(a)(1), a recitation of that definition is unnecessary.

Exemption. This section of the rule also provides an exemption from the requirements of new 16 CFR part 1262, specifically: Toys that are subject to 16 CFR part 1250, *Safety Standard Mandating ASTM F963 for Toys.* Because the ASTM F963 Toy Standard already includes requirements to adequately address the magnet ingestion hazard associated with children's toys, the final rule retains the exemption as proposed in the NPR.

B. Definitions—§ 1262.2

This section of the rule provides definitions for the terms ''hazardous magnet'' and ''subject magnet product.'' *Hazardous magnet* is defined as ''a magnet that fits entirely within the cylinder described in 16 CFR 1501.4 and that has a flux index of 50 kG^2 mm^2 or more when tested in accordance with the method described in this part 1262.'' In the NPR, *subject magnet product* was defined as a consumer product that is designed, marketed, or intended to be used for entertainment, jewelry (including children's jewelry), mental stimulation, stress relief, or a combination of these purposes, and that contains one or more loose or separable magnets. The final rule adds clarifying language to the definition of *subject magnet product,* as explained below.

In the NPR, the Commission specifically sought comment on products that might be excluded from the proposed rule, including magnets used for education, research, commercial, and industrial uses. 87 FR 1312. As discussed in section VI.B. of the preamble, several commenters, including magnet set manufacturers, requested clarifications pertaining to the product scope and exemptions, particularly regarding products that might meet the definition of ''mental stimulation.'' They asserted that ''mental stimulation'' should be removed from the inclusion criteria for ''subject magnet product'' because the rule otherwise would include products primarily intended for use in scientific, technical, and professional settings, as well as educational purposes. Commenters also requested that the final rule should identify more clearly the exempted products, such as products intended only for scientific or technical research, and educational, professional, and/or industrial applications.

In response to comments, the final rule clarifies that the definition of ''subject magnet product'' means a consumer product that is designed, marketed, or intended to be used for entertainment, jewelry (including children's jewelry), mental stimulation, stress relief, or a combination of these purposes, and that contains one or more loose or separable magnets, but does not include products sold and/or distributed solely to school educators, researchers, professionals, and/or commercial or industrial users exclusively for educational, research, professional, commercial, and/or industrial purposes.

C. Requirements—§ 1262.3

Each loose or separable magnet in a *subject magnet product,* if it fits entirely within the cylinder described in 16 CFR 1501.4, must have a flux index of less than 50 kG^2 mm^2 when tested in accordance with the test procedure for determining flux index. Based on the widespread and longstanding use of the flux index limit of 50 kG^2 mm^2, its development and acceptance by multiple stakeholders, the effectiveness of standards that have used this limit to address magnet ingestion incidents, and CPSC testing showing that some magnets involved in internal interaction incidents had flux indexes close to 50 kG^2 mm^2, the final rule requires that magnets that are small enough to ingest have a flux index of less than 50 kG^2 mm.

D. Test Procedure for Determining Flux Index—§ 1262.4

This section of the rule describes how to determine the flux index of subject product magnets. Under the final rule, each loose or separable magnet in a subject magnet product that fits entirely within the small parts cylinder

described in 16 CFR 1501.4 must have a flux index of less than 50 kG^2 mm^2 when tested in accordance with a prescribed method. In practice, the first step is to determine whether each loose or separable magnet in a subject magnet product fits in the small parts cylinder, and the second step is to determine what is its flux index.

The small parts cylinder is described and illustrated in 16 CFR part 1501.4. Figure 2, below, shows the illustration, including the dimensions of the cylinder provided in the regulation.

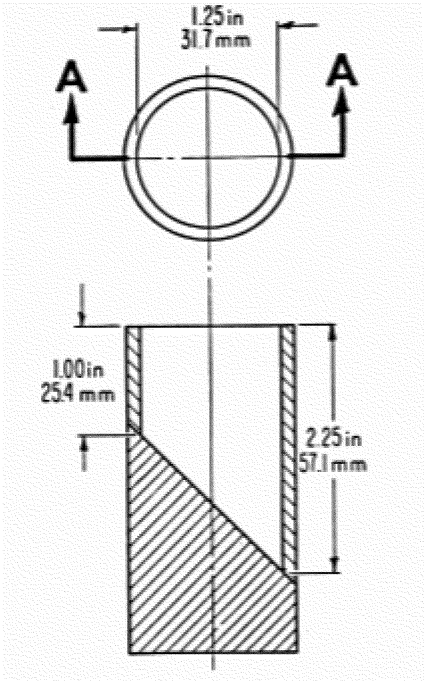

Figure 2: Small parts cylinder in 16 CFR 1501.4

If a magnet fits entirely within this cylinder, then its flux index must be less than 50 kG^2 mm^2.

To determine the flux index of a magnet, the final rule provides that at least one loose or separable magnet of each shape and size in the subject magnet product must have its flux index determined using the procedure in sections 8.25.1 through 8.25.3 of ASTM F963–17, which specify test equipment, measurements, the test method, and the calculation for determining flux index. The test requires a direct current field gauss meter with a resolution of 5 gauss (G) capable of determining the field with an accuracy of 1.5 percent or better and an axial probe with a specified active area diameter and a distance between the active area and probe tip. Using the meter, the probe tip is placed in contact with the pole surface of the magnet, the probe is kept perpendicular to the surface, and the probe is moved across the surface to find the maximum absolute flux density. The flux index, in kG^2 mm^2, is determined by multiplying the area of the pole surface (mm^2) of the magnet by the square of the maximum flux density (kG^2). The flux density must be less than 50 kG^2 mm^2 to comply with the final rule.

As detailed in the memorandum in Tab D of Staff's NPR briefing package and in Tab D of Staff's Final Rule briefing package, CPSC staff developed a test methodology that is consistent with the test methods specified in ASTM F963–17, to assist testing laboratories in improving the accuracy and consistency in measuring the maximum flux density and calculating the maximum flux index for small diameter magnets. This test procedure is not mandatory, but it is provided as an example of how to measure flux index of small spherical magnets less than 3 mm in diameter. This example test method is available in the Appendix to Tab D of Staff's Final Rule briefing package.

E. Findings—§ 1262.5

Section 9 of the CPSA requires the Commission to make certain findings when issuing a consumer product safety standard. Specifically, the Commission must consider and make findings about the degree and nature of the risk of injury; the number of consumer products subject to the rule; the need of the public for the rule and the probable effect on utility, cost, and availability of the product; and other means to achieve the objective of the rule, while minimizing the impact on competition, manufacturing, and commercial practices. The CPSA also requires the rule to be reasonably necessary to eliminate or reduce an unreasonable risk of injury associated with the product; and issuing the rule must be in the public interest. 15 U.S.C. 2058(f)(3).

In addition, the Commission must find that: (1) if an applicable voluntary standard has been adopted and implemented, compliance with the voluntary standard is not likely to adequately reduce the risk of injury, or compliance with the voluntary standard is not likely to be substantial; (2) the benefits expected from the regulation bear a reasonable relationship to the regulation's costs; and (3) the regulation imposes the least burdensome requirement that would prevent or adequately reduce the risk of injury. *Id.* These findings are stated in § 1262.5 of the rule and are based on information provided throughout this preamble and the staff's briefing packages for the proposed and final rules.

VIII. Final Regulatory Analysis

The Commission is issuing this rule under sections 7 and 9 of the CPSA. The CPSA requires that the Commission publish a final regulatory analysis with the text of the final rule. 15 U.S.C. 2058(f)(2). This section of the preamble provides the final regulatory analysis of the rule, which is discussed further in Tab F of Staff's Final Rule briefing package.

A. Societal Costs of Deaths and Injuries

The Commission's ICM provides estimates of the societal costs of injuries reported through NEISS, as well as the societal costs of other medically treated injuries. The major aggregated societal cost components provided by the ICM include medical costs, work losses, and the intangible costs associated with lost quality of life or pain and suffering.

Medical costs include three categories of expenditures: (1) medical and hospital costs associated with treating the injury victim during the initial recovery period and in the long term, including the costs associated with corrective surgery, the treatment of chronic injuries, and rehabilitation services; (2) ancillary costs, such as costs for prescriptions, medical equipment, and ambulance transport; and (3) costs of health insurance claims processing. For the ICM, CPSC derives the cost estimates for these expenditure categories from national and state databases including Medical Expenditure Panel Survey (MEPS), the Nationwide Inpatient Sample of the Healthcare Cost and Utilization Project (HCUP–NIS), the Nationwide Emergency Department Sample (NEDS), the National Nursing Home Survey (NNHS), MarketScan® claims data, and a variety of other federal, state, and private databases.

Work loss estimates are intended to include: (1) the forgone earnings of the victim, including lost wage work and household work; (2) the forgone earnings of parents and visitors, including lost wage work and household work; (3) imputed long-term work losses of the victim that would be associated with permanent impairment; and (4) employer productivity losses, such as the costs incurred when employers spend time juggling schedules or training replacement workers. Estimates are based on information from HCUP–NIS, NEDS, Detailed Claims Information (a workers' compensation database), the National Health Interview Survey, U.S. Bureau of Labor Statistics, and other sources. The intangible, or non-economic, costs of injury reflect the physical and emotional trauma of injury, as well as the mental anguish of victims and caregivers. Intangible costs are difficult to quantify because they do not represent products or resources traded in the marketplace. Nevertheless, they typically represent the largest component of injury cost and need to be accounted for in any benefit-cost analysis involving health outcomes. The ICM develops a monetary estimate of these intangible costs from jury awards for pain and suffering. Although these awards can vary widely on a case-by-case basis, studies have shown them to be systematically related to a number of factors, including economic losses, the type and severity of injury, and the age of the victim.[23] CPSC derived estimates for the ICM from regression analysis of jury awards in nonfatal product liability cases involving consumer products compiled by Jury Verdicts Research, Inc.

Table 8 below provides *annual* estimates of the injuries and societal costs associated with ingestions of magnets categorized as magnet sets, magnet toys, and jewelry. Based on NEISS estimates for 2017 through 2021, there were an estimated annual average of about 481 ED-treated injuries, comprised of 320 injuries that were treated and released and 161 injuries that required hospitalization. Additionally, based on annual estimates from the ICM, 185 injuries were treated outside of hospitals, and another 78 injuries resulted in direct hospital admission.

Based on ICM estimates, these injuries resulted in annual societal costs of $51.8 million (in 2020 dollars) during the period 2017 through 2021. The average estimated societal cost per injury was about $14,000 for injuries treated in physician's offices, clinics, and other non-hospital settings; about $24,000 for injuries that were treated and released from EDs; and about $175,000 for injuries that required admission to the hospital for treatment. Medical costs and work losses (including work losses of caregivers) accounted for about 43 percent of these injury cost estimates, and the less tangible costs of injury associated with pain and suffering accounted for about 57 percent of the estimated injury costs.

In addition to the magnet cases upon which Table 8 was based, for which identifying information was reported (*i.e.,* magnets from magnet sets, magnet toys, or jewelry), there were also 403 NEISS cases during 2017 through 2021 (representing about 1,873 ED-treated injuries annually), in which the magnet type was classified as ''unidentified.'' These cases included narratives that mentioned that at least one magnet was ingested but presented insufficient information to classify the magnet product type. CPSC's analysis of the data, the trends in NEISS, CPSRMS, and poison center-reported,[24] magnet-related incidents relative to the vacated 2014 rule on magnet sets, support the conclusion that the ''unidentified'' magnet products generally involved magnets considered within scope of the rule; that is, intended for subject magnet product uses. Based on ICM estimates for all magnet products involved in ingestion injuries, including unidentified, average annual societal costs for 2017–2021 were $167.9 million. Because CPSC does not know precisely how many of these products would fall within the scope of this rule, CPSC conservatively has not included them in the primary benefit analysis summarized above. Instead, CPSC includes the benefits from unidentified magnet products in this final rule's sensitivity analysis to illustrate the theoretical upper bounds of benefits from this rule.

[23] W. Kip Viscusi (1988), *The determinants of the disposition of product liability cases: Systematic compensation or capricious awards?* International Review of Law and Economics, 8, 203–220; Gregory B. Rodgers (1993), *Estimating jury compensation for pain and suffering in product liability cases involving nonfatal personal injury,* Journal of Forensic Economics 6(3), 251–262; and Mark A. Cohen and Ted R. Miller (2003), ''*Willingness to award*'' *nonmonetary damages and implied value of life from jury awards,* International Journal of Law and Economics, 23, 165–184.

[24] As discussed in the NPR, annual national poison center magnet exposure calls increased by 344 percent from 281 per year (2012–2017) to 1,249 per year (2018–2019). Considering incidents dating back to 2008 (5,738 total), the incidents from 2018 and 2019, alone, accounted for 39 percent of the magnet incidents since 2008. These researchers drew conclusions similar to CPSC's, asserting that significant increases in magnet injuries correspond to periods in which high-powered magnet sets were allowed to be sold. 87 FR 1274.

TABLE 8—ESTIMATED AVERAGE ANNUAL MEDICALLY TREATED INJURIES AND ASSOCIATED SOCIETAL COSTS FOR INGESTIONS OF PRODUCTS CATEGORIZED AS MAGNET SETS, MAGNET TOYS, AND JEWELRY, INCLUDING THOSE FOR UNIDENTIFIED MAGNETS FOR 2017 THROUGH 2021

Injury disposition	Estimated No.	Estimated societal costs ($ millions) *
Doctor/Clinic	185	$2.6
Treated and Released from Hospital ED	320	7.5
Admitted to Hospital through ED (NEISS)	† 161	28.1
Direct Hospital Admissions, Bypassing	78	13.6
Total Medically Attended Injuries	743	51.8

* In 2020 dollars.
† This estimate may not be reliable because of the small number of cases on which it is based.

B. Benefits of the Rule

The benefits of the rule account for the reduction in the risk of injury from magnet ingestions and the resulting value of the societal costs of the injuries that the rule would prevent. In addition to the injuries reflected in the analysis above, staff is aware of four fatalities in the United States resulting from magnet ingestions, excluding one death involving a toy subject to ASTM F963.[25] Given that nearly all incidents result in injuries as opposed to deaths, CPSC focuses its benefits assessment on the mitigation of injuries. However, CPSC does include the mitigation of deaths in the benefits assessment in a sensitivity analysis in this regulatory evaluation.

The annual expected benefits of the rule, on a per-product basis, depend on the exposure to risk associated with subject magnet products, as well as the estimated societal costs described in Table 8, above. Although subject magnet products may retain their magnetism for many years, it is likely that some are discarded well before that time. Thus, the actual expected product life of subject magnet products is uncertain; this analysis presents a range of potential benefit estimates, per subject magnet product, under an assumed product life of 1.5, 2, and 3 years. Table 9 presents benefit estimates under the alternative product life assumptions (line (b)).

TABLE 9—PRESENT VALUE OF SOCIETAL COSTS PER SUBJECT MAGNET PRODUCT IN USE (OR GROSS BENEFITS OF A RULE), FOR THREE EXPECTED PRODUCT LIVES FROM 2017 THROUGH 2021

(a) Aggregate Annual Societal Costs (millions $)	$51.8	$51.8	$51.8
(b) Expected Useful Product Life (years)	1.5	2	3
(c) Magnet Products in Use, Average Annual	515,000	626,000	818,000
(d) Annual Societal Costs per Subject Magnet Product [(a) ÷ (c)]	$101	$83	$63
(e) Present Value of Societal Costs, per Subject Magnet Product[26] (*3% Discount Rate*)	$150	$162	$180
(f) Present Value of Societal Costs, per Subject Magnet Product (*7% Discount Rate*)	$144	$154	$167

Line c presents the average annual estimated number of subject magnet products in use during the period 2017 through 2021, based on producer-reported annual magnet set sales collected by CPSC's Office of Compliance and Field Operations up through mid-2012. The estimate also includes assumptions of annual sales of all subject magnet products through 2021 (including an assumption of 500,000 units per year for 2017–2021 as explained below), an expected product life of 1.5, 2, and 3 years (line b), and the application of the CPSC's Product Population Model, a statistical model that projects the number of products in use, given estimates of annual product sales and product failure rates. In the NPR, the Commission requested comments with information on annual sales and expected product life of magnet products subject to the proposed rule. No commenter provided specific sales or product life information, however.

The annual estimated societal costs per subject magnet product in use (line d of Table 2) are presented as the quotient of the annual societal costs (line a), and the estimated average number of products in use (line c). Based on these estimates, and an assumed average product life ranging from 1.5 to 3 years, the present value of societal costs, per subject magnet product, ranges from about $150 to about $180, using a 3 percent discount rate (line e), or from about $144 to $167, using a 7 percent discount rate (line f).

Because the rule would prohibit the sale of the subject magnet products with one or more loose or separable hazardous magnets, the approximation of benefits would be equal to the present value of societal costs presented in lines (e) and (f) and would range from about $144 (with a 1.5-year product life and a 7 percent discount rate) to $180 (with a 3-year product life and a 3 percent discount rate) per product.

C. Costs Associated With the Rule

This section discusses the costs associated with the rule, which include costs to consumers and to manufacturers/importers of subject magnet products. Both consumers and producers benefit from the production and sale of consumer products. The consuming public obtains the use value or utility associated with the consumption of products; producers obtain income and profits from the production and sale of products. Consequently, the costs of requiring that

[25] Staff is aware of seven deaths that occurred in the period November 24, 2005, to January 5, 2021, involving ingestion of hazardous magnets. Two of these deaths occurred abroad, and one of the five U.S. ingestion cases occurred before 2010, and that case involved a children's toy subject to ASTM F963.

[26] These calculations are based on estimated product survival by month after purchase, which is multiplied by monthly societal costs per unit. The streams of expected societal costs are then discounted to their present values (at 3% and 7%).

subject magnet products comply with the rule would consist of: (1) the lost use value experienced by consumers who would no longer be able to purchase subject magnet products that do not meet the standard (at any price) and who cannot find an appropriate substitute; and (2) the lost income and profits to firms that could not produce, import, or sell noncomplying products in the future.

Both consumer and producer surplus depend on product sales, among other things. The unit sales of subject magnet products are not known. This analysis accordingly considers possible costs associated with several plausible estimates of sales, ranging from about 100,000 to 1 million subject magnet products per year. The lower bound of 100,000 units [27] and upper bound of 1 million units are based on information from reports by firms to CPSC's Office of Compliance and Field Operations.[28] For purposes of exposition, CPSC uses an assumption of annual sales of 500,000 units per year, in the midpoint of the range of estimates. CPSC uses a wide range, not because of the appropriate endpoints of that range are precisely determined, but instead to demonstrate that, even at the extremes of a reasonable range, the overall result of preliminary regulatory analysis is that the rule's benefits outweigh the costs.

1. Costs to Consumers

The primary cost associated with the rule is lost utility to consumers. Subject magnet products may be used for a variety of purposes, including amusement and jewelry. CPSC has received comments regarding subject magnet products, including magnet sets, citing usefulness of the magnets as a manipulative or construction item for entertainment, such as puzzle working, sculpture building, or stress relief. Others have claimed that the magnets can have beneficial artistic, educational, social, innovative, and therapeutic values. In addition to consumer uses promoted by sellers, and uses reported in comments by consumers, use of magnets as jewelry from magnet sets is a common hazard pattern. The individual magnets might also have other uses, apart from their intended uses (*e.g.,* using magnets from a magnet set to post items on a refrigerator door). Thus, CPSC concludes that consumers derive utility from magnet sets and other subject magnet products within the scope of the rule from a wide variety of uses, even those not promoted by sellers.

CPSC cannot estimate with any precision the use value that consumers receive from these products. However, we can describe use value conceptually. In general, use value includes the amount of: (1) consumer expenditures for the product, plus (2) what is called ''consumer surplus.'' Assuming annual sales of about 500,000 subject magnet products as explained above, and an average retail price of about $20 (based on price data for magnet sets), consumer expenditures would amount to about $10 million annually. These expenditures represent the minimum value that consumers would expect to get from these products. It is represented by the area of the rectangle OBDE in the standard supply and demand graph below (Figure 3), where B equals $20, and E equals 500,000 units.

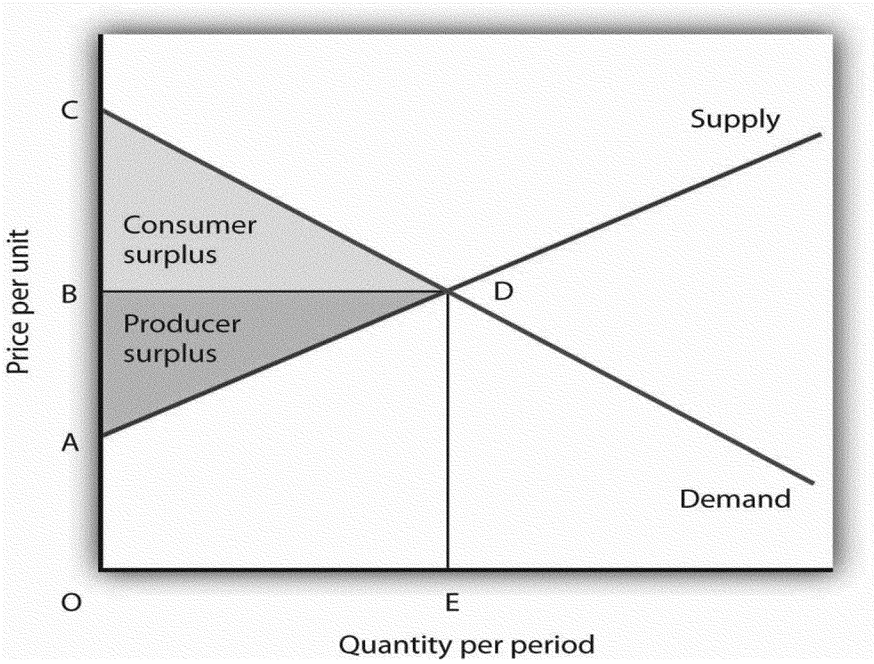

Figure 3: Supply and demand graph illustrating the concepts of consumer and producer surplus.

[27] The lower bound estimate in the NPR was 250,000. 87 FR 1303. Since the NPR, a leading seller was subject to a recall. To account for this change, an adjustment to 100,000 was made.

[28] For the 2014 magnet sets rule CPSC assessed that 2.7 million magnet sets were sold to U.S. consumers from 2009 through mid-2012, or an average of about 800,000 annually. Since 2012, administrative actions and recalls have set the market in a state of flux and sales have likely decreased. To capture this change in lieu of industry data (of which none was subsequently provided by commenters during the NPR comment period) CPSC made an adjustment from 800,000 to 500,000 magnets sets sold on an annual basis. CPSC then added a range of −50% (250,000) and +100% (1 million) to represent the theoretical extremes. More weight was given to the upside to account for CPSC's assessment that a rebound back to 2012 sales level and beyond was likelier than the same magnitude of decline.

In Figure 3, consumer surplus is given by the area of the triangle BCD under the graph's demand function and represents the difference between the market-clearing price and the maximum amount consumers would have been willing to pay for the product. This consumer surplus will vary for individual consumers, but it represents a benefit to consumers over and above what they paid. For example, tickets to a concert might sell for $100 each, but some consumers who buy them for $100 would have been willing to pay $150 per ticket. Those consumers paid $100 and received benefits that they value at $150, thereby receiving a consumer surplus of $50.

In general, the use value of the subject magnet products obtained by consumers is represented by the area of the trapezoid OCDE in Figure 3. However, the prospective loss in use value associated with the rule would amount to, at most, the area of the triangle representing the consumer surplus. This is because consumers would no longer be able to obtain utility from the products that do not comply with the rule, but they would have the $10 million (represented by the rectangle OBDE) that they would have spent on noncomplying subject magnet products in the absence of a rule. The net loss in consumer surplus associated with the rule would be reduced by consumers' ability to purchase replacement products that comply with the rule and provide the same utility, or by their ability to purchase other products that provide use-value.

CPSC does not have, and no commenter offered, information regarding aggregate consumer surplus, or, by extension, the amount of utility that would be lost as a result of the rule. However, if, for example, consumers who purchased subject magnet products that do not comply with the rule at an average price of $20, would have been willing to spend, on average, $35 to $45 per product (*i.e.,* an additional $15 to $25 per product), then the lost utility would amount to about $7.5 million (*i.e.,* [$35 − $20] × 500,000 units annually) to $12.5 million (*i.e.,* [$45 − $20] × 500,000 units annually) annually.

Finally, we note that the loss in consumer surplus just described represents the maximum loss of consumer utility from the rule. This is because consumers are likely to gain some amount of consumer surplus from products that are purchased as an alternative to those subject magnet products that would no longer be available because of the rule. If, for example, consumers purchased close substitutes (*e.g.,* products that are almost as satisfying and similarly priced) for the subject magnet products that do not meet the standard, the overall loss in consumer surplus (and, hence, the costs of the rule) would tend to be small. On the other hand, if consumers do not purchase close substitutes, the costs of the rule would be higher.

2. Costs to Manufacturers/Importers

The lost benefits to firms that could result from the rule are measured by a loss in what is called producer surplus. Producer surplus is a profit measure that is analogous to consumer surplus. Whereas consumer surplus is a measure of benefits received by individuals who consume products, net of the cost of purchasing the products, producer surplus is a measure of the benefits accruing to firms that produce and sell products, net of the costs of producing them. More formally, ''producer surplus'' is defined as the total revenue (TR) of firms selling the magnets, less the total variable costs (TVC) of production. Variable costs are costs that vary with the level of output and usually include expenditures for raw materials, wages, distribution of the product, and the like.

In Figure 3, total revenue is given by the area OBDE, which is simply the product of sales and price. The total variable costs of production are given by the area under the supply function, OADE. Consequently, producer surplus is given by the triangle ABD, which is the area under the market clearing price and above the supply function. Note that this represents the maximum loss to producers; if suppliers produce and sell alternatives that are similar to the subject magnet products, the lost producer surplus could be less.

Following our example above, assuming sales of the subject magnet products average 500,000 units annually, with an average retail price of $20 per product total industry revenues have averaged about $10 million annually (*i.e.,* 500,000 units × $20 per product). Information provided by magnet set sellers to CPSC's Office of Compliance and Field Operations suggested that the average import cost of magnet sets to U.S. importers, a major variable cost, may amount to about $10 per set, or an average of about $5 million annually (*i.e.,* 500,000 sets × $10 import cost per set). Apart from the import costs of the magnets, the variable costs of production are probably relatively small. Because magnet sets are often packaged and shipped from China and sometimes sent directly to the importer's point of sale, U.S. labor costs may be low; and because the magnets sets are small, non-perishable, and not particularly valuable, storage costs likewise are low. For example, assuming the variable costs of production account for about half of the difference between total revenues ($10 million) and import costs ($5 million), producer surplus would amount to about $2.5 million (*i.e.,* ($10 million − $5 million) ÷ 2) annually. At most, the lost producer surplus would amount to about $5 million annually, if there were no variable costs other than the costs of importing the magnets (*i.e.,* total revenue of $10 million for 500,000 units annually, less the import costs of about $5 million). Although this information is specifically related to magnet sets, a similar relationship could apply to other subject magnet products affected by the rule.

Manufacturers and importers might be able to respond to the rule by measures such as marketing or incorporating magnets that comply with the rule or increased marketing of products that do not have loose or separable magnets. Such measures would offset losses in producer surplus resulting from firms' inability to continue marketing noncomplying magnet products.

As noted above, actual sales levels of non-complying subject magnet products are not known with certainty. Additionally, CPSC cannot estimate precisely either consumer surplus or producer surplus; nor were any such data provided in response to the NPR's request for such information. Table 10 below provides rough estimates of the possible costs of the rule for various future hypothetical sales levels ranging from 100,000 to 1 million products annually. The cost estimates are based on the assumptions described above and are made for illustrative purposes. Nevertheless, because the range of sales is wide, and the range provide here is likely to include the actual annual sales levels, it is reasonable to assume that the costs of the rule are within the range from approximately $2 million to $3.5 million (if sales amount to about 100,000 products annually), to about $20 million to $35 million (if sales amount to about 1 million products annually). As noted above, these costs could be offset by increased marketing of products that incorporate complying magnets or by incorporating products that do not include loose or separable magnets.

TABLE 10—POSSIBLE COSTS OF THE RULE, FOR VARIOUS LEVELS OF NONCOMPLYING SUBJECT MAGNET PRODUCT SALES

Magnet product sales (annually)	Consumer surplus (millions $)	Producer surplus (millions $)	Total costs (millions $)
100,000	$1.5 to $2.5	$0.5 to $1	$2 to $3.5
500,000	$7.5 to $12.5	$2.5 to $5	$10 to $17.5
750,000	$11.25 to $18.75	$3.75 to $7.5	$15 to $26.25
1,000,000	$15 to $25	$5 to $10	$20 to $35

In addition to lost producer surplus, manufacturers and importers of subject magnet products that comply with the rule would incur some additional costs to certify that their products meet the requirements of Section 14 of the CPSA. The certification must be based on a test of each product model or a reasonable testing program. The costs of the testing might be minimal, especially for manufacturers that currently have product testing done for products subject to the requirements in ASTM F963. Importers may also rely upon testing completed by other parties, such as their foreign suppliers, if those tests provide sufficient information for the manufacturers or importers to certify that the magnets in their products comply with the rule. As noted above, for subject magnet products that are children's products, such as children's jewelry, the certification must be based on testing by an accredited third party conformity assessment body, at somewhat higher costs.

D. Sensitivity Analysis

The foregoing base-case analysis of potential costs and benefits of the rule presents estimated costs for a wide range of prospective sales in the absence of a rule, 100,000 to 1 million units. Estimated potential benefits/societal costs of injuries per unit are based on expected useful product life of 18 months, 2 years, and 3 years. The present value of expected injury costs occurring over the lives of products are discounted at 3 percent and 7 percent. Thus, the base analysis incorporates sensitivity analysis for some important parameters and assumptions. Staff conducted additional sensitivity analysis to evaluate the impact of variations in some other important parameters. Alternative inputs for the sensitivity analysis included:

- Assuming lower and higher unit sales in recent years than the base case of 500,000 units for 2017 through 2022;
- Assuming 25 percent, 50 percent, and 100 percent of estimated injury costs involving unidentified magnet products would be addressed by the rule, and;
- Including an estimate of societal costs of fatal ingestion injuries in the potential benefits calculation.

Staff's sensitivity analysis shows that per-unit injury costs being addressed by the rule vary greatly for the wide range of assumed annual unit sales. However, for all scenarios examined, the potential benefits well exceed the estimated costs of the rule, in the form of lost consumer surplus and lost producer surplus, estimated to range generally from $20 to $35 per subject magnet product. In addition, the sensitivity analysis shows that including even a relatively small portion of NEISS cases involving unidentified magnet products to the base case, which is limited to in-scope identified products, substantially increase the estimated gross benefits of the rule.

If 100 percent of unidentified magnet injuries were within the scope of the draft final rule, average estimated annual magnet ingestion societal costs would be an additional $167.9 million. Including these societal costs with those estimated for in-scope identified subject magnet products ($51.8 million) results in average annual societal costs of magnet ingestion injuries of $219.7 million for the period 2017 through 2021, an increase of 324 percent. Including these cases as addressable societal costs would lead to a corresponding increase the estimated gross benefits of the rule.

In estimating the benefits of the rule associated with reduced mortality, we assume that the standard will avoid two to four deaths over a 10-year period, the average annual statistical value of the rule's life-saving could be about $2.1 million to $4.2 million. Adding these potential societal costs to those associated with nonfatal magnet ingestions would increase the expected gross benefits of the proposed standard by about 4 percent to 7 percent over the base estimate.

E. Summary of the Final Regulatory Analysis Results

Estimated aggregate annual societal costs from ingestion injuries involving subject magnet products for 2017 through 2021 total $51.8 million. Assumptions about annual product sales and expected product life of 1.5, 2, and 3 years yields estimated numbers of products in use during those years ranging from 515,000 to 818,000. The estimated present value of societal costs per subject magnet product (at a 3% discount rate) ranges from $150 per unit (at a 1.5-year expected life) to $180 per unit (at a 3-year expected life). On the cost side, estimates of consumer and producer surplus were uncertain, but they might range from about $2–$3.5 million to about $20–$35 million, based on unit sales ranging from 100,000 to 1 million.

Based on annual unit sales of noncomplying subject magnet products of 500,000, expected aggregate benefits total $51.8 million annually, while costs (lost consumer and producer surplus) range from $10 million to $17.5 million annually. Thus, although both the benefits and costs of the rule are uncertain, based on a range of assumptions, our estimates suggest that the potential benefits of the rule are projected to exceed the potential costs. These estimated benefits exclude cases involving in-scope magnet products that have not been identified as amusement/jewelry products. As discussed, the sensitivity analysis shows that including NEISS cases involving unidentified magnet products to the base case substantially increases the estimated gross benefits of the rule.

Table 11, below, shows a comparison of the estimated benefits and costs of the rule.

TABLE 11—COMPARISON OF ESTIMATED BENEFITS AND COSTS OF THE RULE

Annual magnet product sales [1]	Benefits (millions $)		Total costs from lost consumer & producer surplus (millions $)
	Identified as amusement and/or jewelry	Including 100% of unidentified magnet incidents	
500,000	$51.8	$167.9	$10 to $17.5.

IX. Alternatives to the Rule

CPSC considered several alternatives to reduce the risk of injuries and death associated with ingestion of subject magnet products. However, as discussed below, CPSC does not consider any of these alternatives capable of adequately reducing the risk of injury and death.

A. Rely on Voluntary Standards

One alternative to the rule is to take no regulatory action and, instead, rely on voluntary safety standards to address the magnet ingestion hazard. As discussed above, there are four ASTM standards and two international standards that address the magnet ingestion hazard, covering children's toys, jewelry, and magnet sets. Relying on these standards would eliminate the costs associated with the rule because it would not mandate compliance.

However, there are considerable limitations and unknowns associated with this alternative. The shortcomings of the standards are discussed in detail in section V. in the preamble. CPSC does not consider the existing voluntary standards capable of adequately reducing the magnet ingestion hazard, either individually or collectively, because their limited scope fails to cover all of the subject magnet products associated with injuries and deaths, and/or the voluntary standards do not impose size and strength limits on subject magnet products with loose or separable magnets. In addition, CPSC does not know the level of compliance with ASTM F3458, ASTM F2999, or ASTM F2923; if the rate of compliance is low, these would not be an effective way to address the hazard, even if the requirements in these standards were adequate. Finally, waiting for ASTM to revise its standards to adequately address the hazard would delay the safety benefits of the final rule. For these reasons, the Commission did not select this alternative.

B. Alternative Performance Requirements

Another alternative to the rule is to adopt a mandatory standard with less stringent requirements than the rule, such as a higher flux index limit, or different requirements for certain shapes and sizes of magnets. This may reduce the costs associated with the rule, by allowing firms to market and permit consumers to use a wider variety of products than under the rule. The reduction in costs would depend on the specific requirements adopted. As discussed in section V of the preamble, no other performance requirements in the currently applicable voluntary standards, aside from flux method test requirements in ASTM F963 Toy Standard, have been shown to adequately address the ingestion hazards associated with subject magnet products. Accordingly, on the record before us, choosing alternative performance requirements would reduce the safety benefits of the rule. If the alternative performance requirements reduced costs by allowing more products to remain on the market, it would also leave more hazardous products on the market, thereby decreasing the safety benefits.

The rule mandates a performance requirement that duplicates the ASTM F963 Toy Standard's approach to addressing magnet internal interaction hazard in children, which has been shown to be effective. The current ASTM test to determine flux index is a method that has been used by test labs to determine compliance with ASTM F963 and is a method that is also used by other domestic and international standards for identifying hazardous magnets. Importers may also rely upon testing completed by other parties, such as their foreign suppliers, if those tests provide sufficient information for the manufacturers or importers to certify that the magnets in their products comply with the rule. Firms that magnetize the products would have equipment to measure the magnetic force of their products; and many of these firms should be familiar with the test methodology or have access to testing firms that can perform the tests. The increased costs related to testing therefore should be relatively minor, especially for small manufacturers that currently have product testing done for products subject to the requirements in ASTM F963–17, which is mandated by 16 CFR part 1250. For these reasons, the Commission did not select alternative performance requirements.

C. Require Safety Messaging

Instead of performance requirements, the Commission could require safety messaging on products to address the magnet ingestion hazard, such as through labeling and instructional literature. This alternative would reduce the costs associated with the rule, because it would allow firms to continue to sell subject magnet products with loose or separable hazardous magnets and the costs of providing warnings and instructional information likely would be small.

However, CPSC does not consider this alternative effective for adequately reducing the risk of injury and death associated with magnet ingestions, as discussed in section V of the preamble. To summarize, the effectiveness of warnings depends on convincing consumers to avoid the hazard, and there are numerous reasons consumers may disregard warnings for these products. Caregivers do not expect older children and teens to ingest inedible objects; the magnet ingestion hazard is not readily apparent; caregivers and children underappreciate the likelihood and severity of the hazard; magnets are often ingested accidentally; and children and teens commonly access magnets without their packaging.

Warning information on labels and instructional literature, as well as public outreach efforts to inform consumers of the hazard, have been used for many years to try to address the magnet ingestion hazard. However, these efforts have not addressed the magnet ingestion hazard successfully, as evidenced by the increase in magnet ingestion incidents in recent years, including magnet ingestion incidents involving products with clear warnings. For all these reasons, the Commission did not select this alternative.

D. Require Special Packaging

Another alternative is for the Commission to require special packaging for subject magnet products that contain hazardous magnets to limit children's access to the products. Such packaging could, for example, help consumers determine if all magnets have been returned to the package and include child-resistant features. Although this alternative would create some costs associated with packaging, those costs likely would be lower than the cost of the rule because they would allow the subject magnets to remain unchanged. Staff estimates that the cost of safety packaging may amount to about $1 per magnet product, depending on the requirements and features of the packaging.

CPSC does not consider this alternative effective for adequately reducing the risk of injury and death associated with magnet ingestions. To summarize the detailed discussion in section V. of the preamble, consumers are unlikely to repackage all magnets after each use. Even if consumers return all magnets to a package after each use, safety features to prevent easy access to the contents of the package would address only a minority of the vulnerable population. Safety packaging is generally intended to restrict children under 5 years old from accessing package contents. Older children and teens are likely to have the cognitive and motor skills necessary to access products in special packaging. This is problematic because incident data show that older children and teens make up the majority of magnet ingestion victims. In addition, many incidents involve children and teens acquiring magnets without the product packaging, such as from friends, at school, or loose in the environment. For these reasons, the Commission did not select this alternative.

E. Require Aversive Agents

Instead of the size and strength requirements in the rule, the Commission could require manufacturers to coat loose or separable hazardous magnets in subject magnet products with aversive agents, such foul odors or bitterants. Aversive agents may dissuade some children and teens from placing hazardous magnets in their mouths. This alternative would reduce the costs associated with the rule, because it would allow firms to continue to sell subject magnet products with loose or separable hazardous magnets, would allow consumers to continue to use them, and the costs of such coatings likely would be small.

CPSC does not consider this alternative effective for adequately reducing the risk of injury and death associated with magnet ingestions. To summarize the detailed discussion in section V. of the preamble, real-world investigations have not demonstrated that bitterants are effective at preventing ingestions. Bitterants do not deter initial ingestion because the user has not yet tasted the bitterant; this makes bitterants ineffective at protecting users from harms that can result from a single ingestion. Incident reports indicate that ingesting a single magnet (and ferromagnetic object), or multiple magnets at once or in quick succession, can result in serious injuries. In addition, once a magnet is in a person's mouth, they may not be able to prevent ingestion, even if deterred by a bitterant. Bitterants would be particularly ineffective for accidental ingestions, where victims do not intentionally place magnets in their mouth; incident data indicate that some magnet ingestions involve unintentional ingestions, particularly for older victims. Moreover, children frequently ingest unpalatable substances, such as gasoline, cleaners, and ammonia, indicating that unpleasant taste or odor, alone, is not sufficient to deter children from ingesting items or substances. Finally, some portion of the population, possibly as high as 30 percent, may be insensitive to certain bitterants. For these reasons, the Commission did not select this alternative.

F. Later Effective Date

Another alternative is to provide a later effective date for a final rule. In the NPR, the Commission proposed a final rule effective 30 days after it is published. A later effective date would reduce the impact of the rule on manufacturers and importers, by providing additional time for firms to develop products that comply with the rule or modify products to comply with the rule. However, delaying the effective date would delay the safety benefits of the rule as well. Additionally, one commenter, Retrospective Goods, LLC, stated that 30 days is adequate for manufacturers and importers to come into compliance with the rule. As such, the Commission did not select this alternative.

X. Paperwork Reduction Act

This rule does not contain a ''collection of information'' as that term is used in the Paperwork Reduction Act (44 U.S.C. 3501–3521). Therefore, the rule need not be submitted to the Office of Management and Budget in accordance with 44 U.S.C. 3507(d) and implementing regulations codified at 5 CFR 1320.11.[29]

XI. Final Regulatory Flexibility Analysis

The Regulatory Flexibility Act (RFA) requires that agencies review rules for their potential economic impact on small entities, including small businesses. Section 604 of the RFA calls for agencies to prepare a final regulatory flexibility analysis, describing the impact of the rule on small entities and identifying impact-reducing alternatives. Further details about the initial regulatory flexibility analysis are available in Tab F of Staff's NPR briefing package, as updated in Tab F of Staff's Final Rule briefing package. Additional information about costs associated with the rule are available in Tab E of Staff's NPR briefing package, as updated in Tab E of Staff's Final Rule briefing package.

A. The Need for, and Objectives of, the Rule

The rule prohibits the sale or distribution in commerce of subject magnet products that do not meet the specific requirements described in section VII of this preamble. CPSC has received information, as described in section IV of this preamble, regarding the hazards posed by, and growing numbers of injuries with, hazardous magnets in consumer products. These interactions have led to serious injuries and deaths, typically by causing intestinal twisting (volvulus injuries), fistulae, and perforations. Many of these ingestions resulted in surgical removal of magnets and surgical repair of injuries, and others required non-surgical medical interventions, such as emergency endoscopies and colonoscopies.

The objective of the rule is to eliminate or reduce the risk of injury to consumers from the ingestion of one or more small, powerful magnets that comprise the subject magnet products, and thereby reduce the future incidence and cost to society of magnet ingestions.

B. Comments on the Initial Regulatory Flexibility Analysis

CPSC received comments from more than 700 parties in response to the NPR. The Commission's responses to comments that address issues that were mentioned in the IRFA are included in section VI.B. of the preamble. None of the comments resulted in changes to the

[29] There is an Office of Management and Budget control number, under the Paperwork Reduction Act, for collection of information regarding third party testing for children's products, addressed in 16 CFR part 1107.

regulatory analysis or regulatory flexibility analysis.

C. Comments From the Chief Counsel for Advocacy of the U.S. Small Business Administration

The U.S. Small Business Administration (SBA) did not file comments on the proposed rule.

D. Small Entities Subject to the Rule

The rule would affect firms or individuals who manufacture, import, and sell subject magnet products. All of the identified importers of magnet sets are small businesses under applicable SBA size standards, and we expect this is also true for manufacturers and importers of other subject magnet products, such as jewelry with loose/separable magnets.

As discussed in section III.B. of the preamble, reviews of the online market for magnet sets from 2018 to July 2021 by CPSC staff and IEc found that the leading internet marketplaces have high turnover rates for magnet set sellers and magnet set products offered on their sites. The most recent review in 2021 found that the great majority of sellers of magnet sets (in terms of distinct firms or individuals, if not unit sales) appeared to sell through their stores operated on the sites of other internet retailer platforms. The dominant business model for importers of magnet sets is expected to be direct sales to consumers using their own internet websites or other internet shopping sites. However, the rule could also affect some third party retailers of the products, whether selling them online or physically in ''brick & mortar'' stores, such as bookstores, gift shops, or stores that sell novelty items.

E. Projected Reporting, Recordkeeping, and Other Compliance Requirements

Section 14(a)(1) of the CPSA requires manufacturers, importers, or private labelers of a consumer product (that is not a children's product) subject to a consumer product safety rule to certify, based on a test of each product or a reasonable testing program, that the product complies with all rules, bans or standards applicable to the product. 15 U.S.C. 2063(a)(1). The rule specifies the procedure to use to determine whether a subject magnet product complies with those requirements. For products that manufacturers certify based on a test of each product or a reasonable testing program, manufacturers would issue a general certificate of conformity (GCC). Section 14(a)(2) of the CPSA, 15 U.S.C. 2063(a)(2), requires manufacturers, importers, or private labelers of any product subject to a children's product safety rule to submit sufficient samples of the children's product, or samples that are identical in all material respects to the product, to a CPSC-accepted, third party conformity body for testing. Based on passing test results from the CPSC-accepted, third party conformity body, the manufacturer, importer, or private labeler issues a Children's Product Certificate (CPC) indicating the children's product is compliant with the children's product safety rule. For example, in the case of subject magnet products that are children's products, such as children's jewelry, the CPC must be based on testing by a CPSC-accepted third party conformity assessment body. The CPC must be furnished to each distributor or retailer of the product and to the CPSC, if requested.

F. Steps Taken To Minimize Significant Impact on Small Entities

Small manufacturers/importers of subject magnet products would likely incur some additional costs to certify that their products meet the requirements of the rule, as required by Section 14 of the CPSA. The certification must be based on a test of each product or a reasonable testing program. CPSC is mandating a performance requirement that duplicates the ASTM F963 Toy Standard approach to addressing magnet internal interaction hazard in children. The current ASTM test to determine flux index is a method that has been used by test labs to determine compliance with the ASTM F963 and in other domestic and international standards for identifying hazardous magnets. The increased costs related to testing should be relatively minor, especially for manufacturers that currently have product testing done for products subject to the requirements in the ASTM F963. As noted above, for subject magnet products that are children's products other than toys, such as children's jewelry, the certification must be based on testing by an accredited third party conformity assessment body, at somewhat higher costs.

As discussed in section VIII of the preamble, the main impact on small businesses of a rule would be the lost income and profits to firms that could not produce, import, and sell noncomplying products in the future. The lost benefits to firms results from producer surplus is a measure of the total revenue of firms selling the magnets, less the total variable costs of production. As predominantly imported products, the variable costs for small businesses handling subject magnet products are mainly the import costs. The producer surplus for magnet sets could average about $5 to $10 per unit, based on an average retail price of $20. A similar relationship could apply to other subject magnet products affected by the rule, such as jewelry with separable magnets.

A few small firms whose businesses focus on sales of magnet products that would not comply with the rule, including some of the firms selling products on their own websites, would face relatively greater losses in producer surplus. These and other small businesses could respond to the rule by measures such as marketing or incorporating magnets that comply with the rule or increased marketing of products that do not have loose or separable magnets. Such measures could offset losses in producer surplus resulting from firms' inability to continue marketing noncomplying magnet products.

As discussed in the analysis above, all domestic firms that are expected to manufacture or import subject magnet products are small businesses. Therefore, an exemption for small manufacturers/importers is not possible, because all manufacturers/importers that would be subject to the rule are small.

G. Alternatives to the Rule

CPSC considered several other alternatives that might reduce the impact of a rule on small businesses, including promulgating an alternative set of requirements for the flux index or size of the magnets; requiring safer packaging; requiring warnings on the packaging and promotional materials; requiring aversive agents on magnets; relying on voluntary standards; delaying the effective date; and taking no action. Each of these alternatives is addressed in section IX of the preamble. All of these alternatives would reduce the expected impact of the rule on small business. However, as discussed in section IX of this preamble, these alternatives would not achieve the same injury reductions as the rule, and their adoption would not result in a rule that adequately addresses the risk of serious injury or death caused by ingestions of magnets from the subject magnet products.

XII. Incorporation by Reference

The rule incorporates by reference ASTM F963–17. The Office of the Federal Register (OFR) has regulations regarding incorporation by reference. 1 CFR part 51. Under these regulations, in the preamble, an agency must summarize the incorporated material

and discuss the ways in which the material is reasonably available to interested parties, or how the agency worked to make the materials reasonably available. 1 CFR 51.5(a). In accordance with the OFR requirements, this preamble summarizes the provisions of ASTM F963–17 that the Commission incorporates by reference in section VII of the preamble.

The standard is reasonably available to interested parties and interested parties can purchase a copy of ASTM F963–17 from ASTM International, 100 Barr Harbor Drive, P.O. Box C700, West Conshohocken, PA 19428–2959 USA; telephone: (610) 832–9585; *www.astm.org.* Once this rule takes effect, a read-only copy of the standard will be available for viewing at no charge on the ASTM website at: *www.astm.org/READINGLIBRARY/.* Interested parties can also schedule an appointment to inspect a copy of the standard at CPSC's Office of the Secretary, U.S. Consumer Product Safety Commission, 4330 East West Highway, Bethesda, MD 20814, telephone: (301) 504–7479; email: *cpsc-os@cpsc.gov.*

XIII. Testing, Certification, and Notice of Requirements

Section 14(a) of the CPSA includes requirements for certifying that children's products and non-children's products comply with applicable mandatory standards. 15 U.S.C. 2063(a). Section 14(a)(1) addresses required certifications for non-children's products, and sections 14(a)(2) and (a)(3) address certification requirements specific to children's products.

A ''children's product'' is a consumer product that is ''designed or intended primarily for children 12 years of age or younger.'' *Id.* 2052(a)(2). The following factors are relevant when determining whether a product is a children's product:

- manufacturer statements about the intended use of the product, including a label on the product if such statement is reasonable;
- whether the product is represented in its packaging, display, promotion, or advertising as appropriate for use by children 12 years of age or younger;
- whether the product is commonly recognized by consumers as being intended for use by a child 12 years of age or younger; and
- the Age Determination Guidelines issued by CPSC staff in September 2002, and any successor to such guidelines.

Id. ''For use'' by children 12 years and younger generally means that children will interact physically with the product based on reasonably foreseeable use. 16 CFR 1200.2(a)(2). Children's products may be decorated or embellished with a childish theme, be sized for children, or be marketed to appeal primarily to children. *Id.* 1200.2(d)(1).

As discussed in section III of the preamble, some subject magnet products (*e.g.,* children's jewelry) are children's products and some are not. Therefore, this rule requires subject magnet products that are not children's products to meet the certification requirements under section 14(a)(1) of the CPSA and requires subject magnet products that are children's products to meet the certification requirements under sections 14(a)(2) and (a)(3) of the CPSA. The Commission's requirements for certificates of compliance are codified in 16 CFR part 1110.

Non-Children's Products. Section 14(a)(1) of the CPSA requires every manufacturer (which includes importers [30]) of a non-children's product that is subject to a consumer product safety rule under the CPSA or a similar rule, ban, standard, or regulation under any other law enforced by the Commission to certify that the product complies with all applicable CPSC requirements. 15 U.S.C. 2063(a)(1).

Children's Products. Section 14(a)(2) of the CPSA requires the manufacturer or private labeler of a children's product that is subject to a children's product safety rule to certify, based on testing by a third-party conformity assessment body (*i.e.,* testing laboratory), that the product complies with the applicable children's product safety rule. *Id.* 2063(a)(2). Section 14(a) also requires the Commission to publish an NOR for a testing laboratory to obtain accreditation to assess conformity with a children's product safety rule. *Id.* 2063(a)(3)(A). Because some subject magnet products are children's products, the rule is a children's product safety rule, as applied to those products.

The Commission published a final rule, codified at 16 CFR part 1112, entitled *Requirements Pertaining to Third Party Conformity Assessment Bodies,* which established requirements and criteria concerning testing laboratories. 78 FR 15836 (Mar. 12, 2013). Part 1112 includes procedures for CPSC to accept a testing laboratory's accreditation and lists the children's product safety rules for which CPSC has published NORs. When CPSC issues a new NOR, it must amend part 1112 to include that NOR. Accordingly, in this rule, the Commission amends part 1112 to add this standard for magnets to the list of children's product safety rules for which CPSC has issued an NOR.

Testing laboratories that apply for CPSC acceptance to test subject magnet products that are children's products for compliance with the new rule must meet the requirements in part 1112. When a laboratory meets the requirements of a CPSC-accepted, third party conformity assessment body, the laboratory can apply to CPSC to include 16 CFR part 1262, *Safety Standard for Magnets,* in the laboratory's scope of accreditation on the CPSC website at: *www.cpsc.gov/labsearch.*

XIV. Environmental Considerations

The Commission's regulations address when CPSC is required to prepare an environmental assessment (EA) or an environmental impact statement (EIS). 16 CFR 1021.5. Those regulations list CPSC actions that ''normally have little or no potential for affecting the human environment,'' and therefore, fall within a ''categorical exclusion'' under the National Environmental Policy Act (42 U.S.C. 4231–4370h) and the regulations implementing it (40 CFR parts 1500–1508) and do not require an EA or EIS. 16 CFR 1021.5(c). Among those actions are rules that provide performance standards for products. *Id.* 1021.5(c)(1). Because this rule would create performance requirements for subject magnet products, the rule falls within the categorical exclusion, and thus, no EA or EIS is required.

XV. Preemption

Executive Order (E.O.) 12988, *Civil Justice Reform* (Feb. 5, 1996), directs agencies to specify the preemptive effect of a rule in the regulation. 61 FR 4729 (Feb. 7, 1996), section 3(b)(2)(A). The regulation for subject magnet products is promulgated under the authority of the CPSA. 15 U.S.C. 2051–2089. Section 26 of the CPSA provides that ''whenever a consumer product safety standard under this Act is in effect and applies to a risk of injury associated with a consumer product, no State or political subdivision of a State shall have any authority either to establish or to continue in effect any provision of a safety standard or regulation which prescribes any requirements as to the performance, composition, contents, design, finish, construction, packaging or labeling of such product which are designed to deal with the same risk of injury associated with such consumer product, unless such requirements are identical to the requirements of the Federal Standard.'' 15 U.S.C. 2075(a). States or political subdivisions of a state may, however, apply for an exemption

[30] The CPSA defines a ''manufacturer'' as ''any person who manufactures or imports a consumer product.'' 15 U.S.C. 2052(a)(11).

from preemption regarding a consumer product safety standard, and the Commission may issue a rule granting the exemption if it finds that the state or local standard: (1) provides a significantly higher degree of protection from the risk of injury or illness than the CPSA standard, and (2) does not unduly burden interstate commerce. *Id.* 2075(c).

Thus, absent grant of an exemption, the requirements of part 1262 preempt non-identical state or local requirements for subject magnet products designed to protect against the same risk of magnet ingestion.

XVI. Congressional Review Act

The Congressional Review Act (CRA; 5 U.S.C. 801–808) states that before a rule may take effect, the agency issuing the rule must submit the rule, and certain related information, to each House of Congress and the Comptroller General. 5 U.S.C. 801(a)(1). The CRA submission must indicate whether the rule is a ''major rule.'' The CRA states that the Office of Information and Regulatory Affairs determines whether a rule qualifies as a ''major rule.''

Pursuant to the CRA, this rule does not qualify as a ''major rule,'' as defined in 5 U.S.C. 804(2). To comply with the CRA, CPSC will submit the required information to each House of Congress and the Comptroller General.

XVII. Effective Date

The CPSA requires that consumer product safety rules promulgated under sections 7 and 9 shall take effect at least 30 days after the date the rule is promulgated, but not later than 180 days after the date the rule is promulgated unless the Commission finds, for good cause shown, that an earlier or later effective date is in the public interest and, in the case of a later effective date, publishes the reasons for that finding. 15 U.S.C. 2058(g)(1). The NPR proposed a 30-day effective date after the rule is published in the **Federal Register**, and no comments were received in opposition to the effective date.[31] Accordingly, the rule will go into effect October 21, 2022 and will apply to all non-exempt subject magnet products manufactured after that date.

Under section 14(a)(3), 15 U.S.C. 2063(a)(3), the testing and certificate requirements apply to any children's product manufactured more than 90 days after the Commission has established and published notice of the requirements for accreditation of third-party conformity assessment bodies to assess conformity with a children's product safety rule to which such children's product is submitted. Accordingly, although the effective date of the rule for both children's and non-children's subject magnet products is 30 days after publication of the rule, the effective date for application of 16 CFR part 1112 is 90 days after the publication of the rule. Testing laboratories that meet the requirements of a CPSC-accepted third party conformity assessment body will have 90 days to become accredited to include 16 CFR part 1262, *Safety Standard for Magnets,* in the scope of the accreditation to test subject magnet products that are children's product for compliance with the new rule. Although all of the subject magnet products must comply with the standard, for children's products such as children's jewelry, that are not currently subject to the mandatory standard under ASTM F963–17, testing laboratories must go through the process of applying for accreditation and obtaining approval to become a CPSC-accepted third party conformity assessment body. We conclude that 90 days provides sufficient time for testing laboratories to apply for and comply with the CPSC's procedures. Accordingly, the notice of requirements will go into effect December 20, 2022.

XVIII. Conclusion

For the reasons stated in this preamble, the Commission concludes that subject magnet products that do not meet the requirements specified in this rule, and are not exempt from the rule, present an unreasonable risk of injury associated with ingestion of such products. The Commission finds that the rule imposes the least burdensome requirement that prevents or adequately reduces the risk of injury associated with magnet ingestions.

List of Subjects

16 CFR Part 1112

Administrative practice and procedure, Audit, Consumer protection, Reporting and recordkeeping requirements, Third-party conformity assessment body.

16 CFR Part 1262

Consumer protection, Imports, Incorporation by reference, Safety.

For the reasons discussed in the preamble, the Commission amends title 16 of the Code of Federal Regulations as follows:

PART 1112—REQUIREMENTS PERTAINING TO THIRD PARTY CONFORMITY ASSESSMENT BODIES

■ 1. The authority citation for part 1112 continues to read as follows:

Authority: Pub. L. 110–314, section 3, 122 Stat. 3016, 3017 (2008); 15 U.S.C. 2063.

■ 2. Amend § 1112.15 by adding paragraph (b)(52) to read as follows:

§ 1112.15 When can a third party conformity assessment body apply for CPSC acceptance for a particular CPSC rule or test method?

* * * * *

(b) * * *

(52) 16 CFR part 1262, Safety Standard for Magnets.

* * * * *

■ 3. Add part 1262 to read as follows:

PART 1262—SAFETY STANDARD FOR MAGNETS

Sec.
1262.1 Scope, purpose, application, and exemptions.
1262.2 Definitions.
1262.3 Requirements.
1262.4 Test procedure for determining flux index.
1262.5 Findings.

Authority: 15 U.S.C. 2056, 2058.

§ 1262.1 Scope, purpose, application, and exemptions.

(a) *Scope and purpose.* This part, a consumer product safety standard, prescribes the safety requirements for a *subject magnet product,* as defined in § 1262.2(b). These requirements are intended to reduce or eliminate an unreasonable risk of death or injury to consumers who ingest one or more *hazardous magnets* (as defined in § 1262.2(a)) from a *subject magnet product.*

(b) *Application.* Except as provided in paragraph (c) of this section, all *subject magnet products* that are manufactured after October 21, 2022, are subject to the requirements of this part.

(c) *Exemption.* The following consumer products are exempt from the requirements of this part: Toys that are subject to 16 CFR part 1250.

§ 1262.2 Definitions.

The following definitions apply for purposes of this part:

(a) *Hazardous magnet* means a magnet that fits entirely within the cylinder described in 16 CFR 1501.4 and that has a flux index of 50 kG^2 mm^2 or more when tested in accordance with the method described in 1262.4.

(b) *Subject magnet product* means a consumer product that is designed, marketed, or intended to be used for

[31] The CPSC did not propose an anti-stockpiling provision, but sought comments in the NPR on whether to include one in the rule. No commenter supported inclusion of anti-stockpiling language. Given the absence of record support as well as the relatively brief 30-day effective date period, CPSC finds it unnecessary to provide such a provision in the final rule.

entertainment, jewelry (including children's jewelry), mental stimulation, stress relief, or a combination of these purposes, and that contains one or more loose or separable magnets, but does not include products sold and/or distributed solely to school educators, researchers, professionals, and/or commercial or industrial users exclusively for educational, research, professional, commercial, and/or industrial purposes.

§ 1262.3 Requirements.

Each loose or separable magnet in a *subject magnet product* that fits entirely within the cylinder described in 16 CFR 1501.4 must have a flux index of less than 50 kG^2 mm^2 when tested in accordance with the method described in § 1262.4.

§ 1262.4 Test procedure for determining flux index.

(a) Select at least one loose or separable magnet of each shape and size in the *subject magnet product.*

(b) Measure the flux index of each selected magnet in accordance with the procedure in section 8.25.1 through 8.25.3 of ASTM F963–17, *Standard Consumer Safety Specification for Toy Safety,* approved on May 1, 2017. The Director of the Federal Register approves this incorporation by reference in accordance with 5 U.S.C. 552(a) and 1 CFR part 51. You may obtain a copy from ASTM International, 100 Barr Harbor Drive, P.O. Box C700, West Conshohocken, PA 19428–2959; phone: (610) 832–9585; *www.astm.org.* A read-only copy of the standard is available for viewing on the ASTM website at *www.astm.org/READINGLIBRARY/.* You may inspect a copy at the Office of the Secretary, U.S. Consumer Product Safety Commission, 4330 East West Highway, Bethesda, MD 20814, telephone (301) 504–7479, email: *cpsc-os@cpsc.gov,* or at the National Archives and Records Administration (NARA). For information on the availability of this material at NARA, email *fr.inspection@nara.gov,* or go to: *www.archives.gov/federal-register/cfr/ibr-locations.html.*

§ 1262.5 Findings.

(a) *General.* Section 9(f) of the Consumer Product Safety Act (15 U.S.C. 2058(f)) requires the Commission to make findings concerning the following topics and to include the findings in the rule.

(b) *Degree and nature of the risk of injury.* (1) The standard is designed to reduce the risk of death and injury associated with magnet ingestions. There were an estimated 26,600 magnet ingestions were treated in hospital EDs from January 1, 2010, through December 31, 2021. There were an estimated 5,000 magnet ingestions treated in U.S. hospital EDs between January 1, 2010, and December 31, 2021, that involved in-scope identified subject magnet products, and an additional estimated 20,000 ED-treated magnet ingestions involving unidentified magnet products, which are likely to have involved subject magnet products. There were an estimated 2,500 ED-treated ingestions of magnets from identified magnet products in year 2021, higher than the majority of the preceding years, including 2018 through 2020. In this same period, January 1, 2010, through December 31, 2021, there were an estimated 286 CPSRMS-reported magnet ingestions involving identified subject magnet products and 76 CPSRMS-reported magnet ingestions involving unidentified subject magnet products. In addition, based on NEISS annual estimates from 2017–2021, ICM showed that there were an additional estimated 263 magnet ingestion injuries per year involving identified subject magnet products, which were treated in medical settings other than EDs (185 injuries treated outside of hospitals and 78 resulted in direct hospital admission).

(2) The potential injuries when a child or teen ingests one or more hazardous magnets are serious. Health threats posed by hazardous magnet ingestion include pressure necrosis, volvulus, bowel obstruction, bleeding, fistulae, ischemia, inflammation, perforation, peritonitis, sepsis, ileus, ulceration, aspiration, and death, among others. These conditions can result from magnets attracting to each other through internal body tissue, or a single magnet attracting to a ferromagnetic object. CPSC is aware of serious injuries and several fatal magnet ingestion incidents that occurred in the United States, resulting from internal interaction of magnets.

(c) *Number of consumer products subject to the rule.* The CPSC estimates that there are approximately 500,000 subject magnet products sold annually in the United States. However, to account for a range of sales estimates, staff provided information for sales ranging from 100,000 to 1 million units annually.

(d) *The need of the public for subject magnet products and the effects of the rule on their cost, availability, and utility.* (1) Consumers use subject magnet products for entertainment, mental stimulation, stress relief, and jewelry. The rule requires subject magnet products to meet performance requirements regarding size or strength, but it does not restrict the design of products. As such, subject magnet products that meet the standard can continue to serve the purpose of amusement or jewelry for consumers. Magnets that comply with the performance requirements of the rule, such as non-separable magnets, larger magnets, weaker magnets, or non-permanent magnets, may be useful for amusement or jewelry. However, it is possible that there may be some negative effect on the utility of subject magnet products if compliant products function differently or do not include certain desired characteristics.

(2) Retail prices of subject magnet products generally average under $20. CPSC has identified subject magnet products that comply with the rule, and the prices of compliant and non-compliant products are comparable.

(3) If the costs associated with redesigning or modifying subject magnet products to comply with the rule results in manufacturers discontinuing products, there may be some loss in availability to consumers. However, this would be mitigated to the extent that compliant products meet the same consumer needs, and there are compliant products currently available for sale to consumers.

(4) Manufacturers may sell complying products to mitigate costs. In addition to products that comply with the performance requirements, there are products that are not subject to the performance requirements. Products sold and/or distributed solely to school educators, researchers, professionals, and/or commercial or industrial users exclusively for educational, research, professional, commercial, and/or industrial purposes are not subject magnet products, and firms may continue to manufacture, sell, and distribute such magnet products.

(e) *Other means to achieve the objective of the rule while minimizing adverse effects on competition, manufacturing, and commercial practices.* The Commission considered other alternatives that might reduce the impact of a rule on small businesses, including promulgating an alternative set of requirements for the flux index or size of the magnets; requiring safer packaging; requiring warnings on the packaging and promotional materials; requiring aversive agents on magnets; relying on voluntary standards; delaying the effective date; and taking no action. Although each of the alternative actions would have lower costs and less impact on small business, none is likely to significantly reduce the injuries associated with ingestion of magnets from subject magnet products.

(f) *Unreasonable risk.* (1) Incident data indicate that there were an estimated 25,000 magnet ingestions treated in U.S. hospital EDs from January 1, 2010, to December 31, 2021, which involved in-scope magnet products. Of these estimated 25,000 ED-treated magnet ingestions, an estimated 5,000 involved in-scope identified subject magnet products, and an estimated 20,000 involved ''unidentified'' magnet product types that, based on incident data and factors considered by the Commission, are likely to be subject magnet products. During 2017 through 2021, based on the NEISS annual estimate of about 481 magnet injuries initially treated in hospital EDs involving in-scope identified magnets there were 320 injuries that were treated and released and 161 injuries that required hospitalization. Additionally, based on estimates from the ICM, 185 injuries were treated outside of hospitals annually and another 78 injuries resulted in direct hospital admission. These incidents indicate the frequency with which children and teens ingest magnets, and the need to address the magnet ingestion hazard.

(2) The potential injuries when a person ingests one or more magnets are serious. Health threats posed by magnet ingestion include pressure necrosis, volvulus, bowel obstruction, bleeding, fistulae, ischemia, inflammation, perforation, peritonitis, sepsis, ileus, ulceration, aspiration, and death, among others. These conditions can result from magnets attracting to each other through internal body tissue, or a single magnet attracting to a ferromagnetic object. Magnet ingestion incidents commonly result in hospitalization, particularly when subject magnet products are ingested. The Commission is aware of serious injuries as well as five fatal magnet ingestion incidents that occurred in the United States between November 24, 2005, and January 5, 2021. Four of these incidents involved children 2 years old or younger, and all five victims died from injuries resulting from internal interaction of the magnets. Four of the five incidents identified the products as magnet sets, amusement products, or described them as having characteristics that are consistent with subject magnet products.

(3) CPSC's trend analysis of the incident data indicates that magnet ingestions have significantly increased in recent years. In 2014, Commission issued a rule that applied to magnet sets, which are a subset of the subject magnet products addressed in this rule. The 2014 magnet sets rule took effect in April 2015 and remained in effect until it was vacated and remanded by the U.S. Court of Appeals for the Tenth Circuit Court in November 2016. *Zen Magnets, LLC* v. *Consumer Prod. Safety Comm'n.,* 841 F.3d 1141 (10th Cir. 2016). ED-treated ingestions of magnets from subject magnet products continued to rise since the 2014 magnets set rule was vacated. A review of the annual estimates for ED-treated, magnet ingestions by year, from 2010 through 2021 showed that magnet ingestions are higher for the 2017 through 2021 period, than the previous periods, with more in-scope magnet ingestions in 2021 (2,500) than most of the preceding years, including 2018 through 2020. To assess these trends further, CPSC grouped the years in relation to the vacated 2014 magnet sets rule, using three separate periods. CPSC reviewed the magnet ingestions treated in U.S. hospital EDs for the periods 2010 through 2013 (years prior to the announcement of the 2014 magnet sets rule), 2014 through 2016 (years when the 2014 magnet sets rule was announced and in effect), and 2017 through 2021 (years after the magnet set rule was vacated). For 2010–2013, there were approximately 2,300 ED-treated magnet ingestion incidents per year; for 2014–2016, there were an approximately 1,300 ED-treated magnet ingestion incidents per year; for 2017–2021, there were approximately 2,400 ED-treated magnet ingestion incidents per year. Thus, during the period when the 2014 magnet sets rule was announced and in effect (2014–2016), magnet injury ingestion estimates are lowest by a significant margin, compared with the earlier and more recent periods. CPSRMS data also showed a similar decline in incidents for the period when the magnet sets rule was announced and in effect. CPSC's assessment of incident data, as well as other researchers' assessments of NEISS data, and national poison center data, all indicated that magnet ingestion cases significantly declined during the years when the 2014 magnet sets rule was announced and in effect, compared to the periods before and after the 2014 magnet sets rule.

(4) For these reasons, the Commission finds that the rule is reasonably necessary to eliminate or reduce an unreasonable risk of injury associated with the product.

(g) *Public interest.* This rule is intended to address an unreasonable risk of injury and death posed by magnet ingestions. The Commission finds that compliance with the requirements of the rule will significantly reduce magnet ingestion deaths and injuries in the future; thus, the Commission finds that promulgation of the rule is in the public interest.

(h) *Voluntary standards.* (1) The Commission is aware of six relevant standards, four domestic and two international, that address the magnet ingestion hazard. One standard is mandatory, ASTM F963–17, *Standard Consumer Safety Specification for Toy Safety* (incorporated by reference at §§ 1262.4 and 1250.2 of this chapter). The other voluntary standards include: ASTM F2923–20, *Standard Specification for Consumer Product Safety for Children's Jewelry;* ASTM F2999–19, *Standard Consumer Safety Specification for Adult Jewelry;* ASTM F3458–21, *Standard Specification for Marketing, Packaging, and Labeling Adult Magnet Sets Containing Small, Loose, Powerful Magnets (with a Flux Index* $\geq$ *50 kG*^{2} *mm*^{2}*)* (see § 1262.4 for the availability of ASTM standards from ASTM International); EN–71–1: 2014, *Safety of Toys; Part 1: Mechanical and Physical Properties* (available from EN European Standards; Krimicka 134, 318 00 Pilsen, Czech Republic, phone: 420 377 921 379; *www.en-standard.eu*); and ISO 8124–1: 2018, *Safety of Toys—Part 1: Safety Aspects Related to Mechanical and Physical Properties* (available from International Organization for Standardization; Chemin de Blandonnet 8, CP 401–1214 Vernier, Geneva, Switzerland; phone: 41 22 749 01 11; *www.iso.org*).

(2) The Commission finds that compliance with existing standards is not likely to result in the elimination or adequate reduction of the risk of injury associated with ingestion of subject magnet products.

(i) *Relationship of benefits to costs.* (1) CPSC estimates that aggregate annual societal costs from ingestion injuries involving subject magnet products for 2017 through 2021 totaled $51.8 million, even when ingestion injuries involving unidentified magnet products are excluded. The expected costs of the rule include the lost value experienced by consumers who would no longer be able to purchase subject magnet products with loose or separable hazardous magnets, as well as the lost profits to firms that could not produce and sell non-complying products in the future. Estimates of consumer and producer surplus range from about $2 million to $3.5 million to about $20 million to $35 million, based on unit sales ranging from 100,000 to 1 million. If annual unit sales of non-complying subject magnet products are 500,000, expected aggregate benefits from the rule would total $51.8 million annually as noted above; costs (lost consumer and producer surplus) would range from $10

million to $17.5 million annually. Thus, the benefits of the rule would greatly exceed the costs.

(2) If unidentified magnet products involved in ingestion injuries, which are also likely to be subject magnet products, are considered as well, average annual societal costs for 2017 through 2021 would increase by $167.9 million. A sensitivity analysis shows that adding even a relatively small portion of NEISS cases involving unidentified magnet products to the base case substantially increases the estimated gross benefits of the rule. Although CPSC's analysis of the data, the trends in NEISS, CPSRMS, and poison center-reported, magnet-related incidents support the conclusion that the unidentified magnet products generally involved magnets considered within the scope of the rule, because CPSC does not know precisely how many of these products would fall within the scope of this rule, CPSC has not included them in the primary benefit analysis. Instead, CPSC includes the benefits from unidentified magnet products in this final rule's sensitivity analysis to illustrate the theoretical upper bounds of benefits from this rule. Theoretically, including 100 percent of these societal costs with those estimated for identified subject magnet products ($51.8 million) could yield average annual societal costs of magnet ingestion injuries of $219.7 million for the period 2017 through 2021.

(j) *Least burdensome requirement that would adequately reduce the risk of injury.* CPSC considered several less-burdensome alternatives to the rule.

(1) One alternative is to take no regulatory action and, instead, rely on existing standards to address the magnet ingestion hazard. This alternative would reduce the burden associated with the rule by avoiding a mandatory standard, but it is unlikely to adequately address the magnet ingestion hazard due to the limited scope and requirements of existing standards and uncertainty regarding compliance with them.

(2) Another alternative is a mandatory standard with less stringent requirements than the proposed rule, such as a higher flux index limit, or different requirements for certain shapes and sizes of magnets. This could reduce the burden associated with a rule by allowing firms to market a wider variety of products than under the rule. However, this alternative would reduce the safety benefits because allowing certain hazardous magnets in subject magnet products to remain on the market does not address the hazard such products pose.

(3) Safety messaging is another alternative to the rule. This alternative would reduce the burdens associated with the rule because it would not require modifying or discontinuing subject magnet products, and the costs of such warnings and instructional information likely would be small. However, this alternative is not likely to adequately reduce the magnet ingestion hazard. Incident data shows children commonly access ingested magnets from sources that do not include the product packaging where warnings are provided. Incident data, behavioral and developmental factors, and other information indicate that children and caregivers commonly disregard safety messaging regarding the magnet ingestion hazard. Finally, this approach has not been effective at adequately reducing the hazard, to date.

(4) Another alternative is to require special packaging to limit children's access to subject magnet products. Although this alternative would create some packaging costs, those costs likely would be lower than the costs of the rule because this alternative would allow subject magnet products to remain unchanged. However, this alternative is not likely to adequately reduce the risk of injury and death associated with magnet ingestions. Consumers are unlikely to repackage all magnets after each use, given the small size and large number of magnets in products, the potential to lose magnets, and consumers' underappreciation of the hazard. In addition, commercially reasonable packaging requirements would only prevent young children (typically, children under 5 years old) from accessing the product, not older children, or teens, who are involved in the majority of magnet ingestion incidents.

(5) Another alternative is to require subject magnet products to be coated with aversive agents. This alternative would reduce the burden associated with the rule because it would allow firms to continue to sell subject magnet products and the costs of such coatings likely would be small. However, such requirements are not likely to adequately address the hazard because they do not address ingestions that occur when the first magnet is placed in the victim's mouth, before the aversive agent is detected, accidental ingestions, or children who are developmentally inclined to place objects in their mouths.

(6) Another alternative is to provide a later effective date for the final rule. This may reduce the burdens associated with the rule by spreading them over a longer period, but it would also delay the safety benefits of the rule.

(7) For these reasons, the Commission finds that the rule imposes the least burdensome requirement that prevents or adequately reduces the risk of injury associated with magnet ingestions.

Alberta E. Mills,

Secretary, Consumer Product Safety Commission.

[FR Doc. 2022–20200 Filed 9–20–22; 8:45 am]

BILLING CODE 6355–01–P