DEPARTMENT OF ENERGY

10 CFR Parts 429 and 430

[EERE–2013–BT–TP–0050]

RIN 1904–AD88

Energy Conservation Program: Test Procedure for Ceiling Fans

AGENCY: Office of Energy Efficiency and Renewable Energy, Department of Energy.

ACTION: Final rule.

SUMMARY: The U.S. Department of Energy (''DOE'') is amending the test procedures for ceiling fans to include a definition for ''circulating air'' for the purpose of the ceiling fan definition; include ceiling fans greater than 24 feet within the scope of the test procedure; include certain belt-driven ceiling fans within the scope of the test procedure; specify that certain very small-diameter ceiling fans are not required to be tested; maintain applicability of the standby power test procedure to large-diameter ceiling fans; specify instructions for testing ceiling fans with certain accessories or features; clarify test voltage for large-diameter ceiling fans; amend the low speed definition and increase low speed tolerance for stability criteria; permit an alternate set-up to collect air velocity test data and provide greater specificity regarding sensor orientation; amend the blade thickness measurement requirement; update instrument measurement resolution, represented values, rounding instructions, and enforcement provisions; and codify current guidance on calculating several values reported on the EnergyGuide label. DOE is also updating references to an industry test standard to reference the latest version.

DATES: The effective date of this rule is September 15, 2022. The final rule changes will be mandatory for product testing starting February 13, 2023. The incorporation by reference of certain material listed in this rule is approved by the Director of the Federal Register as of September 15, 2022. The incorporation by reference of certain other material listed in this rule was approved by the Director of the Federal Register as of August 24, 2016 and May 27, 2021.

ADDRESSES: The docket, which includes **Federal Register** notices, webinar attendee lists and transcripts, comments, and other supporting documents/materials, is available for review at *www.regulations.gov.* All documents in the docket are listed in the *www.regulations.gov* index. However, some documents listed in the index, such as those containing information that is exempt from public disclosure, may not be publicly available.

A link to the docket web page can be found at *regulations.gov/docket/EERE-2013-BT-TP-0050.* The docket web page contains instructions on how to access all documents, including public comments, in the docket.

For further information on how to review the docket contact the Appliance and Equipment Standards Program staff at (202) 287–1445 or by email: *ApplianceStandardsQuestions@ee.doe.gov.*

FOR FURTHER INFORMATION CONTACT:

Mr. Jeremy Dommu, U.S. Department of Energy, Office of Energy Efficiency and Renewable Energy, Building Technologies Office, EE–2J, 1000 Independence Avenue SW, Washington, DC 20585–0121. Telephone: (202) 586–9870. Email *ApplianceStandardsQuestions@ee.doe.gov.*

Ms. Amelia Whiting, U.S. Department of Energy, Office of the General Counsel, GC–33, 1000 Independence Avenue SW, Washington, DC 20585–0121. Telephone: (202) 586–2588. Email: *amelia.whiting@hq.doe.gov.*

SUPPLEMENTARY INFORMATION: DOE incorporates by reference the following industry standards into part 430: ANSI/AMCA Standard 230–15 (''AMCA 230–15''), ''Laboratory Methods of Testing Air Circulating Fans for Rating and Certification'', ANSI-approved October 16, 2015, including AMCA 230–15 Technical Errata 2021–05–05, ''Technical Errata Sheet for ANSI/AMCA Standard 230–15: Density Corrections'', dated May 5, 2021. IEC 62301, Household electrical appliances—Measurement of standby power, (Edition 2.0, 2011–01).

DOE maintains previously approved incorporation by reference in part 430: ANSI/AMCA Standard 208–18 (''AMCA 208–18''), Calculation of the Fan Energy Index, ANSI approved January 24, 2018, IBR approved for appendix U to this subpart.

Copies of the AMCA standards are available from Air Movement and Control Association International, Inc. (AMCA), 30 West University Drive, Arlington Heights, IL 60004, (847) 394–0150, or by going to *www.amca.org/store.*

Copies of the IEC standard are available from International Electrotechnical Commission (IEC), 3 Rue de Varembe, Case Postale 131, 1211 Geneva 20, Switzerland, *https://webstore.iec.ch/* and from the American National Standards Institute (ANSI), 25 W 43rd Street, 4th Floor, New York, NY 10036, (212) 642–4900, *webstore.ansi.org.* For a further discussion of this standard, see section IV.N of this document.

Table of Contents

I. Authority and Background
A. Authority
B. Background
II. Synopsis of the Final Rule
III. Discussion
A. Scope of Applicability
1. Scope of Ceiling Fan Product Coverage
2. Scope of Ceiling Fan Test Procedure
B. Standards Incorporated by Reference
C. Efficiency Metric for Small-Diameter Ceiling Fans
D. Standby Power Test Procedure for Large-Diameter and High-Speed Belt-Driven Ceiling Fans
E. Specifications for Ceiling Fans With Accessories
F. Ceiling Fan Test Voltage
G. Low Speed Definition
H. Alternate Stability Criteria for Average Air Velocity Measurements
I. Sensor Arm Setup
J. Air Velocity Sensor Mounting Angle
K. Instructions To Measure Blade Thickness
L. Instrument Measurement Resolution
M. Certification, Represented Value, and Rounding Requirements
N. Product-Specific Enforcement Provisions
O. Calculation Methodology for Values Reported on the EnergyGuide Label
1. Airflow Efficiency
2. Airflow
3. Energy Use
4. Estimated Yearly Energy Cost
P. Test Procedure Costs and Impacts
1. Cost Impacts for the Scope Related Amendments
2. Cost Impacts for Stability Criteria
3. Cost Impacts for Low Speed Definition
4. Cost Impacts for Other Test Procedure Amendments
Q. Effective and Compliance Dates
IV. Procedural Issues and Regulatory Review
A. Review Under Executive Order 12866 and 13563
B. Review Under the Regulatory Flexibility Act
C. Review Under the Paperwork Reduction Act of 1995
D. Review Under the National Environmental Policy Act of 1969
E. Review Under Executive Order 13132
F. Review Under Executive Order 12988
G. Review Under the Unfunded Mandates Reform Act of 1995
H. Review Under the Treasury and General Government Appropriations Act, 1999
I. Review Under Executive Order 12630
J. Review Under Treasury and General Government Appropriations Act, 2001
K. Review Under Executive Order 13211
L. Review Under Section 32 of the Federal Energy Administration Act of 1974
M. Congressional Notification
N. Description of Materials Incorporated by Reference
V. Approval of the Office of the Secretary

I. Authority and Background

DOE is authorized to establish and amend energy conservation standards and test procedures for ceiling fans. (42 U.S.C. 6293(b)(16)(A)(i) and (B), and 42 U.S.C. 6295(ff)) DOE's energy conservation standards and test procedures for ceiling fans are currently prescribed at title 10 of the Code of Federal Regulations (''CFR''), part 430 section 32(s)(1) and (2), 10 CFR part 430 section 23(w), and 10 CFR part 430 subpart B appendix U (''appendix U''), respectively. The following sections discuss DOE's authority to establish test procedures for ceiling fans and relevant background information regarding DOE's consideration of test procedures for this product.

A. Authority

The Energy Policy and Conservation Act, as amended (''EPCA''),[1] authorizes DOE to regulate the energy efficiency of a number of consumer products and certain industrial equipment. (42 U.S.C. 6291–6317) Title III, Part B [2] of EPCA established the Energy Conservation Program for Consumer Products Other Than Automobiles, which sets forth a variety of provisions designed to improve energy efficiency. These products include ceiling fans, the subject of this document. (42 U.S.C. 6291(49), 42 U.S.C. 6293(b)(16)(A)(i) and (B), and 42 U.S.C. 6295(ff))

The energy conservation program under EPCA consists essentially of four parts: (1) testing, (2) labeling, (3) Federal energy conservation standards, and (4) certification and enforcement procedures. Relevant provisions of EPCA specifically include definitions (42 U.S.C. 6291), test procedures (42 U.S.C. 6293), labeling provisions (42 U.S.C. 6294), energy conservation standards (42 U.S.C. 6295), and the authority to require information and reports from manufacturers (42 U.S.C. 6296).

The testing requirements consist of test procedures that manufacturers of covered products must use as the basis for (1) certifying to DOE that their products comply with the applicable energy conservation standards adopted under EPCA (42 U.S.C. 6295(s)), and (2) making other representations about the efficiency of those products (42 U.S.C. 6293(c)). Similarly, DOE must use these test procedures to determine whether the products comply with any relevant standards promulgated under EPCA. (42 U.S.C. 6295(s))

Federal energy efficiency requirements for covered products established under EPCA generally supersede State laws and regulations concerning energy conservation testing, labeling, and standards. (42 U.S.C. 6297) DOE may, however, grant waivers of Federal preemption for particular State laws or regulations, in accordance with the procedures and other provisions of EPCA. (42 U.S.C. 6297(d))

Under 42 U.S.C. 6293, EPCA sets forth the criteria and procedures DOE must follow when prescribing or amending test procedures for covered products. EPCA requires that any test procedures prescribed or amended under this section shall be reasonably designed to produce test results which measure energy efficiency, energy use or estimated annual operating cost of a covered product during a representative average use cycle (as determined by the Secretary) or period of use and shall not be unduly burdensome to conduct. (42 U.S.C. 6293(b)(3))

With respect to ceiling fans, EPCA requires that test procedures be based on the ''Energy Star Testing Facility Guidance Manual: Building a Testing Facility and Performing the Solid State Test Method for ENERGY STAR Qualified Ceiling Fans, Version 1.1'' published by the Environmental Protection Agency, and that the Secretary may review and revise the test procedures established. (42 U.S.C. 6293(b)(16)(A)(i) and (B))

EPCA also requires that, at least once every 7 years, DOE evaluate test procedures for each type of covered product, including ceiling fans, to determine whether amended test procedures would more accurately or fully comply with the requirements for the test procedures to not be unduly burdensome to conduct and be reasonably designed to produce test results that reflect energy efficiency, energy use, and estimated operating costs during a representative average use cycle or period of use. (42 U.S.C. 6293(b)(1)(A) and (b)(3))

If the Secretary determines, on her own behalf or in response to a petition by any interested person, that a test procedure should be prescribed or amended, the Secretary shall promptly publish in the **Federal Register** proposed test procedures and afford interested persons an opportunity to present oral and written data, views, and arguments with respect to such procedures. The comment period on a proposed rule to amend a test procedure shall be at least 60 days and may not exceed 270 days. In prescribing or amending a test procedure, the Secretary shall take into account such information as the Secretary determines relevant to such procedure, including technological developments relating to energy use or energy efficiency of the type (or class) of covered products involved. (42 U.S.C. 6293(b)(2)). If DOE determines that test procedure revisions are not appropriate, DOE must publish its determination not to amend the test procedures. (42 U.S.C. 6293(b)(1)(A)(ii))

In addition, EPCA requires that DOE amend its test procedures for all covered products to integrate measures of standby mode and off mode energy consumption into the overall energy efficiency, energy consumption, or other energy descriptor, unless the current test procedure already incorporates the standby mode and off mode energy consumption, or if such integration is technically infeasible. (42 U.S.C. 6295(gg)(2)(A)) If an integrated test procedure is technically infeasible, DOE must prescribe separate standby mode and off mode energy use test procedures for the covered product, if a separate test is technically feasible. (*Id.*) Any such amendment must consider the most current versions of the IEC Standard 62301 [3] and IEC Standard 62087 [4] as applicable. (42 U.S.C. 6295(gg)(2)(A))

DOE is publishing this final rule in satisfaction of the 7-year review requirement specified in EPCA. (42 U.S.C. 6293(b)(1)(A))

B. Background

As stated, DOE's existing test procedures for ceiling fans appear at appendix U. On September 30, 2019, DOE published a notice of proposed rulemaking (''NOPR'') proposing amendments to the test procedure addressing questions received from interested parties. 84 FR 51440. (''September 2019 NOPR'') In the September 2019 NOPR, DOE proposed to interpret the term ''suspended from a ceiling'' in the EPCA definition of ceiling fan to mean offered for mounting only on a ceiling; specify that very small-diameter (''VSD'') ceiling fans that do not also meet the definition of low-speed small-diameter (''LSSD'') ceiling fan are not required to be tested pursuant to the DOE test method; for LSSD and VSD ceiling fans, increase the tolerance for the stability criteria for the average air velocity measurements

[1] All references to EPCA in this document refer to the statute as amended through the Energy Act of 2020, Public Law 116–260 (Dec. 27, 2020), which reflect the last statutory amendments that impact Parts A and A–1 of EPCA.

[2] For editorial reasons, upon codification in the U.S. Code, Part B was redesignated Part A.

[3] IEC 62301, *Household electrical appliances—Measurement of standby power* (Edition 2.0, 2011–01).

[4] IEC 62087, *Audio, video and related equipment—Methods of measurement for power consumption* (Edition 1.0, Parts 1–6: 2015, Part 7: 2018).

during low speed tests; specify that large-diameter ceiling fans with blade spans greater than 24 feet do not need to be tested pursuant to the DOE test method; codify current guidance on calculating several values reported on the U.S. Federal Trade Commission's (''FTC'') EnergyGuide label for LSSD and VSD ceiling fans; and amend certification requirements and product-specific enforcement provisions to reflect the current test procedures and recently amended energy conservation standards for ceiling fans. 84 FR 51440, 51442. Additionally, on October 17, 2019, DOE hosted a public meeting to present the September 2019 NOPR proposals.

DOE, with the support of the American Lighting Association (''ALA''), conducted a round robin test program for ceiling fans to observe laboratory setups and test practices, evaluate within-laboratory variation (*i.e.,* repeatability) and assess between-laboratory consistency (*i.e.,* reproducibility). Round robin testing was conducted from January 2019 to April 2020. Six test laboratories participated in the round robin, representing both manufacturer laboratories and third-party laboratories. Four laboratories were located in North America, and two were located in China. ALA and ceiling fan manufacturers supplied two samples each of five ceiling fan models (for a total of 10 test samples). The laboratories were instructed to test according to appendix U. DOE representatives were present during all testing to observe test setups and practices used in a variety of labs. The round robin test report has been separately published in the docket.[5]

On May 27, 2021, DOE published a final rule to amend the current regulations for large-diameter ceiling fans to implement technical amendments corresponding with provisions enacted by Congress through the Energy Act of 2020. 86 FR 28469 (''May 2021 Technical Amendment'') Specifically, section 1008 of the Energy Act of 2020 amended section 325(ff)(6) of EPCA to specify that large-diameter ceiling fans manufactured on or after January 21, 2020, are not required to meet minimum ceiling fan efficiency requirements in terms of the ratio of the total airflow to the total power consumption as established in a final rule published January 19, 2017 (82 FR 6826; ''January 2017 Final Rule''), and instead are required to meet specified minimum efficiency requirements based on the Ceiling Fan Energy Index (''CFEI'') metric. 86 FR 28469, 28469–28470. The May 2021 Technical Amendment also implemented conforming amendments to the ceiling fan test procedure to ensure consistency with the Energy Act of 2020. 86 FR 28469, 28470.

On December 7, 2021, DOE published a supplemental NOPR (''SNOPR'') to present modifications to certain proposals presented in the September 2019 NOPR, and to propose additional amendments based on round robin testing. 86 FR 69544 (''December 2021 SNOPR'') In the December 2021 SNOPR, DOE addressed a subset of comments received in response to the September 2019 NOPR that were relevant to the SNOPR. 86 FR 69544, 69546.

In the December 2021 SNOPR, DOE proposed to include a definition for ''circulating air'' for the purpose of the ceiling fan definition, include ceiling fans greater than 24 feet in the scope, include certain belt-driven ceiling fans within scope, include a standby metric for large-diameter ceiling fans, amend the low speed definition, permit an alternate set-up to collect air velocity test data, amend certain set-up and operation specifications, amend the blade thickness measurement requirement, and update product-specific rounding and enforcement provisions. 86 FR 69544, 69547. Additionally, on January 11, 2022, DOE hosted a public webinar to present the December 2021 SNOPR proposals.

DOE received comments in response to the September 2019 NOPR and December 2021 SNOPR from interested parties listed in Table II.1 of this document. Table II.1 reflects commenters that provided comments to the September 2019 NOPR that were not already fully addressed in the December 2021 SNOPR.

TABLE II.1—LIST OF COMMENTERS WITH WRITTEN SUBMISSIONS IN RESPONSE TO THE SEPTEMBER 2019 NOPR * AND DECEMBER 2021 SNOPR

Commenter(s)	Reference in this final rule	Document No. in docket	Commenter type
Air Movement and Control Association International	AMCA	33, 43	Trade Association.
American Lighting Association	ALA	34, 45	Trade Association.
Appliance Standards Awareness Project, American Council for an Energy-Efficient Economy, National Consumer Law Center, Energy Efficiency Advocate, New York State Energy Research and Development Authority, Northwest Energy Efficiency Alliance.	Efficiency Advocates	44	Efficiency Organizations.
Big Ass Fans	BAF	36	Manufacturer.
Hunter Fan Company	Hunter	29	Manufacturer.
Pacific Gas and Electric Company, San Diego Gas and Electric, and Southern California Edison; collectively, the California Investor-Owned Utilities.	CA IOUs	31, 46	Utilities.
VES Environmental Solution, Inc.	VES	25, 26	Manufacturer.

* The table includes only comments to the September 2019 NOPR that were not already fully addressed in the December 2021 SNOPR.

To the extent that DOE received comments relating to the energy conservation standards for ceiling fans, such comments are not discussed in this final rule as this rulemaking only addresses the test procedure. These comments will be discussed in the separate energy conservation standards rulemaking docket (EERE–2021–BT–STD–0011).

A parenthetical reference at the end of a comment quotation or paraphrase provides the location of the item in the public record.[6]

[5] The docketed round robin report can be found in the rulemaking Docket No. EERE–2013–BT–TP–0050. *www.regulations.gov/docket/EERE-2013-BT-TP-0050.*

[6] The parenthetical reference provides a reference for information located in the docket of DOE's rulemaking to develop test procedures for ceiling fans. (Docket No. EERE–2013–BT–TP–0050, which is maintained at *www.regulations.gov*). The references are arranged as follows: (commenter name, comment docket ID number, page of that document).

ALA and AMCA commented that AMCA 230–15 is currently in the process of being updated and encouraged DOE to delay finalizing the ceiling fans test procedure until the updated version of AMCA 230 is published. (ALA, No. 45 at p. 4; AMCA, No. 43 at pp. 1, 5, 10–11) DOE notes that there is no scheduled date for the finalization of the update to AMCA 230. In light of the 7-year test procedure lookback requirement of EPCA (42 U.S.C. 6293(b)(1)(A)) and the requirement that amended test procedures that impact measured energy use or efficiency be finalized at least 180 days prior to the close of the comment period for a NOPR proposing new or amended energy conservation standards or a notice of proposed determination that standards do not need to be amended (appendix A to subpart C of part 430, section (8)(d)(1)), DOE is not delaying finalization of the ceiling fans test procedure. As discussed below, DOE is updating the reference to AMCA 230–15 to include the errata sheet published May 2021.

In response the September 2019 NOPR, Hunter noted that they were grateful that DOE initiated round robin testing to remedy any issues with the test procedure. However, they also noted that DOE must be mindful when exercising enforcement and compliance because the amendments are being implemented not only before the round robin is completed, but also before company and independent labs have thoroughly considered them. (Hunter No. 29 at pp. 1–2) DOE notes that the round robin has since been completed and the round robin test report has been separately published in the docket.[7] Certain company and independent labs were involved during the round robin testing. Further, DOE also published the December 2021 SNOPR which provided additional proposals based on the round robin testing, and additional opportunities for industry to consider and comment on the proposals. As such, the amendments in this final rule are based on the proposals in the September 2019 NOPR and the December 2021 SNOPR. The effective date for the adopted test procedure amendment will be 30 days after publication of this final rule in the **Federal Register**. EPCA prescribes that all representations of energy efficiency and energy use, including those made on marketing materials and product labels, must be made in accordance with an amended test procedure, beginning 180 days after publication of the final rule in the **Federal Register**. (42 U.S.C. 6293(c)(2))

In response to the December 2021 SNOPR, ALA also encouraged DOE to conduct future round robin testing within one year of the effective date of this test procedure rulemaking and future test procedure updates. ALA also encouraged DOE to take the necessary steps to ensure that all third-party labs are producing test results within an acceptable range. (ALA, No. 45 at p. 2) DOE appreciates these comments and will consider future round robin testing as needed to inform any future test procedure amendments.

Finally, Mr. Catania (representing himself) commented that state proceedings on the commercial and industrial fans are moving forward quickly and asked DOE whether it is considering updating energy conservation standards in a federal rulemaking following the finalization of the test procedure. (Catania, Public Meeting Transcript, No. 42 at p. 41) DOE notes that this rulemaking addresses the test procedure for ceiling fans only. On October 1, 2021, DOE issued a request for information (''RFI'') seeking comment and information regarding coverage as part of a separate rulemaking for fans and blowers.[8] 86 FR 54412 (''October 2021 RFI''). Further, on February 8, 2022, DOE issued a request for information seeking comments and information regarding energy conservation standards for fans and blowers.[9] 87 FR 7048. Any discussion on test procedures (and future rulemaking for energy conservation standards) for fans and blowers will be addressed through the separate rulemakings.

II. Synopsis of the Final Rule

In this final rule, DOE provides amendments as follows:

(1) Specifies that for the purpose of the ceiling fan definition, ''circulating air'' means the discharge of air in an upward or downward direction. A ceiling fan that has a ratio of fan blade span (in inches) to maximum rotation rate (in revolutions per minute (''RPM'')) greater than 0.06 provides circulating air;

(2) Extends the scope of the test procedure to include large diameter fans with a diameter greater than 24 feet;

(3) Includes certain belt-driven ceiling fans within the scope of the test procedure;

(4) Maintains that the standby power test procedure is applicable for large-diameter ceiling fans;

(5) Clarifies test voltage requirements for large-diameter ceiling fans;

(6) Specifies test procedures for ceiling fans with accessories or features that do not relate to the ceiling fan's ability to create airflow by the rotation of the fan blades;

(7) Clarifies that VSD ceiling fans that do not also meet the definition of LSSD fan are not required to be tested pursuant to the DOE test method;

(8) Modifies the low-speed definition to ensure that LSSD ceiling fans (including VSD ceiling fans that also meet the definition of an LSSD fan) are tested at a more representative low speed rather than the ''lowest available ceiling fan speed'';

(9) Increases the tolerance for the stability criteria for the average air velocity measurements at low speed for LSSD and VSD ceiling fans that also meet the definition of an LSSD fan;

(10) Allows use of an alternative procedure for air velocity data collection that relies on a two-arm sensor arm setup, and requires setups with arm rotation to stabilize the arm prior to data collection;

(11) Clarifies the alignment of air velocity sensor placement on the sensor arm(s);

(12) Specifies the instructions to measure blade thickness for LSSD and HSSD ceiling fan definitions;

(13) Specifies instrument measurement resolution;

(14) Amends represented values, rounding, and enforcement provisions; and

(15) Codifies in regulation existing guidance on the method for calculating several values reported on the FTC EnergyGuide label for LSSD and VSD ceiling fans using results from the ceiling fan test procedures in appendix U and represented values in 10 CFR part 429;

As discussed, DOE is also updating the reference to AMCA 230–15 to reference the version that includes the 2021 errata sheet. The adopted amendments are summarized in Table II.1 of this document compared to the test procedure provision prior to the amendment, as well as the reason for the adopted change.

[7] The docketed round robin report can be found in the rulemaking Docket No. EERE–2013–BT–TP–0050. *www.regulations.gov/docket/EERE-2013-BT-TP-0050.*

[8] *See* Docket No. EERE–2021–BT–TP–0021 at *www.regulations.gov.*

[9] *See* Docket No. EERE–2022–BT–STD–0002 at *www.regulations.gov.*

TABLE II.1—SUMMARY OF CHANGES IN THE AMENDED TEST PROCEDURE

DOE test procedure prior to amendment	Amended test procedure	Attribution
Defines ''ceiling fan'' based on EPCA as ''a nonportable device that is suspended from a ceiling for circulating air via the rotation of fan blades.''	Defines the term ''circulating air'' for the purpose of the ceiling fan definition to mean ''the discharge of air in an upward or downward direction. A ceiling fan that has a ratio of fan blade span (in inches) to maximum rotation rate (in revolutions per minute) greater than 0.06 provides circulating air.''	Response to industry comments.
Excludes large diameter fans with a diameter of greater than 24 feet from the test procedure.	Includes large diameter fans with a diameter of greater than 24 feet in the scope of the test procedure.	Response to industry comments.
Excludes all belt-driven ceiling fans from the test procedure.	Includes definitions and test procedures for high-speed belt-driven ceiling fans.	Response to industry comments.
Provides a method of testing only those VSD ceiling fans that meet the LSSD ceiling fan definition.	Specifies that VSD ceiling fans that are not also LSSD ceiling fans are not required to be tested pursuant to the DOE test method.	Clarification of test procedure scope.
Includes a standby power test procedure, but no standby power metric, for the large-diameter ceiling fan CFEI metric. Prior to the Energy Act of 2020, the applicable metric for large-diameter ceiling fans included a measurement of standby power.	Amends appendix U to include a standby power metric for large-diameter ceiling fans.	42 U.S.C. 6295(gg)(2)(A) requires test procedures for all products to include standby mode and off mode energy consumption.
Does not include specific instructions on how ceiling fan accessories and/or features should be incorporated into the test procedure.	Specifies that accessories or features that do not relate to the ceiling fan's ability to create airflow by the rotation of the fan blades must be installed, but turned off during testing. If such an accessory or feature cannot be turned off, it shall be set to the lowest energy-consuming mode during testing.	Improve representativeness and reproducibility of the test procedure.
Provides potentially ambiguous language for supply voltage specifications for testing large-diameter ceiling fans.	Provides clarification for supply voltage specification. The clarification does not change the original requirement.	Response to stakeholder comment.
Defines ''low speed'' as ''the lowest available ceiling fan speed, *i.e.,* the fan speed corresponding to the minimum, non-zero, blade RPM.''	Defines ''low speed'' by representing the proposed definition as a table, indicating the number of sensors that must measure greater than 40 feet per minute.	Improve the repeatability, reproducibility, and representativeness of the test procedure.
The tolerance for the stability criteria for the average air velocity measurements for LSSD and VSD ceiling fans at low speed is less than 5 percent.	Increases the tolerance for the stability criteria for the average air velocity measurements for LSSD and VSD ceiling fans at low speed to less than ten 10 percent.	Response to waiver; improve repeatability of test results.
Prescribes either a four-arm or one-arm sensor setup, for certain fan types.	Adds an alternative two-arm setup to measure air velocity. Further, adds requirement for setups that require arm rotation to stabilize the arm to dissipate any residual turbulence prior to data collection.	Improve the repeatability and reproducibility of the test procedure.
Does not explicitly specify air velocity sensor alignment or acceptance angle.	Provides explicit instructions to align the air velocity sensors perpendicular to the airflow.	Improve the repeatability and reproducibility of the test procedure.
Does not specify how fan blade thickness should be measured.	Adds specification to measure fan blade thickness in a consistent manner for all fan blade types (including ''rolled-edge'' blade designs).	Improve the repeatability and reproducibility of the test procedure.
Does not include any measurement tolerances for certain parameters and represented values and associated rounding requirements.	Updates measurement tolerances for certain parameters. Also updates represented value calculations and rounding requirements.	Include represented value and rounding requirements for current standards.
Includes product-specific enforcement provisions.	Add provisions for verification of represented values to be used in the context of enforcement of the relevant efficiency standards.	Include enforcement requirements for current standards.
Instruction on calculating EnergyGuide label values based on measurements taken in accordance with appendix U is provided in a guidance document separate from the CFR.	Codifies the instructions for calculating EnergyGuide label values in the CFR.	Improve ease of use of the test procedure.
Incorporates by reference AMCA 230–15, ANSI approved October 16, 2015.	Updates reference to edition including the errata sheet published June 2021.	Update to industry test standard.

DOE has determined that the amendments described in section III and adopted in this document would not require re-testing for a majority of ceiling fans. The amendment redefining ''low speed'' may require retesting for a limited number of LSSD ceiling fans. However, DOE expects that the amendments would be more reasonably designed to produce results that are representative of average use at low speed. Discussion of DOE's actions are addressed in detail in section III of this document, including test procedure costs and cost savings.

The effective date for the amended test procedures adopted in this final rule is 30 days after publication of this document in the **Federal Register**. Representations of energy use or energy efficiency must be based on testing in accordance with the amended test procedures beginning 180 days after the publication of this final rule.

III. Discussion

A. Scope of Applicability

EPCA defines ''ceiling fan'' as ''a nonportable device that is suspended from a ceiling for circulating air via the rotation of fan blades.'' (42 U.S.C. 6291(49)) DOE codified the statutory definition in 10 CFR 430.2. In a final rule published July 25, 2016 (''July 2016 Final Rule''), DOE stated that the test procedure applies to any product meeting this definition, including hugger fans, fans designed for applications where large airflow volume may be needed, and highly decorative fans. 81 FR 48619, 48622. DOE stated, however, that manufacturers were not required to test the following fans according to the test procedure: belt-driven ceiling fans, centrifugal ceiling fans, oscillating ceiling fans, and ceiling fans whose blades' plane of rotation cannot be within 45 degrees of horizontal. *Id.*

1. Scope of Ceiling Fan Product Coverage

In the September 2019 NOPR, DOE proposed to clarify its interpretation of the statutory definition in response to an inquiry from AMCA regarding the application of the term ''ceiling fan'' to products known as ''air circulating fan heads'' (''ACFHs'').[10] 84 FR 51440, 51443. In letters submitted to DOE in May and July of 2019, AMCA asserted that air circulating fan heads have distinct characteristics and functions compared to traditional ceiling fans, including that air circulating fan heads provide concentrated directional airflow as opposed to circulating air.[11] (AMCA, No. 23 in *both May and July 2019 letters,* at p. 1) AMCA recommended that DOE use the physical characteristics of fan diameter and rotational tip speed or outlet air speed as a means to distinguish fans that circulate air (as necessary to meet the statutory definition of ''ceiling fan'') from ACFHs that provide directional air flow (*i.e.,* fans excluded from the statutory definition of ''ceiling fan'').[12] (AMCA, No. 23 *in the July 2019 letter* at p. 2) Accordingly, in the September 2019 NOPR, DOE proposed to clarify the definition of ''ceiling fan'' and proposed two alternate definitions of the term to distinguish a ''ceiling fan'' from other fans based on the ''non-portable'' element and ''suspended from a ceiling'' (*i.e.,* ''mounting'') element of the statutory definition. 84 FR 51440, 51444. Specifically, DOE proposed to include within the definition that for purposes of the definition, the term ''suspended from a ceiling'' means offered for mounting on a ceiling, and the term ''nonportable'' means not offered for mounting on a surface other than a ceiling.'' *Id.*

In response to the September 2019 NOPR, commenters were generally opposed to using a mounting element as a distinction stating it was too broad and could create loopholes. (ALA, No. 34 at p. 2; AMCA, No. 33 at pp. 2–3; Hunter No. 29 at p. 2) Multiple interested parties recommended that the definition of ceiling fan be based on, in part, a ratio of diameter to maximum operating speed in order to separate fans that circulate air from those that provide directional airflow. (Hunter Fans, BAFs, Public Meeting Transcript, No. 28 at pp. 33–35, AMCA, No. 33 at pp. 3–6; ALA, No. 34 at p. 2; and Hunter No. 29 at p. 2) Specifically, these commenters suggested that a diameter-to-maximum operating speed ratio less than 0.06 inches/RPM could be used to distinguish products that are not ceiling fans. *Id.*

In the December 2021 SNOPR, DOE proposed to define the term ''circulating air'' as it is used in the ceiling fan definition and to include a specification that a ceiling fan with a maximum operating speed ratio of greater than 0.06 in/RPM is considered to provide circulating air. 86 FR 69544, 69550. DOE stated that EPCA does not define ''circulating air,'' but that the term can generally be understood as the discharge of air in an upward or downward direction with the air returning to the intake side of the fan, *i.e.,* the air is circulated within a space. *Id.* In contrast, directional airflow targets the discharged air at a specific location and the discharged air does not return to the intake side of the fan, *i.e.,* directional airflow moves air, but does not circulate it within the space. *Id.* A fan that provides directional airflow, as opposed to ''circulating air'', would not be a ''ceiling fan'' as that term is defined in EPCA. *Id.* DOE tentatively concluded that the diameter-to-maximum operating speed ratio of 0.06 in/RPM is appropriate to distinguish fans with directional airflow from circulating airflow. *Id.*

DOE also noted in the December 2021 SNOPR that the ceiling fan design standards of EPCA would not be applicable to fans that do not meet the criteria of the proposed definition. 86 FR 69544, 69551. Specifically, EPCA requires all ceiling fans manufactured after January 1, 2007, to have: (i) fan speed controls separate from any lighting controls; (ii) adjustable speed controls (either more than 1 speed or variable speed); and (iii) the capability of reversible fan action, except for fans sold for industrial applications, fans sold for outdoor applications, and cases in which safety standards would be violated by the use of the reversible mode. (86 FR 69544, 69551; 42 U.S.C. 6295(ff)(1)(A)) The energy conservation standards established by DOE would also not be applicable to such products. 86 FR 69544, 69551.

In response to the December 2021 SNOPR, ALA and AMCA both commented that they support DOE's definition of ''circulating air''. (AMCA, No. 43 at p. 2; ALA, No. 45 at p. 2) ALA noted its hope that the inclusion of a definition of ''circulating air'' would effectively remove ACFHs from the scope of ceiling fans. (ALA, No. 45 at p. 2) AMCA also specifically indicated its support for the 0.06-in/RPM threshold ratio proposed in the December 2021 SNOPR and cited public data indicating that all products they identified as ACFHs were below the 0.06 ratio. (AMCA, No. 43 at p. 2–3) Based on these data, AMCA commented that a threshold of 0.06 in/RPM for the diameter-to-maximum-operating-speed ratio was appropriate to separate ACFH from ceiling fans. (*Id.;* see also AMCA, Public Meeting Transcript, No. 42 at p. 21)

Further, AMCA commented that it may be better to define ''circulating air'' separately in appendix U, so that it can be used in other fan definitions, such as the commercial and industrial fans and blowers rulemaking. (AMCA, No. 43 at p. 4) AMCA also commented that the definition will be examined during the update of AMCA 230. (AMCA, No. 43 at p. 2)

DOE notes that this rulemaking is focused on definitions and test procedures relevant to ceiling fans, and thus is determining a definition for ''circulating air'' specifically in the context of the ceiling fan definition. DOE also acknowledges that AMCA 230 is currently under review and were AMCA 230 to adopt a different approach to delineating ceiling fans

[10] Section 5.1.1 of ANSI/AMCA Standard 230–15 (''AMCA 230–15''), ''Laboratory Methods of Testing Air Circulating Fans for Rating and Certification,'' defines *air circulating fan head* as ''an assembly consisting of a motor, impeller and guard for mounting on a pedestal having a base and column, wall mount bracket, ceiling mount bracket, I-beam bracket or other commonly accepted mounting means.''

[11] The May and July 2019 letters are available at *www.regulations.gov/document?D=EERE-2013-BT-TP-0050-0023.*

[12] AMCA specifically recommended the use of tip speed, which is calculated as blade diameter × 3.14159 × rotational speed in RPM, and suggested that the maximum tip speed of a ceiling fan would be 4,000 feet per minute. See May 2019 letter, page 2.

from other fan products, DOE may consider such an approach in a future rulemaking.

The CA IOUs suggested that DOE not attempt to define ''circulating air'' within its ceiling fans definition. (CA IOUs, No. 46 at p. 2) The CA IOUs commented that DOE's proposed definition puts too much emphasis on fan setup and room configuration, rather than the attributes of the fan itself. (*Id.*) They stated that a ceiling fan in a large, open warehouse would not have air directly returning to the intake side of the fan, whereas an ACFH in a small room may have air directly returning to the intake side of the fan, such that the proposed definition of circulating air may not be able to provide the intended clarity. (*Id.*)

The CA IOUs also suggested a modified ceiling fan definition: Ceiling fan means a nonportable device that can be suspended from a ceiling or overhead support for the purpose of circulating air via the rotation of fan blades. A ceiling fan has a ratio of fan blade span (in inches) to maximum rotation rate (in revolutions per minute) greater than 0.06. (CA IOUs, No. 46 at p. 2) The CA IOUs expressed concern that in many commercial and industrial applications, ceiling fans are mounted from an overhead support rather than directly suspended from a ceiling, and that the manufacturer will most likely not know whether their products will be suspended from a ceiling or another type of overhead support during the product design phase. (*Id.*) Accordingly, the CA IOUs commented that including the phrase ''or overhead support'' would avoid an unintended interpretation that the type of structure from which the fan is suspended determines coverage. (*Id.*) They suggested that there is a strong precedent for DOE to address EPCA-derived uncertainty to provide a clearer and more comprehensive definition, as DOE did for the definition of showerheads in its October 22, 2013 test procedure final rule. (*Id.*)

The Efficiency Advocates commented that the phrase ''suspended from a ceiling'' may create a loophole for fans with alternative mounting hardware and recommend that DOE clarify that any fan ''packaged with hardware for such an installation'' and/or ''marketed for such an installation'' be covered. (Efficiency Advocates, No. 44 at p. 4)

DOE notes that manufacturers cannot always anticipate the fan setup, room configuration, or overhead support for a particular ceiling fan installation. DOE expects that any ceiling fan that could be installed from an overhead support would also be able to be installed from a ceiling.[13] As a general matter, DOE notes its authority generally applies to products as manufactured and not at point of installation. (See generally 42 U.S.C. 6302) Any fan that is distributed in commerce with components that enable it to be suspended from a ceiling, and that meets the ceiling fan definition in terms of being a non-portable device and for circulating air (as defined by this final rule) via the rotation of fan blades, is a ceiling fan.

Additionally, DOE recognizes that whether air flow is returned to the fan intake may be dependent on the installation environment. Accordingly, DOE has removed the phrase ''with air returning to the intake side of the fan'' from the adopted definition for ''circulating air'' for the purpose of the ceiling fans definition. However, the definition adopted in this final rule continues to specify a diameter-to-maximum operating speed ratio to distinguish between fans that generally are designed to circulate air from those fans generally designed to provide directional air flow. As stated, DOE has determined, as supported by commenters, that the threshold of 0.06 in/RPM provides the appropriate distinction.

For the reasons discussed previously and in consideration of comments received, in this final rule, DOE adopts the following definition for ''circulating air'' for the purpose of the ceiling fan definition:

(1) Circulating Air means the discharge of air in an upward or downward direction. A ceiling fan that has a ratio of fan blade span (in inches) to maximum rotation rate (in revolutions per minute) greater than 0.06 provides circulating air.

(2) For all other ceiling fan related definitions, see appendix U to this subpart.

AMCA (represented by Mr. Catania at the time) suggested during the September 2019 NOPR public meeting that DOE consider including in Appendix U visual images as examples (with disclaiming language) of the applicable fans in scope. (AMCA, Public Meeting Transcript, No. 28 at p. 14) Westinghouse (represented by Mr. Gatto) also agreed with AMCA's comments and suggested that DOE could consider providing a separate guidance document that provides clear examples of in-scope ceiling fans. (Westinghouse, Public Meeting Transcript, No. 28 at p. 16) DOE appreciates the recommendations, but notes that examples and pictures could be interpreted differently by different stakeholders. DOE prefers to rely on physical features of the product when establishing definitions and scope. Accordingly, at this point DOE is not considering a separate guidance document that includes visual representations of in-scope ceiling fans. Any specific questions about scope and test can be sent to *ApplianceStandardsQuestions@ee.doe.gov.*

2. Scope of Ceiling Fan Test Procedure

Section 2 of appendix U specifies that the ceiling fan test procedure applies to ceiling fans except:

(1) Ceiling fans where the plane of rotation of a ceiling fan's blades is not less than or equal to 45 degrees from horizontal, or cannot be adjusted based on the manufacturer's specifications to be less than or equal to 45 degrees from horizontal;

(2) Centrifugal ceiling fans;

(3) Belt-driven ceiling fans; and

(4) Oscillating ceiling fans.

Section 1.6 of appendix U defines ''centrifugal ceiling fan'' as ''a ceiling fan for which the primary airflow direction is in the same plane as the rotation of the fan blades.'' Section 1.3 of appendix U defines ''belt-driven ceiling fan'' as ''a ceiling fan with a series of one or more fan heads, each driven by a belt connected to one or more motors that are located outside of the fan head.'' Section 1.16 of appendix U (renumbered as section 1.17 in this final rule) defines ''oscillating ceiling fan'' as ''a ceiling fan containing one or more fan heads for which the axis of rotation of the fan blades cannot remain in a fixed position relative to the ceiling. Such fans have no inherent means by which to disable the oscillating function separate from the fan blade rotation.''

DOE received comments regarding the scope of the ceiling fan test procedure and exemptions. AMCA commented that there should continue to be an exception for ceiling fans whose plane of rotation exceeds 45 degrees. (AMCA, No. 33 at p. 8) The CA IOUs recommended that DOE monitor for excessive energy use groups of ceiling fans that are not regulated, such as belt-driven fans and ceiling fans whose blades' plane of rotation cannot be within 45 degrees of the horizontal. (CA IOUs, No. 31 at p. 3)

In this final rule, DOE makes no changes to the exclusion of centrifugal ceiling fans; oscillating ceiling fans; and ceiling fans where the plane of rotation

[13] DOE understands that a ceiling fan is installed from a junction box that is attached to a structural beam. Therefore, it is not the dry wall or plaster of a ceiling that supports the ceiling fan. Accordingly, DOE concludes that a ceiling fan could as easily be installed from a structural beam/support without the dry wall/plaster.

of a ceiling fan's blades is not less than or equal to 45 degrees from horizontal, or cannot be adjusted based on the manufacturer's specifications to be less than or equal to 45 degrees from horizontal; as specified in section 2 of appendix U. As discussed further in section III.A.2.b of this document, DOE is amending the scope of the test procedure with regard to belt-driven ceiling fans.

VES stated that it is considering updating its belt-driven ceiling fans to direct drive fans (which are primarily shrouded), which would eliminate belt losses and boost motor efficiency. VES asserted that these ceiling fans would then be captured by the HSSD definition and therefore be subject to minimum efficiency standards that these ceiling fans would be unable to meet. VES recommended that ceiling fans with an orifice shroud surrounding the impeller or with adjustable discharge dampers be exempt from the rulemaking. (VES, No. 26 at pp. 1–2)

Regarding the scope of the ceiling fan test procedure, if a shrouded ceiling fan meets the definition of ceiling fan as amended by this final rule, it would be considered a ceiling fan and would be subject to the design standards, test procedure, and applicable energy conservation standards. DOE notes that this rulemaking is with regard only to the test procedure for ceiling fans and consideration of energy conservation standards of ceiling fans is covered by a separate rulemaking (Docket number EERE–2021–BT–STD–0011).

a. Scope of Test Procedure for Large-Diameter Ceiling Fans

In the July 2016 Final Rule, DOE limited the scope of the ceiling fans test procedure to ceiling fans up to 24 feet in diameter. 81 FR 48619, 48632. DOE explained that it was not aware of any commercially available LDCFs with blade spans greater than 24 feet and as such could not confirm the reliability of test procedure results for these LDCFs. Thus, section 3.4.1 of appendix U specifies that the test procedure for large-diameter ceiling fans (''LDCFs'') is applicable for ceiling fans up to 24 feet in diameter. As such, LDCFs with diameters greater than 24 feet have not been subject to energy conservation standards. .

In the December 2021 SNOPR, DOE proposed to remove the 24-foot blade span limit in section 3.4.1 of appendix U. 86 FR 69544, 69551. This proposal was based on two primary factors. First, because DOE's test procedure for LDCFs is based on AMCA 230–15, nothing inherent to the test procedure would prevent testing of a ceiling fan greater than 24 feet. AMCA 230–15 provides minimum clearances as a function of blade span and does not specify an upper limit on blade span. Second, AMCA confirmed that the test facilities AMCA uses are capable of accommodating ceiling fans with blade spans substantially larger than 24 feet. 86 FR 69544, 69551; see also AMCA, No. 43 at p. 4)

AMCA, the Efficiency Advocates, and the CA IOUs agreed with DOE's proposal to remove the 24-foot blade span limit. (AMCA, No. 43 at p. 4; Efficiency Advocates, No. 44 at p. 2; CA IOUs, No. 46 at p.1; AMCA, Public Meeting Transcript, No. 42 at p. 23) AMCA commented that there is at least one LDCF on the market with a blade span greater than 24 feet, and that there is no additional test burden for testing a ceiling fan with a blade span greater than 24 feet relative to testing a ceiling fan with a blade span of 24 feet. (AMCA, No. 43 at pp. 4, 12–13)

DOE did not receive any comments objecting to its proposal to remove the 24-foot blade span limit. Further, while DOE is aware of two LDCF models with a diameter greater than 24 feet, DOE understands that these models are already tested using the DOE test procedure.[14] Therefore, elimination of the 24-foot threshold from the test procedure update will not add any test burden.

For the reasons discussed, in this final rule DOE is removing the 24-foot blade span limit in section 3.4.1 of appendix U, which expands the scope of the test procedure for LDCFs to ceiling fans having a blade span larger than 24 feet. As such, representations of energy efficiency and energy use made with respect to LDCFs, including those with blade spans larger than 24 feet, must be made in accordance with this final rule beginning 180 days after publication of the final rule in the **Federal Register**. (42 U.S.C. 6293(c)(2)) DOE will address any potential changes to the scope of standards for LDCFs in a separate rulemaking.

b. Scope of Test Procedure for Belt-Driven Ceiling Fans

Section 1.3 of appendix U defines a ''belt-driven ceiling fan'' as ''a ceiling fan with a series of one or more fan heads, each driven by a belt connected to one or more motors that are located outside of the fan head.'' In the December 2021 SNOPR, DOE proposed to amend the test procedure to include a type of high-speed, single-head, belt-driven ceiling fan, which stakeholders identified as having come onto the market since belt-driven ceiling fans had been excluded from energy conservation standards. 86 FR 69544, 69552. DOE stated that unlike other belt-driven ceiling fans, high-speed, single-head, belt-driven ceiling fans are not customizable, and the fan head can be isolated for testing. DOE noted that, in contrast to the low-speed multiple head belt-driven ceiling fans, these designs allow single-head belt-driven ceiling fans to be tested using the test procedures in appendix U. 86 FR 69544, 69552.

Accordingly, DOE proposed to define high-speed belt-driven (''HSBD'') ceiling fan as a small-diameter ceiling fan that is a belt-driven ceiling fan with one fan head, and has tip speeds greater than or equal to 5000 feet per minute. *Id.* DOE notes that in its proposal, ''greater than or equal to 5000 feet per minute'' was consistent with the tip speed identified by stakeholders as corresponding to a new type of belt-driven fan that had come to market with a larger motor and higher tip speeds. 86 FR 69544, 69551–69552. However, in the December 2021 SNOPR, DOE also suggested that it would consider other tip speed thresholds. *Id.*

DOE also stated that it had identified at least one belt-driven ceiling fan with a marketed blade span of greater than 7 feet. DOE proposed to define large-diameter belt-driven (''LDBD'') ceiling fan as a belt-driven ceiling fan with one fan head that has a represented value of blade span, as determined in 10 CFR 429.32(a)(3)(i), greater than seven feet. *Id.* Further, DOE also suggested that it may consider a combined term and definition for all belt-driven ceiling fans that meet the scope of HSBD and LDBD ceiling fans. DOE discussed that by removing ''small-diameter'' in the definition, the alternate HSBD definition should accommodate belt-driven ceiling fans with blade spans greater than seven feet. *Id.*

Generally, the CA IOUs, ALA, and the Efficiency Advocates commented that they supported expanding the scope of the test procedure to cover high-speed, single-head, belt-driven ceiling fans. (CA IOUs, No. 46 at pp. 2–3; ALA, No. 45 at p. 2; Efficiency Advocates, No. 44 at pp. 1–2) The Efficiency Advocates commented that they believe covering HSBD and LDBDs provides a level

[14] DOE acknowledges that in the December 2021 SNOPR, in the context of the Paperwork Reduction Act analysis, DOE stated that it reviewed the market for ceiling fans with a diameter greater than 24 feet and identified 4 models currently being offered for sale by 2 manufacturers. 86 FR 69544, 69562. To clarify, the identified ceiling fans had the potential for a diameter greater than 24 feet. DOE assumed 4 models having a diameter greater than 24 feet. Upon further review, DOE has since concluded that only two models have a diameter greater than 24 feet.

playing field for manufacturers and permits purchasers to make informed decisions. (Efficiency Advocates, No. 44 at pp. 1–2) Regarding coverage of LDBDs, AMCA commented that they are only aware of one LDBD ceiling fan and stated that there is no reason for it to be excluded from other large-diameter ceiling fans based solely on drive type. (AMCA, No. 43 at p. 5) AMCA added that the large-diameter ceiling fan product class already includes both gear-driven and direct-drive ceiling fans, such that adding LDBD ceiling fans would be consistent with current requirements. (AMCA, No. 43 at p. 5) The CA IOUs commented that DOE should avoid creating a separate product class for LDBD fans and should instead include them with large-diameter ceiling fans because they will have the same metric and should be held to the same standard. (CA IOUs, No. 46 at p. 3) ALA agreed that LDBDs should be included with large-diameter ceiling fans. (ALA, No. 42 at p. 10)

ALA commented that they supported DOE not proposing a test procedure for low-speed belt-driven ceiling fans. (ALA, Public Meeting Transcript, No. 42 at p. 27)

Based on comment received and further review, DOE has not identified any unique applications for LDBDs as compared to HSBDs. Both DOE and commenters have only identified one ceiling fan that would meet the definition of LDBD. Further, the one LDBD identified is marketed for similar applications to all other HSBDs. Given that both types of fans serve the same application and can be tested according to the same procedures, in this final rule, DOE is adopting a definition for HSBD that removes any distinction based on diameter.

DOE notes there are not currently energy conservation standards that would be applicable to HSBD ceiling fans and that it is currently evaluating potential energy conservation standards for HSBD ceiling fans in a separate energy conservation standards rulemaking (*See* docket EERE–2021–BT–STD–0011). As part of that rulemaking, DOE will consider whether it is technologically feasible and economically justified to establish energy conservation standards for HSBDs.

Regarding the proposed tip speed threshold for the HSBD definition, AMCA and ALA both recommended that DOE align the tip speed threshold with the existing blade thickness and tip speed thresholds separating HSSD and LSSD ceiling fans.[15] (AMCA, No. 43 at p. 5; ALA No. 45 at p. 2) AMCA commented that it supports the definition because there is a lack of reliable performance data for HSBD, the use of a consistent tip-speed threshold (*i.e.,* the tip-speed threshold used for the current HSSD and LSSD definitions) might be more appropriate. (AMCA, No. 43 at p. 5) ALA further commented that all low-speed, multiple head belt-driven ceiling fans should remain exempted from testing requirements. (ALA, No. 45 at p. 2)

The tip-speed thresholds used to separate LSSD and HSSD ceiling fans, as defined in section 1.13 of appendix U (renumbered as section 1.14 in this final rule) and section 1.8 of appendix U, respectively, generally align with the tip-speed thresholds defined by industry safety standard UL 507–2017, ''Standard for Electric Fans,'' which specifies that ceiling fans with tip speeds higher than the threshold cannot be installed below ten feet without a ceiling fan guard. Given this, and in lieu of any additional performance data beyond the initial stakeholder comment that formed the basis of DOE's proposal in the December 2021 SNOPR, DOE agrees with AMCA and ALA that the tip speed used to differentiate HSSD from LSSD ceiling fans would provide a more justifiable and appropriate tip speed to distinguish belt-driven ceiling fans that are high speed from those that are low speed because it aligns with existing ceiling fan safety standards. In this final rule, DOE defines the tip-speed threshold for HSBD ceiling fans consistent with the thresholds differentiating HSSD and LSSD ceiling fans.

In the December 2021 SNOPR, DOE noted that the airflow of HSBD fans was much higher than other small-diameter ceiling fans and because of that, the small-diameter ceiling fan test procedure (*i.e.,* using sensor arm setup) could be problematic. 86 FR 69544, 69552. As such, DOE proposed to test all HSBD fans according to section 3.4 of appendix U, which references AMCA 230–15. DOE requested comment on its proposed test method. *Id.* Related, DOE proposed requiring the use of the CFEI metric, rather than a cubic feet per minute (''CFM'') per Watt (''W'') metric (''CFM/W''), to characterize the energy efficiency of HSBD ceiling fans. 86 FR 69544, 69553.

AMCA commented that because of the relatively high airflow of HSBD ceiling fans, AMCA 230 is the most appropriate test procedure and therefore supported using that standard to test HSBD ceiling fans. (AMCA, No. 43 at p. 5) AMCA stated that they did not have estimated operating speeds and hours for HSBD ceiling fans, which would be needed for a CFM/W metric, and supported use of the CFEI metric for HSBD fans. (AMCA, No. 43 at pp. 5–6) The Efficiency Advocates supported the use of CFEI for all belt-driven ceiling fans, including high-speed and/or large diameter belt-driven ceiling fans given that the airflows are more similar to large-diameter ceiling fans. (Efficiency Advocates, No. 44 at pp. 1–2)

DOE did not receive any comments in opposition to testing HSBD ceiling fans using AMCA 230–15 or calculating efficiency based on CFEI. In this final rule, DOE is amending appendix U to specify that HSBD ceiling fans are to be tested using AMCA 230–15 and have efficiency calculated based on CFEI.

In the December 2021 SNOPR, DOE proposed to require HSBDs capable of only single-speed operation to be tested at only high speed and for HSBDs capable of variable speed operation to be tested at high speed and 40-percent speed. 86 FR 69544, 69553.

AMCA, CA IOUs and the Efficiency Advocates noted that all ceiling fans are required to meet the design conditions prescribed by EPCA, which require multi-speed operation. (AMCA, No. 43 at p. 7; CA IOUs, No. 46 at pp. 2–3; Efficiency Advocates, No. 44 at p. 2–3; ASAP, Public Meeting Transcript, No. 42 at p. 25) The CA IOUs asked that DOE clarify that all ceiling fans, including belt-driven ceiling fans, centrifugal ceiling fan, oscillating ceiling fans, or ceiling fans whose blades' plane of rotation cannot be within 45 degrees of horizontal, still need to meet the ceiling fan design requirements. (CA IOUs, No. 46 at p. 3) The Efficiency Advocates stated that one of EPCA's requirement is that all ceiling fans manufactured after January 1, 2007, are required to have adjustable speed controls and that DOE should clarify how testing of single-speed BDCFs interacts with the EPCA requirements. (Efficiency Advocates, No. 44 at pp. 2–3) These commenters are correct that all ceiling fans manufactured on or after January 1, 2007 are required to meet the design standards specified at 10 CFR 430.32(s)(1), including the requirement to have adjustable speed controls. As such, all HSBDs sold on the market must be capable of variable speed operation and the proposed provisions

[15] While there is no tip speed threshold for a ceiling fan with a blade thickness less than 3.2mm, at or above 3.2mm, the tip speed thresholds vary from 2,400 fpm to 3,200 fpm to 4,000 fpm, depending on direction of airflow and blade thickness. See HSSD and LSSD ceiling fan definitions in section 1 of appendix U.

pertaining to HSBDs capable of only single speed operation are superfluous). Accordingly, in this final rule, DOE is adopting language requiring HSBDs to be tested at both high speed and 40 percent speed or the nearest speed that is not less than 40 percent speed.

DOE notes there are not currently energy conservation standards that would be applicable to HSBD ceiling fans. As such, and as discussed further in section III.Q of this document, the coverage of HSBD ceiling fans under the test procedure does not require that these fans be subject to such testing. Were a manufacturer to voluntarily make representations of the energy efficiency of such fans, any such representation would be required to be based on testing in accordance with the DOE test procedure and such representation must fairly disclose the results of such testing. (42 U.S.C. 6293(c)(1))

c. Scope of Test Procedure for VSD Ceiling Fans

Appendix U prescribes a test method for LSSD and HSSD ceiling fans, but does not explicitly prescribe a test method for VSD ceiling fans. The HSSD ceiling fan definition excludes VSD ceiling fans. As such, appendix U provides a method of testing only those VSD ceiling fans that meet the LSSD ceiling fan definition. In the September 2019 NOPR, DOE proposed to specify explicitly that VSD ceiling fans that do not also meet the definition of LSSD fan are not required to be tested pursuant to the DOE test method for purposes of demonstrating compliance with DOE's energy conservation standards for ceiling fans or representations of efficiency. 84 FR 51440, 51445. DOE requested comments on this proposal. *Id.*

ALA, Hunter and AMCA supported DOE's proposal to exclude VSD ceiling fans that do not meet the definition of LSSD. (ALA, No. 45 at p. 1; Hunter, No. 29 at p. 3; ALA, No. 34 at p. 3; AMCA, No. 33 at p. 8)

For the reasons discussed, in this final rule, DOE is adopting the more explicit specification that VSD ceiling fans that do not meet the definition of LSSD ceiling fan are not required to be tested pursuant to appendix U. In other words, only VSD ceiling fans that meet the definition of LSSD fan are required to be tested using appendix U. DOE notes, however, that all VSD ceiling fans are still required to meet the design standards specified in 10 CFR 430.32(s).

The Efficiency Advocates, which includes ASAP, encouraged DOE to cover VSD fans that are not LSSD ceiling fans in the separate fans and blowers rulemaking, especially the VSD fans that have a diameter-to-maximum operating speed ratio less than 0.06. (Efficiency Advocates, No. 44 at p. 4; ASAP, Public Meeting Transcript, No. 42 at p. 36) ASAP explained that the physical characteristics of these higher-speed VSD ceiling fans are more similar to air-circulating fan heads. (ASAP, Public Meeting Transcript, No. 42 at p. 36) On October 1, 2021, DOE issued a request for information (''RFI'') seeking comment and information regarding coverage as part of a separate rulemaking for fans and blowers.[16] 86 FR 54412 (''October 2021 RFI''). The October 2021 RFI included discussion of ACFHs, which as discussed in section III.A.1 of this document, generally have a ratio of fan blade span to maximum rotation rate less than 0.06 in/RPM and therefore are not considered to provide ''circulating air'' as defined by this final rule (and therefore do not meet the definition of ceiling fan). 86 FR 54412, 54414. DOE will consider any further comments regarding coverage of ACFHs as part of the fans and blowers rulemaking.

B. Standards Incorporated by Reference

Appendix U references certain provisions of the industry test standards AMCA 208–18 and AMCA 230–15, both of which are incorporated by reference. *See* 10 CFR 430.3(b)(2) and (4).

As discussed in the December 2021 SNOPR, DOE was made aware that AMCA 230–15 was inconsistent in its conversion of measurements to standard air density. 86 FR 69544, 69551. Whereas calculated thrust is converted to standard air density (Section 9.3 of AMCA 230–15), electric input power is not. Thrust (which is used to determine airflow in CFM) and electric input power are inputs to the CFEI metric described in AMCA 208–18. Therefore, without the correction, the same fan can have different values for CFEI depending on the density of the air where the fan is being tested.

On May 5, 2021, AMCA made a correction to address the inconsistency in the industry standard in the form of a technical errata sheet for AMCA 230–15.[17] The technical errata sheet details that the corrections listed in the errata sheet apply to all copies of AMCA 230–15. In response to the December 2021 SNOPR, AMCA stated that it supports the technical errata sheet for AMCA 230–15 being treated as a part of AMCA 230–15. (AMCA, No. 43 at p. 11)

In this final rule, DOE is updating the incorporation by reference of AMCA 230–15 to include the 2021 technical errata sheet. In addition, DOE is implementing organizational changes whereby DOE is incorporating the entirety of AMCA 230–15 at 10 CFR 430.3 and providing a new index within appendix U to provide the specific provisions of AMCA 230–15, AMCA 208–18, and IEC 62301–U that apply to the DOE test procedure. This amendment is strictly organizational and has no substantive impact on the test procedure.

C. Efficiency Metric for Small-Diameter Ceiling Fans

Ceiling fan efficiency is currently expressed in terms of CFM/W for small-diameter ceiling fans (*See* section 4 of appendix U) and CFEI for large-diameter ceiling fans (section 5 of Appendix U).

VES commented that, while they accept CFM as a unit for the metric, consumers care about the speed of the air they encounter, which is more clearly conveyed by feet per minute (''FPM''). (VES, No. 25 at p. 2) DOE notes that the CFM/W metric is an industry-accepted efficiency metric for ceiling fans. DOE is not aware of any existing test procedures for ceiling fans for which the ''useful output of services'' is measured in FPM rather than CFM. Accordingly, DOE is not considering a metric based on FPM in this final rule.

The Efficiency Advocates, which includes ASAP, recommended that DOE consider a metric other than CFM/W for small-diameter ceiling fans, such as CFEI, to account for the differences in airflow. (Efficiency Advocates, No. 44 at p. 3; ASAP, Public Meeting Transcript, No. 42 at p. 17) The Efficiency Advocates explained that the minimum DOE efficiency levels for small-diameter ceiling fans are a function of diameter only and do not reflect the cubic relationship between airflow and power. As such, higher airflow fans generally have more difficulty meeting CFM/W standards compared to fans of the same diameter that provide lower airflow. The Efficiency Advocates discussed ENERGY STAR®-certified fans, which generally use similar motors, but are certified for a range of CFM/W values at a given blade span. (Efficiency Advocates, No. 44 at p. 3; ASAP, Public Meeting Transcript, No. 42 at p. 17) The Efficiency Advocates suggested DOE investigate the extent to which the large range in CFM/W rating are a product of airflow differences rather than use of technologies aimed at reducing power

[16] *See* Docket No. EERE–2021–BT–TP–0021 at *www.regulations.gov.*

[17] The publication date of the errata sheet is listed as June 2021. *See www.techstreet.com/amca/standards/amca-230-15?product_id=1904250#amendments.*

consumption. Id. The Efficiency Advocates stated that differences in airflow were problematic for LDCFs, which led to the establishment of the CFEI metric, and commented that an alternative metric like CFEI would provide similar benefits to small-diameter ceiling fans. (Efficiency Advocates, No. 44 at pp. 3–4; ASAP, Public Meeting Transcript, No. 42 at p. 18)

ALA commented that the CFEI metric is not workable for small-diameter ceiling fans in its current form and supported the continued use of the CFM/W metric for small-diameter ceiling fans. (ALA, No. 45 at p. 1)

DOE notes that the CFEI metric uses airflow constants, pressure constants, and fan efficiency constants, that were developed specifically for large-diameter ceiling fans and may not hold for small-diameter ceiling fans.[18] No similar constants exist for small-diameter ceiling fans. In the technical support document supporting the February 2022 energy conservation standards preliminary analysis,[19] DOE highlighted several additional reasons regarding why a CFEI metric would potentially not have the same advantages for small-diameter ceiling fans as it does for large-diameter ceiling fans. Specifically, DOE noted that the CFM/W metric originated in the ENERGY STAR® program in 2002.[20] As such, changing to a CFEI metric for small-diameter ceiling fans could lead to confusion in the industry. Large-diameter ceiling fans were never included in the ENERGY STAR® program and as such did not have the consumer association with the CFM/W metric. Further, DOE noted that the reduced speed controls of small-diameter ceiling fans made small-diameter ceiling fans less susceptible to gaming operating speeds to improve efficiency. Lastly, DOE noted that the reduced variability in maximum flow made it more likely that improvements in efficiency for small-diameter ceiling fans would be reflected in either a CFEI and CFM/W metric.

Regarding the Efficiency Advocates' observation that there are products certified in the ENERGY STAR® database with similar diameters and large CFM/W ranges, DOE notes that the ENERGY STAR® efficiency levels align with the max-tech efficiency levels from the energy conservation standards final rule published on January 19, 2017.[21] 82 FR 6826. In establishing those max-tech efficiency levels, DOE did not consider blade shape, as blade shape is a driver of consumer aesthetics. Further, the CFM/W metric incorporates standby power. *Id.* at 82 FR 6838 Therefore, there is expected to be a range of certified CFM/W values for small-diameter ceiling fans, even if all ceiling fans used the same motor, because manufacturers use different blade shapes and incorporate different features that consume power in standby mode. For these reasons, DOE is uncertain that an alternative metric would add value to consumers of small-diameter ceiling fans. As such, DOE has maintained use of the CFM/W metric for small-diameter ceiling fans and the CFEI metric for large-diameter ceiling fans in this final rule.

D. Standby Power Test Procedure for Large-Diameter and High-Speed Belt-Driven Ceiling Fans

As discussed, EPCA requires that amended test procedures and energy conservation standards incorporate standby mode and off mode energy use.[22] (42 U.S.C. 6295(gg)(2) and (3)) Amended test procedures must integrate standby mode and off mode energy consumption into the overall energy efficiency, energy consumption, or other energy descriptor, unless the current test procedures for a covered product already incorporate standby mode and off mode energy consumption, or such an integrated test procedure is technically infeasible, in which case the Secretary shall prescribe a separate standby mode and off mode energy use test procedure for the covered product, if technically feasible. (42 U.S.C. 6295(gg)(2)(A))

In the December 2021 SNOPR, DOE tentatively determined that it would be technically infeasible to integrate standby power with the statutory CFEI requirements, such that the integrated metric would be representative of an average period of use as required by EPCA. 86 FR 69544, 69553. DOE noted that the Energy Act of 2020 established two CFEI requirements (*i.e.,* high-speed requirement and 40-percent requirement), and each of these required metrics does not fully account for active mode energy use or efficiency. Therefore, neither metric would be appropriately representative if integrated with standby mode operation because the resulting metric would capture a portion of active mode energy and the total standby energy use, and such an integrated metric would not be representative of an average period of use. *Id.*

Considering the tentative determination that integrating standby power into the CFEI metric was technically infeasible, DOE proposed a separate metric for standby mode energy use. 86 FR 69544, 69553. Specifically, DOE proposed that the test method for power consumption in standby mode already established in section 3.6 of appendix U remain applicable to LDCFs. 86 FR 69544, 69554. DOE further proposed that while the standby power test method would remain applicable, manufacturers would not be required to test to that provision until such time as compliance is required with an energy conservation standard for standby mode. *Id.*

DOE also stated that if a CFEI metric were adopted for HSBD ceiling fans, as DOE has done in this final rule, a separate standby mode energy use metric would need to be established for HSBDs as well. *Id.* DOE proposed to measure HSBD standby power according to section 3.6 of appendix U, consistent with other types of ceiling fans. *Id.*

AMCA commented that it agrees that it is technically infeasible to incorporate standby power into the CFEI metric. (AMCA, No. 43 at p. 6; AMCA, Public Meeting Transcript, No. 42 at pp. 9, 29) AMCA stated that they will work with other stakeholders to develop one or more approaches that would be easier to measure, report and comply with and explained that they are striving to tie the standby power requirement to CFEI levels, essentially giving credit to the higher efficiency fans where their use of standby power in many cases is directly related to delivering greater overall operating efficiency and where an

[18] Air Movement and Control Associate (AMCA), *Introducing Ceiling Fan Energy Index (CFEI) and Changes to the U.S. Regulation for Large-Diameter Ceiling Fans* [White Paper], 2021. Available at: *www.amca.org/assets/resources/public/assets/uploads/Introducing_Ceiling_Fan_Energy_Index_2.pdf.*

[19] Available at Docket No. EERE–2021–BT–STD–0011–0015.

[20] U.S. Environmental Protection Agency. ENERGY STAR® Testing Facility Guidance Manual: Building a Testing Facility and Performing the Solid State Test Method for ENERGY STAR Qualified Ceiling Fans: Version 1.1. 2002. *www.energystar.gov/ia/partners/manuf_res/downloads/ceiltestfinal.pdf.*

[21] Discussion of how ENERGY STAR Version 4.0 was developed, which references DOE January 2017 Final Rule, is available at: *www.energystar.gov/products/spec/ceiling_fans_specification_version_4_0_pd.*

[22] EPCA defines ''standby mode'' as the condition in which an energy-using product is connected to a main power source, and offers one or more of the following user-oriented or protective functions: (1) the ability to facilitate the activation or deactivation of other functions (including active mode) by remote switch (including remote control), internal sensor, or timer; and (2) continuous functions, including information or status displays (including clocks), or sensor-based functions. (42 U.S.C. 6295(gg)(1)(A)(iii)) ''Off mode'' is the condition in which the ceiling fan is connected to a main power source and is not providing any standby or active mode function. (42 U.S.C. 6295(gg)(1)(A)(ii))

incorrectly designed standby power requirement might as a disincentive to improving products' operating efficiency. (AMCA, Public Meeting Transcript, No. 42 at pp. 9–10) AMCA commented that higher standby power is typically associated with smart technologies that reduce operating power consumption, operating hours, or differing drive systems that improve operating performance or reduce energy consumption. (AMCA, No. 43 at pp. 6–7) AMCA added that too strict of a maximum standby power limit would hinder implementation of innovative ''smart'' technologies that could increase overall operating energy efficiency in exchange for using modestly higher levels of standby power. AMCA proposed that a standby-power allowance be tied to CFEI levels rated at full speed, such that the higher the CFEI rating, the greater the allowance for standby power. Based on the example table provided by AMCA, an LDCF ceiling fan with CFEI rating of 1.00 would have a standby power allowance of 15 W; each 0.02 CFEI increment above 1.00 would be allowed 1 additional W of standby power (such that a CFEI rating of 1.20 would correspond with a standby power allowance of 25 W, for example). (AMCA, No. 43 at pp. 6–9) ALA urged DOE to use caution when considering a standby power metric for LDCFs. (ALA, Public Meeting Transcript, No. 42 at p. 7)

Regarding HSBDs, AMCA recommended a separate standby power requirement, but stated that data for these products is limited. (AMCA, No. 43 at p. 10; AMCA, Public Meeting Transcript, No. 42 at p. 10) AMCA also commented that adequate time will be needed before the effective date of a maximum standby power consumption, so that the most cost-effective and robust solutions can be developed. (AMCA, Public Meeting Transcript, No. 42 at p. 10)

The CA IOUs and Efficiency Advocates commented that they support DOE's proposal to add a separate standby metric for LDCFs. (CA IOUs, No. 46 at p. 1; Efficiency Advocates, No. 44 at p. 2)

DOE did not receive any comment recommending an alternative test procedure for standby power for LDCFs or HSBDs. For the reasons discussed, DOE is maintaining that standby power for LDCFs be measured according to section 3.6 of appendix U and also requiring standby power for HSBDs to be measured according to section 3.6 of appendix U. Manufacturers of LDCFs and HSBDs are not required to test to that provision until such time as compliance is required with an energy conservation standard for standby mode, as specified in the amended Note at the beginning of appendix U. Were a manufacturer to voluntarily make representations of standby power of such fans, any such representation would be required to be based on testing in accordance with the DOE test procedure and such representation must fairly disclose the results of such testing. (42 U.S.C. 6293(c)(1))

Regarding AMCA's comments suggesting standby power levels be associated with CFEI levels, energy conservation standards have not been established for standby power for LDCFs and HSBD ceiling fans. DOE will consider AMCA's comments and recommendations in its evaluation of amended energy conservation standards rulemaking, available at docket number EERE–2021–BT–STD–0011.

E. Specifications for Ceiling Fans With Accessories

Sections 3.3.1 and 3.5.1 of appendix U require that a ceiling fan's heater and light kit be installed, but not energized during the power consumption measurement. In the December 2021 SNOPR, DOE proposed to expand this language to apply more broadly to any additional accessories or features that do not relate to the ceiling fan's ability to create airflow by the rotation of the fan blades. 86 FR 69544, 69557. DOE noted that these provisions are in place to include any impact these accessories might have on airflow, but prevent any reduction of the measured airflow efficiency that would result from including power consumption that does not relate to the ceiling fan's ability to circulate air. *Id.* DOE added that this proposal would be a clarification, consistent with how manufacturers are currently testing additional accessories and requested comment on its proposal. *Id.*

The Efficiency Advocates recommended DOE require testing ceiling fan accessories and non-airflow related features in their ''as-shipped'' configuration to ensure that these features only use power when turned on by the user. The Efficiency Advocates explained that while they understand the intention of the proposal to include ceiling fan energy consumption only as it relates to air circulation, they are concerned that it could obscure the potentially significant energy consumption of these accessories. (Efficiency Advocates, No. 44 at p. 5) The Efficiency Advocates recommended that DOE consider exploring methods for provisions to take into account the energy-saving potential of accessory smart technologies, such as occupancy sensors, that reduce operating hours and saved energy overall. (Efficiency Advocates, No. 44 at pp. 4–5)

AMCA and ALA both supported testing products with additional features powered off. (AMCA, No. 43 at p. 9; ALA, No. 45 at p. 3) Regarding installation of accessories during testing of standby power, AMCA commented that there is no definition of minimum testable configuration, which complicates testing given the evolving options for controllers, occupancy sensors, line conditioners, etc. (AMCA, No. 43 at p. 8) AMCA added that large-diameter ceiling fans can be sold with multiple fans tied to a single controller and that these controllers would use more standby power than a controller designed for a single fan. (AMCA No. 43 at p. 8) AMCA proposed that DOE test with only standard accessories. (AMCA, No. 43 at p. 8) AMCA stated that optional product features should not be energized because they facilitate energy savings that are orders of magnitude greater than the associated standby losses. AMCA specifically commented that advanced human-machine interfaces, transmitters/transducers for wireless communication, connection to external automation systems, HVAC control circuitry, and occupancy sensors should be excluded from the standby power measurement. (AMCA, No. 43 at pp. 9) AMCA also stated that optional devices that serve tertiary functions beyond air circulation also should be powered off including light kits, heaters, and germicidal devices. (AMCA, No. 43 at p. 10)

DOE notes that ceiling fans typically have to be wired by the user or an installer and as such are shipped in a configuration intended to provide user friendly and safe installs. Ceiling fans and their accessories, like light kits and heaters, are typically turned on and off repeatedly in their lifetime and consumers are familiar with the process of turning them and their accessories on and off, regardless of how it is shipped. Given the installation and consumer use of ceiling fans, it is unlikely that accessories would remain in the on-position unless intended by the consumer. As such, requiring testing in their ''as-shipped'' configuration would not provide a more representative measure of energy use of the ceiling fan.

In this final rule, DOE is adopting its proposed clarification that additional features (not just heaters and light kits) are either powered off or set at the lowest energy-consuming mode during testing.

Section 3.6 of appendix U provides that when testing standby power, the

ceiling fan must remain connected to the main power supply and be in the same configuration as in active mode. As such, the clarification that additional accessories are to be installed, but powered off would apply to the standby power measurement as well. As DOE noted, the intention of this provision is to capture the impact that these additional accessories have on airflow, while preventing any reduction in efficiency associated with power consumption that does not relate to a ceiling fan's ability to circulate air. The additional accessories cited by AMCA associated with the ceiling fan controller do not impact the airflow of a ceiling fan and as such are intended to be either powered off or set to the lowest energy-consuming mode for testing. To the extent that additional accessories are a part of an upgraded controller that is not part of the default ceiling fan model, those are to be left uninstalled as they are separate add-on purchases by a consumer. This is consistent with how large-diameter ceiling fan standby power was considered in the January 2017 Final Rule (which cites 7 W of power as the average standby power for large-diameter ceiling fans, consistent with the average power measurement for default controllers, not the standby power of an upgraded controller) and is consistent with manufacturer published literature for large-diameter ceiling fan standby power consumption. 82 FR 6826, 6847.

To avoid confusion as to which controller is used for testing, in the case where multiple advanced controllers are offered, DOE is adding an additional clarification to its specifications for ceiling fan accessories. Specifically, DOE is clarifying that if the ceiling fan is offered with a default controller, test using the default controller. If multiple controllers are offered, test using the minimally functional controller. Testing using the minimally functional controller is consistent with the direction to test with accessories not energized during the power consumption measurement. Controller functions other than the minimal functions (*i.e.,* the functions necessary to operate the ceiling fan blades) are akin to accessories that do not relate to the ceiling fan's ability to create airflow by the rotation of the fan blades. This addition clarifies the existing test procedure and does not impact the test burden or measured standby power values.

Regarding ''smart'' technologies, DOE's existing test procedure for small-diameter ceiling fans incorporates estimated operating hours of a ceiling fan and uses those operating hours to derive a representative CFM/W metric by including low-speed operation, high-speed operation, and standby hours. While additional sensors may influence operating hours, DOE does not have any data indicating the degree to which these technologies would impact operating hours and no data has been provided to indicate that the current test procedure is not representative of ceiling fans with ''smart'' technologies.

To the extent that smart features are able to be turned off, DOE notes that the adopted language clarifies that any additional feature not related to airflow is to be turned off or set to set at the lowest energy-consuming mode. Therefore, smart technologies that can be disabled would not impact the efficiency as measured by DOE's test procedure.

F. Ceiling Fan Test Voltage

Sections 3.3.1(5) and 3.4.3 of appendix U provide direction for determining the supply voltage when testing a LSSD and HSSD ceiling fan, and LDCFs, respectively, based on the rated voltage of the fan. Further, sections 3.3.1(6) and 3.4.4 of appendix U provide direction for determining the supply voltage phase (either single- or multi-phase) when testing a LSSD and HSSD ceiling fan, and large-diameter ceiling fan, respectively, based on the rated supply power of the fan.

In response to the December 2021 SNOPR, AMCA commented that the current language regarding voltage and phase requirements is ambiguous in certain cases, and provided an example for a ceiling fan that can operate in single phase or three phase and is rated for operation at 100–300V. AMCA asserted that the current provisions could be interpreted to require testing with 120 V, three-phase power in the example provided, which would not seem appropriate because 120V, three-phase power does not exist in the United States. (AMCA, No. 43 at pp. 13–14)

AMCA's comments demonstrate that the language as written could be misinterpreted by test laboratories. As noted by AMCA, 120V is generally associated only with single-phase power in the United States. As such, in following the supply voltage and supply phase provisions of the test procedure, the rated supply voltage and rated supply phase should be considered together, not independently. Accordingly, for a ceiling fan that must be tested with multi-phase power, the ceiling fan's minimum rated voltage would be considered the minimum rated voltage for use with multi-phase power, not the minimum rated voltage for use with single-phase power. Any contrary interpretation would result in a combination of phase and voltage that is not representative of an average use cycle.

To prevent such misinterpretation, DOE is reordering the test procedure to present the power supply phase requirements prior to the power supply voltage requirements (renumbered as sections 3.3.1(5) and 3.4.2 in this final rule), which provides a more logical indication that the supply phase must be considered before the supply voltage. Further, DOE is adding clarification to the supply voltage provisions to explicitly state how supply voltage is considered for single-phase and multi-phase electricity (renumbered as sections 3.3.1(6) and 3.4.3 in this final rule). DOE is also explicitly stating that the test power supply should be at a frequency of 60 Hz. DOE notes that these changes are consistent with the current testing requirements and are only intended to provide further clarity to the original requirements. DOE does not expect any ceiling fans to have to be re-tested because of this clarification given that it aligns with the common industry method for rating power supply to a ceiling fan (*i.e.,* including a rated supply voltage range at each rated supply phase, not the two independently).

G. Low Speed Definition

Section 1.12 of appendix U defines ''low speed'' to mean ''the lowest available ceiling fan speed, *i.e.,* the fan speed corresponding to the minimum, non-zero, blade RPM.''

In the September 2019 NOPR, DOE noted that through round robin testing and industry inquiry, DOE is aware that the lowest available fan speed on some ceiling fans provides an extremely low rotation rate, leading to atypically low airflow. 84 FR 51440, 51446. Because of the extremely low rotation rate and atypically low airflow, consumers are unlikely to use such a setting to circulate air. *Id.* at 51447. For such products, the lowest speed available on the ceiling fan is not representative of the lowest speed for that product that can provide ''circulation of air''. Accordingly, DOE stated that it is considering modifying the definition of low speed and presented a modified definition and requested comments on the definition. *Id.*

In the December 2021 SNOPR, DOE noted that the low speed as defined for the purpose of the current DOE test procedure is not representative of the low speed required for ''circulation of air''. 86 FR 69544, 69554. Further, as

observed through round robin testing, requiring testing at the ''lowest available speed'' would be overly burdensome to test because laboratories have trouble meeting the stability criteria. *Id.* at 86 FR 695454–69555. Therefore, having considered comments, DOE proposed a definition for low speed as follows: *Low speed* means the lowest available ceiling fan speed for which fewer than half or three, whichever is fewer, sensors per individual axis are measuring less than 40 feet per minute. Alternatively, DOE considered representing the same proposed definition as a table indicating the number of sensors that must measure greater than 40 feet per minute. *Id.* at 86 FR 69555.

In response to the proposal, ALA agreed with DOE's assessment concerning the measurement of the lowest fan speed and supported the proposal to amend the definition for low speed. ALA stated that the proposed table is acceptable as well, but encouraged DOE to merge the table with the table in section 1.13 of appendix U. (ALA, No. 45 at p. 3) In the public meeting, ALA recommended that similar to the definition in section 1.13 in appendix U, they support a low-speed definition that has both written text and a table. (ALA, Public Meeting Transcript, No. 42 at p. 33) Westinghouse commented that charts are much easier for the labs and non-technical people to understand. (Westinghouse, Public Meeting Transcript, No. 42 at p. 32).

Section 1.13 of appendix U (renumbered as section 1.14 in this final rule) specifies the definition for low-speed small-diameter ceiling fan. The definition DOE proposed to update, however, is for low speed. ALA did not clarify further in their written comments how the proposed table for low speed should be incorporated into the LSSD ceiling fan definition. However, based on their comment in the public meeting, DOE understands ALA's written comments to mean that the low speed definition should combine both the proposed text and table.

As suggested by ALA, DOE considered merging the December 2021 SNOPR proposed definition with the table. DOE notes that the proposed definition and the table were different presentations of the same criteria to meet the proposed low-speed definition. The proposed definition was based on the number of sensors measuring less than 40 fpm, whereas the table was based on the number of sensors measuring at 40 fpm or greater. As suggested by Westinghouse, DOE agrees that the table presents the definition in a manner that is likely to be more clearly understood generally. As such, in this final rule, DOE is amending the definition for low speed consistent with the alternate consideration in the December 2021 SNOPR, as follows:

Low speed means the lowest available speed that meets the following criteria:

Number of sensors per individual axis as determined in section 3.2.2(6) of this appendix	Number of sensors per individual axis measuring 40 feet per minute or greater
3	2
4	3
5	3
6	4
7	4
8	5
9	6
10	7
11	8
12	9

Note that in this final rule, low speed definition is renumbered from section 1.12 to section 1.13 in appendix U. Furthermore, DOE is including explicit instructions in the test procedure to start at the lowest speed and move to the next highest speed until the low speed definition (as amended) is met. This will ensure the identification of the lowest speed of the fan that meets the low speed definition. Note that in this final rule, DOE has included these explicit instructions in steps 4a through 7 in section 3.3.2 of appendix U.

DOE expects that this amendment will reduce the total test time per unit for low speed tests for a subset of LSSD ceiling fans. As had been defined, low speed likely required laboratories to run tests for a long period before achieving the necessary stability criteria requirements. The amended test method could mitigate the occurrence of these long test runs. DOE estimates that manufacturers of LSSD ceiling fans that conduct testing in-house could save approximately 60 minutes in per-unit testing time due to the revised low speed criteria.

DOE does not expect this amendment to require retesting or to change measured efficiency for the majority of LSSD ceiling fans. However, for the small subset of LSSD ceiling fans for which the lowest speed is at an extremely low rotation rate and provides a low airflow, retesting may be required if the lowest speed does not meet the amended definition of low speed. In the instances under the amended test method for which testing at the next highest speed were to be required, testing at the next highest speed would likely result in increased power consumption, but it would also result in increased airflow. The resulting ceiling fan efficiency would be calculated by weighting the airflow and power consumption results from the high speed test (which remains unchanged) and standby/off-mode with the low speed test, resulting in a weighted average CFM/W (Equation 1, appendix U). Because the measured efficiency is a ratio of airflow and power consumption at high speed, low speed and standby/off-mode, and testing at the next highest speed would result in an increase in airflow as well as power consumption only for low speed (which has the lowest operating hours, as presented in Table 3 of appendix U), DOE expects the amended low speed definition to have an insignificant effect on ceiling fan efficiency for the applicable subset of LSSD ceiling fans.

The cost and cost saving impacts of this update are discussed in section III.P of this document.

H. Alternate Stability Criteria for Average Air Velocity Measurements

Section 3.3.2(1) of appendix U requires that the average air velocity for each sensor must vary by less than 5 percent compared to the average air velocity measured for that same sensor in a successive set of air velocity measurements. Stable measurements are required to be achieved at only high speed for HSSD ceiling fans, and at both low and high speed for LSSD ceiling fans. In the September 2019 NOPR, DOE discussed receiving several inquiries from manufacturers citing difficulties with meeting the stability criteria at low speed for certain basic models of ceiling fans. 84 FR 51440, 51446. Accordingly, DOE evaluated available test data to investigate these difficulties and to determine whether increased tolerances for air velocity stability criteria for low-speed tests could be used to reduce test burden without materially affecting the results of the test procedure. *Id.* DOE used the test data from ceiling fans tested at a third-party testing facility to compare the airflow and efficiency results of the test procedure with the 5 percent and 10 percent air velocity stability criteria applied to low speed. *Id.* DOE found that increasing the stability criteria to 10 percent for low speed would allow more fans to meet the stability criteria and reduce the number of successive measurements needed to do so without materially changing the efficiency results of the test procedure. *Id.* Therefore, in the September 2019 NOPR, DOE proposed to increase the air velocity stability criteria for testing at low speed from 5 percent to 10 percent. *Id.*

AMCA generally stated that this proposal should be able to facilitate getting viable ratings for the fans in the labs. They noted that this proposal was

a step in the right direction. (AMCA, Public Meeting Transcript, No. 28 at pp. 50–52) Hunter, BAF and ALA supported the proposal. (Hunter, No. 29 at p. 3; BAF, No. 36 at p. 2); (ALA, No. 34 at p. 3) BAF stated that it believes the proposed increase in tolerance will significantly reduce the time require to test LSSD ceiling fans. (BAF, No. 36 at p. 2) The CA IOUs commented that increasing stability criteria for air velocity measurements could change the test results. They suggested performing an analysis to determine that impact before changing the criteria. (CA IOUs, No. 31 at p. 2) The Efficiency Advocates suggested it is unclear whether the stability criteria still needs to be increased in light of the proposed change in the low-speed definition, which would make stability issues less likely. (Efficiency Advocates, No. 44 at p. 4)

In addition to the evaluation of data discussed in the September 2019 NOPR, DOE previously evaluated an increase in the low-speed stability criteria in response to a petition for a waiver from the test procedure. 83 FR 52213 (October 16, 2018). DOE granted BAF a waiver that specified an increase in low-speed stability criteria from 5 to 10 percent. *Id.* at 85 FR 52216. (Case Number 2017–011.) In the notice of petition prior to the decision and order, based on available test data, DOE found that increasing the stability criteria would allow the subject fans to meet the stability criteria and reduce the number of successive measurements needed to do so without materially changing the efficiency results. 83 FR 12726, 12729. DOE observed similar minimal impacts in the data evaluated for the September 2019 NOPR as well. 84 FR 51440, 51446. Further, the round robin report also concluded that there was minimal impact on efficiency when unstable data (*i.e.,* data that could not meet the airflow stability requirements of 5 percent of successive runs) was removed from the data set and compared to results from stable data (*i.e.,* data that met the airflow stability requirements of 5 percent of successive runs) only.[23] While the conclusion of the round robin testing is not specific to increasing stability criteria from 5 to 10 percent, it supports that calculating efficiency from unstable data does not significantly impact efficiency results. Accordingly, DOE continues to conclude that increasing the stability criteria will not materially impact efficiency results.

For these reasons, in this final rule DOE increases the air velocity stability criteria for testing at low speed from 5 percent to 10 percent, consistent with the proposal from the September 2019 NOPR. This amendment is consistent with the methodology of the alternative test method granted to BAS in the waiver decision and order. 83 FR 52213 Note in this final rule, DOE has included the updated air velocity stability criteria for testing at low speed in a new section 3.3.2(a)(1) in appendix U.

Regarding the comment from the Efficiency Advocates, DOE notes that the amended low speed definition requires only a subset of sensors per each axis to measure air velocity at 40 feet per minute or greater. Whereas, the amended stability criteria requires the average air velocity for all sensors on all axes to meet the 5 percent stability criteria. Therefore, even with the amended low speed definition, a single sensor not meeting the 5 percent stability criteria at low speed could still occur. As such, the amendment of the low-speed definition does not obviate the need for the amended stability criteria.

Finally, this final rule fulfills the regulatory requirement for DOE to publish in the **Federal Register** a notice of proposed rulemaking and subsequent final rule to amend its regulations so as to eliminate any need for the continuation of such waiver as soon as practicable. 10 CFR 430.27(l).

I. Sensor Arm Setup

To record air velocity readings, section 3.3.2 of appendix U prescribes two setups for taking airflow measurements along four perpendicular axes (designated A, B, C, and D): a single rotating sensor arm or four fixed sensor arms. If using a single rotating sensor arm, airflow readings are first measured on Axis A, followed by successive measurements on Axes B, C, and D. If using four fixed sensor arms, the readings for all four axes are measured simultaneously. See Steps 4 and 5 of section 3.3.2 of appendix U.

Comparing the single-arm and four-arm setup, DOE noted in the December 2021 SNOPR that while valid results are generally attained more quickly using the four-arm setup, the setup is more expensive because it requires at least 4 times as many sensors. 86 FR 69544, 69556. On the other hand, the single-arm setup is less expensive, but requires the rotation of the arm every 100 seconds, which disrupts the air, often increasing the time to achieve stability. *Id.*

During round robin testing, DOE personnel noted that laboratories using the single-arm setup waited approximately 30 seconds for arm vibration to dissipate before starting data collection at the new position. Accordingly, in the December 2021 SNOPR, to address stability issues in a single-arm setup, DOE proposed, based on observations from the round robin testing, to provide explicit instruction for setups that require arm rotation to stabilize the arm and allow 30 seconds between test runs for any residual turbulence to dissipate prior to data collection after each rotation. 86 FR 69544, 69556. Further, as an alternative to single- and four-arm setups, DOE also proposed to allow laboratories to rely on test setups with two arms, so that the system would need to be rotated only once to collect data for all four axes. *Id.*

ALA supported this proposal, stating that it would make testing more accurate and stable, while also allowing for the flexibility of a two-arm option. (ALA, No. 45 at p. 3) DOE did not receive any other comments regarding this proposal.

For the reasons discussed, in this final rule, DOE is adopting the December 2021 SNOPR proposal, which includes explicit arm stabilization instructions and allows use a test setup with two arms. Note that in this final rule, DOE has included these explicit instructions in steps 4a through 7 in section 3.3.2 of appendix U.

J. Air Velocity Sensor Mounting Angle

Section 3.2.2 of appendix U does not specify the applicable mounting angle of the sensors on the sensor arm. In the December 2021 SNOPR, DOE noted that air velocity is most accurately measured by aligning the velocity sensor perpendicular to the airflow path, as this is the orientation for which the airflow through the openings of the sensor is smooth and free of turbulence. 86 FR 69544, 69556. DOE discussed that during recent round robin testing, some air velocity sensors were not aligned perpendicular to the path of airflow, and that a misaligned velocity sensor could produce inaccurate air velocity measurements. *Id.* Accordingly, DOE proposed to include explicit instructions in section 3.2.2(6) of appendix U to align the air velocity sensors perpendicular to the direction of airflow. Further, DOE also stated that it would consider either updating or adding a figure to depict more clearly the alignment of the velocity sensors perpendicular to the direction of airflow. *Id.*

ALA supported the proposal to align the air velocity sensors perpendicular to

[23] *See* pages 13–14 of the round robin report available here: *www.regulations.gov/document/EERE-2013-BT-TP-0050-0038.*

the direction of airflow and to make necessary changes to Figure 2 of appendix U or create a new figure to clearly depict the proper alignment. (ALA, No. 45 at p. 3) DOE did not receive any other comments on this proposal.

For the reasons discussed, DOE is adopting the December 2021 SNOPR proposal that specifies alignment of the air velocity sensors perpendicular to the direction of airflow in section 3.2.2(6) of appendix U. Further, DOE is updating Figure 2 of appendix U (renumbered as Figure 3 by this final rule) to depict the proper alignment of sensors.

K. Instructions To Measure Blade Thickness

Sections 1.8 in appendix U and section 1.13 in appendix U (renumbered as section 1.14 in appendix U) incorporate a fan blade thickness threshold of 3.2 mm within the definitions of HSSD ceiling fan and LSSD ceiling fan, respectively. Blade edge thickness is used to distinguish product classes because it relates to safety considerations that, in turn, relate to where a ceiling fan is likely to be installed. Ceiling fans installed in commercial and industrial settings are typically installed in locations with higher ceilings, and therefore thin leading edges on the blades do not present the safety hazard that thin leading edges would present on ceiling fans that are installed at lower heights, *i.e.,* ceiling fans installed in residential settings.

Appendix U currently does not provide instruction for how to measure fan blade thickness. In the September 2019 NOPR, DOE proposed that blade edge thickness for small diameter fans be measured at the leading edge of the fan blade (*i.e.,* the edge in the forward direction) with an instrument having a measurement resolution of at least a tenth of an inch. 84 FR 51440, 51450. DOE also proposed the following instructions for measuring blade edge thickness to ensure test procedure reproducibility, given potential variations in blade characteristics: (1) Measure at the point at which the blade is thinnest along the radial length of the fan blade and is greater than or equal to one inch from the tip of the fan blade, and (2) Measure one inch from the leading edge of the fan blade. *Id.*

In response to the September 2019 NOPR, ALA expressed support for measuring blade thickness one inch from the tip of the fan blade. (ALA, No. 34 at p. 4) Westinghouse also noted their support for this proposal. (Westinghouse, Public Meeting Transcript, No. 28 at p. 77)

Following publication of the September 2019 NOPR, DOE subsequently became aware of a ''rolled-edge'' blade design on a residential ceiling fan for which the thickness of the body of the blade is less than 3.2 mm, but that has a curled shape along the leading edge, with the curl having an outer thickness greater than 3.2 mm. For such a rolled-edge blade, the blade thickness measurement procedure proposed in the September 2019 NOPR (*i.e.,* one inch from the leading edge) would indicate a ''thin blade'' despite the thicker leading edge, resulting in the fan being classified as an HSSD, which as discussed are generally non-residential fans. Conversely, measuring the thickness at the rolled edge (*i.e.,* less than one inch from the leading edge) would result in the fan being classified as an LSSD, which are generally fans installed in residential settings and would be the more appropriate designation for the model under consideration.

In order to measure blade thickness for ''rolled-edge,'' flat, tapered, and other ceiling fan blade types in a manner that would consistently classify ceiling fans with these blade types into the appropriate product class, DOE proposed in the December 2021 SNOPR to update the proposal for measuring blade thickness as follows: (1) locate the cross-section perpendicular to the fan blade's radial length, that is at least one inch from the tip of the fan blade and for which the blade is thinnest, and (2) measure the thickest point of that cross-section within one inch from the leading edge of the fan blade. 86 FR 69544, 69556–69557. DOE expected that this proposal would result in ceiling fans with ''rolled-edge'' blade designs being assigned to the appropriate product class, while having minimal effect on the blade thickness measurement of other blade types relative to the proposal in the September 2019 NOPR. 86 FR 69544, 69557.

In response to the December 2021 SNOPR proposal, ALA expressed support for the modified proposal, but noted that they do not think the update will have much of an impact on the classification of current product models. (ALA, No. 45 at p. 3)

For the reasons discussed in the December 2021 SNOPR, in this final rule DOE adds instructions to appendix U to measure the blade thickness consistent with the proposal set forth in the December 2021 SNOPR.

L. Instrument Measurement Resolution

In the September 2019 NOPR, DOE proposed amendments to appendix U to specify minimum instrument resolution for measuring blade span, blade edge thickness, and the distance between the ceiling and the lowest point of the fan blade. The proposed instrument resolutions were at least 0.25 inches, at least one tenth of an inch, and at least 0.25 inches, respectively. 84 FR 51440, 51450. Further, DOE proposed that to determine the blade span, measure the lateral distance at the resolution of the measurement instrument, using an instrument with a measurement resolution of least 0.25 inches, and then multiply this distance by two. *Id.*

In response to the September 2019 NOPR, Hunter agreed with DOE's proposal for measuring blade span as well as the proposed tolerance for measuring ceiling to blade distance. (Hunter No. 29 at pp. 4–5) ALA also agreed with DOE's proposed distance from the blade to the ceiling, and recommended that DOE require ceiling fans to be leveled prior to testing. (ALA, No. 34 at p. 4)

DOE notes that section 3.2.2 of appendix U requires the ceiling fan to be installed according to the manufacturer's installation instructions. DOE understands that ceiling fan installation manuals commonly include instructions for leveling or balancing the ceiling fan.

In the December 2021 SNOPR, DOE updated the proposal for blade edge thickness to require a measurement resolution of at least 0.001 in., based on comments received in response to the September 2019 NOPR and the understanding that most, if not all, test laboratories use calipers to measure blade edge thickness. 86 FR 69544, 69557–69558.

For the reasons discussed, in this final rule, DOE is adopting the September 2019 NOPR proposals regarding the instrument resolution for measuring blade span and the distance between the ceiling and the lowest point of the fan blade in this final rule. Further, for the reasons discussed in the prior paragraphs and the December 2021 SNOPR, DOE is adopting the December 2021 SNOPR proposal regarding the instrument resolution for blade edge thickness.

M. Certification, Represented Value, and Rounding Requirements

The procedures required for determination, certification, and enforcement of compliance of covered products with the applicable conservation standards are set forth in 10 CFR part 429.

In the September 2019 NOPR, DOE proposed to amend certain certification requirements for ceiling fans to include

product-specific information that would be required to certify compliance with the amended energy conservation standards established in January 2017 Final Rule. 84 FR 51440, 51450.

In response to the September 2019 NOPR, ALA commented that the certification template should be updated such that manufacturers can continue to submit data to a single location, DOE's Compliance Certification Management System. (ALA, No. 34 at p. 4) Hunter agreed that certification reports should include product-specific information for the public, and stated that proper tolerances must to considered due to instrument resolution and production line tolerances. (Hunter, No. 29 at p. 4) Westinghouse Lighting appreciated that DOE proposed to clarify specific methods of measurement. (Westinghouse, Public Meeting Transcript, No. 28 at p. 75) BAF agreed with the proposals for certification requirements, and requested that air flow and power at high speed for large-diameter ceiling fans be added to DOE's certification database for public (preferred) or private access. (BAF, Public Meeting Transcript, No. 28 at p. 75–76; BAF, No. 36 at p. 2) AMCA commented that certification reports for LDCFs also include airflow and power at high speed as these are the most commonly used by manufacturers in marketing and the performance data requested by consumers. (AMCA, No. 33 at p. 9)

In response to the December 2021 SNOPR, the Efficiency Advocates expressed support for DOE's proposal to require certification reports to include all relevant information required to certify that products meet standards. (Efficiency Advocates, No. 44 at p. 2) The Efficiency Advocates encouraged DOE to also publish additional information publicly such as airflow (CFM) and tip speed (ft/min) to assist stakeholders and consumers in understanding the relative energy efficiency of ceiling fans across a broad range of product characteristics. (Efficiency Advocates, No. 44 at p. 2)

Since the September 2019 NOPR, DOE has finalized amended certification provisions for various covered product and equipment, including ceiling fans, in a separate final rule published on July 22, 2022 (''July 2022 Certification Final Rule'').[24] 87 FR 43952, 43964–43966. Further, since the September 2019 NOPR, DOE also notes that the May 2021 Technical Amendment finalized technical amendments corresponding with provisions enacted by Congress through the Energy Act of 2020 which now requires large-diameter ceiling fans to meet specified minimum efficiency requirements based on CFEI, which is different than what was originally considered in the September 2019 NOPR. 86 FR 28469, 28469–28470. The CFEI metric has since been included as part of the July 2022 Certification Final Rule. 87 FR 43952, 43965. As such, DOE is not considering the September 2019 NOPR amended certification proposals in this final rule.

In the September 2019 NOPR, DOE also proposed amendments to 10 CFR 429.32 to specify that represented values required are to be determined consistent with the test procedures in appendix U and to specify rounding requirements for represented values. 84 FR 51440, 51450. DOE proposed the following: Any represented value of blade span shall be the mean of the blade spans measured for the sample selected as described in 10 CFR 429.32(a)(1), rounded to the nearest inch; any represented value of blade RPM shall be the mean of the blade RPMs measured for the sample selected as described in 10 CFR 429.32(a)(1), rounded to the nearest RPM; any represented value of blade edge thickness shall be the mean of the blade edge thicknesses measured for the sample selected as described in 10 CFR 429.32(a)(1), rounded to the nearest tenth of an inch; and any represented value of the distance between the ceiling and the lowest point on the fan blades shall be the mean of the distances measured for the sample selected as described in 10 CFR 429.32(a)(1), rounded to the nearest quarter of an inch. *Id.* Blade span, blade edge thickness, the distance between the ceiling and the lowest point on the fan blades are used to determine the product class to which a basic model belongs. Further, DOE proposed that any represented value of tip speed is calculated as pi multiplied by the represented value of blade span divided by twelve, multiplied by the represented value of RPM, and rounded to the nearest foot per minute. 84 FR 51440, 51459.

DOE also proposed updates to the product class definitions included in appendix U to reference the proposed represented value provisions to specify that the product class for each basic model is determined using the represented values of blade span, blade RPM, blade edge thickness, the distance between the ceiling and the lowest point on the fan blades and tip speed. 84 FR 51440, 51450.

In response to comments received in response to the September 2019 NOPR, in the December 2021 SNOPR, DOE further proposed to replace the blade-edge thickness rounding proposal from nearest tenth of an inch to the nearest 0.01 inch. 86 FR 69544, 69557. Further, in the December 2021 SNOPR, DOE noted that airflow (CFM) at high speed is also product-specific information required to determine product category, and that neither 10 CFR 429.32(a)(2)(i) nor appendix U provides any rounding requirements for airflow at high speed as it relates to determining whether a ceiling fan is a highly-decorative ceiling fan. Accordingly, DOE proposed to specify that any represented value of airflow (CFM) at high speed, including the value used to determine whether a ceiling fan is a highly-decorative ceiling fan, is determined pursuant to 10 CFR 429.32(a)(2)(i) and rounded to the nearest CFM. *Id.* Finally, in the December 2021 SNOPR, DOE noted that the product class definitions proposed in the September 2019 NOPR referenced the incorrect regulatory text sections for the represented values proposed in 10 CFR 429.32. Accordingly, DOE proposed corrective updates. 86 FR 69544, 69558.

In the public meeting following the September 2019 NOPR, Westinghouse expressed a generalized concern that previously-compliant ceiling fans may become non-compliant under the representations and rounding requirements depending on how a manufacturer had been rounding. (Westinghouse, Public Meeting Transcript, No. 28 at pp. 84–86) In response to the September 2019 NOPR, Hunter agreed with the blade span rounding and with the proposed tolerances for ceiling to blade distance. (Hunter No. 29 at p. 4) ALA recommended that DOE always use the standard rounding method, meaning all numbers are rounded to the nearest whole number or whatever decimal place is required. ALA stated that defining a set rounding process would hopefully eliminate inconsistencies with the required measurements. (ALA, No. 34 at p. 4)

In response to the December 2021 SNOPR, ALA supported the airflow at high speed rounding proposal, and encouraged DOE to harmonize the test report data with data required for the EnergyGuide label and to require rounding to no more than two digits. (ALA, No. 45 at p. 3) AMCA supported DOE's proposed requirements for representations of airflow at high speed as well as the rounding specifically for large-diameter and LDBD ceiling fans. (AMCA, No. 43 at p. 10)

DOE appreciates the concern set forth by Westinghouse. The represented value and rounding requirements adopted in

[24] Rulemaking docket EERE–2012–BT–STD–0045.

this final rule are consistent with current industry and laboratory practice. In addition, comments received in response to the September 2019 NOPR and December 2021 SNOPR indicate that industry is generally in agreement with the proposed updates. Therefore, DOE does not expect the represented value and rounding requirements adopted in this final rule to impact represented values.

With regards to airflow rounding, DOE notes that the proposed amendments were consistent with the FTC EnergyGuide label and the DOE guidance document to determine the measurements needed for the FTC label.[25] The key components of the guidance document are codified in this final rule, as discussed in section III.O of this final rule.

Accordingly, in this final rule, DOE is establishing the represented value and rounding requirements proposed in the September 2019 NOPR and December 2021 SNOPR, as presented in Table III.1 of this document. Further, DOE is updating the definitions in section 1 of appendix U to reference the updated represented values.

TABLE III.1—REPRESENTED VALUE AND ROUNDING

Represented value	Represented value and rounding requirement
Blade span	Is the mean of the blade spans measured for the sample selected as described in 10 CFR 429.32(a)(1), rounded to the nearest inch.
Blade RPM	Is the mean of the blade RPMs measured for the sample selected as described in 10 CFR 429.32(a)(1), rounded to the nearest RPM.
Blade edge thickness	Is the mean of the blade edge thickness measured for the sample selected as described in 10 CFR 429.32(a)(1), rounded to the 0.01 inch.
Distance between the ceiling and the lowest point on the fan blades.	Is the mean of the distances measured for the sample selected as described in 10 CFR 429.32(a)(1), rounded to the nearest quarter of an inch.
Tip speed	Shall be pi multiplied by represented value of blade span divided by twelve multiplied by the represented value of blade RPM, rounded to the nearest foot per minute.
Airflow (CFM) at high speed	Is determined pursuant to 10 CFR 429.32(a)(2)(i) and rounded to the nearest CFM.

Hunter commented that the method for the ''determination of represented value'' as defined in 10 CFR 429.32 presents an inherent problem when calculating the represented value using the lower 90 percent confidence limit outlined in § 429.32. In their comment submission, Hunter provided an example on situations where the represented CFM, because of the LCL calculation in 10 CFR 429.32(a)(2)(i)(B), resulted in an unrealistic CFM, in some cases, the calculated CFM was negative. Accordingly, they urged DOE to consider alternate solutions to this which does not create undue burden on manufacturers. (Hunter, No. 29 at p. 6; Hunter, Public Meeting Transcript, No. 28 at p. 100–102)

The statistical calculations that resulted in the negative CFM values for the example cited by Hunter were largely the result of significant deviation in the low-speed airflow measurement between tested units. As noted previously, in response to round robin testing, DOE is adopting several provisions designed to improve the repeatability of the small-diameter ceiling fan airflow measurements, particularly at low-speeds. Specifically, DOE is adopting an alternative definition for low speed and alternative stability criteria for average air velocity measurements at low speed; including explicit sensor arm stabilization instructions; allowing the use of a test setup with two arms; and specifying mounting alignment of air velocity sensors. Taken together, these amendments will improve the repeatability of the DOE test procedure, ensuring the rated airflow is closer to the true mean airflow of the population without additional test burden.

DOE further notes that despite these provisions, it is still possible one tested sample is an outlier unit that does not represent the basic model airflow well. In this case, the statistical equations in 10 CFR 429.32 may impact the rated airflow of the product. However, DOE notes that 10 CFR 429.11(b) states that the ''minimum number of units tested shall be no less than two'' and therefore more than two units can be used to reduce the statistical variance of the measured airflow.

N. Product-Specific Enforcement Provisions

In the September 2019 NOPR, DOE proposed to add provisions to 10 CFR 429.134 for verification of the represented values in 10 CFR 429.134, to be used in the context of enforcement of the relevant efficiency standards. 84 FR 51440, 51451. The following paragraphs describe the proposed DOE verification provisions for each parameter.

DOE proposed that the represented blade span would be valid if the rounded measurement(s) (either the measured value for a single unit, or the mean of the measured values for a multiple unit sample, rounded to the nearest inch) are the same as the represented blade span. *Id.* This effectively would provide a range of approximately 1 inch that would require the same minimum ceiling fan efficiency. DOE proposed that if the represented blade span is found to be valid, that blade span would be used as the basis for calculating minimum allowable ceiling fan efficiency. *Id.* If the represented blade span were found to be invalid, the rounded measured blade span would serve as the basis for calculating the minimum allowable ceiling fan efficiency. *Id.*

DOE proposed that the represented blade RPM at high speed would be valid if the measurement(s) (either the measured value for a single unit, or the mean of the measured values for a multiple unit sample, rounded to the nearest RPM) are within the greater of 1% or 1 RPM of the represented blade RPM at high speed. *Id.* DOE proposed that, if the represented RPM were found to be valid, that RPM would be used as the basis for determining the product class. *Id.* If the certified RPM were found to be invalid, the measured RPM would serve as the basis for determining the product class. *Id.*

DOE proposed that the represented blade edge thickness would be valid if the measurement(s) (either the

[25] DOE guidance document available at *www1.eere.energy.gov/buildings/appliance_standards/pdfs/ftc_label_calc_method_2016-10-21.pdf.*

measured value for a single unit, or the mean of the measured values for a multiple unit sample, rounded to the nearest tenth of an inch) are the same as the represented blade edge thickness. *Id.* DOE proposed that, if the represented blade edge thickness were found to be valid, that blade edge thickness would be used as the basis for determining the product class. If the represented blade edge thickness were found to be invalid, the rounded measured blade edge thickness would serve as the basis for determining the product class. *Id.*

DOE proposed that the represented distance between the lowest point of the fan blades and the ceiling for each LSSD would be valid if the measurement(s) (either the measured value for a single unit, or the mean of the measured values for a multiple unit sample, rounded to the nearest quarter inch) were the same as the represented distance. *Id.* Furthermore, DOE proposed that, if the represented distance were found to be valid, that distance would be used as the basis for determining the product class. *Id.* If the represented distance were found to be invalid, the rounded measured distance would serve as the basis for determining the product class. *Id.*

In response to comments received from the September 2019 NOPR, DOE further proposed to increase the tolerance for blade RPM measurements at high speed from ±1 percent to ±2 percent to account for voltage variation and equipment resolution. 86 FR 69544, 69558.

In response to the September 2019 NOPR proposal on blade RPM tolerance, Westinghouse encouraged DOE to clarify that the RPM tolerance is only for large-diameter ceiling fans. (Westinghouse, Public Meeting Transcript, No. 28 at pp. 89–90) In response to the December 2021 SNOPR proposal, ALA supported the blade RPM tolerance proposal, and requested that DOE clarify that the blade RPM proposal only applied to large-diameter ceiling fans. (ALA, No. 45 at p. 3) AMCA also supported DOE's proposed requirements for tolerance requirements for measuring blade RPM for large-diameter ceiling fans and LDBD ceiling fans. (AMCA, No. 43 at p. 10)

DOE discussed both in the September 2019 NOPR and December 2021 SNOPR that the proposed blade RPM tolerance for product-specific enforcement purposes extends to high speed for all ceiling fans. 84 FR 51440, 51451; 86 FR 69544, 69558. Blade RPM at high speed is used to determine whether a ceiling fan may be a highly-decorative ceiling fan (section 1.9 of appendix U, renumbered as section 1.10 of appendix U in this final rule) and is used to calculate tip speed (see section III.M). The proposed tolerance was applicable to product-specific enforcement purposes only, and was not applicable to the large-diameter ceiling fan active mode RPM test requirements specified in section 3.5(2) of appendix U. Both the September 2019 NOPR and December 2021 SNOPR did not propose any changes regarding RPM tolerance as it relates to active mode testing for large-diameter ceiling fans.

In the public meeting following the September 2019 NOPR, Hunter commented that the effect of gravity can result in different blade-to-ceiling measurements depending on where along the ceiling fan blade the measurement is taken, and that DOE needs to consider this effect. (Hunter, Public Meeting Transcript, No. 28 at p. 71) In comments submitted in response to the September 2019 NOPR, Hunter stated that they agreed with the proposed tolerances for ceiling to blade distance. (Hunter No. 29 at p. 5)

As discussed in section III.M, blade to ceiling measurements are based on the distance between the lowest point of the fan blades and the ceiling. As such, any effects of gravity must be considered when measuring from the lowest point of fan blades.

In this final rule, DOE is adopting the product-specific enforcement verification provisions proposed in the September 2019 NOPR and December 2021 SNOPR, as presented in Table III.2.

TABLE III.2—PRODUCT-SPECIFIC ENFORCEMENT VERIFICATION

Represented value	Enforcement verification
Blade span	Measurement(s) (either the measured value for a single unit, or the mean of the measured values for a multiple unit sample, rounded to the nearest inch) are the same as the represented blade span.
Blade RPM	Measurement(s) (either the measured value for a single unit, or the mean of the measured values for a multiple unit sample, rounded to the nearest RPM) are within 2% of the represented blade RPM at high speed.
Blade edge thickness	If the measurement(s) (either the measured value for a single unit, or the mean of the measured values for a multiple unit sample, rounded to the 0.01 inch) are the same as the represented blade edge thickness.
Distance between the ceiling and the lowest point on the fan blades.	Measurement(s) (either the measured value for a single unit, or the mean of the measured values for a multiple unit sample, rounded to the nearest 0.25 inch) are the same as the represented distance.

O. Calculation Methodology for Values Reported on the EnergyGuide Label

FTC requires an EnergyGuide label for any covered product that is a ceiling fan, except for large diameter and HSSD ceiling fans. *See* 16 CFR 305.3(g); 16 CFR 305.21(a)(1).

The EnergyGuide label for ceiling fans reports values for four key metrics: (1) Airflow Efficiency, in CFM/W; (2) Airflow, in CFM; (3) Energy Use, in W; and (4) Estimated Yearly Energy Cost, in dollars. *See* 16 CFR 305.21(a)(1). On October 21, 2016, DOE published a guidance document explaining how to calculate these values, based on measurements taken in accordance with appendix U.[26]

In the September 2019 NOPR, DOE proposed to codify at 10 CFR 429.32(a)(3) the calculations required to determine the values presented on the EnergyGuide label for ceiling fans. 84 FR 51440, 51447.

In response to the September 2019 NOPR, Westinghouse, ALA, and BAF requested that DOE clarify that the FTC EnergyGuide Label only applies to LSSD and VSD ceiling fans, but not HSSD and large-diameter ceiling fans. (Westinghouse, Public Meeting Transcript, No. 28 at pp. 64–65; ALA, No. 34 at p. 4; BAF, No. 36 at p. 2) BAF further commented that some HSSD ceiling fans on the market have the FTC label, but that it is modified for the purposes of the HSSD fan. (BAF, Public Meeting Transcript, No. 28 at pp. 63–64) AMCA also stated that clarifying how to perform the testing and calculations for the EnergyGuide label would decrease the likelihood of error in testing. (AMCA, No. 33 at p. 8) Hunter supported the proposal to codify

[26] DOE guidance document available at *www1.eere.energy.gov/buildings/appliance_standards/pdfs/ftc_label_calc_method_2016-10-21.pdf.*

guidance for the FTC label. (Hunter, No. 29 at p. 4)

DOE notes that in the context of the FTC Energy Label Rule, ''ceiling fan'' is defined to exclude ''large-diameter and high-speed small diameter fans as defined in appendix U of subpart B of 10 CFR part 430.'' 16 CFR 305.3(g).

The CA IOUs requested that DOE work with the FTC to provide airflow and power at high and low speeds on the FTC label. The CA IOUs stated that high-speed airflow and power values are required on design documents to comply with ASHRAE standard 90.1. (CA IOUs, No. 46 at p. 4)

DOE did not receive comments on the substance of the calculations in the DOE guidance document and proposed to be codified in regulation.

DOE notes that it has no authority to make changes the FTC EnergyGuide label. DOE notes that under the FTC's Energy Label Rule, representations for ceiling fans must be derived from applicable DOE test procedures in 10 CFR parts 429 and 430. 16 CFR 305.8(c). The following sections discuss the calculation methods codified in regulation in this final rule for each of the four values presented on the EnergyGuide label.

1. Airflow Efficiency

The EnergyGuide label's Airflow Efficiency value corresponds to the ceiling fan's represented value of efficiency (*see* 10 CFR 429.32(a)), in CFM/W, which is calculated in section 4 of appendix U.

2. Airflow

For LSSD and VSD ceiling fans, the airflow value reported on the EnergyGuide label represents the weighted-average airflow of a ceiling fan, in which the weighted average is based on an average of airflow at low and high fan speeds. The weight given to each speed represents the average operating hours at that speed normalized by the total average operating hours in active mode. The average operating hours are consistent with those defined in Table 3 in appendix U. DOE is including in 10 CFR part 429 the following equation, as specified in the current guidance, to calculate this value:

$$CFM_{ave} = \frac{CFM_{Low} \times 3.0 + CFM_{High} \times 3.4}{6.4}$$

Where:

CFM_{ave} = represented value of ceiling fan airflow, rounded to the nearest CFM.

CFM_{Low} = represented value of measured airflow, in cubic feet per minute, at low fan speed, pursuant to paragraph (a)(2)(i) of this section.

CFM_{High} = represented value of measured airflow, in cubic feet per minute, at high fan speed, pursuant to paragraph (a)(2)(i) of this section.

3.0 = average daily operating hours at low fan speed, pursuant to Table 3 in appendix U.

3.4 = average daily operating hours at high fan speed, pursuant to Table 3 in appendix U.

6.4 = total average daily operating hours.

Section 3.3 of appendix U specifies the procedures for measuring the airflow at the high and low speed settings. The measurements of airflow for each setting specified by the equation above must be based on the represented value of measured airflow from a sample of at least two ceiling fans, in accordance with the requirements of 10 CFR 429.32(a)(2)(i). The represented value for airflow is then calculated using the represented value of measured airflow for each setting specified by the equation.

3. Energy Use

For LSSD and VSD ceiling fans, the energy use [27] value reported on the EnergyGuide label represents the weighted-average power consumption of the ceiling fan, in which the weighted average is based on an average of the power consumption at low and high fan speeds and in standby mode. The weight given to each speed and to standby mode corresponds to the average operating hours at that setting normalized by the total average operating hours in active mode. As with the airflow calculation, the average operating hours are consistent with those defined in Table 3 in appendix U. DOE is including in 10 CFR part 429 the following equation, as specified in the current guidance, to calculate this value:

$$W_{ave} = \frac{W_{Low} \times 3.0 + W_{High} \times 3.4 + W_{Sb} \times 17.6}{6.4}$$

Where:

W_{ave} = represented value power consumption, rounded to the nearest watt,

W_{Low} = represented value of measured power consumption, in watts, at low fan speed, pursuant to paragraph (a)(2)(ii) of this section.

W_{High} = represented value of measured power consumption, in watts, at high fan speed, pursuant to paragraph (a)(2)(ii) of this section.

W_{Sb} = represented value of measured power consumption, in watts, in standby mode, pursuant to paragraph (a)(2)(ii) of this section.

3.0 = average daily operating hours at low fan speed, pursuant to Table 3 in appendix U.

3.4 = average daily operating hours at high fan speed, pursuant to Table 3 in appendix U.

17.6 = average daily standby mode hours, pursuant to Table 3 in appendix U.

6.4 = total average daily operating hours.

Section 3.3 of appendix U outlines the procedures for measuring the power consumption at the high and low speed settings, as well as in standby mode (if applicable). The measurements of power consumption for each setting specified by the equation above must be based on the represented value of power consumption measured from a sample of at least two ceiling fans, in accordance with the requirements of 10 CFR 429.32(a)(2)(ii). The represented value of power consumption use is then calculated using the represented value of measured power consumption for each setting specified by the equation.

4. Estimated Yearly Energy Cost

For LSSD and VSD ceiling fans, estimated yearly energy cost represents the estimated cost to a consumer of the energy consumed in operating a ceiling

[27] DOE recognizes that the term ''energy use'' on the EnergyGuide label would be more accurately described as power consumption, or a *rate* of energy use.

fan for a year. Time spent at low speed, high speed, and in standby mode is based on the average operating hours listed in Table 3 in appendix U. DOE is including in 10 CFR part 429 the following equation, as specified in the current guidance, to calculate this value:

$$EYEC = \frac{W_{Low} \times 3.0 + W_{High} \times 3.4 + W_{Sb} \times 17.6}{1000} \times 365 \times C_{KWH}$$

Where:

$EYEC$ = represented value for estimated yearly energy cost, rounded to the nearest dollar,

W_{Low} = represented value of measured power consumption, in watts, at low fan speed, pursuant to paragraph (a)(2)(ii) of this section.

W_{High} = represented value of measured power consumption, in watts, at high fan speed, pursuant to paragraph (a)(2)(ii) of this section.

W_{Sb} = represented value of measured power consumption, in watts, in standby mode, pursuant to paragraph (a)(2)(ii) of this section.

C_{KWH} = representative average unit cost of electrical energy in dollars per kilowatt-hour pursuant to 16 CFR part 305.

3.0 = average daily operating hours at low fan speed, pursuant to Table 3 in appendix U.

3.4 = average daily operating hours at high fan speed, pursuant to Table 3 in appendix U.

17.6 = average daily standby mode hours, pursuant to Table 3 in appendix U.

365 = number of days per year.

1000 = conversion factor from watts to kilowatts.

In calculating this value, the daily operating hours in active mode are assumed to be 6.4 hours per day. Section 3.3 of appendix U outlines the procedures for measuring the power consumption at the high and low speed settings, as well as in standby mode (if applicable). The measurements of power consumption for each setting specified by the equation above must be based on the represented value of power consumption measured from a sample of at least two ceiling fans, in accordance with the requirements of 10 CFR 429.32(a)(2)(ii). The represented value for estimated yearly energy cost is then calculated using the represented value of measured power consumption for each setting specified by the equation.

P. Test Procedure Costs and Impacts

In this final rule, DOE is amending the existing test procedure for ceiling fans by (1) including a definition for ''circulating air'' for the purpose of the ceiling fan definition; (2) extending the scope of the test procedure to include large diameter fans with a diameter greater than 24 feet; (3) expanding the test procedure to high-speed belt-driven ceiling fans; (4) maintaining applicability of standby power for large-diameter ceiling fans; (5) clarifying test voltage requirements for large-diameter ceiling fans; (6) specifying test procedures for ceiling fans with accessories or features that do not relate to the ceiling fan's ability to create airflow by the rotation of the fan blades; (7) clarifying that VSD ceiling fans that do not also meet the definition of LSSD fan are not required to be tested pursuant to the DOE test method; (8) amending the definition for low-speed; (9) increasing the tolerance for the stability criteria for the average air velocity measurements for LSSD and VSD ceiling fans; (10) allowing two-arm sensor setup and requiring sensor arm(s) to stabilize for 30 seconds prior to rotating sensor axes; (11) clarifying air velocity sensor mounting position; (12) providing instructions to measure blade thickness; (13) amending instrument measurement resolution; (14) amending represented values, and rounding and enforcement provisions for ceiling fans; (15) codifying in regulation existing guidance on the method for calculating several values reported on the Federal Trade Commission (FTC) EnergyGuide label using results from the ceiling fan test procedures in appendix U to subpart B of 10 CFR part 430 and represented values in 10 CFR part 429; and (16) updating the reference to AMCA 230–15 to reference the version that includes the 2021 errata sheet. DOE has determined that the amended test procedure will not be unduly burdensome for manufacturers to conduct.

ALA commented that no matter how minimal the changes are to the test procedures, in most manufacturers' experience, third-party testing costs never go down. As such, they noted that any changes that requires additional testing will be a burden to manufacturers, increase costs to American consumers, and hinder research and development. (ALA, No. 45 at p. 4) Separately, ALA also generally noted in the January 11th public meeting that the costs associated with testing never goes down. (ALA, Public Meeting Transcript, No. 42 at p. 7) Further discussion of the cost impacts of the test procedure amendments are presented in the following paragraphs.

1. Cost Impacts for the Scope Related Amendments

As discussed in section III.A of this document, DOE is defining ''circulating air'' to differentiate fans for ''circulating air'' (*i.e.,* ceiling fans) from other products that are not considered to be a ceiling fan for the purposes of the EPCA definition for ceiling fans; and to include large-diameter ceiling fans greater than 24 feet in diameter and certain belt-driven ceiling fans within the scope of the test procedure.

Regarding DOE's determination to include a definition for ''circulating air,'' DOE identified that certain high-speed VSD ceiling fans with a diameter-to-maximum operating speed ratio less than 0.06 will be excluded from the ceiling fan scope. As discussed, VSD ceiling fans represent less than one percent of the total ceiling fan market. Furthermore, the segment of VSD ceiling fans that would be excluded from the ceiling fan scope would represent a portion of the less than one percent of the market. While the definition as established would likely result in a small cost savings for VSD ceiling fan manufacturers, DOE conservatively did not include these cost savings as part of the cost impact calculations.

Regarding including within the scope of the test procedure large-diameter ceiling fans greater than 24 feet in diameter, while DOE is aware of two LDCF models with a diameter greater than 24 feet (see discussion in section III.A.2.a), DOE understands that these models are already tested using the DOE test procedure. As such, DOE does not expect any test procedure cost impacts resulting from the expansion of the test procedure scope to include large-diameter ceiling fans with a diameter greater than 24 feet.

Additionally, DOE is amending the test procedure to cover certain belt-driven ceiling fans. There are no energy conservation standards applicable these certain belt-driven ceiling fans. As such, manufacturers would not be required to test such belt-driven ceiling fans according to the DOE test procedure unless a manufacturer voluntarily chooses to make representations as to the energy efficiency or energy use of such ceiling fans. Based on third-party

laboratory test cost quotes to test these belt-driven ceiling fans in accordance with AMCA 230–15, DOE estimates that it would cost manufacturers approximately $3,165 to test one HSBD unit at both high speed and 40 percent speed. DOE requires at least two units be tested. Therefore, DOE estimates it would cost manufacturers approximately $6,330 per HSBD basic model. DOE notes that the test procedure applicable under appendix U is substantively the relevant industry standard, *i.e.,* AMCA 230–15. To the extent that a manufacturer is already making representations as to the energy efficiency or energy use of such fans, DOE expects that the testing is based on AMCA 230–15, and therefore this final rule would not require additional testing.

2. Cost Impacts for Stability Criteria

This final rule includes amendments analyzed in the September 2019 NOPR increasing the tolerance for the stability criteria for the average air velocity measurements of LSSD and VSD ceiling fans that meet the definition of LSSD ceiling fans at low speed. 84 FR 51440, 51446. DOE had identified cost savings that manufacturers would likely experience from avoiding the need to purchase additional and more-costly air velocity sensors to meet the stability criteria required by the prior test procedure.

To test ceiling fans up to 84 inches in diameter with an air velocity sensor every 4 inches and in all four axes could require a manufacturer to purchase, calibrate, and install as many as 45 upgraded sensors. In this final rule, DOE estimates that this investment would be approximately $50,000 per manufacturer for these upgraded sensors. DOE estimated that at least two ceiling fan manufacturers have in-house testing facilities that would have had to invest in upgraded sensors to meet the stability criteria to comply with the current test procedure—each of which would avoid approximately $50,000 in one-time costs.

3. Cost Impacts for Low Speed Definition

As discussed in section III.F of this document, DOE is amending the low speed definition, which is required to test LSSD ceiling fans. This amendment may require retesting a subset of LSSD ceiling fans. DOE conservatively estimates that approximately 10 percent of LSSD ceiling fans with more than three speed settings will be affected by the low speed definition change and will have to be retested in active mode using the new low speed definition. Further, DOE estimates that the test procedure for LSSD ceiling fans will cost $1,500 on average per basic model active mode test.

4. Cost Impacts for Other Test Procedure Amendments

DOE does not anticipate that the remainder of the amendments in this final rule will increase test costs.

The amendment to measure standby power using the test method in section 3.6 of appendix U for LDCFs is not required until such time as compliance is required with an energy conservation standard for standby mode, unless a manufacturer voluntarily chooses to make representations as to the standby power. To the extent that a manufacturer is already making representations as to standby power of such fans, DOE expects that the testing is based on section 3.6 of appendix U, and therefore this final rule would not require additional testing. The amendment to allow a two-arm sensor setup is in addition to the single-arm and four-arm setup already allowed in appendix U. The amendment to require that the sensor arm stabilize for an extra 30 seconds before moving axes should allow for more accurate air velocity measurements, resulting in fewer repetitions to meet the stability requirement. The amendments to specify air velocity sensor mounting position, measure blade thickness, testing for ceiling fans with accessories, test voltage requirements for large diameter ceiling fans, and not requiring testing VSD ceiling fans that do not also meet the definition of LSSD fan are clarifications. The amendments for instrument measurement resolution, represented values, rounding and enforcement provisions for ceiling fans are consistent with current industry and laboratory practice. Finally, the amendments to codify the calculations required to determine the values presented on the EnergyGuide label for ceiling fans is consistent with current FTC requirements.

Q. Effective and Compliance Dates

The effective date for the adopted test procedure amendment will be 30 days after publication of this final rule in the **Federal Register**. EPCA prescribes that all representations of energy efficiency and energy use, including those made on marketing materials and product labels, must be made in accordance with an amended test procedure, beginning 180 days after publication of the final rule in the **Federal Register**. (42 U.S.C. 6293(c)(2)) EPCA provides an allowance for individual manufacturers to petition DOE for an extension of the 180-day period if the manufacturer may experience undue hardship in meeting the deadline. (42 U.S.C. 6293(c)(3)) To receive such an extension, petitions must be filed with DOE no later than 60 days before the end of the 180-day period and must detail how the manufacturer will experience undue hardship. (*Id.*) To the extent the modified test procedure adopted in this final rule is required only for the evaluation and issuance of updated efficiency standards, compliance with the amended test procedure does not require use of such modified test procedure provisions until the compliance date of updated standards.

ALA urged DOE to allow for a 180-day delay after the effective date of the test procedure for an issuance of a proposed energy conservation standard. ALA stated that while the Process Rule at 10 CFR part 430, subpart C, appendix A does not require a 180-day delay, ALA strongly believes that the waiting period is warranted should DOE decide to amend the test procedure as proposed. (ALA, No. 45 at p. 2)

This final rule is with regards to the test procedures only. DOE notes that it has published a notification of a webinar and availability of preliminary technical support document to evaluate potential energy conservation standards for ceiling fans. 87 FR 7758 (February 10, 2022). DOE has not proposed amended energy conservation standards for ceiling fans.

Upon the compliance date of test procedure provisions in this final rule any waivers or interim waivers that had been previously issued and are in effect that pertain to issues addressed by such provisions are terminated. 10 CFR 430.27(h)(3). Recipients of any such waivers are required to test the products subject to the waiver according to the amended test procedure as of the compliance date of the amended test procedure. The amendments adopted in this document in section III.I pertain to issues addressed by waivers granted to BAF, Case No. 2017–011. On October 16, 2018, DOE published a notice of a Decision and Order (Case Number 2017–011) that granted BAF a waiver from specified portions of appendix U and required BAF to test and rate specified basic models of its ceiling fans in accordance with the alternate test procedure specified in the Decision and Order. 83 FR 52213. The amendments adopted in section III.H of this final rule incorporate the same alternate stability criteria for low speed (from 5 percent to 10 percent) as provided in the Decision and Order. *Id.* at 83 FR 52216. That Decision and Order terminates on the

effective date of this final rule specified in the **DATES** heading.

IV. Procedural Issues and Regulatory Review

A. Review Under Executive Order 12866 and 13563

Executive Order (''E.O.'') 12866, ''Regulatory Planning and Review,'' as supplemented and reaffirmed by E.O. 13563, ''Improving Regulation and Regulatory Review, 76 FR 3821 (Jan. 21, 2011), requires agencies, to the extent permitted by law, to (1) propose or adopt a regulation only upon a reasoned determination that its benefits justify its costs (recognizing that some benefits and costs are difficult to quantify); (2) tailor regulations to impose the least burden on society, consistent with obtaining regulatory objectives, taking into account, among other things, and to the extent practicable, the costs of cumulative regulations; (3) select, in choosing among alternative regulatory approaches, those approaches that maximize net benefits (including potential economic, environmental, public health and safety, and other advantages; distributive impacts; and equity); (4) to the extent feasible, specify performance objectives, rather than specifying the behavior or manner of compliance that regulated entities must adopt; and (5) identify and assess available alternatives to direct regulation, including providing economic incentives to encourage the desired behavior, such as user fees or marketable permits, or providing information upon which choices can be made by the public. DOE emphasizes as well that E.O. 13563 requires agencies to use the best available techniques to quantify anticipated present and future benefits and costs as accurately as possible. In its guidance, the Office of Information and Regulatory Affairs (''OIRA'') in the Office of Management and Budget (''OMB'') has emphasized that such techniques may include identifying changing future compliance costs that might result from technological innovation or anticipated behavioral changes. For the reasons stated in the preamble, this final regulatory action is consistent with these principles.

Section 6(a) of E.O. 12866 also requires agencies to submit ''significant regulatory actions'' to OIRA for review. OIRA has determined that this final regulatory action does not constitute a ''significant regulatory action'' under section 3(f) of E.O. 12866. Accordingly, this action was not submitted to OIRA for review under E.O. 12866.

B. Review Under the Regulatory Flexibility Act

The Regulatory Flexibility Act (5 U.S.C. 601 *et seq.*) requires preparation of a final regulatory flexibility analysis (FRFA) for any final rule where the agency was first required by law to publish a proposed rule for public comment, unless the agency certifies that the rule, if promulgated, will not have a significant economic impact on a substantial number of small entities. As required by Executive Order 13272, ''Proper Consideration of Small Entities in Agency Rulemaking,'' 67 FR 53461 (August 16, 2002), DOE published procedures and policies on February 19, 2003 to ensure that the potential impacts of its rules on small entities are properly considered during the DOE rulemaking process. 68 FR 7990. DOE has made its procedures and policies available on the Office of the General Counsel's website: *www.energy.gov/gc/office-general-counsel.*

DOE has recently conducted a focused inquiry into small business manufacturers of the ceiling fans covered by this rulemaking. DOE used available public information to identify potential small manufacturers. DOE accessed the Compliance Certification Database [28] to create a list of companies that import or otherwise manufacture the ceiling fans covered by this final rule.

The following sections detail DOE's FRFA for this test procedure final rule.

1. Description of Reasons Why Action Is Being Considered

DOE is amending the existing DOE test procedures for ceiling fans. DOE shall amend test procedures with respect to any covered product, if the Secretary determines that amended test procedures would more accurately produce test results which measure energy efficiency, energy use, or estimated annual operating cost of a covered product during a representative average use cycle or period of use. (42 U.S.C. 6293(b)(1)(A))

2. Objective of, and Legal Basis for, Rule

DOE is required to review existing DOE test procedures for all covered products every 7 years. (42 U.S.C. 6293(b)(1)(A))

3. Description and Estimate of Small Entities Regulated

For manufacturers of ceiling fans, the Small Business Administration (''SBA'') has set a size threshold, which defines those entities classified as ''small businesses'' for the purposes of the statute. DOE used the SBA's small business size standards to determine whether any small entities would be subject to the requirements of the rule. *See* 13 CFR part 121. The size standards are listed by North American Industry Classification System (''NAICS'') code and industry description available at: *www.sba.gov/document/support—table-size-standards.* Ceiling fan manufacturing is classified under NAICS code 335210, ''Small Electrical Appliance Manufacturing.'' The SBA sets a threshold of 1,500 employees or less for an entity to be considered as a small business for this category.

To estimate the number of companies that manufacture ceiling fans covered by this rulemaking, DOE used data from DOE's publicly available Compliance Certification Database (''CCD''). DOE's small business search focused on companies that sell at least one LSSD ceiling fan model with more than three speed settings as well as small businesses that sell HSBD or LDBD ceiling fans, since those are the only manufacturers, large or small, that are estimated to potentially incur any costs due to the test procedure amendments.

DOE identified 10 potential domestic small businesses that manufacture at least one LSSD ceiling fan with more than three speed settings. These 10 potential domestic small businesses sell approximately 325 unique LSSD ceiling fans with more than three speed settings. Additionally, DOE identified four potential domestic small businesses that manufacture HSBD ceiling fans. These four potential domestic small businesses sell 16 known HSBD ceiling fan models. Further, while DOE is aware of two LDCF models with a diameter greater than 24 feet, DOE understands that these models are already tested using the DOE test procedure. Therefore, elimination of the 24-foot threshold from the test procedure update will not add test burden.

4. Description and Estimate of Compliance Requirements

In this final rule, DOE is amending the existing test procedure for ceiling fans by (1) including a definition for ''circulating air'' for the purpose of the ceiling fan definition; (2) extending the scope of the test procedure to include large diameter fans with a diameter greater than 24 feet; (3) expanding the test procedure to high-speed belt-driven ceiling fans; (4) maintaining applicability of standby power for large-diameter ceiling fans; (5) clarifying test voltage requirements for large-diameter

[28] U.S. Department of Energy Compliance Certification Database, available at: *www.regulations.doe.gov/certification-data/products.html#q=Product_Group_s%3A*.

ceiling fans; (6) specifying test procedures for ceiling fans with accessories or features that do not relate to the ceiling fan's ability to create airflow by the rotation of the fan blades; (7) clarifying that VSD ceiling fans that do not also meet the definition of LSSD fan are not required to be tested pursuant to the DOE test method; (8) amending the definition for low-speed; (9) increasing the tolerance for the stability criteria for the average air velocity measurements for LSSD and VSD ceiling fans; (10) allowing two-arm sensor setup and requiring sensor arm to stabilize for 30 seconds prior to rotating sensor axes; (11) clarifying air velocity sensor mounting position; (12) providing instructions to measure blade thickness; (13) amending instrument measurement resolution; (14) amending represented values, rounding and enforcement provisions for ceiling fans; (15) codifying in regulation existing guidance on the method for calculating several values reported on the Federal Trade Commission (FTC) EnergyGuide label using results from the ceiling fan test procedures in appendix U to subpart B of 10 CFR part 430 and represented values in 10 CFR part 429; and (16) updating the reference to AMCA 230–15 to reference the version that includes the 2021 errata sheet. DOE has determined that the amended test procedure will not be unduly burdensome for manufacturers to conduct.

DOE estimates that some ceiling fan manufacturers would experience a cost from the test procedure amendments, due to retesting specific LSSD ceiling fans at low speed. Additionally, DOE estimates that some ceiling fan manufacturers would experience a cost savings from the test procedure amendment regarding the stability criteria for average air velocity measurements by not having to purchase sensors.

As stated previously, DOE identified 10 potential domestic small businesses selling approximately 325 unique LSSD ceiling fans with more than three speed settings. DOE previously estimated that approximately 10 percent of LSSD ceiling fan models with more than three speed settings would be required to re-test their models using the amended definition for low-speed. Therefore, DOE estimates that approximately 33 ceiling fan models sold by domestic small businesses would need to be re-tested due to this test procedure amendment. DOE previously estimated that it costs manufacturers approximately $1,500 for a third-party lab to conduct this test. Therefore, DOE estimates that all domestic small businesses would incur approximately $49,500 to re-test certain LSSD ceiling fans to the new low-speed definition. DOE estimates that the annual revenue of these 10 potential domestic small businesses that sell at least one LSSD ceiling fan with more than three speed settings range from approximately $1.7 million to over $250 million, with a median value of approximately $36 million.

Additionally, as stated in the previous section, DOE identified four potential domestic small businesses selling 16 HSBD ceiling fan models.

DOE estimates that the test procedure for belt-driven ceiling fans would cost manufacturers approximately $6,330 per basic model to test in accordance with this test procedure. Therefore, DOE estimates that domestic small businesses would incur a one-time cost of approximately $101,280 to conduct testing for the expanded scope of belt-driven ceiling fan. DOE estimates that the annual revenue of these four potential domestic small businesses that sell at least one HSBD ceiling fan range from approximately $79,000 to $16 million.

DOE presents the estimated testing costs and annual revenue for each potential small business manufacturer of belt-driven fans in Table IV.1.

TABLE IV.1—TESTING COSTS FOR SMALL BUSINESSES MANUFACTURING BELT-DRIVEN FANS

Company	Number of belt-driven ceiling fan models	Estimated testing cost	Estimated annual revenue	Testing costs as a percent of annual revenue
Small Business 1	9	$56,970	$16,000,000	0.3
Small Business 2	5	31,650	79,000	36.3
Small Business 3	1	6,330	1,500,000	0.4
Small Business 4	1	6,330	97,000	6.5

5. Duplication, Overlap, and Conflict With Other Rules and Regulations

DOE is not aware of any rules or regulations that duplicate, overlap, or conflict with this final rule.

6. Significant Alternatives to the Rule

As previously stated in this section, DOE is required to review existing DOE test procedures for all covered products every 7 years. Additionally, DOE shall amend test procedures with respect to any covered product, if the Secretary determines that amended test procedures would more accurately produce test results which measure energy efficiency, energy use, or estimated annual operating cost of a covered product during a representative average use cycle or period of use. (42 U.S.C. 6293(b)(1)(A)) DOE has determined that the test procedure amendments for ceiling fans would more accurately produce test results to measure the energy efficiency of ceiling fans.

While DOE recognizes that requiring ceiling fan manufacturers to retest specific LSSD ceiling fans at low speed, and expanding the scope to HSBD ceiling fans would cause manufacturers to re-test or test some ceiling fan models, the costs to re-test and test these models are inexpensive for most ceiling fan manufacturers. DOE has tentatively determined that there are no better alternatives than the amended test procedures, in terms of both meeting the agency's objectives to accurately measure energy efficiency and reduce burden on manufacturers. Therefore, DOE is amending the existing DOE test procedure for ceiling fans, as established in this final rule.

Additional compliance flexibilities may be available through other means. EPCA provides that a manufacturer whose annual gross revenue from all of its operations does not exceed $8 million for the 12-month period preceding the date of the application may apply for an exemption from all or part of an energy conservation standard for a period not longer than 24 months after the effective date of a final rule establishing the standard. (42 U.S.C. 6295(t)) Additionally, manufacturers subject to DOE's energy efficiency standards may apply to DOE's Office of Hearings and Appeals for exception relief under certain circumstances. Manufacturers should refer to 10 CFR

part 430, subpart E, and 10 CFR part 1003 for additional details on these additional compliance flexibilities.

C. Review Under the Paperwork Reduction Act of 1995

Manufacturers of ceiling fans must certify to DOE that their products comply with any applicable energy conservation standards. To certify compliance, manufacturers must first obtain test data for their products according to the DOE test procedures, including any amendments adopted for those test procedures. DOE has established regulations for the certification and recordkeeping requirements for all covered consumer products and commercial equipment, including ceiling fans. (*See generally* 10 CFR part 429.) The collection-of-information requirement for the certification and recordkeeping is subject to review and approval by OMB under the Paperwork Reduction Act (''PRA''). This requirement has been approved by OMB under OMB control number 1910–1400. Public reporting burden for the certification is estimated to average 35 hours per response, including the time for reviewing instructions, searching existing data sources, gathering and maintaining the data needed, certifying compliance, and completing and reviewing the collection of information.

Notwithstanding any other provision of the law, no person is required to respond to, nor shall any person be subject to a penalty for failure to comply with, a collection of information subject to the requirements of the PRA, unless that collection of information displays a currently valid OMB Control Number.

D. Review Under the National Environmental Policy Act of 1969

In this final rule, DOE establishes test procedure amendments that it expects will be used to develop and implement future energy conservation standards for ceiling fans. DOE has determined that this rule falls into a class of actions that are categorically excluded from review under the National Environmental Policy Act of 1969 (42 U.S.C. 4321 *et seq.*) and DOE's implementing regulations at 10 CFR part 1021. Specifically, DOE has determined that adopting test procedures for measuring energy efficiency of consumer products and industrial equipment is consistent with activities identified in 10 CFR part 1021, appendix A to subpart D, A5 and A6. Accordingly, neither an environmental assessment nor an environmental impact statement is required.

E. Review Under Executive Order 13132

Executive Order 13132, ''Federalism,'' 64 FR 43255 (August 4, 1999), imposes certain requirements on agencies formulating and implementing policies or regulations that preempt State law or that have federalism implications. The Executive order requires agencies to examine the constitutional and statutory authority supporting any action that would limit the policymaking discretion of the States and to carefully assess the necessity for such actions. The Executive order also requires agencies to have an accountable process to ensure meaningful and timely input by State and local officials in the development of regulatory policies that have Federalism implications. On March 14, 2000, DOE published a statement of policy describing the intergovernmental consultation process it will follow in the development of such regulations. 65 FR 13735. DOE examined this final rule and determined that it will not have a substantial direct effect on the States, on the relationship between the national government and the States, or on the distribution of power and responsibilities among the various levels of government. EPCA governs and prescribes Federal preemption of State regulations as to energy conservation for the products that are the subject of this final rule. States can petition DOE for exemption from such preemption to the extent, and based on criteria, set forth in EPCA. (42 U.S.C. 6297(d)) No further action is required by Executive Order 13132.

F. Review Under Executive Order 12988

Regarding the review of existing regulations and the promulgation of new regulations, section 3(a) of Executive Order 12988, ''Civil Justice Reform,'' 61 FR 4729 (Feb. 7, 1996), imposes on Federal agencies the general duty to adhere to the following requirements: (1) eliminate drafting errors and ambiguity; (2) write regulations to minimize litigation; (3) provide a clear legal standard for affected conduct rather than a general standard; and (4) promote simplification and burden reduction. Section 3(b) of Executive Order 12988 specifically requires that executive agencies make every reasonable effort to ensure that the regulation (1) clearly specifies the preemptive effect, if any; (2) clearly specifies any effect on existing Federal law or regulation; (3) provides a clear legal standard for affected conduct while promoting simplification and burden reduction; (4) specifies the retroactive effect, if any; (5) adequately defines key terms; and (6) addresses other important issues affecting clarity and general draftsmanship under any guidelines issued by the Attorney General. Section 3(c) of Executive Order 12988 requires Executive agencies to review regulations in light of applicable standards in sections 3(a) and 3(b) to determine whether they are met or it is unreasonable to meet one or more of them. DOE has completed the required review and determined that, to the extent permitted by law, this final rule meets the relevant standards of Executive Order 12988.

G. Review Under the Unfunded Mandates Reform Act of 1995

Title II of the Unfunded Mandates Reform Act of 1995 (''UMRA'') requires each Federal agency to assess the effects of Federal regulatory actions on State, local, and Tribal governments and the private sector. Public Law 104–4, sec. 201 (codified at 2 U.S.C. 1531). For a regulatory action resulting in a rule that may cause the expenditure by State, local, and Tribal governments, in the aggregate, or by the private sector of $100 million or more in any one year (adjusted annually for inflation), section 202 of UMRA requires a Federal agency to publish a written statement that estimates the resulting costs, benefits, and other effects on the national economy. (2 U.S.C. 1532(a), (b)) The UMRA also requires a Federal agency to develop an effective process to permit timely input by elected officers of State, local, and Tribal governments on a proposed ''significant intergovernmental mandate,'' and requires an agency plan for giving notice and opportunity for timely input to potentially affected small governments before establishing any requirements that might significantly or uniquely affect small governments. On March 18, 1997, DOE published a statement of policy on its process for intergovernmental consultation under UMRA. 62 FR 12820; also available at *www.energy.gov/gc/office-general-counsel.* DOE examined this final rule according to UMRA and its statement of policy and determined that the rule contains neither an intergovernmental mandate, nor a mandate that may result in the expenditure of $100 million or more in any year, so these requirements do not apply.

H. Review Under the Treasury and General Government Appropriations Act, 1999

Section 654 of the Treasury and General Government Appropriations Act, 1999 (Pub. L. 105–277) requires Federal agencies to issue a Family Policymaking Assessment for any rule

that may affect family well-being. This final rule will not have any impact on the autonomy or integrity of the family as an institution. Accordingly, DOE has concluded that it is not necessary to prepare a Family Policymaking Assessment.

I. Review Under Executive Order 12630

DOE has determined, under Executive Order 12630, ''Governmental Actions and Interference with Constitutionally Protected Property Rights'' 53 FR 8859 (March 18, 1988), that this regulation will not result in any takings that might require compensation under the Fifth Amendment to the U.S. Constitution.

J. Review Under Treasury and General Government Appropriations Act, 2001

Section 515 of the Treasury and General Government Appropriations Act, 2001 (44 U.S.C. 3516 note) provides for agencies to review most disseminations of information to the public under guidelines established by each agency pursuant to general guidelines issued by OMB. OMB's guidelines were published at 67 FR 8452 (Feb. 22, 2002), and DOE's guidelines were published at 67 FR 62446 (Oct. 7, 2002). Pursuant to OMB Memorandum M–19–15, Improving Implementation of the Information Quality Act (April 24, 2019), DOE published updated guidelines which are available at *www.energy.gov/sites/prod/files/2019/12/f70/DOE%20Final%20Updated%20IQA%20Guidelines%20Dec%202019.pdf.* DOE has reviewed this final rule under the OMB and DOE guidelines and has concluded that it is consistent with applicable policies in those guidelines.

K. Review Under Executive Order 13211

Executive Order 13211, ''Actions Concerning Regulations That Significantly Affect Energy Supply, Distribution, or Use,'' 66 FR 28355 (May 22, 2001), requires Federal agencies to prepare and submit to OMB, a Statement of Energy Effects for any significant energy action. A ''significant energy action'' is defined as any action by an agency that promulgated or is expected to lead to promulgation of a final rule, and that (1) is a significant regulatory action under Executive Order 12866, or any successor order; and (2) is likely to have a significant adverse effect on the supply, distribution, or use of energy; or (3) is designated by the Administrator of OIRA as a significant energy action. For any significant energy action, the agency must give a detailed statement of any adverse effects on energy supply, distribution, or use if the regulation is implemented, and of reasonable alternatives to the action and their expected benefits on energy supply, distribution, and use.

This regulatory action is not a significant regulatory action under Executive Order 12866. Moreover, it would not have a significant adverse effect on the supply, distribution, or use of energy, nor has it been designated as a significant energy action by the Administrator of OIRA. Therefore, it is not a significant energy action, and, accordingly, DOE has not prepared a Statement of Energy Effects.

L. Review Under Section 32 of the Federal Energy Administration Act of 1974

Under section 301 of the Department of Energy Organization Act (Pub. L. 95–91; 42 U.S.C. 7101), DOE must comply with section 32 of the Federal Energy Administration Act of 1974, as amended by the Federal Energy Administration Authorization Act of 1977. (15 U.S.C. 788; ''FEAA'') Section 32 essentially provides in relevant part that, where a proposed rule authorizes or requires use of commercial standards, the notice of proposed rulemaking must inform the public of the use and background of such standards. In addition, section 32(c) requires DOE to consult with the Attorney General and the Chairman of the Federal Trade Commission (''FTC'') concerning the impact of the commercial or industry standards on competition.

The modifications to the test procedure for ceiling fans adopted in this final rule incorporate testing methods contained in certain sections of the following commercial standards: ANSI/AMCA Standard 230–15 (''AMCA 230–15''), ''Laboratory Methods of Testing Air Circulating Fans for Rating and Certification, Includes Errata (2021).'' DOE has evaluated this standard and is unable to conclude whether it fully complies with the requirements of section 32(b) of the FEAA (*i.e.,* whether it was developed in a manner that fully provides for public participation, comment, and review.) DOE has consulted with both the Attorney General and the Chairman of the FTC about the impact on competition of using the methods contained in these standards and has received no comments objecting to their use.

M. Congressional Notification

As required by 5 U.S.C. 801, DOE will report to Congress on the promulgation of this rule before its effective date. The report will state that it has been determined that the rule is not a ''major rule'' as defined by 5 U.S.C. 804(2).

N. Description of Materials Incorporated by Reference

The Director of the Federal Register previously approved AMCA 208–18 for incorporation by reference into appendix U to subpart B: The procedure defines the fan energy index (''FEI''), outlines the calculations necessary to obtain it, and discusses the test conditions and configurations it applies to.

In this final rule, DOE incorporates by reference the following standards:

AMCA 230–15, ''Laboratory Methods of Testing Air Circulating Fans for Rating and Certification'', including AMCA 230–15 Technical Errata 2021–05–05, ''Technical Errata Sheet for ANSI/AMCA Standard 230–15: Density Corrections'', dated May 5, 2021. AMCA 230–15 is an industry-accepted test procedure for measuring the airflow efficiency of commercial and industrial ceiling fans.

IEC 62301, Household electrical appliances—Measurement of standby power, (Edition 2.0, 2011–01). The procedure provides a basis for standby-mode testing.

The AMCA standards are available from Air Movement and Control Association International, Inc. (AMCA), 30 West University Drive, Arlington Heights, IL 60004, (847) 394–0150, or by going to *www.amca.org/store.*

The IEC standard is available from International Electrotechnical Commission (IEC), 3 Rue de Varembe, Case Postale 131, 1211 Geneva 20, Switzerland, *https://webstore.iec.ch/* and from the American National Standards Institute (ANSI), 25 W. 43rd Street, 4th Floor, New York, NY 10036, (212) 642–4900, *https://webstore.ansi.org.*

V. Approval of the Office of the Secretary

The Secretary of Energy has approved publication of this final rule.

List of Subjects

10 CFR Part 429

Administrative practice and procedure, Confidential business information, Energy conservation, Household appliances, Imports, Intergovernmental relations, Reporting and recordkeeping requirements, Small businesses.

10 CFR Part 430

Administrative practice and procedure, Confidential business information, Energy conservation, Household appliances, Imports, Incorporation by reference,

Intergovernmental relations, Small businesses.

Signing Authority

This document of the Department of Energy was signed on August 2, 2022, by Kelly J. Speakes-Backman, Principal Deputy Assistant Secretary for Energy Efficiency and Renewable Energy, pursuant to delegated authority from the Secretary of Energy. That document with the original signature and date is maintained by DOE. For administrative purposes only, and in compliance with requirements of the Office of the Federal Register, the undersigned DOE **Federal Register** Liaison Officer has been authorized to sign and submit the document in electronic format for publication, as an official document of the Department of Energy. This administrative process in no way alters the legal effect of this document upon publication in the **Federal Register**.

Signed in Washington, DC, on August 3, 2022.

Treena V. Garrett,

Federal Register Liaison Officer, U.S. Department of Energy.

For the reasons stated in the preamble, DOE amends parts 429 and 430 of chapter II of title 10, Code of Federal Regulations as set forth below:

PART 429—CERTIFICATION, COMPLIANCE, AND ENFORCEMENT FOR CONSUMER PRODUCTS AND COMMERCIAL AND INDUSTRIAL EQUIPMENT

■ 1. The authority citation for part 429 continues to read as follows:

Authority: 42 U.S.C. 6291–6317; 28 U.S.C. 2461 note.

■ 2. Section 429.32 is amended by:

■ a. Revising the paragraph (a)(2) introductory text and paragraph (a)(2)(ii)(B); and

■ b. Adding paragraphs (a)(3) and (4);

The revisions and additions read as follows:

§ 429.32 Ceiling fans.

(a) * * *

(2) For each basic model of ceiling fan, a sample of sufficient size must be randomly selected and tested to ensure that—

* * * * *

(ii) * * *

(B) The upper 95 percent confidence limit (UCL) of the true mean divided by 1.1, where:

$$UCL = \bar{x} + t_{0.95}\left(\frac{s}{\sqrt{n}}\right)$$

And $\bar{x}$ is the sample mean; s is the sample standard deviation; n is the number of samples; and $t_{0.95}$ is the t statistic for a 95% one-tailed confidence interval with n–1 degrees of freedom (from appendix A to this subpart); and

(3) For each basic model of ceiling fan,

(i) Any represented value of blade span, as defined in section 1.4 of appendix U to subpart B of part 430, is the mean of the blade spans measured for the sample selected as described in paragraph (a)(1) of this section, rounded to the nearest inch;

(ii) Any represented value of blade revolutions per minute (RPM) is the mean of the blade RPM measurements measured for the sample selected as described in paragraph (a)(1) of this section, rounded to the nearest RPM;

(iii) Any represented value of blade edge thickness is the mean of the blade edge thicknesses measured for the sample selected as described in paragraph (a)(1) of this section, rounded to the nearest 0.01 inch;

(iv) Any represented value of the distance between the ceiling and the lowest point on the fan blades is the mean of the distances measured for the sample selected as described in paragraph (a)(1) of this section, rounded to the nearest quarter of an inch;

(v) Any represented value of tip speed is pi multiplied by represented value of blade span divided by twelve multiplied by the represented value of RPM, rounded to the nearest foot per minute; and

(vi) Any represented value of airflow (CFM) at high speed, including the value used to determine whether a ceiling fan is a highly-decorative ceiling fan as defined in section 1.10 of appendix U to subpart B of part 430, is determined pursuant to paragraph (a)(2)(i) and rounded to the nearest CFM.

(4) To determine representative values of airflow, energy use, and estimated yearly energy cost of an LSSD or VSD ceiling fan basic model, use the following provisions.

(i) Airflow. Determine the represented value for airflow by calculating the weighted-average airflow of an LSSD or VSD ceiling fan basic model at low and high fan speed as follows:

$$CFM_{ave} = \frac{CFM_{Low} \times 3.0 + CFM_{High} \times 3.4}{6.4}$$

Where:

CFM_{ave} = represented value of ceiling fan airflow, rounded to the nearest CFM.

CFM_{Low} = represented value of measured airflow, in cubic feet per minute, at low fan speed, pursuant to paragraph (a)(2)(i) of this section.

CFM_{High} = represented value of measured airflow, in cubic feet per minute, at high fan speed, pursuant to paragraph (a)(2)(i) of this section.

3.0 = average daily operating hours at low fan speed, pursuant to Table 3 in appendix U to subpart B of part 430.

3.4 = average daily operating hours at high fan speed, pursuant to Table 3 in appendix U to subpart B of part 430.

6.4 = total average daily operating hours.

(ii) Energy Use. Determine represented value for energy use by calculating the weighted-average power consumption of an LSSD or VSD ceiling fan basic model at low and high fan speed as follows:

$$W_{ave} = \frac{W_{Low} \times 3.0 + W_{High} \times 3.4 + W_{Sb} \times 17.6}{6.4}$$

Where:

W_{ave} = represented value power consumption, rounded to the nearest watt,

W_{Low} = represented value of measured power consumption, in watts, at low fan speed, pursuant to paragraph (a)(2)(ii) of this section.

W_{High} = represented value of measured power consumption, in watts, at high fan speed, pursuant to paragraph (a)(2)(ii) of this section.

W_{Sb} = represented value of measured power consumption, in watts, in standby mode, pursuant to paragraph (a)(2)(ii) of this section.

3.0 = average daily operating hours at low fan speed, pursuant to Table 3 in appendix U to subpart B of part 430.

3.4 = average daily operating hours at high fan speed, pursuant to Table 3 in appendix U to subpart B of part 430.

17.6 = average daily standby mode hours, pursuant to Table 3 in appendix U to subpart B of part 430.

6.4 = total average daily operating hours.

(iii) Estimated Yearly Energy Cost. Determine the represented value for estimated yearly energy cost of an LSSD or VSD ceiling fan basic model at low and high fan speed as follows:

$$EYEC = \frac{W_{Low} \times 3.0 + W_{High} \times 3.4 + W_{Sb} \times 17.6}{1000} \times 365 \times C_{KWH}$$

Where:

EYEC = represented value for estimated yearly energy cost, rounded to the nearest dollar,

W_{Low} = represented value of measured power consumption, in watts, at low fan speed, pursuant to paragraph (a)(2)(ii) of this section.

W_{High} = represented value of measured power consumption, in watts, at high fan speed, pursuant to paragraph (a)(2)(ii) of this section.

W_{Sb} = represented value of measured power consumption, in watts, in standby mode, pursuant to paragraph (a)(2)(ii) of this section.

C_{KWH} = representative average unit cost of electrical energy in dollars per kilowatt-hour pursuant to 16 CFR part 305.

3.0 = average daily operating hours at low fan speed, pursuant to Table 3 in appendix U to subpart B of part 430

3.4 = average daily operating hours at high fan speed, pursuant to Table 3 in appendix U to subpart B of part 430.

17.6 = average daily standby mode hours, pursuant to Table 3 in appendix U to subpart B of part 430.

365 = number of days per year.

1000 = conversion factor from watts to kilowatts.

* * * * *

■ 3. Section 429.134 is amended by adding paragraph (t) to read as follows:

§ 429.134 Product-specific enforcement provisions.

* * * * *

(t) *Ceiling Fans*—(1) *Verification of blade span.* DOE will measure the blade span and round the measurement pursuant to the test requirements of 10 CFR part 430 of this chapter for each unit tested. DOE will consider the represented blade span valid only if the rounded measurement(s) (either the rounded measured value for a single unit, or the mean of the rounded measured values for a multiple unit sample, rounded to the nearest inch) is the same as the represented blade span.

(i) If DOE determines that the represented blade span is valid, that blade span will be used as the basis for determining the product class and calculating the minimum allowable ceiling fan efficiency.

(ii) If DOE determines that the represented blade span is invalid, DOE will use the rounded measured blade span(s) as the basis for determining the product class, and calculating the minimum allowable ceiling fan efficiency.

(2) *Verification of the distance between the ceiling and lowest point of fan blades.* DOE will measure the distance between the ceiling and lowest point of the fan blades and round the measurement pursuant to the test requirements of 10 CFR part 430 of this chapter for each unit tested. DOE will consider the represented distance valid only if the rounded measurement(s) (either the measured value for a single unit, or the mean of the measured values for a multiple unit sample, rounded to the nearest quarter inch) are the same as the represented distance.

(i) If DOE determines that the represented distance is valid, that distance will be used as the basis for determining the product class.

(ii) If DOE determines that the represented distance is invalid, DOE will use the rounded measured distance(s) as the basis for determining the product class.

(3) *Verification of blade revolutions per minute (RPM) measured at high speed.* DOE will measure the blade RPM at high speed pursuant to the test requirements of 10 CFR part 430 of this chapter for each unit tested. DOE will consider the represented blade RPM measured at high speed valid only if the measurement(s) (either the measured value for a single unit, or the mean of the measured values for a multiple unit sample, rounded to the nearest RPM) are within 2 percent of the represented blade RPM at high speed.

(i) If DOE determines that the represented RPM is valid, that RPM will be used as the basis for determining the product class.

(ii) If DOE determines that the represented RPM is invalid, DOE will use the rounded measured RPM(s) as the basis for determining the product class.

(4) *Verification of blade edge thickness.* DOE will measure the blade edge thickness and round the measurement pursuant to the test requirements of 10 CFR part 430 for each unit tested. DOE will consider the represented blade edge thickness valid only if the measurement(s) (either the measured value for a single unit, or the mean of the measured values for a multiple unit sample, rounded to the nearest 0.01 inch) are the same as the represented blade edge thickness.

(i) If DOE determines that the represented blade edge thickness is valid, that blade edge thickness will be used for determining product class.

(ii) If DOE determines that the represented blade edge thickness is invalid, DOE will use the rounded measured blade edge thickness(es) as the basis for determining the product class.

PART 430—ENERGY CONSERVATION PROGRAM FOR CONSUMER PRODUCTS

■ 4. The authority citation for part 430 continues to read as follows:

Authority: 42 U.S.C. 6291–6309; 28 U.S.C. 2461 note.

■ 5. Section 430.2 is amended by revising the definition of ''Ceiling fan'' to read as follows:

§ 430.2 Definitions.

* * * * *

Ceiling fan means a nonportable device that is suspended from a ceiling for circulating air via the rotation of fan blades. For the purpose of this definition:

(1) Circulating air means the discharge of air in an upward or downward direction. A ceiling fan that has a ratio of fan blade span (in inches)

to maximum rotation rate (in revolutions per minute) greater than 0.06 provides circulating air.

(2) For all other ceiling fan related definitions, see appendix U to this subpart.

* * * * *

■ 6. Section 430.3 is amended by:
■ a. Revising paragraph (b)(4);
■ b. Adding paragraph (b)(5);
■ c. Revising the introductory text to paragraph (p);
■ d. In paragraph (p)(6), adding the text ''U,'' immediately before the text ''X,'';
■ e. Removing and reserving paragraph (p)(8); and
■ f. Adding note 1 to paragraph (p).

The revisions and additions read as follows:

§ 430.3 Materials incorporated by reference.

(b) * * *

(4) ANSI/AMCA Standard 230–15 (''AMCA 230–15''), *Laboratory Methods of Testing Air Circulating Fans for Rating and Certification,* ANSI-approved October 16, 2015; IBR approved for appendix U of subpart B.

(5) AMCA 230–15 Technical Errata 2021–05–05 (''AMCA 260–15 TE), *Technical Errata Sheet for ANSI/AMCA Standard 230–15: Density Corrections,* dated May 5, 2021; IBR approved for appendix U of subpart B.

* * * * *

(p) *IEC.* International Electrotechnical Commission, 3 Rue de Varembe, Case Postale 131, 1211 Geneva 20, Switzerland; *https://webstore.iec.ch/.*

* * * * *

Note 2 to paragraph (p). The standards referenced in paragraphs (p)(1) through (9) are also available from ANSI. See paragraph (e) of this section.

■ 7. Section 430.23 is amended by revising paragraph (w) to read as follows:

§ 430.23 Test procedures for the measurement of energy and water consumption.

* * * * *

(w) *Ceiling fans.* Measure the following attributes of a single ceiling fan in accordance with appendix U to this subpart: airflow; power consumption; ceiling fan efficiency, as applicable; ceiling fan energy index (CFEI), as applicable; standby power, as applicable; distance between the ceiling and lowest point of fan blades; blade span; blade edge thickness; and blade revolutions per minute (RPM).

* * * * *

■ 8. Appendix U to subpart B of part 430 is amended by:
■ a. Removing the introductory text and adding, in its place, a note to the appendix;
■ b. Adding section 0;
■ c. Revising sections 1.4, and 1.8 through 1.20;
■ d. Adding sections 1.21;
■ e. Revising section 2;
■ f. Revising the introductory text to section 3, and sections 3.2.2(1), 3.2.2(4), 3.2.2(6), 3.2.3, 3.3.1(3), 3.3.1(4), 3.3.1(5), 3.3.1(6), 3.3.1(8), and 3.3.2;
■ g. Adding section 3.3.3;
■ h. Revising sections 3.4, 3.5, 3.5.1, and 3.6.;
■ i. Revising sections 4 and 5; and
■ j. Removing the text ''IEC 62301–U'' and adding, in its place, the text ''IEC 62301'', wherever it appears.

The revisions and additions read as follows:

Appendix U to Subpart B of Part 430—Uniform Test Method for Measuring the Energy Consumption of Ceiling Fans

Note: Prior to February 13, 2023, manufacturers must make any representations with respect to the energy use or efficiency of ceiling fans as specified in section 2 of this appendix as it appeared on January 23, 2017. On or after February 13, 2023, manufacturers of ceiling fans, as specified in section 2 of this appendix, must make any representations with respect to energy use or efficiency in accordance with the results of testing pursuant to this appendix. Representations of standby power consumption for large-diameter ceiling fans including for the purpose of certification, are not required until such time as compliance is required with an energy conservation standard for standby power consumption. Upon the compliance date(s) of any energy conservation standards for large-diameter ceiling fans with a blade span greater than 24 feet, use of the applicable provisions of this test procedure to demonstrate compliance with the energy conservation standard will also be required.

0. Incorporation by Reference

In § 430.3, DOE incorporated by reference the entire standard for AMCA 208–18, AMCA 230–15, AMCA 230–15 TE, and IEC 62301; however, only enumerated provisions of AMCA 230–15, AMCA 230–15 TE, and IEC 62301 are applicable as follows:

0.1 AMCA 230–15 (including corresponding sections in AMCA 230–15 TE):

(a) Section 3—Units of Measurement, as specified in section 3.4 of this appendix;

(b) Section 4—Symbols and Subscripts; (including Table 1—Symbols and Subscripts), as specified in section 3.4 of this appendix;

(c) Section 5—Definitions (except 5.1), as specified in section 3.4 of this appendix;

(d) Section 6—Instruments and Section Methods of Measurement, as specified in section 3.4 of this appendix;

(e) Section 7—Equipment and Setups (except the last 2 bulleted items in 7.1—Allowable test setups), as specified in section 3.4 of this appendix;

(f) Section 8—Observations and Conduct of Test, as specified in section 3.5 of this appendix;

(g) Section 9—Calculations (except 9.5 and 9.6), as specified in section 3.5 of this appendix; and

(h) Test Figure 1—Vertical Airflow Setup with Load Cell (Ceiling Fans), as specified in section 3.4 of this appendix.

0.2 IEC 62301:

(a) Section 4.3.1—Supply voltage and frequency (first paragraph only), as specified in section 3.6 of this appendix;

(b) Section 4.3.2—Supply voltage waveform, as specified in section 3.6 of this appendix;

(c) Section 4.4—General conditions for measurements: Power measuring instruments, as specified in section 3.6 of this appendix;

(d) Section 5.3.1—General (except the last bulleted item), as specified in section 3.6 of this appendix and

(e) Section 5.3.2—Sampling method (first two paragraphs and Note 1), as specified in sections 3.6 and 3.6.3 of this appendix.

* * * * *

1.4. *Blade span* means the diameter of the largest circle swept by any part of the fan blade assembly, including attachments. The represented value of blade span (D) is as determined in 10 CFR 429.32.

* * * * *

1.8. *High-speed small-diameter (HSSD) ceiling fan* means a small-diameter ceiling fan that is not a very-small-diameter ceiling fan, highly-decorative ceiling fan or belt-driven ceiling fan and that has a represented value of blade edge thickness, as determined in 10 CFR 429.32(a)(3)(iii), of less than 3.2 mm or a maximum represented value of tip speed, as determined in 10 CFR 429.32(a)(3)(v), greater than the applicable limit specified in the table in this definition.

HIGH-SPEED SMALL-DIAMETER CEILING FAN BLADE AND TIP SPEED CRITERIA

Airflow direction	Thickness (t) of edges of blades		Tip speed threshold	
	Mm	Inch	m/s	feet per minute
Downward-only	4.8 > t ≥ 3.2	3/16 > t ≥ 1/8	16.3	3,200
Downward-only	t ≥ 4.8	t ≥ 3/16	20.3	4,000
Reversible	4.8 > t ≥ 3.2	3/16 > t ≥ 1/8	12.2	2,400

HIGH-SPEED SMALL-DIAMETER CEILING FAN BLADE AND TIP SPEED CRITERIA—Continued

Airflow direction	Thickness (t) of edges of blades		Tip speed threshold	
	Mm	Inch	m/s	feet per minute
Reversible	t ≥ 4.8	t ≥ 3/16	16.3	3,200

1.9. *High-speed belt-driven (HSBD) ceiling fan* means a ceiling fan that is a belt-driven ceiling fan with one fan head, and that has a represented value of blade edge thickness, as determined in 10 CFR 429.32(a)(3)(iii), of less than 3.2 mm or a maximum represented value of tip speed, as determined in 10 CFR 429.32(a)(3)(v), greater than the applicable limit specified in the table in this definition.

HIGH-SPEED BELT-DRIVEN CEILING FAN BLADE AND TIP SPEED CRITERIA

Airflow direction	Thickness (t) of edges of blades		Tip speed threshold	
	Mm	Inch	m/s	feet per minute
Downward-only	4.8 > t ≥ 3.2	3/16 > t ≥ 1/8	16.3	3,200
Downward-only	t ≥ 4.8	t ≥ 3/16	20.3	4,000
Reversible	4.8 > t ≥ 3.2	3/16 > t ≥ 1/8	12.2	2,400
Reversible	t ≥ 4.8	t ≥ 3/16	16.3	3,200

1.10. *Highly-decorative ceiling fan* means a ceiling fan with a maximum represented value of blade revolutions per minute (RPM), as determined in 10 CFR 429.32(a)(3)(ii), of 90 RPM, and a represented value of airflow at high speed, as determined in 10 CFR 429.32(a)(3)(vi), of less than 1,840 CFM.

1.11. *Hugger ceiling fan* means a low-speed small-diameter ceiling fan that is not a very-small-diameter ceiling fan, highly-decorative ceiling fan, or belt-driven ceiling fan, and for which the represented value of the distance between the ceiling and the lowest point on the fan blades, as determined in 10 CFR 429.32(a)(3)(iv), is less than or equal to 10 inches.

1.12. *Large-diameter ceiling fan* means a ceiling fan that is not a highly-decorative ceiling fan or belt-driven ceiling fan and has a represented value of blade span, as determined in 10 CFR 429.32(a)(3)(i), greater than seven feet.

1.13. *Low speed* means the lowest available speed that meets the following criteria:

Number of sensors per individual axis as determined in section 3.2.2(6) of this appendix	Number of sensors per individual axis measuring 40 feet per minute or greater
3	2
4	3
5	3
6	4
7	4
8	5
9	6
10	7
11	8
12	9

1.14. *Low-speed small-diameter (LSSD) ceiling fan* means a small-diameter ceiling fan that has a represented value of blade edge thickness, as determined in 10 CFR 429.32(a)(3)(iii), greater than or equal to 3.2 mm and a maximum represented value of tip speed, as determined in 10 CFR 429.32(a)(3)(v), less than or equal to the applicable limit specified in the table in this definition.

LOW-SPEED SMALL-DIAMETER CEILING FAN BLADE AND TIP SPEED CRITERIA

Airflow direction	Thickness (t) of edges of blades		Tip speed threshold	
	Mm	Inch	m/s	feet per minute
Reversible	4.8 > t ≥ 3.2	3/16 > t ≥ 1/8	12.2	2,400
Reversible	t ≥ 4.8	t ≥ 3/16	16.3	3,200

1.15. *Multi-head ceiling fan* means a ceiling fan with more than one fan head, *i.e.,* more than one set of rotating fan blades.

1.16. *Multi-mount ceiling fan* means a low-speed small-diameter ceiling fan that can be mounted in the configurations associated with both the standard and hugger ceiling fans.

1.17. *Oscillating ceiling fan* means a ceiling fan containing one or more fan heads for which the axis of rotation of the fan blades cannot remain in a fixed position relative to the ceiling. Such fans have no inherent means by which to disable the oscillating function separate from the fan blade rotation.

1.18. *Small-diameter ceiling fan* means a ceiling fan that has a represented value of blade span, as determined in 10 CFR 429.32(a)(3)(i), less than or equal to seven feet.

1.19. *Standard ceiling fan* means a low-speed small-diameter ceiling fan that is not a very-small-diameter ceiling fan, highly-decorative ceiling fan or belt-driven ceiling fan, and for which the represented value of the distance between the ceiling and the lowest point on the fan blades, as determined in 10 CFR 429.32(a)(3)(iv), is greater than 10 inches.

1.20. *Total airflow* means the sum of the product of airflow and hours of operation at all tested speeds. For multi-head fans, this includes the airflow from all fan heads.

1.21. *Very-small-diameter (VSD) ceiling fan* means a small-diameter ceiling fan that is not a highly-decorative ceiling fan or belt-driven ceiling fan; and has one or more fan heads, each of which has a represented value of blade span, as determined in 10 CFR 429.32(a)(3)(i), of 18 inches or less. Only VSD fans that also meet the definition of an LSSD fan are required to be tested for purposes of determining compliance with energy efficiency standards established by DOE and for other representations of energy efficiency.

2. Scope:

The provisions in this appendix apply to ceiling fans except:

(1) Ceiling fans where the plane of rotation of a ceiling fan's blades is not less than or equal to 45 degrees from horizontal, or cannot be adjusted based on the manufacturer's specifications to be less than or equal to 45 degrees from horizontal;

(2) Centrifugal ceiling fans;

(3) Belt-driven ceiling fans that are not high-speed belt-driven ceiling fans; and

(4) Oscillating ceiling fans.

3. *General Instructions, Test Apparatus, and Test Measurement:*

The test apparatus and test measurement used to determine energy performance

depend on the ceiling fan's blade span, and in some cases the ceiling fan's blade edge thickness. For each tested ceiling fan, measure the lateral distance from the center of the axis of rotation of the fan blades to the furthest fan blade edge from the center of the axis of rotation. Measure this lateral distance at the resolution of the measurement instrument, using an instrument with a measurement resolution of least 0.25 inches. Multiply the lateral distance by two and then round to the nearest whole inch to determine the blade span. For ceiling fans having a blade span greater than 18 inches and less than or equal to 84 inches, measure the ceiling fan's blade edge thickness. To measure the fan blade edge thickness, use an instrument with a measurement resolution of at least 0.001 inch and measure the thickness of one fan blade's leading edge (in the forward direction) according to the following:

(1) Locate the cross-section perpendicular to the fan blade's radial length that is at least one inch from the tip of the fan blade and for which the blade is thinnest, and

(2) Measure at the thickest point of that cross-section within one inch from the leading edge of the fan blade.

See Figure 1 of this appendix for an instructional schematic on the fan blade edge thickness measurement. Figure 1 depicts a ceiling fan from above. Round the measured blade edge thickness to the nearest 0.01 inch.

BILLING CODE 6450–01–P

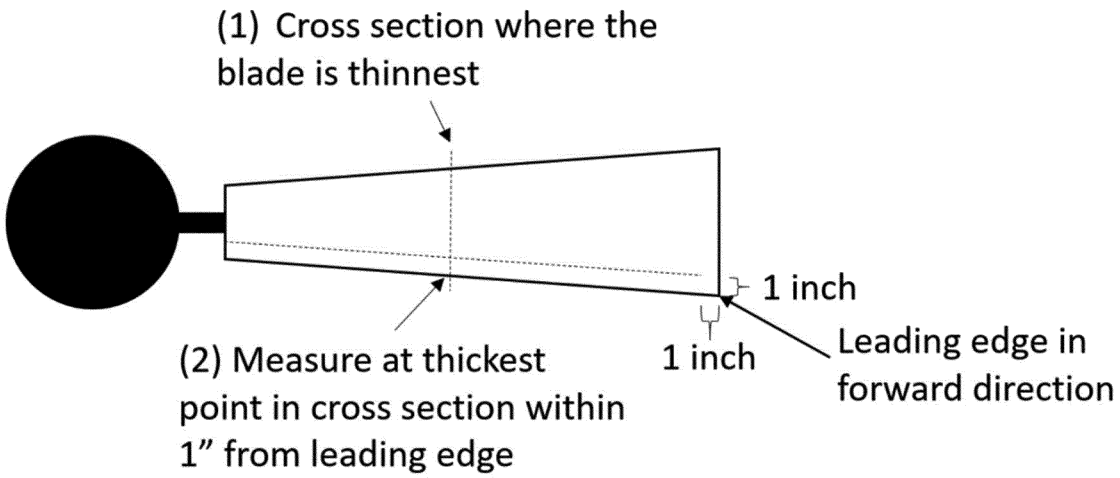

Figure 1 to Appendix U to Subpart B of Part 430: Measurement Criteria for Fan Blade Edge Thickness

* * * * *

3.2.2. *Equipment Set-up.*

(1) Make sure the transformer power is off. Hang the ceiling fan to be tested directly from the ceiling, according to the manufacturer's installation instructions. Hang all non-multi-mount ceiling fans in the fan configuration that minimizes the distance between the ceiling and the lowest point of the fan blades. Hang and test multi-mount fans in two configurations: The configuration associated the definition of a standard fan that minimizes the distance between the ceiling and the lowest point of the fan blades and the configuration associated with the definition of a hugger fan that minimizes the distance between the ceiling and the lowest point of the fan blades. For all tested configurations, measure the distance between the ceiling and the lowest point of the fan blade using an instrument with a measurement resolution of at least 0.25 inches. Round the measured distance from the ceiling to the lowest point of the fan blade to the nearest quarter inch.

* * * * *

(4) A single rotating sensor arm, two rotating sensor arms, or four fixed sensor arms can be used to take air velocity measurements along four axes, labeled A–D. Axes A, B, C, and D are at 0, 90, 180, and 270 degree positions. Axes A–D must be perpendicular to the four walls of the room. See Figure 2 of this appendix.

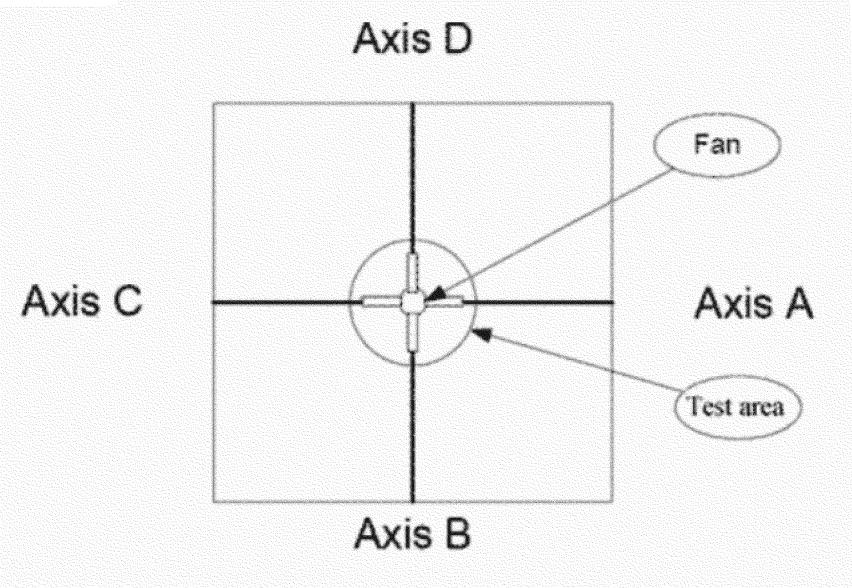

Figure 2 to Appendix U to Subpart B of Part 430: Testing Room and Sensor Arm Axes

* * * * *

(6) Place the sensors at intervals of 4 ± 0.0625 inches along a sensor arm, starting with the first sensor at the point where the four axes intersect, aligning the sensors perpendicular to the direction of airflow. Do not touch the actual sensor prior to testing. Use enough sensors to record air delivery within a circle 8 inches larger in diameter than the blade span of the ceiling fan being tested. The experimental set-up is shown in Figure 3 of this appendix.

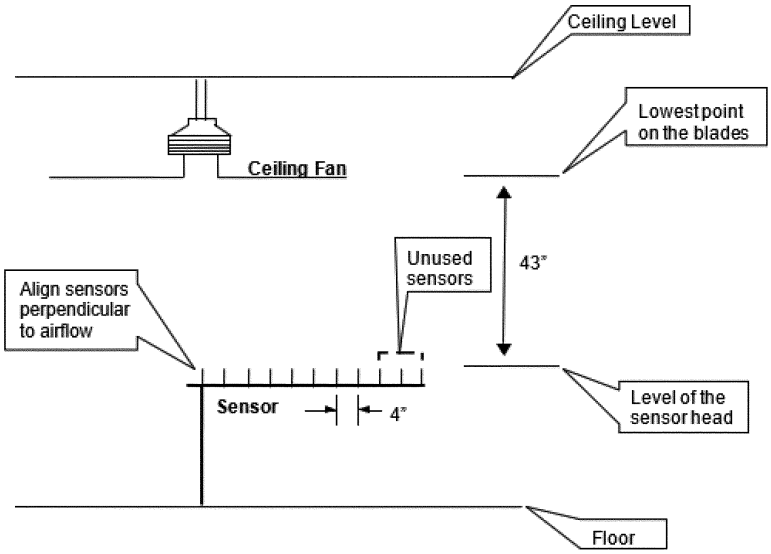

Figure 3 to Appendix U to Subpart B of Part 430: Air Delivery Room Set-Up for Small-Diameter Ceiling Fans other than High-Speed Belt-Driven Ceiling Fans

BILLING CODE 6450–01–C

* * * * *

3.2.3. *Multi-Head Ceiling Fan Test Set-Up.* Hang a multi-headed ceiling fan from the ceiling such that one of the ceiling fan heads is centered directly over sensor 1 (*i.e.,* at the intersection of axes A, B, C, and D). The distance between the lowest point any of the fan blades of the centered fan head can reach and the air velocity sensors is to be such that it is the same as for all other small-diameter ceiling fans (*see* Figure 3 of this appendix). If the multi-head ceiling fan has an oscillating function (*i.e.,* the fan heads change their axis of rotation relative to the ceiling) that can be switched off, switch it off prior to taking air velocity measurements. If any multi-head fan does not come with the blades preinstalled, install fan blades only on the fan head that will be directly centered over the intersection of the sensor axes. (Even if the fan heads in a multi-head ceiling fan would typically oscillate when the blades are

installed on all fan heads, the ceiling fan is subject to this test procedure if the centered fan head does not oscillate when it is the only fan head with the blades installed.) If the fan blades are preinstalled on all fan heads, measure air velocity in accordance with section 3.3 of this appendix except turn on only the centered fan head. Take the power consumption measurements separately, with the fan blades installed on all fan heads and with any oscillating function, if present, switched on.

* * * * *

3.3.1 *Test conditions to be followed when testing:*

* * * * *

(3) If present, any additional accessories or features sold with the ceiling fan that do not relate to the ceiling fan's ability to create airflow by rotation of the fan blades (for example light kit, heater, air ionization, ultraviolet technology) is to be installed but turned off during testing. If such an accessory or feature cannot be turned off, it shall be set to the lowest energy-consuming mode during testing. If the ceiling fan is offered with a default controller, test using the default controller. If multiple controllers are offered, test using the minimally functional controller.

(4) If present, turn off any oscillating function causing the axis of rotation of the fan head(s) to change relative to the ceiling during operation prior to taking air velocity measurements. Turn on any oscillating function prior to taking power measurements.

(5) Test ceiling fans rated for operation with only a single- or multi-phase power supply with single- or multi-phase electricity, respectively. Test ceiling fans capable of operating with single- and multi-phase electricity with single-phase electricity. DOE will allow manufacturers of ceiling fans capable of operating with single- and multi-phase electricity to test such fans with single-phase power and make representations of efficiency associated with both single and multi-phase electricity if a manufacturer desires to do so, but the test results in the multi-phase configuration will not be valid to assess compliance with any amended energy conservation standard. All tested power supply should be at 60 Hz.

(6) The supply voltage shall be:

(i) for ceiling fans tested with single-phase electricity, the supply voltage shall be:

(a) 120 V if the ceiling fan's minimum rated voltage is 120 V or the lowest rated voltage range contains 120 V,

(b) 240 V if the ceiling fan's minimum rated voltage is 240 V or the lowest rated voltage range contains 240 V, or

(c) The ceiling fan's minimum rated voltage (if a voltage range is not given) or the mean of the lowest rated voltage range, in all other cases.

(ii) for ceiling fans tested with multi-phase electricity, the supply voltage shall be:

(a) 240 V if the ceiling fan's minimum rated voltage is 240 V or the lowest rated voltage range contains 240 V, or

(b) The ceiling fan's minimum rated voltage (if a voltage range is not given) or the mean of the lowest rated voltage range, in all other cases.

(iii) The test voltage shall not vary by more than ±1% during the tests.

* * * * *

(8) Measure power input at a point that includes all power-consuming components of the ceiling fan (but without any attached light kit energized; or without any additional accessory or feature energized, if possible; and if not, with the additional accessory or feature set at the lowest energy-consuming mode). If the ceiling fan is offered with a default controller, test using the default controller. If multiple controllers are offered, test using the minimally functional controller.

* * * * *

3.3.2 *Air Velocity and Power Consumption Testing Procedure:*

Measure the air velocity (FPM) and power consumption (W) for HSSD ceiling fans until stable measurements are achieved, measuring at high speed only. Measure the air velocity and power consumption for LSSD and VSD ceiling fans that also meet the definition of an LSSD fan until stable measurements are achieved, measuring first at low speed and then at high speed. To determine low speed, start measurements at the lowest available speed and move to the next highest speed until the low speed definition in section 1.13 of this appendix is met. Air velocity and power consumption measurements are considered stable for high speed if:

(1) The average air velocity for each sensor varies by less than 5 percent or 2 FPM, whichever is greater, compared to the average air velocity measured for that same sensor in a successive set of air velocity measurements, and

(2) Average power consumption varies by less than 1 percent in a successive set of power consumption measurements.

(a) Air velocity and power consumption measurements are considered stable for low speed if:

(1) The average air velocity for each sensor varies by less than 10 percent or 2 FPM, whichever is greater, compared to the average air velocity measured for that same sensor in a successive set of air velocity measurements, and

(2) Average power consumption varies by less than 1 percent in a successive set of power consumption measurements.

(b) These stability criteria are applied differently to ceiling fans with airflow not directly downward. *See* section 3.3.3 of this appendix.

Step 1: Set the first sensor arm (if using four fixed arms), two sensor arm (if using a two-arm rotating setup), or single sensor arm (if using a single-arm rotating setup) to the 0 degree Position (Axis A). If necessary, use a marking as reference. If using a single-arm rotating setup or two-arm rotating setup, adjust the sensor arm alignment until it is at the 0 degree position by remotely controlling the antenna rotator.

Step 2: Set software up to read and record air velocity, expressed in feet per minute (FPM) in 1 second intervals. (Temperature does not need to be recorded in 1 second intervals.) Record current barometric pressure.

Step 3: Allow test fan to run 15 minutes at rated voltage and at high speed if the ceiling fan is an HSSD ceiling fan. If the ceiling fan is an LSSD or VSD ceiling fan that also meets the definition of an LSSD fan, allow the test fan to run 15 minutes at the rated voltage and at the lowest available ceiling fan speed. Turn off all forced-air environmental conditioning equipment entering the chamber (*e.g.,* air conditioning), close all doors and vents, and wait an additional 3 minutes prior to starting test session.

Step 4a: For a rotating sensor arm: Begin recording readings. Starting with Axis A, take 100 air velocity readings (100 seconds run-time) and record these data. For all fans except multi-head fans and fans capable of oscillating, also measure power during the interval that air velocity measurements are taken. Record the average value of the air velocity readings for each sensor in feet per minute (FPM). Determine if the readings meet the low speed definition as defined in section 1.13 of this appendix. If not, restart Step 4a at the next highest speed until the low-speed definition is met. Once the low speed definition is met, rotate the arm, stabilize the arm, and allow 30 seconds to allow the arm to stop oscillating. Repeat data recording and rotation process for Axes B, C, and D. Step 4a is complete when the readings for all axes meet the low speed definition at the same speed. Save the data for all axes only for those measurements that meet the low speed definition. Using the measurements applicable to low speed, record the average value of the power measurement in watts (W) (400 readings). Record the average value of the air velocity readings for each sensor in feet per minute (FPM) (400 readings).

Step 4b: For a two-arm rotating setup: Begin recording readings. Starting with Axes A and C, take 100 air velocity readings (100 seconds run-time) for both axes and record these data. For all fans except multi-head fans and fans capable of oscillating, also measure power during the interval that air velocity measurements are taken. Record the average value of the air velocity readings for each sensor in feet per minute (FPM). Determine if the readings meet the low speed definition as defined in section 1.13 of this appendix. If not, restart Step 4b at the next highest speed until the low speed definition is met. Once the low speed definition is met, rotate the two-arm, stabilize the arm, and allow 30 seconds to allow the arm to stop oscillating. Repeat data recording for Axes B and D. Step 4b is complete when the readings for all axes meet the low speed definition at the same speed. Save the data for all axes only for those measurements that meet the low speed definition. Using the measurements applicable to low speed, record the average value of the power measurement in watts (W) (200 readings). Record the average value of the air velocity readings for each sensor in feet per minute (FPM) (200 readings).

Step 4c: For four fixed sensor arms: Begin recording readings. Take 100 air velocity readings (100 seconds run-time) and record this data. Take the readings for all sensor arms (Axes A, B, C, and D) simultaneously. For all fans except multi-head fans and fans capable of oscillating, also measure power

during the interval that air velocity measurements are taken. Record the average value of the air velocity readings for each sensor in feet per minute (FPM). Determine if the readings meet the low speed definition as defined in section 1.13 of this appendix. If not, restart Step 4c at the next highest speed until the low speed definition is met. Step 4c is complete when the readings for all axes meet the low speed definition at the same speed. Save the data for all axes only for those measurements that meet the low speed definition. Using the measurements applicable to low speed, record the average value of the power measurement in watts (W) (100 readings). Record the average value of the air velocity readings for each sensor in feet per minute (FPM) (100 readings).

Step 5: Repeat step 4a, 4b or 4c until stable measurements are achieved.

Step 6: Repeat steps 1 through 5 above on high speed for LSSD and VSD ceiling fans that also meet the definition of an LSSD fan. Note: Ensure that temperature and humidity readings are maintained within the required tolerances for the duration of the test (all tested speeds). Forced-air environmental conditioning equipment may be used and doors and vents may be opened between test sessions to maintain environmental conditions.

Step 7: If testing a multi-mount ceiling fan, repeat steps 1 through 6 with the ceiling fan in the ceiling fan configuration (associated with either hugger or standard ceiling fans) not already tested.

If a multi-head ceiling fan includes more than one category of ceiling fan head, then test at least one of each unique category. A fan head with different construction that could affect air movement or power consumption, such as housing, blade pitch, or motor, would constitute a different category of fan head.

Step 8: For multi-head ceiling fans, measure active (real) power consumption in all phases simultaneously at each speed continuously for 100 seconds with all fan heads turned on, and record the average value at each speed in watts (W).

For ceiling fans with an oscillating function, measure active (real) power consumption in all phases simultaneously at each speed continuously for 100 seconds with the oscillating function turned on. Record the average value of the power measurement in watts (W).

For both multi-head ceiling fans and fans with an oscillating function, repeat power consumption measurement until stable power measurements are achieved.

3.3.3 *Air Velocity Measurements for Ceiling Fans with Airflow Not Directly Downward:*

Using the number of sensors that cover the same diameter as if the airflow were directly downward, record air velocity at each speed from the same number of continuous sensors with the largest air velocity measurements. This continuous set of sensors must be along the axis that the ceiling fan tilt is directed in (and along the axis that is 180 degrees from the first axis). For example, a 42-inch fan tilted toward axis A may create the pattern of air velocity shown in Figure 4 of this appendix. As shown in Table 1 of this appendix, a 42-inch fan would normally require 7 active sensors per axis. However, because the fan is not directed downward, all sensors must record data. In this case, because the set of sensors corresponding to maximum air velocity are centered 3 sensor positions away from the sensor 1 along the A axis, substitute the air velocity at A axis sensor 4 for the average air velocity at sensor 1. Take the average of the air velocity at A axis sensors 3 and 5 as a substitute for the average air velocity at sensor 2, take the average of the air velocity at A axis sensors 2 and 6 as a substitute for the average air velocity at sensor 3, etc. Lastly, take the average of the air velocities at A axis sensor 10 and C axis sensor 4 as a substitute for the average air velocity at sensor 7. Stability criteria apply after these substitutions. For example, air velocity stability at sensor 7 are determined based on the average of average air velocity at A axis sensor 10 and C axis sensor 4 in successive measurements. Any air velocity measurements made along the B–D axis are not included in the calculation of average air velocity.

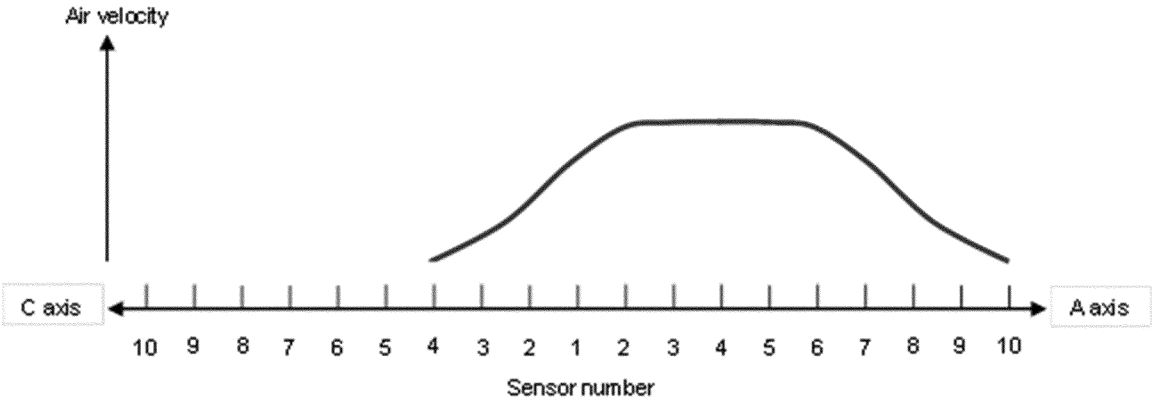

Figure 4 to Appendix U to Subpart B of Part 430: Example Air Velocity Pattern for Airflow Not Directly Downward

3.4 *Test apparatus for large-diameter ceiling fans and high-speed belt-driven ceiling fans:*

The test apparatus and instructions for testing large-diameter ceiling fans and HSBD ceiling fans must conform to the requirements specified in Sections 3 through 7 (including Test Figure 1) of AMCA 230–15, with the following modifications:

3.4.1. A ''ceiling fan'' is defined as in 10 CFR 430.2.

3.4.2. Test ceiling fans rated for operation with only a single- or multi-phase power supply with single- or multi-phase electricity, respectively. Test ceiling fans capable of operating with single- and multi-phase electricity with multi-phase electricity. DOE will allow manufacturers of ceiling fans capable of operating with single- and multi-phase electricity to test such fans with single-phase power and make representations of efficiency associated with both single and multi-phase electricity if a manufacturer desires to do so, but the test results in the single-phase configuration will not be valid to assess compliance with any amended energy conservation standard. All tested power supply should be at 60 Hz.

3.4.3. Supply Voltage:

(1) For ceiling fans tested with single-phase electricity, the supply voltage shall be:

(a) 120 V if the ceiling fan's minimum rated voltage is 120 V or the lowest rated voltage range contains 120 V,

(b) 240 V if the ceiling fan's minimum rated voltage is 240 V or the lowest rated voltage range contains 240 V, or

(c) The ceiling fan's minimum rated voltage (if a voltage range is not given) or the mean of the lowest rated voltage range, in all other cases.

(2) For ceiling fans tested with multi-phase electricity, the supply voltage shall be:

(a) 240 V if the ceiling fan's minimum rated voltage is 240 V or the lowest rated voltage range contains 240 V, or

(b) The ceiling fan's minimum rated voltage (if a voltage range is not given) or the mean of the lowest rated voltage range, in all other cases.

3.5 *Active mode test measurement for large-diameter ceiling fans and high-speed belt-driven ceiling fans:*

(1) Test large-diameter ceiling fans and high-speed belt-driven ceiling fans in accordance with AMCA 208–18, in all phases simultaneously at:

(a) High speed, and

(b) 40 percent or the nearest speed that is not less than 40 percent speed.

(2) When testing at 40 percent speed for large-diameter ceiling fans that can operate over an infinite number of speeds (*e.g.,* ceiling fans with VFDs), ensure the average measured RPM is within the greater of 1 percent of the average RPM at high speed or 1 RPM. For example, if the average measured RPM at high speed is 50 RPM, for testing at 40 percent speed, the average measured RPM should be between 19 RPM and 21 RPM. If the average measured RPM falls outside of this tolerance, adjust the ceiling fan speed and repeat the test. Calculate the airflow and measure the active (real) power consumption in all phases simultaneously in accordance with the test requirements specified in Sections 8 and 9, AMCA 230–15, with the following modifications:

3.5.1 Measure active (real) power consumption in all phases simultaneously at a point that includes all power-consuming components of the ceiling fan. If present, any additional accessories or features sold with the ceiling fan that do not relate to the ceiling fan's ability to create airflow by rotation of the fan blades (for example light kit, heater, air ionization, ultraviolet technology) are to be installed but turned off during testing. If the accessory/feature cannot be turned off, it shall be set to the lowest energy-consuming mode during testing. If the ceiling fan is offered with a default controller, test using the default controller. If multiple controllers are offered, test using the minimally functional controller.

* * * * *

3.6 Test measurement for standby power consumption.

(1) Measure standby power consumption if the ceiling fan offers one or more of the following user-oriented or protective functions:

(a) The ability to facilitate the activation or deactivation of other functions (including active mode) by remote switch (including remote control), internal sensor, or timer.

(b) Continuous functions, including information or status displays (including clocks), or sensor-based functions.

(2) Measure standby power consumption after completion of active mode testing and after the active mode functionality has been switched off (*i.e.,* the rotation of the ceiling fan blades is no longer energized). The ceiling fan must remain connected to the main power supply and be in the same configuration as in active mode (*i.e.,* any ceiling fan light fixture should still be attached). Measure standby power consumption according to Sections 4.3.1, 4.3.2, 4.4, and 5.3.1 through 5.3.2, of IEC 62301 with the following modifications:

* * * * *

4. Calculation of Ceiling Fan Efficiency From the Test Results:

4.1 Calculation of effective area for small-diameter ceiling fans other than high-speed belt-driven ceiling fans:

Calculate the effective area corresponding to each sensor used in the test method for small-diameter ceiling fans other than high-speed belt-driven ceiling fans (section 3.3 of this appendix) with the following equations:

(1) For sensor 1, the sensor located directly underneath the center of the ceiling fan, the effective width of the circle is 2 inches, and the effective area is:

$$\textit{Effective Area}\ (sq.ft.) = \pi\left(\frac{2}{12}\right)^2 = 0.0873 \qquad \textbf{Eq. 1}$$

(2) For the sensors between sensor 1 and the last sensor used in the measurement, the effective area has a width of 4 inches. If a sensor is a distance *d,* in inches, from sensor 1, then the effective area is:

$$\textit{Effective Area}\ (sq.ft.) = \pi\left(\frac{d+1}{12}\right)^2 - \pi\left(\frac{d-2}{12}\right)^2 = \pi\left(\frac{24+1}{12}\right)^2 - \pi\left(\frac{24-2}{12}\right)^2 = 3.076 \qquad \textbf{Eq. 3}$$

(3) For the last sensor, the width of the effective area depends on the horizontal displacement between the last sensor and the point on the ceiling fan blades furthest radially from the center of the fan. The total area included in an airflow calculation is the area of a circle 8 inches larger in diameter than the ceiling fan blade span (as specified in section 3 of this appendix).

Therefore, for example, for a 42-inch ceiling fan, the last sensor is 3 inches beyond the end of the ceiling fan blades. Because only the area within 4 inches of the end of the ceiling fan blades is included in the airflow calculation, the effective width of the circle corresponding to the last sensor would be 3 inches. The calculation for the effective area corresponding to the last sensor would then be:

$$\textit{Effective Area}\ (sq.ft.) = \pi\left(\frac{d+1}{12}\right)^2 - \pi\left(\frac{d-2}{12}\right)^2 = \pi\left(\frac{24+1}{12}\right)^2 - \pi\left(\frac{24-2}{12}\right)^2 = 3.076 \qquad \textbf{Eq. 3}$$

For a 46-inch ceiling fan, the effective area of the last sensor would have a width of 5 inches, and the effective area would be:

$$\textit{Effective Area}\ (sq.ft.) = \pi\left(\frac{d+3}{12}\right)^2 - \pi\left(\frac{d-2}{12}\right)^2 = \pi\left(\frac{24+3}{12}\right)^2 - \pi\left(\frac{24-2}{12}\right)^2 = 5.345 \qquad \textbf{Eq. 4}$$

4.2 Calculation of airflow and efficiency for small-diameter ceiling fans other than high-speed belt-driven ceiling fans:

Calculate fan airflow using the overall average of both sets of air velocity measurements at each sensor position from the successive sets of measurements that meet the stability criteria from section 3.3 of this appendix. To calculate airflow for HSSD, LSSD, and VSD ceiling fans, multiply the overall average air velocity at each sensor position from section 3.3 (for high speed for HSSD, LSSD, and VSD ceiling fans that also meet the definition of an LSSD ceiling fan; and repeated for low speed only for LSSD and VSD ceiling fans that also meet the definition of an LSSD ceiling fan) by that sensor's effective area (see section 4.1 of this appendix), and then sum the products to obtain the overall calculated airflow at the tested speed.

For each speed, using the overall calculated airflow and the overall average power consumption measurements from the successive sets of measurements as follows:

$$Ceiling\ Fan\ Efficiency\ (CFM/W) = \frac{\sum_i (CFM_i \times OH_i)}{W_{Sb} \times OH_{Sb} + \sum_i (W_i \times OH_i)} \qquad \textbf{Eq. 5}$$

Where:

CFM_i = airflow at speed *i,*

OH_i = operating hours at speed *i,* as specified in Table 2 of this appendix,

W_i = power consumption at speed *i,*

OH_{Sb} = operating hours in standby mode, as specified in Table 2 of this appendix, and

W_{Sb} = power consumption in standby mode.

Calculate two ceiling fan efficiencies for multi-mount ceiling fans: One efficiency corresponds to the ceiling fan mounted in the configuration associated with the definition of a hugger ceiling fan, and the other efficiency corresponds to the ceiling fan mounted in the configuration associated with the definition of a standard ceiling fan.

TABLE 2 TO APPENDIX U TO SUBPART B OF PART 430: DAILY OPERATING HOURS FOR CALCULATING CEILING FAN EFFICIENCY

	No standby	With standby
Daily Operating Hours for LSSD and VSD* Ceiling Fans		
High Speed	3.4	3.4
Low Speed	3.0	3.0
Standby Mode	0.0	17.6
Off Mode	17.6	0.0
Daily Operating Hours for HSSD Ceiling Fans		
High Speed	12.0	12.0
Standby Mode	0.0	12.0
Off Mode	12.0	0.0

* These values apply only to VSD fans that also meet the definition of an LSSD fan.

4.3 Calculation of airflow and efficiency for multi-head ceiling fans:

Calculate airflow for each fan head using the method described in section 4.2 of this appendix. To calculate overall airflow at a given speed for a multi-head ceiling fan, sum the airflow for each fan head included in the ceiling fan (a single airflow can be applied to each of the identical fan heads, but at least one of each unique fan head must be tested). The power consumption is the measured power consumption with all fan heads on. Using the airflow as described in this section, and power consumption measurements from section 3.3 of this appendix, calculate ceiling fan efficiency for a multi-head ceiling fan as follows:

$$Ceiling\ Fan\ Efficiency\ (CFM/W) = \frac{\sum_i (CFM_i \times OH_i)}{W_{Sb} \times OH_{Sb} + \sum_i (W_i \times OH_i)} \qquad \textbf{Eq. 6}$$

Where:

CFM_i = sum of airflows for each head at speed i,

OH_i = operating hours at speed i as specified in Table 2 of this appendix,

W_i = power consumption at speed i,

OH_{Sb} = operating hours in standby mode as specified in Table 2 of this appendix, and

W_{Sb} = power consumption in standby mode.

5. *Calculation of Ceiling Fan Energy Index (CFEI) From the Test Results for Large Diameter Ceiling Fan and High-Speed Belt-Driven Ceiling Fans:*

Calculate CFEI, which is the FEI for large-diameter ceiling fans and high-speed belt-driven ceiling fans, at the speeds specified in section 3.5 of this appendix according to AMCA 208–18, with the following modifications:

(1) Using an Airflow Constant (Q_0) of 26,500 cubic feet per minute;

(2) Using a Pressure Constant (P_0) of 0.0027 inches water gauge; and

(3) Using a Fan Efficiency Constant (η_0) of 42 percent.

[FR Doc. 2022–16951 Filed 8–15–22; 8:45 am]

BILLING CODE 6450–01–P